MoPar

PASSENGER CAR PARTS CATALOG
"S" SERIES
1962

PLYMOUTH
VALIANT
DODGE
LANCER
CHRYSLER
IMPERIAL

MoPar

SEPTEMBER 1961

Pages	
INF-1	General Information
PK-1	Parts Packages
PT-1	Police - Taxi
1-1	Group 1 Accessories
2-1	Group 2 Front Suspension
3-1	Group 3 Axle - Rear
4-1	Group 4 Brake - Parking
5-1	Group 5 Brake - Service
6-1	Group 6 Clutch
7-1	Group 7 Cooling
8-1	Group 8 Electrical
9-1	Group 9 Engine
10-1	Group 10 Engine Oiling
11-1	Group 11 Exhaust
12-1	Group 12 Fenders and Sheet Metal
13-1	Group 13 Frame
14-1	Group 14 Fuel
15-1	Group 15 Hood
16-1	Group 16 Prop. Shaft & Univ. Jt.
17-1	Group 17 Springs
18-1	Group 18 Standard Parts
19-1	Group 19 Steering
21-1	Group 21 Transmission
22-1	Group 22 Wheels
23-1	Group 23 Body
IT-1	Group 23 Interior Trim
24-1	Air Conditioning
AL-1	Alphabetical Index
NU-1	Numerical Index
X-1	Vendor Cross Reference

CHRYSLER MOTORS CORPORATION
MOPAR PARTS AND ACCESSORIES
DETROIT 31, MICHIGAN

81-690-0290
Printed in U.S.A.

MyMopar.com

INDEX TO INFORMATION PAGES

	Page No.
Abbreviations	INF-11
Engine Identification	INF-14
Engine Numbers	INF-14
Interfiling Revision Pages	INF-10
Locating Parts	INF-11
Model Designation	INF- 4
Model Specifications Plymouth Valiant Dodge Lancer Chrysler Imperial	INF- 6
Ordering Information	INF-15
Part Type Code System	INF-13
Revision Service to Parts Catalog	INF-10
Serial Number Designation	INF- 5
Specifying Information	INF-11
Standard Parts	INF-11
Symbols Used In Parts Catalog	INF-10
Vehicle Serial Numbers	INF-13

MyMopar.com

1962 PASSENGER CAR MODEL DESIGNATION

The following information will acquaint you with the model code system being used with the 1962 series vehicles.

The year is identified by the letter "S" for 1962.

Each car make is identified by the letters P for Plymouth, V - Valiant, D - Dodge, L - Lancer, C - Chrysler, and Y for the Imperial.

The various chassis for each make are identified by the numbers 1, 2 and 3. On the Plymouth No. 1 represents a 6 cylinder chassis and No. 2 an 8 cylinder chassis. On the Valiant No. 1 represents a 6 cylinder chassis. On the Lancer No. 1 represents a 6 cylinder chassis. On the Dart No. 1 represents a 6 cylinder chassis and No. 2 an 8 cylinder chassis. On the Chrysler and Imperial the numbers 1, 2 and 3 indicate one of the various 8 cylinder chassis built.

The last letter in the model code indicates the price class in which the particular model falls, as shown below.

L - Low price class (Savoy, Valiant V100, Lancer 170, Dart, Newport, Imperial Custom)

M - Medium price class (Belvedere, Dart 330, Chrysler 300, Imperial Crown)

H - High price class (Fury, Valiant V200, Dart 440, Lancer 770, New Yorker, Imperial LeBaron)

P - Premium price class (Lancer-G.T., Valiant Signet 200 and Dodge Polara)

Example:

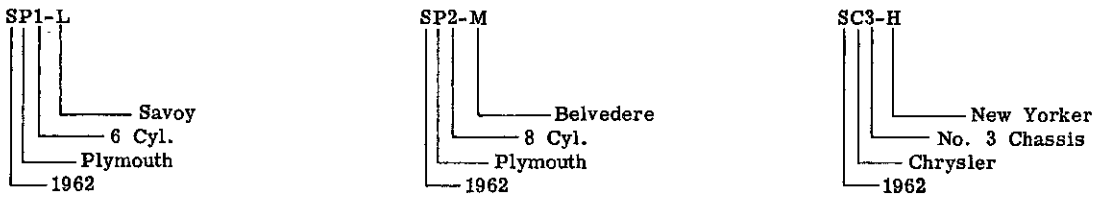

A glance at the model designation will enable you to identify a model by year, make of car, number of cylinders and price class.

MyMopar.com

1962 PASSENGER CAR SERIAL NUMBER DESIGNATION

The new serial number coding system will be uniform for all car assembly plants. The code breakdown is as follows:

The serial number will consist of a ten (10) digit numeric sequence number.

The 1st digit is the numeric identification for car line used in the uniform body codes.

1. Valiant 6 Cyl.
2. Plymouth 6 Cyl.
3. Plymouth 8 Cyl.
4. Dodge 6 Cyl.
5. Dodge 8 Cyl.
6. Dodge Custom 880
7. Lancer
8. Chrysler
9. Imperial

The 2nd digit is the model series identification.

1. Savoy, Valiant V100, Lancer 170, Dart, Custom 880, Newport, Imperial Custom
2. Belvedere, Dart 330, Imperial Crown, 300
3. Fury, Valiant V200, Lancer 770, Dart 440, New Yorker, Imperial LeBaron
4. 300, Polara, Lancer G.T., Valiant Signet 200, Fury Sport
5. Suburban, Savoy, Valiant V100, Lancer 170, Dart, Newport
6. Suburban, Belvedere, Dart 330
7. Suburban, Valiant V200, Fury, Lancer 770, Dart 440, New Yorker
8. Taxi
9. Police
0. Fleet

The third digit (2 - indicates 1962 models)

The fourth digit will be a numeric designation for producing plant.

1. Plymouth Plant - Detroit
2. Dodge Plant - Detroit
3. Jefferson Plant - Detroit
5. Los Angeles Plant - Calif.
6. Newark Plant - Del.
7. St. Louis Plant - Valley Park, Mo.

The last six digits will consist of a six digit sequence number. The sequence numbers will begin with 100001 except Valiant and Lancer (Detroit Built) which will begin with 500001. Each model series for each car line will begin with sequence number 100001 or 500001.

MyMopar.com

1962 PLYMOUTH
Model Specifications

	1962 MODEL	1961 CODE	NO. CYL.	CAR SERIAL NO. FIRST	
SP1-L	SAVOY	RP1-L	6	DETROIT	2121-100001
				ST. LOUIS	2127-100001
				NEWARK	2126-100001
				LOS ANGELES	2125-100001
SP1-L	SAVOY SUBURBAN	RP1-L	6	DETROIT	2521-100001
				ST. LOUIS	2527-100001
				NEWARK	2526-100001
				LOS ANGELES	2525-100001
SP1-M	BELVEDERE	RP1-M	6	DETROIT	2221-100001
				ST. LOUIS	2227-100001
				NEWARK	2226-100001
				LOS ANGELES	2225-100001
SP1-M	BELVEDERE SUBURBAN	RP1-M	6	DETROIT	2621-100001
				ST. LOUIS	2627-100001
				NEWARK	2626-100001
				LOS ANGELES	2625-100001
SP1-H	FURY	RP1-H	6	DETROIT	2321-100001
				ST. LOUIS	2327-100001
				NEWARK	2326-100001
				LOS ANGELES	2325-100001
SP2-L	SAVOY	RP2-L	8	DETROIT	3121-100001
				ST. LOUIS	3127-100001
				NEWARK	3126-100001
				LOS ANGELES	3125-100001
SP2-L	SAVOY SUBURBAN	RP2-L	8	DETROIT	3521-100001
				ST. LOUIS	3527-100001
				NEWARK	3526-100001
				LOS ANGELES	3525-100001
SP2-M	BELVEDERE	RP2-M	8	DETROIT	3221-100001
				ST. LOUIS	3227-100001
				NEWARK	3226-100001
				LOS ANGELES	3225-100001
SP2-M	BELVEDERE SUBURBAN	RP2-M	8	DETROIT	3621-100001
				ST. LOUIS	3627-100001
				NEWARK	3626-100001
				LOS ANGELES	3625-100001
SP2-H	FURY	RP2-H	8	DETROIT	3321-100001
				ST. LOUIS	3327-100001
				NEWARK	3326-100001
				LOS ANGELES	3325-100001
SP2-H	FURY SUBURBAN	RP2-H	8	DETROIT	3721-100001
				ST. LOUIS	3727-100001
				NEWARK	3726-100001
				LOS ANGELES	3725-100001
SP2-P	FURY SPORT		8	DETROIT	3421-100001
				ST. LOUIS	3427-100001
				NEWARK	3426-100001
				LOS ANGELES	3425-100001

MyMopar.com

1962 VALIANT
Model Specifications

	1962 MODEL	1961 CODE	NO. CYL.	CAR SERIAL NO. FIRST	
SV1-L	VALIANT V100	RV1-L	6	DETROIT	1122-500001
				ST. LOUIS	1127-100001
				NEWARK	1126-100001
				LOS ANGELES	1125-100001
SV1-L	VALIANT SUBURBAN V100	RV1-L	6	DETROIT	1522-500001
				ST. LOUIS	1527-100001
				NEWARK	1526-100001
				LOS ANGELES	1525-100001
SV1-H	VALIANT V200	RV1-H	6	DETROIT	1322-500001
				ST. LOUIS	1327-100001
				NEWARK	1326-100001
				LOS ANGELES	1325-100001
SV1-H	VALIANT SUBURBAN V200	RV1-H	6	DETROIT	1722-500001
				ST. LOUIS	1727-100001
				NEWARK	1726-100001
				LOS ANGELES	1725-100001
SV1-P	VALIANT SIGNET 200	-	6	DETROIT	1422-500001
				ST. LOUIS	1427-100001
				NEWARK	1426-100001
				LOS ANGELES	1425-100001

1962 LANCER
Model Specifications

	1962 MODEL	1961 CODE	NO. CYL.	CAR SERIAL NO. FIRST	
SL1-L	LANCER 170	RW1-L	6	DETROIT	7122-500001
				ST. LOUIS	7127-100001
				NEWARK	7126-100001
				LOS ANGELES	7125-100001
SL1-L	LANCER SUBURBAN 170	RW1-L	6	DETROIT	7522-500001
				ST. LOUIS	7527-100001
				NEWARK	7526-100001
				LOS ANGELES	7525-100001
SL1-H	LANCER 770	RW1-H	6	DETROIT	7322-500001
				ST. LOUIS	7327-100001
				NEWARK	7326-100001
				LOS ANGELES	7325-100001
SL1-H	LANCER SUBURBAN 770	RW1-H	6	DETROIT	7722-500001
				ST. LOUIS	7727-100001
				NEWARK	7726-100001
				LOS ANGELES	7725-100001
SL1-P	LANCER GT	-	6	DETROIT	7422-500001
				ST. LOUIS	7427-100001
				NEWARK	7426-100001
				LOS ANGELES	7425-100001

MyMopar.com

1962 DODGE
Model Specifications

	1962 MODEL	1961 CODE	NO. CYL.	CAR SERIAL NO. FIRST	
SD1-L	DART	RD3-L	6	DETROIT	4122-100001
				ST. LOUIS	4127-100001
				NEWARK	4126-100001
				LOS ANGELES	4125-100001
SD1-L	DART SUBURBAN	RD3-L	6	DETROIT	4522-100001
				ST. LOUIS	4527-100001
				NEWARK	4526-100001
				LOS ANGELES	4525-100001
SD1-M	DART 330	RD3-M	6	DETROIT	4222-100001
				ST. LOUIS	4227-100001
				NEWARK	4226-100001
				LOS ANGELES	4225-100001
SD1-M	DART 330 SUBURBAN	RD3-M	6	DETROIT	4622-100001
				ST. LOUIS	4627-100001
				NEWARK	4626-100001
				LOS ANGELES	4625-100001
SD1-H	DART 440	RD3-H	6	DETROIT	4322-100001
				ST. LOUIS	4327-100001
				NEWARK	4326-100001
				LOS ANGELES	4325-100001
SD2-L	DART	RD4-L	8	DETROIT	5122-100001
				ST. LOUIS	5127-100001
				NEWARK	5126-100001
				LOS ANGELES	5125-100001
SD2-L	DART SUBURBAN	RD4-L	8	DETROIT	5522-100001
				ST. LOUIS	5527-100001
				NEWARK	5526-100001
				LOS ANGELES	5525-100001
SD2-M	DART 330	RD4-M	8	DETROIT	5222-100001
				ST. LOUIS	5227-100001
				NEWARK	5226-100001
				LOS ANGELES	5225-100001
SD2-M	DART 330 SUBURBAN	RD4-M	8	DETROIT	5622-100001
				ST. LOUIS	5627-100001
				NEWARK	5626-100001
				LOS ANGELES	5625-100001
SD2-H	DART 440	RD4-H	8	DETROIT	5322-100001
				ST. LOUIS	5327-100001
				NEWARK	5326-100001
				LOS ANGELES	5325-100001
SD2-H	DART 440 SUBURBAN		8	DETROIT	5722-100001
				ST. LOUIS	5727-100001
				NEWARK	5726-100001
				LOS ANGELES	5725-100001
SD2-P	POLARA 500	RD1-L	8	DETROIT	5422-100001
SD3-L	CUSTOM 880	-	8	DETROIT	6123-169564

MyMopar.com

1962 CHRYSLER
Model Specifications

	1962 MODEL	1961 CODE	NO. CYL.	CAR SERIAL NO. FIRST	
SC1-L	NEWPORT	RC1-L	8	DETROIT	8123-100001
SC1-L	NEWPORT SUBURBAN	RC1-L	8	DETROIT	8523-100001
SC2-M	300	RC2-M	8	DETROIT	8223-100001
SC2-H	300-H	RC4-P	8	DETROIT	8423-100001
SC3-H	NEW YORKER	RC3-H	8	DETROIT	8323-100001
SC3-H	NEW YORKER SUBURBAN	RC3-H	8	DETROIT	8723-100001

1962 IMPERIAL
Model Specifications

	1962 MODEL	1961 CODE	NO. CYL.	CAR SERIAL NO. FIRST	
SY1-L	IMPERIAL CUSTOM	RY1-L	8	DETROIT	9123-100001
SY1-M	IMPERIAL CROWN	RY1-M	8	DETROIT	9223-100001
SY1-H	IMPERIAL LE BARON	RY1-H	8	DETROIT	9323-100001

MyMopar.com

SYMBOLS USED IN THIS CATALOG

The following symbols are used in the Parts Catalog and revisions thereto:

* - An asterisk preceding a part number indicates a change or addition.

⊟ - A double box preceding a part number indicates parts which have been added and not previously published.

★ - A star symbol in the "Per Car" column means "use as required."

( ) - The numerals with parenthesis in the model column refer to notes at the bottom of the page. These notes have been used wherever necessary to further explain model application, serial number breaks, etc. Such notes are numbered and cross referenced to the item to which they apply.

PARTS CATALOG REVISION SERVICE

GENERAL

Subscribers to the MoPar Passenger Car Parts Catalog Revision Service will be provided with revision pages incorporating latest information. Proper interfiling of the revision pages will insure the subscriber a complete and up-to-date Parts Book.

Accompanying each mailing of a set of revision pages is a covering letter which outlines the contents of the particular revision: Group Name, Group Number, and Page Numbers being eliminated, replaced, or added to each revised group. It is advised that the letter be read carefully to avoid elimination of pages which are still current.

INTERFILING REVISION PAGES

The importance of prompt interfiling of revision pages upon receipt cannot be stressed too greatly.

The following method for interfiling revised and new pages has been found to be efficient and time saving and is recommended for your use:

1. Insert the revised pages loosely in their proper location in the catalog.
2. Pull the locking trigger and lift the transfer bar with all pages down to the first loose revision sheet which has been inserted in its proper location.
3. Compare the revised (loose) page with the superseded page, noting changes and date.

NOTE: If you use the revised pages as part of your parts record-keeping system, note the changes in the revised (loose) page and post accordingly.

4. Remove superseded page.
5. Place revised page on post of transfer bar.
6. Replace transfer bar with all pages in place on bottom post.
7. Re-lock cover and your catalog is current and accurate.

MyMopar.com

SPECIFYING INFORMATION

The following information is included in this Parts Catalog:

1. Part Type Code
2. Part Name
3. Part Number
4. Model Application
5. Quantity used per vehicle
6. Effective points of changes by vehicle serial number, engine number and body number.
7. Description and dimensions necessary for proper identification of parts.
8. Parts not previously listed in the Parts Catalog are designated by a double box (⊟) symbol preceding the part number.
9. Under the column No. Cyl. where no. of cylinders are not shown indicates part is for 6 and 8 cylinder. In the model column 3 conditions appear:
   A. Part Number
   B. Dashes
   C. Blank

   Part number applies only where it appears in the column of the model.

HOW TO LOCATE PARTS

The Parts Catalog is divided into Groups. A tab index is provided to separate the Groups. To locate a part by name, see Alphabetical Index. To locate a part by number, see Numerical Index.

In cases where only the location of the part on the vehicle is known, refer to Tab Index to locate the Group in which the part is located. Then refer to the illustrations which appear at the beginning of that Group for identification of the part by name and Part Type Code. Parts are listed in Part Type Code sequence within the Group and reference to the proper code will determine the part number.

STANDARD PARTS

Standard Parts such as bolts, nuts, etc., are listed under the major parts which they attach and are not coded. Standard Parts listed as Major Parts, such as fuses, bulbs, and bearings in the 100,000 part number series are assigned a Part Type Code and coded within the group in which they are listed.

A comprehensive listing of the most commonly used Standard Parts available in carton quantities will be found under Group 18.

ABBREVIATIONS

Abbreviations as used throughout this list are interpreted as follows:

abs.	absorber
accel.	accelerator
acc.	accessory
adj.	adjusting-or-able-ment
alum.	aluminum
amp.	ampere
approx.	approximate-or-ly
arm.	armature
assy.	assembly
as req.	as required
att.	attaching
AL	AutoLite
auto.	automatic
aux.	auxiliary
bal.	balance
brg.	bearing
B.E.	black enamel
brkt.	bracket
br.	brass
bz.	bronze
blt.	built
bush.	bushing
ca.	cadmium
Cal.	California
canc.	cancelled
cp.	candlepower
carb.	carburetor
C. I.	cast iron
ctr.	center
C/L	Center Line
chamf.	chamfered
chr.	chromium
c/breaker	circuit breaker
c/nut	clinch nut
comb.	combination
compt.	compartment
comp.	complete or component
con.	connecting-tion-or
cont.	continued
cop.	copper
ck.	countersunk
cu.	cubic
cust.	custom
cyl.	cylinder
defl.	deflector
Det.	Detroit
diag.	diagonal
dia.	diameter
diaph.	diaphragm
diff.	differential
dir.	directional
dist.	distributor or distributing

MyMopar.com

ABBREVIATIONS - CONT'D

div.	division
dom.	domestic
d/r shaft	double rocker shaft
elec.	electric
elim.	eliminator
eng.	engine
equip.	equipment
etc.	et cetera
Evans.	Evansville
exh.	exhaust
Exp.	Export
ext.	extension
F.	Fahrenheit
fast.	fastening, fastener
fil. hd.	fillister head
fin.	finish
fl. hd.	flat head
ft.	foot or feet
freq.	frequency
frt.	front
gen.	generator
gov.	governor
Gm.	Gyromatic Transmission
h/brake	hand brake
hd.	head
h/lamp	headlamp
hdls.	headless
h/lining	headlining
htr.	heater
hex.	hexagon
hsg.	housing
hydr.	hydraulic
ign.	ignition
in.	inch
incl.	inclusive or includes
ind.	indicator
I.D.	inside diameter
inst.	instrument or instruction
ins.	insulating-tion-or
inter.	intermittently-mediate
j/block	junction block
kilo.	kilometer
lea.	leather
lt.	left
LHD.	Left Hand Drive
L.H. thd.	Left Hand Thread
lgh.	length
lic.	license
l/washer	lockwasher
L.A.	Los Angeles
L.C.	low compression
lwr.	lower
M.I.	malleable iron
manif.	manifold
man.	manual
m/cyl.	master cylinder
med.	medium
M.P.H.	miles per hour
midg.	moulding
mtg.	mounting
neg.	negative
ni.	nickel
No. or #	number
oper.	operating
opp.	opposite
opt.	optional
oz.	ounce
O.D.	outside diameter
O/S	oversize
pkg.	package
pkd.	parkerized
park.	parking
p/lamp	parking lamp
part.	partial or partition
P. or Pass.	passenger
Penna.	Pennsylvania
pil.	pillar
pln.	plain
p/washer	plainwasher
pltd.	plated
pt.	point
pos.	positive
lbs.	pounds
prop.	propeller
qtr.	quarter
rad.	radiator
rr.	rear
rec.	receiver
refl.	reflector
reg.	regulator
reinf.	reinforcement
rem.	remote
repl.	replacement
req.	required
ret.	retainer
R.P.M.	revolutions per minute
rt.	right
RHD	Right Hand Drive
R.H. thd.	Right Hand Thread
rd.	round
S.L.	San Leandro
sec.	section
s-fin.	semi-finished
ser.	serial or service
s.p.	shakeproof
sig.	signal
s/r shaft	single rocker shaft
speedo.	speedometer
spec. equip.	special equipment
sq.	square
std.	standard
S.	steel
strg.	steering
stght.	straight
supt.	support
synch.	synchronizer
T/Lamp	tail lamp
T/Plate	tapping plate
T/Bolt	tee-bolt
term.	terminal
T.	teeth
thd.	thread
thk.	thick
Tor. Cv.	Torque Converter
trans.	transmission
tub.	tubular
U/Drive	underdrive
U/S	undersize
univ.	universal
U.J.	universal joint
vac.	vacuum
vent.	ventilator-ing
vert.	vertical
v.	volt

MyMopar.com

ABBREVIATIONS - CONT'D

vol. cont.	volume control	w/lift	window lift
w/strip	weatherstrip	w/shield	windshield
whl.	wheel	w/	with
W.B.	wheelbase	w/o	without
w/house	wheelhouse		

PASSENGER CAR MODELS AND BODY STYLES

2 D. Cl. Sed.	2 Door Club Sedan	Ply.	Plymouth
4 D.	4 Door Sedan	Sed.	Sedan
Cv. Cp.	Convertible Coupe	Sp.	Special
Cl. Cp.	Club Coupe	Sp. Cl. Cp.	Special Club Coupe
Chry.	Chrysler	Sp. 4 D. Sed.	Special 4 Door Sedan
Cust.	Custom	Sta. Wgn.	Station Wagon
Imp.	Imperial	Sub.	Suburban

PART TYPE CODE SYSTEM

To simplify the listing and locating of individual parts, a system of Part Type Codes is used in this Parts Catalog.

To illustrate, a Type of Part will be indicated as:

2-03-3 KNUCKLE, w/BUSHING

This code is broken down as follows:

2- Indicates the Major Group: "Group 2 -- Front Suspension"

-03 Indicates the Sub Group: "03 -- Steering Knuckle"

-3 Indicates the Code for the specific name of the part: "Knuckle, w/Bushing"

Part Type Code 2-03-3 will always appear as "KNUCKLE, w/BUSHING."

VEHICLE SERIAL NUMBER PLATE

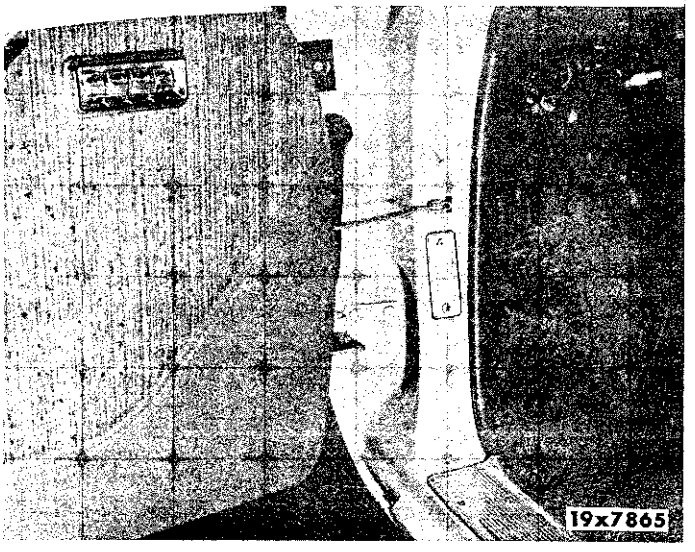

The Vehicle Serial Number Plate is located on the left front door hinge pillar.

If you are not certain of the correct part number when ordering parts for a specific vehicle, always specify the Vehicle Serial Number.

MyMopar.com

ENGINE IDENTIFICATION

A method of Engine Serial Numbering is now in effect.

The 1st letter designates the Series

The two numbers following the letter will be Displacement

The last numerals designate Month and Date built

S	38	8	3
Series Designation	Displacement	Month	Day

The example above is an engine No. as it would appear on Engine built August 3.

Listed below are Engine Numbers as they will appear assuming the production date is August 3.

Type of Engine

6 Cyl. Pass. Car "G" (170 cu. in.) - S-17-8-3

6 Cyl. Pass. Car R "G" (225 cu. in.) - S-22-8-3

8 Cyl. Pass. Car "B" (361 cu. in.) - S-36-8-3

8 Cyl. Pass. Car "B" (383 cu. in.) - S-38-8-3

8 Cyl. Pass. Car R "B" (413 cu. in.) - S-41-8-3

8 Cyl. Pass. Car (318 cu. in.) Not Affected.

ENGINE NUMBER

LOCATING ENGINE NUMBER

A boss is provided on all cylinder blocks upon which the Engine Number is stamped. For 6-cylinder engines, this is located on the left side of the block at the front and below the cylinder head. For 8-cylinder engines, it will be found on the top of the cylinder block behind the water pump, except on the Plymouth SP2, where it is located on the front of the block beneath the left-hand (driver's side) cylinder head.

IMPORTANT

MoPar Engines are supplied with blank engine number bosses only. Dealers are governed by state law on the application of engine numbers. In states where license fees are based on displacement or taxable horsepower, it will be necessary to change Vehicle Registration if the new MoPar Engine differs from the one which it replaces.

ILLUSTRATIONS

Illustrations are located at the beginning of each group. Parts are identified on the illustration by Noun Name and Part Type Code. The Part Type Code designation will serve as an index to locate the listing of the Group.

MyMopar.com

PAGE NUMBERING

Two-part page numbers are used throughout this catalog. The first part of the page designation indicates the major group or section. The second part indicates the actual page number in the group. For example:

1-1 indicates Group 1, Accessories, Page 1

2-1 indicates Group 2, Front Suspension, Page 1

In the maintenance of the Loose Leaf Parts Catalog Revision Service, it may become necessary to add information beyond the capacity of the page. In this event, an "A" page will be used. For example: If it becomes necessary, because of change, to add several part numbers to page 2-1 and space does not permit the addition, you will be given Page 2-1A. Page 2-1A should be filed immediately following page 2-1.

PARTS PACKAGES

Service Parts Packages, containing all parts needed for a specific service operation, are listed in their respective groups with related parts. The listing will show adaptability and model application. Often it becomes necessary to know just what parts are contained in a Service Package. To determine this, refer to the Service Package Section. This section contains a secondary listing of all Service Packages in this Parts Catalog together with a list of every component part of each package. Service Packages in this section are listed numerically by Part Type Code.

ALPHABETICAL INDEX

Reference to any part by sub-group name is provided in the Alphabetical Index. This index indicates the Part Type Code, by means of which the listing can be quickly located.

NUMERICAL INDEX

Reference to any part by part number is provided in the Numerical Index. This index indicates the Part Type Code.

ORDERING INFORMATION

NOTE - For information on how to order Mopar parts, see General Information Section in Mopar Parts Price List

MyMopar.com

CODE	PART NAME AND DESCRIPTION	CYL.	PER CAR	VALIANT LANCER	PLYMOUTH DODGE	CHRYSLER IMPERIAL

NOTES

MyMopar.com

CODE	PART NAME AND PART NUMBER	CODE	PART NAME AND PART NUMBER

PARTS PACKAGES

1-01-1 GUARD PACKAGE,
BUMPER . . . . . Part No. 2279 890
Consists of:
2 - ---- --- Cushion
2 - ---- --- Guard
4 - ---- --- Lockwasher
4 - ---- --- Nut
4 - ---- --- Plainwasher
4 - ---- --- Spacer

1-06-1 FLASHER PACKAGE,
EMERGENCY . . . . . Part No. 2097 278
Consists of:
1 - 2097 161 Bracket
1 - ---- --- Flasher
1 - ---- --- Screw
1 - ---- --- Washer and Nut

FLASHER PACKAGE,
EMERGENCY . . . . . Part No. 2256 968
Consists of:
1 - 2097 161 Bracket, Switch
1 - ---- --- Flasher
1 - ---- --- Screw
1 - ---- --- Washer and Nut

1-10-1 LAMP PACKAGE,
BACK-UP . . . . . Part No. 2290 704
Consists of:
2 - ---- --- Clip
1 - 147 683 Fuse
1 - 1302 807 Gasket
2 - 2189 517 Lamp
4 - ---- --- Screw
1 - 2258 404 Switch
1 - ---- --- Wiring, Switch
1 - ---- --- Wiring, Lamp
1 - ---- --- Wiring, Eng. Complete

LAMP PACKAGE,
BACK-UP . . . . . Part No. 2290 705
Consists of:
2 - ---- --- Clip
1 - ---- --- Bracket and Switch
1 - 147 683 Fuse
2 - 2189 517 Lamp
4 - ---- --- Screw
2 - 172 335 Screw
1 - ---- --- Wiring

LAMP PACKAGE,
BACK-UP . . . . . Part No. 2290 706
Consists of:
2 - ---- --- Clip
1 - 147 683 Fuse
1 - 1302 807 Gasket
2 - 2189 517 Lamp
4 - ---- --- Screw
1 - 2258 404 Switch
1 - ---- --- Wiring, Eng. Complete
1 - ---- --- Wiring, Lamp
1 - ---- --- Wiring, Switch

1-10-1 Cont'd
LAMP PACKAGE,
BACK-UP . . . . . Part No. 2290 707
Consists of:
1 - ---- --- Bracket and Light Switch
2 - ---- --- Clip
1 - 147 683 Fuse
2 - 2189 517 Lamp
2 - 172 335 Screw
4 - ---- --- Screw
1 - ---- --- Wiring

LAMP PACKAGE,
BACK-UP . . . . . Part No. *2290 708
Consists of:
1 - 2188 474 Lamp, Right
1 - 2188 475 Lamp, Left
4 - 9413 316 Screw
1 - 2258 404 Switch
1 - 1302 807 Gasket
1 - 147 683 Fuse
1 - ---- --- Wiring
1 - ---- --- Wiring
1 - ---- --- Wiring

LAMP PACKAGE,
BACK-UP . . . . . Part No. *2290 709
Consists of:
1 - 2188 474 Lamp, Right
1 - 2188 475 Lamp, Left
4 - 9413 316 Screw
1 - 147 683 Fuse
2 - 172 335 Screw
1 - ---- --- Switch
1 - ---- --- Wiring

LAMP PACKAGE,
BACK-UP . . . . . Part No. *2290 710
Consists of:
1 - 2188 476 Lamp, Right
1 - 2188 477 Lamp, Left
4 - 9413 316 Screw
1 - 2258 404 Switch
1 - 1302 807 Gasket
1 - 147 683 Fuse
1 - ---- --- Wiring
1 - ---- --- Wiring

LAMP PACKAGE,
BACK-UP . . . . . Part No. *2290 711
Consists of:
1 - 2188 476 Lamp, Right
1 - 2188 477 Lamp, Left
4 - 9413 316 Screw
2 - 172 335 Screw
1 - 147 683 Fuse
1 - ---- --- Switch

★ Indicates use as required.
Ⓑ Indicates parts not listed in any previous parts book.
* Indicates change or addition.

Printed in U.S.A.
Prices and specifications subject to change without notice.
May 1, 1962 Supersedes Sept. 15, 1961.

MyMopar.com

CODE	PART NAME AND PART NUMBER

1-10-1 Cont'd

LAMP PACKAGE,
BACK-UP . . . . . Part No. *2290 712
Consists of:
2 - 2189 063 Lamp
6 - 6006 464 Washer
1 - 2258 404 Switch
1 - 1302 807 Gasket
2 - 151 576 Bulb
1 - 147 683 Fuse
6 - ---- --- Nut
1 - ---- --- Wiring
1 - ---- --- Wiring
1 - ---- --- Wiring

LAMP PACKAGE,
BACK-UP . . . . . Part No. *2290 713
Consists of:
2 - 2189 063 Lamp
6 - 6006 464 Washer
1 - 147 683 Fuse
2 - 151 576 Bulb
2 - 172 335 Screw
1 - ---- --- Switch
6 - ---- --- Nut
1 - ---- --- Wiring
1 - ---- --- Wiring

LAMP PACKAGE,
BACK-UP . . . . . Part No. *2290 714
Consists of:
1 - 2189 432 Lamp, Right
1 - 2189 433 Lamp, Left
1 - 2258 404 Switch
1 - 1302 807 Gasket
2 - ---- --- Cable and Socket
2 - 151 576 Bulb
1 - 147 683 Fuse
1 - ---- --- Wiring
1 - ---- --- Wiring

LAMP PACKAGE,
BACK-UP . . . . . Part No. *2290 715
Consists of:
1 - 2189 432 Lamp, Right
1 - 2189 433 Lamp, Left
2 - ---- --- Cable and Socket
2 - 151 576 Bulb
2 - 172 335 Screw
1 - 147 683 Fuse
1 - ---- --- Wiring
1 - ---- --- Wiring

LAMP PACKAGE,
BACK-UP . . . . . Part No. *2290 716
Consists of:
2 - 142 456 Bulb
1 - 147 683 Fuse
1 - 2258 404 Switch
1 - 1302 807 Gasket, Switch
2 - ---- --- Gasket, Lens
2 - 2198 388 Socket
2 - ---- --- Wick
2 - ---- --- Gasket, Housing
2 - ---- --- Housing
2 - ---- --- Lens
1 - ---- --- Wiring
1 - ---- --- Wiring

CODE	PART NAME AND PART NUMBER

1-10-1 Cont'd

LAMP PACKAGE,
BACK-UP . . . . . Part No. *2290 717
Consists of:
2 - 142 456 Bulb
1 - 147 683 Fuse
2 - 172 335 Screw
2 - 2189 183 Gasket, Lens
2 - 2198 388 Socket
2 - ---- --- Lens
2 - ---- --- Housing
2 - ---- --- Wick
2 - ---- --- Gasket, Housing
1 - ---- --- Switch
1 - ---- --- Wiring

LAMP PACKAGE,
BACK-UP . . . . . Part No. *2290 718
Consists of:
1 - 147 683 Fuse
2 - 151 576 Bulb
1 - 1302 807 Gasket, Switch
2 - 2189 309 Lamp
1 - 2258 404 Switch
2 - 2290 189 Socket
6 - 6023 111 Nut
6 - ---- --- Screw
1 - ---- --- Wiring
1 - ---- --- Wiring

LAMP PACKAGE,
BACK-UP . . . . . Part No. *2290 719
Consists of:
1 - 147 683 Fuse
2 - 151 576 Bulb
2 - 172 335 Screw
2 - 2189 309 Lamp
2 - 2290 189 Socket
6 - 6023 111 Nut
6 - ---- --- Screw
1 - ---- --- Switch
1 - ---- --- Wiring

LAMP PACKAGE,
BACK-UP . . . . . Part No. *2290 725
Consists of:
1 - 147 683 Fuse
2 - 151 576 Bulb
1 - 1302 807 Gasket, Switch
1 - 2258 404 Switch
2 - 2290 189 Socket
1 - ---- --- Wiring
1 - ---- --- Wiring

LAMP PACKAGE,
BACK-UP . . . . . Part No. *2290 726
Consists of:
1 - 147 683 Fuse
2 - 151 576 Bulb
1 - 1676 629 Actuator
1 - 1972 052 Switch
2 - 2290 189 Socket
2 - ---- --- Rivet

MyMopar.com

CODE	PART NAME AND PART NUMBER
1-10-1	Cont'd LAMP PACKAGE, BACK-UP . . . . . Part No. *2290 727 Consists of: 1 - 147 683 Fuse 2 - 151 576 Bulb 1 - 1302 807 Gasket 2 - ---- --- Socket and Cable 1 - 2258 404 Switch 1 - ---- --- Wiring 1 - ---- --- Wiring
	LAMP PACKAGE, BACK-UP . . . . . Part No. *2290 728 Consists of: 1 - 147 683 Fuse 2 - 151 576 Bulb 1 - 1676 629 Actuator 2 - 1972 052 Switch 2 - ---- --- Socket and Cable 2 - ---- --- Rivet
1-14-40	LAMP PACKAGE, COURTESY . . . . . Part No. 2258 787 Consists of: 2 - ---- --- Bracket 2 - 142 453 Bulb 2 - 161 895 Screw 1 - ---- --- Socket and Wire 2 - ---- --- Speed Nut
1-19-1	LAMP PACKAGE, GLOVE BOX . . . . . Part No. 2256 383 Consists of: 1 - ---- --- Bracket 1 - 152 244 Bulb 1 - ---- --- Clip 1 - ---- --- Insulator 1 - ---- --- Lamp and Switch 2 - 161 895 Screw
1-21-1	CLOCK PACKAGE . . . . Part No. 2258 463 Consists of: 1 - ---- --- Cable 1 - ---- --- Clock 1 - ---- --- Fuse 1 - ---- --- Knob 1 - ---- --- Nut
	CLOCK PACKAGE . . . . Part No. 2258 826 Consists of: 1 - ---- --- Cable, Feed 1 - ---- --- Clock 1 - ---- --- Fuse 1 - ---- --- Knob 1 - ---- --- Nut
	CLOCK PACKAGE . . . . Part No. 2258 804 Consists of: 1 - ---- --- Clock 1 - 149 559 Fuse

CODE	PART NAME AND PART NUMBER
1-30-1	LAMP PACKAGE, TRUNK COMPARTMENT. Part No. 2290 063 Consists of: 1 - 151 578 Bulb 2 - 444 267 Screw 1 - ---- --- Socket 1 - ---- --- Switch 1 - ---- --- Wiring
	LAMP PACKAGE, TRUNK COMPARTMENT. Part No. 2290 064 Consists of: 1 - 151 578 Bulb 1 - 138 489 Lockwasher 1 - 444 267 Screw 1 - ---- --- Socket 1 - 1972 426 Switch 1 - ---- --- Wiring
1-42-1	BRAKE PACKAGE, POWER . . . . . Part No. 2279 993 Consists of: 2 - ---- --- Bolt 1 - 2074 930 Brake 6 - 448 797 Clamp 1 - 1944 092 Connector 1 - 2074 965 Gasket 1 - 1559 753 Gasket 1 - ---- --- Hose 2 - ---- --- Hose 4 - 120 214 Lockwasher 4 - 2076 232 Nut 4 - 120 376 Nut 1 - ---- --- Piston 2 - ---- --- Plainwasher 1 - 2071 043 Tank 1 - 2074 934 Valve
	BRAKE PACKAGE, POWER . . . . . Part No. 2279 994 Consists of: 1 - 2071 072 Brake 2 - 448 797 Clamp 1 - 1944 092 Connector 1 - ---- --- Hose 1 - 1739 246 Hose 4 - 120 214 Lockwasher 4 - 120 376 Nut 1 - ---- --- Piston 1 - ---- --- Reinforcement 1 - 2200 341 Screw 1 - ---- --- Seal 1 - 2265 635 Stop
	BRAKE PACKAGE, POWER . . . . . Part No. 2279 999 Consists of: 1 - 2201 915 Brake 2 - 448 797 Clamp 1 - 1944 092 Connector 1 - ---- --- Hose 1 - ---- --- Piston 4 - 120 214 Lockwasher 4 - 120 376 Nut

(Pkg. Cont'd)

★ Indicates use as required.
⊟ Indicates parts not listed in any previous parts book.
* Indicates change or addition.

Printed in U.S.A.
Prices and specifications subject to change without notice.
May 1, 1962 Supersedes Sept. 15, 1961.

MyMopar.com

CODE	PART NAME AND PART NUMBER
1-42-1	Cont'd 1 - 2265 635 Stop 1 - ---- --- Reinforcement 1 - 2200 341 Screw
1-48-137	DEFOGGER PACKAGE, REAR WINDOW . . . . . Part No. 2277 503 Consists of: 1 - ---- --- Bezel 1 - ---- --- Blower 1 - 2277 458 Duct and Seal 1 - 142 864 Fuse 1 - ---- --- Grille 1 - 2219 627 Grille and Gasket 3 - ---- --- Lockwasher 2 - ---- --- Nut 4 - ---- --- Nut and Washer 1 - ---- --- Nut 1 - 2277 289 Plate 1 - 9416 313 Screw 3 - 9414 721 Screw 1 - ---- --- Tube 1 - ---- --- Washer 1 - ---- --- Wiring 1 - 2076 423 Wiring
	DEFOGGER PACKAGE, REAR WINDOW . . . . . .Part No. 2277 505 Consists of: 1 - ---- --- Bezel 1 - ---- --- Blower 1 - 2277 459 Duct and Seal 1 - 142 864 Fuse 1 - ---- --- Grille 1 - 2219 627 Grille and Gasket 3 - ---- --- Lockwasher 1 - ---- --- Nut 4 - ---- --- Nut 2 - ---- --- Nut 1 - 2277 289 Plate 3 - 9414 721 Screw 1 - 9416 313 Screw 1 - 1972 774 Switch 1 - ---- --- Terminal 1 - ---- --- Tube 1 - ---- --- Washer 1 - ---- --- Wiring 1 - 2076 423 Wiring
	DEFOGGER PACKAGE, REAR WINDOW . . . . . Part No. 2277 504 Consists of: 1 - ---- --- Bezel 1 - ---- --- Blower 1 - 2277 455 Duct 1 - 142 864 Fuse 1 - ---- --- Grille, Inlet 1 - 2219 627 Grille and Gasket 3 - ---- --- Lockwasher 2 - ---- --- Nut 3 - 9414 721 Screw 4 - ---- --- Nut (Pkg. Cont'd)
1-48-137	Cont'd 1 - ---- --- Tube 1 - ---- --- Wiring 1 - 2076 423 Wiring
	DEFOGGER PACKAGE, REAR WINDOW . . . . . Part No. *2277 635 Consists of: 1 - 9416 313 Screw 3 - 9414 721 Screw 1 - ---- --- Wiring, Switch 1 - 2219 627 Grille, Outlet 1 - 2197 410 Switch 1 - 2197 389 Bezel, Switch 1 - 1887 935 Knob 1 - 1887 582 Plate 1 - ---- --- Nut 4 - ---- --- Nut 1 - 142 864 Fuse 3 - ---- --- Washer 1 - ---- --- Grille, Inlet 1 - ---- --- Bezel, Inlet Grille 1 - ---- --- Blower 2 - ---- --- Nut 1 - ---- --- Duct 1 - ---- --- Washer 1 - ---- --- Tube 2 - ---- --- Clamp 1 - ---- --- Seal 1 - ---- --- Wiring, Rear
1-48-299	SWITCH PACKAGE, REAR WINDOW DEFOGGER . . . . . Part No. 2097 226 Consists of: 1 - 1972 898 Bezel 1 - 1887 591 Knob 1 - 1887 603 Nut 1 - 1972 772 Switch
1-50-1	SWITCH PACKAGE, ELECTRIC WINDOW LIFT SAFETY. . . . . Part No. 2197 405 Consists of: 3 - 1264 933 Sleeve 1 - 2197 404 Switch 4 - 903 895 Terminal 1 - ---- --- Terminal 2 - ---- --- Terminal 1 - ---- --- Wire, 48" Long 1 - 1345 871 Connector, Wire
1-76-1	MIRROR PACKAGE, OUTSIDE REAR VIEW . Part No. 2275 345 Consists of: 1 - ---- --- Gasket 1 - ---- --- Mirror 2 - 9417 530 Screw
	MIRROR PACKAGE, OUTSIDE REAR VIEW . Part No. 2299 574 Consists of: 1 - ---- --- Gasket 1 - ---- --- Mirror 2 - 9417 530 Screw

MyMopar.com

CODE	PART NAME AND PART NUMBER

1-76-1 Cont'd

MIRROR PACKAGE,
OUTSIDE REAR VIEW Part No. 2275 015
Consists of:
1 - 2161 931 Anti-Squeak
1 - ---- --- Mirror
2 - 274 791 Screw

MIRROR PACKAGE,
OUTSIDE REAR VIEW Part No. 2275 020
Consists of:
1 - 2161 931 Anti-Squeak
1 - ---- --- Mirror
2 - 274 791 Screw

MIRROR PACKAGE,
OUTSIDE REAR VIEW Part No. 2275 937
Consists of:
1 - 2161 931 Anti-Squeak
1 - ---- --- Bracket
1 - ---- --- Mirror and Control
1 - 2080 541 Nut
2 - 9411 860 Screw
2 - ---- --- Screw

1-82-2 WASHER PACKAGE,
WINDSHIELD . . . . . Part No. 2257 692
1 - ---- --- Bracket, Reservoir
1 - 1838 001 Cap
1 - 1880 222 Check Valve
1 - 1838 000 Clip, Valve Mounting
2 - ---- --- Clip, Nozzle
1 - ---- --- Hose, Tee to Nozzle
1 - ---- --- Hose, Tee to Nozzle
1 - ---- --- Hose, Check Valve to Tee
1 - ---- --- Hose, Check Valve to Pump
1 - ---- --- Hose, Check Valve to Reservoir
1 - 138 557 L/Washer
1 - ---- --- Nut, Pump Mounting
2 - 2198 211 Nozzle
1 - 1887 148 Pump
1 - 1972 368 Reservoir
2 - 444 267 Screw, Reservoir Mounting
1 - 444 267 Screw, Check Valve
1 - 1571 028 Strainer
1 - 1523 160 Tee

WASHER PACKAGE,
WINDSHIELD . . . . . Part No. 2290 045
Consists of:
1 - 2258 779 Bracket
1 - 1838 001 Cap
1 - ---- --- Clip
1 - ---- --- Grommet
1 - ---- --- Hose, to Nozzle, Right
1 - ---- --- Hose, to Nozzle, Left
1 - ---- --- Hose to Valve
1 - ---- --- Hose Reservoir to Valve
1 - ---- --- Hose Foot Pump to Valve
1 - ---- --- Lockwasher

(Pkg. Cont'd)

1-82-2 Cont'd
1 - 2258 929 Nozzle and Clip, Right
1 - 2258 926 Nozzle and Clip, Left
1 - ---- --- Nut
1 - 2258 782 Pump
5 - 444 267 Screw
3 - ---- --- Screw
1 - 161 895 Screw
1 - ---- --- Strap
1 - 1571 028 Strainer
1 - ---- --- Valve
1 - ---- --- Washer

2-07-1 END PACKAGE, TIE ROD
INNER . . . . . Part No. *2448 384
Consists of:
1 - ---- --- Bolt, Tie Rod End Clamp
1 - ---- --- Clamp, Tie Rod End
1 - ---- --- End, Tie Rod
1 - ---- --- Nut, Tie Rod End Clamp Bolt Lock
1 - ---- --- Pin, Tie Rod Nut Cotter

END PACKAGE, TIE ROD
OUTER . . . . . Part No. *2448 383
Consists of:
1 - ---- --- Bolt, Tie Rod End Clamp
1 - ---- --- Clamp, Tie Rod End
1 - ---- --- End, Tie Rod
1 - ---- --- Nut, Tie Rod End Clamp Bolt Lock
1 - ---- --- Pin, Tie Rod Nut Cotter

END PACKAGE, TIE ROD
INNER . . . . . Part No. 2279 989
Consists of:
1 - ---- --- Bolt, Tie Rod End Clamp
1 - ---- --- Clamp, Tie Rod End
1 - ---- --- End, Tie Rod
1 - ---- --- Pin, Tie Rod End Nut Cotter
1 - ---- --- Nut, Tie Rod End Clamp Bolt
1 - ---- --- Spacer, Tie Rod End Ball

END PACKAGE, TIE ROD
OUTER . . . . . Part No. *2448 398
Consists of:
1 - ---- --- Bolt, Tie Rod End Clamp
1 - ---- --- Pin, Tie Rod End Nut Cotter
1 - ---- --- Clamp, Tie Rod End
1 - ---- --- End, Tie Rod
1 - ---- --- Nut, Tie Rod End Clamp Bolt

END PACKAGE, TIE ROD
INNER RIGHT . . . . . Part No. 2279 990
Consists of:
1 - ---- --- Bolt, Tie Rod End Clamp
1 - ---- --- Clamp, Tie Rod End
1 - ---- --- End, Tie Rod

(Pkg. Cont'd)

MyMopar.com

CODE	PART NAME AND PART NUMBER
2-07-1	Cont'd
	1 - ---- --- Pin, Tie Rod End Ball Nut Cotter
	1 - ---- --- Nut, Tie Rod End Clamp Bolt
	END PACKAGE, TIE ROD INNER LEFT . . . . . Part No. 2279 991
	Consists of:
	1 - ---- --- Bolt, Tie Rod End Clamp
	1 - ---- --- Clamp, Tie Rod End
	1 - ---- --- End, Tie Rod
	1 - ---- --- Pin, Tie Rod End Ball Nut Cotter
	1 - ---- --- Nut, Tie Rod End Clamp Bolt
	END PACKAGE, TIE ROD OUTER . . . . . Part No. 2279 992
	Consists of:
	1 - ---- --- Bolt, Tie Rod End Clamp
	1 - ---- --- Clamp, Tie Rod End
	1 - ---- --- End, Tie Rod
	1 - ---- --- Pin, Tie Rod End Nut Cotter
	1 - ---- --- Nut, Tie Rod End Clamp Bolt
	1 - 1858 262 Shield, Tie Rod End Seal, Right
	1 - 1858 263 Shield, Tie Rod End Seal, Left
	1 - ---- --- Spacer, Tie Rod End Ball
	END PACKAGE, TIE ROD OUTER, RHD. . . . . Part No. *2421 350
	Consists of:
	1 - 181 610 Bolt, Tie Rod End Clamp
	1 - ---- --- Clamp, Tie Rod End
	1 - ---- --- End, Tie Rod
	1 - ---- --- Nut, Tie Rod End Clamp Bolt Lock
	1 - 119 209 Pin, Tie Rod Nut Cotter
	1 - 2208 076 Shield, Tie Rod End Seal, Right
	1 - 2208 077 Shield, Tie Rod End Seal, Left
2-08-57	BALL JOINT PACKAGE, FRONT SUSPENSION UPPER . . . . . Part No. 2298 533
	Consists of:
	1 - ---- --- Ball Joint
	1 - 273 705 Nut, Ball Joint Stud
	1 - 108 636 Pin, Ball Joint Stud Nut Cotter
	1 - 1858 115 Plug, Ball Joint
	1 - 2071 255 Seal, Ball Joint
	BALL JOINT PACKAGE, FRONT SUSPENSION UPPER . . . . . Part No. 2298 534
	Consists of:
	1 - ---- --- Ball Joint
	1 - 128 025 Nut, Ball Joint Stud
	1 - 119 209 Pin, Ball Joint Stud Nut Cotter
	1 - 1858 115 Plug, Ball Joint
	1 - 1825 487 Seal, Ball Joint
	1 - 1672 960 Washer, Ball Joint Stud Nut
	BALL JOINT PACKAGE, FRONT SUSPENSION UPPER . . . . . Part No. 2298 536
	Consists of:
	1 - ---- --- Ball Joint
	1 - 128 027 Nut, Ball Joint Stud
	1 - 119 209 Pin, Ball Joint Stud Nut Cotter
	1 - 1858 115 Plug, Ball Joint
	1 - 1825 761 Seal, Ball Joint
	1 - 1672 960 Washer, Ball Joint Stud Nut
2-08-59	CAM and BUSHING PACKAGE, FRONT SUSPENSION UPPER CONTROL ARM . Part No. 2084 920
	Consists of:
	2 - 2071 204 Bushing, Arm
	2 - ---- --- Cam, Arm, Slotted
	2 - ---- --- Cam, Arm
	2 - 1825 449 Nut, Arm Bolt
	2 - 120 384 Washer, Arm Cam Lock
	CAM and BUSHING PACKAGE, FRONT SUSPENSION UPPER CONTROL ARM SUPPORT . . . . . Part No. 1881 652
	Consists of:
	2 - ---- --- Bracket, Cam
	2 - 1825 317 Bushing, Arm
	2 - ---- --- Cam, Bracket Slotted
	2 - 1825 449 Nut, Bracket Cam
	2 - ---- --- Washer, Bracket Cam Lock
2-10-55	ARM and BALL JOINT PACKAGE, FRONT SUSPENSION STEERING KNUCKLE HOUSING, LOWER RIGHT . . . . . Part No. 2275 462
	Consists of:
	1 - ---- --- Arm, Steering Knuckle Ball Joint Housing
	1 - 128 025 Nut, Steering Knuckle Ball Joint Stud
	1 - 119 209 Pin, Steering Knuckle Ball Joint Nut Cotter
	1 - 1858 115 Plug, Steering Knuckle Lower Ball Joint
	1 - 1858 209 Seal, Steering Knuckle Lower Ball Joint
	ARM and BALL JOINT PACKAGE, FRONT SUSPENSION STEERING KNUCKLE HOUSING, LOWER LEFT . . . . . Part No. 2275 463
	Consists of:
	1 - ---- --- Arm, Steering Knuckle Ball Joint Housing
	1 - 128 025 Nut, Steering Knuckle Ball Joint Stud
	1 - 119 209 Pin, Steering Knuckle Ball Joint Nut Cotter
	1 - 1858 209 Seal, Steering Knuckle Lower Ball Joint

(Pkg. Cont'd)

MyMopar.com

CODE	PART NAME AND PART NUMBER
2-10-55	Cont'd 1 - 1858 115 Plug, Steering Knuckle Lower Ball Joint ARM and BALL JOINT PACKAGE, FRONT SUSPENSION STEERING KNUCKLE HOUSING, LOWER RIGHT . . . . . Part No. 2275 464 Consists of: 1 - ---- --- Arm, Steering Knuckle Ball Joint Housing 1 - 128 025 Nut, Steering Knuckle Ball Joint Stud 1 - 119 209 Pin, Steering Knuckle Ball Joint Nut Cotter 1 - 1858 115 Plug, Steering Knuckle Lower Ball Joint 1 - 1858 209 Seal, Steering Knuckle Lower Ball Joint ARM and BALL JOINT PACKAGE, FRONT SUSPENSION STEERING KNUCKLE HOUSING, LOWER LEFT. . . . . Part No. 2275 465 Consists of: 1 - ---- --- Arm, Steering Knuckle Ball Joint Housing 1 - 128 025 Nut, Steering Knuckle Ball Joint Stud 1 - 119 209 Pin, Steering Knuckle Ball Joint Nut Cotter 1 - 1858 115 Plug, Steering Knuckle Lower Ball Joint 1 - 1858 209 Seal, Steering Knuckle Lower Ball Joint BALL JOINT PACKAGE, FRONT SUSPENSION LOWER . . . . . Part No. 2298 535 Consists of: 1 - ---- --- Ball Joint 1 - 128 027 Nut, Ball Joint Stud 1 - 119 209 Pin, Ball Joint Stud Nut Cotter 1 - 1858 115 Plug, Ball Joint 1 - 1825 488 Seal, Ball Joint 1 - 1672 960 Washer, Ball Joint Stud Nut BALL JOINT PACKAGE, FRONT SUSPENSION LOWER . . . . . Part No. 2298 537 Consists of: 1 - ---- --- Ball Joint 1 - 1671 405 Nut, Ball Joint Stud 1 - 119 209 Pin, Ball Joint Stud Nut Cotter 1 - 1858 115 Plug, Ball Joint 1 - 1825 762 Seal, Ball Joint 1 - 1672 961 Washer, Ball Joint Stud Nut

CODE	PART NAME AND PART NUMBER
2-10-55	Cont'd ARM and BALL JOINT PACKAGE, FRONT SUSPENSION STEERING KNUCKLE HOUSING, LOWER RIGHT, RHD. . Part No. 2275 466 Consists of: 1 - ----- --- Arm, Steering Knuckle Ball Joint Housing 1 - 128 025 Nut, Steering Knuckle Ball Joint Stud 1 - 1858 115 Plug, Steering Knuckle Lower Ball Joint 1 - 119 209 Pin, Steering Knuckle Ball Joint Nut Cotter 1 - 1858 209 Seal, Steering Knuckle Lower Ball Joint ARM and BALL JOINT PACKAGE, FRONT SUSPENSION STEERING KNUCKLE HOUSING, LOWER LEFT, RHD. . . Part No. 2275 467 Consists of: 1 - ---- --- Arm, Steering Knuckle Ball Joint Housing 1 - 128 025 Nut, Steering Knuckle Ball Joint Stud 1 - 1858 115 Plug, Steering Knuckle Lower Ball Joint 1 - 119 209 Pin, Steering Knuckle Ball Joint Nut Cotter 1 - 1858 209 Seal, Steering Knuckle Lower Ball Joint
2-10-57	BUSHING and RETAINER PACKAGE, FRONT SUSPENSION LOWER CONTROL ARM STRUT Part No. 2084 045 Consists of: 1 - 1734 321 Bushing, Control Arm Strut 1 - 1825 432 Nut, Control Arm Strut Bushing 2 - 1734 341 Retainer, Control Arm Strut Bushing BUSHING and RETAINER PACKAGE, FRONT SUSPENSION LOWER CONTROL ARM STRUT Part No. 2084 918 Consists of: 1 - 2071 167 Bushing, Front Suspension Strut 1 - 124 634 Nut, Front Suspension Strut Bushing Retainer 2 - 2071 211 Retainer, Front Suspension Strut Bushing
2-10-61	SHAFT PACKAGE, LOWER CONTROL ARM . . . . Part No. 2275 460 Consists of: 1 - 128 027 Nut, Lower Control Arm Shaft (Pkg. Cont'd)

★ Indicates use as required.
⊟ Indicates parts not listed in any previous parts book.
* Indicates change or addition.

Printed in U.S.A.
Prices and specifications subject to change without notice.
May 1, 1962 Supersedes Nov. 30, 1961.

MyMopar.com

CODE	PART NAME AND PART NUMBER
2-10-61	Cont'd 1 - 119 209 Pin, Lower Control Arm Shaft Nut Cotter 1 - ---- --- Shaft, Lower Control Arm 1 - 2071 470 Washer, Lower Control Arm Shaft SHAFT PACKAGE, LOWER CONTROL ARM. . . . . Part No. 2275 461 Consists of: 1 - 128 027 Nut, Lower Control Arm Shaft 1 - 119 209 Pin, Lower Control Arm Shaft Nut Cotter 1 - ---- --- Shaft, Lower Control Arm 1 - 2071 470 Washer, Lower Control Arm Shaft SHAFT and BUSHING PACKAGE, FRONT SUSPENSION LOWER CONTROL ARM . . . . . Part No. 1881 650 Consists of: 1 - 1636 017 Bushing, Shaft 1 - ---- --- Nut, Bushing 1 - ---- --- Nut, Shaft 1 - ---- --- Pin, Arm 1 - 119 209 Pin, Bushing 1 - ---- --- Shaft, Lower Control Arm 1 - ---- --- Washer, Bushing 1 - ---- --- Washer, Shaft Nut SHAFT and BUSHING PACKAGE, FRONT SUSPENSION LOWER CONTROL ARM . . . . . Part No. 1881 647 Consists of: 1 - 1636 010 Bushing, Shaft 1 - ---- --- Nut, Bushing 1 - 128 213 Nut, Shaft 1 - 137 214 Pin, Arm 1 - 119 209 Pin, Bushing Nut Cotter 1 - ---- --- Shaft, Lower Control Arm 1 - ---- --- Washer, Bushing 1 - ---- --- Washer, Shaft Nut
2-14-1	BOLT and SWIVEL PACKAGE, TORSION BAR or SPRING FRONT END ADJUSTING . . . . Part No. *2275 468 Consists of: 1 - ---- --- Bolt 1 - ---- --- Swivel BOLT and SWIVEL PACKAGE, TORSION BAR or SPRING FRONT END ADJUSTING . . . . Part No. *2275 469 Consists of: 1 - ---- --- Bolt 1 - ---- --- Swivel

CODE	PART NAME AND PART NUMBER
2-14-1	Cont'd BOLT and SWIVEL PACKAGE, TORSION BAR or SPRING FRONT END ADJUSTING . . . . Part No. *2275 470 Consists of: 1 - ---- --- Bolt 1 - ---- --- Swivel BOLT and SWIVEL PACKAGE, TORSION BAR or SPRING REAR END ANCHOR ADJUSTING . . . . . Part No. 2196 773 Consists of: 1 - ---- --- Bolt, Torsion Bar Anchor 1 - ---- --- Swivel, Torsion Bar Anchor BOLT and SWIVEL PACKAGE, TORSION BAR or SPRING REAR END ANCHOR ADJUSTING . . . . . Part No. 2196 774 Consists of: 1 - ---- --- Bolt, Torsion Bar Anchor 1 - ---- --- Swivel, Torsion Bar Anchor
2-14-8	ANCHOR PACKAGE, FRONT SUSPENSION TORSION BAR or SPRING, REAR END, RIGHT . . . Part No. 2196 750 Consists of: 1 - ---- --- Anchor, End 1 - ---- --- Bolt, End Anchor Adjusting 1 - 1639 171 Lock, End Anchor 1 - 1857 580 Plug, End Anchor 1 - 1613 388 Seal, End Anchor 1 - 1857 549 Seat, End Anchor Adjusting 1 - ---- --- Swivel, End Anchor Adjusting ANCHOR PACKAGE, FRONT SUSPENSION TORSION BAR or SPRING, REAR END, LEFT . . . Part No. 2196 751 Consists of: 1 - ---- --- Anchor, End 1 - ---- --- Bolt, End Anchor Adjusting 1 - 1639 171 Lock, End Anchor 1 - 1857 580 Plug, End Anchor 1 - 1613 388 Seal, End Anchor 1 - 1857 549 Seat, End Anchor Adjusting 1 - ---- --- Swivel, End Anchor Adjusting ANCHOR PACKAGE, FRONT SUSPENSION TORSION BAR or SPRING, REAR END, RIGHT . . . Part No. 2196 752 Consists of: 1 - ---- --- Anchor, End 1 - ---- --- Bolt, End Anchor Adjusting 1 - 1639 171 Lock, End Anchor 1 - 1825 582 Plug, End Anchor 1 - 1613 388 Seal, End Anchor 1 - 1857 549 Seat, End Anchor Adjusting 1 - ---- --- Swivel, End Anchor Adjusting

★ Indicates use as required.
⊟ Indicates parts not listed in any previous parts book.
May 1, 1962 Supersedes Nov. 30, 1961.

Printed in U.S.A.
Prices and specifications subject to change without notice.
* Indicates change or addition.

MyMopar.com

CODE	PART NAME AND PART NUMBER
2-14-8	Cont'd ANCHOR PACKAGE, FRONT SUSPENSION TORSION BAR or SPRING, REAR END, LEFT . . . Part No. 2196 753 Consists of: 1 - ---- --- Anchor, End 1 - ---- --- Bolt, End Anchor Adjusting 1 - 1639 171 Lock, End Anchor 1 - 1825 582 Plug, End Anchor 1 - 1613 388 Seal, End Anchor 1 - 1857 549 Seat, End Anchor Adjusting 1 - ---- --- Swivel, End Anchor Adjusting ANCHOR PACKAGE, FRONT SUSPENSION TORSION BAR or SPRING, REAR END, RIGHT. . . Part No. 2196 754 Consists of: 1 - ---- --- Anchor, End 1 - ---- --- Bolt, End Anchor Adjusting 1 - 1639 171 Lock, End Anchor 1 - 1825 582 Plug, End Anchor 1 - 1613 388 Seal, End Anchor 1 - 1857 549 Seat, End Anchor Adjusting 1 - ---- --- Swivel, End Anchor Adjusting ANCHOR PACKAGE, FRONT SUSPENSION TORSION BAR or SPRING, REAR END, LEFT . . . Part No. 2196 755 Consists of: 1 - ---- --- Anchor, End 1 - ---- --- Bolt, End Anchor Adjusting 1 - 1639 171 Lock, End Anchor 1 - 1825 582 Plug, End Anchor 1 - 1613 388 Seal, End Anchor 1 - 1857 549 Seat, End Anchor Adjusting 1 - ---- --- Swivel, End Anchor Adjusting
3-09-3	REPAIR KIT, REAR AXLE DIFFERENTIAL. . . . . Part No. 2070 845 Consists of: 2 - ---- --- Disc 2 - ---- --- Disc 2 - ---- --- Plate 2 - ---- --- Plate 2 - ---- --- Plate
4-03-5	LINING PACKAGE, PARKING BRAKE . . . . . Part No. 1843 179 Consists of: 10 - ---- --- Lining 78 - ---- --- Rivets 30 - ---- --- Rivets
4-10-16	GASKET PACKAGE, TRANS- MISSION PARKING LOCK COVER . . . . . Part No. 2298 548 Consists of: 1 - ---- --- Gasket 5 - ---- --- Screw and Washer
5-03-1	LINING PACKAGE, WHEEL BRAKE SHOE . . . . . Part No. 1879 404 Consists of: 8 - ---- --- Lining LINING PACKAGE, WHEEL BRAKE SHOE . . . . . Part No. 2240 227 Consists of: 8 - ---- --- Lining
5-03-1	Cont'd LINING PACKAGE, WHEEL BRAKE SHOE . . . . . Part No. 2196 077 Consists of: 8 - ---- --- Lining 80 ---- --- Rivets LINING PACKAGE, WHEEL BRAKE SHOE . . . . . Part No. 2298 836 Consists of: 8 - ---- --- Lining LINING PACKAGE, WHEEL BRAKE SHOE . . . . . Part No. 2298 543 Consists of: 8 - ---- --- Lining LINING PACKAGE, WHEEL BRAKE SHOE . . . . . Part No. 2298 842 Consists of: 8 - ---- --- Lining LINING PACKAGE, WHEEL BRAKE SHOE . . . . . Part No. 2298 847 Consists of: 8 - ---- --- Lining LINING PACKAGE, WHEEL BRAKE SHOE . . . . . Part No. 2298 848 Consists of: 8 - ---- --- Lining
5-03-9	DAMPENER PACKAGE, WHEEL BRAKE. . . . . Part No. 2084 257 Consists of: 1 - 600 071 Spring 1 - 600 072 Retainer 1 - 600 073 Retainer 1 - ---- --- Rod
5-39-1	SERVICE PACKAGE, MASTER CYLINDER . . . . . Part No. 1879 303 Consists of: 1 - 958 659 Cup 1 - ---- --- Boot 1 - ---- --- Cup 1 - ---- --- Washer 1 - ---- --- Valve 1 - ---- --- Seal SERVICE PACKAGE, MASTER CYLINDER . . . . . Part No. 2196 904 Consists of: 1 - ---- --- Boot 1 - ---- --- Cup 1 - ---- --- Cup 1 - ---- --- Washer 1 - ---- --- Piston 1 - ---- --- Valve 1 - ---- --- Seal SERVICE PACKAGE, MASTER CYLINDER . . . . . Part No. 2196 905 1 - ---- --- Boot 1 - ---- --- Cup 1 - ---- --- Cup 1 - ---- --- Washer 1 - ---- --- Valve 1 - ---- --- Seal SERVICE PACKAGE, MASTER CYLINDER . . . . . Part No. 2196 906 Consists of: 1 - ---- --- Cup 1 - ---- --- Cup (Pkg. Cont'd)

★ Indicates use as required.
⊟ Indicates parts not listed in any previous parts book.
* Indicates change or addition.

Printed in U.S.A.
Prices and specifications subject to change without notice.
May 1, 1962 Supersedes Nov. 30, 1961.

MyMopar.com

CODE	PART NAME AND PART NUMBER
5-39-1	Cont'd 1 - ---- --- Washer 1 - ---- --- Valve 1 - ---- --- Seal 1 - ---- --- Piston SERVICE PACKAGE, MASTER CYLINDER . . . . . Part No. 2275 516 Consists of: 1 - ---- --- Piston and Push Rod 1 - ---- --- Valve 1 - ---- --- Seal 1 - ---- --- Cup 1 - ---- --- Cup 1 - ---- --- Washer 1 - ---- --- Boot SERVICE PACKAGE, MASTER CYLINDER . . . . . Part No. 2275 517 Consists of: 1 - 958 659 Cup 1 - ---- --- Cup 1 - ---- --- Piston and Push Rod 1 - ---- --- Valve 1 - ---- --- Seal 1 - ---- --- Washer 1 - ---- --- Boot SERVICE PACKAGE, MASTER CYLINDER . . . . . Part No. 2275 518 Consists of: 1 - 958 659 Cup 1 - ---- --- Cup 1 - ---- --- Piston 1 - ---- --- Valve 1 - ---- --- Seal 1 - ---- --- Washer 1 - 1316 628 Boot
5-39-4	COVER PACKAGE, MASTER CYLINDER . . Part No. 1752 470 Consists of: 1 - 1731 225 Cover 1 - 1731 227 Screw, Cover 1 - 2122 276 Gasket, Cover
5-63-1	SERVICE PACKAGE, WHEEL CYLINDER . . . . . Part No. 1818 639 Consists of: 2 - 1136 872 Boot 2 - 1674 080 Cup SERVICE PACKAGE, FRONT WHEEL CYLINDER . . Part No. 2084 788 Consists of: 2 - 1669 337 Cup 2 - 2072 625 Boot SERVICE PACKAGE, REAR WHEEL CYLINDER . . Part No. 2084 789 Consists of: 2 - 2072 636 Cup 2 - 2072 679 Boot SERVICE PACKAGE, FRONT WHEEL CYLINDER . . Part No. 2275 535 Consists of: 2 - 2260 838 Cup 2 - 2260 840 Boot
5-63-1	Cont'd SERVICE PACKAGE, REAR WHEEL CYLINDER . . . Part No. 2275 536 Consists of: 2 - 2260 844 Cup 2 - 2260 846 Boot SERVICE PACKAGE, WHEEL CYLINDER, REAR . . . Part No. *2421 347 Consists of: 2 - 2072 636 Cup 2 - 2260 846 Boot
5-63-3	PISTON PACKAGE, WHEEL CYLINDER . . . . . Part No. 1818 834 Consists of: 2 - 1136 872 Boot 2 - 1312 830 Piston 2 - 1614 894 Spring 1 - 1633 106 Spring 2 - 1674 080 Cup 2 - 1674 081 Expander PISTON PACKAGE, FRONT WHEEL CYLINDER . . Part No. 2084 790 Consists of: 2 - 1669 337 Cup 1 - 1799 634 Spring 2 - 2072 625 Boot 2 - 2072 655 Piston PISTON PACKAGE, REAR WHEEL CYLINDER . . Part No. 2084 791 Consists of: 2 - 2072 636 Cup 1 - 2072 637 Spring 2 - 2072 656 Piston 2 - 2072 679 Boot PISTON PACKAGE, FRONT WHEEL CYLINDER. . . Part No 2275 539 Consists of: 2 - 2260 837 Piston 2 - 2260 838 Cup 1 - 2260 839 Spring 2 - 2260 840 Boot PISTON PACKAGE, REAR WHEEL CYLINDER . . Part No. 2275 540 Consists of: 1 - 1923 765 Spring 2 - 2260 843 Piston 2 - 2260 844 Cup 2 - 2260 846 Boot PISTON PACKAGE, WHEEL CYLINDER, REAR . . . Part No. *2421 346 Consists of: 2 - 2072 636 Cup 1 - 2072 637 Spring 2 - 2260 846 Boot 2 - 2401 938 Piston
5-100-1	SERVICE PACKAGE, POWER BRAKE . . . . . Part No. 2075 001 Consists of: 1 - ---- --- Diaphragm 1 - ---- --- Disc 1 - ---- --- Filter 1 - ---- --- Guard 1 - ---- --- Poppet 1 - ---- --- Seal

MyMopar.com

CODE	PART NAME AND PART NUMBER
5-100-1	Cont'd SERVICE PACKAGE, POWER BRAKE . . . . . Part No. *2421 082 Consists of: 1 - ---- --- Diaphram Assembly 1 - 2401 163 Seal, Valve Body 1 - 2401 163 Seal, Adaptor Assembly 1 - 2401 166 Retainer Brake Pedal Push Rod 1 - ---- --- Ring, Plunger Cushion 1 - ---- --- Seal, Plunger Assembly 1 - ---- --- Seal, Adaptor 1 - 2401 172 Seal, Plunger Sleeve 1 - ---- --- Valve Assembly 1 - ---- --- Seal, Valve Assembly 1 - ---- --- Ring, Plunger Assembly Retaining 1 - ---- --- Bellows, Valve Body 1 - 2401 855 Filter, Air 1 - 2401 858 Ring, Lever Retaining
5-100-166	RETAINER PACKAGE, POWER BRAKE PLUNGER and PUSH ROD . . . . . Part No. *2421 084 Consists of: 1 - 2401 166 Retainer, Brake Pedal Push Rod 1 - ---- --- Plunger Assembly
5-105-1	CHECK VALVE and WASHER PACKAGE, POWER BRAKE . . . . . Part No. *2421 083 Consists of: 1 - ---- --- Valve, Vacuum Hose Connector Check 1 - 2401 857 Washer, Vacuum Hose Connector
6-01-3	CLUTCH PACKAGE. . . . Part No. 2240 304 Consists of: 1 - ---- --- Cover, w/Pressure Plate 1 - 2200 068 Disc, Driving
	CLUTCH PACKAGE . . . Part No. 2279 893 Consists of: 1 - ---- --- Cover, w/Pressure Plate 1 - ---- --- Disc, Driving 1 - ---- --- Cover, w/Pressure Plate
6-17-3	CLUTCH LEVER PACKAGE . . . . . Part No. 2084 250 Consists of: 3 - ---- --- Eye Bolt, w/Nut 3 - ---- --- Lever 3 - ---- --- Pin 3 - ---- --- Spring 3 - ---- --- Strut
	CLUTCH LEVER PACKAGE . . . . . Part No. 2240 634 Consists of: 1 - ---- --- Eye Bolt, w/Nut 1 - ---- --- Lever 1 - ---- --- Pin 1 - ---- --- Spring 1 - ---- --- Strut
6-17-3	Cont'd CLUTCH LEVER PACKAGE . . . . . Part No. 2279 894 Consists of: 3 - ---- --- Eye Bolt, w/Nut 3 - ---- --- Lever 3 - ---- --- Pin 3 - ---- --- Spring 3 - ---- --- Strut
	CLUTCH LEVER PACKAGE . . . . . Part No. *2298 909 Consists of: 3 - ---- --- Clip 3 - ---- --- Lever 3 - 120 368 Nut 3 - ---- --- Pin 3 - ---- --- Screw 3 - ---- --- Washer, Lever
7-14-10	CLAMP PACKAGE, RADIATOR HOSE . . . . Part No. 1450 499 Consists of: 50 - ---- --- Clamp, Small
	CLAMP PACKAGE, RADIATOR HOSE . . . . Part No. 1450 500 Consists of: 50 - ---- --- Clamp, Large
7-42-1	PUMP PACKAGE, WATER Part No. 1752 422 Consists of: 1 - ---- --- Pump 1 - 2129 013 Gasket
	PUMP PACKAGE, WATER Part No. 1879 526 Consists of: 1 - ---- --- Pump 1 - 1737 705 Gasket
	PUMP PACKAGE, WATER Part No. 1879 536 Consists of: 1 - ---- --- Pump 1 - 1737 705 Gasket
	PUMP PACKAGE, WATER Part No. 2196 910 Consists of: 1 - ---- --- Pump 1 - 1947 521 Gasket
7-42-4	SERVICE PACKAGE, WATER PUMP. . . . . Part No. 1752 435 Consists of: 1 - ---- --- Thrower 1 - 1618 645 Gasket 1 - ---- --- Shaft and Bearing 1 - 1635 783 Impeller 1 - ---- --- Seal and Washer 1 - 2129 013 Gasket
	SERVICE PACKAGE, WATER PUMP . . . . . Part No. 1752 622 Consists of: 1 - ---- --- Thrower 1 - ---- --- Shaft and Bearing

(Pkg. Cont'd)

★ Indicates use as required.
⊟ Indicates parts not listed in any previous parts book.
* Indicates change or addition.

Printed in U.S.A.
Prices and specifications subject to change without notice.
May 1, 1962 Supersedes Nov. 30, 1961.

MyMopar.com

CODE	PART NAME AND PART NUMBER
7-42-4	Cont'd 1 - 1671 894 Gasket 1 - 1673 782 Gasket 1 - 1737 705 Gasket 1 - ---- --- Seal and Washer 1 - 1859 151 Impeller
	SERVICE PACKAGE, WATER PUMP . . . . . Part No. 1843 447 Consists of: 1 - ---- --- Thrower 1 - ---- --- Shaft and Bearing 1 - 1637 724 Impeller 1 - 1671 191 Gasket 1 - 1671 894 Gasket 1 - 1673 782 Gasket 1 - 1737 705 Gasket 1 - ---- --- Seal and Washer
	SERVICE PACKAGE, WATER PUMP. . . . . Part No. 2298 907 Consists of: 1 - 1947 515 Shaft 1 - 1947 521 Gasket 1 - 1947 523 Gasket 1 - 1947 671 Gasket 1 - 2120 955 Seal 1 - ---- --- Impeller
8-05-16	KNOB AND STEM PACKAGE, DOME LAMP SWITCH CONTROL . . . . . Part No. 2275 585 Consists of: 1 - ---- --- Knob, w/Retaining Spring 1 - ---- --- Stem
	KNOB AND STEM PACKAGE, DOME LAMP SWITCH CONTROL . . . . . Part No. 2298 883 Consists of: 1 - ---- --- Knob, w/Retaining Spring 1 - ---- --- Stem
8-27-11	GEAR and PIN PACKAGE TACHOMETER DRIVE . Part No. *2084 869 Consists of: 1 - ---- --- Gear 1 - ---- --- Pin
8-27-18	FOLLOWER GEAR PACKAGE, TACHOMETER . . . . . Part No. *2084 870 Consists of: 1 - ---- --- Cover, Housing 1 - ---- --- Gear 1 - ---- --- Shaft, Drive 1 - ---- --- Washer, Thrust
8-27-77	SPRING and HINGE PACKAGE, DISTRIBUTOR CAP . . . . . Part No. 1879 606 Consists of: 1 - ---- --- Spring, w/Hinge, Locating Clamp 1 - ---- --- Spring, w/Hinge, Clamp

CODE	PART NAME AND PART NUMBER
8-27-85	CONTACT and SPRING PACKAGE, CAP and PLUNGER . . . . . Part No. 1879 594 Consists of: 1 - ---- --- Contact 1 - ---- --- Spring
	CONTACT and SPRING PACKAGE, CAP and PLUNGER . . . . . Part No. 2084 655 Consists of: 1 - ---- --- Contact 1 - ---- --- Spring
8-27-133	BEARING AND THRUST WASHER PACKAGE, DRIVE SHAFT. . . . . Part No. 2275 228 Consists of: 2 - ---- --- Bearing, Shaft 2 - ---- --- Washer, Thrust
	BEARING AND THRUST WASHER PACKAGE, DRIVE SHAFT. . . . . Part No. 2275 229 Consists of: 2 - ---- --- Bearing, Shaft 1 - ---- --- Collar 1 - ---- --- Pin 2 - ---- --- Washer, Thrust
	BEARING PACKAGE, DRIVE SHAFT. . . . . Part No. 1879 596 Consists of: 2 - ---- --- Bearing 1 - ---- --- Collar 1 - ---- --- Pin, Collar 3 - ---- --- Washer
	BEARING and THRUST WASHER PACKAGE, DRIVE SHAFT . . . . . Part No. *2084 867 Consists of: 2 - ---- --- Bearing, Bronze 1 - ---- --- Collar 1 - ---- --- Pin, Collar 2 - ---- --- Washer, Thrust
8-27-137	COLLAR AND PIN PACKAGE, DRIVE SHAFT. . . . . Part No. 2084 448 Consists of: 1 - ---- --- Collar 1 - ---- --- Pin
8-27-208	BREAKER and GROUND LEAD PACKAGE, DISTRIBUTOR. . . . . Part No. 2299 320 Consists of: 1 - ---- --- Lead, Breaker Arm 1 - ---- --- Lead, Ground
8-27-218	STUD and MOUNTING PACKAGE, DISTRIBUTOR TERMINAL . . . . . Part No. 1881 751 Consists of: 1 - ---- --- Nut

(Pkg. Cont'd)

MyMopar.com

CODE	PART NAME AND PART NUMBER
8-27-218	Cont'd
	4 - ---- --- Stud
	1 - ---- --- Washer, Lock
	1 - ---- --- Washer, Plain
8-27-278	WEIGHT PACKAGE, GOVERNOR . . . . . .Part No. 1881 746
	Consists of:
	2 - ---- --- Weight
	WEIGHT PACKAGE, GOVERNOR . . . . . Part No. 1881 945
	Consists of:
	2 - ---- --- Weight
	WEIGHT PACKAGE, GOVERNOR . . . . . Part No. 1881 955
	Consists of:
	2 - ---- --- Weight
8-27-279	SPRING SET, GOVERNOR WEIGHT . . . . . Part No. 1881 949
	Consists of:
	2 - ---- --- Spring
	SPRING SET, GOVERNOR WEIGHT . . . . . Part No. 1881 956
	Consists of:
	2 - ---- --- Spring
	SPRING SET, GOVERNOR WEIGHT . . . . . Part No. 2240 747
	Consists of:
	2 - ---- --- Spring
	SPRING SET, GOVERNOR WEIGHT . . . . . Part No. 1881 946
	Consists of:
	2 - ---- --- Spring
	SPRING SET, GOVERNOR WEIGHT . . . . . Part No. 2298 765
	Consists of:
	2 - ---- --- Spring
	SPRING SET, GOVERNOR WEIGHT . . . . . Part No. 2298 758
	Consists of:
	2 - ---- --- Spring
	SPRING SET, GOVERNOR WEIGHT . . . . . Part No. 2298 759
	Consists of:
	2 - ---- --- Spring
	GOVERNOR WEIGHT SPRING SET PACKAGE . . . . . Part No. 2084 866
	Consists of:
	2 - ---- --- Spring
	GOVERNOR WEIGHT SPRING SET PACKAGE . . . . . Part No. 2275 227
	Consists of:
	2 - ---- --- Spring
	SPRING SET, GOVERNOR WEIGHT . . . . . Part No. *2421 473
	Consists of:
	2 - ---- --- Spring
8-27-297	FELT DISC AND SNAP RING PACKAGE, CAM SLEEVE . . . . . Part No. 1879 607
	Consists of:
	1 - ---- --- Disc, Felt
	1 - ---- --- Snap Ring
8-27-308	VACUUM CHAMBER PACKAGE, DISTRIBUTOR . . . . . Part No. 2084 868
	Consists of:
	1 - ---- --- Chamber, Vacuum
	2 - ---- --- Washer
	VACUUM CHAMBER PACKAGE, DISTRIBUTOR . . . . . Part No. 2084 857
	Consists of:
	1 - ---- --- Chamber, Vacuum
	2 - ---- --- Washer
8-27-315	PLUG and GASKET PACKAGE, VACUUM CHAMBER. . . . . Part No. 2299 319
	Consists of:
	1 - ---- --- Gasket
	1 - ---- --- Plug
8-27-316	SPRING and WASHER PACKAGE, VACUUM CHAMBER. . . . . Part No. 1881 766
	Consists of:
	1 - ---- --- Spring
	2 - ---- --- Washer (.032)
	3 - ---- --- Washer (.010)
	2 - ---- --- Washer (.065)
	SPRING and WASHER PACKAGE, VACUUM CHAMBER. . . . . Part No. 1881 750
	Consists of:
	1 - ---- --- Spring
	2 - ---- --- Washer (.032)
	3 - ---- --- Washer (.010)
	2 - ---- --- Washer (.065)
8-27-352	GEAR AND PIN PACKAGE, DRIVE . . . . . Part No. 2084 653
	Consists of:
	1 - ---- --- Gear
	1 - 9414 181 Pin
	1 - ---- --- Washer
8-29-17	BRUSHES, WASHER AND TERMINAL PACKAGE . Part No. 2084 673
	Consists of:
	2 - ---- --- Brush
	1 - ---- --- Terminal, Field
	1 - ---- --- Washer, Insulator
8-29-129	CAPACITOR AND BOLT PACKAGE . . . . . Part No. *2421 137
	Consists of:
	1 - ---- --- Capacitor, w/Bolt
	2 - ---- --- Insulator
	2 - ---- --- Nut
	2 - ---- --- Washer, Lock
	1 - ---- --- Washer, Plain
8-29-145	SPACER PACKAGE, HEAT SINK . . . . . Part No. *2421 138
	Consists of:
	2 - ---- --- Spacer
8-33-39	BUSHING PACKAGE, HORN RING SPACER. . . . . Part No. 2240 608
	Consists of:
	4 - ---- --- Bushing
	4 - 1325 906 Screw

★ Indicates use as required.
⊟ Indicates parts not listed in any previous parts book.
* Indicates change or addition.

Printed in U.S.A.
Prices and specifications subject to change without notice.

May 1, 1962 Supersedes Nov. 30, 1961.

MyMopar.com

CODE	PART NAME AND PART NUMBER
8-36-1	CABLE PACKAGE, MOPAR IGNITION, RESITOR TYPE . . . . . Part No. 2084 065 Consists of: 1 - ---- --- Cable 1 - 2095 766 Nipple 1 - 1717 314 Terminal
	CABLE PACKAGE, MOPAR IGNITION, RESISTOR TYPE . . . . . Part No. 2084 064 Consists of: 1 - ---- --- Cable 1 - 2095 766 Nipple 1 - 1717 314 Terminal
	CABLE PACKAGE, MOPAR IGNITION, RESISTOR TYPE . . . . . Part No. 2084 458 Consists of: 1 - ---- --- Cable 1 - 2095 766 Nipple 1 - 1717 314 Terminal
	SET, MOPAR IGNITION CABLE, RESISTOR TYPE . . . . . Part No. 2084 217 Consists of: 9 - ---- --- Cable 9 - 2095 766 Nipple, Distributor Terminal 1 - 2095 768 Nipple, Coil Tower Terminal 10 - 1717 314 Terminal, Distributor
	CABLE PACKAGE, MOPAR IGNITION, RESISTOR TYPE . . . . . Part No. 2084 645 Consists of: 1 - ---- --- Cable 1 - 2095 766 Nipple 1 - 1717 314 Terminal
	SET, MOPAR IGNITION CABLE, RESISTOR TYPE . . . . . Part No. 2279 899 Consists of: 9 - ---- --- Cable 9 - 2095 766 Nipple, Distributor Terminal 1 - 2095 768 Nipple, Coil Tower Terminal 10 - 1717 314 Terminal, Distributor
	SET, MOPAR IGNITION CABLE, RESISTOR TYPE . . . . . Part No. 2084 219 Consists of: 9 - ---- --- Cable 9 - 2095 766 Nipple, Distributor Terminal 1 - 2095 768 Nipple, Coil Tower Terminal 10 - 1717 314 Terminal, Distributor
	SET, MOPAR IGNITION CABLE, RESISTOR TYPE . . . . . Part No. 2275 739 Consists of: 7 - ---- --- Cable 4 - 2095 766 Nipple, Distributor Terminal 1 - 2095 768 Nipple, Coil Tower Terminal 5 - 1717 314 Terminal, Distributor
8-36-1 Cont'd	SET, MOPAR IGNITION CABLE, RESISTOR TYPE . . . . . Part No. 2275 438 Consists of: 7 - ---- --- Cable 4 - 2095 766 Nipple, Distributor Terminal 4 - 1717 314 Terminal, Distributor
	CABLE PACKAGE, MOPAR IGNITION, RESISTOR . Part No. *2084 456 Consists of: 1 - ---- --- Cable 1 - 2095 766 Nipple 1 - 1717 314 Terminal
	CABLE PACKAGE, MOPAR IGNITION, RESISTOR . . Part No. *2196 335 Consists of: 1 - ---- --- Cable 1 - 2095 766 Nipple 1 - 1717 314 Terminal
8-36-49	CABLE PACKAGE, COIL SECONDARY, w/15" CABLE . . . . . Part No. 2084 427 Consists of: 1 - ---- --- Cable 1 - 2095 766 Nipple, Distributor Terminal 1 - 2095 768 Nipple, Coil Terminal 2 - 1717 314 Terminal
	CABLE PACKAGE, COIL SECONDARY, EXCEPT 15" CABLE . . . . . Part No. 2084 428 Consists of: 1 - ---- --- Cable 1 - 2095 766 Nipple, Distributor Terminal 1 - 2095 768 Nipple, Coil Terminal 2 - 1717 314 Terminal
8-37-177	HOUSING AND LENS PACKAGE, INSTRUMENT CLUSTER . . . . . Part No. 2084 072 Consists of: 1 - ---- --- Housing, Instrument Cluster 1 - ---- --- Lens, Hand Brake Signal Lamp 1 - ---- --- Lens, Instrument Cluster 1 - ---- --- Retainer, Hand Brake Signal Lamp Socket
8-37-373	HOUSING PACKAGE, SPEEDOMETER INSTRUMENTS and CONTROL . . . . . Part No. *2299 316 Consists of: 1 - ---- --- Gasket 2 - ---- --- Grommet 1 - ---- --- Housing 2 - ---- --- Spacer 2 - ---- --- Screw
8-50-103	ARM PACKAGE, TURN SIGNAL SWITCH OPERATING . . Part No. 2240 250 Consists of: 1 - ---- --- Arm 1 - 1972 207 Pivot 1 - ---- --- Spring

MyMopar.com

CODE	PART NAME AND PART NUMBER
8-50-304	LAMP PACKAGE, PARKING AND TURN SIGNAL . . . Part No. 2240 263 Consists of: 1 - 2188 277 Bezel, Lamp 1 - 2188 280 Gasket, Lens to Housing 1 - ---- --- Housing 1 - 2188 279 Lens 1 - 9414 111 Screw, Lens to Housing, Upper 1 - 9415 912 Screw, Lens to Housing, Lower 2 - ---- --- Screw, Housing to Front Fender Lower Extension
8-50-334	LENS AND GASKET PACKAGE, PARKING AND TURN SIGNAL LAMP, RIGHT. . . . . Part No. 2275 212 Consists of: 1 - 2093 350 Gasket, Lens 1 - ---- --- Lens
	LENS AND GASKET PACKAGE, PARKING AND TURN SIGNAL LAMP, LEFT . . . . . Part No. 2275 211 Consists of: 1 - 2093 350 Gasket, Lens 1 - ---- --- Lens
	LENS AND GASKET PACKAGE, PARKING AND TURN SIGNAL LAMP, RIGHT. . . . . Part No. 2279 930 Consists of: 1 - 2189 420 Gasket, Lens 1 - ---- --- Lens
	LENS AND GASKET PACKAGE, PARKING AND TURN SIGNAL LAMP, LEFT . . . . . Part No. 2279 931 Consists of: 1 - 2189 420 Gasket, Lens 1 - ---- --- Lens
	LENS AND GASKET PACKAGE, PARKING AND TURN SIGNAL LAMP, RIGHT . . . . . Part No. 2240 742 Consists of: 1 - 2188 864 Gasket, Lens 1 - ---- --- Lens
	LENS AND GASKET PACKAGE, PARKING AND TURN SIGNAL LAMP, LEFT . . . . . Part No. 2240 743 Consists of: 1 - 2188 864 Gasket, Lens 1 - ---- --- Lens
8-52-49	FORK AND PIN PACKAGE, SHIFTING . . . . . Part No. 2084 093 Consists of: 1 - ---- --- Fork, Shifting 1 - 456 098 Pin, Roll
8-52-82	STOP, SNAP RING AND STOP WASHER PACKAGE, PINION . . . . . Part No. 1881 727 Consists of: 1 - 1752 375 Ring, Pinion Stop Snap 1 - ---- --- Stop, Pinion
8-52-87	ACTUATOR AND RETAINING RING PACKAGE, CLUTCH SHIFTING . . . . . Part No. 2275 556 Consists of: 2 - ---- --- Actuator, Clutch Shifting 1 - 2095 130 Ring, Clutch Actuator Retaining
8-52-96	GEAR AND SNAP RING PACKAGE, PINION SHAFT. . . . . Part No. 2275 557 Consists of: 1 - ---- --- Gear, Pinion Shaft 1 - 2095 117 Snap Ring, Pinion Shaft Gear Retaining 1 - ---- --- Washer, Pinion Shaft Gear Friction
8-52-98	THRUST WASHER AND RETAINING RING PACKAGE, PINION SHAFT . . . . . Part No. 2275 558 Consists of: 1 - 6022 006 Ring, Pinion Shaft Retaining 2 - ---- --- Washer, Pinion Shaft Thrust
8-52-121	THRUST WASHER PACKAGE, ARMATURE . . . . . Part No. 2275 555 6 - ---- --- Washer
8-52-135	BRUSH PACKAGE . . . . Part No. 2240 749 Consists of: 2 - ---- --- Brush
8-52-137	PLATE AND BRUSH PACKAGE, BRUSH HOLDER . . . . Part No. 2275 550 Consists of: 1 - ---- --- Brush, w/Terminal, Negative 1 - ---- --- Plate, Brush Holder
8-52-140	SPRING PACKAGE, BRUSH . . . . . Part No. 2084 666 Consists of: 4 - 636 841 Spring, Brush
8-52-180	THRUST WASHER PACKAGE, COMMUTATOR END . . Part No. 2240 529 Consists of: 10 - ---- --- Washer
8-52-214	FIELD SERIES AND SHUNT COIL PACKAGE. . . . . Part No. 2084 088 Consists of: 1 - ---- --- Coil, Field Series 1 - ---- --- Coil, Field Shunt
	FIELD SERIES AND SHUNT COIL PACKAGE. . . . . Part No. 2275 248 Consists of: 1 - ---- --- Coil, Field Series 1 - ---- --- Coil, Field Shunt 4 - ---- --- Insulator, Field Pole 1 - ---- --- Rivet, Field Series Coil Ground

★ Indicates use as required.
⊟ Indicates parts not listed in any previous parts book.
* Indicates change or addition.

Printed in U.S.A.
Prices and specifications subject to change without notice.
May 1, 1962 Supersedes Nov. 30, 1961.

MyMopar.com

CODE	PART NAME AND PART NUMBER
8-52-14	Cont'd FIELD SERIES COIL PACKAGE . . . . Part No. *2421 474 Consists of: 1 - ---- --- Coil 4 - ---- --- Insulator 1 - ---- --- Rivet, Ground 1 - ---- --- Washer
8-52-341	CONTACT AND COVER GASKET PACKAGE, SOLENOID . Part No. 2084 091 Consists of: 1 - ---- --- Contact, Solenoid 1 - ---- --- Gasket, Cover 1 - ---- --- Spring, Return 1 - ---- --- Spring, Solenoid Switch, Outer
8-52-342	CONTACT AND SPRING PACKAGE, SOLENOID SWITCH . . . . . Part No. 2275 553 Consists of: 1 - ---- --- Contact, Solenoid Switch 1 - ---- --- Spring, Solenoid Switch, Outer 1 - ---- --- Spring, Return
8-52-344	COVER AND GASKET PACKAGE, SOLENOID . Part No. 2084 090 Consists of: 1 - ---- --- Cover 1 - ---- --- Gasket, Cover
8-52-345	SOLENOID PACKAGE. . . Part No. 2275 554 Consists of: 1 - 120 622 Nut, Hex 1 - ---- --- Retainer, Solenoid Coil 1 - ---- --- Sleeve, Solenoid Coil 1 - ---- --- Solenoid, Starter 1 - ---- --- Washer, Solenoid Coil 1 - ---- --- Washer, Solenoid Terminal Relay Stud Insulating 1 - ---- --- Washer, Solenoid Terminal Relay Stud
8-52-354	STUD PACKAGE, TERMINAL RELAY. . . . . Part No. 2084 094 Consists of: 1 - ---- --- Insulator, Relay Stud 1 - 120 622 Nut, Hex 1 - ---- --- Stud, Solenoid Terminal Relay 1 - 9414 106 Washer, Lock 1 - ---- --- Washer, Relay Stud Spacing STUD PACKAGE, TERMINAL RELAY. . . . . Part No. 2275 552 Consists of: 1 - 120 622 Nut, Hex 1 - ---- --- Stud, Solenoid Terminal Relay 1 - ---- --- Washer, Solenoid Terminal Relay Stud 1 - ---- --- Washer, Solenoid Terminal Relay Stud Insulating
8-53-296	KNOB AND STEM PACKAGE, HEADLAMP AND INSTRUMENT LAMP SWITCH. . Part No. 2275 585 Consists of: 1 - ---- --- Knob, w/Retaining Spring 1 - ---- --- Stem KNOB AND STEM PACKAGE, HEADLAMP AND INSTRUMENT LAMP SWITCH . Part No. 2298 883 Consists of: 1 - ---- --- Knob, w/Retaining Spring 1 - ---- --- Stem
8-55-1	LAMP AND WASHER PACKAGE, TAIL, STOP AND TURN SIGNAL . . . . . Part No. 2298 775 Consists of: 1 - ---- --- Insulator, Wiring Terminal 1 - ---- --- Lamp 2 - 6022 162 Nut and Washer, Mounting 2 - ---- --- Washer, Sealing LAMP AND GASKET PACKAGE, TAIL, STOP AND TURN SIGNAL, RIGHT. . . . . Part No. 2279 919 Consists of: 1 - ---- --- Gasket 1 - ---- --- Lamp LAMP AND GASKET PACKAGE, TAIL, STOP AND TURN SIGNAL, LEFT . . . . . Part No. 2279 920 Consists of: 1 - ---- --- Gasket 1 - ---- --- Lamp LAMP PACKAGE, TAIL . . . . . Part No. *2421 135 Consists of: 1 - ---- --- Bezel 1 - ---- --- Gasket 1 - ---- --- Lens 3 - 9417 621 Nut 2 - ---- --- Screw 2 - ---- --- Seal 1 - ---- --- Wick
8-55-158	BEZEL, LENS AND GASKET PACKAGE, TAIL, STOP AND TURN SIGNAL LAMP . . Part No. 2279 925 Consists of: 1 - ---- --- Bezel, Lens 1 - ---- --- Gasket, Lens 1 - ---- --- Lens BEZEL, LENS AND GASKET PACKAGE, TAIL, STOP AND TURN SIGNAL LAMP . . Part No. 2279 923 Consists of: 1 - ---- --- Bezel, Lens 1 - ---- --- Gasket, Lamp 1 - ---- --- Lens

MyMopar.com

CODE	PART NAME AND PART NUMBER
8-55-158	Cont'd BEZEL, LENS and GASKET PACKAGE, TAIL LAMP . . . . . Part No. *2279 923 Consists of: 1 - ---- --- Bezel 1 - ---- --- Gasket 1 - ---- --- Lens
8-55-194	LENS AND GASKET PACKAGE, TAIL, STOP AND TURN SIGNAL LAMP . . . . . Part No. 2298 774 Consists of: 4 - ---- --- Clip, Lamp Housing Gasket and Lens 1 - ---- --- Gasket, Lamp 1 - ---- --- Gasket, Lens 1 - ---- --- Lens, w/Cap 1 - ---- --- Wick LENS AND GASKET PACKAGE, TAIL, STOP AND TURN SIGNAL LAMP, RIGHT . Part No. 2279 934 Consists of: 1 - 2189 548 Gasket, Lens 1 - ---- --- Lens LENS AND GASKET PACKAGE, TAIL, STOP AND TURN SIGNAL LAMP, LEFT . Part No. 2279 935 Consists of: 1 - 2189 548 Gasket, Lens 1 - ---- --- Lens LENS AND GASKET PACKAGE, TAIL, STOP AND TURN SIGNAL LAMP . . . . . Part No. 2279 922 Consists of: 1 - ---- --- Gasket, Lens 1 - ---- --- Lens, w/Bezel LENS AND GASKET PACKAGE, TAIL, STOP AND TURN SIGNAL LAMP . . . . . Part No. 2298 776 Consists of: 1 - 2189 560 Gasket, Lens 1 - ---- --- Lens, w/Collimator LENS AND GASKET PACKAGE, TAIL, STOP AND TURN SIGNAL LAMP . . . . . Part No. 2279 916 Consists of: 1 - ---- --- Gasket, Lens 1 - ---- --- Lens, w/Bezel LENS AND GASKET PACKAGE, TAIL, STOP AND TURN SIGNAL LAMP . . . . . Part No. 2275 247 Consists of: 1 - ---- --- Gasket, Lens 1 - ---- --- Lens
8-55-335	EXTENSION AND INSERT PACKAGE, TAIL, STOP AND TURN SIGNAL LAMP BEZEL, RIGHT . . . . . Part No. 2279 932 Consists of: 1 - ---- --- Extension, Bezel 1 - ---- --- Insert, Bezel Extension 3 - ---- --- Screw, Mounting
8-55-335	Cont'd EXTENSION AND INSERT PACKAGE, TAIL, STOP AND TURN SIGNAL LAMP BEZEL, LEFT . . . . . Part No. 2279 933 Consists of: 1 - ---- --- Extension, Bezel 1 - ---- --- Insert, Bezel Extension 3 - ---- --- Screw, Mounting
8-56-8	LENS AND GASKET PACKAGE, BACK-UP LAMP . . . . Part No. 2275 246 Consists of: 1 - ---- --- Gasket, Lens to Bezel 1 - ---- --- Lens LENS AND GASKET PACKAGE, BACK-UP LAMP . . . . Part No. 2279 915 Consists of: 1 - 2189 521 Gasket, Lens 1 - ---- --- Lens LENS AND GASKET PACKAGE, BACK-UP LAMP . . . . Part No. 2279 924 Consists of: 1 - ---- --- Gasket, Lens 1 - ---- --- Lens LENS and GASKET PACKAGE, BACK-UP LAMP . . . . Part No. *2299 328 Consists of: 1 - 2252 214 Gasket 1 - ---- --- Lens LENS AND GASKET PACKAGE, BACK-UP LAMP . . . . Part No. 2279 926 Consists of: 1 - ---- --- Gasket, Lens 1 - ---- --- Lens LENS AND GASKET PACKAGE, BACK-UP LAMP . . . . Part No. 2298 773 Consists of: 2 - ---- --- Clip, Housing to Lens 1 - ---- --- Gasket, Lens to Quarter Panel 1 - ---- --- Gasket, Lens to Housing 1 - ---- --- Lens, w/Reflector
8-56-27	SPRING, INSULATOR and CONTACT PACKAGE, BACK-UP LAMP . . . . Part No. *2257 100 Consists of: 1 - ---- --- Contact 1 - ---- --- Insulator 1 - ---- --- Spring
8-56-36	BEZEL AND GASKET PACKAGE, BACK-UP LAMP, RIGHT Part No. 2240 731 Consists of: 1 - ---- --- Bezel 1 - ---- --- Gasket, Bezel BEZEL AND GASKET PACKAGE, BACK-UP LAMP, LEFT Part No. 2240 732 Consists of: 1 - ---- --- Bezel 1 - ---- --- Gasket, Bezel
8-57-54	LENS AND GASKET PACKAGE, LICENSE LAMP. . . . . Part No. 1879 566 Consists of: 1 - ---- --- Gasket, Lens Housing 1 - ---- --- Lens

MyMopar.com

CODE	PART NAME AND PART NUMBER
8-57-89	SPRING, INSULATOR and CONTACT PACKAGES, LICENSE LAMP . . . . Part No. 2257 100 Consists of: 1 - ---- --- Contact 1 - ---- --- Insulator 1 - ---- --- Spring
9-01-5	GASKET SET ENGINE . . Part No. 2196 045 Consists of: 1 - 1945 561 Gasket, Air Cleaner Cover 1 - 1947 797 Gasket, Air Cleaner to Carburetor 1 - 637 191 Gasket, Carburetor Flange 1 - 1947 554 Gasket, Chain Case Cover 1 - 1947 578 Gasket, Cylinder Head 1 - 2121 244 Gasket, Cylinder Head Cover 1 - 1947 671 Gasket, Cylinder Water Outlet Elbow 1 - 2073 792 Gasket, Exhaust Pipe Flange 1 - 1400 185 Gasket, Fuel Pump Flange 1 - ---- --- Gasket, Intake and Exhaust Manifold 1 - ---- --- Gasket, Oil Pan, Front 1 - ---- --- Gasket, Oil Pan, Left 1 - ---- --- Gasket, Oil Pan, Rear 1 - ---- --- Gasket, Oil Pan, Right 1 - 618 622 Gasket, Oil Pressure Relief Valve Cap 1 - 2121 404 Gasket, Oil Pump Body 1 - 1947 521 Gasket, Water Pump Body 1 - 1947 523 Gasket, Water Pump Body Intermediate Plate
	GASKET SET ENGINE, W/ALUMINUM ENGINE . Part No. 2240 628 Consists of: 1 - 1947 797 Gasket, Air Cleaner to Carburetor 1 - 1947 554 Gasket, Chain Case Cover 1 - 2128 279 Gasket, Cylinder Head 1 - 2121 244 Gasket, Cylinder Head Cover 1 - 1947 671 Gasket, Cylinder Water Outlet Elbow 1 - 2073 792 Gasket, Exhaust Pipe Flange 1 - 1400 185 Gasket, Fuel Pump Flange 1 - 1947 762 Gasket, Intake and Exhaust Manifold 1 - 2268 264 Gasket, Intake to Exhaust Manifold 1 - ---- --- Gasket, Oil Pan, Front 1 - ---- --- Gasket, Oil Pan, Left 1 - ---- --- Gasket, Oil Pan, Rear 1 - ---- --- Gasket, Oil Pan, Right 1 - 618 622 Gasket, Oil Pressure Relief Valve Cap 1 - 2121 404 Gasket, Oil Pump Body 1 - 1947 521 Gasket, Water Pump Body 1 - 1947 523 Gasket, Water Pump Body Intermediate Plate
	GASKET SET, ENGINE . Part No. 2196 087 Consists of: 1 - 2129 012 Gasket, Chain Case Cover 2 - 2129 655 Gasket, Cylinder Head (Pkg. Cont'd)

CODE	PART NAME AND PART NUMBER
9-01-5	Cont'd 2 - 2128 407 Gasket, Cylinder Head Cover 1 - ---- --- Gasket, Cylinder Water Outlet 2 - 1636 570 Gasket, Exhaust Pipe Flange 1 - 1400 185 Gasket, Fuel Pump Flange 1 - 1326 836 Gasket, Ignition Distributor 2 - ---- --- Gasket, Intake Manifold 1 - ---- --- Gasket, Intake Manifold-Front 1 - ---- --- Gasket, Intake Manifold-Rear 2 - ---- --- Gasket, Oil Pan 2 - ---- --- Gasket, Oil Pan-End 1 - 2129 013 Gasket, Water Pump Body
	GASKET SET, ENGINE . Part No. 2279 976 Consists of: 1 - 2264 794 Gasket, Chain Case Cover 2 - 1851 579 Gasket, Cylinder Head 2 - 1821 440 Gasket, Cylinder Head Cover 1 - 50 082 Gasket, Cylinder Water Outlet Elbow 2 - 1855 029 Gasket, Exhaust Pipe Flange 2 - 1821 640 Gasket, Exhaust Pipe Flange 1 - 1400 185 Gasket, Fuel Pump Flange 1 - 1326 836 Gasket, Ignition Distributor 1 - 1737 709 Gasket, Intake Manifold 1 - 1737 770 Gasket, Oil Pan 1 - 618 622 Gasket, Oil Pressure Relief Valve Cap 1 - 1737 705 Gasket, Water Pump Body 2 - 1737 761 Gasket, Water Pump to Cylinder Block
	GASKET SET, ENGINE . Part No. 1879 702 Consists of: 1 - 1737 763 Gasket, Chain Case Cover 2 - 1851 579 Gasket, Cylinder Head 2 - 1821 440 Gasket, Cylinder Head Cover 1 - 50 082 Gasket, Cylinder Water Outlet Elbow 2 - 1821 640 Gasket, Exhaust Pipe Flange 2 - 1855 029 Gasket, Exhaust Pipe Flange 1 - 1400 185 Gasket, Fuel Pump Flange 1 - 1326 836 Gasket, Ignition Distributor 1 - 1851 664 Gasket, Intake Manifold 1 - 1737 770 Gasket, Oil Pan 1 - 618 622 Gasket, Oil Pressure Relief Valve Cap 1 - 1737 705 Gasket, Water Pump Body 2 - 1737 761 Gasket, Water Pump to Cylinder Block
	GASKET SET, ENGINE. . Part No. *2421 364 Consists of: 1 - 2264 794 Gasket, Chain Case Cover 2 - 1859 429 Gasket, Cylinder Head 2 - 1821 440 Gasket, Cylinder Head Cover 1 - 50 082 Gasket, Cylinder Water Outlet Elbow 2 - 2401 577 Gasket, Exhaust Pipe Flange 1 - 1400 185 Gasket, Fuel Pump Flange 2 - 2402 380 Gasket, Intake Manifold Center 1 - 1326 836 Gasket, Ignition Distributor (Pkg. Cont'd)

★ Indicates use as required.
⊟ Indicates parts not listed in any previous parts book.
March 8, 1963 Supersedes May 1, 1962.

Printed in U.S.A.
Prices and specifications subject to change without notice.
* Indicates change or addition.

MyMopar.com

CODE	PART NAME AND PART NUMBER
9-01-5	Cont'd 2 - 2402 379 Gasket, Intake Manifold End 1 - 1737 770 Gasket, Oil Pan 1 - 618 622 Gasket, Oil Pressure Relief Valve Cap 1 - 1737 705 Gasket, Water Pump Body 2 - 1737 761 Gasket, Water Pump Housing to Cylinder Block
9-10-2	OIL SEAL PACKAGE, CRANKSHAFT BEARING NO. 5 CAP . . . . . Part No. 1326 091 Consists of: 1 - ---- --- Oil Seal, Left 1 - ---- --- Oil Seal, Right
9-11-1	OIL SEAL PACKAGE, CRANKSHAFT REAR BEARING . . . . . Part No. 1326 093 Consists of: 2 - ---- --- Oil Seal, Bearing 1 - ---- --- Oil Seal, Bearing Cap, Right 1 - ---- --- Oil Seal, Bearing Cap, Left
	OIL SEAL PACKAGE, CRANKSHAFT REAR BEARING . . . . . Part No. 2084 411 Consists of: 1 - ---- --- Gasket, Cap, Right 1 - ---- --- Gasket, Cap, Left 2 - ---- --- Oil Seal
	OIL SEAL PACKAGE, CRANKSHAFT REAR BEARING . . . . . Part No. 2240 650 Consists of: 2 - ---- --- Oil Seal, Bearing 1 - ---- --- Oil Seal, Bearing, Upper 2 - ---- --- Seal, Bearing Retainer, Upper 2 - ---- --- Seal, Bearing Retainer, Lower
	OIL RETAINER and SEAL PACKAGE, CRANKSHAFT BEARING . . . . . Part No. 2240 651 Consists of: 1 - ---- --- Retainer, Bearing Oil Seal Upper 1 - ---- --- Seal, Bearing Oil, Upper
	OIL SEAL PACKAGE, CRANKSHAFT REAR BEARING . . . . . Part No. 2275 365 Consists of: 2 - ---- --- Oil Seal, Rear Bearing 2 - ---- --- Oil Seal, Rear Bearing Retainer
9-39-1	GASKET PACKAGE, VALVE GRIND . . . . . Part No. 2196 046 Consists of: 1 - 1947 578 Gasket, Cylinder Head 1 - 2121 244 Gasket, Cylinder Head Cover 1 - 2073 792 Gasket, Exhaust Pipe Flange
9-39-1	Cont'd GASKET PACKAGE, VALVE GRIND . . . . . Part No. 2196 086 Consists of: 2 - 2129 655 Gasket, Cylinder Head 2 - 2128 407 Gasket, Cylinder Head Cover 2 - ---- --- Gasket, Exhaust Pipe Flange 2 - ---- --- Gasket, Intake Manifold 1 - ---- --- Gasket, Intake Manifold, Front 1 - ---- --- Gasket, Intake Manifold, Rear
	GASKET PACKAGE, VALVE GRIND . . . . . Part No. 1879 703 Consists of: 2 - 1851 579 Gasket, Cylinder Head 2 - 1821 440 Gasket, Cylinder Head Cover 2 - 1821 640 Gasket, Exhaust Pipe Flange 2 - 1855 029 Gasket, Exhaust Pipe Flange 1 - 1737 709 Gasket, Intake Manifold 2 - 1737 761 Gasket, Water Pump to Cyl. Block
	GASKET PACKAGE, VALVE GRIND . . . . . Part No. 1879 704 Consists of: 2 - 1851 579 Gasket, Cylinder Head 2 - 1821 440 Gasket, Cylinder Head Cover 2 - 1821 640 Gasket, Exhaust Pipe Flange 2 - 1855 029 Gasket, Exhaust Pipe Flange 2 - 1851 664 Gasket, Intake Manifold 2 - 1737 761 Gasket, Water Pump to Cylinder Block
	GASKET PACKAGE, VALVE GRIND . . . . . Part No. *2421 365 Consists of: 2 - 1859 429 Gasket, Cylinder Head 2 - 1821 440 Gasket, Cylinder Head Cover 2 - 2401 577 Gasket, Exhause Pipe Flange 2 - 2402 380 Gasket, Intake Manifold Center 2 - 2402 379 Gasket, Intake Manifold End 2 - 1737 761 Gasket, Water Pump
9-41-1	SILENCER PACKAGE, TAPPET CHAMBER . . Part No. 1879 747 Consists of: 1 - ---- --- Silencer, Front 1 - ---- --- Silencer, Rear
9-50-1	GASKET SET, MANIFOLD . . . . . Part No. 2084 416 Consists of: 1 - ---- --- Gasket, Intake and Exhaust Manifold 1 - ---- --- Gasket, Intake to Exhaust Manifold

★ Indicates use as required.
⊟ Indicates parts not listed in any previous parts book.
* Indicates change or addition.

Printed in U.S.A.
Prices and specifications subject to change without notice.
March 8, 1963 Supersedes May 1, 1962.

MyMopar.com

CODE	PART NAME AND PART NUMBER
9-50-1	Cont'd GASKET SET, MANIFOLD . . . . . Part No. 2084 347 Consists of: 2 - ---- --- Gasket, Intake Manifold 1 - ---- --- Gasket, Intake Manifold, Front 1 - ---- --- Gasket, Intake Manifold, Rear
	GASKET PACKAGE, INTAKE MANIFOLD . . . . . Part No. *2421 363 Consists of: 2 - ---- --- Gasket, Intake Manifold Center 2 - ---- --- Gasket, Intake Manifold End
9-58-1	HEAT CONTROL PACKAGE, MANIFOLD. Part No. 2084 797 Consists of: 1 - 1736 012 Bolt, Valve Clamp 2 - ---- --- Bushing 1 - 2121 430 Counterweight 1 - 1409 594 Lock, Counterweight 1 - 120 614 Nut, Valve Clamp 1 - ---- --- Plate 2 - 148 148 Retainer, Shaft 1 - ---- --- Shaft 1 - 1558 897 Spring, Valve 1 - 2121 455 Stop 1 - 2121 554 Thermostat
	HEAT CONTROL PACKAGE, MANIFOLD . Part No. 2084 794 Consists of: 1 - 1736 012 Bolt, Shield Clamp 2 - ---- --- Bushing 1 - 1409 594 Lock, Shield 1 - 120 614 Nut, Shield Clamp Bolt 1 - ---- --- Plate 2 - 148 148 Retainer, Shaft 1 - ---- --- Shaft 1 - 1670 515 Shield, Thermostat 1 - 1558 897 Spring, Valve 1 - 683 057 Stop 1 - 960 003 Thermostat
	HEAT CONTROL PACKAGE, MANIFOLD. Part No. 2240 684 Consists of: 1 - 862 830 Bolt, Shield Clamp 2 - ---- --- Bushing 1 - 1409 594 Lock, Shield 1 - 120 614 Nut, Shield Clamp Bolt 1 - ---- --- Plate 2 - 148 148 Retainer, Shaft 1 - ---- --- Shaft 1 - 1670 515 Shield, Thermostat 1 - 1558 897 Spring, Valve 1 - 683 057 Stop 1 - 960 003 Thermostat
	HEAT CONTROL PACKAGE, MANIFOLD. Part No. 2279 887 Consists of: 1 - 862 830 Bolt, Shield Clamp (Pkg. Cont'd)
9-58-1	Cont'd 2 - ---- --- Bushing 2 - ---- --- Bushing 1 - 1409 594 Lock, Shield 1 - 120 614 Nut, Shield Clamp Bolt 1 - ---- --- Plate 2 - 148 148 Retainer, Shaft 1 - ---- --- Shaft 1 - 1944 616 Shield, Thermostat 1 - 1558 897 Spring, Valve 1 - 683 057 Stop 1 - 2128 933 Thermostat
10-07-2	GASKET and SEAL PACKAGE, OIL PUMP . . . . . Part No. 2084 355 Consists of: 3 - ---- --- Gasket 1 - ---- --- Seal
10-07-3	SHAFT and ROTOR PACKAGE, OIL PUMP DRIVE . . . Part No. 2084 415 Consists of: 1 - ---- --- Rotor, Outer 1 - ---- --- Shaft, Drive
	SHAFT and ROTOR PACKAGE, OIL PUMP DRIVE . . Part No. 2084 354 Consists of: 1 - ---- --- Rotor, Outer 1 - ---- --- Shaft, Drive
10-23-7	OIL PUMP, SUCTION PIPE and STRAINER PACKAGE . Part No. *2448 382 Consists of: 1 - ---- --- Pipe, Oil Pump Suction 1 - 2406 678 Strainer, Oil Pump
10-24-1	GASKET PACKAGE, OIL PAN . . . . . Part No. 2240 647 Consists of: 1 - ---- --- Gasket, Oil Pan, Right 1 - ---- --- Gasket, Oil Pan, Left 1 - ---- --- Gasket, Oil Pan, Front 1 - ---- --- Gasket, Oil Pan, Rear
	GASKET PACKAGE, OIL PAN . . . . . Part No. 1879 520 Consists of: 2 - ---- --- Gasket, Oil Pan, Side 2 - ---- --- Gasket, Oil Pan, End
10-26-8	CARTRIDGE, OIL FILTER . . . . . Part No. 2129 023 Consists of: 1 - ---- --- Cartridge, Oil Filter 5 - ---- --- Gasket
11-02-1	CLAMP PACKAGE, MUFFLER . . . . . Part No. 1843 009 Consists of: 2 - 120 214 Lockwasher 2 - 120 376 Nut 1 - ---- --- Saddle 1 - ---- --- U-Bolt

MyMopar.com

CODE	PART NAME AND PART NUMBER
11-02-1	Cont'd CLAMP PACKAGE, EXHAUST . . . . . Part No. 1843 010 Consists of: 2 - 120 214 Lockwasher 2 - 120 368 Nut 1 - ---- --- Saddle 1 - ---- --- U-Bolt
	CLAMP PACKAGE, EXHAUST . . . . . Part No. 1843 008 Consists of: 2 - 120 214 Lockwasher 2 - 120 376 Nut 1 - ---- --- Saddle 1 - ---- --- U-Bolt
	CLAMP PACKAGE, EXHAUST . . . . . Part No. 1843 407 Consists of: 2 - 120 214 Lockwasher 2 - 120 376 Nut 2 - 120 387 Plainwasher 1 - ---- --- Saddle 1 - ---- --- U-Bolt

CODE	PART NAME AND PART NUMBER
11-02-1	Cont'd CLAMP PACKAGE, MUFFLER . . . . . Part No. 1603 364 Consists of: 2 - 120 214 Lockwasher 2 - 120 376 Nut 1 - ---- --- Saddle 1 - ---- --- U-Bolt
	CLAMP PACKAGE, TAIL PIPE . . . . . Part No. 2240 312 Consists of: 1 - 181 614 Bolt 1 - ---- --- Clamp 1 - 120 214 Lockwasher 1 - 120 368 Nut 1 - 120 387 Plainwasher
13-72-4	BAR and BASE PACKAGE, BUMPER JACK . . . . . Part No. 2275 450 Consists of: 1 - ---- --- Bar 1 - ---- --- Base

★ Indicates use as required.
⊟ Indicates parts not listed in any previous parts book.
* Indicates change or addition.

Printed in U.S.A.
Prices and specifications subject to change without notice.
March 8, 1963.

MyMopar.com

CODE	PART NAME AND PART NUMBER	CODE	PART NAME AND PART NUMBER

NOTES

★ Indicates use as required.
⊟ Indicates parts not listed in any previous parts book.
March 8, 1963.

Printed in U.S.A.
Prices and specifications subject to change without notice.
* Indicates change or addition.

MyMopar.com

CODE	PART NAME AND PART NUMBER
14-30-4	REPAIR PACKAGE, CARBURETOR . . . . . Part No. 2196 246 Consists of: 1 - ---- --- Gasket, Body 1 - ---- --- Gasket, Body Flange 1 - ---- --- Gasket, Flange 1 - ---- --- Gasket, Step-Up Piston 1 - ---- --- Jet, Main Metering 1 - ---- --- Needle, w/Seat 1 - ---- --- Plug, High Speed Passage 1 - ---- --- Plunger, w/Rod 1 - ---- --- Spring, Step-Up Piston 1 - ---- --- Tube, Idle Orifice, w/Plug 1 - ---- --- Tube, Main Vent
	REPAIR PACKAGE, CARBURETOR . . . . . Part No. 2240 465 Consists of: 1 - ---- --- Gasket, Air Cleaner 1 - ---- --- Gasket, Air Horn 1 - ---- --- Gasket, Flange 1 - ---- --- Gasket, Pump Jet Housing 2 - ---- --- Gasket, Venturi Cluster, Primary 2 - ---- --- Gasket, Venturi Cluster, Secondary 2 - ---- --- Jet, Metering Rod, Primary 2 - ---- --- Needle, w/Seat 1 - ---- --- Plunger, Pump 2 - ---- --- Rod, Step-Up 2 - ---- --- Spring, Vacuum Piston
	REPAIR PACKAGE, CARBURETOR . . . . . Part No. 2240 467 Consists of: 1 - ---- --- Gasket, Air Cleaner 1 - ---- --- Gasket, Air Horn 1 - ---- --- Gasket, Flange 2 - ---- --- Gasket, Primary Vent Cluster 1 - ---- --- Gasket, Pump Jet Housing 2 - ---- --- Gasket, Secondary Vent Cluster 2 - ---- --- Jet, Metering Rod, Primary 2 - ---- --- Needle, w/Seat 1 - ---- --- Plunger, Pump 2 - ---- --- Rod, Step-Up 2 - ---- --- Spring, Vacuum Piston
	REPAIR PACKAGE, CARBURETOR . . . . . Part No. 2240 471 Consists of: 1 - ---- --- Gasket, Body 1 - ---- --- Gasket, Body Flange 1 - ---- --- Gasket, Flange 1 - ---- --- Gasket, Step-Up Piston 1 - ---- --- Jet, Main Metering 1 - ---- --- Needle, w/Seat 1 - ---- --- Plug, High Speed Passage Rivet 1 - ---- --- Plunger, Pump 1 - ---- --- Spring, Step-Up Piston 1 - ---- --- Tube, Idle Orifice, w/Plug 1 - ---- --- Tube, Main Vent
14-30-4	Cont'd REPAIR PACKAGE, CARBURETOR . . . . . Part No. 2240 475 Consists of: 1 - ---- --- Gasket, Air Cleaner 1 - ---- --- Gasket, Air Horn 1 - ---- --- Gasket, Flange 1 - ---- --- Gasket, Primary Vent. Cluster 2 - ---- --- Gasket, Pump Jet Housing 2 - ---- --- Gasket, Secondary Vent. 2 - ---- --- Jet, Metering Rod, Primary 2 - ---- --- Needle, w/Seat 1 - ---- --- Plunger, Pump 2 - ---- --- Rod, Step-Up 2 - ---- --- Spring, Vacuum Piston
	REPAIR PACKAGE, CARBURETOR . . . . . Part No. 2240 477 Consists of: 1 - ---- --- Gasket, Air Cleaner 1 - ---- --- Gasket, Body 1 - ---- --- Gasket, Body Flange 1 - ---- --- Gasket, Flange 1 - ---- --- Gasket, Step-Up Piston 1 - ---- --- Gasket, Venturi Cover 1 - ---- --- Gasket, Venturi Housing 2 - ---- --- Jet, Main Metering 1 - ---- --- Needle, w/Seat 1 - ---- --- Plunger, Pump 1 - ---- --- Spring, Step-Up Piston
	REPAIR PACKAGE, CARBURETOR . . . . . Part No. 2240 496 Consists of: 1 - ---- --- Gasket, Air Cleaner 1 - ---- --- Gasket, Body 1 - ---- --- Gasket, Body Flange 1 - ---- --- Gasket, Flange 1 - ---- --- Gasket, Step-Up Piston 1 - ---- --- Gasket, Venturi Cover 1 - ---- --- Gasket, Venturi Housing 2 - ---- --- Jet, Main Metering 1 - ---- --- Needle, w/Seat 1 - ---- --- Plunger, Pump 1 - ---- --- Spring, Step-Up Piston
	REPAIR PACKAGE, CARBURETOR . . . . . Part No. 2240 498 Consists of: 1 - ---- --- Gasket, Air Cleaner 1 - ---- --- Gasket, Air Horn 1 - ---- --- Gasket, Flange 2 - ---- --- Gasket, Primary Vent. Cluster 1 - ---- --- Gasket, Pump Jet Housing 2 - ---- --- Gasket, Secondary Vent. Cluster 2 - ---- --- Jet, Metering Rod, Primary 2 - ---- --- Needle, w/Seat 1 - ---- --- Plunger, Pump 2 - ---- --- Rod, Step-Up 2 - ---- --- Spring, Vacuum Piston

★ Indicates use as required.
⊟ Indicates parts not listed in any previous parts book.
* Indicates change or addition.

Printed in U.S.A.
Prices and specifications subject to change without notice.
May 1, 1962 Supersedes Nov. 30, 1961.

MyMopar.com

CODE	PART NAME AND PART NUMBER

14-30-4 Cont'd

REPAIR PACKAGE,
CARBURETOR . . . . . Part No. 2275 251
Consists of:
1 - ---- --- Gasket, Air Cleaner
1 - ---- --- Gasket, Air Horn
1 - ---- --- Gasket, Flange
1 - ---- --- Gasket, Primary Vent. Cluster
2 - ---- --- Gasket, Pump Jet Housing
2 - ---- --- Gasket, Secondary Vent.
2 - ---- --- Jet, Metering Rod, Primary
2 - ---- --- Needle, w/Seat
1 - ---- --- Plunger, Pump
2 - ---- --- Rod, Step-Up
2 - ---- --- Spring, Vacuum Piston

REPAIR PACKAGE,
CARBURETOR . . . . . Part No. 2275 253
Consists of:
1 - ---- --- Gasket, Air Cleaner
1 - ---- --- Gasket, Air Horn
1 - ---- --- Gasket, Flange
1 - ---- --- Gasket, Primary Vent. Cluster
2 - ---- --- Gasket, Pump Jet Housing
2 - ---- --- Gasket, Secondary Vent.
2 - ---- --- Jet, Metering Rod, Primary
2 - ---- --- Needle, w/Seat
1 - ---- --- Plunger, Pump
2 - ---- --- Rod, Step-Up
2 - ---- --- Spring, Vacuum Piston

REPAIR PACKAGE,
CARBURETOR . . . . . Part No. 2299 003
Consists of:
1 - ---- --- Gasket, Body
1 - ---- --- Gasket, Body Flange
1 - ---- --- Gasket, Flange
1 - ---- --- Gasket, Step-Up Piston
1 - ---- --- Jet, Main Metering
1 - ---- --- Needle, w/Seat
1 - ---- --- Plug, High Speed Passage Rivet
1 - ---- --- Plunger, Pump
1 - ---- --- Spring, Step-Up Piston
1 - ---- --- Tube, Idle Orifice, w/Plug
1 - ---- --- Tube, Main Vent

REPAIR PACKAGE,
CARBURETOR . . . . . Part No. 2299 007
Consists of:
1 - ---- --- Gasket, Body
1 - ---- --- Gasket, Body Flange
1 - ---- --- Gasket, Flange
1 - ---- --- Gasket, Step-Up Piston
1 - ---- --- Jet, Main Metering
1 - ---- --- Needle, w/Seat
1 - ---- --- Plug, High Speed Passage Rivet
1 - ---- --- Spring, Step-Up Piston

(Pkg. Cont'd)

CODE	PART NAME AND PART NUMBER

14-30-4 Cont'd

1 - ---- --- Tube, Idle Orifice, w/Plug
1 - ---- --- Tube, Main Vent
1 - ---- --- Plunger, Pump

REPAIR PACKAGE,
CARBURETOR . . . . . Part No. 2299 017
Consists of:
1 - ---- --- Gasket, Body
1 - ---- --- Gasket, Body Flange
1 - ---- --- Gasket, Flange
1 - ---- --- Gasket, Step-Up Piston
1 - ---- --- Jet, Main Metering
1 - ---- --- Needle, w/Seat
1 - ---- --- Plug, High Speed Passage Rivet
1 - ---- --- Spring, Step-Up Piston
1 - ---- --- Tube, Idle Orifice, w/Plug
1 - ---- --- Tube, Main Vent.
1 - ---- --- Plunger, Pump

REPAIR PACKAGE,
CARBURETOR . . . . . Part No. 2299 057
Consists of:
1 - ---- --- Gasket, Air Horn
1 - ---- --- Gasket, Flange
1 - ---- --- Gasket, Primary Vent. Cluster
2 - ---- --- Gasket, Pump Jet Housing
2 - ---- --- Gasket, Secondary Vent.
2 - ---- --- Jet, Metering Rod, Primary
2 - ---- --- Needle, w/Seat
1 - ---- --- Plunger, Pump
2 - ---- --- Rod, Step-Up
2 - ---- --- Spring, Vacuum Piston

REPAIR PACKAGE,
CARBURETOR . . . . . Part No. 2299 060
Consists of:
1 - ---- --- Gasket, Air Horn
1 - ---- --- Gasket, Flange
2 - ---- --- Gasket, Primary Vent. Cluster
1 - ---- --- Gasket, Pump Jet Housing
2 - ---- --- Gasket, Secondary Vent. Cluster
2 - ---- --- Jet, Metering Rod
2 - ---- --- Needle, w/Seat
1 - ---- --- Plunger, Pump
2 - ---- --- Rod, Step-Up
2 - ---- --- Spring, Vacuum Piston

REPAIR PACKAGE,
CARBURETOR . . . . . Part No. 2299 082
Consists of:
1 - ---- --- Gasket, Air Horn
1 - ---- --- Gasket, Flange
1 - ---- --- Gasket, Main Body
2 - ---- --- Gasket, Metering Jet Plug
1 - ---- --- Gasket, Power By-Pass Jet
1 - ---- --- Gasket, Pump Discharge Nozzle

(Pkg. Cont'd)

MyMopar.com

CODE	PART NAME AND PART NUMBER

14-30-4 Cont'd

2 - ---- --- Jet, Main Metering
1 - ---- --- Jet, Power By-Pass
1 - ---- --- Needle, w/Seat
1 - ---- --- Pump
1 - ---- --- Spring, Pump

REPAIR PACKAGE,
CARBURETOR . . . . . Part No. 2299 086
Consists of:
1 - ---- --- Gasket, Air Horn
1 - ---- --- Gasket, Body
1 - ---- --- Gasket, Flange
2 - ---- --- Gasket, Metering Jet Plug
1 - ---- --- Gasket, Power By-Pass Jet
1 - ---- --- Gasket, Pump Discharge Nozzle
2 - ---- --- Jet, Main Metering
1 - ---- --- Jet, Power By-Pass
1 - ---- --- Needle, w/Seat
1 - ---- --- Pump
1 - ---- --- Spring, Pump

REPAIR PACKAGE,
CARBURETOR . . . . . Part No. 2299 091
Consists of:
1 - ---- --- Gasket, Air Horn
1 - ---- --- Gasket, Body
1 - ---- --- Gasket, Flange
1 - ---- --- Gasket, Power By-Pass Jet
1 - ---- --- Gasket, Venturi Cluster
2 - ---- --- Jet, Main Metering
1 - ---- --- Jet, Power By-Pass
1 - ---- --- Needle, w/Seat
1 - ---- --- Pump

REPAIR PACKAGE,
CARBURETOR . . . . . Part No. *2299 036
Consists of:
1 - ---- --- Diaphragm, w/Rod, Pump
2 - ---- --- Gasket, Economizer Body
1 - ---- --- Gasket, Flange
1 - ---- --- Gasket, Float Bowl
1 - ---- --- Gasket, Fuel Inlet
1 - ---- --- Needle, w/Seat, Float
1 - ---- --- Valve, Vent

REPAIR PACKAGE,
CARBURETOR . . . . . Part No. *2299 106
Consists of:
1 - ---- --- Gasket, Air Horn
1 - ---- --- Gasket, Flange
1 - ---- --- Gasket, Pump Jet Housing
2 - ---- --- Gasket, Primary Vent Cluster
2 - ---- --- Gasket, Secondary Vent Cluster
2 - ---- --- Jet, Metering Rod
2 - ---- --- Needle, w/Seat, Float
1 - ---- --- Plunger, w/Rod, Pump
2 - ---- --- Rod, Step-Up
2 - ---- --- Spring, Vacuum Piston

ZIP KIT, CARBURETOR. Part No. 2299 069
Consists of:
1 - ---- --- Gasket, Body

(Pkg. Cont'd)

CODE	PART NAME AND PART NUMBER

14-30-4 Cont'd

1 - ---- --- Gasket, Body Flange
1 - ---- --- Gasket, Flange
1 - ---- --- Gasket, Step-Up Jet
1 - ---- --- Gasket, Step-Up Piston
1 - ---- --- Needle w/Seat
1 - ---- --- Plunger, Pump
1 - ---- --- Gauge, Float

ZIP KIT, CARBURETOR. Part No. *2299 070
Consists of:
1 - ---- --- Gasket, Body
1 - ---- --- Gasket, Body Flange
1 - ---- --- Gasket, Flange
1 - ---- --- Gasket, Step-Up Jet
1 - ---- --- Gasket, Step-Up Piston
1 - ---- --- Needle, w/Seat
1 - ---- --- Plunger, Pump
1 - ---- --- Gauge, Float

ZIP KIT, CARBURETOR. Part No. 2299 072
Consists of:
1 - ---- --- Gasket, Body
1 - ---- --- Gasket, Body Flange
1 - ---- --- Gasket, Flange
1 - ---- --- Gasket, Step-Up Jet
1 - ---- --- Gasket, Step-Up Piston
1 - ---- --- Needle w/Seat
1 - ---- --- Plunger, Pump
1 - ---- --- Gauge, Float

ZIP KIT, CARBURETOR. Part No. 2299 073
Consists of:
1 - ---- --- Gasket, Body
1 - ---- --- Gasket, Body Flange
1 - ---- --- Gasket, Flange
1 - ---- --- Gasket, Step-Up Jet
1 - ---- --- Gasket, Step-Up Piston
1 - ---- --- Needle w/Seat
1 - ---- --- Plunger, Pump
1 - ---- --- Gauge, Float

ZIP KIT, CARBURETOR. Part No. 2299 074
Consists of:
1 - ---- --- Gasket, Body
1 - ---- --- Gasket, Body Flange
1 - ---- --- Gasket, Flange
1 - ---- --- Gasket, Step-Up Piston
1 - ---- --- Gasket, Venturi Cover
1 - ---- --- Gasket, Venturi Housing
1 - ---- --- Gauge, Float
1 - ---- --- Needle, w/Seat
1 - ---- --- Plunger, Pump

ZIP KIT, CARBURETOR. Part No. 2299 076
Consists of:
1 - ---- --- Gasket, Body
1 - ---- --- Gasket, Body Flange
1 - ---- --- Gasket, Flange
1 - ---- --- Gasket, Step-Up Piston
1 - ---- --- Gasket, Venturi Cover
1 - ---- --- Gasket, Venturi Housing
1 - ---- --- Gauge, Float
1 - ---- --- Needle, w/Seat
1 - ---- --- Plunger, Pump

MyMopar.com

CODE	PART NAME AND PART NUMBER

14-30-4 Cont'd

ZIP KIT, CARBURETOR. Part No. 2299 077
Consists of:
1 - ---- --- Gasket, Air Horn
1 - ---- --- Gasket, Flange
1 - ---- --- Gasket, Primary Venturi Cluster
1 - ---- --- Gasket, Pump Jet Housing
1 - ---- --- Gasket, Secondary Venturi Cluster
1 - ---- --- Gauge, Float
1 - ---- --- Needle, w/Seat
1 - ---- --- Plunger, Pump

ZIP KIT, CARBURETOR. Part No. 2299 078
Consists of:
1 - ---- --- Gasket, Air Horn
1 - ---- --- Gasket, Flange
1 - ---- --- Gasket, Primary Venturi Cluster
1 - ---- --- Gasket, Pump Jet Housing
1 - ---- --- Gasket, Secondary Venturi
1 - ---- --- Gauge, Float
1 - ---- --- Needle, w/Seat
1 - ---- --- Plunger, Pump Cluster

ZIP KIT, CARBURETOR. Part No. 2299 079
Consists of:
1 - ---- --- Gasket, Air Horn
1 - ---- --- Gasket, Flange
1 - ---- --- Gasket, Primary Venturi Cluster
1 - ---- --- Gasket, Pump Jet Housing
1 - ---- --- Gasket, Secondary Venturi Cluster
1 - ---- --- Gauge, Float
1 - ---- --- Needle, w/Seat
1 - ---- --- Plunger, Pump

ZIP KIT, CARBURETOR. Part No. 2299 080
Consists of:
1 - ---- --- Gasket, Air Horn
1 - ---- --- Gasket, Flange
1 - ---- --- Gasket, Primary Venturi Cluster
1 - ---- --- Gasket, Pump Jet Housing
1 - ---- --- Gasket, Secondary Venturi Cluster
1 - ---- --- Gauge, Float
1 - ---- --- Needle, w/Seat
1 - ---- --- Plunger, Pump

ZIP KIT, CARBURETOR. Part No. 2299 083
Consists of:
1 - ---- --- Gasket, Air Horn
1 - ---- --- Gasket, Flange
1 - ---- --- Gasket, Main Body
1 - ---- --- Gasket, Metering Jet Plug
1 - ---- --- Gasket, Power By-Pass Jet
1 - ---- --- Gasket, Pump Discharge Nozzle
1 - ---- --- Gauge, Float
1 - ---- --- Needle, w/Seat
1 - ---- --- Pump

14-30-4 Cont'd

ZIP KIT, CARBURETOR. Part No. 2299 093
Consists of:
1 - ---- --- Gasket, Air Horn
1 - ---- --- Gasket, Flange
1 - ---- --- Gasket, Main Body
1 - ---- --- Gasket, Power By-Pass Jet
1 - ---- --- Gasket, Venturi Cluster
1 - ---- --- Needle, w/Seat
1 - ---- --- Gauge, Float
1 - ---- --- Pump

14-30-7 GASKET PACKAGE, CARBURETOR . . . . . Part No. 1826 511
Consists of:
1 - ---- --- Gasket, Body
1 - ---- --- Gasket, Body Flange
1 - ---- --- Gasket, Flange
2 - ---- --- Gasket, Main Metering Jet
1 - ---- --- Gasket, Float Needle Seat
1 - ---- --- Gasket, Step-Up Piston
1 - ---- --- Gasket, Venturi Cover
1 - ---- --- Gasket, Venturi Housing

GASKET PACKAGE, CARBURETOR . . . . . Part No. 1826 561
Consists of:
1 - ---- --- Gasket, Air Cleaner
1 - ---- --- Gasket, Air Horn
1 - ---- --- Gasket, Flange
2 - ---- --- Gasket, Primary Venturi Cluster
1 - ---- --- Gasket, Pump Jet Housing
2 - ---- --- Gasket, Secondary Venturi Cluster

GASKET PACKAGE, CARBURETOR . . . . . Part No. 2196 209
Consists of:
1 - ---- --- Gasket, Air Cleaner
1 - ---- --- Gasket, Air Horn
1 - ---- --- Gasket, Flange
1 - ---- --- Gasket, Pump Jet Housing
2 - ---- --- Gasket, Primary Venturi Cluster
2 - ---- --- Gasket, Secondary Venturi Cluster

GASKET PACKAGE, CARBURETOR . . . . . Part No. 2196 211
Consists of:
1 - ---- --- Gasket, Air Cleaner
1 - ---- --- Gasket, Air Horn
1 - ---- --- Gasket, Flange
1 - ---- --- Gasket, Pump Jet Housing
2 - ---- --- Gasket, Primary Venturi Cluster
2 - ---- --- Gasket, Secondary Venturi Cluster

GASKET PACKAGE, CARBURETOR . . . . . Part No. 2196 212
Consists of:
1 - ---- --- Gasket, Air Cleaner
1 - ---- --- Gasket, Air Horn

(Pkg. Cont'd)

MyMopar.com

CODE	PART NAME AND PART NUMBER

14-30-7 Cont'd

1 - ---- --- Gasket, Flange
1 - ---- --- Gasket, Pump Jet Housing
2 - ---- --- Gasket, Primary Venturi Cluster
2 - ---- --- Gasket, Secondary Venturi Cluster

GASKET PACKAGE, CARBURETOR . . . . . Part No. 2196 221
Consists of:
1 - ---- --- Gasket, Body
1 - ---- --- Gasket, Body Flange
1 - ---- --- Gasket, Flange
1 - ---- --- Gasket, Float Needle Seat
1 - ---- --- Gasket, Step-Up Jet
1 - ---- --- Gasket, Step-Up Piston

GASKET PACKAGE, CARBURETOR . . . . . Part No. 2196 222
Consists of:
1 - ---- --- Gasket, Body
1 - ---- --- Gasket, Body Flange
1 - ---- --- Gasket, Flange
1 - ---- --- Gasket, Needle Seat
1 - ---- --- Gasket, Step-Up Jet
1 - ---- --- Gasket, Step-Up Piston

GASKET PACKAGE, CARBURETOR . . . . . Part No. 2240 470
Consists of:
1 - ---- --- Gasket, Body
1 - ---- --- Gasket, Body Flange
1 - ---- --- Gasket, Flange
1 - ---- --- Gasket, Needle and Seat
1 - ---- --- Gasket, Step-Up Jet
1 - ---- --- Gasket, Step-Up Piston

GASKET PACKAGE, CARBURETOR . . . . . Part No. 2240 472
Consists of:
1 - ---- --- Gasket, Body
1 - ---- --- Gasket, Body Flange
1 - ---- --- Gasket, Flange
1 - ---- --- Gasket, Needle and Seat
1 - ---- --- Gasket, Step-Up Jet
1 - ---- --- Gasket, Step-Up Piston

GASKET PACKAGE, CARBURETOR . . . . . Part No. 2240 478
Consists of:
1 - ---- --- Gasket, Air Cleaner
1 - ---- --- Gasket, Body
1 - ---- --- Gasket, Body Flange
1 - ---- --- Gasket, Flange
1 - ---- --- Gasket, Step-Up Piston
1 - ---- --- Gasket, Venturi Cover
1 - ---- --- Gasket, Venturi Housing

14-30-7 Cont'd

GASKET PACKAGE, CARBURETOR . . . . . Part No. 2275 255
Consists of:
1 - ---- --- Gasket, Air Horn
1 - ---- --- Gasket, Main Body
2 - ---- --- Gasket, Metering Jet Plug
1 - ---- --- Gasket, Needle Valve
1 - ---- --- Gasket, Power By-Pass Jet
1 - ---- --- Gasket, Pump Discharge Nozzle
2 - ---- --- Cotter Pin

GASKET PACKAGE, CARBURETOR . . . . . Part No. 2299 092
Consists of:
1 - ---- --- Gasket, Air Horn
1 - ---- --- Gasket, Flange
1 - ---- --- Gasket, Float Needle Valve Seat
1 - ---- --- Gasket, Main Body
1 - ---- --- Gasket, Power By-Pass Jet
1 - ---- --- Gasket, Venturi Cluster

GASKET PACKAGE, CARBURETOR . . . . . Part No. 2299 037
Consists of:
1 - ---- --- Gasket, Body
1 - ---- --- Gasket, Body Flange
1 - ---- --- Gasket, Float Bowl
1 - ---- --- Gasket, Fuel Inlet
1 - ---- --- Gasket, Vent Valve

16-03-1 JOINT PACKAGE, UNIVERSAL, CROSS and ROLLER . . . . . Part No. 1752 624
Consists of:
1 - ---- --- Cross
4 - 858 006 Retainer, Roller
4 - 1739 913 Roller, w/Bushing

JOINT PACKAGE, UNIVERSAL and PIN TYPE . . . . . Part No. 2298 941
Consists of:
2 - 1739 924 Button, Centering
2 - 1739 927 Ball and Roller
1 - 870 540 Clamp, Small
1 - 1532 943 Clamp, Large
1 - 1635 092 Cover
1 - 1732 703 Cover, Dust
1 - 2266 922 Cover, Grease
1 - 1739 923 Pin, Centering
2 - 605 004 Washer, Thrust
1 - 1635 098 Gasket

MyMopar.com

CODE	PART NAME AND PART NUMBER
16-03-1	Cont'd JOINT PACKAGE, UNIVERSAL BALL AND PIN TYPE . Part No. 2298 940 Consists of: 2 - 629 768 Button, Centering 2 - 1739 927 Ball and Roller 1 - 870 539 Clamp 1 - 870 540 Clamp 1 - ---- --- Cover, Dust 1 - 2266 923 Cover, Grease 1 - 1616 185 Gasket 1 - 579 445 Pin, Centering 2 - 605 004 Washer, Thrust
16-07-4	DUST COVER PACKAGE, UNIVERSAL JOINT . . . Part No. 1603 397 Consists of: 1 - 870 539 Clamp, Large 1 - 870 540 Clamp, Small 1 - ---- --- Cover
	DUST COVER PACKAGE, UNIVERSAL JOINT . . . Part No. 2275 514 Consists of: 1 - 870 540 Clamp, Small 1 - 1532 943 Clamp, Large 1 - ---- --- Cover
16-20-1	FLANGE PACKAGE, AXLE DRIVE . . . . . Part No. 2240 612 Consists of: 2 - 1828 824 Clamp, Bushing 1 - ---- --- Flange 4 - 120 380 Washer 4 - 952 538 Screw
	FLANGE PACKAGE, AXLE DRIVE . . . . . Part No. 2240 614 Consists of: 2 - 1828 824 Clamp, Bushing 1 - ---- --- Flange 4 - 120 380 Washer 4 - 952 538 Screw
16-20-8	NUT PACKAGE . . . . . Part No. *2298 967 Consists of: 1 - ---- --- Nut 1 - ---- --- Washer
17-11-1	BUSHING PACKAGE, REAR SPRING SHACKLE . . . . . Part No. 2196 011 Consists of: 4 - ---- --- Bushing
17-16-1	SHACKLE and BUSHING PACKAGE, REAR SPRING . . . . . Part No. 1450 087 Consists of: 4 - ---- --- Bushing 1 - ---- --- Plate 2 - 271 506 Nut, Bolt 1 - ---- --- Shackle, w/Bolt

CODE	PART NAME AND PART NUMBER
17-16-1	Cont'd SHACKLE and BUSHING PACKAGE, REAR SPRING . . . . . Part No. 1450 961 Consists of: 4 - ---- --- Bushing 2 - 271 506 Nut, Bolt 1 - ---- --- Plate 1 - ---- --- Shackle, w/Bolt
	SHACKLE and BUSHING PACKAGE, REAR SPRING . . . . . Part No. 2084 236 Consists of: 4 - ---- --- Bushing 1 - ---- --- Insert, Bushing 2 - 271 506 Nut, Bolt 1 - ---- --- Plate, Outer 1 - ---- --- Shackle, w/Bolt
	SHACKLE and BUSHING PACKAGE, REAR SPRING . . . . . Part No. 2196 010 Consists of: 4 - ---- --- Bushing 2 - 120 369 Nut, Bolt 1 - ---- --- Plate, Outer 1 - ---- --- Shackle, w/Bolt
	SHACKLE and BUSHING PACKAGE, REAR SPRING . . . . . Part No. 2275 543 Consists of: 4 - ---- --- Bushing 2 - 271 506 Nut, Bolt 1 - ---- --- Plate, Outer 1 - ---- --- Insert, Bushing 1 - ---- --- Shackle, w/Bolt
17-23-3	ABSORBER and BUSHING PACKAGE, REAR SHOCK . . . . . Part No. 2240 317 Consists of: 1 - ---- --- Absorber 2 - 1319 902 Bushing
	ABSORBER and BUSHING PACKAGE, REAR SHOCK . . . . . Part No. 2240 358 Consists of: 1 - ---- --- Absorber 2 - 1319 902 Bushing
	ABSORBER and BUSHING PACKAGE, REAR SHOCK . . . . . Part No. 2240 359 Consists of: 1 - ---- --- Absorber 2 - 1319 902 Bushing
	ABSORBER and BUSHING PACKAGE, REAR SHOCK . . . . . Part No. 2240 360 Consists of: 1 - ---- --- Absorber 2 - 1319 902 Bushing

★ Indicates use as required.
⊟ Indicates parts not listed in any previous parts book.
May 1, 1962 Supersedes Sept. 15, 1961.

Printed in U.S.A.
Prices and specifications subject to change without notice.
* Indicates change or addition.

MyMopar.com

CODE	PART NAME AND PART NUMBER

17-23-3 Cont'd

ABSORBER and BUSHING PACKAGE, REAR SHOCK . . . . . Part No. 2240 361
Consists of:
1 - ---- --- Absorber
2 - 1319 902 Bushing

ABSORBER and BUSHING PACKAGE, REAR SHOCK . . . . . Part No. 2240 362
Consists of:
1 - ---- --- Absorber
2 - 1319 902 Bushing

ABSORBER and BUSHING PACKAGE, REAR SHOCK . . . . . Part No. 2275 847
Consists of:
1 - ---- --- Absorber
1 - 1319 902 Bushing, Lower
1 - 2201 554 Bushing, Upper

ABSORBER and BUSHING PACKAGE, REAR SHOCK . . . . . Part No. 2275 848
Consists of:
1 - ---- --- Absorber
1 - 1319 902 Bushing, Lower
1 - 2201 554 Bushing, Upper

ABSORBER and BUSHING PACKAGE, REAR SHOCK . . . . . Part No. 2275 849
Consists of:
1 - ---- --- Absorber
1 - 1319 902 Bushing, Lower
1 - 2201 554 Bushing, Upper

ABSORBER and BUSHING PACKAGE, REAR SHOCK . . . . . Part No. *2298 912
Consists of:
1 - ---- --- Absorber
2 - 1319 902 Bushing

ABSORBER and BUSHING PACKAGE, FRONT SHOCK . . . . . Part No. *2298 803
Consists of:
1 - ---- --- Absorber
1 - 2206 923 Bushing, Upper Mounting
1 - ---- --- Insert, Lower Bushing
1 - ---- --- Sleeve, Lower Bushing
2 - 2206 925 Washer, Upper Mounting Bushing

ABSORBER and BUSHING PACKAGE, FRONT SHOCK . . . . . Part No. *2298 804
Consists of:
1 - ---- --- Absorber
1 - 2206 923 Bushing, Upper Mounting
1 - ---- --- Insert, Lower Bushing
1 - ---- --- Sleeve, Lower Bushing
2 - 2206 925 Washer, Upper Mounting Bushing

17-23-3 Cont'd

ABSORBER and BUSHING PACKAGE, FRONT SHOCK . . . . . Part No. *2298 805
Consists of:
1 - ---- --- Absorber
1 - 2206 923 Bushing, Upper Mounting
1 - ---- --- Insert, Lower Bushing
1 - ---- --- Sleeve, Lower Bushing
2 - 2206 925 Washer, Upper Mounting Bushing

ABSORBER and BUSHING PACKAGE, FRONT SHOCK . . . . . Part No. *2298 806
Consists of:
1 - ---- --- Absorber
1 - 2206 923 Bushing, Upper Mounting
1 - ---- --- Insert, Lower Bushing
1 - ---- --- Sleeve, Lower Bushing
2 - 2206 925 Washer, Upper Mounting Bushing

ABSORBER and BUSHING PACKAGE, FRONT SHOCK . . . . . Part No. *2298 807
Consists of:
1 - ---- --- Absorber
1 - 2206 923 Bushing, Upper Mounting
1 - ---- --- Insert, Lower Bushing
1 - ---- --- Sleeve, Lower Bushing
2 - 2206 925 Washer, Upper Mounting Bushing

ABSORBER and BUSHING PACKAGE, FRONT SHOCK . . . . . Part No. *2275 883
Consists of:
1 - ---- --- Absorber
1 - 2206 923 Bushing, Upper
1 - ---- --- Insert, Lower Bushing
1 - ---- --- Sleeve, Lower Bushing

ABSORBER and BUSHING PACKAGE, FRONT SHOCK . . . . . Part No. *2275 884
Consists of:
1 - ---- --- Absorber
1 - 1614 385 Bushing, Upper
1 - ---- --- Insert, Lower Bushing
1 - ---- --- Sleeve, Lower Bushing

19-01-3 OVERHAUL PACKAGE, STEERING GEAR . . . . Part No. 2196 995
Consists of:
1 - 2123 169 Bearing, Shaft Housing, Lower
1 - 2123 170 Bearing, Shaft Housing, Upper
2 - 2201 624 Bushing, Column Jacket Seal
2 - 640 086 Cage and Roller, Worm Thrust Bearing
1 - 2225 805 Cup, Worm Thrust Bearing, Lower
1 - 376 751 Cup, Worm Thrust Bearing, Upper
1 - 1738 206 Gasket, Shaft Cover
1 - 2201 234 Seal, Column Jacket Oil
1 - 1730 985 Seal, Shaft Oil
1 - 2200 730 Seal, Worm Shaft Oil
10 - 1123 313 Shim, Housing Cover

MyMopar.com

CODE	PART NAME AND PART NUMBER
19-01-3	Cont'd OVERHAUL PACKAGE, STEERING GEAR . . . . Part No. 2279 954 Consists of: 3 - 2126 890 Bearing, Shaft 2 - 2072 060 Bearing, Worm Thrust 2 - 2127 097 Cup, Worm Thrust Bearing 1 - 2127 108 Gasket, Shaft Cover 1 - 2266 738 Seal, Column Shaft 1 - 2127 154 Seal, Shaft Oil 1 - 2267 156 Seal, Worm Shaft 4 - ---- --- Washer, Shaft Adjusting Screw OVERHAUL PACKAGE, STEERING GEAR . . . . Part No. 2279 955 Consists of: 2 - 2072 060 Bearing, Worm Thrust 2 - 2267 128 Bushing, Shaft 2 - 2127 097 Cup, Worm Thrust Bearing 1 - 2127 108 Gasket, Shaft Cover 1 - 2266 738 Seal, Column Shaft 1 - 2127 154 Seal, Shaft Oil 1 - 2267 156 Seal, Worm Shaft 4 - ---- --- Washer, Shaft Adjusting Screw
19-01-4	"O" RING and SEAL PACKAGE, POWER STEERING GEAR . . . . Part No. 2084 839 Consists of: 1 - 1733 724 Gasket, Valve Housing Plug 1 - 1733 602 "O" Ring, Column Support 2 - 1733 562 "O" Ring, Cylinder Head 1 - 1486 205 "O" Ring, Cylinder Head Ferrule 1 - 1823 150 "O" Ring, Housing 2 - 1556 385 "O" Ring, Housing Port 1 - 1536 268 "O" Ring, Pressure Control Valve 1 - 1822 149 "O" Ring, Reaction, Lower 1 - 1733 615 "O" Ring, Shaft Cover 1 - 1733 612 "O" Ring, Valve Housing 1 - 1822 151 Seal, Reaction, Upper 1 - 1822 203 Seal, Shaft Adjusting Screw 1 - 1730 985 Seal, Shaft Oil 1 - 1822 324 Seal, Worm Shaft Oil "O" RING and SEAL PACKAGE, POWER STEERING GEAR . . . . Part No. 2084 840 Consists of: 1 - 1733 724 Gasket, Valve Housing Plug 1 - 1733 602 "O" Ring, Column Support 2 - 1733 562 "O" Ring, Cylinder Head 1 - 1486 205 "O" Ring, Cylinder Head Ferrule 1 - 1823 150 "O" Ring, Housing 2 - 1556 385 "O" Ring, Housing Port 1 - 1536 268 "O" Ring, Pressure Control Valve 1 - 1823 091 "O" Ring, Reaction, Lower 1 - 1733 615 "O" Ring, Shaft Cover 1 - 1733 612 "O" Ring, Valve Housing 1 - 1733 593 Seal, Reaction, Upper (Pkg. Cont'd)

CODE	PART NAME AND PART NUMBER
19-01-4	Cont'd 1 - 1822 203 Seal, Shaft Adjusting Screw 1 - 1730 985 Seal, Shaft Oil 1 - 1822 324 Seal, Worm Shaft Inner "O" RING and SEAL PACKAGE, POWER STEERING GEAR . . . . Part No. 2279 995 Consists of: 1 - 1733 724 Gasket, Valve Housing Plug 1 - 1733 602 "O" Ring, Column Support 2 - 1733 562 "O" Ring, Cylinder Head 1 - 1486 205 "O" Ring, Cylinder Head 1 - 1823 150 "O" Ring, Housing 2 - 1556 385 "O" Ring, Housing Port 1 - 1536 268 "O" Ring, Pressure Control Valve 1 - 1822 149 "O" Ring, Reaction, Lower 1 - 1733 615 "O" Ring, Shaft Cover 1 - 1733 612 "O" Ring, Valve Housing 1 - 1822 151 Seal, Reaction, Upper 1 - 1822 203 Seal, Shaft Adjusting Screw 1 - 2126 956 Seal, Shaft Oil
19-02-4	HOUSING PACKAGE, POWER STEERING GEAR . . . . . Part No. 2240 602 Consists of: 1 - ---- --- Housing 1 - 1823 150 "O" Ring 1 - 1823 151 Spring, Valve Lever
19-15-39	SPRING PACKAGE, POWER STEERING GEAR BALL GUIDE. . . Part No. 2084 215 Consists of: 2 - ---- --- Plug 2 - ---- --- Spring
19-19-1	SEAL PACKAGE, CROSS SHAFT COVER . . . . . Part No. 2279 986 Consists of: 1 - 1733 615 "O" Ring, Cover 1 - 1822 203 Seal, Shaft Adjusting Screw
19-19-40	WASHER PACKAGE, STEERING GEAR SHAFT ADJUSTING SCREW. . . Part No. 2279 961 Consists of: 3 - ---- --- Washer
19-27-31	IDLER ARM PACKAGE, STEERING LINKAGE RHD. . . . . Part No. 2196 932 Consists of: 1 - ---- --- Arm 1 - 2072 490 Bolt, Arm 1 - 1734 327 Bushing, Arm 1 - ---- --- Nut, Arm Bolt 1 - ---- --- Nut, Arm End 1 - 108 636 Pin, Arm End Nut Cotter 1 - ---- --- Seal, Arm End

★ Indicates use as required.
B Indicates parts not listed in any previous parts book.
May 1, 1962 Supersedes Sept. 15, 1961.

Printed in U.S.A.
Prices and specifications subject to change without notice.
* Indicates change or addition.

MyMopar.com

CODE	PART NAME AND PART NUMBER
19-48-7	SMALL PARTS PACKAGE, GEARSHIFT CONTROL . Part No. 2298 507 Consists of: 2 - 1676 200 Bushing, Operating Lever Shaft Grommet 2 - 1137 669 Clip, Control Rod 2 - 1137 669 Clip, Control Rod Swivel 2 - 1941 699 Grommet, Operating Lever Shaft 4 - 631 217 Washer, Control Rod, Plain 3 - 631 217 Washer, Control Rod Swivel, Plain 1 - 391 888 Washer, Control Rod Swivel, Spring
	SMALL PARTS PACKAGE, GEARSHIFT CONTROL . Part No. 2298 508 Consists of: 1 - 2208 159 Bushing, Torque Shaft Frame Bracket Grommet 1 - 1676 200 Bushing, Torque Shaft Lever Grommet 1 - 1676 200 Bushing, Transmission Gearshift Operating Lever Grommet 2 - 1137 669 Clip, Control Rod 2 - 1137 669 Clip, Control Rod Swivel 1 - 2208 158 Grommet, Torque Shaft Frame Bracket 1 - 1941 699 Grommet, Torque Shaft Lever 1 - 1941 699 Grommet, Transmission Gearshift Operating Lever 4 - 631 217 Washer, Control Rod, Plain 3 - 631 217 Washer, Control Rod Swivel, Plain 1 - 391 888 Washer, Control Rod Swivel, Spring 2 - 6023 085 Washer, Torque Shaft, Plain 1 - 6023 086 Washer, Torque Shaft, Spring 2 - 2208 172 Spacer, Torque Shaft
	SMALL PARTS PACKAGE, GEARSHIFT CONTROL . Part No. 2298 509 Consists of: 1 - 2208 159 Bushing, Torque Shaft Frame Bracket Grommet 1 - 1676 200 Bushing, Torque Shaft Lever Grommet 2 - 1137 669 Clip, Control Rod 2 - 1137 669 Clip, Control Rod Swivel 1 - 2208 158 Grommet, Torque Shaft Frame Bracket 1 - 1941 699 Grommet, Torque Shaft Lever 4 - 631 217 Washer, Control Rod, Plain 2 - 1533 190 Washer, Control Rod Swivel 1 - 631 217 Washer, Control Rod Swivel, Plain 1 - 391 888 Washer, Control Rod Swivel, Spring 2 - 6023 085 Washer, Torque Shaft Plain 1 - 6023 086 Washer, Torque Shaft Spring 2 - 2208 172 Spacer, Torque Shaft
19-54-2	PUMP PACKAGE, POWER STEERING GEAR . . . . Part No. 2196 082 Consists of: 1 - ---- --- Pump (partial) 1 - 2120 019 Seal, Oil Reservoir Mounting 1 - 2120 018 Seal, Oil Reservoir Oil
	PUMP PACKAGE, POWER STEERING GEAR . . . . Part No. 2240 620 Consists of: 1 - ---- --- Pump (partial) 1 - 1738 662 Seal, Oil Reservoir Mounting 1 - 1732 946 Seal, Oil Reservoir Oil
19-54-55	SEAL PACKAGE, POWER STEERING PUMP . . . Part No. *2279 997 Consists of: 1 - ---- --- Oil Seal, Oil Reservoir 1 - ---- --- Seal, Oil Reservoir Mounting
	SEAL PACKAGE, POWER STEERING PUMP . . . Part No. *2279 998 Consists of: 1 - ---- --- Oil Seal, Oil Reservoir 1 - ---- --- Seal, Oil Reservoir Mounting
19-57-1	SEAL PACKAGE, POWER STEERING GEAR VALVE. Part No. 2279 985 Consists of: 1 - 1733 724 Gasket, Housing Plug 1 - 1823 150 "O" Ring, Housing 2 - 1556 385 "O" Ring, Housing Port 1 - 1536 268 "O" Ring, Pressure Control Valve Body 1 - 1733 612 "O" Ring, Valve Housing
19-57-2	PISTON and SPRING PACKAGE, POWER STEERING GEAR PRESSURE CONTROL VALVE . . . . . Part No. 1879 509 Consists of: 1 - ---- --- Piston 1 - 1822 442 Spring
21-01-3	SEAL and GASKET PACKAGE, STANDARD TRANSMISSION . . . . . Part No. 2196 062 Consists of: 1 - 1949 346 Gasket, Case Cover 3 - 865 180 Gasket, Bearing Retainer 1 - 1949 361 Gasket, Extension 2 - 1949 350 Seal, Lever Shaft 1 - 1949 343 Seal, Drive Pinion Oil 1 - 1949 401 Seal, Main Shaft
	SEAL and GASKET PACKAGE, STANDARD TRANSMISSION . . . . . Part No. 2240 320 Consists of: 1 - 2124 466 Gasket, Case Cover 1 - 2124 519 Gasket, Extension 2 - 2124 496 Gasket, Bearing Retainer 1 - 2124 497 Gasket, Bearing Retainer 1 - 1949 933 Seal, Drive Pinion 1 - 2124 461 Seal, Output Shaft

★ Indicates use as required.
⊟ Indicates parts not listed in any previous parts book.
* Indicates change or addition.

Printed in U.S.A.
Prices and specifications subject to change without notice.
May 1, 1962.

MyMopar.com

CODE	PART NAME AND PART NUMBER

21-01-3 Cont'd

SEAL and GASKET PACKAGE, AUTO TRANSMISSION . . . . . Part No. 2275 499

Consists of:
- 1 - 2400 064 Gasket, Extension
- 1 - 2124 846 Gasket, Front Oil Pump Housing
- 1 - 2124 867 Gasket, Oil Pan
- 1 - 863 987 Gasket, Drain Plug
- 1 - 1924 165 Gasket, Parking Lock Cover, Up To
- 1 - ---- --- Gasket, Parking Lock Cover
- 1 - 2124 820 Seal, Front Clutch Piston Inner
- 1 - 2124 821 Seal, Front Clutch Piston, Outer
- 1 - 1942 021 Seal, Front Oil Pump Housing
- 2 - 1942 109 Seal Ring, Governor Support
- 2 - 1942 041 Seal Ring, Input Shaft
- 1 - 2205 080 Seal, Output Shaft
- 1 - 1942 054 Seal, Rear Clutch Piston, Inner
- 1 - 2124 835 Seal, Rear Clutch Piston, Outer
- 1 - 2205 300 Seal, Throttle Lever Shaft
- 1 - 1942 020 Seal, Torque Converter Impeller Hub
- 2 - 2124 813 Seal Ring, Reaction Shaft Support
- 1 - 6022 816 Snap Ring, Output Shaft
- 1 - 2125 104 Washer, Output Shaft Thrust

SEAL and GASKET PACKAGE, AUTO. TRANSMISSION . . . . . Part No. *2298 953

Consists of:
- 1 - 2400 064 Gasket, Extension
- 1 - 2124 846 Gasket, Front Oil Pump Housing
- 1 - 863 987 Gasket, Drain Plug
- 1 - 2205 207 Gasket, Parking Lock Cover
- 1 - 2124 867 Gasket, Oil Pan
- 1 - 2124 820 Seal, Front Clutch Piston, Inner
- 1 - 2124 821 Seal, Front Clutch Piston, Outer
- 1 - 1942 021 Seal, Front Oil Pump Housing
- 2 - 1942 109 Seal, Governor Support
- 1 - 2205 080 Seal, Output Shaft
- 1 - 1942 054 Seal, Rear Clutch Piston, Inner
- 1 - 2124 835 Seal, Rear Clutch Piston, Outer
- 1 - 2205 300 Seal, Throttle Lever Shaft
- 1 - 1942 020 Seal, Torque Converter Impeller Hub
- 2 - 2124 813 Seal, Reaction Shaft Support
- 2 - 1942 041 Snap Ring, Input Shaft
- 1 - 6022 816 Snap Ring, Output Shaft
- 1 - 2125 104 Washer, Output Shaft Thrust

21-01-3 Cont'd

SEAL and GASKET PACKAGE, AUTO TRANSMISSION . . . . . Part No. 2275 422

Consists of:
- 1 - 863 987 Gasket, Drain Plug
- 1 - 2205 322 Gasket, Extension
- 1 - 2205 299 Gasket, Oil Pan, After
- 1 - 1942 516 Gasket, Oil Pan, Up To
- 1 - ---- --- Gasket, Parking Lock Cover
- 1 - 1942 165 Gasket, Parking Lock Cover Up To
- 1 - 1942 390 Gasket, Reaction Shaft Support
- 2 - 1942 109 Ring, Governor Support Seal
- 2 - 1941 831 Ring, Input Shaft Seal
- 2 - 1942 389 Ring, Reaction Shaft Support Seal
- 1 - 1942 384 Seal, Frt. Oil Pump Housing, Up To
- 1 - 2204 709 Seal, Frt. Oil Pump Housing, After
- 1 - 1942 396 Seal, Frt. Clutch Piston, Inner
- 1 - 1942 397 Seal, Frt. Clutch Piston, Outer
- 1 - 1942 401 Seal, Output Shaft
- 1 - 1942 397 Seal, Rr. Clutch Piston, Outer
- 1 - 2125 187 Seal, Rr. Clutch Piston, Inner, After
- 1 - 1942 412 Seal, Rr. Clutch Piston, Inner, Up To
- 1 - 2205 300 Seal, Throttle Lever Shaft
- 1 - 2124 705 Seal, Torque Converter Impeller Hub
- 1 - 6022 859 Snap Ring, Output Shaft
- 1 - 1942 454 Washer, Output Shaft Thrust, .52"
- 1 - 1942 455 Washer, Output Shaft Thrust, .068"
- 1 - 1942 456 Washer, Output Shaft Thrust, .083"

SEAL and GASKET PACKAGE, AUTO. TRANSMISSION . . . . Part No. *2298 952

Consists of:
- 1 - 1942 390 Gasket, Reaction Shaft Support
- 1 - 2205 299 Gasket, Oil Pan
- 1 - 2205 322 Gasket, Extension
- 1 - 863 987 Gasket, Drain Plug
- 1 - 2205 207 Gasket, Parking Lock Cover
- 2 - 1942 109 Ring, Governor Support Seal
- 2 - 1941 831 Ring, Input Shaft Seal
- 2 - 1942 389 Ring, Reaction Shaft Support Seal
- 1 - 6022 859 Ring, Output Shaft Snap
- 1 - 1942 384 Seal, Front Oil Pump Housing, After
- 1 - 2125 187 Seal, Rear Clutch Piston, Inner

(Pkg. Cont'd)

MyMopar.com

CODE	PART NAME AND PART NUMBER

21-01-3 Cont'd

1 - 2124 705 Seal, Torque Converter Impeller Hub
1 - 1942 396 Seal, Front Clutch Piston, Inner
2 - 1942 397 Seal, Clutch Piston, Outer
1 - 2204 709 Seal, Front Oil Pump Housing
1 - 1942 401 Seal, Output Shaft
1 - 2205 300 Seal, Throttle Lever Shaft
1 - 1942 454 Washer, Output Shaft Thrust, .052"
1 - 1942 455 Washer Output Shaft Thrust, .068"
1 - 1942 456 Washer, Output Shaft Thrust, .083"

SEAL and GASKET PACKAGE, STANDARD TRANSMISSION . . . . . Part No. 2275 893
Consists of:
1 - 2124 466 Gasket, Case Cover
1 - 2124 519 Gasket, Extension
2 - 2124 496 Gasket, Bearing Retainer
1 - 2124 497 Gasket, Bearing Retainer
1 - 1949 343 Seal, Drive Pinion
1 - 2205 080 Seal, Output Shaft Oil

SEAL and GASKET PACKAGE, STANDARD TRANSMISSION . . . . . Part No. 2275 896
Consists of:
1 - 1949 346 Gasket, Case Cover
2 - 865 180 Gasket, Bearing Retainer
1 - 865 181 Gasket, Bearing Retainer
1 - 1949 361 Gasket, Extension
1 - 1949 343 Seal, Drive Pinion
1 - 1854 449 Seal, Output Shaft Oil

21-113-24 SWITCH PACKAGE, AUTO. TRANSMISSION NEUTRAL STARTER . . . . . Part No. 1704 283
Consists of:
1 - 1316 849 "O" Ring, Mounting
1 - ---- --- Switch, Neutral Starter
1 - 1704 482 Washer, Mounting

21-118-6 ROTOR PACKAGE, AUTO. TRANSMISSION FRONT OIL PUMP . . . . . Part No. 2240 302
Consists of:
1 - ---- --- Rotor, Front Oil Pump, Inner
1 - ---- --- Rotor, Front Oil Pump, Outer

ROTOR PACKAGE, AUTO. TRANSMISSION REAR OIL PUMP . . . . . Part No. 2196 795
Consists of:
1 - 1672 296 Rotor, Rear Oil Pump, Outer
1 - ---- --- Rotor, Rear Oil Pump, Inner

21-118-6 Cont'd

ROTOR PACKAGE, AUTO. TRANSMISSION FRONT OIL PUMP . . . . . Part No. 2275 497
Consists of:
1 - ---- --- Rotor, Front Oil Pump, Inner
1 - ---- --- Rotor, Front Oil Pump, Outer

ROTOR PACKAGE, AUTO. TRANSMISSION REAR OIL PUMP . . . . . Part No. 2275 496
Consists of:
1 - ---- --- Rotor, Rear Oil Pump, Inner
1 - ---- --- Rotor, Rear Oil Pump, Outer

21-136-228 CAM and RETAINER PACKAGE, AUTO. TRANSMISSION OVER-RUNNING CLUTCH . . . Part No. *2279 960
Consists of:
1 - ---- --- Cam
1 - ---- --- Retainer
5 - 138 212 Screw
5 - 1823 543 Washer

21-138-2 REPAIR PACKAGE, AUTO. TRANSMISSION GOVERNOR . . . . . Part No. 2275 498
Consists of:
1 - ---- --- Body, Governor
4 - 179 794 Bolt, Body
2 - 2125 024 Lock, Bolt
2 - 1942 109 Ring, Support Seal
1 - 1556 082 Shaft, Governor Valve
1 - 6022 817 Snap Ring, Body
1 - 1636 464 Snap Ring, Weight, Inner
1 - 1636 465 Snap Ring, Weight, Outer
2 - 1638 461 Snap Ring, Valve Shaft
1 - 1949 858 Spring, Governor
1 - 2124 663 Valve, Governor
1 - 1636 462 Weight, Governor, Inner
1 - 1636 461 Weight, Governor, Outer

REPAIR PACKAGE, AUTO. TRANSMISSION GOVERNOR . . . . . Part No. 2298 514
Consists of:
1 - ---- --- Body, Governor
4 - ---- --- Bolt, Body
2 - 2125 024 Lock, Body Bolt
2 - 1942 109 Ring, Support Seal
1 - 1556 082 Shaft, Valve
1 - 6022 817 Snap Ring, Body
1 - 1636 464 Snap Ring, Weight, Inner
1 - 1636 465 Snap Ring, Weight, Outer
2 - 1638 461 Snap Ring, Valve Shaft
1 - 1949 859 Spring, Governor
1 - 2124 663 Valve, Governor
1 - 1636 462 Weight, Governor, Inner
1 - 1636 461 Weight, Governor, Outer

MyMopar.com

CODE	PART NAME AND PART NUMBER
21-138-2	Cont'd REPAIR PACKAGE, AUTO, TRANSMISSION GOVERNOR . . Part No. *2196 998 Consists of: 1 - ---- --- Body, Governor 2 - 2125 024 Lock, Body Bolt 4 - ---- --- Bolt, Body 2 - 1942 109 Ring, Support Seal or Piston 1 - 1636 464 Snap Ring, Weight, Inner 1 - 1636 465 Snap Ring, Weight, Outer 2 - 1638 461 Snap Ring, Valve Shaft 1 - ---- --- Snap Ring, Body 1 - 2124 662 Spring, Governor 1 - 1556 082 Shaft, Valve 1 - 2124 663 Valve, Governor 1 - 1636 461 Weight, Governor, Outer 1 - 1636 462 Weight, Governor, Inner
	REPAIR PACKAGE, AUTO TRANSMISSION GOVERNOR . . Part No. *2421 377 Consists of: 1 - ---- --- Body, Governor 4 - ---- --- Bolt, Body 2 - 2125 024 Lock, Body Bolt 2 - 1942 109 Ring, Support Seal or Piston 1 - 1556 082 Shaft, Valve 1 - 6022 817 Snap Ring 1 - 1636 464 Snap Ring, Weight, Inner 1 - 1636 465 Snap Ring, Weight, Outer 2 - 1638 461 Snap Ring, Valve Shaft 1 - 1949 859 Spring, Governor 1 - 2124 663 Valve, Governor 1 - 2400 705 Weight, Governor, Inner 1 - 1636 461 Weight, Governor, Outer
23-14-53	HANDLE PACKAGE, FRONT DOOR VENT WING . . . Part No. 1954 110 Consists of: 1 - ---- --- Handle, Right 1 - ---- --- Key 1 - 6000 116 Pin 1 - 6000 110 Washer 1 - ---- --- Spring
	HANDLE PACKAGE, FRONT DOOR VENT WING . . . Part No. 1954 111 Consists of: 1 - ---- --- Handle, Left 1 - ---- --- Key 1 - 6000 116 Pin 1 - 6000 110 Washer 1 - ---- --- Spring
	HANDLE PACKAGE, FRONT DOOR VENT WING . . . Part No. 2167 916 Consists of: 1 - ---- --- Handle, Right 1 - 6000 116 Pin 1 - 6000 110 Washer
23-14-53	Cont'd HANDLE PACKAGE, FRONT DOOR VENT WING . . . Part No. 2167 917 Consists of: 1 - ---- --- Handle, Left 1 - 6000 116 Pin 1 - 6000 110 Washer
	HANDLE PACKAGE, FRONT DOOR VENT WING . . . Part No. 2259 214 Consists of: 1 - ---- --- Handle, Right 1 - 6000 110 Washer 1 - 6000 116 Pin
	HANDLE PACKAGE, FRONT DOOR VENT WING . . . Part No. 2259 215 Consists of: 1 - ---- --- Handle, Left 1 - 6000 110 Washer 1 - 6000 116 Pin
	HANDLE PACKAGE, FRONT DOOR VENT WING . . . . . Part No. 2299 433 Consists of: 1 - ---- --- Handle, Right 1 - 6022 858 Washer 1 - ---- --- Pin
	HANDLE PACKAGE, FRONT DOOR VENT WING . . . . . Part No. 2299 434 Consists of: 1 - ---- --- Handle, Left 1 - 6022 858 Washer 1 - ---- --- Pin
23-17-2	CYLINDER AND KEYS PACKAGE, DOOR AND IGNITION LOCK . . . . Part No. 2161 192 Consists of: 1 - ---- --- Cylinder, Ignition 1 - ---- --- Cylinder, Door, Right 1 - ---- --- Cylinder, Door, Left 2 - ---- --- Keys
	CYLINDER AND KEYS PACKAGE, DOOR AND IGNITION LOCK . . . . Part No. 2161 503 Consists of: 1 - ---- --- Cylinder, Ignition 1 - ---- --- Cylinder, Door, Right 1 - ---- --- Cylinder, Door, Left 2 - ---- --- Keys
23-17-4	CYLINDER and KEYS PACKAGE, DECK LID, GLOVE BOX and FLOOR CONSOLE LOCK . . . . Part No. 2292 502 Consists of: 1 - ---- --- Cylinder, Deck Lid 1 - ---- --- Latch, Glove Box 1 - ---- --- Latch, Floor Console 2 - ---- --- Keys

MyMopar.com

CODE	PART NAME AND PART NUMBER
23-17-4	Cont'd CYLINDER and KEYS PACKAGE, DECK LID, GLOVE BOX and FLOOR CONSOLE LOCK . . . . Part No. 2292 872 Consists of: 1 - ---- --- Cylinder, Deck Lid 1 - ---- --- Latch, Glove Box 1 - ---- --- Latch, Floor Console 2 - ---- --- Keys
23-17-5	CYLINDER AND KEYS PACKAGE, DOOR LID LOCK . . . . . Part No. 2086 050 Consists of: 1 - ---- --- Cylinder 2 - ---- --- Keys
	CYLINDER AND KEYS PACKAGE, DECK LID LOCK . . . . . Part No. 2162 613 Consists of: 1 - ---- --- Cylinder 2 - ---- --- Keys
23-17-21	CYLINDER AND KEYS PACKAGE, THIRD SEAT BACK HANDLE LOCK . Part No. 2292 051 Consists of: 1 - ---- --- Cylinder 2 - ---- --- Keys
23-17-24	CYLINDER AND KEYS PACKAGE, DOOR LOCK Part No. 2086 048 Consists of: 2 - ---- --- Cylinders 2 - ---- --- Keys
	CYLINDER AND KEYS PACKAGE, DOOR LOCK Part No. 2161 356 Consists of: 2 - ---- --- Cylinders 2 - ---- --- Keys
23-17-49	CYLINDER AND KEYS PACKAGE, TAILGATE LOCK . . . . . Part No. 2161 423 Consists of: 1 - ---- --- Cylinder 2 - ---- --- Keys
	CYLINDER AND KEYS PACKAGE, TAILGATE LOCK . . . . . Part No. 2161 599 Consists of: 1 - ---- --- Cylinder 2 - ---- --- Keys
23-17-72	CYLINDER AND KEYS PACKAGE, TIREWELL COVER LOCK. . . . . Part No. 2161 615 Consists of: 1 - ---- --- Cylinder 2 - ---- --- Keys
23-17-72	Cont'd CYLINDER AND KEYS PACKAGE, TIREWELL COVER LOCK. . . . . Part No. 2292 051 Consists of: 1 - ---- --- Cylinder 2 - ---- --- Keys
24-24-23	ADAPTER PACKAGE BLOWER SWITCH . . . Part No. 2196 336 Consists of: 1 - 2097 604 Spring 2 - ---- --- Bushing
24-25-2	PISTON RING PACKAGE . Part No. 2275 207 Consists of: 1 - 1990 584 Gasket, Cylinder Head 1 - 1377 825 Gasket, Oil Sump 1 - 1990 598 Gasket, Valve Plate 1 - ---- --- Ring, Piston
24-25-3	PISTON and CONNECTING ROD PACKAGE . . . . . Part No. 2275 203 Consists of: 1 - ---- --- Ball, Oil Pressure Relief 1 - 1990 584 Gasket, Cylinder Head 1 - 1990 598 Gasket, Cylinder Valve and Seat 1 - 1377 825 Gasket, Oil Sump 1 - ---- --- Piston and Connecting Rod 1 - ---- --- Spring, Pressure Relief
24-25-70	GAS SEAL PACKAGE. . . Part No. 1426 501 Consists of: 1 - 1377 831 Seal, Bearing Housing 1 - ---- --- Seal, Crankshaft
24-25-93	VALVE PLATE PACKAGE, RIGHT . . . . . Part No. 2275 204 Consists of: 1 - 1990 584 Gasket, Cylinder Head 1 - 1990 598 Gasket, Valve Plate 1 - ---- --- Plate, Valve
	VALVE PLATE PACKAGE, LEFT . . . . . Part No. 2275 205 Consists of: 1 - 1990 584 Gasket, Cylinder Head 1 - 1990 598 Gasket, Valve Plate 1 - ---- --- Plate, Valve
24-25-154	CRANKSHAFT PACKAGE. Part No. 2275 206 Consists of: 1 - ---- --- Crankshaft 2 - 1990 584 Gasket, Cylinder Head 1 - 1377 825 Gasket, Oil Sump
24-25-162	BEARING HOUSING PACKAGE . . . . . Part No. 2196 315 Consists of: 1 - ---- --- Housing 1 - 1377 831 Seal

MyMopar.com

CODE	PART NAME AND PART NUMBER
24-25-246	OIL PUMP PACKAGE . . Part No. 2196 306 Consists of: 1 - ---- --- Cover 1 - 1747 988 Seal, Cover 1 - ---- --- Rotor, Outer 1 - ---- --- Rotor, Inner 1 - ---- --- Shaft, Pump Drive
24-26-20	RECEIVER DRIER PACKAGE . . . . . Part No. *1880 658 Consists of: 1 - ---- --- Drier 1 - ---- --- Gasket
24-28-36	SEALING WASHER REPLACEMENT PACKAGE, COPPER . . Part No. 2196 341 Consists of: 3 - 152 188 Washer 3 - 2096 887 Washer 2 - ---- --- Washer 1 - 2097 206 Washer
24-28-64	VACUUM TUBE REPAIR KIT . . . . . Part No. *2448 621 Consists of: 1 - ---- --- Tube, 25 ft. 3/16" I.D. 30 - ---- --- Vacuum Tube Connectors
24-28-64	Cont'd VACUUM TUBE REPAIR KIT . . . . . Part No. *2448 620 Consists of: 1 - ---- --- Tube, 25 ft. 1/4" I.D. 30 - ---- --- Vacuum Tube Connectors
	VACUUM TUBE REPAIR KIT . . . . . Part No. *2275 215 Consists of: 1 - ---- --- Tube, 25 ft. 1/8" I.D. 30 - ---- --- Vacuum Tube Connectors
24-28-73	AIR OUTLET DUCT PACKAGE . . . . . Part No. *2279 917 Consists of: 1 - ---- --- Duct 1 - ---- --- Connector
24-28-322	LIQUID INDICATOR PACKAGE . . . . . Part No. 2275 579 Consists of: 1 - ---- --- Indicator 1 - ---- --- Gasket 2 - ---- --- Seal

NOTES

MyMopar.com

POLICE

1962 POLICE SPECIALS

PLYMOUTH	DODGE DART
Patroller "6" - 225 cu. in. Eng. Opt.	Pursuit "6" - 225 cu. in. Eng. Opt.
Patroller "8" - 318 cu. in. Eng. Std.	Pursuit "8" - 318 cu. in. Eng. Std.
Pursuit "8" - 361 cu. in. Eng. Opt.	* Pursuit "8" - 318 cu. in. Eng. Opt.
Pursuit "8" - 383 cu. in. Eng. Opt.	Pursuit "8" - 383 cu. in. Eng. Opt.
	Pursuit "8" - 383 cu. in. Eng. Opt.

* Equipped with Single 4 Barrel Carburetor

Body Type	Plymouth Body Code 6 Cyl.	Dodge Body Code 6 Cyl.	Plymouth Body Code 8 Cyl.	Dodge Body Code 8 Cyl.
2 D. Sedan	291	491	391	591
4 D. Sedan	293	493	393	593
4 D. Suburban	296	496	396	596

Plymouth Patroller "6" - 225 cu. in. Engine and Standard Heavy Duty Transmission are standard equipment.

Dodge Pursuit "6" - 225 cu. in. Engine and Standard Heavy Duty Transmission are standard equipment.

Plymouth Patroller "8" - 318 cu. in. Engine and Heavy Duty Transmission are standard equipment.

Dodge Pursuit "8" - 318 cu. in. Engine with two barrel carburetor and Heavy Duty Standard Transmission are standard equipment. The 318 cu. in. Engine with single four barrel carburetor is optional.

Plymouth Pursuit "8" - 361 and 383 cu. in. Engine is available with a single four barrel carburetor and a Heavy Duty Standard Transmission or an Automatic 3 Speed Transmission.

Dodge Pursuit "8" - 361 and 383 cu. in. Engine is available with a single four barrel carburetor and a Heavy Duty Standard Transmission or an Automatic 3 Speed Transmission.

Pursuit "8" - 383 cu. in. Eng. Opt. *Pursuit "8" - 383 cu. in. Eng. Opt.

The parts listed herein are standard on the Police Cars except where indicated. In the event the parts required are not listed here, refer to your "S" Series 1962 Parts Catalog when specifying parts.

NOTE: When specifying details for the 383 cu. in. Engine not listed herein refer to the Model SC2 w/383 cu. in. Engine as listed in the Engine section of the catalog.

CODE	PART NAME AND DESCRIPTION	PER CAR	PLYMOUTH	DODGE
	GROUP 1 - ACCESSORIES			
1-48-0	HEATER, Fresh Air Defroster specify parts as listed for Model 720 heater in your MoPar Passenger Car Parts Catalog		Same	Same
	GROUP 2 - FRONT SUSPENSION			
2-14-3	BAR, Torsion, Right	1	1857 778	1857 778
	BAR, Torsion, Left	1	1857 779	1857 779

★ Indicates use as required.
⊟ Indicates parts not listed in any previous parts book.
* Indicates change or addition.

Printed in U.S.A.
Prices and specifications subject to change without notice.
March 8, 1963 Supersedes May 1, 1962.

MyMopar.com

GROUP 3 - AXLE-REAR

All 6 Cylinder Police Cars have 8 3/4" diameter drive gears and 1 3/8" diameter Pinion Stem.

Two types of Differentials are being used on 8 Cylinder Police Cars.
With 1 3/8" diameter Pinion Stem. The Carrier has part number 1820657 embossed on it 2" below the Yoke.
The Carrier has part number 1820657 embossed on it 2" below the Yoke. With 1 3/4" diameter Pinion Stem.
With 1 3/4" diameter Pinion Stem. The Carrier has part number 1634985 embossed on it 2" below the Yoke.

Axle ratio's as follows are std., 3.23 to 1 ratio is std. on the following:

225 cu. in. Engine w/Automatic Transmission.

318 cu. in. Engine w/All Transmissions.

361 cu. in. Engine w/All Transmissions.

3.55 to 1 ratio is std. on the following:

225 cu. in. Engine w/Standard Transmission.

CODE	PART NAME AND DESCRIPTION	PER CAR	PLYMOUTH	DODGE
3-03-1	DIFFERENTIAL, w/CARRIER, 3.23 to 1 ratio, w/1 3/4" dia. Stem (8 cyl.)	1	*2070 811	*2070 811
	2.93 to 1 ratio, w/1 3/4" dia. Stem (8 cyl.)	1	*2070 579	*2070 579
3-03-3	CARRIER, w/CAPS, w/1 3/4" dia. Stem (8 cyl.)	1	*1634 984	*1634 984
3-19-1	GEAR and PINION SET, 3.23 to 1 ratio, w/1 3/4" dia. Stem (8 cyl.)	1	*2070 817	*2070 817
	2.93 to 1 ratio, w/1 3/4" dia. Stem (8 cyl.)	1	*2070 570	*2070 570
3-22-24	CONE, Front Bearing, w/ROLLERS, w/1 3/4" dia. Stem (8 cyl.)	1	*1401 808	*1401 808
	Rear, w/1 3/4" dia. Stem (8 cyl.)	1	*1404 472	*1404 472
3-22-25	CUP, Front Bearing, w/1 3/4" dia. Stem (8 cyl.)	2	*1401 810	*1401 810
	Rear, w/1 3/4" dia. Stem (8 cyl.)	1	*1327 847	*1327 847
3-22-27	WASHER, Rear Bearing, w/1 3/4" dia. Stem, .084" thk. (8 cyl.)	★	*1738 812	*1738 812
	w/1 3/4" dia. Stem, .086" thk. (8 cyl.)	★	*1738 813	*1738 813
	w/1 3/4" dia. Stem, .088" thk. (8 cyl.)	★	*1738 814	*1738 814
	w/1 3/4" dia. Stem, .090" thk. (8 cyl.)	★	*1738 815	*1738 815
	w/1 3/4" dia. Stem, .092" thk. (8 cyl.)	★	*1738 816	*1738 816
	w/1 3/4" dia. Stem, .094" thk. (8 cyl.)	★	*1738 817	*1738 817
	w/1 3/4" dia. Stem, .096" thk. (8 cyl.)	★	*1738 818	*1738 818
	w/1 3/4" dia. Stem, .098" thk. (8 cyl.)	★	*1738 819	*1738 819
	w/1 3/4" dia. Stem, .100" thk. (8 cyl.)	★	*1738 820	*1738 820
3-22-28	SHIM, Front Bearing Adjusting			
	w/1 3/4" dia. Stem, .014" thk. (8 cyl.)	★	*1738 805	*1738 805
	w/1 3/4" dia. Stem, .016" thk. (8 cyl.)	★	*1738 806	*1738 806
	w/1 3/4" dia. Stem, .018" thk. (8 cyl.)	★	*1738 807	*1738 807
	w/1 3/4" dia. Stem, .022" thk. (8 cyl.)	★	*1829 442	*1829 442
	w/1 3/4" dia. Stem, .024" thk. (8 cyl.)	★	*1829 443	*1829 443
	w/1 3/4" dia. Stem, .026" thk. (8 cyl.)	★	*1829 444	*1829 444
3-22-45	OIL SEAL, Front Bearing, w/1 3/4" dia. Stem (8 cyl.)	1	*1828 719	*1828 719
3-33-4	SHIM, w/1 3/4" dia. Stem, .005" thk. (8 cyl.)	★	*1137 203	*1137 203
	w/1 3/4" dia. Stem, .012" thk. (8 cyl.)	★	* 681 320	* 681 320
	w/1 3/4" dia. Stem, .030" thk. (8 cyl.)	★	* 681 322	* 681 322

★ Indicates use as required.
⊟ Indicates parts not listed in any previous parts book.
May 1, 1962 Supersedes Nov. 30, 1961.

Printed in U.S.A.
Prices and specifications subject to change without notice.
* Indicates change or addition.

MyMopar.com

CODE	PART NAME AND DESCRIPTION	PER CAR	PLYMOUTH	DODGE

GROUP 5 - BRAKE-SERVICE

5-03-1	PACKAGE, Brake Shoe Lining	1	2298 848	2298 848
5-03-5	SHOE & LINING, Front Wheel, Front	2	2401 011	2401 011
	SHOE & LINING, Front Wheel, Rear	2	2401 012	2401 012
	SHOE & LINING, Rear Wheel, Front	2	2401 007	2401 007
	SHOE & LINING, Rear Wheel, Rear	2	2401 008	2401 008

GROUP 6 - CLUTCH

6 Cylinder 10" Clutch

6-13-1	DISC, Clutch	1	2200 069	2200 069
6-13-4	FACING, Clutch Disc Front	1	2201 218	2201 218
6-14-1	PRESSURE PLATE, w/COVER	1	*2266 235	*2266 235

8 Cylinder 10 1/2" Clutch

6-13-1	DISC, Clutch	1	2266 232	2266 232
6-13-4	FACING, Clutch Disc	1	2266 233	2266 233
6-14-1	PRESURE PLATE, w/COVER	1	2122 254	2122 254

GROUP 8 - ELECTRICAL

8-28-3	ALTERNATOR, w/PULLEY, 40 amp. For alternator details see Parts Catalog.	1	2095 100	2095 100
8-32-2	HORN, Upper	1	2298 793	2298 793
	HORN, Lower	1	2298 794	2298 794
8-33-4	RING, Horn Blowing	1	1738 214	1738 214
8-37-372	SPEEDOMETER, Calibrated	1	2290 331	2258 260

GROUP 9 - ENGINE

9-01-24	ENGINE, Short - 225 cu. in. 6 Cyl.	1	2206 132	2206 132
	ENGINE, Short - 318 cu. in. 8 Cyl.	1	2268 306	2268 306
	ENGINE, Short - 361 cu. in. 8 Cyl.	1	2268 314	2268 314
	ENGINE, Short - 383 cu. in. 8 Cyl.	1	*2268 318	*2268 318
9-15-1	CAMSHAFT, w/383 cu. in. Engine	1	*2129 203	*2129 203
9-48-7	MANIFOLD, Intake w/383 cu. in. Engine	1	*1859 300	*1859 300
9-58-1	PACKAGE, Manifold Heat Control w/383 cu. in. Engine	1	*2279 887	*2279 887

NOTE: When specifying details for the 383 cu. in. Engine not listed herein, refer to the SC2 w/383 cu. in. Engine as listed in the Engine section of the catalog.

★ Indicates use as required.
⊟ Indicates parts not listed in any previous parts book.
* Indicates change or addition.

Printed in U.S.A.
Prices and specifications subject to change without notice.
May 1, 1962 Supersedes Nov. 30, 1961.

MyMopar.com

CODE	PART NAME AND DESCRIPTION	PER CAR	PLYMOUTH	DODGE
	GROUP 10 - ENGINE OILING			
10-26-6	OIL FILTER, w/Replaceable Cartridge (225 cu. in. Engine)	1	2128 548	2128 548
10-26-8	CARTRIDGE (225 cu. in. Engine)	1	2129 023	2129 023
	CARTRIDGE (318 cu. in. Engine)	1	2129 023	2129 023
10-26-14	SHELL, w/NUT, Spring and Stud (318 cu. in. Engine)	1	1557 573	1557 573
	GROUP 13 - FRAME			
13-35-1	SHIELD, Battery Heat	1	2201 525	2201 525
	GROUP 14 - FUEL			
14-30-1	CARBURETOR, w/o Closed Vent, w/383 cu. in. Eng., All Transmission, 4-Barrel	1	2402 211	2402 211
	CARBURETOR, w/Closed Vent, w/383 cu. in. Eng., All Transmission, 4-Barrel	1	2402 212	2402 212
	GROUP 16 - PROPELLER SHAFT AND UNIVERSAL JOINT			
	NOTE: When it becomes necessary to service Propeller Shafts or Front Universal Joints on Police Cars it is recommended that the Shaft be replaced as a COMPLETE Assembly.			
16-02-1	SHAFT, 55 3/4" lgh., 3" dia., SP2, SD2, w/Std. Heavy Duty Trans., includes U/JOINTS	1	⊟2401 350	⊟2401 350
	55 3/4" lgh., 3" dia., SP2, SD2, w/Std. Heavy Duty Trans., less U/Joints	1	*2401 351	*2401 351
	53 5/8" lgh., 2 3/4" dia., SP2, SD2, w/3 Speed Auto. Trans., includes U/JOINTS	1	⊟2401 356	⊟2401 356
	53 5/8" lgh., 2 3/4" dia., SP2, SD2, w/3 Speed Auto. Trans., less U/Joints	1	*2401 355	*2401 355
16-07-4	COVER, Universal Joint Pkg. (8 cyl.)	1	2275 514	2275 514
	GROUP 17 - SPRINGS			
17-11-3	SPRING, Rear (6 cyl.) (except Sub.)	2	2275 862	2275 862
	SPRING, Rear (8 cyl.) (except Sub.)	2	2298 512	2298 512
	SPRING, Rear, Right (6 cyl.) (Sub.)	1	2275 866	2275 866
	SPRING, Rear, Left (6 cyl.) (Sub.)	1	2275 867	2275 867
	SPRING, Rear, Right (8 cyl.) (Sub.)	1	2275 867	2275 867
	SPRING, Rear, Left (8 cyl.) (Sub.)	1	2275 868	2275 868
17-23-3	SHOCK ABSORBER, Front (All)	2	2275 883	2275 883
	SHOCK ABSORBER, Rear (All)	2	2275 849	2275 849
	GROUP 21 - TRANSMISSION			
21-02-1	TRANSMISSION ASSY., Manual Heavy Duty Std. (6 cyl.)	1	2204 876	2204 876
	TRANSMISSION ASSY., Automatic 3 Speed (6 cyl.)	1	2204 841	2204 841
	TRANSMISSION ASSY., Manual Heavy Duty Std. (8 cyl.)	1	*2400 801	*2400 801
	TRANSMISSION ASSY., Automatic 3 Speed (8 cyl.)	1	2204 824	2204 824
	GROUP 22 - WHEELS			
22-03-2	HUB and DRUM, Rear, 11" x 2 1/2" Brakes, Right	1	2265 354	---- ---
	Left	1	---- ---	2265 355

★ Indicates use as required.
⊟ Indicates parts not listed in any previous parts book.
March 8, 1963 Supersedes May 1, 1962.

Printed in U.S.A.
Prices and specifications subject to change without notice.
* Indicates change or addition.

MyMopar.com

GROUP 23 - BODY

CODE	PART NAME AND DESCRIPTION	PER CAR	PLYMOUTH	DODGE
23-20-8	FLOOR MAT, Front (black)	1	2273 062	---- ---
	FLOOR MAT, Front (black)	1	---- ---	*2274 866
23-20-41	FLOOR MAT, Rear (black)	1	*2273 075	---- ---
	FLOOR MAT, Rear (black)	1	---- ---	2249 372
23-67-5	ARM, Windshield Wiper, Right	1	*2291 978	*2291 978
	Left	1	*2291 977	*2291 977
23-76-3	ARM REST, Front and Rear	4	2212 691	2212 691
23-81-3	HANDLE, Pull-To (right rear door)	1	1697 413	1697 413
23-103-3	SUN VISOR, Left	1	2273 285	2272 104

NOTES

★ Indicates use as required.
⊟ Indicates parts not listed in any previous parts book.
* Indicates change or addition.

Printed in U.S.A.
Prices and specifications subject to change without notice.
May 1, 1962.

MyMopar.com

CODE	PART NAME AND DESCRIPTION	PER CAR	PLYMOUTH	DODGE

NOTES

★ Indicates use as required.
⊟ Indicates parts not listed in any previous parts book.
May 1, 1962.

Printed in U.S.A.
Prices and specifications subject to change without notice.
* Indicates change or addition.

MyMopar.com

1962 POLICE
CHRYSLER SC1 ENFORCER

Body Type	Body Code
4 Door Sedan	893
4 Door Suburban (2 Seater)	898

361 cu. in. Engine is standard equipment.
383 cu. in. Engine is optional.
Heavy Duty Manual 3 Speed Transmission is standard equipment for both Engines.
The Automatic 3 Speed Transmission with standard Governor is optional equipment for both Engines. The Automatic 3 Speed Transmission with High Speed Governor is optional with 383 cu. in. Engine only.

The parts listed herein are standard on the Police Cars except where indicated as optional. In the event the parts required are not listed herein, refer to your 1962 "S" Series Catalog when specifying.

GROUP 1 - ACCESSORIES

HEATER, Fresh Air Defroster specify parts as listed for Model 750 heater in your MoPar Parts Passenger Car Catalog.

GROUP 2 - FRONT SUSPENSION

CODE	PART NAME AND DESCRIPTION	PER CAR	CHRYSLER	
2-14-3	BAR, Torsion, Right	1	1825 606	
	Left	1	1825 607	

GROUP 3 - AXLE-REAR

8 3/4" Diameter Drive Gears 3.23 to 1 Ratio	Standard Equipment
8 3/4" Diameter Gears 3.23 to 1 Ratio	Sure-Grip Optional Equipment

GROUP 5 - BRAKE-SERVICE

5-03-1	LINING PACKAGE, Brake Shoe	1	2240 227	
5-03-5	SHOE, w/LINING, Front and Rear Wheel, Front Shoe	4	2201 634	
	Front and Rear Wheel, Rear Shoe	4	2200 118	

GROUP 6 - CLUTCH

11" CLUTCH

6-09-1	HOUSING	1	2128 351	
6-10-2	PAN	1	1739 616	
6-13-1	DISC	1	2208 273	
6-13-4	FACING, Disc	2	2208 272	
6-14-1	COVER, w/PLATE	1	2208 274	
6-16-1	SPRING, Pressure, 7 3/4 Orange Coils	6	864 397	
	6 3/4 White Coils	6	1406 504	

★ Indicates use as required.
⊟ Indicates parts not listed in any previous parts book.
* Indicates change or addition.

Printed in U.S.A.
Prices and specifications subject to change without notice.
Nov. 30, 1961 Supersedes Sept. 15, 1961.

MyMopar.com

CODE	PART NAME AND DESCRIPTION	PER CAR	CHRYSLER
	GROUP 7 - COOLING		
7-02-1	FAN, Heavy Duty	1	2265 034
7-08-2	SHROUD, Radiator Fan, Upper	1	1902 720
	Lower	1	1903 600
	GROUP 8 - ELECTRICAL		
8-33-4	RING, Horn Blowing	1	1738 214
8-37-372	SPEEDOMETER, Available w/60 amp. Ammeter only	1	2290 394
	For Leece-Neville Alternators and Ammeters see Note in front of Group 8-28-0 in Parts Catalog.		
	GROUP 9 - ENGINE		
9-01-24	ENGINE, Short, 361 cu. in.	1	2268 314
	383 cu. in.	1	2268 318
	GROUP 11 - EXHAUST		
	DUAL EXHAUST		
11-01-1	MUFFLER, Zinc Coated, 4 D. Sed.	2	2208 405
	Aluminized, 4 D. Sed.	2	2122 831
	Front, Sub.	2	2122 835
	Rear, Sub.	2	2122 834
11-02-1	CLAMP PACKAGE, Exhaust Pipe Extension	★	1843 407
	Extension to Muffler, 4 D. Sed.	2	1603 364
	Extension to Front Muffler, Sub.	2	2240 312
	Intermediate Pipe to Front Muffler, Sub.	2	1843 008
	Tail Pipe, Rear, 4 D. Sed.	★	2240 312
	Sub.	2	2240 311
	Tail Pipe to Muffler, 4 D. Sed.	★	1843 008
	Sub.	2	1843 009
11-02-4	SUPPORT, Front Muffler, w/INSULATOR, Sub., Right	1	2122 796
	Sub., Left	1	1948 549
11-05-1	PIPE, Exhaust, 4 D. Sed., Right	1	2122 790
	Left	1	2122 788
	Sub., Right	1	2123 477
	Left	1	2123 475
11-05-4	PIPE, Exhaust Extension, 4 D. Sed., Right	1	1948 565
	Left	1	1948 569
	Sub., Right	1	2123 492
	Left	1	2123 491
11-05-12	FLANGE, Extension Pipe Ball Joint	2	1946 637
11-06-3	NUT, Ball Joint Flange	★	1946 648
11-06-8	GASKET, Flange	★	1855 029
11-09-3	PIPE, Tail, 4 D. Sed., Right	1	2266 034
	Left	1	2266 033
	Sub., Right	1	1948 589
	Left	1	1948 588

★ Indicates use as required.
⊟ Indicates parts not listed in any previous parts book.
Nov. 30, 1961 Supersedes Sept. 15, 1961.

Printed in U.S.A.
Prices and specifications subject to change without notice.
* Indicates change or addition.

MyMopar.com

CODE	PART NAME AND DESCRIPTION	PER CAR	CHRYSLER
	GROUP 11 - EXHAUST - Cont'd		
	DUAL EXHAUST		
11-09-3	PIPE, Tail, Intermediate, Sub., Right	1	1948 536
	Left	1	1948 535
11-10-3	SUPPORT, Tail Pipe, w/INSULATOR, 4 D. Sed., Front	2	2123 440
	4 D. Sed., Rear, Right	1	2208 391
	4 D. Sed., Rear, Left	1	2208 390
	Sub., Front	2	2123 438
	Sub., Rear, Right	1	2208 394
	Sub., Rear, Left	1	2208 393
	GROUP 14 - FUEL		
14-30-1	CARBURETOR, 4 Barrel, w/383 cu. in. Engine	1	2268 768
	GROUP 16 - PROPELLER SHAFT AND UNIVERSAL JOINT		
16-02-1	SHAFT, 58 3/4" lgh., 3" dia., SC2, w/Std. Heavy Duty and 3 Speed Auto. Trans., 383 cu. in. Eng., less U/Joints	1	*2401 641
	59 1/4" lgh., 3" dia., SC2, w/Std. Heavy Duty and 3 Speed Auto. Trans., 383 cu. in. Eng. less U/Joints	1	⊟2206 994
	GROUP 17 - SPRING		
17-11-3	SPRING, Rear, 4 D. Sedan	2	2240 686
	Sub.	2	2275 879
17-23-3	ABSORBER PACKAGE, Shock, Rear	2	2240 360
	Front	2	2298 807
	GROUP 19 - STEERING		
19-14-1	JACKET, Steering Column	1	2401 192
19-15-4	TUBE, w/HUB, Steering Gear	1	2200 747
19-15-12	GROMMET, Tube	1	2265 339
19-30-4	WHEEL, Steering, Black	1	2401 234
	White	1	2401 193
	GROUP 21 - TRANSMISSION		
21-02-1	TRANSMISSION, Standard	1	⊟2400 238
	Automatic, w/Standard Governor	1	1942 275
	Automatic, w/High Speed Governor	1	2205 190
	GROUP 22 - WHEELS		
22-01-42	COVER, Wheel, for 15" Wheel, Unmarked	4	2260 160
22-08-5	CAP, Hub, for 15" Wheel	4	1943 733
	GROUP 23 - BODY		
23-21-8	MIRROR, Inside Rear View, Header Mounted, Clear	1	2162 286
	Prismatic	1	2162 414
23-21-14	BRACKET, Mirror Mounting, Header Mounted	1	2082 978
23-23-39	MOULDING PACKAGE, Rear Quarter Panel	2	2275 993
	CLIP	4	6000 820
	CLIP	16	6000 822
23-103-3	PANEL, Visor Trim (use with header mounted mirror)	2	2178 393

★ Indicates use as required.
⊟ Indicates parts not listed in any previous parts book.
* Indicates change or addition.

Printed in U.S.A.
Prices and specifications subject to change without notice.
March 8, 1963 Supersedes Nov. 30, 1961.

MyMopar.com

TAXI

1962 TAXI SPECIALS

Valiant - 4 Door - 170 cu. in. Engine - Standard

Plymouth 6 - 4 Door - 225 cu. in. Engine - Standard

Plymouth 8 - 4 Door - 318 cu. in. Engine - Standard

Dodge 6 - 4 Door - 225 cu. in. Engine - Standard

Dodge 8 - 4 Door - 318 cu. in. Engine - Standard
361 cu. in. Engine - Optional

Body Type	Body Code
Valiant Taxi "6" - 4 Door	183
Plymouth Taxi "6" - 4 Door	283
Plymouth Taxi "8" - 4 Door	383
Dodge Taxi "6" - 4 Door	483
Dodge Taxi "8" - 4 Door	583

Taxi - Plymouth, Dodge "6" - The 225 6 cyl. cu. in. Engine is standard equipment.

Taxi - Valiant, Lancer "6" - The 170 cu. in. Engine and standard transmission are standard equipment.

Taxi - Plymouth, Dodge "8" - The 318 cu. in. Engine and heavy duty standard transmission are standard equipment.

The parts listed below are standard on the above Taxicabs except where indicated. In the event the parts required are not listed herein refer to your "S" Series 1962 Parts Catalog when specifying parts.

CODE	PART NAME AND DESCRIPTION	PER CAR	PLYMOUTH DODGE	VALIANT LANCER

GROUP 1 - ACCESSORIES

Plymouth and Dodge - Heater - Fresh Air w/Defroster, specify parts as listed for Model 720 Heater in your MoPar Passenger Car Catalog.

Valiant and Lancer - Heater - Fresh Air Defroster, specify parts as listed for Model 719 Heater in your MoPar Passenger Car Catalog.

GROUP 2 - FRONT SUSPENSION

2-14-3	BAR, Torsion, Right	1	1857 778	2071 626
	BAR, Torsion, Left	1	1857 779	2071 627

★ Indicates use as required.
⊟ Indicates parts not listed in any previous parts book.
Nov. 30, 1961 Supersedes Sept. 15, 1961.

Printed in U.S.A.
Prices and specifications subject to change without notice.
* Indicates change or addition.

MyMopar.com

CODE	PART NAME AND DESCRIPTION	PER CAR	PLYMOUTH DODGE	VALIANT LANCER

GROUP 3 - AXLE-REAR

All 6 and 8 cylinder Plymouth and Dodge Taxicabs use 8 3/4" diameter drive gear rear axles. Axle ratios as follows are standard.
2.93 to 1 ratio is standard on the following:

225 and 318 cu. in. Engine with automatic transmission (Plymouth and Dodge).

3.55 to 1 ratio is standard on the following:

170 cu. in. Engine with manual std. transmission (Valiant and Lancer).
225 and 318 cu. in. Engine with manual std. transmission (Plymouth and Dodge).

3.23 to 1 ratio is standard on the following:

170 cu. in. Engine with automatic transmission (Valiant and Lancer).

GROUP 5 - BRAKE-SERVICE

11" x 3" Front and 11" x 2.5" Rear Brakes are standard on Plymouth and Dodge.

5-03-1	PACKAGE, Brake Shoe Lining	1	*2421 314	---- ---
5-03-5	SHOE & LINING, Front Wheel, Front	2	*2401 806	---- ---
	SHOE & LINING, Front Wheel, Rear	2	*2401 807	---- ---
	SHOE & LINING, Rear Wheel, Front	2	*2401 800	---- ---
	SHOE & LINING, Rear Wheel, Rear	2	*2401 801	---- ---

GROUP 6 - CLUTCH

6 Cylinder 10" Clutch

6-13-1	DISC, Clutch	1	2200 069	2200 069
6-13-4	FACING, Clutch Disc Front	1	2201 218	2201 218
	FACING, Clutch Disc Rear	1	2201 217	2201 217
6-14-1	PRESSURE PLATE, w/COVER	1	2200 032	2201 212

8 Cylinder 10 1/2" Clutch

6-13-1	DISC, Clutch	1	2266 232	---- ---
6-13-4	FACING, Clutch	1	2266 233	---- ---
6-14-1	PRESSURE PLATE, w/COVER	1	2122 254	---- ---

GROUP 8 - ELECTRICAL

8-28-3	ALTERNATOR, 40 amp., w/PULLEY	1	2095 100	2095 100
	For Alternator details see Catalog.			

★ Indicates use as required.
B Indicates parts not listed in any previous parts book.
* Indicates change or addition.

Printed in U.S.A.
Prices and specifications subject to change without notice.
May 1, 1962 Supersedes Nov. 30, 1961.

MyMopar.com

CODE	PART NAME AND DESCRIPTION	PER CAR	PLYMOUTH DODGE	VALIANT LANCER
	GROUP 8 - ELECTRICAL - Cont'd			
8-31-2	PACKAGE, Open Door Indicator Lamp	1	2298 767	2298 767
8-32-2	HORN, Upper	1	2298 793	---- ---
	HORN, Upper	1	2298 794	---- ---
	HORN, Right	1	---- ---	2298 792
	HORN, Left	1	---- ---	2298 791
	GROUP 9 - ENGINE			
9-01-24	ENGINE, Short, 170 cu. in. 6 Cyl. (see Note)	1	---- ---	2206 136
	ENGINE, Short, 225 cu. in. 6 Cyl.	1	2206 132	2264 401
	ENGINE, Short, 318 cu. in. 8 Cyl.	1	2268 306	---- ---
	ENGINE, Short, 361 cu. in. 8 Cyl.	1	2268 314	---- ---

NOTE: When specifying details for the 170 cu. in. Engine use 170 cu. in. Engine parts listed under Valiant and Lancer Column.

	GROUP 10 - ENGINE OILING			
10-26-6	OIL FILTER, w/Replaceable Cartridge (170 & 225 cu. in. Engine).	1	2128 548	2128 548
10-26-8	CARTRIDGE (170 & 225 cu. in. Engine)	1	2129 023	2129 023
	CARTRIDGE (318 cu. in. Engine)	1	2129 023	---- ---
10-26-14	SHELL, w/NUT, SPRING & STUD (318 cu. in. Engine)	1	1557 573	---- ---
	GROUP 13 - FRAME			
13-35-1	SHIELD, Battery Heat	1	2201 525	---- ---
	GROUP 17 - SPRINGS			
17-11-3	SPRING, Rear (6 cyl.)	2	2275 862	---- ---
	SPRING, Rear (8 cyl.)	2	2298 512	---- ---
	SPRING, Rear (6 cyl.) Right	1	---- ---	2275 855
	SPRING, Rear (6 cyl.) Left	1	---- ---	2298 513
17-23-3	SHOCK ABSORBER, Front	2	2275 883	---- ---
	SHOCK ABSORBER, Rear	2	2275 849	---- ---
	SHOCK ABSORBER, Front	2	---- ---	2298 804
	SHOCK ABSORBER, Rear	2	---- ---	2298 912
	GROUP 21 - TRANSMISSION			
21-02-1	TRANSMISSION ASSY., Manual Heavy Duty Std. (6 cyl.)	1	2204 876	---- ---
	TRANSMISSION ASSY., Manual Standard	1	---- ---	2204 883
	TRANSMISSION ASSY., Automatic 3 Speed (6 cyl.)	1	2204 841	---- ---
	TRANSMISSION ASSY., Automatic 3 Speed	1	---- ---	2204 916
	TRANSMISSION ASSY., Manual Heavy Duty Std. (8 cyl.)	1	*2400 801	---- ---
	TRANSMISSION ASSY., Automatic 3 Speed (8 cyl.)	1	2204 824	---- ---

★ Indicates use as required.
B Indicates parts not listed in any previous parts book.
Printed in U.S.A.
Prices and specifications subject to change without notice.
* Indicates change or addition.

MyMopar.com

CODE	PART NAME AND DESCRIPTION	PER CAR	PLYMOUTH DODGE	VALIANT LANCER
	GROUP 22 - WHEELS			
22-03-2	HUB and DRUM, Rear, 11" x 2 1/2" Brakes, Right	1	---- ---	*2265 354
	Left	1	---- ---	*2265 355
	GROUP 23 - BODY			
23-17-2	CYLINDER PACKAGE, Door Ignition and Manual Tailgate Lock, w/Universal KEYS, Sub.	1	2241 871	
23-20-8	FLOOR MAT, Front (black)	1	2273 062	---- ---
	FLOOR MAT, Front (black)	1	---- ---	*2274 866
23-20-41	FLOOR MAT, Rear (black)	1	*2273 075	---- ---
	FLOOR MAT, Rear (black)	1	---- ---	2249 372
23-76-3	ARM REST, Front and Rear	4	2212 691	2212 691
23-81-3	HANDLE, Pull-To (right rear door)	1	1697 413	1697 413
23-103-3	SUN VISOR, Left	1	2273 285	2272 104

NOTES

★ Indicates use as required.
B Indicates parts not listed in any previous parts book.
* Indicates change or addition.

Printed in U.S.A.
Prices and specifications subject to change without notice.
May 1, 1962 Supersedes Nov. 30, 1961.

MyMopar.com

CODE	PART NAME AND DESCRIPTION	PER CAR	VALIANT LANCER	PLYMOUTH DODGE	CHRYSLER IMPERIAL

NOTES

★ Indicates use as required.
⊟ Indicates parts not listed in any previous parts book.
November 30, 1961.

Printed in U.S.A.
Prices and specifications subject to change without notice.
* Indicates change or addition.

MyMopar.com

GROUP 1 - ACCESSORIES

PARTS INDICATED BY NAME ONLY - ORDER BY DESCRIPTION

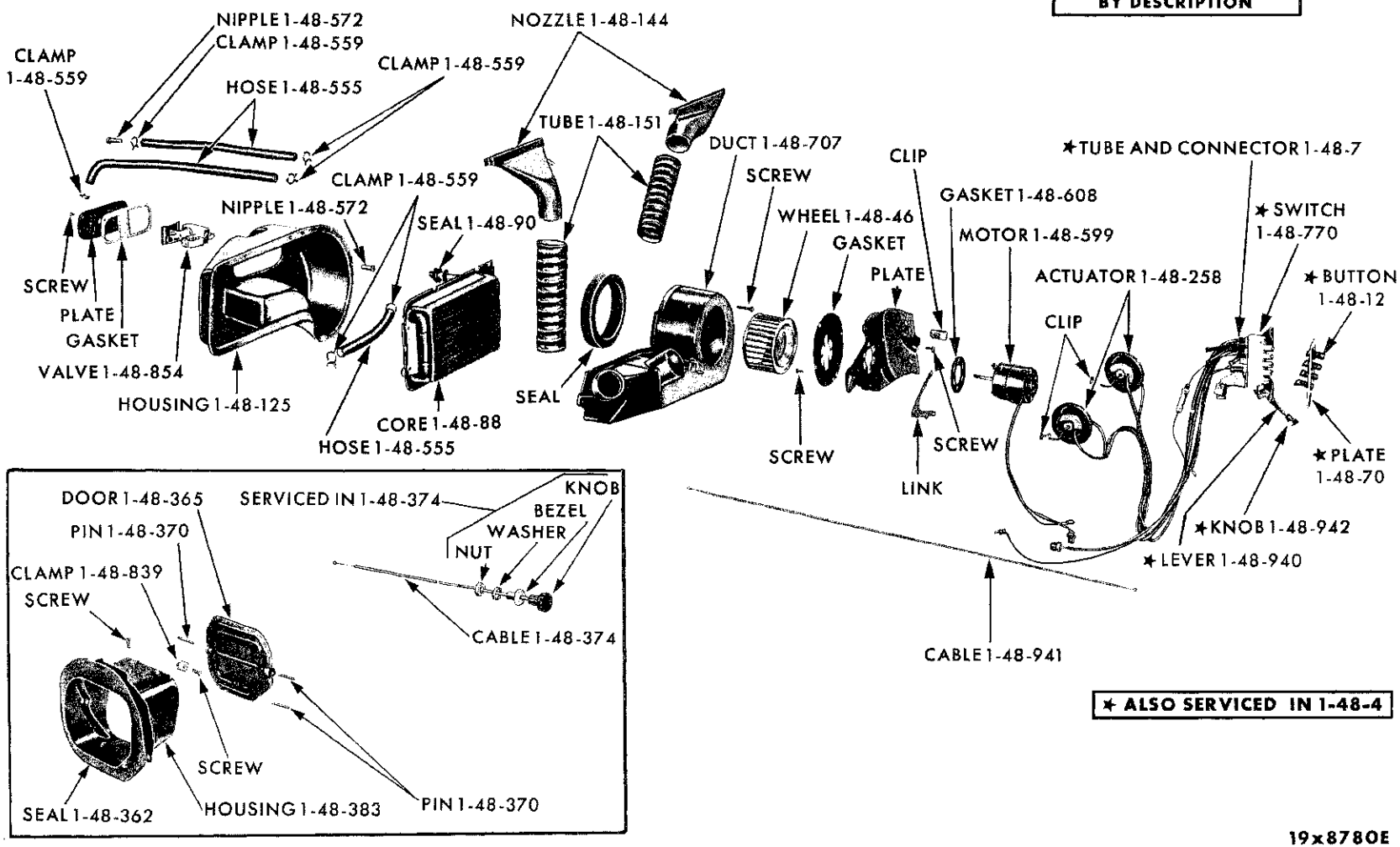

★ ALSO SERVICED IN 1-48-4

19x8780E

HEATER - VALIANT SV1 AND LANCER SL1

MyMopar.com

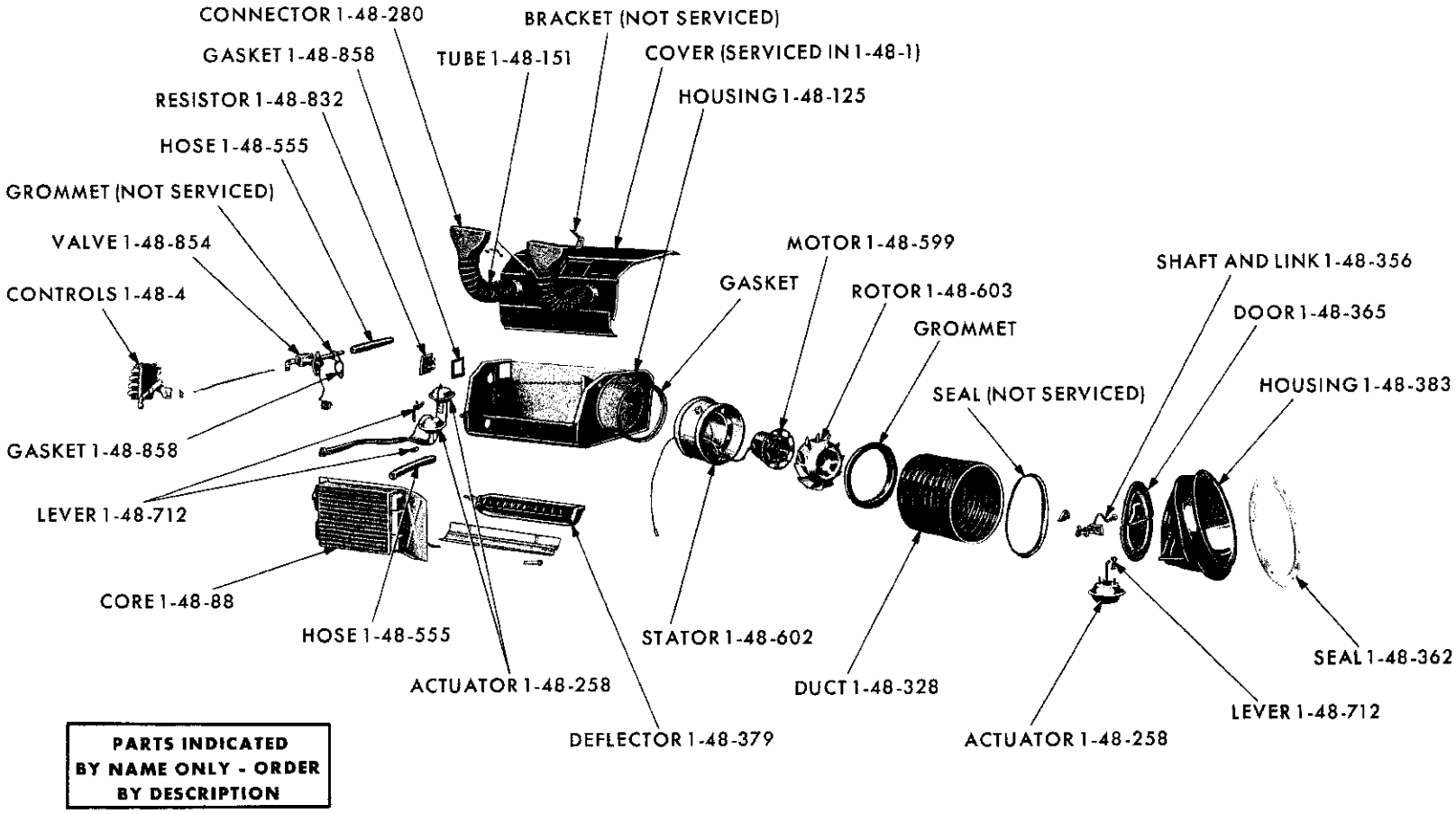

HEATER (MODEL 720) - PLYMOUTH SP1-2 AND DODGE SD1-2

MyMopar.com

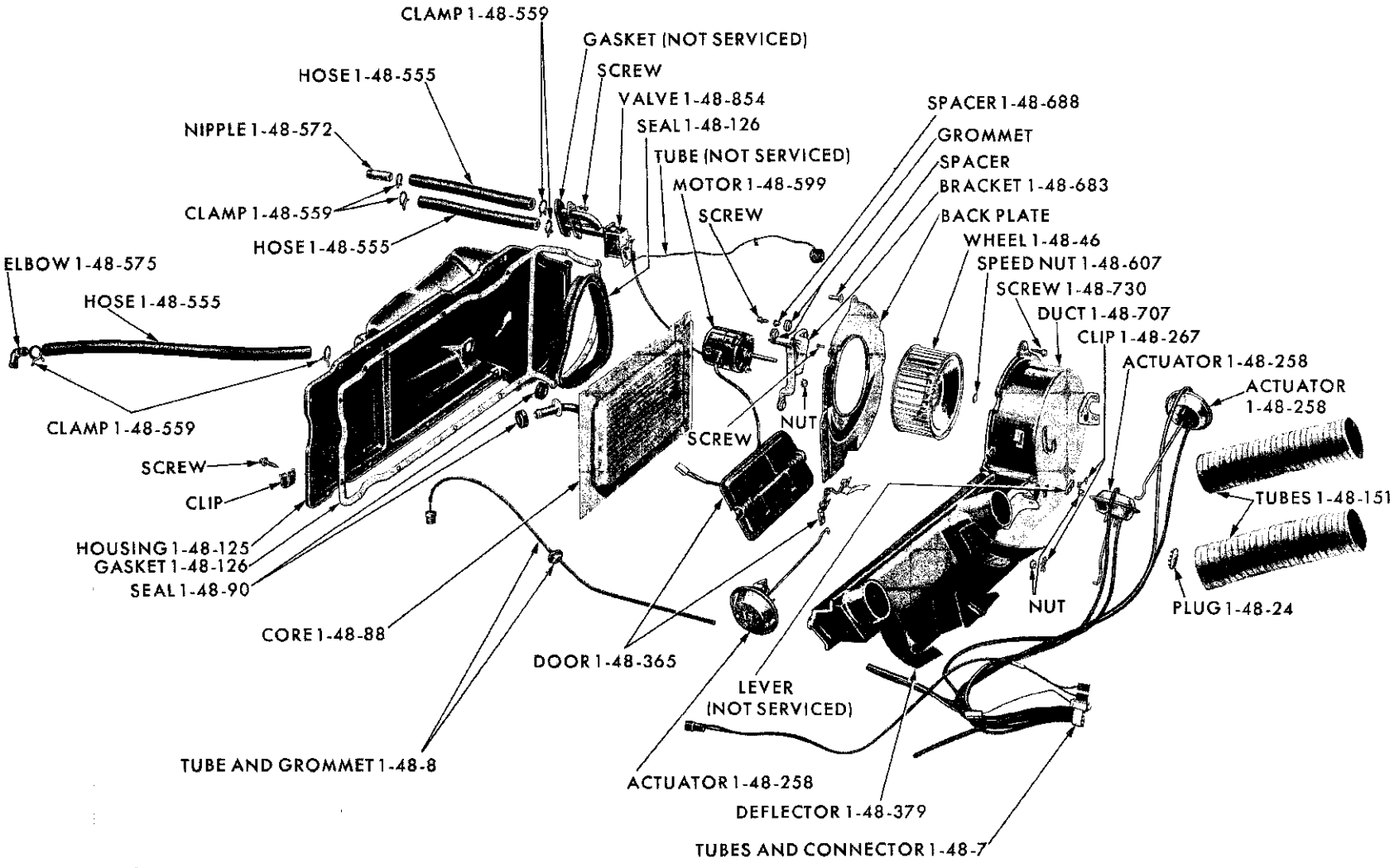

HEATER - CHRYSLER SC1-2-3 AND IMPERIAL SY1

MyMopar.com

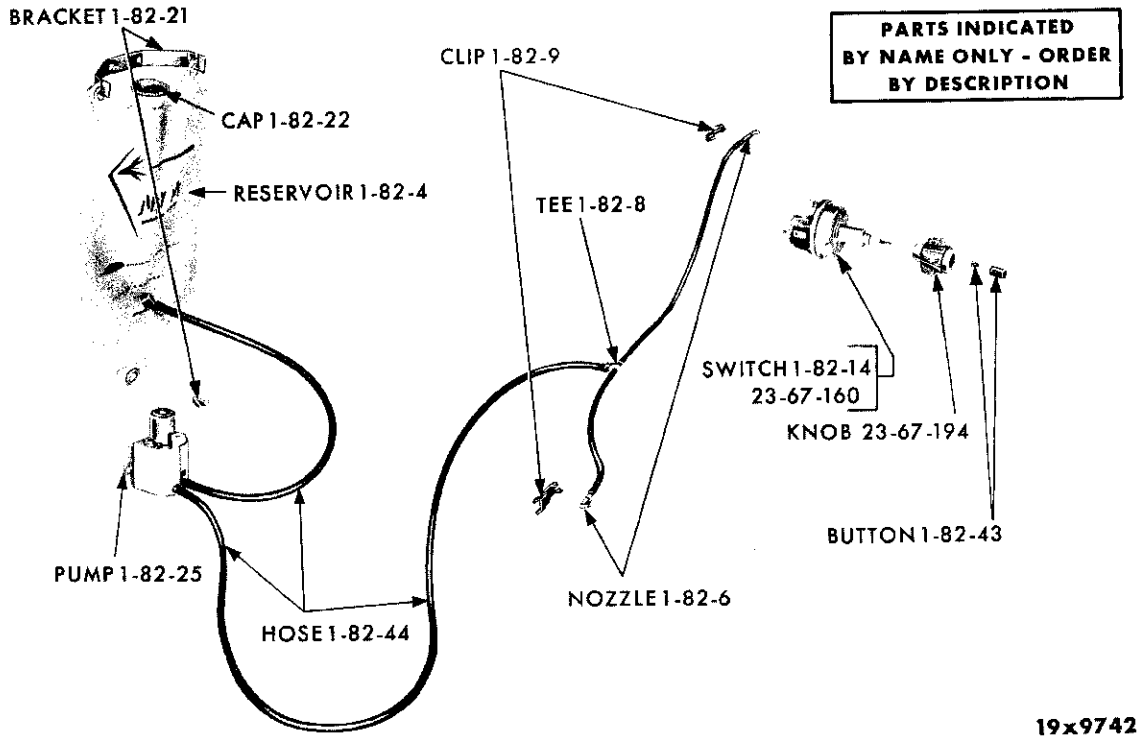

WINDSHIELD WASHER SYSTEM - ELECTRIC

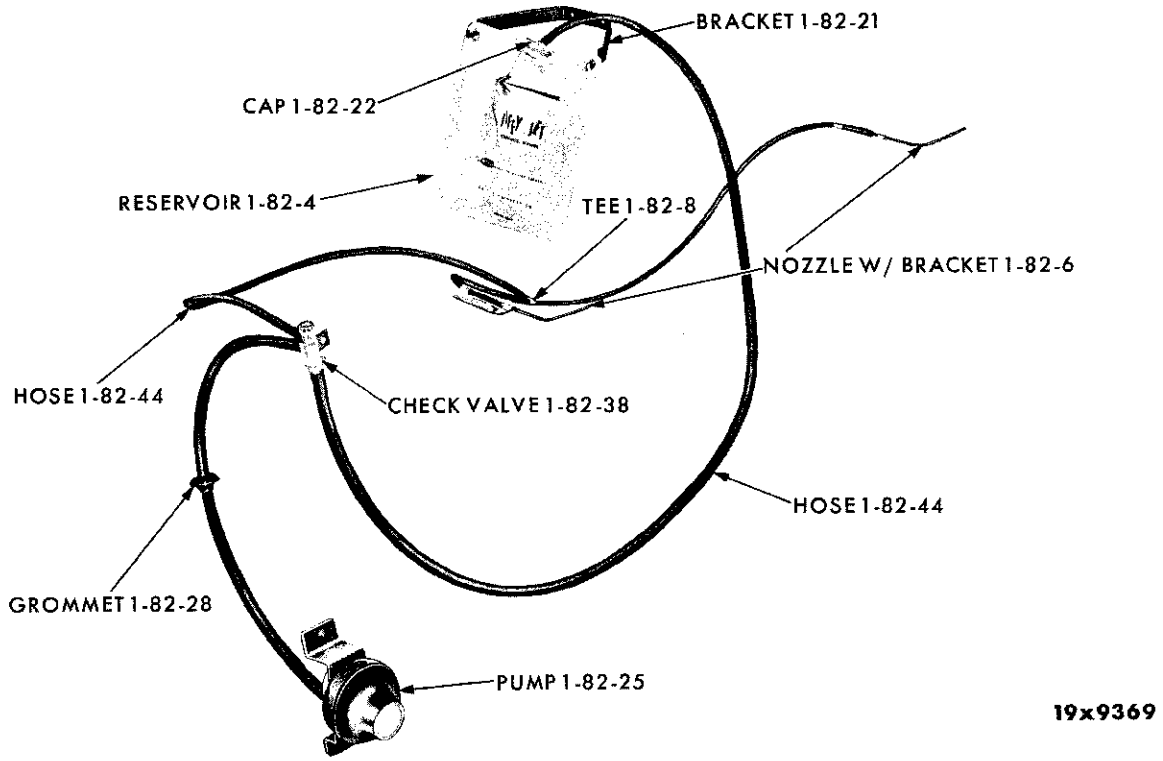

WINDSHIELD WASHER SYSTEM - VALIANT SV1 AND LANCER SL1

MyMopar.com

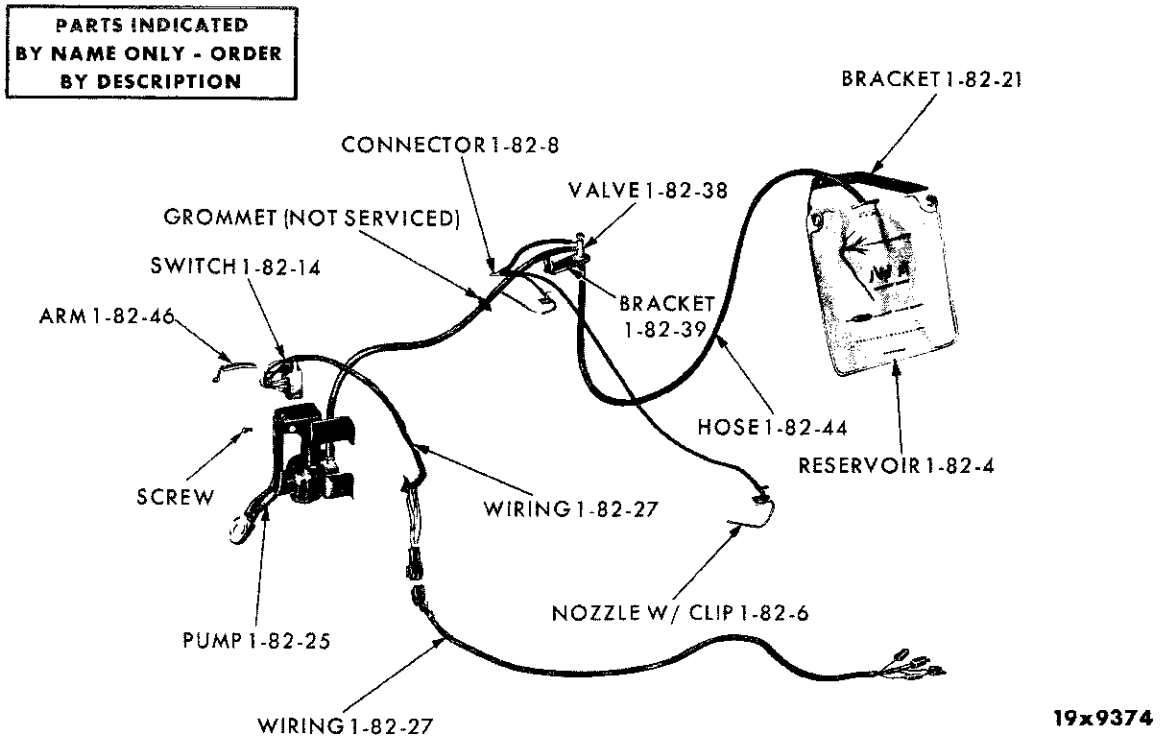

WINDSHIELD WASHER SYSTEM - PLYMOUTH SP1-2 AND DODGE SD1-2

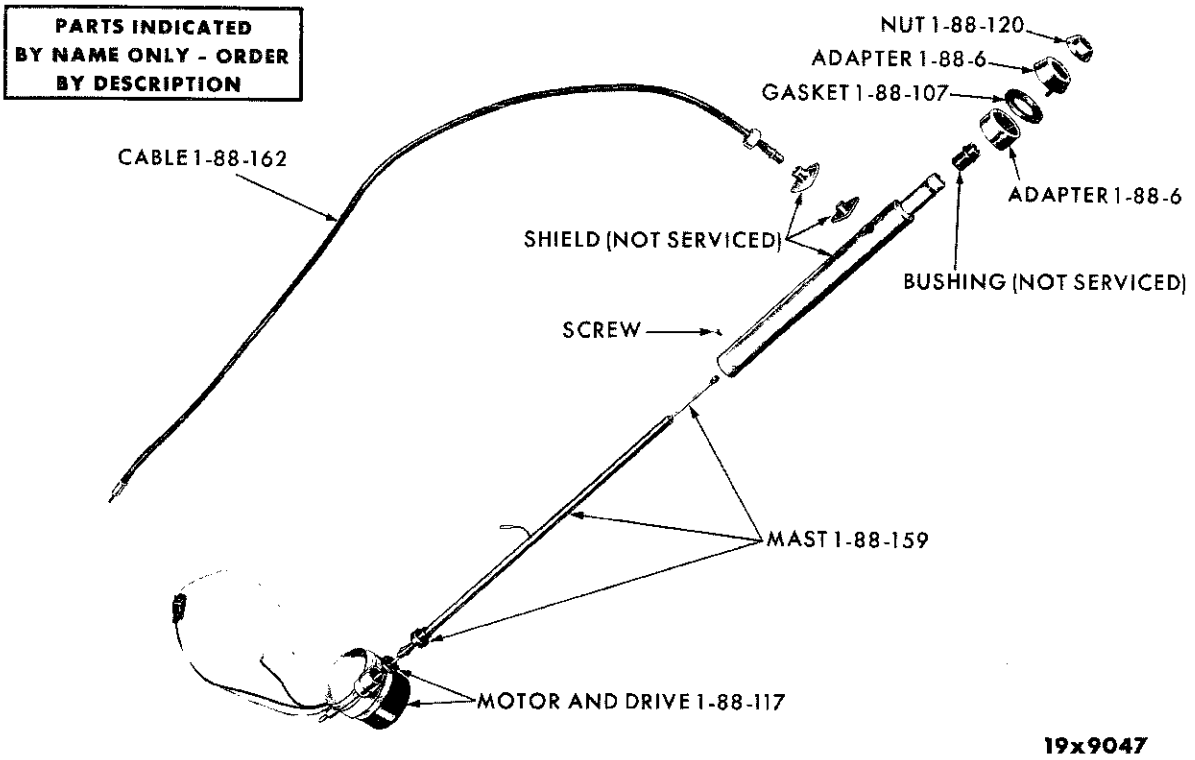

POWER ANTENNA - IMPERIAL SY1

MyMopar.com

CODE	PART NAME AND DESCRIPTION	CYL.	PER CAR	VALIANT LANCER	PLYMOUTH DODGE	CHRYSLER IMPERIAL

NOTES

★ Indicates use as required.
⊟ Indicates parts not listed in any previous parts book.

Printed in U.S.A.
Prices and specifications subject to change without notice.

MyMopar.com

CODE	PART NAME AND DESCRIPTION	CYL.	PER CAR	VALIANT LANCER	PLYMOUTH DODGE	CHRYSLER IMPERIAL
1-01-0	**BUMPER OR GRILLE GUARD**					
1-01-1	GUARD PACKAGE, Bumper, SD1, SD2, Front or Rear		★	2196 449	2279 890	
1-04-0	**AUTOMATIC HEADLAMP DIMMER**					
1-04-4	SCANNER, Factory Installed, SY1		1	---- ---	---- ---	2096 894
1-04-6	BASE, Scanner, SY1		1	---- ---	---- ---	2096 899
1-04-7	SPACER, Base, Mtg., SY1		1	---- ---	---- ---	1971 162
1-04-8	SCREW, Scanner Mtg., SY1		1	---- ---	---- ---	892 569
1-04-12	AMPLIFIER, SY1		1	---- ---	---- ---	2257 182
1-04-18	ADAPTER, Amplifier, SY1		3	---- ---	---- ---	2096 872
1-06-0	**WARNING LIGHT**					
1-06-1	FLASHER PACKAGE, Emergency, SC1, SC2, SC3		1	2290 413	2290 413	2097 278
	SY1	8	1	---- ---	---- ---	*2290 413
1-06-2	FLASHER UNIT, SC1, SC2, SC3		1	2290 360	2290 360	2196 300
	SY1	8	1	---- ---	---- ---	*2290 360
1-06-3	SWITCH, Emergency Flasher		1	1972 136	1972 136	1972 136
1-06-4	KNOB, Switch		1	1972 137	1972 137	1972 137
1-06-9	HOUSING, Lens and Retainer		1	2290 620	2290 620	
1-06-11	SOCKET, Emergency Flasher Indicator Lamp		1	2097 003	2097 003	
1-06-14	BRACKET, Switch Mounting	8	1	---- ---	---- ---	*2097 161
1-07-0	**LOAD LEVELER**					
1-07-1	LOAD LEVELER, Shock Absorber, SC1, SC2, SC3		2	2421 075	2403 008	2206 633
1-08-0	**TAILGATE WINDOW SCREEN**					
1-08-1	SCREEN		1	---- ---	2196 144	2196 144
1-09-0	**HAND BRAKE SIGNAL LAMP**					
1-09-1	SIGNAL LAMP PACKAGE		1	2258 679	2258 679	
1-10-0	**BACK-UP LAMP**					
1-10-1	LAMP PACKAGE, w/Std. Trans., except Sub., SV1	6	1	2290 704		
	Sub., SV1	6	1	2290 706		
	w/Auto Trans., except Sub., SV1	6	1	2290 705	---- ---	---- ---
	Sub., SV1	6	1	2290 707		
	w/Std. Trans., except Sub., SL1	6	1	2290 708		
	Sub., SL1	6	1	2290 710		
	w/Auto. Trans., except Sub., SL1	6	1	2290 709		
	Sub., SL1	6	1	2290 711		
	w/Std. Trans., except Sub., SP1, SP2		1	---- ---	2290 712	
	Sub., SP1, SP2		1	---- ---	2290 714	
	w/Auto. Trans., except Sub., SP1, SP2		1	---- ---	2290 713	
	Sub., SP1, SP2		1	---- ---	2290 715	
	Sub., SD1, SD2		1	---- ---	2290 718	
	Sub., SD1, SD2		1	---- ---	2290 719	

MyMopar.com

CODE	PART NAME AND DESCRIPTION	CYL.	PER CAR	VALIANT LANCER	PLYMOUTH DODGE	CHRYSLER IMPERIAL
1-10-0	**BACK-UP LAMP - Cont'd**					
1-10-1	LAMP PACKAGE - Cont'd					
	w/Std. Trans., except Sub., SD3, SC1, SC2 . . .	8	1	---- ---	2290 725	2290 725
	w/Auto. Trans., except Sub., SD3, SC1, SC2 . .	8	1	---- ---	2290 726	2290 726
	w/Std. Trans., Sub., SD3, SC1	8	1	---- ---	2290 727	2290 727
	w/Auto. Trans., Sub., SD3, SC1	8	1	---- ---	2290 728	2290 728
1-12-0	**CIGAR LIGHTER**					
	NOTE: For Components see Part Type Code 8-20-1					
1-13-0	**UNDERHOOD LIGHT**					
1-13-1	LAMP PACKAGE, SC1, SC2, SC3		1	2258 910	2258 910	2258 910
1-13-9	SOCKET and BRACKET		1	2096 857	2096 857	
1-13-10	SWITCH, SC1, SC2, SC3		1	1972 426	1972 426	1972 426
1-13-13	SOCKET, SC1, SC2, SC3		1	1842 340	1842 340	1842 340
1-14-0	**MAP AND COURTESY LIGHT**					
1-14-40	LAMP PACKAGE, Courtesy		1	2258 787	2258 787	
1-21-0	**CLOCK**					
1-21-1	CLOCK PACKAGE, SP1, SP2		1	---- ---	2258 463	
	SD1, SD2		1	---- ---	2258 826	
	SY1		1	---- ---	---- ---	2197 287
1-30-0	**TRUNK COMPARTMENT LAMP**					
1-30-3	SWITCH, SC1, SC2, SC3		1	1972 426	1972 426	1972 426
1-32-0	**VISOR**					
1-32-2	VISOR, White, SP1, SP2, SD1, SD2		2	*2298 648	*2273 455	
	White, SD3, SC1, SC2, SC3, except Cv. Cp. . . .		2	---- ---	2212 272	2212 272
	White, SD3, SC1, SC3 Cv. Cp.		2	---- ---	2212 685	2212 685
1-39-0	**FUEL TANK LOCKING CAP**					
1-39-2	CAP		1	2073 990		
	Except Sub., SP1, SP2, SD1, SD2		1	---- ---	2074 050	
	Sub.		1	---- ---	2073 990	
	Except Sub., SD3		1	---- ---	1948 754	1948 754
	Sub., SD3		1	---- ---	2123 643	2123 643
1-42-0	**POWER BRAKE**					
1-42-1	BRAKE PACKAGE, Power, Midland-Ross,					
	SP1, SP2, SD1, SD2		1	2279 993	2298 968	
	SD3, SC1, SC2		1	---- ---	2279 999	2279 999
1-45-0	**FENDER SKIRT**					
1-45-1	SKIRT PACKAGE, Prime, SP1, SP2, SD1, SD2,					
	except Sub.		1	---- ---	2421 245	
	Stainless Steel, SP1, SP2, SD1, SD2, except Sub.		1	---- ---	2421 244	

★ Indicates use as required. Numerals in parentheses ( ) refer to notes. Printed in U.S.A.
⊟ Indicates parts not listed in any previous parts book. Prices and specifications subject to change without notice.
March 8, 1963 Supersedes May 1, 1962. * Indicates change or addition.

MyMopar.com

CODE	PART NAME AND DESCRIPTION	CYL.	PER CAR	VALIANT LANCER	PLYMOUTH DODGE	CHRYSLER IMPERIAL

1-48-0 HOT WATER HEATER AND COMPONENT PARTS

NOTE: Quantity is (1) Per Car unless otherwise indicated.

Model 719, 720, 750 Fresh Air Heater.
Model 721 Recirculating Heater.

CODE	PART NAME		MODEL 719	MODEL 720	MODEL 750	RECIRCULATING
1-48-1	HEATER PACKAGE, w/CONTROLS,					
	SV1, SL1		---- ---	---- ---	---- ---	2076 666
	SP1, SP2		---- ---	2277 446	---- ---	2277 691
	SD1, SD2		---- ---	2277 447	---- ---	2277 691
	SC1, SC2, SC3		---- ---	---- ---	2277 448	
	SD3		---- ---	---- ---	2219 292	
1-48-4	HEATER CONTROLS, SY1		---- ---	---- ---	2290 316	
	PLATE, Vacuum SWITCH and Push Button EXTENSION, SC1, SC2, SC3		---- ---	---- ---	2290 193	
	Fresh Air, SC1, SC2, SC3		---- ---	---- ---	2290 191	
1-48-7	TUBES and CONNECTOR, Heater Control		2209 323	2290 269	2257 197	
	Fresh Air Door		---- ---	2290 268	2257 195	
1-48-8	TUBE, Vacuum Feed		1971 676			
1-48-10	LAMP, Heater Control SP1, SP2, SY1		---- ---	*2258 168	*2197 832	
1-48-11	BEZEL and STUDS, Heater Control, SC1, SC2, SC3		---- ---	---- ---	2084 054	
	Fresh Air Control, SC1, SC2, SC3		---- ---	---- ---	2084 055	
1-48-12	BUTTON, Heater Control Push					
	SL1	Off	2258 470			
		Def.	2258 471			
		Hi	2258 472			
		Lo	2258 473			
	SV1	Off	2291 006			
		Def.	2291 007			
		Hi	2291 008			
		Lo	2291 009			
	SP1, SP2	Off	---- ---	2258 171		
		Heat	---- ---	2258 172		
		Def.	---- ---	2258 173		
		Cool	---- ---	2258 174		
	SD1, SD2	Off	---- ---	2258 348		
		Heat	---- ---	2258 349		
		Def.	---- ---	2258 350		
		Cool	---- ---	2258 351		
	SD3	Off	---- ---	---- ---	2197 468	
		Lo	---- ---	---- ---	2197 469	
		Hi	---- ---	---- ---	2197 470	
		Def.	---- ---	---- ---	2197 471	
		Air	---- ---	---- ---	2197 472	
	SC1, SC2, SC3	Off	---- ---	---- ---	1887 667	
		Lo	---- ---	---- ---	1887 668	
		Hi	---- ---	---- ---	1887 669	
		Def.	---- ---	---- ---	1887 670	
		Air	---- ---	---- ---	1887 671	

MyMopar.com

1-48-0 HOT WATER HEATER AND COMPONENT PARTS - Cont'd

NOTE: Quantity is (1) Per Car unless otherwise indicated.

Model 719, 720, 750 Fresh Air Heater.
Model 721 Recirculating Heater.

CODE	PART NAME	MODEL 719	MODEL 720	MODEL 750	RECIRCU-LATING
1-48-12	BUTTON - Cont'd				
	SY1 . . . . . Off	---- ---	---- ---	2197 846	
	Lo	---- ---	---- ---	2197 847	
	Hi	---- ---	---- ---	2197 848	
	Def.	---- ---	---- ---	2197 849	
	Air	---- ---	---- ---	2197 850	
1-48-24	PLUG, Temperature Control Valve Tube .	---- ---	1622 064	1622 064	
1-48-26	PAD, Push Button Cover, SD1, SD2, SC1, SC2, SC3	---- ---	*2258 346	*2080 388	
1-48-46	WHEEL, Blower Motor, SD3	2076 117	---- ---	1689 692	
	Fan, SV1, SL1	---- ---	---- ---	---- ---	2219 887
	SP1, SP2, SD1, SD2	---- ---	---- ---	---- ---	2197 907
1-48-47	NUT, Motor Wheel	---- ---	---- ---	6022 149	
1-48-70	BEZEL, Heater Temperature Control Arm.	*2258 481			
	BEZEL and LAMP, Fresh Air Door Control and Indicator, SY1	---- ---	---- ---	2197 664	
	BEZEL, Blower Switch	---- ---	2256 616		
1-48-88	CORE, Heater SV1, SL1, SD3	2076 400	---- ---	1885 826	2219 888
	SP1, SP2, SD1, SD2	---- ---	2277 023	1885 826	2277 577
	SCREW (6)	---- ---	6023 262		
1-48-90	SEAL, Heater Core Tube	1604 116	1604 116	1604 116	
	Housing to Core, SY1	---- ---	---- ---	1972 028	
1-48-106	RIVET, Heater to Housing Mounting	---- ---	---- ---	1879 960	
1-48-125	HOUSING, Heater Engine Side, SV1, SL1 . .	2219 392			
		---- ---	---- ---	2097 746	
1-48-126	GASKET, Heater Housing to Dash, SV1, SL1	2076 322			
	SD3, SC1, SC2, SC3	---- ---	---- ---	1880 472	
	SEAL, Distribution Duct to Dash SV1, SL1.	2076 389			
1-48-137	DEFOGGER PACKAGE, Rear Window, SD1, SD2	2277 503	2277 504		
	SY1	---- ---	---- ---	2277 635	
	SD3, SC1, SC2, SC3	---- ---	2277 505	2277 505	
1-48-144	NOZZLE, Defroster, SV1, SL1, Right . . .	2076 129	---- ---	---- ---	2076 129
	Left	2076 130	---- ---	---- ---	2076 130
	w/Mounting BRACKET, SD3, SC1, SC2, SC3				
	Right	---- ---	---- ---	1971 836	
	Left	---- ---	--------	1971 693	
1-48-145	GROMMET, Blower Mounting, SP1, SP2, SD1, SD2	---- ---	*2277 424		
1-48-151	TUBE, Rear Window Defogger	2096 989	2096 989	2096 989	
	Right, SP1, SP2, SD1, SD2	---- ---	---- ---	---- ---	2277 640
	Left	---- ---	---- ---	---- ---	2277 641

MyMopar.com

1-48-0 HOT WATER HEATER AND COMPONENT PARTS - Cont'd

NOTE: Quantity is (1) Per Car unless otherwise indicated.

Model 719, 720, 750 Fresh Air Heater.
Model 724 Recirculating Heater.

CODE	PART NAME	MODEL 719	MODEL 720	MODEL 750	RECIRCU-LATING
1-48-151	TUBE, Windshield Defroster, (2)	2096 989	2096 989	2096 989	
	Right, SL1, SV1	---- ---	---- ---	---- ---	2219 890
	Left, SL1, SV1	---- ---	---- ---	---- ---	2219 889
	Right, SP1, SP2, SD1, SD2	---- ---	---- ---	---- ---	2277 692
	Left, SP1, SP2, SD1, SD2	---- ---	---- ---	---- ---	2277 693
1-48-158	GRILLE and GASKET, Rear Window Defogger Outlet, SD3	---- ---	---- ---	1971 043	
	SC1, SC2, SC3, SY1	*2219 627	*2219 627	*2219 627	
	GRILLE, Rear Window Defogger Inlet	1971 091	1971 091	*1971 091	
	GRILLE, Windshield Defroster Outlet	---- ---	2277 477		
1-48-159	BEZEL, Rear Window Defogger Inlet Grille	1819 014	1819 014	1819 014	
1-48-162	DUCT and SEAL, Rear Window Defogger, SD3, SC1, SC2, SC3	2277 458	2277 455	2277 459	
	SY1	---- ---	---- ---	2277 460	
1-48-164	WIRING, Defogger	2076 423	2076 423	2076 423	
1-48-175	CONTROL, Heater Defroster, SP1, SP2, SD1, SD2	---- ---	---- ---	---- ---	*2426 935
1-48-191	KNOB, Rear Window Defogger Switch, SP1, SP2, SC1, SC2, SC3	1887 591	1887 591	2257 955	
	SD1, SD2, SY1	---- ---	2256 626	1887 935	
	SD3	---- ---	---- ---	2257 478	
	DUMMY KNOB, use with 1972 469 Adapter, SC1, SC2, SC3	---- ---	---- ---	2257 955	
	DUMMY KNOB, use with 274 752 Nut, SC1, SC2, SC3	---- ---	---- ---	2291 577	
1-48-192	BEZEL, Rear Window Defogger Switch, SP1, SP2	2256 616	1972 898		
	SD1, SD2, SY1	---- ---	2256 616	2197 389	
	SD3	---- ---	---- ---	2197 499	
1-48-194	ADAPTER, Dummy Knob, SC1, SC2, SC3	---- ---	---- ---	1972 469	
	SY1	---- ---	---- ---	2198 805	
1-48-203	NUT, Rear Window Defogger Switch Mounting, SD1, SD2, SC1, SC2, SC3	---- ---	1971 521	1971 521	
1-48-225	WHEEL, Rear Window Defogger Blower	1239 241	1239 241	1239 241	
1-48-227	PLATE, Rear Window Defogger Blower Mounting	1887 582	1887 582	1887 582	
1-48-236	ADAPTER, Heater Defogger Air Outlet, SY1	---- ---	---- ---	2219 066	
1-48-254	RETAINER, Heater Distribution Duct Damper to Vacuum Actuator Link, SP1, SP2, SD1, SD2	2076 405	2197 678	2076 405	
	SD3	---- ---	---- ---	2076 405	
1-48-258	ACTUATOR, Vacuum (★)	2219 980	2277 028	2277 091	
	Distribution Duct Shut-Off	---- ---	---- ---	2219 981	
	Distribution Duct Defogger	---- ---	---- ---	2219 982	

★ Indicates use as required. Numerals in parentheses ( ) refer to notes. Printed in U.S.A.
⊟ Indicates parts not listed in any previous parts book. Prices and specifications subject to change without notice.
* Indicates change or addition.

March 8, 1963 Supersedes May 1, 1962.

MyMopar.com

1-48-0 HOT WATER HEATER AND COMPONENT PARTS - Cont'd

NOTE: Quantity is (1) Per Car unless otherwise indicated.

Model 719, 720, 750 Fresh Air Heater.
Model 724 Recirculating Heater.

CODE	PART NAME	MODEL 719	MODEL 720	MODEL 750	RECIRCU-LATING
1-48-264	HOUSING, Rear Window Defogger Blower	1819 470	1819 470	1819 470	
	Rear Window Defogger Switch, SC1, SC2, SC3	---- ---	---- ---	1972 146	
1-48-267	CLIP, Vacuum Actuator Shaft, Fresh Air Door	---- ---	---- ---	6008 144	
	Fresh Air Door	---- ---	---- ---	6008 145	
	Shut-Off	---- ---	---- ---	6015 216	
	Defroster	---- ---	---- ---	6015 216	
1-48-268	MOTOR and BRACKET, Rear Window Defogger Blower	2096 772	2096 772	2096 772	
1-48-280	CONNECTOR, Heater Defroster Tube (2)	---- ---	2277 085		
1-48-300	SWITCH, Rear Window Defogger	1972 772	1972 772		
	SC1, SC2, SC3	---- ---	---- ---	1972 774	
	SY1	---- ---	---- ---	2197 410	
	SD3	---- ---	---- ---	*2096 376	
	SD3, PACKAGE	---- ---	---- ---	*2197 443	
1-48-309	NUT, Rear Window Defogger Switch Mounting, SP1, SP2	1887 603	1887 603		
	SD1, SD2, SC1, SC2, SC3	---- ---	1971 521	1971 521	
	SD3	---- ---	---- ---	1972 548	
1-48-313	NAME PLATE, Rear Window Defogger Switch, SY1	---- ---	---- ---	2197 509	
1-48-328	DUCT, Fresh Air Intake	---- ---	2277 342		
1-48-356	SHAFT and LINK, Fresh Air Door	---- ---	2162 525		
1-48-357	RETAINER, Fresh Air Door Shaft	---- ---	2162 360		
1-48-362	SEAL, Cowl Plenum Chamber Fresh Air Opening Housing	2162 564			
	Fresh Air Door Housing to Dash	---- ---	2162 245		
1-48-365	DOOR, Cowl Plenum Chamber Fresh Air	2195 951	2162 418		
	DOOR and FRAME, Fresh Air, SD3, SY1	---- ---	---- ---	1830 633	
	DOOR and LINK, SD3, SC1, SC2, SC3	---- ---	---- ---	1830 632	
1-48-366	GASKET, Heater Control Face Plate	2076 217			
1-48-370	PIN, Cowl Plenum Chamber Fresh Air Door to Bowden Cable	6022 808			
	To Housing Hinge	6022 809			
1-48-374	CONTROL, Cowl Plenum Chamber Fresh Air Door, LHD. (2)	2243 357			
1-48-379	DEFLECTOR, Heater Air, SP1, SP2, SD1, SD2	---- ---	*2277 061		
	SD3, SC1, SC2, SC3, SY1	---- ---	---- ---	*2197 768	

MyMopar.com

1-48-0 HOT WATER HEATER AND COMPONENT PARTS - Cont'd

NOTE: Quantity is (1) Per Car unless otherwise indicated.

Model 719, 720, 750 Fresh Air Heater.
Model 721 Recirculating Heater.

CODE	PART NAME	MODEL 719	MODEL 720	MODEL 750	RECIRCU-LATING
1-48-383	HOUSING, Cowl Plenum Chamber Fresh Air Door, Right	2259 330			
	Left	2243 293			
	Fresh Air Opening	*2259 112			
	Fresh Air Door	---- ---	2162 239		
1-48-388	NUT, Fresh Air Door Linkage Adjusting	---- ---	---- ---	6022 274	
1-48-389	BOLT, Fresh Air Door Linkage, Mounting	---- ---	---- ---	1839 345	
1-48-391	BRACKET, Fresh Air Door Vacuum Actuator, Mounting	---- ---	2277 559	1885 836	
	Dash Panel Fresh Air Door Actuating Mounting, w/o Air Conditioning	---- ---	---- ---	1960 716	
1-48-393	LEVERS and LINK, Heater and Vent Deflector	---- ---	2277 068		
1-48-394	WASHER, Fresh Air Door Linkage Spring	---- ---	---- ---	1152 315	
1-48-399	COVER, Cowl Plenum Chamber Front Panel Heater Opening	2082 294			
1-48-555	HOSE, Heater, 50' Roll, as req'd.	1315 466	1315 466	1315 466	
	Heater Valve to Core, SD3	---- ---	---- ---	1595 160	
	Core to Pump, SP2, SD2, w/413 cu. in. Engine	---- ---	*2197 011	*2096 932	
	SP1, SP2, SD1, SD2, SL1, SV1	---- ---	2096 932	---- ---	2197 902
	Engine to Core, SP2, SD2, w/413 cu. in. Engine	---- ---	*2197 011		
1-48-559	CLIP, Fresh Air Door Vacuum Tube	---- ---	1302 783		
1-48-572	NIPPLE, Heater Hose, Inlet	1971 061	1971 061	1971 061	
	Outlet	1971 061	1971 061	1971 061	
	Return	---- ---	---- ---	---- ---	1971 061
	w/High Performance, Return	---- ---	1779 257	1779 257	
1-48-599	MOTOR, Blower, SL1, SV1	2084 848	---- ---	2084 862	2219 886
	SP1, SP2, SD1, SD2	---- ---	---- ---	---- ---	2277 639
	w/Mounting PLATE	---- ---	2277 419		
	NUT, Mounting	---- ---	6023 195		
1-48-600	CLIP, Axial Blower Rotor, Balancing	---- ---	2277 247		
		---- ---	2277 248		
		---- ---	2277 249		
		---- ---	2277 670		
		---- ---	2277 671		
		---- ---	2277 672		
	Retaining	---- ---	2277 263		
1-48-602	STATOR, Heater Axial Blower	---- ---	2219 102		
1-48-603	ROTOR, Axial Blower	---- ---	2219 103		
1-48-608	GASKET, Blower Motor Mounting Plate to Duct	2076 352			
	Blower Motor Mounting	2076 088			
1-48-611	PLATE, Blower Motor and Vacuum Actuator, Mounting	2076 354	*2277 345		

MyMopar.com

1-48-0 HOT WATER HEATER AND COMPONENT PARTS - Cont'd

NOTE: Quantity is (1) Per Car unless otherwise indicated.

Model 719, 720, 750 Fresh Air Heater.
Model 721 Recirculating Heater.

CODE	PART NAME	MODEL 719	MODEL 720	MODEL 750	RECIRCU-LATING
1-48-613	SCREW, Blower Motor to Stator (4)	---- ---	6023 146		
	Blower Mounting	---- ---	6024 003		
1-48-683	BRACKET, Blower Motor Mounting	---- ---	---- ---	1880 211	
1-48-684	GROMMET, Blower Motor Mounting Bracket	---- ---	---- ---	1879 827	
1-48-688	SPACER, Blower Motor Bracket	---- ---	*2277 873	1605 271	
1-48-707	DUCT, Distribution, SD1, SD2	2076 140	---- ---		
	SD3, SC1, SC2, SC3	---- ---	---- ---	*2277 754	
1-48-709	CLIP, Vacuum Actuator Retaining, Right	6015 254			
	Left	6015 255			
	Vacuum Actuator Shaft to Lever, Retaining	----- ---	6008 144	6008 145	
1-48-712	LEVER, Heater Damper, (2)	---- ---	1819 697	1819 689	
1-48-715	SPACER, Distribution Duct to Dash	2277 652			
	(as req'd)	1704 198			
1-48-722	NUT, Defroster Damper Shaft, SD3, SC1, SC2, SC3, SY1	---- ---	---- ---	1829 825	
1-48-770	SWITCH, Fresh Air Heater Control Push Button	2290 089	2256 681	2290 089	2197 904
	Blower Motor, 3 Speed	---- ---	2256 590		
1-48-771	PLATE, Heater Control Vacuum Switch, Mounting	2258 468			
1-48-774	DECAL, Heater Blower Switch, SP1, SP2	---- ---	2258 264		
	SD1, SD2	---- ---	2258 626		
1-48-779	NUT, Heater Blower Switch, SP1, SP2	1439 758	1339 711		
1-48-780	BRACKET, Blower Switch Mounting	---- ---	2290 061		
1-48-801	KNOB, Heater Blower Switch, SP1, SP2	---- ---	2256 479	---- ---	1887 591
	SL1, SV1, SD1, SD2	---- ---	2256 483	---- ---	1887 591
1-48-832	RESISTOR, Heater Blower Motor	---- ---	2277 016		
1-48-839	CLAMP, Cowl Plenum Chamber Fresh Air Door Housing to Bowden	2259 329			
1-48-854	VALVE, Temperature Control	2219 280	2275 592	---- ---	2219 891
	VALVE and GASKET, SD3, SC1, SC2, SC3	---- ---	---- ---	2084 461	
	SY1	---- ---	---- ---	2084 460	
1-48-855	SEAL, Temperature Control Valve	1604 116	2277 026		
1-48-858	GASKET, Temperature Control Valve Mounting	---- ---	2277 025		
1-48-867	PLATE and GASKET, Control Valve Mounting	2076 327			

★ Indicates use as required. Numerals in parentheses ( ) refer to notes. Printed in U.S.A.
⊟ Indicates parts not listed in any previous parts book. Prices and specifications subject to change without notice.
March 8, 1963 Supersedes May 1, 1962. * Indicates change or addition.

MyMopar.com

1-48-0 HOT WATER HEATER AND COMPONENT PARTS - Cont'd

NOTE: Quantity is (1) Per Car unless otherwise indicated.

Model 719, 720, 750 Fresh Air Heater.
Model 721 Recirculating Heater.

CODE	PART NAME	MODEL 719	MODEL 720	MODEL 750	RECIRCU-LATING
1-48-886	BRACKET, Lamp Socket, SC1, SC2, SC3 . .	---- ---	---- ---	2197 001	
1-48-940	ARM, Temperature Control, w/PLATE, SP1, SP2	*2258 474	*2258 161		
	SD1, SD2	---- ---	*2258 342		
	SD3	---- ---	---- ---	*2197 461	
	SC1, SC2, SC3	---- ---	---- ---	*2097 097	
1-48-941	CABLE and HOUSING, Temperature Control	2290 354	2290 352	1819 748	
	CLIP	*6015 143	*6015 143	*6015 143	
1-48-942	KNOB and CLIP, Temperature Control . . .	2258 479			
	KNOB and SCREW, SP1, SP2	---- ---	2258 166		
	SD1, SD2	---- ---	2258 359		
	SD3	---- ---	---- ---	*2197 622	
	SC1, SC2, SC3	---- ---	---- ---	1887 426	
	SY1	---- ---	---- ---	2197 836	

CODE	PART NAME AND DESCRIPTION	CYL.	PER CAR	VALIANT LANCER	PLYMOUTH DODGE	CHRYSLER IMPERIAL
1-50-0	**WINDOW SAFETY SWITCH**					
1-50-1	SWITCH PACKAGE, Electric Window Lift		1	---- ---	2197 405	2197 405
1-67-0	**SEAT BELT**					
1-67-1	BELT PACKAGE, Seat, SC2, Single, Front		★	---- ---	---- ---	*2421 446
	SC2, Single, Rear		★	---- ---	---- ---	2421 447
1-67-2	HARDWARE PACKAGE, Mounting		★	⊟2299 972	⊟2299 972	⊟2299 972
1-67-3	REINFORCEMENT, to Floor		★	2252 151	2252 151	2252 151
	w/Weld NUT		★	⊟2424 563	⊟2424 563	⊟2424 563
1-67-5	PLUG, Anchor Hole Seal		★	2252 155	2252 155	2252 155
	GROMMET, Front Seat, SD3, except SY1	8	2	---- ---	2161 510	2161 510
1-67-6	STUD, Front Seat Belt Eye		2	⊟2428 046	⊟2428 046	⊟2428 046
1-67-8	NUT, Front Seat Belt Eye Stud		2	⊟6023 777	⊟6023 777	⊟6023 777
1-67-9	WASHER, to Floor		2	⊟2299 534	⊟2299 534	⊟2299 534
1-72-0	**CHILD GUARD REAR DOOR SAFETY LOCK**					
1-72-5	LOCK PACKAGE, SP1, SP2, SD1, SD2		1	2240 572	2298 597	
	SD3, SC1, SC2, SC3, SY1		1	---- ---	2240 572	2240 572
1-74-0	**ROOF LUGGAGE RACK.**					
1-74-1	RACK PACKAGE, Sub., SP1, SP2, SD1, SD2 . . .		1	2243 544	2243 544	
	SD3, SC1, SC3		1	---- ---	2196 250	2196 250

★ Indicates use as required. Numerals in parentheses ( ) refer to notes. Printed in U.S.A.
⊟ Indicates parts not listed in any previous parts book. Prices and specifications subject to change without notice.
* Indicates change or addition. March 8, 1963 Supersedes May 1, 1962.

MyMopar.com

CODE	PART NAME AND DESCRIPTION	CYL.	PER CAR	VALIANT LANCER	PLYMOUTH DODGE	CHRYSLER IMPERIAL
1-76-0	**MIRROR**					
1-76-1	MIRROR PACKAGE, Outside Rear View, Manual		★	2299 574	2299 574	
	Left, SC1, SC2, SC3		1	---- ---	---- ---	2275 020
	Right, SC1, SC2, SC3		1	---- ---	---- ---	2275 015
	Right, SD3, SY1	8	1	---- ---	2275 015	2275 015
	Left, SY1	8	1	---- ---	---- ---	2275 020
	REMOTE CONTROL and MIRROR PACKAGE, Outside Rear View, SC1, SC2, SC3		1	---- ---	2275 937	2275 937
	MIRROR PACKAGE, SC1, SC3		1	---- ---	2162 414	2162 414
1-76-2	MIRROR, Vanity		1	---- ---	---- ---	1839 845
1-76-3	MIRROR PACKAGE, Inside Rear View, Prismatic, SP1, SP2, SD1, SD2		1	*2299 846	*2299 846	
	SD3, SC1, SC2, SC3	8	1	---- ---	*2421 208	*2421 208
1-82-0	**WINDSHIELD WASHER**					
1-82-2	WINDSHIELD WASHER PACKAGE, SP1, SP2, SD1, SD2, SC1, SC2		1	2258 839	2290 045	2257 692
	SD3		1	---- ---	2257 692	
1-82-4	RESERVOIR, SP1, SP2, SD1, SD2		1	2076 216	2076 216	
	SD3		1	---- ---	2198 448	2198 448
1-82-6	NOZZLE, w/BRACKET		2	2209 339		
	w/CLIP, Right, SP1, SP2, SD1, SD2		1	---- ---	2258 929	
	Left, SP1, SP2, SD1, SD2		1	---- ---	2258 926	
	NOZZLE, SD3, SC1, SC2, SC3		2	---- ---	---- ---	2198 211
	NOZZLE, w/BASE, SY1		2	---- ---	---- ---	1887 319
	NOZZLE, SY1		2	---- ---	---- ---	1887 321
1-82-8	CONNECTOR, Hose		1	---- ---	2258 912	
	TEE, Hose, SD3		1	1523 160	1523 160	1523 160
1-82-9	CLIP, Nozzle Mtg., SD3, SC1, SC2, SC3		2	---- ---	---- ---	2198 210
1-82-14	SWITCH, Single Speed		1	---- ---	2290 629	
	Variable Speed, SP1, SP2, SD1, SD2		1	---- ---	2290 628	
	SD3		1	---- ---	2198 323	2198 323
1-82-15	SCREW, Switch Mtg.		2	---- ---	1819 251	
1-82-21	BRACKET, Reservoir Mtg., SP1, SP2, SD1, SD2		1	*2258 779	*2258 779	
	SD3		1		*2198 450	*2198 450
1-82-22	CAP, Reservoir		1	1838 001	1838 001	
	w/o Hole in Top		1	2198 454	2198 454	2198 454
1-82-25	PUMP, Foot Control, SC1, SC2		1	*2076 175	*2258 782	*2197 423
	SD3	8	1	---- ---	*2197 423	
	Push Button Type, Electric		1	2258 119	2258 119	2258 119
	Foot Control, w/VALVE, SC1, SC2		1	⊟2427 462	⊟2427 462	⊟2427 462
1-82-27	WIRING, Switch Feed, SP1, SP2		1	---- ---	2290 348	
	SD1, SD2		1	---- ---	2290 349	
1-82-29	GROMMET, Check Valve to Foot Pump		1	1971 739		
	CIRCUIT BREAKER, w/TERMINAL, Pump		1	2290 102	2 0 102	2290 102
1-82-30	STRAINER		1	1571 028	1571 028	
1-82-38	VALVE, Check		1	1880 222	1880 222	
1-82-39	BRACKET, Check Valve		1	---- ---	2258 780	
1-82-43	BUTTON, w/CLIP, Switch, SD3		1	---- ---	1972 581	1972 512

★ Indicates use as required. Numerals in parentheses ( ) refer to notes. Printed in U.S.A.
⊟ Indicates parts not listed in any previous parts book. Prices and specifications subject to change without notice.
March 8, 1963 Supersedes May 1, 1962. * Indicates change or addition.

MyMopar.com

CODE	PART NAME AND DESCRIPTION	CYL.	PER CAR	VALIANT LANCER	PLYMOUTH DODGE	CHRYSLER IMPERIAL
1-82-0	**WINDSHIELD WASHER - Cont'd**					
1-82-44	HOSE, Windshield Washer, 3/16" O.D.		★	2096 623	2096 623	2096 623
	9/32" O.D.		★	2197 650	2197 650	2197 650
	13/32" O.D.		★	2097 055	2097 055	2097 055
1-82-46	ARM, Windshield Washer Foot Pump Switch		1	---- ---	2421 196	2421 196
1-82-49	NUT, Switch Mounting		1	2257 280	2257 280	
1-87-0	**RADIO**					
1-87-2	SPEAKER and SWITCH PACKAGE, Rear Shelf		1	*2291 479	*2291 479	
	SPEAKER PACKAGE, Rear Shelf, SD1, SD2, SD3, SC1, SC2, SC3		1	---- ---	*2291 874	*2291 874
	SPEAKER, Instrument Panel, 100 Series	6	1	*2448 821		
	SP1, SP2, SD1, SD2, 200 Series		1	*2448 812	*2448 810	
	SP1, SP2, SD1, SD2, 300 Series		1	---- ---	2448 811	
	SD3, SC1, SC2, SC3		1	---- ---	*2448 812	*2448 812
	SY1		1	---- ---	---- ---	*2448 813
	SPEAKER, Rear Compartment		1	*2448 812	*2448 812	*2448 812
1-87-5	SWITCH, Foot Control	8	1	---- ---	---- ---	1819 409
1-87-6	PLUG, Control Foot Switch		1	---- ---	---- ---	2086 634
1-87-8	ADAPTER, Instrument Panel Mounting, SC1, SC2, SC3		1	---- ---	---- ---	1971 057
1-87-12	BRACKET, Radio Mounting	6	1	2076 718		
1-87-17	NUT, Radio Speaker Guide and Medallion, SV1	6	2	1839 995		
1-87-21	GRILLE, Rear Shelf Speaker, except SY1		1	1971 091	1971 091	1971 091
1-87-22	BEZEL, Grille, except SY1		1	1819 014	1819 014	1819 014
1-87-30	PLATE, Instrument Panel Speaker Mounting	6	1	*2076 252		
1-87-180	KNOB, Control, Rear Speaker		★	*1971 644	*1971 644	
1-87-289	SWITCH, Rear Shelf Radio Speaker Fader		1	1819 889	1819 889	
1-87-292	NAME PLATE, Rear Speaker Switch		1	*1972 405	*1972 405	
1-87-335	STUD, Instrument Panel Radio Speaker Mtg., SD3		4	---- ---	*2097 570	
1-87-336	NUT, Speaker Mtg., SC1, SC2, SC3	8	4	---- ---	---- ---	*1972 025
1-87-404	CABLE, Rear Speaker Wiring		1	*1627 125	*1627 125	*1627 125
	WIRING Assy., Rear Speaker		1	---- ---	*1769 430	*1769 430
1-87-464	HOLDER, Feed Fuse		1	1841 698		
1-88-0	**RADIO ANTENNA**					
1-88-1	ANTENNA PACKAGE, Front 60" Manual, SP1, SP2, SD1, SD2		1	2258 888	2258 888	
	SD3, SC1, SC2, SC3		1	---- ---	2258 933	2258 933
	Motor Driven, Rear, SC1, SC2, SC3		1	---- ---	---- ---	2258 920
1-88-6	ADAPTER and GASKET, Mounting, 60" Manual		1	2258 745	2258 745	---- ---
	SC1, SC2		1	---- ---	---- ---	2258 934
	SD3, SC3		1	---- ---	2258 937	2258 937

★ Indicates use as required. Numerals in parentheses ( ) refer to notes. Printed in U.S.A.
⊟ Indicates parts not listed in any previous parts book. Prices and specifications subject to change without notice.
* Indicates change or addition. March 8, 1963 Supersedes May 1, 1962.

MyMopar.com

CODE	PART NAME AND DESCRIPTION	CYL.	PER CAR	VALIANT LANCER	PLYMOUTH DODGE	CHRYSLER IMPERIAL
1-88-0	**RADIO ANTENNA - Cont'd**					
1-88-6	ADAPTER, Mtg., 90" Manual		1	2076 250		
	ADAPTER and GASKET, Right Rear, Power, Upper SC1, SC2, SC3		1	---- ---	---- ---	2258 335
	Lower		1	---- ---	---- ---	2258 271
	ADAPTER, Antenna Mast Mounting Lower, SY1		1	---- ---	---- ---	2197 447
	Upper, SY1		1	---- ---	---- ---	2197 446
1-88-7	PIN and CONNECTOR, Power Antenna		1	---- ---	---- ---	2258 899
1-88-10	MAST, Antenna, w/LEAD, SP1, SP2, SD1, SD2		1	2258 881	2258 881	
	SD3, SC1, SC2, SC3	8	1	---- ---	2258 939	2259 939
1-88-17	GASKET, Antenna Mounting Adapter Upper	6	1	2076 251		
1-88-51	COVER, Front Fender Shield Antenna Hole, SY1		1	---- ---	---- ---	1940 860
1-88-67	LEAD, Antenna, SC1, SC2, SC3		1	---- ---	---- ---	2258 771
1-88-107	GASKET, Antenna Mtg., Adapter	6	1	2076 251		
	SY1	8	1	---- ---	---- ---	2197 448
1-88-116	KNOB, Power Antenna Switch, SY1	8	1	---- ---	---- ---	1887 935
	SC1, SC2, SC3	8	1	---- ---	---- ---	2257 955
	Dummy, SC1, SC2, SC3	8	1	---- ---	---- ---	2291 577
1-88-117	MOTOR, w/Drive	8	1	---- ---	---- ---	1972 068
1-88-118	CIRCUIT BREAKER, Power Antenna, SC1, SC2, SC3	8	1	---- ---	---- ---	1642 477
1-88-120	NUT, Cap, 1/2-24"		1	2096 052		
	5/8-24"		★	2258 831	2258 831	2258 831
	3/4-32", SC1, SC2, SC3		1	---- ---	---- ---	1972 066
	For Motorized Antenna	8	1	---- ---	---- ---	2291 415
1-88-123	NUT, Rotary Switch Mtg., SC1, SC2, SC3		1	---- ---	---- ---	*1971 521
	NUT, Toggle Switch Mounting, SC1, SC2, SC3	8	2	---- ---	---- ---	*1688 542
1-88-159	MAST, Power Antenna, SC1, SC2, SC3		1	---- ---	---- ---	1972 065
1-88-162	CABLE, Power Antenna Lead-In, SC1, SC2, SC3		1	---- ---	---- ---	2290 041
	SY1 Factory Installed		1	---- ---	---- ---	2258 771
1-88-170	COLLAR, Adapter Mtg.		1	2076 249		
	Grounding, SC1, SC2, SC3		1	---- ---	---- ---	2258 270
	Rear, SY1		1	---- ---	---- ---	2197 870
1-88-205	SWITCH, Power Antenna, SC1, SC2, SC3, Rear Mounted	8	1	---- ---	---- ---	1779 863
	SC1, SC2, SC3, Rear Mounted, Factory Installed	8	1	---- ---	---- ---	2198 879
	Front Mounted, SY1, Factory Installed	8	1	---- ---	---- ---	1779 863
	Front Mounted, SY1, Dealer Installed		1	---- ---	---- ---	2197 147
1-108-0	**SPOTLIGHT**					
1-108-1	SPOTLIGHT PACKAGE, SD3		1	*2291 571	*2291 571	*2291 571
1-108-2	BRACKET PACKAGE, Outside Mounting, Right, SP1, SP2, SD1, SD2		1	1704 802	2291 572	
	Right, SD3, SC1, SC2, SC3		1	---- ---	1818 918	1818 918
	Left, SP1, SP2, SD1, SD2		1	1704 803	2291 573	
	Left, SD3, SC1, SC2, SC3		1	---- ---	1818 917	1818 917
	Left, SY1	8	1	---- ---	---- ---	2198 727

★ Indicates use as required. Numerals in parentheses ( ) refer to notes. Printed in U.S.A.
⊟ Indicates parts not listed in any previous parts book. Prices and specifications subject to change without notice.
March 8, 1963 Supersedes May 1, 1962. * Indicates change or addition.

MyMopar.com

CODE	PART NAME AND DESCRIPTION	CYL.	PER CAR	VALIANT LANCER	PLYMOUTH DODGE	CHRYSLER IMPERIAL
1-108-0	**SPOTLIGHT - Cont'd**					
1-108-10	MEDALLION, Coronado		1	2291 575	2291 575	2291 575
	Sportsman		1	2291 576	2291 576	2291 576
1-108-17	BULB, 5" diameter		1	1661 046	1661 046	1661 046
	6" diameter		1	1662 230	1662 230	1662 230
1-108-28	SWITCH		1	1641 511	1641 511	1641 511
1-108-49	HOLDER, Fuse		1	1239 344	1239 344	1239 344
1-135-0	**DOOR EDGE PROTECTOR**					
1-135-1	PROTECTOR PACKAGE, Door Edge, 2 Door Models, SP1, SP2, SD1, SD2		1	2240 574		
	SY1		1	---- ---	---- ---	2094 926
	4 Door Models, SP1, SP2, SD1, SD2		1	2196 642	2299 373	
	SY1		1	---- ---	---- ---	2094 921

NOTES

★ Indicates use as required. Numerals in parentheses ( ) refer to notes. Printed in U.S.A.
⊟ Indicates parts not listed in any previous parts book. Prices and specifications subject to change without notice.
* Indicates change or addition. March 8, 1963 Supersedes May 1, 1962.

MyMopar.com

CODE	PART NAME AND DESCRIPTION	CYL.	PER CAR	VALIANT LANCER	PLYMOUTH DODGE	CHRYSLER IMPERIAL

NOTES

MyMopar.com

GROUP 2 - FRONT SUSPENSION

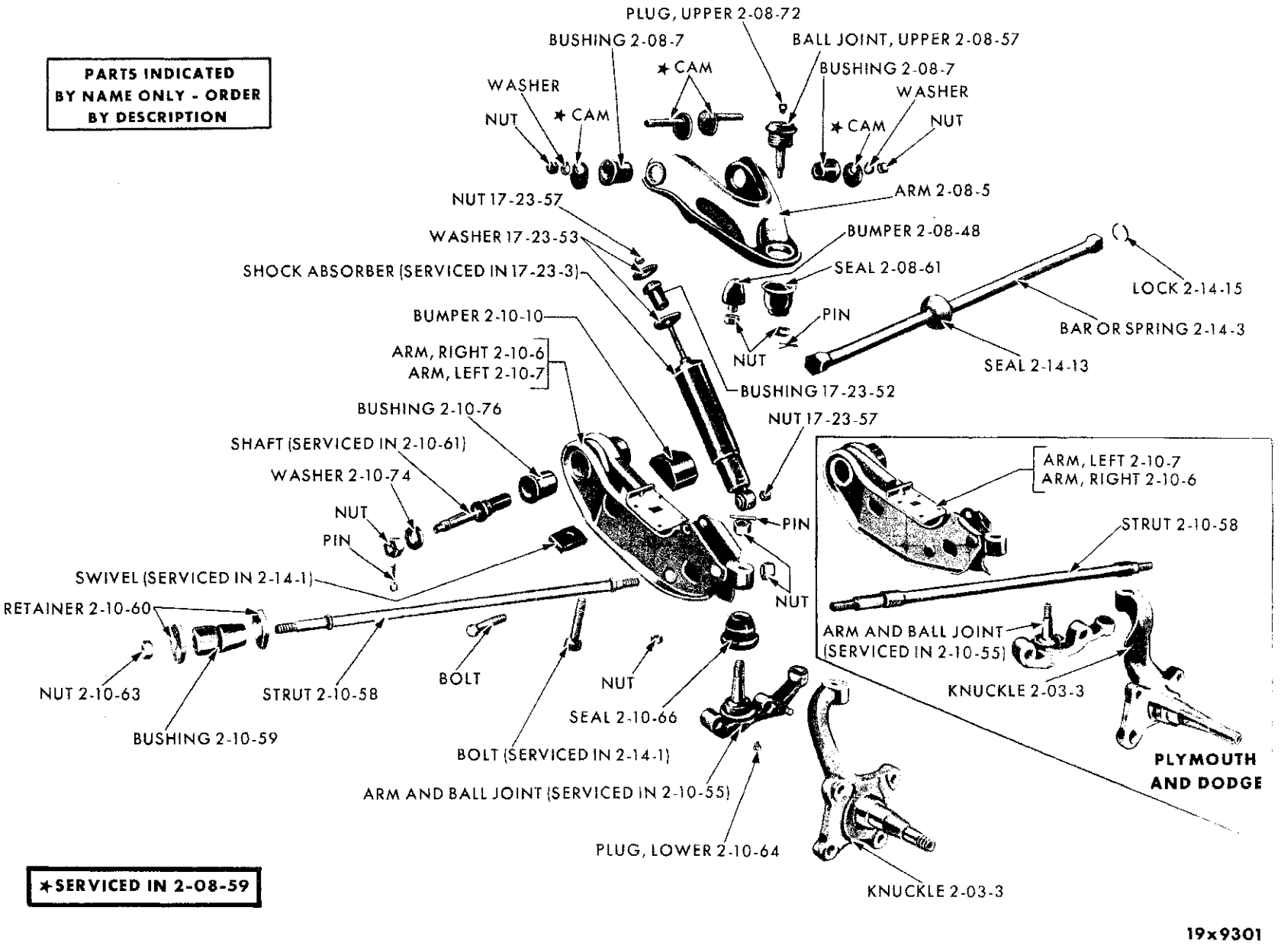

FRONT SUSPENSION - EXCEPT CHRYSLER SC1-2-3 AND IMPERIAL SY1

MyMopar.com

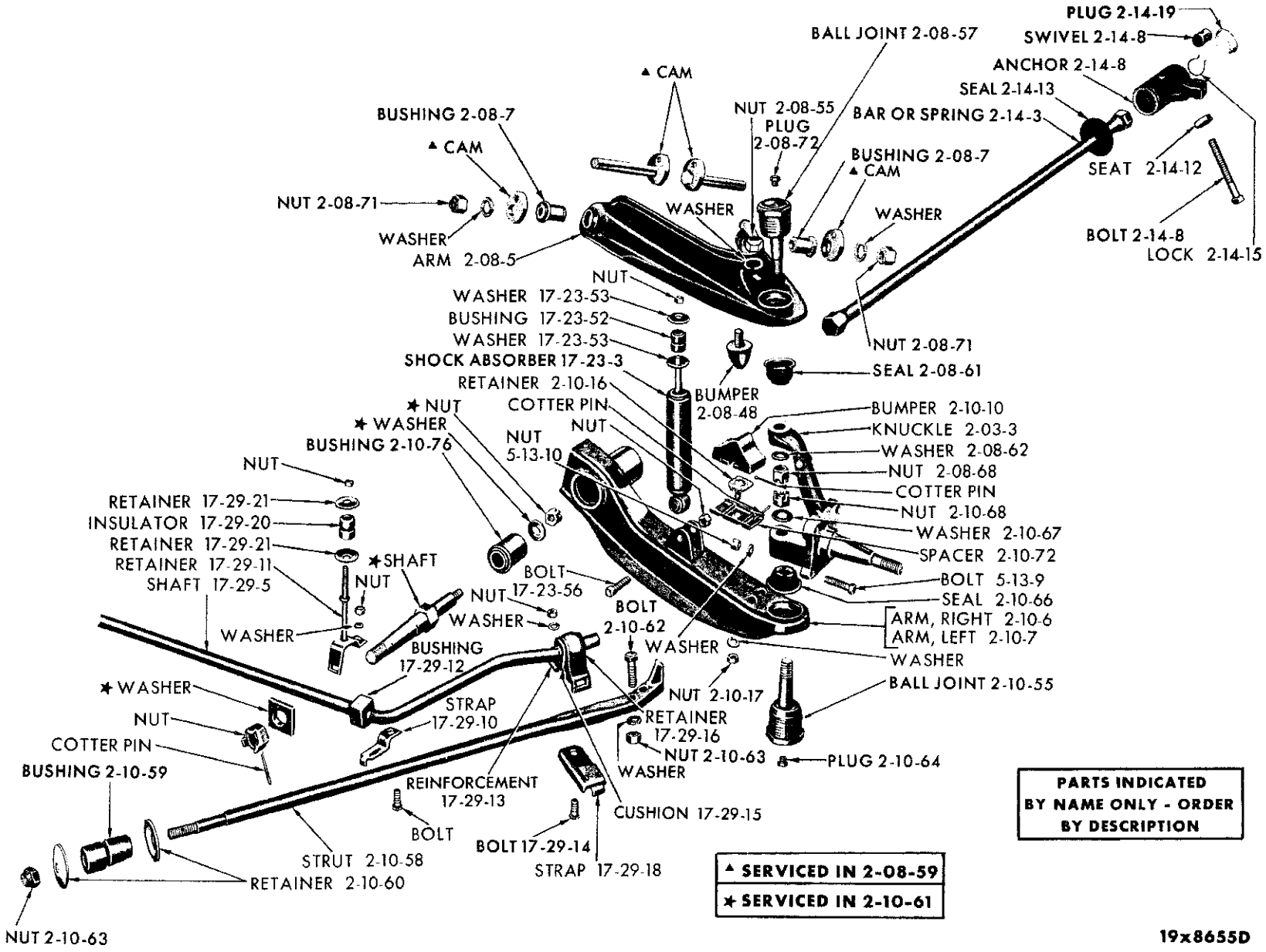

FRONT SUSPENSION - CHRYSLER SC1-2-3 AND IMPERIAL SY1

MyMopar.com

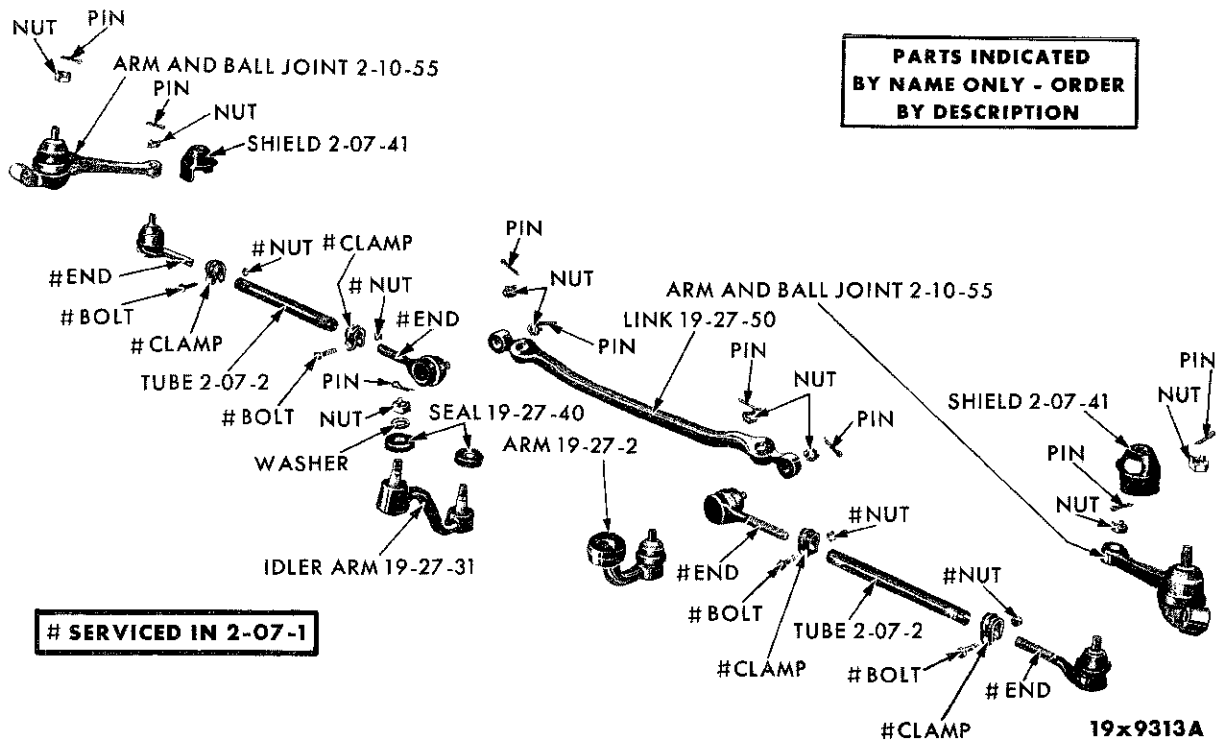

TIE RODS - VALIANT SV1 AND LANCER SL1

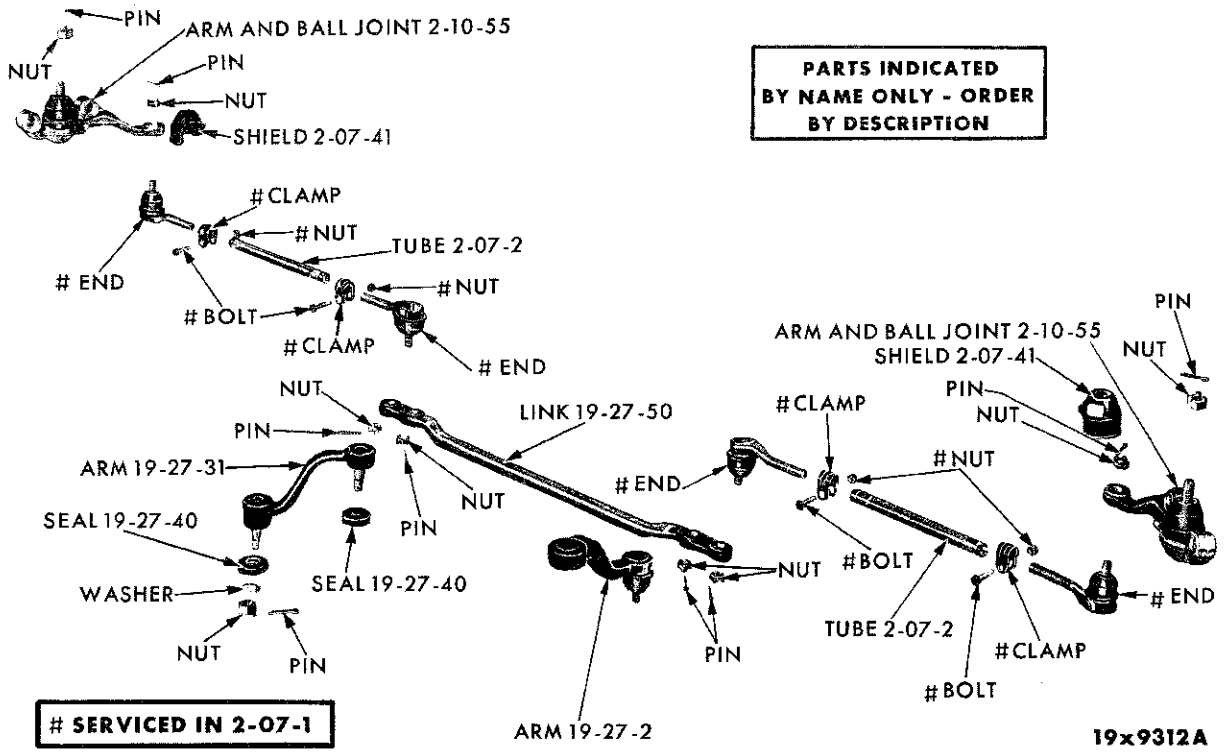

TIE RODS - PLYMOUTH SP1-2 AND DODGE SD1-2

MyMopar.com

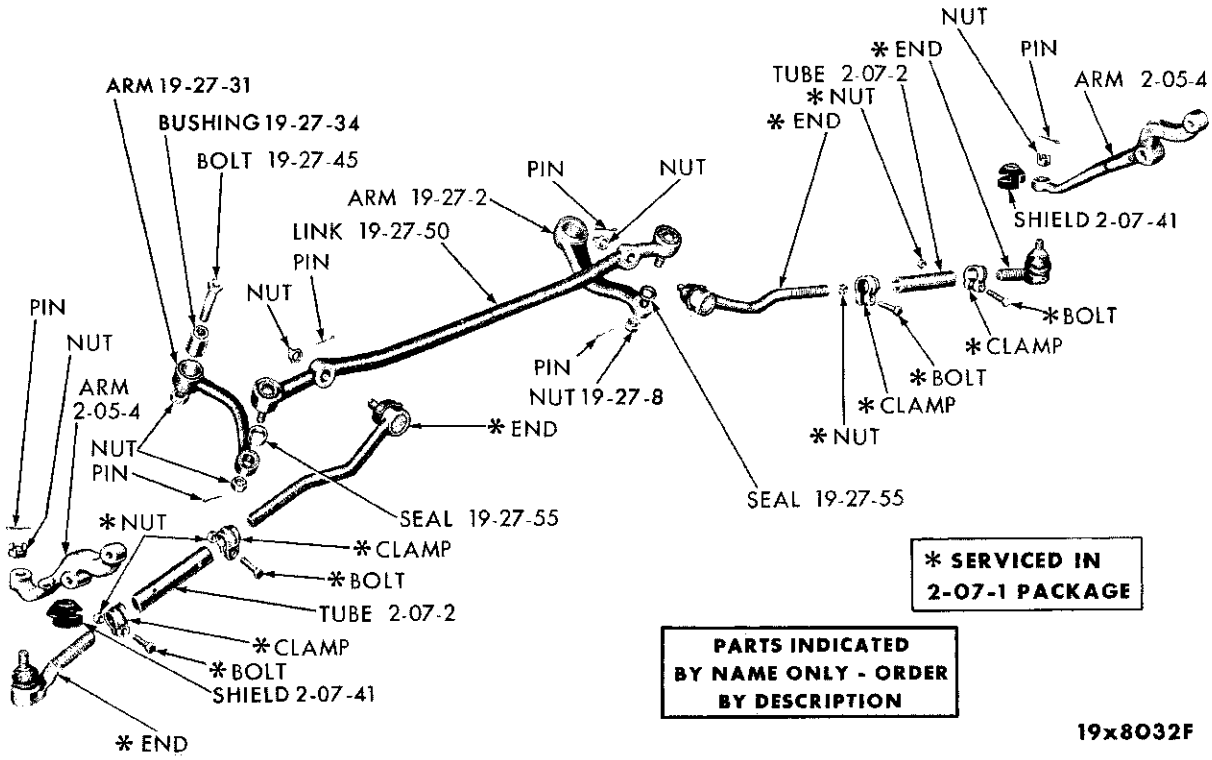

TIE RODS - CHRYSLER SC1-2-3 AND IMPERIAL SY1

NOTES

MyMopar.com

CODE	PART NAME AND DESCRIPTION	CYL.	PER CAR	VALIANT LANCER	PLYMOUTH DODGE	CHRYSLER IMPERIAL
2-03-0	**STEERING KNUCKLE**					
2-03-3	KNUCKLE, Right	6	1	2071 432		
	Left	6	1	2071 433		
	Except SD3		2	---- ---	1858 084	
	SD3, SC1, SC2	8	2	---- ---	1671 362	1671 362
	SC3	8	2	---- ---	---- ---	1670 320
	SY1	8	2	---- ---	---- ---	1671 363
2-05-0	**STEERING LINKAGE KNUCKLE ARM**					
2-05-4	ARM, Right, SD3, SC1, SC2	8	1	---- ---	1825 672	1825 672
	Left, SD3, SC1, SC2	8	1	---- ---	1825 673	1825 673
	Right, SC3	8	1	---- ---	---- ---	1825 674
	Left, SC3	8	1	---- ---	---- ---	1825 675
	Right, SY1	8	1	---- ---	---- ---	1825 676
	Left, SY1	8	1	---- ---	---- ---	1825 677
2-07-0	**STEERING KNUCKLE TIE ROD**					
2-07-1	END PACKAGE, Inner, L.H. thd., except SD3		2	⊟2448 384	⊟2448 384	
	Outer, R.H. thd., except SD3		2	⊟2448 383	⊟2448 383	
	Inner, SD3, SC1, SC2	8	2	---- ---	2279 989	2279 989
	Outer, SD3, SC1, SC2	8	2	---- ---	⊟2448 398	⊟2448 398
	Right, Inner, SC3, SY1	8	1	---- ---	---- ---	2279 990
	Left, Inner, SC3, SY1	8	1	---- ---	---- ---	2279 991
	Outer, SC3, SY1	8	2	---- ---	---- ---	2279 992
2-07-2	TUBE, except SD3		2	2072 441	2072 441	
	TUBE, w/CLAMP BOLT and NUT, SD3	8	2	---- ---	1634 619	1634 619
2-07-41	SHIELD, Steering Link Outer Tie Rod End, Right		1	1858 262	1858 262	1858 262
	Left		1	1858 263	1858 263	1858 263
2-08-0	**FRONT WHEEL UPPER CONTROL ARM**					
2-08-5	ARM, Right	6	1	2071 452		
	Left	6	1	2071 453		
	Right, except SD3		1	---- ---	1857 856	
	Left, except SD3		1	---- ---	1857 857	
	Right, SD3, SC1, SC2	8	1	---- ---	1825 306	1825 306
	Left, SD3, SC1, SC2	8	1	---- ---	1825 307	1825 307
	Right, SC3, SY1	8	1	---- ---	---- ---	1825 664
	Left, SC3, SY1	8	1	---- ---	---- ---	1825 665
2-08-7	BUSHING, Upper Control Arm, except SD3		4	2071 204	2071 204	
	SD3	8	4	---- ---	1825 317	1825 317
2-08-11	SLEEVE, Upper Control Arm Bushing, except SD3		2	---- ---	*1857 840	
	SD3, SC1, SC2	8	2	---- ---	*2207 200	*2207 200
2-08-48	BUMPER, Frame		2	1825 314	1825 314	1825 314
2-08-55	NUT, Bumper Bolt		2	6012 031	6012 031	6012 031
2-08-57	BALL JOINT PACKAGE, Upper	6	2	2298 533		
	SC1, SC2		2	---- ---	2298 534	2298 534
	SC3, SY1	8	2	---- ---	---- ---	2298 536
2-08-59	CAM and BUSHING PACKAGE, Support Bracket, except SD3		2	2084 920	2084 920	
	SD3	8	2	---- ---	1881 652	1881 652
2-08-61	SEAL, Ball Joint	6	2	2071 255		
	SC1, SC2		2	---- ---	1825 487	1825 487
	SC3, SY1	8	2	---- ---	---- ---	1825 761

★ Indicates use as required. Numerals in parentheses ( ) refer to notes. Printed in U.S.A.
⊟ Indicates parts not listed in any previous parts book. Prices and specifications subject to change without notice.
* Indicates change or addition. March 8, 1963 Supersedes May 1, 1962.

MyMopar.com

CODE	PART NAME AND DESCRIPTION	CYL.	PER CAR	VALIANT LANCER	PLYMOUTH DODGE	CHRYSLER IMPERIAL
2-08-0	**FRONT WHEEL UPPER CONTROL ARM - Cont'd**					
2-08-62	WASHER, Ball Joint Stud Nut		2	---- ---	1672 960	1672 960
2-08-63	BRACKET, Control Arm Mounting, Right	6	1	2081 840		
	Left	6	1	2081 841		
	Right		1	---- ---	2204 184	
	Left		1	---- ---	2204 185	
2-08-68	NUT, Ball Joint Stud	6	2	273 705		
	SC1, SC2		2	---- ---	128 025	128 025
	SC3, SY1	8	2	---- ---	---- ---	128 027
2-08-70	REINFORCEMENT, Control Arm Mounting Bracket		2	---- ---	2204 244	
2-08-71	NUT, Control Arm Bolt		4	1825 449	1825 449	1825 449
2-08-72	PLUG, Upper Ball Joint		2	1858 115	1858 115	1858 115
2-10-0	**FRONT WHEEL LOWER CONTROL ARM**					
2-10-6	ARM, Right	6	1	2071 468		
	Right, except SD3		1	---- ---	1857 992	
	Right, SD3, SC1, SC2	8	1	---- ---	1858 150	1858 150
	Right, SC3, SY1	8	1	---- ---	---- ---	1858 160
	RIVET, Lower Control Arm Plate, Right		4	6023 293	6023 293	
2-10-7	ARM, Left	6	1	2071 469		
	Left, except SD3		1	---- ---	1857 993	
	Left, SD3, SC1, SC2	8	1	---- ---	1858 151	1858 151
	Left, SC3, SY1	8	1	---- ---	---- ---	1858 161
	RIVET, Lower Control Arm Plate, Left		4	6023 293	6023 293	
2-10-10	BUMPER, Std., except SD3		2	1858 070	1858 070	
	Std., except Sub. SD3	8	2	---- ---	1857 682	1857 682
	Std., Sub., SD3	8	2	---- ---	1858 153	1858 153
	Heavy Duty, except Sub. SD3	8	2	---- ---	1858 153	1858 153
2-10-17	NUT, Bumper Retainer		2	6012 031	6012 031	6012 031
2-10-55	ARM and BALL JOINT PACKAGE, Steering Knuckle Housing Lower, Right	6	1	2275 464		
	Left	6	1	2275 465		
	Right, except SD3		1	---- ---	2275 462	
	Left, except SD3		1	---- ---	2275 463	
	BALL JOINT PACKAGE, Lower, SC1, SC2	8	2	---- ---	---- ---	2298 535
	SC3, SY1	8	2	---- ---	---- ---	2298 537
	BALL JOINT PACKAGE, Lower, SD3, SC1, SC2			---- ---	2298 535	2298 535
2-10-57	BUSHING and RETAINER PACKAGE	6	2	2084 918		
			2	---- ---	2084 045	2084 045
2-10-58	STRUT	6	2	2071 417		
	Except SD3		2	---- ---	1857 901	
	Right, w/Sway Eliminator, SD3, SC1, SC2	8	1	---- ---	1671 418	1671 418
	Left, w/Sway Eliminator, SD3, SC1, SC2	8	1	---- ---	1671 419	1671 419
	Right, w/o Sway Eliminator, SD3, SC1, SC2	8	1	---- ---	1731 402	1731 402
	Left, w/o Sway Eliminator, SD3, SC1, SC2	8	1	---- ---	1731 403	1731 403
	Right, w/Sway Eliminator and 413 cu. in. Eng., SC2	8	1	---- ---	---- ---	1825 696
	Left, w/Sway Eliminator and 413 cu. in. Eng., SC2	8	1	---- ---	---- ---	1825 697
	Right, SC3, SY1	8	1	---- ---	---- ---	1672 962
	Left, SC3, SY1	8	1	---- ---	---- ---	1672 963
2-10-59	BUSHING, Lower Control Arm Strut	6	2	2071 443		
			2	---- ---	1734 321	1734 321
2-10-60	RETAINER, Strut Bushing	6	4	2071 211		
			4	---- ---	1734 341	1734 341

★ Indicates use as required. Numerals in parentheses ( ) refer to notes. Printed in U.S.A.
⊟ Indicates parts not listed in any previous parts book. Prices and specifications subject to change without notice.
March 8, 1963 Supersedes May 1, 1962. * Indicates change or addition.

MyMopar.com

CODE	PART NAME AND DESCRIPTION	CYL.	PER CAR	VALIANT LANCER	PLYMOUTH DODGE	CHRYSLER IMPERIAL
2-10-0	**FRONT WHEEL LOWER CONTROL ARM - Cont'd**					
2-10-61	SHAFT PACKAGE, Lower Control Arm	6	2	2275 461		
	Except SD3		2	---- ---	*2275 460	
	SHAFT and BUSHING PACKAGE, SD3, SC1, SC2	8	2	---- ---	*1881 650	*1881 650
	SC3, SY1	8	2	---- ---	---- ---	1881 647
2-10-62	BOLT, Strut		4	---- ---	1825 350	1825 350
2-10-63	NUT, Strut Bushing	6	2	*6022 136		
	Strut		2	6025 056	6025 056	
	Strut Bushing Front		2	---- ---	1825 432	1825 432
	Strut Bolt Rear		4	---- ---	1825 449	1825 449
2-10-64	PLUG, Lower Ball Joint		2	1858 115	1858 115	1858 115
2-10-66	SEAL, Ball Joint, except SD3		2	*1858 209	*1858 209	
	SD3, SC1, SC2	8	2	---- ---	*1825 488	*1825 488
	SC3, SY1	8	2	---- ---	---- ---	1825 762
2-10-67	WASHER, Ball Joint Stud Nut, SC1, SC2		2	---- ---	1672 960	1672 960
	SC3, SY1	8	2	---- ---	---- ---	1672 961
2-10-68	NUT, Ball Joint Stud, SC1, SC2		2	128 027	128 027	128 027
	SC3, SY1	8	2	---- ---	---- ---	1671 405
2-10-72	SPACER, Bumper, except SD3		2	*1858 247	*1858 247	
	SD3	8	2	---- ---	*1858 155	*1858 155
2-10-74	WASHER, Shaft		2	2071 470	2071 470	
2-10-76	BUSHING, Shaft, except SD3		2	*1858 024	*1858 024	
	SD3, SC1, SC2	8	2	---- ---	*1636 017	*1636 017
	SC3, SY1	8	2	---- ---	---- ---	1636 010
2-14-0	**FRONT SUSPENSION TORSION PARTS**					
2-14-1	BOLT and SWIVEL PACKAGE, Bar or Spring, Front End Adjusting, Std.	6	2	2275 469		
	Heavy Duty	6	2	2275 470		
	Std., except SD3		2	---- ---	*2275 468	
	Heavy Duty, except SD3		2	---- ---	*2275 469	
	Rear End Anchor Adjusting, SD3, SC1, SC2, SC3	8	2	---- ---	*2196 773	*2196 773
	SY1	8	2	---- ---	---- ---	2196 774

NOTE: The anchor end of Torsion Bars or Springs, are stamped with the last 3 digits of the part number. If the stamped number is 622, the Torsion Bar or Spring, will be applicable to the right side of the car, since the last digit of the part number is an even number. Left side is indicated by an odd digit.

2-14-3	BAR or SPRING, Right, Std.	6	1	2071 622		
	Left, Std.	6	1	2071 623		
	Right, Heavy Duty	6	1	2071 626		
	Left, Heavy Duty	6	1	2071 627		
	Right, Std., except Sub., except SD3	6	1	---- ---	*1857 774	
	Left, Std., except Sub., except SD3	6	1	---- ---	*1857 775	
	Right, Std., Sub., except SD3	6	1	---- ---	*1857 776	
	Left, Std., Sub., except SD3	6	1	---- ---	*1857 777	
	Right, Std., except SD3	8	1	---- ---	*1857 776	
	Left, Std.,except SD3	8	1	---- ---	*1857 777	
	Right, Heavy Duty, w/o Sway Eliminator, Sub., except SD3		1	---- ---	*1857 778	
	Left, Heavy Duty, w/o Sway Eliminator, Sub., except SD3		1	---- ---	*1857 779	

★ Indicates use as required. Numerals in parentheses ( ) refer to notes. Printed in U.S.A.
⊟ Indicates parts not listed in any previous parts book. Prices and specifications subject to change without notice.
* Indicates change or addition. May 1, 1962 Supersedes Nov. 30, 1961.

MyMopar.com

CODE	PART NAME AND DESCRIPTION	CYL.	PER CAR	VALIANT LANCER	PLYMOUTH DODGE	CHRYSLER IMPERIAL
2-14-0	**FRONT SUSPENSION TORSION PARTS - Cont'd**					
2-14-3	BAR or SPRING - Cont'd					
	Right, Heavy Duty, w/o Sway Eliminator, except SD3		1	---- ---	*1857 778	
	Left, Heavy Duty, w/o Sway Eliminator, except SD3		1	---- ---	*1857 779	
	Right, Std., w/o Sway Eliminator, SD3, SC1, SC2	8	1	---- ---	*1825 610	*1825 610
	Left, Std., w/o Sway Eliminator, SD3, SC1, SC2.	8	1	---- ---	*1825 611	*1825 611
	Right, w/Sway Eliminator, SD3, SC1, SC2	8.	1	---- ---	*1825 604	*1825 604
	Left, w/Sway Eliminator, SD3, SC1, SC2	8	1	---- ---	*1825 605	*1825 605
	Right, Heavy Duty, w/Sway Eliminator, SD3, SC1, SC2	8	1	---- ---	*1825 606	*1825 606
	Left, Heavy Duty, w/Sway Eliminator, SD3, SC1, SC2	8	1	---- ---	*1825 607	*1825 607
	Right, Std., SC3	8	1	---- ---	---- ---	1825 708
	Left, Std., SC3	8	1	---- ---	---- ---	1825 709
	Right, Heavy Duty, SC3	8	1	---- ---	---- ---	1825 704
	Left, Heavy Duty, SC3	8	1	---- ---	---- ---	1825 705
	Right, Std., SY1	8	1	---- ---	---- ---	2275 508
	Left, Std., SY1	8	1	---- ---	---- ---	2275 509
	Right, Heavy Duty, SY1	8	1	---- ---	---- ---	2275 510
	Left, Heavy Duty, SY1	8	1	---- ---	---- ---	2275 511
2-14-8	ANCHOR PACKAGE, Torsion Bar or Spring,					
	Rear End, Right, SD3, SC1, SC2, SC3	8	1	---- ---	*2196 750	*2196 750
	Left, SD3, SC1, SC2, SC3	8	1	---- ---	*2196 751	*2196 751
	Right, SY1, except Cv. Cp.	8	1	---- ---	---- ---	2196 754
	Left, SY1, except Cv. Cp.	8	1	---- ---	---- ---	2196 755
	Right, SY1, Cv. Cp.	8	1	---- ---	---- ---	2196 752
	Left, SY1, Cv. Cp.	8	1	---- ---	---- ---	2196 753
2-14-12	SEAT, Spring Front End, Adjusting Bolt Nut, Seat, Bar or Spring, Rear End, Anchor Adjusting Bolt, SD3	8	2	---- ---	*1857 549	*1857 549
2-14-13	SEAL, Bar or Spring, Rear End Anchor, except SD3		2	*2071 173	*2071 173	
	SD3	8	2	---- ---	*1613 388	*1613 388
2-14-15	LOCK, Spring Rear End Anchor, except SD3		2	*1671 446	*1671 446	
	SD3	8	2	---- ---	*1639 171	*1639 171
2-14-19	PLUG, Spring Rear End Anchor, SD3, SC1, SC2, SC3	8	2	---- ---	*1857 580	*1857 580
	SY1	8	2	---- ---	---- ---	1825 582
2-14-25	RETAINER, Bar or Spring, Rear End Anchor, Adjusting Bolt SY1	8	2	---- ---	---- ---	1857 576

NOTES

MyMopar.com

GROUP 3 - AXLE - REAR

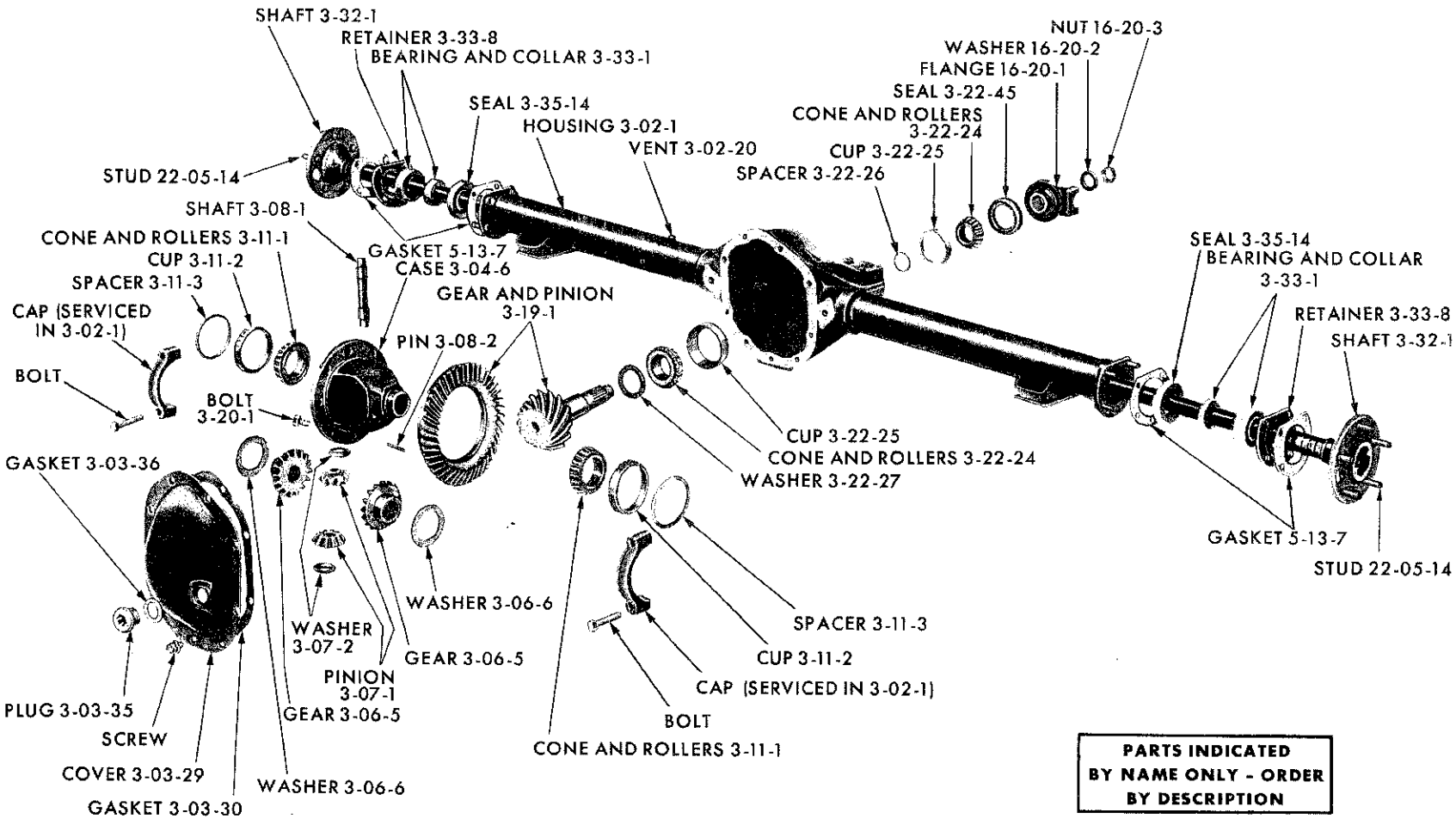

REAR AXLE DIFFERENTIAL AND CARRIER - VALIANT SV1 AND LANCER SL1

MyMopar.com

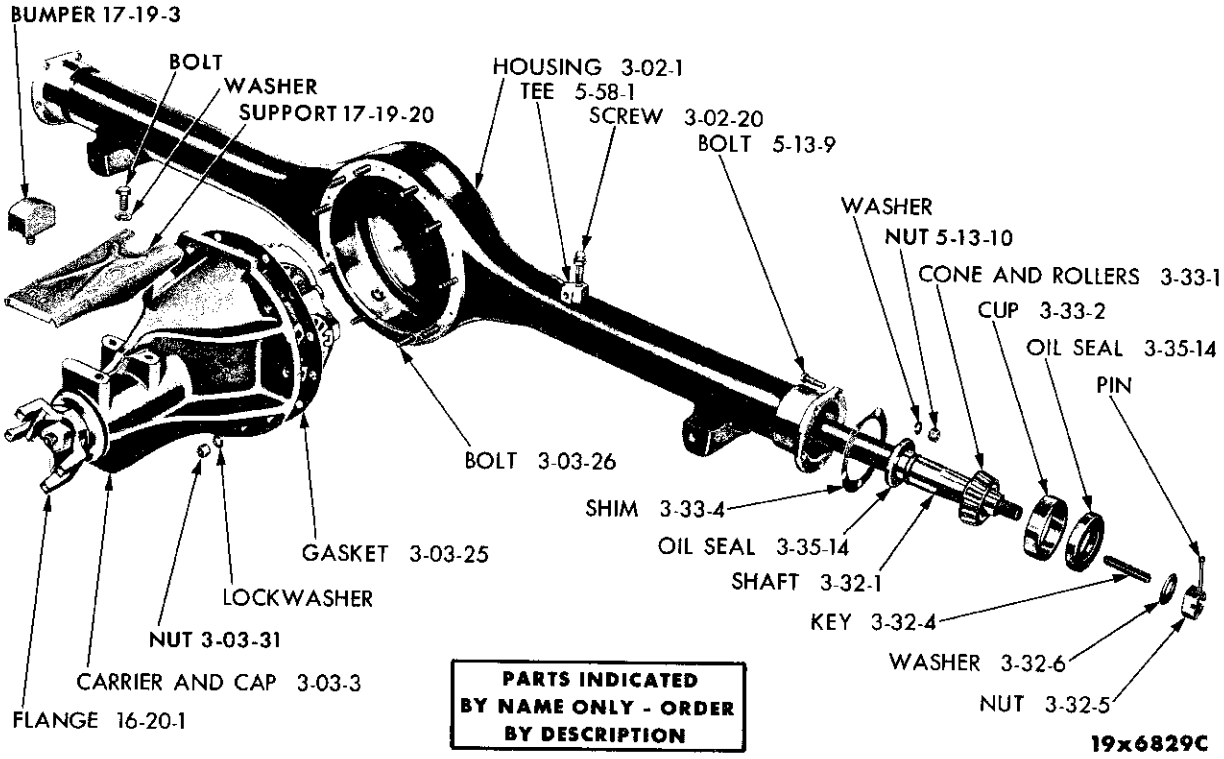

REAR AXLE HOUSING AND CARRIER - EXCEPT VALIANT SV1 AND LANCER SL1

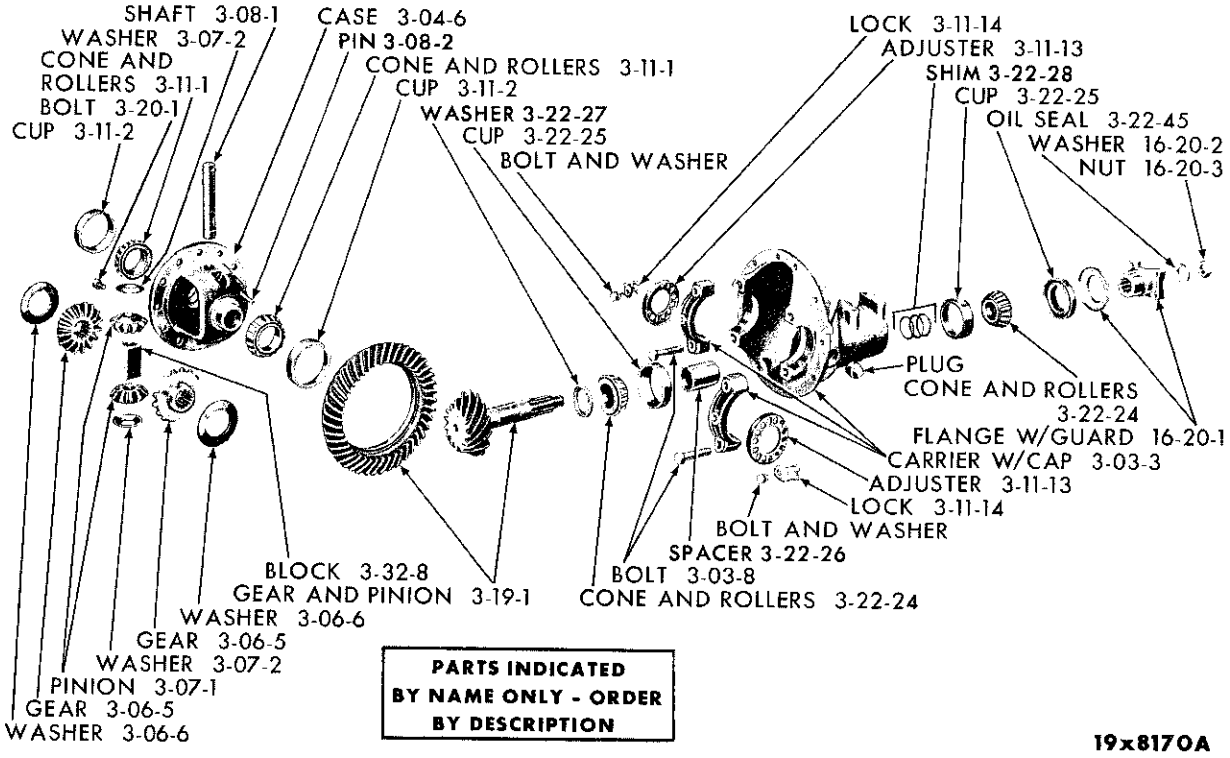

REAR AXLE DIFFERENTIAL AND CARRIER - EXCEPT VALIANT SV1 AND LANCER SL1

MyMopar.com

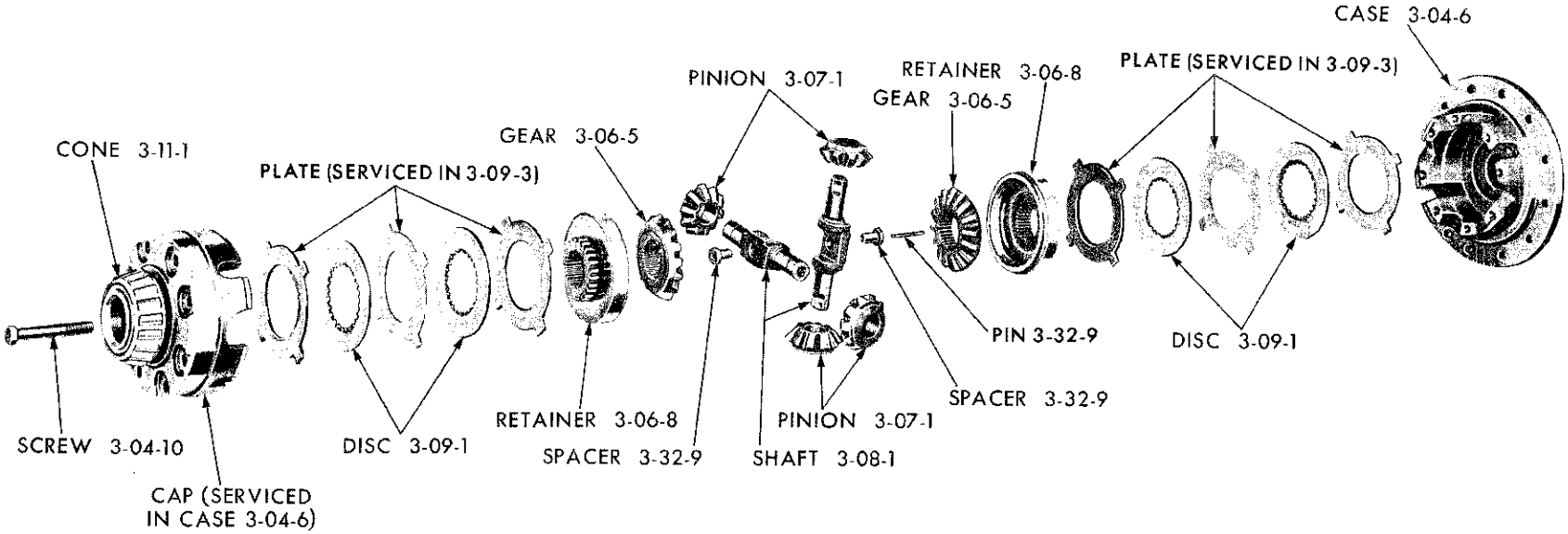

19x8320C

"NO SPIN" REAR AXLE DIFFERENTIAL - EXCEPT VALIANT SV1 AND LANCER SL1

MyMopar.com

CODE	PART NAME AND DESCRIPTION	CYL.	PER CAR	VALIANT LANCER	PLYMOUTH DODGE	CHRYSLER IMPERIAL

NOTES

★ Indicates use as required.
⊟ Indicates parts not listed in any previous parts book.
September 15, 1961.

Printed in U.S.A.
Prices and specifications subject to change without notice.

MyMopar.com

CODE	PART NAME AND DESCRIPTION	CYL.	PER CAR	VALIANT LANCER	PLYMOUTH DODGE	CHRYSLER IMPERIAL
3-01-0	**REAR AXLE CONTROL STRUT**					
3-01-25	STRUT, SY1	8	2	---- ---	---- ---	1730 160
3-01-28	BUSHING, SY1	8	4	---- ---	---- ---	1635 600
3-01-30	SPACER, SY1	8	★	---- ---	---- ---	1731 769
3-01-33	HANGER, SY1	8	2	---- ---	---- ---	1731 738
	BRACKET, Frame, Right, SY1	8	1	---- ---	---- ---	⊟1829 998
	Left	8	1	---- ---	---- ---	⊟1829 999
3-01-34	BOLT, Hanger, 3/8" - 24, SY1	8	8	---- ---	---- ---	1731 789
	3/8" - 16, SY1	8	8	---- ---	---- ---	2403 247
3-01-35	NUT, Bolt, 3/8" - 24, SY1	8	8	---- ---	---- ---	1736 993
3-02-0	**REAR AXLE HOUSING**					
3-02-1	HOUSING	6	1	2070 012		
	SP1, SP2, SD1, SD2		1	---- ---	2070 539	
	SD3, SC1, SC2, SC3	8	1	---- ---	2070 270	2070 270
	SY1	8	1	---- ---	---- ---	2070 231
3-02-9	SPACER, Housing to Carrier Bolt Nut, SY1	8	1	---- ---	---- ---	1940 447
3-02-20	SCREW, Vent	6	1	2070 369		
	SC1, SC2, SC3		1	---- ---	2070 514	2070 514
	SY1	8	1	---- ---	---- ---	1139 204
3-03-0	**REAR AXLE DIFFERENTIAL AND CARRIER**					
3-03-1	DIFFERENTIAL, w/CARRIER and TUBES, 3.23 to 1 ratio	6	1	2070 619		
	3.55 to 1 ratio	6	1	2070 620		
	3.9 to 1 ratio	6	1	2070 621		
	2.93 to 1 ratio, w/225 cu. in. Eng.	6	1	2070 597		
	DIFFERENTIAL, w/CARRIER, 2.93 to 1 ratio, w/8 1/4" dia. Gear	6	1	---- ---	2070 797	
	3.31 to 1 ratio, w/8 1/4" dia. Gear	6	1	---- ---	2070 798	
	2.76 to 1 ratio, w/8 3/4" dia. Gear, SP1, SP2, SD1, SD2		1	---- ---	2070 654	
	3.23 to 1 ratio, w/8 3/4" dia. Gear, SP1, SP2, SD1, SD2		1	---- ---	2070 771	
	3.55 to 1 ratio, w/8 3/4" dia. Gear, SP1, SP2, SD1, SD2		1	---- ---	2070 908	
	3.91 to 1 ratio, w/8 3/4" dia. Gear, SP1, SP2, SD1, SD2		1	---- ---	1828 517	
	2.76 to 1 ratio, w/Sure-Grip, w/8 3/4" dia. Gear, SP1, SP2, SD1, SD2	8	1	---- ---	2070 693	
	3.23 to 1 ratio, w/Sure-Grip, w/8 3/4" dia. Gear SP1, SP2, SD1, SD2	8	1	---- ---	2070 774	
	2.93 to 1 ratio, w/8 3/4" dia. Gear	8	1	---- ---	2070 579	2070 579
	3.23 to 1 ratio, w/8 3/4" dia. Gear, SD3, SC1, SC2, SC3	8	1	---- ---	2070 811	2070 811
	3.55 to 1 ratio, w/8 3/4" dia. Gear, SC3, Armbruster	8	1	---- ---	---- ---	2070 911
	2.93 to 1 ratio, w/Sure-Grip, w/8 3/4" dia. Gear, SD3	8	1	---- ---	2070 583	2070 583
	3.23 to 1 ratio, w/Sure-Grip, w/8 3/4" dia. Gear, SD3, SC1, SC2	8	1	---- ---	2070 813	2070 813
	3.91 to 1 ratio, w/Sure-Grip, SP2, SD2, w/413 cu. in. Engine	8	1	---- ---	*2404 128	
3-03-2	DIFFERENTIAL ASSEMBLY, Partial, w/Sure-Grip	8	1	---- ---	2070 824	2070 824

★ Indicates use as required. Numerals in parentheses ( ) refer to notes. Printed in U.S.A.
⊟ Indicates parts not listed in any previous parts book. Prices and specifications subject to change without notice.
* Indicates change or addition. March 8, 1963 Supersedes May 1, 1962.

MyMopar.com

CODE	PART NAME AND DESCRIPTION	CYL.	PER CAR	VALIANT LANCER	PLYMOUTH DODGE	CHRYSLER IMPERIAL
3-03-0	**REAR AXLE DIFFERENTIAL AND CARRIER - Cont'd**					
3-03-3	CARRIER, w/CAPS, w/8 1/4" dia. Gear	6	1	---- ---	2070 782	
	w/8 3/4" Gear, 1 3/8" dia. Stem, SD3, SC1, except Sub., SP1, SP2, SD1, SD2		1	---- ---	*1820 698	*1820 698
	w/Sure-Grip, w/8 3/4" dia. Gear, 1 3/4" dia. Stem, SD3, SC1, except Sub.	8	1	---- ---	*1634 984	*1634 984
	w/8 3/4" dia. Gear, 1 3/4" dia. Stem., SD3	8	1	---- ---	*1634 984	*1634 984
3-03-8	SCREW, Cap		4	---- ---	314 948	314 948
3-03-25	GASKET, Carrier		1	---- ---	1673 367	1673 367
3-03-26	BOLT, Housing to Carrier		★	---- ---	1135 197	1135 197
3-03-29	COVER, Carrier	6	1	2070 119		
3-03-30	GASKET, Cover	6	1	2070 120		
3-03-31	NUT, Housing to Carrier Bolt		★	---- ---	1485 066	1485 066
	SY1	8	1	---- ---	---- ---	1940 596
3-03-35	PLUG, Cover Filler	6	1	2129 351		
3-03-36	GASKET, Plug	6	1	2070 122		
3-04-0	**DIFFERENTIAL CASE**					
3-04-6	CASE	6	1	2070 537		
	w/8 1/4" dia. Gear, 3.31 to 1 ratio	6	1	---- ---	2070 706	
	w/8 1/4" dia. Gear, 2.93 to 1 ratio	6	1	---- ---	2070 704	
	w/8 3/4" dia. Gear		1	---- ---	1850 370	1850 370
	w/Sure-Grip	8	1	---- ---	1945 749	1945 749
3-04-10	SCREW, Case Cap, w/Sure-Grip	8	8	---- ---	1945 751	1945 751
3-06-0	**DIFFERENTIAL SIDE GEAR**					
3-06-5	GEAR	6	2	2070 023		
	w/8 1/4" dia. Gear	6	2	---- ---	2070 242	
	w/8 3/4" dia. Gear		2	---- ---	2070 148	2070 148
	w/Sure-Grip	8	2	---- ---	1829 448	1829 448
3-06-6	WASHER, Thrust	6	2	2070 024		
	w/ 8 1/4" dia. Gear	6	2	---- ---	2070 820	
	w/8 3/4" dia. Gear		2	---- ---	1633 960	1633 960
3-06-8	RETAINER, w/Sure-Grip	8	1	---- ---	1829 447	1829 447
3-07-0	**DIFFERENTIAL PINION**					
3-07-1	PINION	6	2	2070 025		
	w/8 1/4" dia. Gear	6	2	---- ---	1326 219	
	w/8 3/4" dia. Gear		2	---- ---	1633 959	1633 959
	w/Sure-Grip	8	4	---- ---	1829 449	1829 449
3-07-2	WASHER	6	2	2070 026		
	w/8 1/4" dia. Gear	6	2	---- ---	2070 821	
	w/8 3/4" dia. Gear		2	---- ---	1633 961	1633 961
3-08-0	**DIFFERENTIAL PINION SHAFT**					
3-08-1	SHAFT	6	1	2070 027		
	w/8 1/4" dia. Gear	6	1	---- ---	663 480	
	w/8 3/4" dia. Gear		1	---- ---	1633 928	1633 928
	w/Sure-Grip	8	2	---- ---	1829 446	1829 446
3-08-2	PIN, Lock	6	1	152 229		
			1	---- ---	1633 937	1633 937

★ Indicates use as required. Numerals in parentheses ( ) refer to notes. Printed in U.S.A.
⊟ Indicates parts not listed in any previous parts book. Prices and specifications subject to change without notice.
May 1, 1962 Supersedes Sept. 15, 1961. * Indicates change or addition.

MyMopar.com

CODE	PART NAME AND DESCRIPTION	CYL.	PER CAR	VALIANT LANCER	PLYMOUTH DODGE	CHRYSLER IMPERIAL
3-09-0	**DIFFERENTIAL CLUTCH PARTS**					
3-09-1	DISC, Clutch, w/Sure-Grip	8	★	---- ---	*1829 451	*1829 451
3-09-3	REPAIR KIT, Differential Sure-Grip	8	1	---- ---	2070 845	2070 845
3-11-0	**DIFFERENTIAL BEARINGS**					
3-11-1	CONE, w/ROLLERS	6	2	1937 771		
	w/8 1/4" dia. Gear	6	2	---- ---	698 404	
	w/8 3/4" dia. Gear		2	---- ---	1790 523	1790 523
3-11-2	CUP	6	2	1937 770		
			2	---- ---	698 403	698 403
3-11-3	SPACER, Adjusting, .2540" thk.	6	2	2070 082		
	.2560" thk.	6	2	2070 441		
	.2580" thk.	6	2	2070 442		
	.2600" thk.	6	2	2070 084		
	.2620" thk.	6	2	2070 443		
	.2640" thk.	6	2	2070 444		
	.2660" thk.	6	2	2070 086		
	.2680" thk.	6	2	2070 445		
	.2700" thk.	6	2	2070 446		
	.2720" thk.	6	2	2070 088		
	.2740" thk.	6	2	2070 447		
	.2760" thk.	6	2	2070 448		
	.2780" thk.	6	2	2070 090		
	.2800" thk.	6	2	2070 449		
	.2820" thk.	6	2	2070 450		
	.2840" thk.	6	2	2070 092		
3-11-13	ADJUSTER		2	---- ---	601 864	601 864
3-11-14	LOCK, Adjuster		2	---- ---	308 247	308 247
3-19-0	**DRIVE GEAR AND PINION SET**					
3-19-1	GEAR and PINION SET, 3.23 to 1 ratio	6	1	2070 563		
	3.55 to 1 ratio	6	1	2070 564		
	3.91 to 1 ratio	6	1	2070 565		
	2.93 to 1 ratio, w/225 cu. in. Eng.	6	1	2070 596		
	3.31 to 1 ratio, 8 1/4" dia. Gear	6	1	---- ---	2070 809	
	2.93 to 1 ratio, 8 1/4" dia. Gear	6	1	---- ---	2070 808	
	2.76 to 1 ratio, 8 3/4" dia. Gear, 1 3/8" dia. Stem, SP1, SP2, SD1, SD2		1	---- ---	2070 689	
	3.23 to 1 ratio, 8 3/4" dia. Gear, 1 3/8" dia. Stem, SP1, SP2, SD1, SD2		1	---- ---	2070 816	
	3.55 to 1 ratio, 8 3/4" dia. Gear, 1 3/8" dia. Stem, SP1, SP2, SD1, SD2		1	---- ---	2070 915	
	3.91 to 1 ratio, 8 3/4" dia. Gear, 1 3/8" dia. Stem, SP1, SP2, SD1, SD2		1	---- ---	2070 300	
	2.93 to 1 ratio, 8 3/4" dia. Gear, 1 3/8" dia. Stem, SD3, SC1, except Sub., SP2, SD2	8	1	---- ---	2070 569	2070 569
	2.93 to 1 ratio, 8 3/4" dia. Gear, 1 3/4" dia. Stem, w/Sure-Grip, SD3, SC1, except Sub.	8	1	---- ---	2070 570	2070 570
	2.93 to 1 ratio, 8 3/4" dia. Gear, 1 3/4" dia. Stem	8	1	---- ---	*2070 570	*2070 570
	3.23 to 1 ratio, 8 3/4" dia. Gear, 1 3/4" dia. Stem, SC1, SC2, SC3	8	1	---- ---	*2070 817	*2070 817
	3.55 to 1 Ratio, SP2, SD2, w/383 and 413 cu. in. Engine	8	1	---- ---	*2070 916	

★ Indicates use as required. Numerals in parentheses ( ) refer to notes. Printed in U.S.A.
⊟ Indicates parts not listed in any previous parts book. Prices and specifications subject to change without notice.
* Indicates change or addition. March 8, 1963 Supersedes May 1, 1962.

MyMopar.com

CODE	PART NAME AND DESCRIPTION	CYL.	PER CAR	VALIANT LANCER	PLYMOUTH DODGE	CHRYSLER IMPERIAL
3-19-0	**DRIVE GEAR AND PINION SET - Cont'd**					
3-19-1	GEAR and PINION SET - Cont'd					
	3.91 to 1 Ratio, SP2, SD2, w/383 and 413 cu. in. Engine	8	1	---- ---	*1673 389	
	4.1 to 1 Ratio, SP2, SD2, w/383 and 413 cu. in. Engine	8	1	---- ---	*1673 390	
	4.3 to 1 Ratio, SP2, SD2, w/383 and 413 cu. in. Engine	8	1	---- ---	*1738 822	
	4.56 to 1 Ratio, SP2, SD2, w/383 and 413 cu. in. Engine	8	1	---- ---	*1738 823	
	4.89 to 1 Ratio, SP2, SD2, w/383 and 413 cu. in. Engine	8	1	---- ---	*1738 824	
	3.55 to 1 ratio, 8 3/4" dia. Gear, 1 3/4" dia. Stem, SC3 Armbruster	8	1	---- ---	---- ---	2070 916
3-20-0	**DRIVE GEAR BOLT**					
3-20-1	BOLT		★	1675 485	1675 485	1675 485
	w/Sure-Grip	8	12	---- ---	1945 768	1945 768
3-22-0	**DRIVE PINION BEARINGS**					
3-22-24	CONE, Front Bearing, w/ROLLERS	6	1	2070 316		
	Rear	6	1	2070 318		
	Front, w/1 3/8" Stem, SD3, SC1, except Sub., SP1, SP2, SD1, SD2		1	---- ---	1820 552	1820 552
	Rear, w/1 3/8" Stem, SD3, SC1, except Sub., SP1, SP2, SD1, SD2		1	---- ---	1401 809	1401 809
	Front, w/1 3/4" dia. Stem, SD3	8	1	---- ---	1401 808	1401 808
	Rear, w/1 3/4" dia. Stem, SD3	8	1	---- ---	1404 472	1404 472
3-22-25	CUP, Front Bearing	6	1	2070 317		
	Rear	6	1	2070 319		
	Front, w/1 3/8" dia. Stem, SD3, SC1, except Sub., SP1, SP2, SD1, SD2		1	---- ---	1820 551	1820 551
	Rear, w/1 3/8" dia. Stem, SD3, SC1, except Sub., SP1, SP2, SD1, SD2		1	---- ---	1401 810	1401 810
	Front, w/1 3/4" dia. Stem, SD3	8	1	---- ---	1401 810	1401 810
	Rear, w/1 3/4" dia. Stem, SD3	8	1	---- ---	1327 847	1327 847
3-22-26	SPACER, Front Bearing Adjusting, .074" thk.	6	★	2070 094		
	.075" thk.	6	★	2070 454		
	.076" thk.	6	★	2070 095		
	.077" thk.	6	★	2070 455		
	.078" thk.	6	★	2070 096		
	.079" thk.	6	★	2070 456		
	.080" thk.	6	★	2070 097		
	.081" thk.	6	★	2070 457		
	.082" thk.	6	★	2070 098		
	.083" thk.	6	★	2070 458		
	.084" thk.	6	★	2070 099		
	.085" thk.	6	★	2070 459		
	.086" thk.	6	★	2070 100		
	.087" thk.	6	★	2070 460		
	.088" thk.	6	★	2070 101		
	.089" thk.	6	★	2070 461		
	.090" thk.	6	★	2070 102		
	.091" thk.	6	★	2070 462		
	.092" thk.	6	★	2070 103		
	.093" thk.	6	★	2070 463		
	.094" thk.	6	★	2070 104		
	.095" thk.	6	★	2070 464		
	.096" thk.	6	★	2070 105		
	.097" thk.	6	★	2070 465		
	.098" thk.	6	★	2070 106		

★ Indicates use as required. Numerals in parentheses ( ) refer to notes. Printed in U.S.A.
⊟ Indicates parts not listed in any previous parts book. Prices and specifications subject to change without notice.
March 8, 1963 Supersedes May 1, 1962. * Indicates change or addition.

MyMopar.com

CODE	PART NAME AND DESCRIPTION	CYL.	PER CAR	VALIANT LANCER	PLYMOUTH DODGE	CHRYSLER IMPERIAL
3-22-0	**DRIVE PINION BEARINGS - Cont'd**					
3-22-26	SPACER - Cont'd					
	.099" thk.	6	★	2070 466		
	.100" thk.	6	★	2070 107		
	.101" thk.	6	★	2070 467		
	.102" thk.	6	★	2070 108		
	.103" thk.	6	★	2070 468		
	.104" thk.	6	★	2070 109		
	.105" thk.	6	★	2070 469		
	.106" thk.	6	★	2070 110		
	SPACER, Rear Bearing w/8 1/4" dia. Gear	6	1	---- ---	2070 709	
	w/8 3/4" dia. Gear, w/1 3/8" dia. Stem, SD3, SC1, except Sub., SP1, SP2, SD1, SD2		1	---- ---	1738 826	1738 826
3-22-27	WASHER, Rear Bearing, .084" thk.	6	★	1738 794		
	.086" thk.	6	★	1738 795		
	.088" thk.	6	★	1738 796		
	.090" thk.	6	★	1738 797		
	.092" thk.	6	★	1738 798		
	.094" thk.	6	★	1738 799		
	.096" thk.	6	★	1738 800		
	.098" thk.	6	★	1738 801		
	.100" thk.	6	★	1738 802		
	w/1 3/8" dia. Stem, .084" thk., SD3, SC1, except Sub., SP1, SP2, SD1, SD2		★	---- ---	1738 794	1738 794
	w/1 3/8" dia. Stem, .086" thk., SD3, SC1, except Sub., SP1, SP2, SD1, SD2		★	---- ---	1738 795	1738 795
	w/1 3/8" dia. Stem, .088" thk., SD3, SC1, except Sub., SP1, SP2, SD1, SD2		★	---- ---	1738 796	1738 796
	w/1 3/8" dia. Stem, .090" thk., SD3, SC1, except Sub., SP1, SP2, SD1, SD2		★	---- ---	1738 797	1738 797
	w/1 3/8" dia. Stem, .092" thk., SD3, SC1, except Sub., SP1, SP2, SD1, SD2		★	---- ---	1738 798	1738 798
	w/1 3/8" dia. Stem, .094" thk., SD3, SC1, except Sub., SP1, SP2, SD1, SD2		★	---- ---	1738 799	1738 799
	w/1 3/8" dia. Stem, .096" thk., SD3, SC1, except Sub., SP1, SP2, SD1, SD2		★	---- ---	1738 800	1738 800
	w/1 3/8" dia. Stem, .098" thk., SD3, SC1, except Sub., SP1, SP2, SD1, SD2		★	---- ---	1738 801	1738 801
	w/1 3/8" dia. Stem, .100" thk., SD3, SC1, except Sub., SP1, SP2, SD1, SD2		★	---- ---	1738 802	1738 802
	w/1 3/4" dia. Stem, .084" thk., SD3	8	★	---- ---	1738 812	1738 812
	w/1 3/4" dia. Stem, .086" thk., SD3	8	★	---- ---	1738 813	1738 813
	w/1 3/4" dia. Stem, .088" thk., SD3	8	★	---- ---	1738 814	1738 814
	w/1 3/4" dia. Stem, .090" thk., SD3	8	★	---- ---	1738 815	1738 815
	w/1 3/4" dia. Stem, .092" thk., SD3	8	★	---- ---	1738 816	1738 816
	w/1 3/4" dia. Stem, .094" thk., SD3	8	★	---- ---	1738 817	1738 817
	w/1 3/4" dia. Stem, .096" thk., SD3	8	★	---- ---	1738 818	1738 818
	w/1 3/4" dia. Stem, .098" thk., SD3	8	★	---- ---	1738 819	1738 819
	w/1 3/4" dia. Stem, .100" thk., SD3	8	★	---- ---	1738 820	1738 820
3-22-28	SHIM, Front Bearing Adjusting, w/1 3/8" dia. Stem, .014" thk., SD3, SC1, except Sub., SP1, SP2, SD1, SD2		★	---- ---	1820 703	1820 703
	w/1 3/8" dia. Stem, .016" thk., SD3, SC1, except Sub., SP1, SP2, SD1, SD2		★	---- ---	1820 704	1820 704
	w/1 3/8" dia. Stem, .018" thk., SD3, SC1, except Sub., SP1, SP2, SD1, SD2		★	---- ---	1820 705	1820 705
	w/1 3/8" dia. Stem, .020" thk., SD3, SC1, except Sub., SP1, SP2, SD1, SD2		★	---- ---	*1820 706	*1820 706
	w/1 3/8" dia. Stem, .22" thk., SD3, SC1, except Sub., SP1, SP2, SD1, SD2		★	---- ---	1828 725	1828 725

MyMopar.com

CODE	PART NAME AND DESCRIPTION	CYL.	PER CAR	VALIANT LANCER	PLYMOUTH DODGE	CHRYSLER IMPERIAL
3-22-0	**DRIVE PINION BEARINGS - Cont'd**					
3-22-28	SHIM - Cont'd					
	w/1 3/8" dia. Stem, 24" thk., SD3, SC1, except Sub., SP1, SP2, SD1, SD2		★	---- ---	1829 440	1829 440
	w/1 3/8" dia. Stem, .026" thk., SD3, SC1, except Sub., SP1, SP2, SD1, SD2		★	---- ---	1829 441	1829 441
	w/1 3/8" dia. Stem, .030" thk., SD3, SC1, except Sub., SP1, SP2, SD1, SD2		★	---- ---	*1820 707	*1820 707
	w/1 3/8" dia. Stem, .050" thk., SD3, SC1, except Sub., SP1, SP2, SD1, SD2		★	---- ---	*1820 709	*1820 709
	w/1 3/4" dia. Stem, .014" thk., SD3	8	★	---- ---	1738 805	1738 805
	w/1 3/4" dia. Stem, .016" thk., SD3	8	★	---- ---	1738 806	1738 806
	w/1 3/4" dia. Stem, .018" thk., SD3	8	★	---- ---	1738 807	1738 807
	w/1 3/4" dia. Stem, .022" thk., SD3	8	★	---- ---	1829 442	1829 442
	w/1 3/4" dia. Stem, .024" thk., SD3	8	★	---- ---	1829 443	1829 443
	w/1 3/4" dia. Stem, .026" thk., SD3	8	★	---- ---	1829 444	1829 444
3-22-45	OIL SEAL, Front Bearing	6	1	2070 113		
	w/1 3/8" dia. Stem, SD3, SC1, except Sub. SP1, SP2, SD1, SD2		1	---- ---	1738 831	1738 831
	w/1 3/4" dia. Stem, SD3	8	1	---- ---	1828 719	1828 719
3-32-0	**DRIVE SHAFT**					
3-32-1	SHAFT, w/BEARING, COLLAR and STUDS, Right	6	1	2070 142		
	Left	6	1	2070 143		
	SHAFT, SP1, SP2, SD1, SD2		2	---- ---	2070 573	
	w/Sure-Grip, SP2, SD2	8	2	---- ---	2070 695	
	SD3, SC1, SC2, SC3	8	2	---- ---	1675 448	1675 448
	w/Sure-Grip, SD3, SC1, SC2, SC3	8	2	---- ---	1829 266	1829 266
	SP2, SD2, w/413 cu. in. Engine	8	2	---- ---	⊟2404 050	
	SY1	8	2	---- ---	---- ---	1675 449
	w/Sure-Grip, SY1	8	2	---- ---	---- ---	1829 267
	SC3 Armbruster	8	2	---- ---	---- ---	1820 555
3-32-4	KEY		2	---- ---	1118 149	1118 149
3-32-5	NUT		2	---- ---	53 553	53 553
3-32-6	WASHER		2	---- ---	50 652	50 652
3-32-8	BLOCK, Thrust, w/8 1/4" dia. Gear	6	1	---- ---	2070 663	
	w/8 3/4" dia. Gear		1	---- ---	1940 604	1940 604
3-32-9	SPACER, Thrust Block, w/Sure-Grip	8	2	---- ---	1829 445	1829 445
	PIN, w/Sure-Grip	8	1	---- ---	273 703	273 703
3-33-0	**DRIVE SHAFT BEARINGS**					
3-33-1	CONE, w/CUP and COLLAR	6	2	*2421 069		
	CONE, w/ROLLERS, SC1, SC2, SC3		2	---- ---	* 698 400	* 698 400
	SC3 Armbruster, SY1	8	2	---- ---	---- ---	1673 375
3-33-2	CUP, SC1, SC2, SC2		2	---- ---	698 399	698 399
	SC3 Armbruster, SY1	8	2	---- ---	---- ---	1188 715
3-33-4	SHIM, .005" thk., w/1 3/8" dia. Stem, SP1, SP2, SD1, SD2		★	---- ---	2070 866	
	.012" thk., w/1 3/8" dia. Stem, SP1, SP2, SD1, SD2		★	---- ---	2070 868	
	.030" thk., w/1 3/8" dia. Stem, SP1, SP2, SD1, SD2		★	---- ---	2070 870	
	.005" thk., SD3	8	★	---- ---	1137 203	1137 203
	.012" thk., SD3	8	★	---- ---	681 320	681 320
	.030" thk., SD3	8	★	---- ---	681 322	681 322

★ Indicates use as required. Numerals in parentheses ( ) refer to notes. Printed in U.S.A.
⊟ Indicates parts not listed in any previous parts book. Prices and specifications subject to change without notice.
March 8, 1963 Supersedes May 1, 1962. * Indicates change or addition.

MyMopar.com

CODE	PART NAME AND DESCRIPTION	CYL.	PER CAR	VALIANT LANCER	PLYMOUTH DODGE	CHRYSLER IMPERIAL
3-33-0	**DRIVE SHAFT BEARINGS - Cont'd**					
3-33-8	RETAINER, Bearing	6	2	2070 153		
3-35-0	**DRIVE SHAFT OIL SEAL**					
3-35-14	OIL SEAL, Bearing	6	2	2070 130		
	Inner		2	---- ---	1673 373	1673 373
	Outer, SP1, SP2, SD1, SD2		2	---- ---	2265 811	
	Outer, SD3, SC1, SC2, SC3	8	2	---- ---	2201 889	2201 889
	Outer, SC3 Armbruster, SY1	8	2	---- ---	---- ---	2207 484

NOTES

MyMopar.com

CODE	PART NAME AND DESCRIPTION	CYL.	PER CAR	VALIANT LANCER	PLYMOUTH DODGE	CHRYSLER IMPERIAL

NOTES

★ Indicates use as required. Numerals in parentheses ( ) refer to notes. Printed in U.S.A.
⊟ Indicates parts not listed in any previous parts book. Prices and specifications subject to change without notice.
March 8, 1963. * Indicates change or addition.

MyMopar.com

GROUP 4 - BRAKE - PARKING

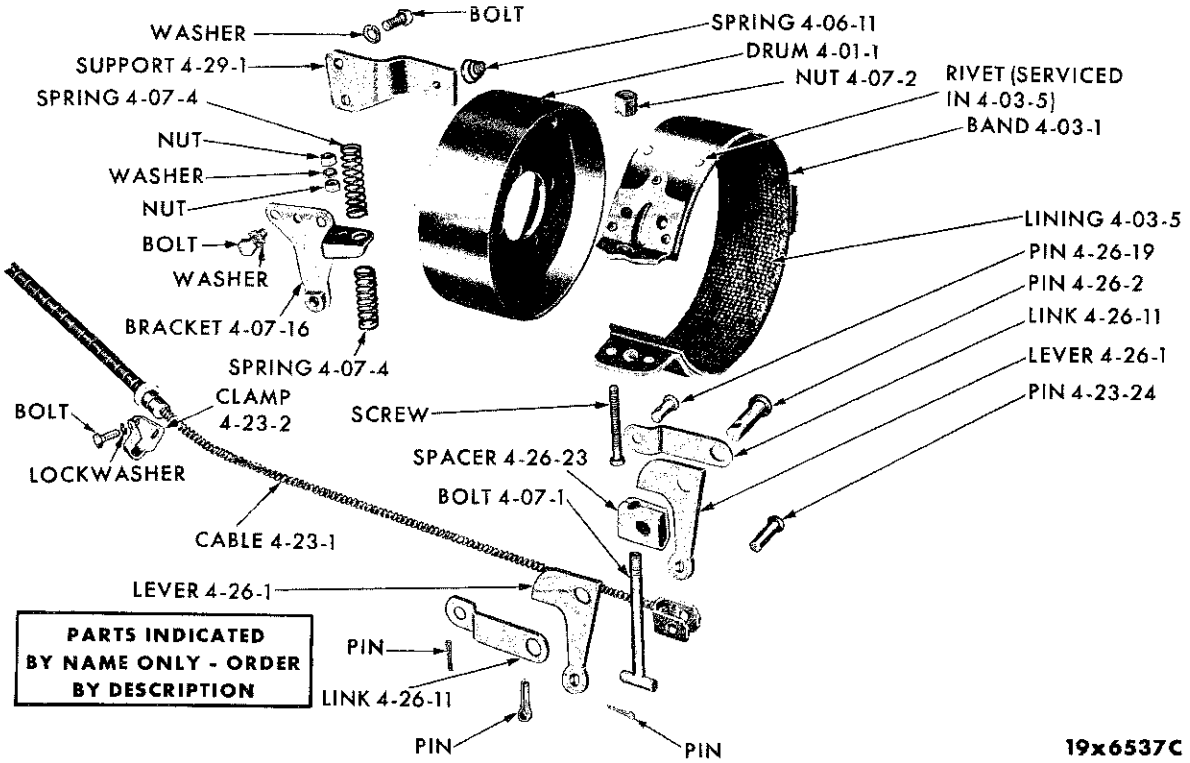

PARKING BRAKE (EXTERNAL PARTS) - DODGE SD3 AND CHRYSLER SC1-2 (WITH STANDARD TRANSMISSION)

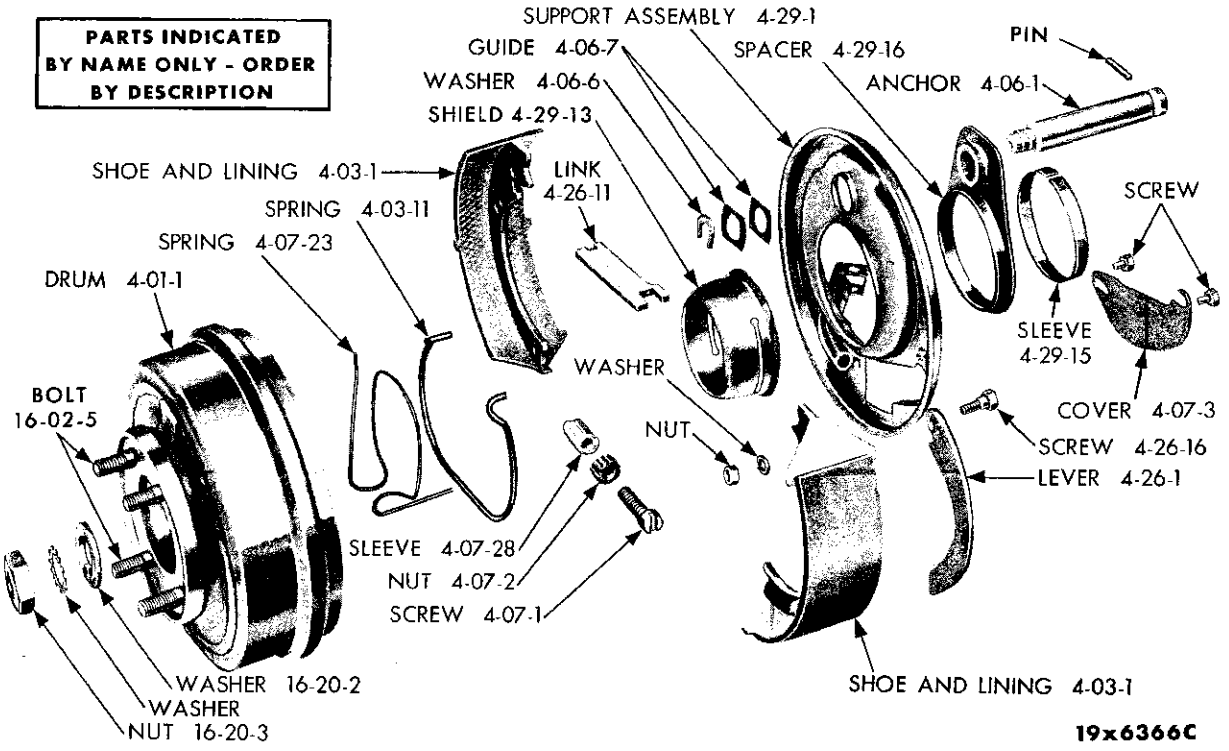

PARKING BRAKE (INTERNAL TYPE) - DODGE SD3, CHRYSLER SC1-2-3 AND IMPERIAL SY1 (WITH AUTOMATIC TRANSMISSION)

MyMopar.com

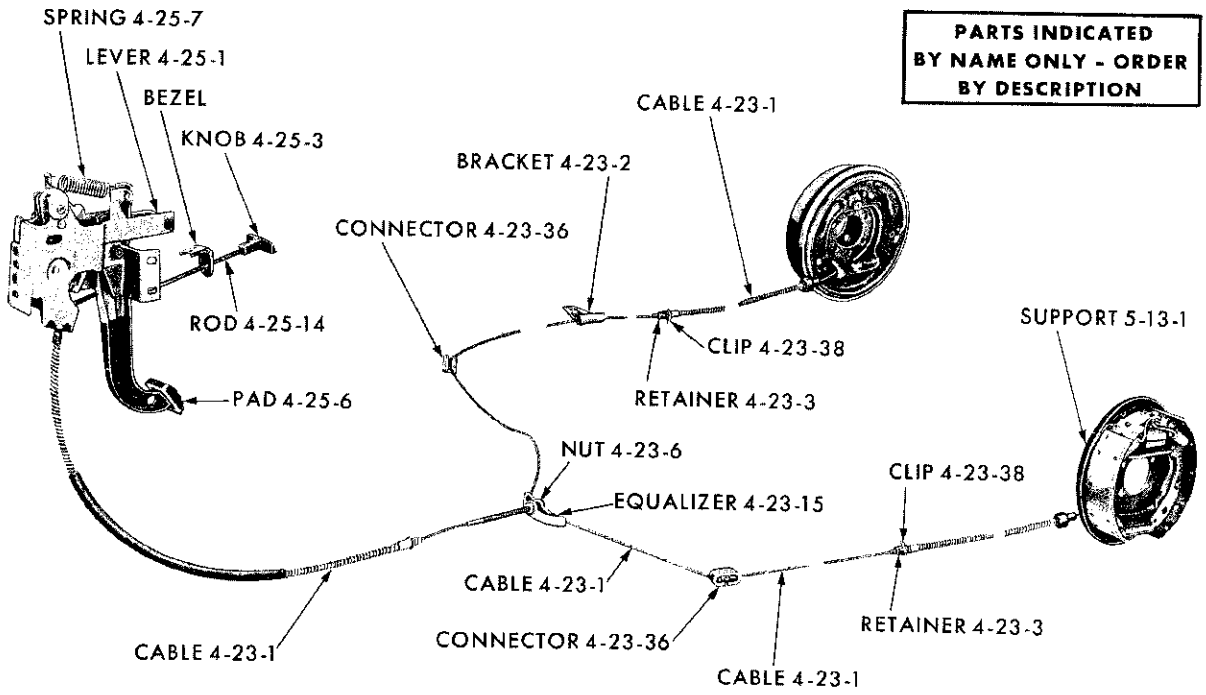

PARKING BRAKE SYSTEM - VALIANT SV1 AND LANCER SL1

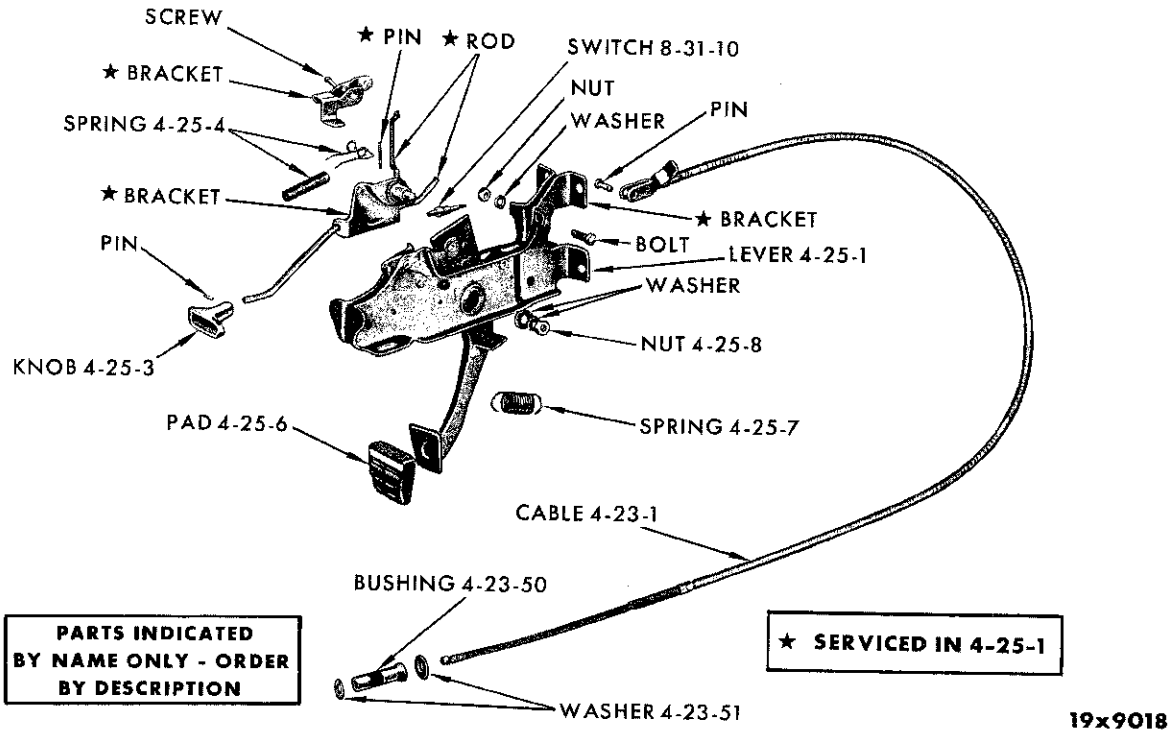

PARKING BRAKE CONTROLS - IMPERIAL SY1

MyMopar.com

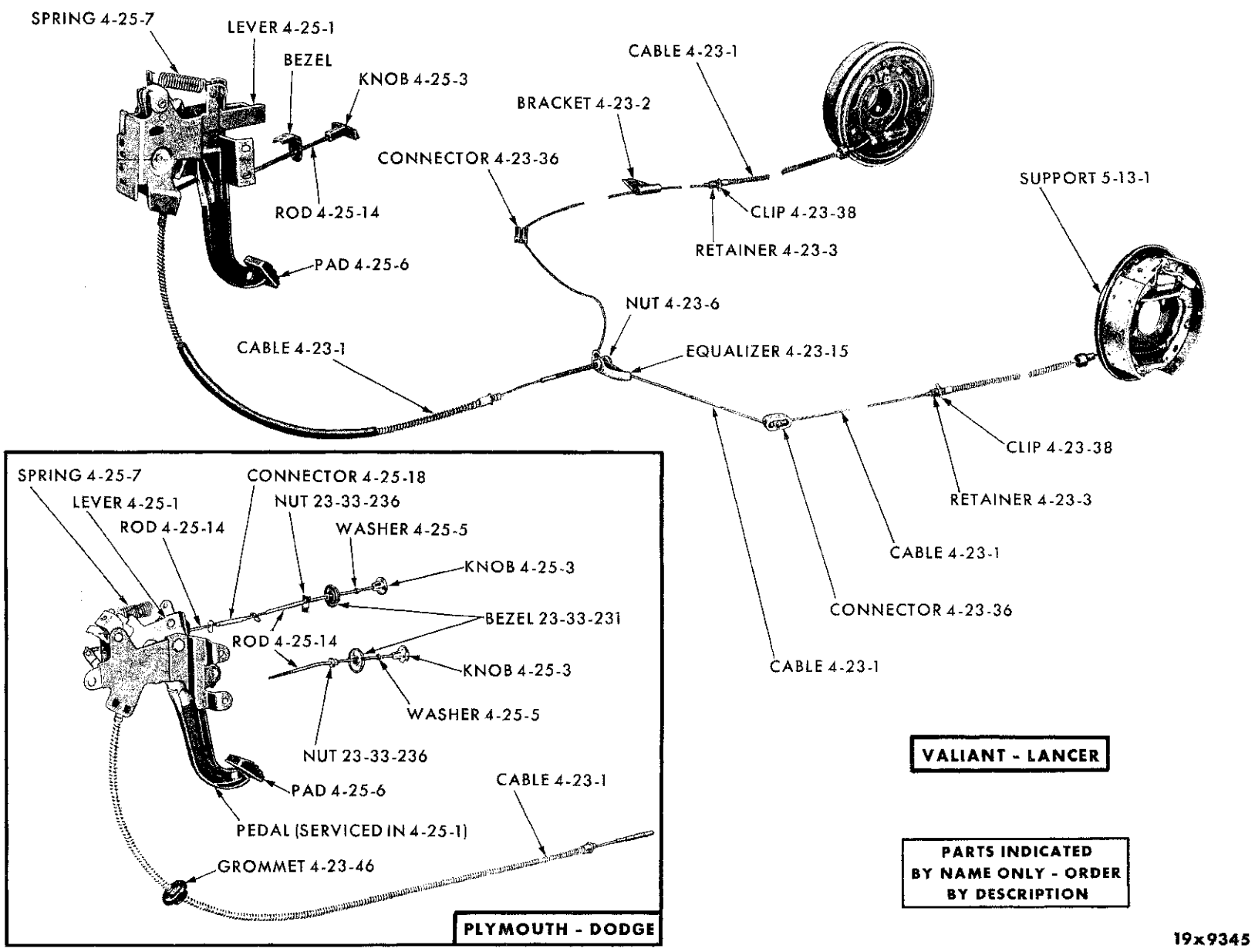

PARKING BRAKE SYSTEM - PLYMOUTH SP1-2, DODGE SD1-2, VALIANT SV1 AND LANCER SL1

MyMopar.com

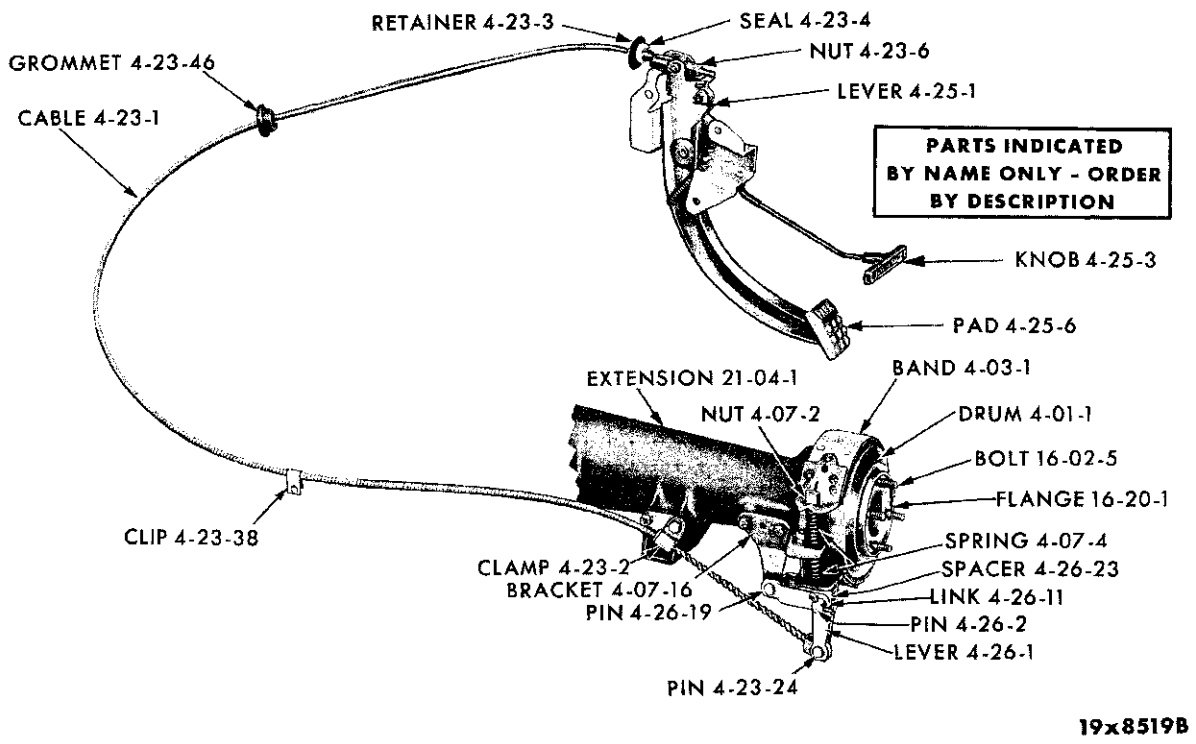

PARKING BRAKE SYSTEM - DODGE SD3 AND CHRYSLER SC1-2-3 (STANDARD TRANSMISSION)

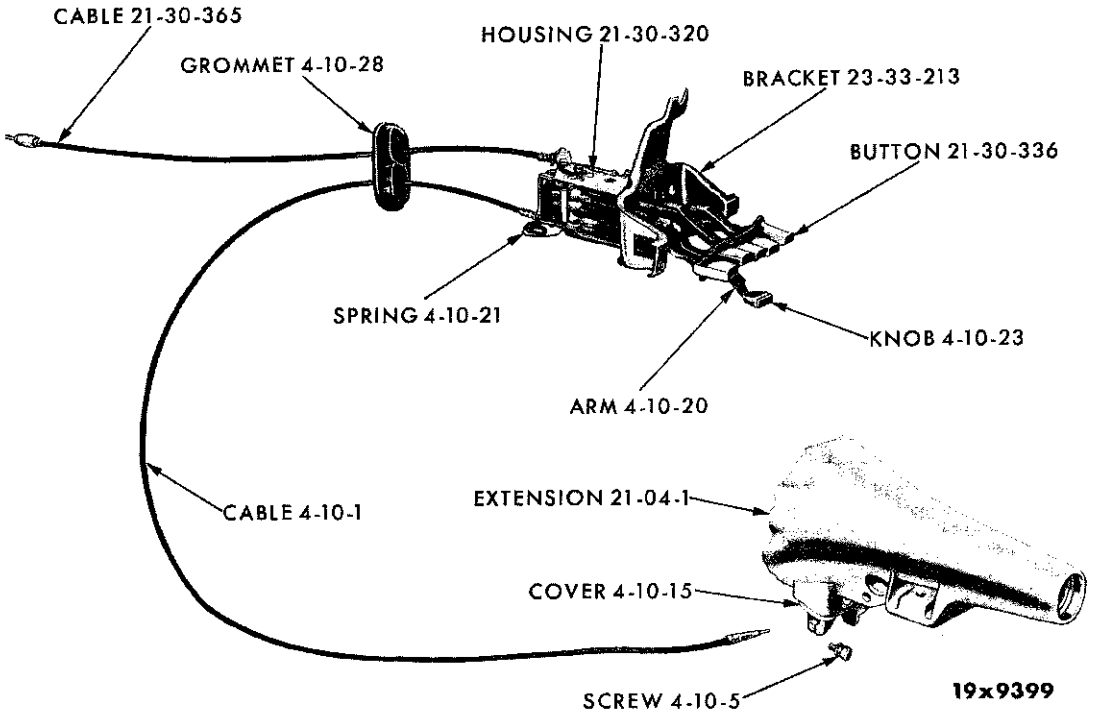

TRANSMISSION PARKING LOCK SYSTEM

MyMopar.com

CODE	PART NAME AND DESCRIPTION	CYL.	PER CAR	VALIANT LANCER	PLYMOUTH DODGE	CHRYSLER IMPERIAL
4-01-0	**PARKING BRAKE DRUM**					
4-01-1	DRUM, w/Std. Trans., SD3, SC1, SC2	8	1	---- ---	*2124 682	*2124 682
	w/Auto. Trans., SD3	8	1	---- ---	*1949 579	*1949 579
4-01-2	BOLT, w/Auto. Trans., SD3	8	4	---- ---	*1946 283	*1946 283
	w/Std. Trans., SC1, SC2	8	4	---- ---	---- ---	1326 773
4-03-0	**PARKING BRAKE BAND OR SHOE**					
4-03-1	BAND, w/LINING, w/Std. Trans., SD3, SC1, SC2	8	1	---- ---	* 863 146	* 863 146
	SHOE, w/LINING, w/Auto. Trans., SD3		2	---- ---	*2122 213	*2122 213
4-03-5	LINING PACKAGE, w/Std. Trans., SD3, SC1, SC2	8	1	---- ---	*1843 179	*1843 179
4-03-8	SHOE, w/Auto. Trans., SD3	8	2	---- ---	*2122 214	*2122 214
4-03-11	SPRING, Shoe Return, w/Auto. Trans., SD3	8	1	---- ---	*1403 611	*1403 611
4-06-0	**PARKING BRAKE SHOE ANCHOR**					
4-06-1	ANCHOR, w/Auto. Trans., SD3	8	1	---- ---	*1488 884	*1488 884
4-06-3	SCREW, Anchor, w/Std. Trans., SD3, SC1, SC2	8	1	---- ---	* 665 454	* 665 454
4-06-6	WASHER, Anchor, w/Auto. Trans., SD3	8	1	---- ---	*600 983	* 600 983
4-06-7	GUIDE, Shoe, w/Auto. Trans., SD3	8	2	---- ---	*1403 574	*1403 574
4-06-11	SPRING, Anchor, w/Std. Trans., SD3, SC1, SC2	8	1	---- ---	* 855 274	* 855 274
4-07-0	**PARKING BRAKE ADJUSTER**					
4-07-1	BOLT, Adjusting, w/Std. Trans., SD3, SC1, SC2	8	1	---- ---	*1325 701	*1325 701
	SCREW, Shoe Adjusting, w/Auto. Trans., SD3	8	1	---- ---	*1314 478	*1314 478
4-07-2	NUT, Adjusting Bolt, w/Std. Trans., SD3, SC1, SC2	8	1	---- ---	* 852 429	* 852 429
	Shoe Adjusting Bolt, w/Auto. Trans., SD3	8	1	---- ---	*1314 477	*1314 477
4-07-3	COVER, Adjusting Screw, w/Auto. Trans., SD3	8	1	---- ---	*1317 858	*1317 858
4-07-4	SPRING, Release, Upper, w/Std. Trans., SD3, SC1, SC2	8	1	---- ---	* 694 773	* 694 773
	Lower, w/Std. Trans., SD3, SC1, SC2	8	1	---- --	* 388 302	* 388 302
4-07-16	BRACKET, Adjusting Bolt, w/Std. Trans., SD3, SC1, SC2	8	1	---- ---	* 853 876	* 853 876
4-07-23	SPRING, Shoe Guide and Grease Shield, w/Auto. Trans., SD3	8	1	---- ---	*1530 775	*1530 775
4-07-28	SLEEVE, Shoe Adjusting, w/Auto Trans., SD3	8	1	---- ---	*1314 476	*1314 476
4-08-0	**PARKING BRAKE LEVER - (HAND OPERATED)**					
4-08-1	LEVER		1	---- ---	2265 313	
4-08-3	BRACKET, Mounting		1	---- ---	2401 302	
4-08-8	PIN, Handle Stop		1	---- ---	*1405 532	
4-08-25	SPRING, Handle Return		1	---- ---	1405 523	
4-08-26	ANCHOR, Lever Return Spring		1	---- ---	2265 324	
4-08-34	HINGE, Lever		1	---- ---	2265 322	
4-08-35	PIN, Hinge		1	---- ---	1732 198	
4-08-36	RETAINER, Hinge Pin		1	---- ---	1829 817	
4-10-0	**TRANSMISSION PARKING LOCK**					
4-10-1	CABLE, SP1, SP2		1	2401 291	2401 291	
	SD1, SD2		1	---- ---	2401 292	

★ Indicates use as required. Numerals in parentheses ( ) refer to notes. Printed in U.S.A.
⊟ Indicates parts not listed in any previous parts book. Prices and specifications subject to change without notice.
* Indicates change or addition. May 1, 1962 Supersedes Nov. 30, 1961.

MyMopar.com

CODE	PART NAME AND DESCRIPTION	CYL.	PER CAR	VALIANT LANCER	PLYMOUTH DODGE	CHRYSLER IMPERIAL
4-10-0	**TRANSMISSION PARKING LOCK - Cont'd**					
4-10-2	ADAPTER		1	1942 199	1942 199	
4-10-3	SPRING, Cable Adapter		1	1673 184	1673 184	
	Cable Actuator		1	1942 011	1942 011	
4-10-4	WASHER, Cable Adapter		1	1942 012	1942 012	
4-10-5	SCREW, Cable Clamp		1	2124 637	2124 637	
	NUT		1	* 120 367	* 120 637	
	LOCK WASHER		1	* 120 380	* 120 380	
4-10-7	LEVER, Sprag Operating		1	2124 589	2124 589	
4-10-8	SHAFT, Operating Lever	6	1	1942 544	1942 544	
		8	1	---- ---	1942 163	
4-10-9	SPACER, Operating Lever		1	2124 588	2124 588	
4-10-10	SPRAG		1	1942 000	1942 000	
4-10-11	SPRING, Sprag		1	1942 161	1942 161	
4-10-12	BUSHING, Sprag		1	1942 162	1942 162	
4-10-15	COVER, UP TO		1	*1942 164 (1)	*1942 164 (1)	
	AFTER		1	*2400 062 (1)	*2400 062 (1)	
4-10-16	GASKET, Cover, UP TO		1	*2298 548 (1)	*2298 548 (1)	
	AFTER		1	*2205 207 (1)	*2205 207 (1)	
4-10-17	ROLLER		1	1942 005	1942 005	
4-10-19	BEARING, Roller Needle		22	1942 006	1942 006	
4-10-20	LEVER, Sprag Control		1	2208 169	2208 169	
	ARM, Sprag Control Lever, SP1, SP2		1	2401 294	2260 855	
	SD1, SD2		1	---- ---	⊟2401 296	
4-10-21	SPRING, Control Lever		1	2123 248	2123 248	
4-10-22	NUT, Control Lever, w/WASHER		1	6023 118	6023 118	
	Control Lever Stud, w/WASHER		2	6022 582	6022 582	
4-10-23	KNOB, Control Lever Arm, SV1, SL1	6	1	2258 495		
	SP1, SP2		1	---- ---	2204 256	
	SD1, SD2		1	---- ---	2258 884	
4-10-24	RIVET, Roller Shaft		1	2124 648	2124 648	
4-10-27	SEAL, Control Cable		1	1536 268	1536 268	
4-10-28	GROMMET, Control Cable Dash		1	2265 189	*2265 190	
4-13-0	**PARKING BRAKE LEVER PAWL**					
4-13-6	PIN, Pawl Pivot, Hand Operated		2	---- ---	1406 526	
4-13-10	SPRING, Pawl, Hand Operated		2	---- ---	1406 522	
4-19-0	**PARKING BRAKE LEVER RETURN SPRING**					
4-19-1	SPRING, Hand Operated		1	---- ---	1946 446	

NOTE 1: SV1, SL1, SP1, SD1, Trans. No. 523 930
SP2, SD2, Trans. No. 118991

★ Indicates use as required. Numerals in parentheses ( ) refer to notes. Printed in U.S.A.
⊟ Indicates parts not listed in any previous parts book. Prices and specifications subject to change without notice.
May 1, 1962 Supersedes Nov. 30, 1961. * Indicates change or addition.

MyMopar.com

CODE	PART NAME AND DESCRIPTION	CYL.	PER CAR	VALIANT LANCER	PLYMOUTH DODGE	CHRYSLER IMPERIAL
4-23-0	**PARKING BRAKE CABLE**					
4-23-1	CABLE, Front, Hand Operated, SP1, SP2, SD1, SD2		1	---- ---	2401 304	
	Foot Operated, SP1, SP2, SD1, SD2		1	2071 134	2401 308	
	w/EQUALIZER, SP1, SP2, SD1, SD2		1	2071 101	2260 210	
	Rear, SP1, SP2, SD1, SD2		2	2071 135	2260 212	
	w/Std. Trans., SD3	8	1	---- ---	2401 347	
	w/Auto. Trans., SD3	8	1	---- ---	2401 345	
	w/Std. Trans., SC1, SC2	8	1	---- ---	---- ---	*2401 347
	w/Auto. Trans., SC1, SC2, SC3	8	1	---- ---	---- ---	*2401 345
	w/Auto. Trans., SY1	8	1	---- ---	---- ---	1829 790
4-23-2	BRACKET, Cable Guide, Rear	6	2	2259 028		
	w/413 cu. in. Engine	8	2	---- ---	*2259 028	
	Cable Guide, Front		2	---- ---	2254 785	
	Cable Clamp, w/Std. Trans., SD3, SC1, SC2	8	1	---- ---	1829 816	1829 816
	PLATE, Accelerator Reinforcement and Cable Guide		1	---- ---	2255 583	
4-23-3	RETAINER, Cable		★	2071 132	1946 468	
		8	1	---- ---	---- ---	1946 468
4-23-4	SEAL, Cable on Floor Pan	6	1	2259 118		
	On Dash Panel, SD3	8	1	---- ---	1946 415	1946 415
4-23-6	NUT, Cable Adjusting Lock, SD1, SD2		1	2073 205	2073 205	
	SD3		1	---- ---	1946 416	1946 416
4-23-7	SUPPORT, on Rear Side Rail		2	2251 398	2251 398	
4-23-15	EQUALIZER, Cable		1	2073 134	2073 134	
4-23-24	PIN, Lower Clevis, w/Std. Trans., SD3, SC1, SC2	8	1	---- ---	608 240	608 240
	Upper, Hand Operated		1	---- ---	2265 269	
4-23-28	CLAMP, Cable, Hand Operated		1	---- ---	2401 303	
4-23-36	CONNECTOR, Cable		2	2071 094	2071 094	
4-23-38	CLIP, Cable, to Support, Rear		2	2401 300	2401 300	
	Front		1	---- ---	2265 320	
	To Fender Shield, SD3,	8	1	---- ---	6006 120	6006 120
4-23-46	GROMMET, Cable on Dash Panel, SY1		1	---- ---	1370 460	1370 460
4-23-50	BUSHING, Cable, w/Auto. Trans., SD3, SC1, SC2, SC3	8	1	---- ---	1943 828	1943 828
	SY1	8	1	---- ---	---- ---	1406 964
4-23-51	WASHER, Cable, Inner, w/Auto. Trans., SD3, SC1, SC2, SC3	8	1	---- ---	1943 833	1943 833
	Inner, SY1	8	1	---- ---	---- ---	1406 975
	Outer, SY1	8	1	---- ---	---- ---	1406 976
4-25-0	**PARKING BRAKE LEVER (FOOT OPERATED)**					
4-25-1	LEVER, SP1, SP2, SD1, SD2		1	2265 259	*2401 770	
	SD3, SC1, SC2, SC3	8	1	---- ---	2275 738	2275 738
	SY1	8	1	---- ---	---- ---	2071 098
4-25-2	BRACKET, Mounting, on Inst. Panel, SY1	8	1	---- ---	---- ---	2080 568
	BOLT, w/WASHER, to Cowl, SD3, SC1, SC2, SC3		3	---- ---	6022 335	6022 335
4-25-3	KNOB, Release, SV1, SL1	6	1	2071 131		
	SP1, SP2		1	---- ---	2265 281	
	SD1, SD2		1	---- ---	2265 282	
	SD3, SC1, SC2, SC3	8	1	---- ---	2200 642	2200 642
	SY1	8	1	---- ---	---- ---	2208 009

★ Indicates use as required. Numerals in parentheses ( ) refer to notes. Printed in U.S.A.
⊟ Indicates parts not listed in any previous parts book. Prices and specifications subject to change without notice.
* Indicates change or addition. March 8, 1963 Supersedes May 1, 1962.

MyMopar.com

CODE	PART NAME AND DESCRIPTION	CYL.	PER CAR	VALIANT LANCER	PLYMOUTH DODGE	CHRYSLER IMPERIAL
4-25-0	**PARKING BRAKE LEVER (FOOT OPERATED) - Cont'd**					
4-25-4	SPRING, Release Arm Return for 2265 252					
	Lever, SD3, SC1, SC2, SC3	8	1	---- ---	*2207 988	*2207 988
	For 2071 098 Lever, SY1	8	1	---- ---	---- ---	2201 470
	Pawl, for 2265 252 Lever, SD3, SC1, SC2, SC3	8	1	---- ---	*2208 017	*2208 017
4-25-5	WASHER, Release Knob		1	---- ---	2265 296	
4-25-6	PAD, Pedal, SC1, SC2, SC3		1	1946 401	1946 401	1946 401
	SY1	8	1	---- ---	---- ---	1946 434
4-25-7	SPRING, Pedal Return, SD1, SD2		1	*2071 114	*2265 314	
	For 2265 252 Lever, SD3, SC1, SC2, SC3	8	1	---- ---	*2208 022	*2208 022
	For 2071 098 Lever, SY1	8	1	---- ---	---- ---	2208 043
4-25-8	NUT, Pedal Pivot or Release Arm, SY1		1	---- ---	1927 232	6023 035
4-25-9	BUMPER, Pedal Stop		1	---- ---	2071 150	
4-25-10	BUSHING, Pedal Pivot, SY1	8	1	---- ---	---- ---	2401 301
4-25-14	ROD, Release Arm		1	2265 277	2265 315	
	Pedal Release		1	---- ---	2071 154	
4-25-15	CLIP, Release Rod		1	667 774	6008 145	
4-25-17	NUT, Pedal Pivot		1	1927 232	1927 232	
4-25-18	CONNECTOR, Release Arm Rod		1	---- ---	2265 316	
4-25-21	SCREW, Lever Mounting	6	4	2094 890		
	BOLT, Lever Support Bracket		3	---- ---	6022 307	6022 335
4-26-0	**PARKING BRAKE OPERATING LEVER**					
4-26-1	LEVER, Right	6	1	2265 360		
	Left	6	1	2265 361		
	Right, 10" x 2 1/2" Brakes		1	---- ---	2260 830	
	Left, 10" x 2 1/2" Brakes		1	---- ---	2260 831	
	Right, 11" x 2 1/2" Brakes, SD1, SD2		1	---- ---	*2260 800	
	Left, 11" x 2 1/2" Brakes, SD1, SD2		1	---- ---	*2260 801	
	w/Std., Trans., SD3, SC1, SC2	8	2	---- ---	*1636 257	*1636 257
	w/Auto. Trans., SD3	8	1	---- ---	*1315 879	*1315 879
4-26-2	PIN, Clevis, w/Std. Trans., SD3, SC1, SC2	8	1	---- ---	---- ---	* 852 454
4-26-11	LINK, Operating Lever, w/Std. Trans., SD3,					
	SC1, SC2	8	2	---- ---	* 697 814	* 697 814
	w/Auto. Trans., SD3	8	1	---- ---	*1406 677	*1406 677
4-26-16	SCREW, Lever, w/Auto. Trans., SD3	8	1	---- ---	*1317 150	*1317 150
4-26-17	STRUT, Lever	6	2	2072 689		
	10" x 2 1/2" Brakes		2	---- ---	2260 423	
	11" x 2 1/2" Brakes		2	---- ---	2260 557	
4-26-18	SPRING, Strut		2	2072 646	2260 807	
4-26-19	PIN, Lever Link, w/Std. Trans., SD3, SC1, SC2	8	1	---- ---	* 652 970	* 652 970
4-26-23	SPACER, Lever, w/Std. Trans., SD3, SC1, SC2	8	1	---- ---	*1314 013	*1314 013
4-26-26	WASHER, Lever Pin		2	2072 643	2072 643	
4-26-27	LOCK, Lever Pin Washer		2	2072 644	2072 644	
4-26-28	NUT, Operating Lever Screw, w/Auto. Trans.,					
	SD3	8	1	---- ---	*2208 008	*2208 008

MyMopar.com

CODE	PART NAME AND DESCRIPTION	CYL.	PER CAR	VALIANT LANCER	PLYMOUTH DODGE	CHRYSLER IMPERIAL
4-29-0	**PARKING BRAKE SUPPORT**					
4-29-1	SUPPORT, w/Std. Trans., SD3, SC1, SC2	8	1	---- ---	*1636 259	*1636 259
	w/Auto. Trans., SD3, SC1, SC2, SC3	8	1	---- ---	*1946 445	*1946 445
	SY1	8	1	---- ---	---- ---	1738 221
4-29-13	SHIELD, Grease, w/Auto. Trans., SD3	8	1	---- ---	*1488 901	*1488 901
4-29-15	SLEEVE, Spacer, w/Auto. Trans., SD3	8	1	---- ---	*1488 890	*1488 890
4-29-16	SPACER, Support, w/Auto. Trans., SD3	8	1	---- ---	*1488 889	*1488 889

NOTES

★ Indicates use as required. Numerals in parentheses ( ) refer to notes. Printed in U.S.A.
⊟ Indicates parts not listed in any previous parts book. Prices and specifications subject to change without notice.
* Indicates change or addition.

MyMopar.com

CODE	PART NAME AND DESCRIPTION	CYL.	PER CAR	VALIANT LANCER	PLYMOUTH DODGE	CHRYSLER IMPERIAL

NOTES

MyMopar.com

GROUP 5 - 5 BRAKE-SERVICE

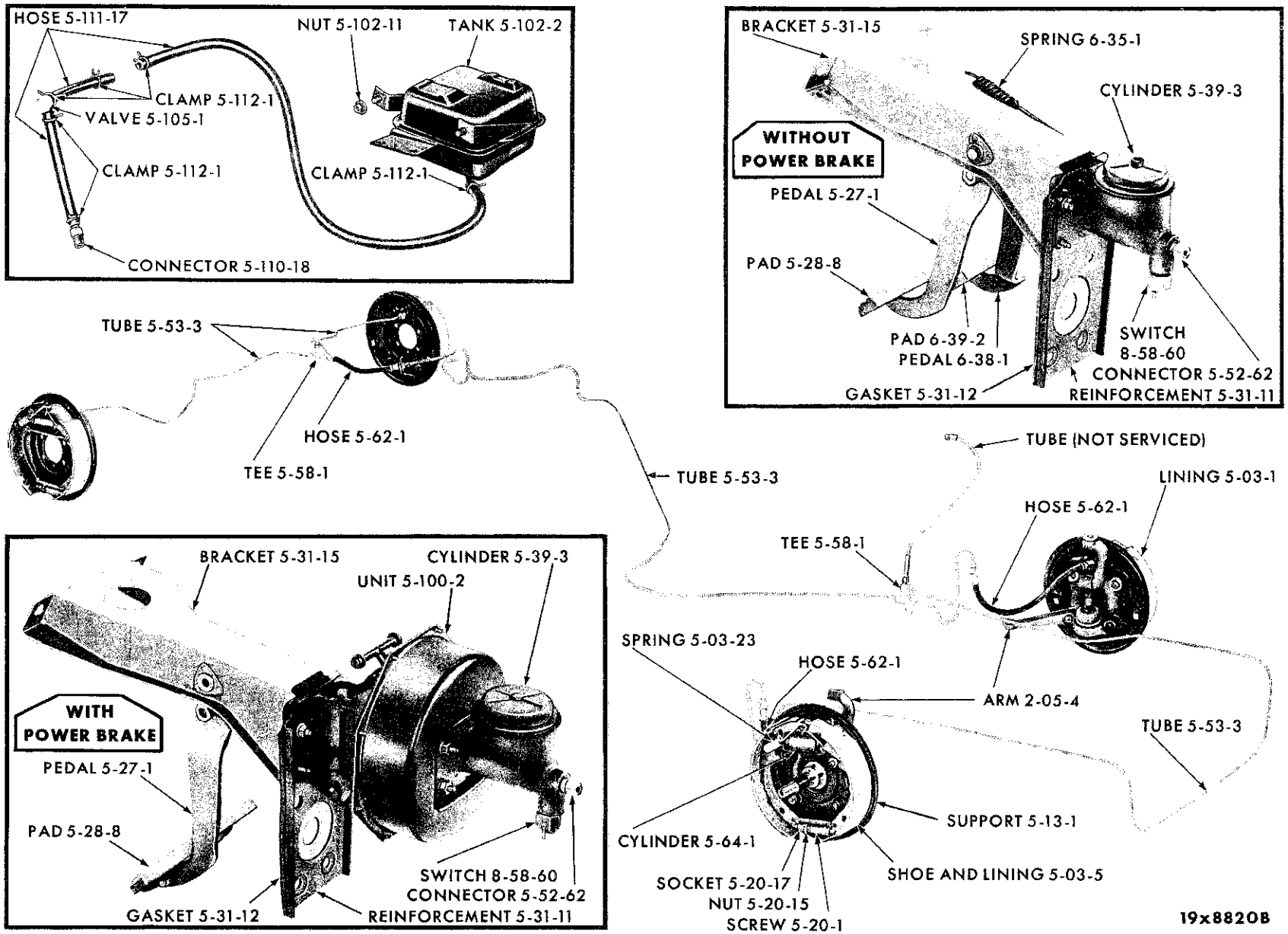

HYDRAULIC BRAKE SYSTEM - VALIANT SV1 AND LANCER SL1

MyMopar.com

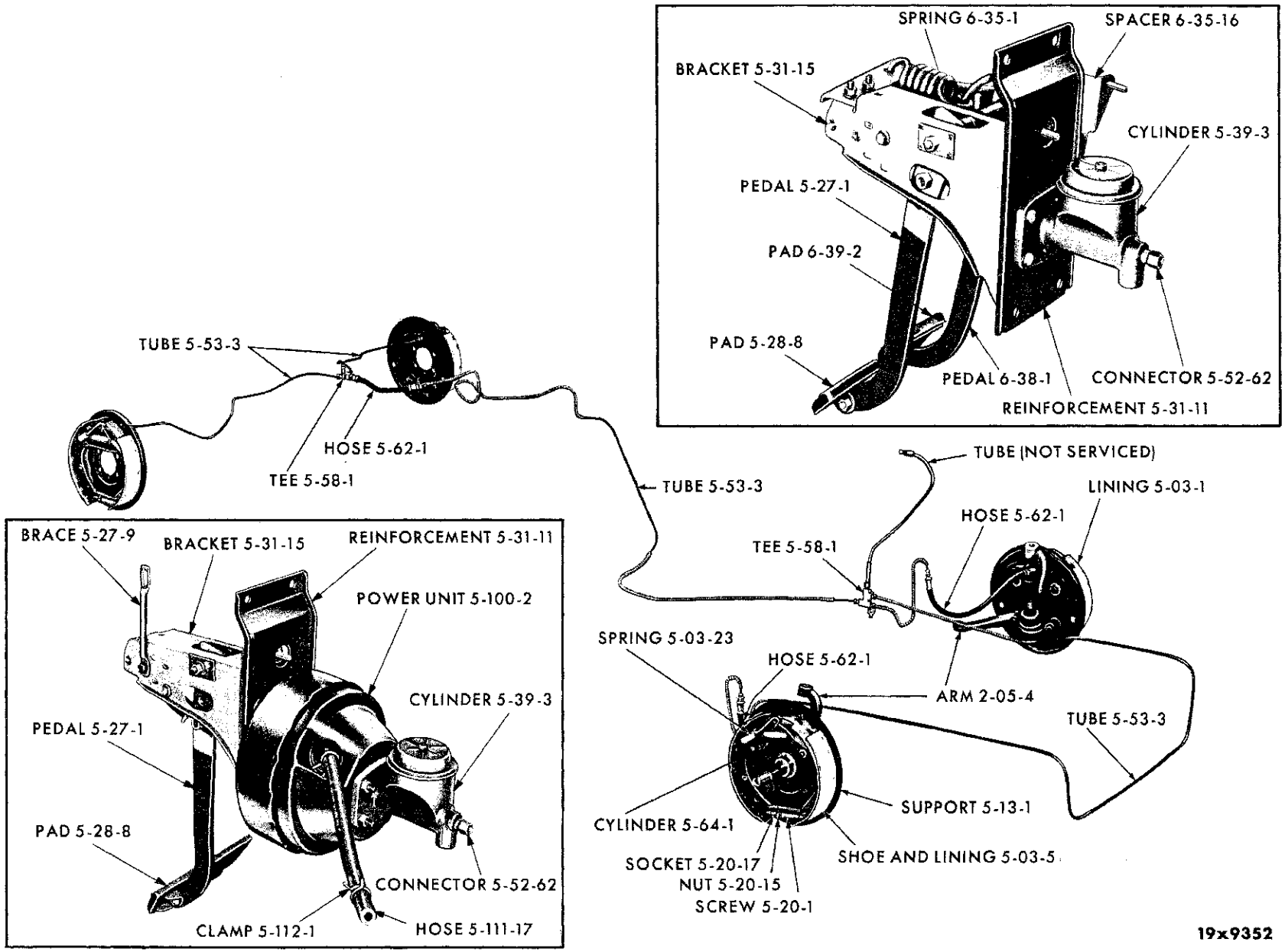

HYDRAULIC BRAKE SYSTEM - PLYMOUTH SP1-2 AND DART SD1-2

MyMopar.com

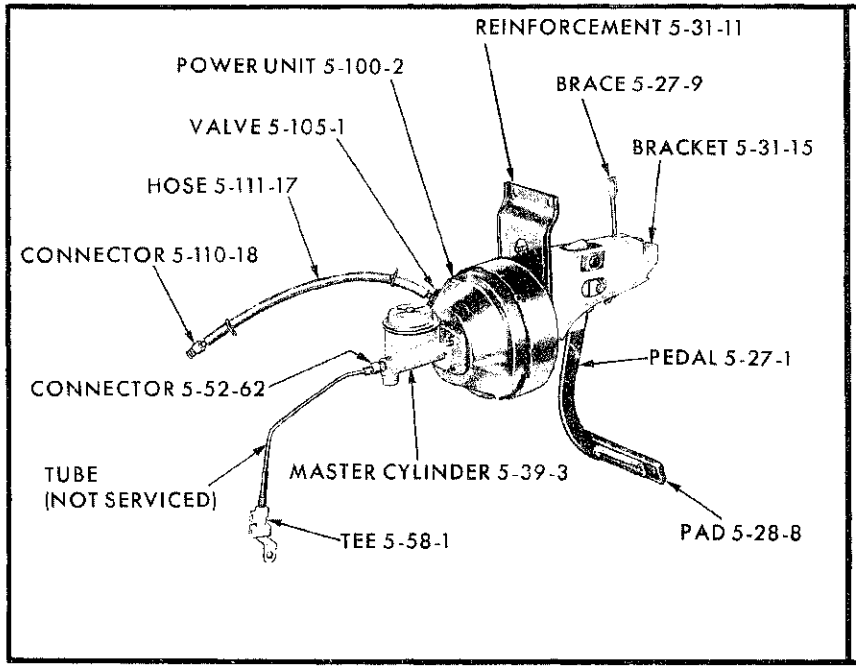

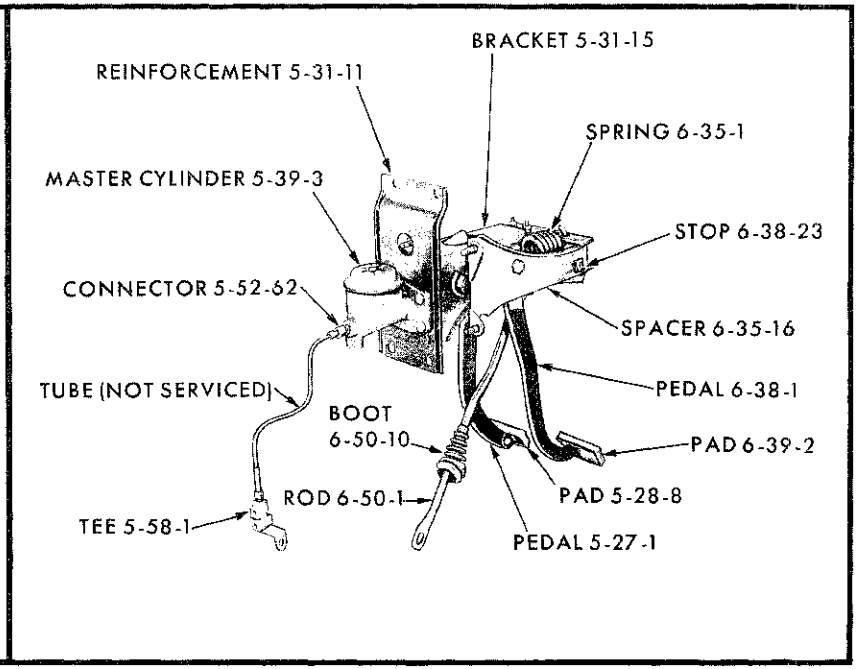

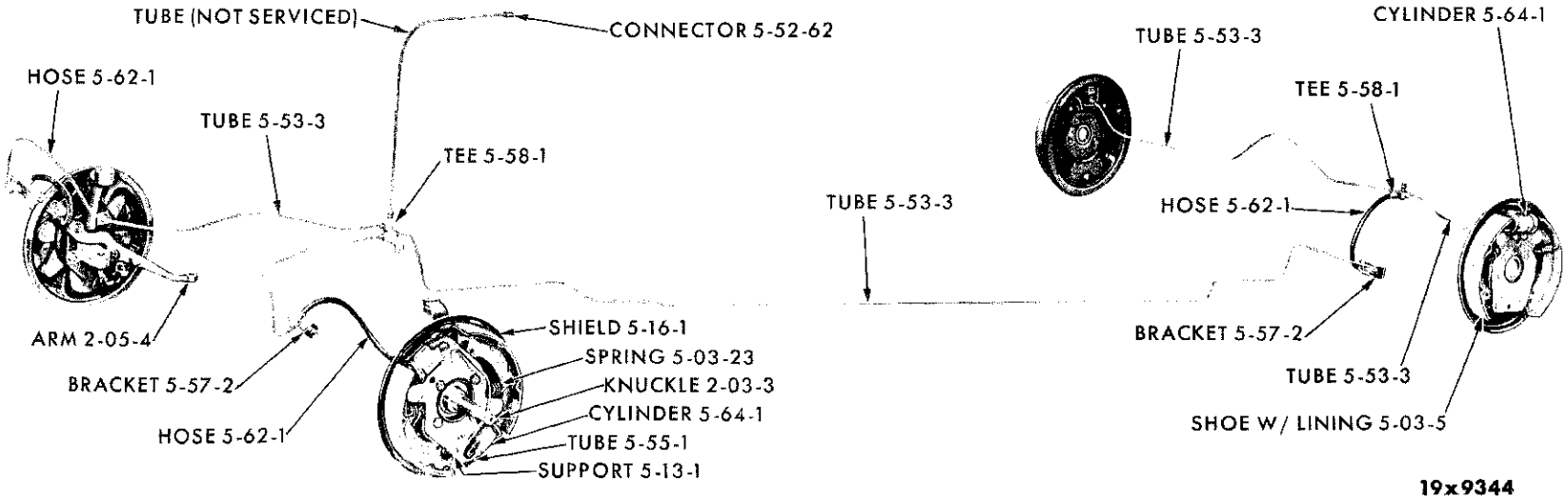

HYDRAULIC BRAKE SYSTEM - DODGE SD3, CHRYSLER SC1-2-3 AND IMPERIAL SY1

MyMopar.com

CODE	PART NAME AND DESCRIPTION	CYL.	PER CAR	VALIANT LANCER	PLYMOUTH DODGE	CHRYSLER IMPERIAL

NOTES

MyMopar.com

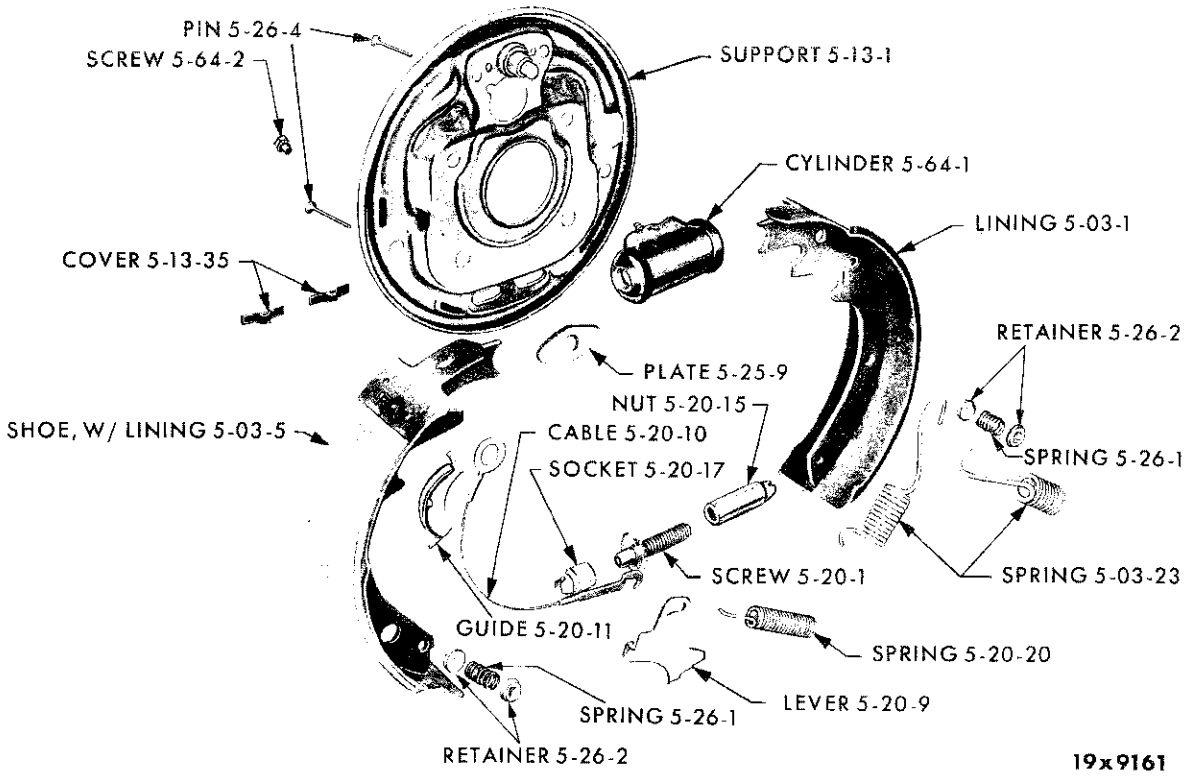

FRONT WHEEL BRAKE - PLYMOUTH SP1-2 AND DODGE SD1-2

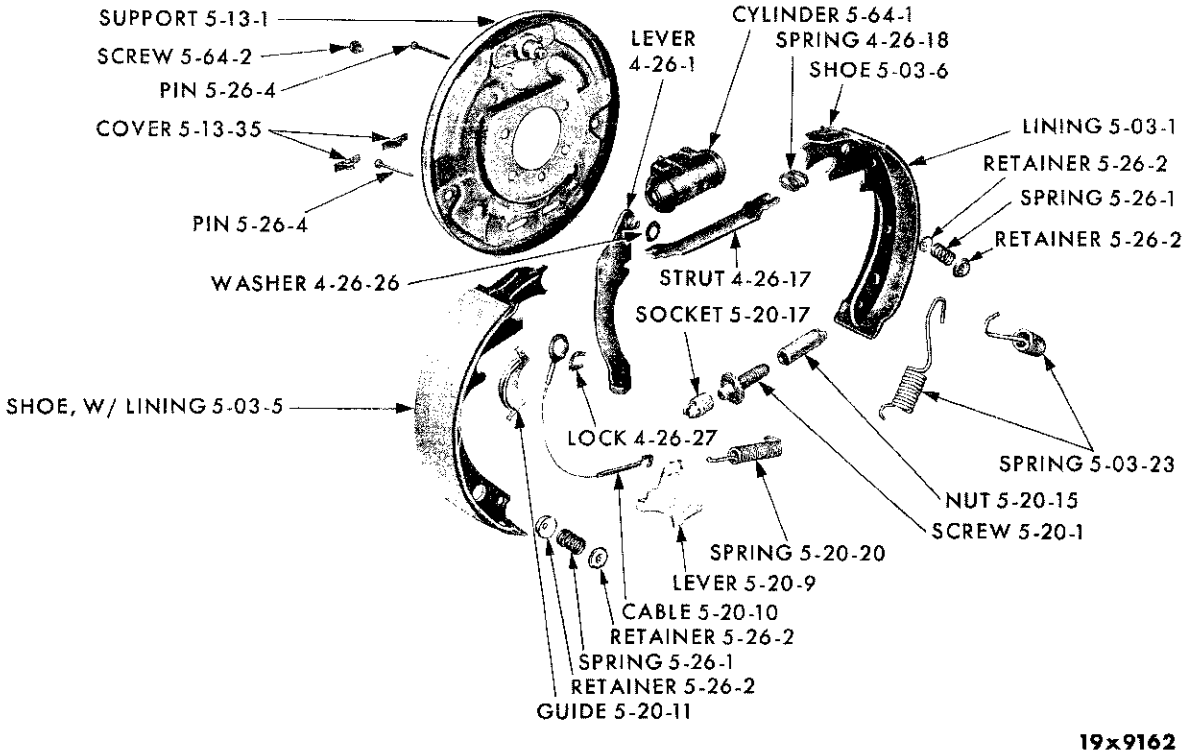

REAR WHEEL BRAKE - PLYMOUTH SP1-2 AND DODGE SD1-2

MyMopar.com

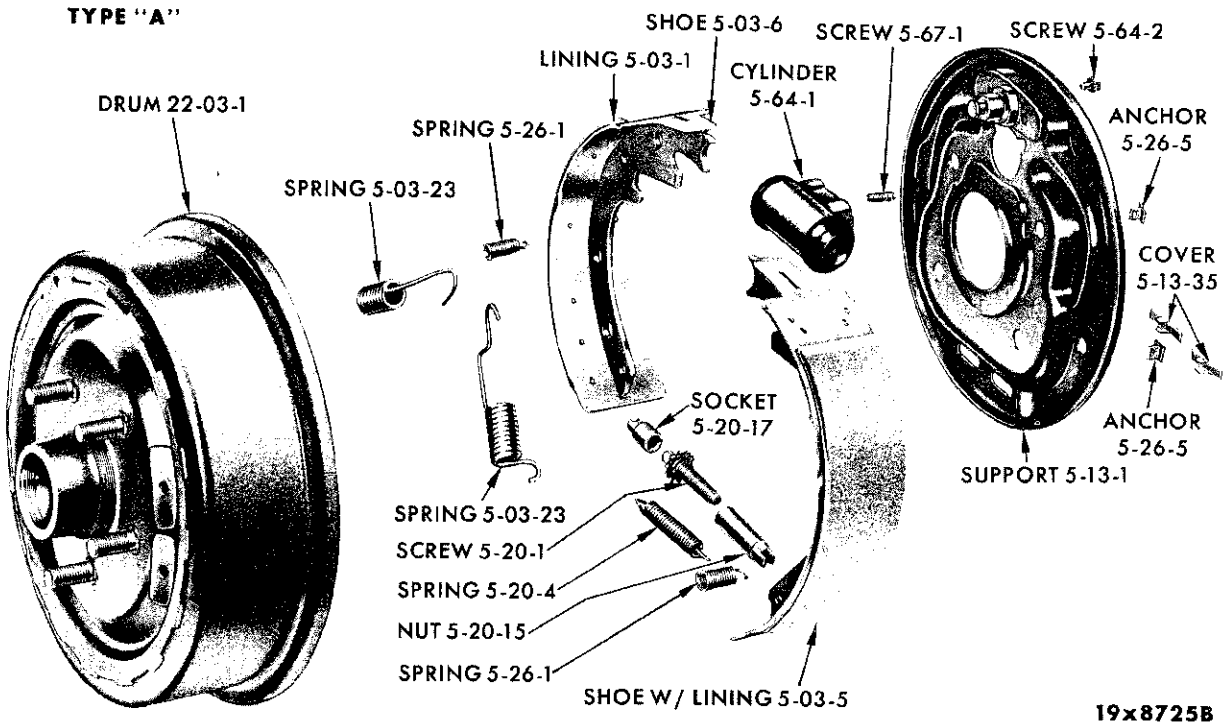

FRONT WHEEL BRAKE - VALIANT SV1 AND LANCER SL1

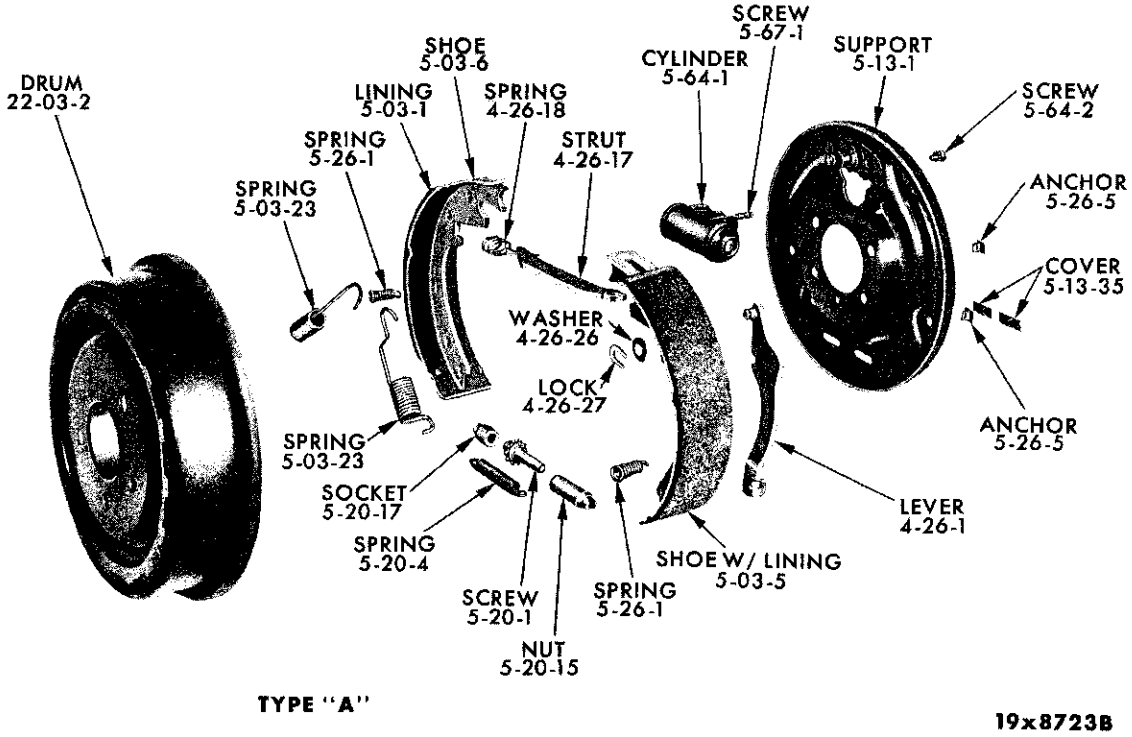

REAR WHEEL BRAKE - VALIANT SV1 AND LANCER SL1

MyMopar.com

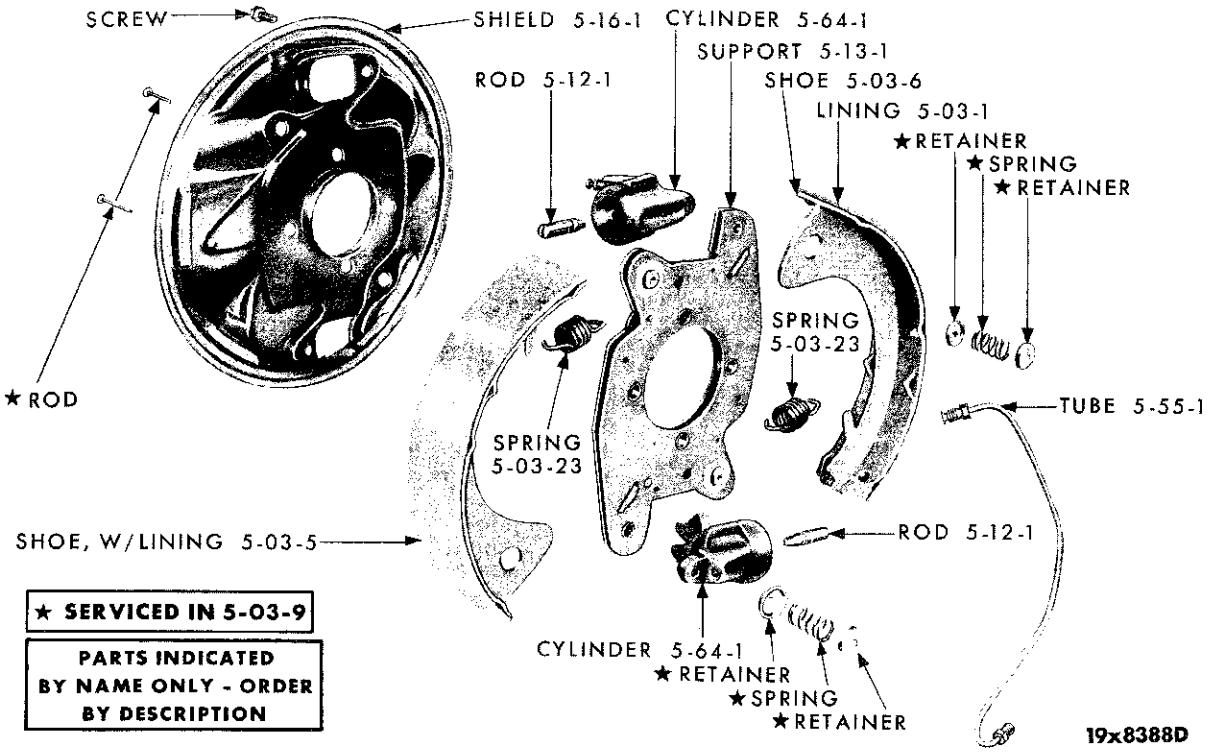

★ SERVICED IN 5-03-9

PARTS INDICATED BY NAME ONLY - ORDER BY DESCRIPTION

FRONT WHEEL BRAKE - DODGE SD3, CHRYSLER SC1-2-3 AND IMPERIAL SY1

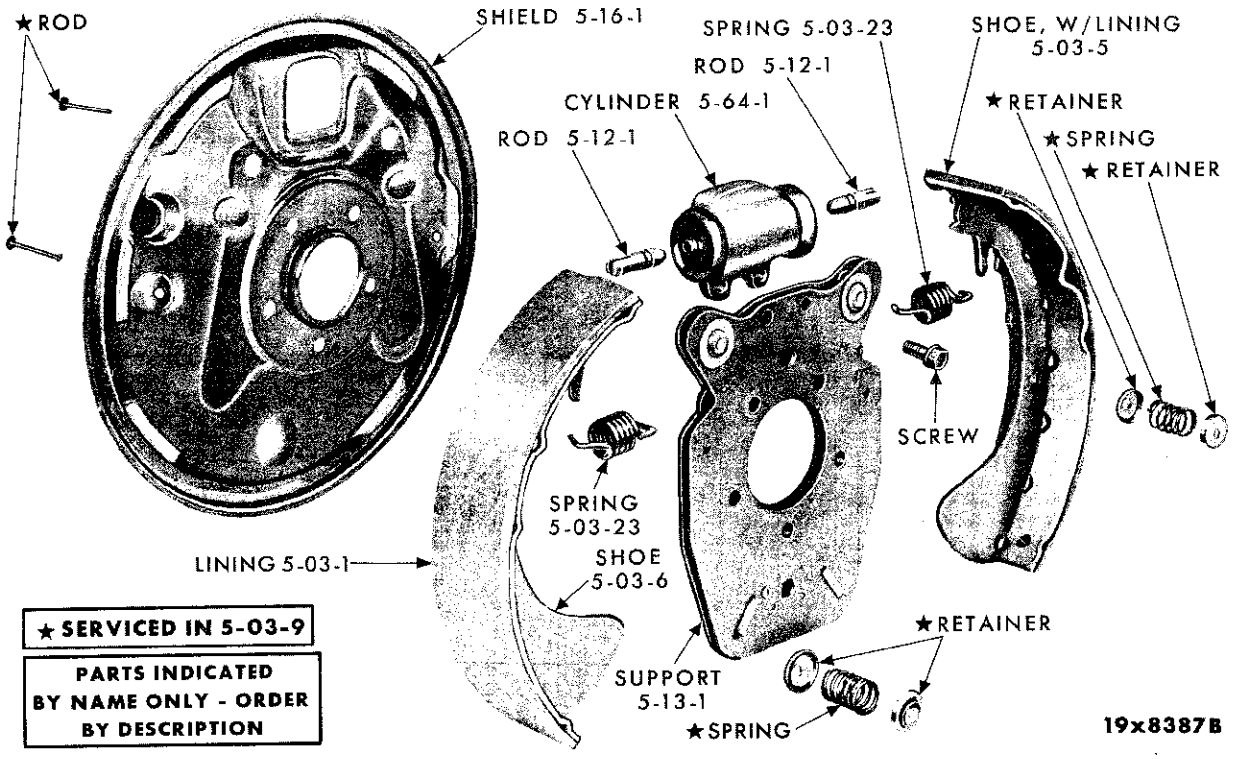

★ SERVICED IN 5-03-9

PARTS INDICATED BY NAME ONLY - ORDER BY DESCRIPTION

REAR WHEEL BRAKE - DODGE SD3, CHRYSLER SC1-2-3 AND IMPERIAL SY1

MyMopar.com

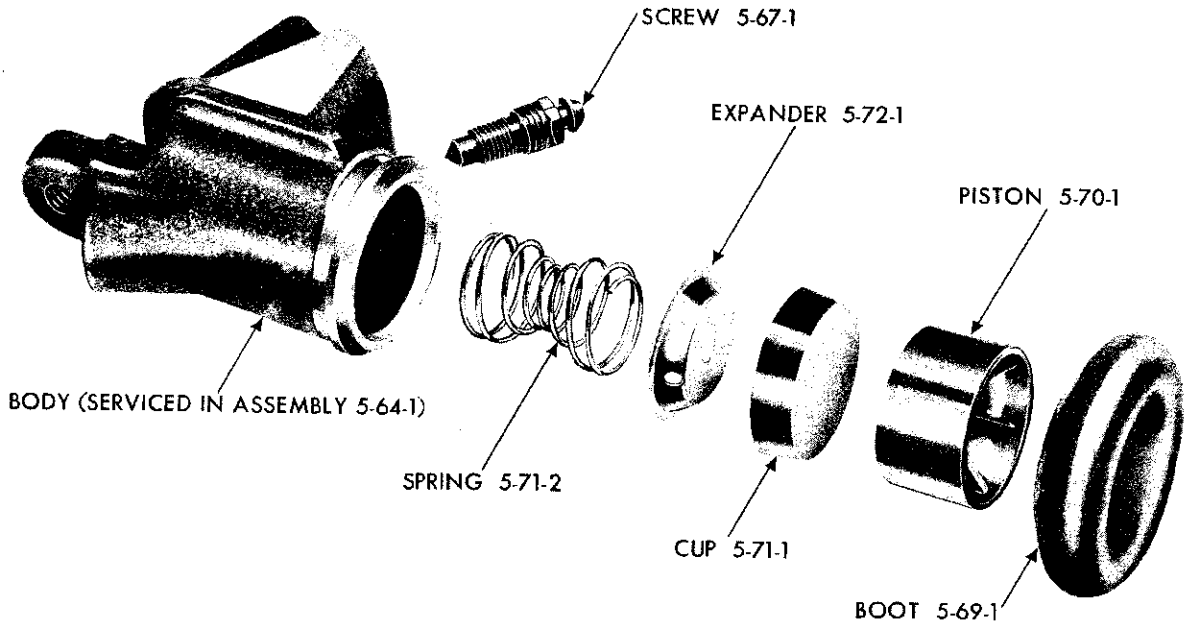

19x6947

FRONT WHEEL CYLINDER - DODGE SD3, CHRYSLER SC1-2-3 AND IMPERIAL SY1

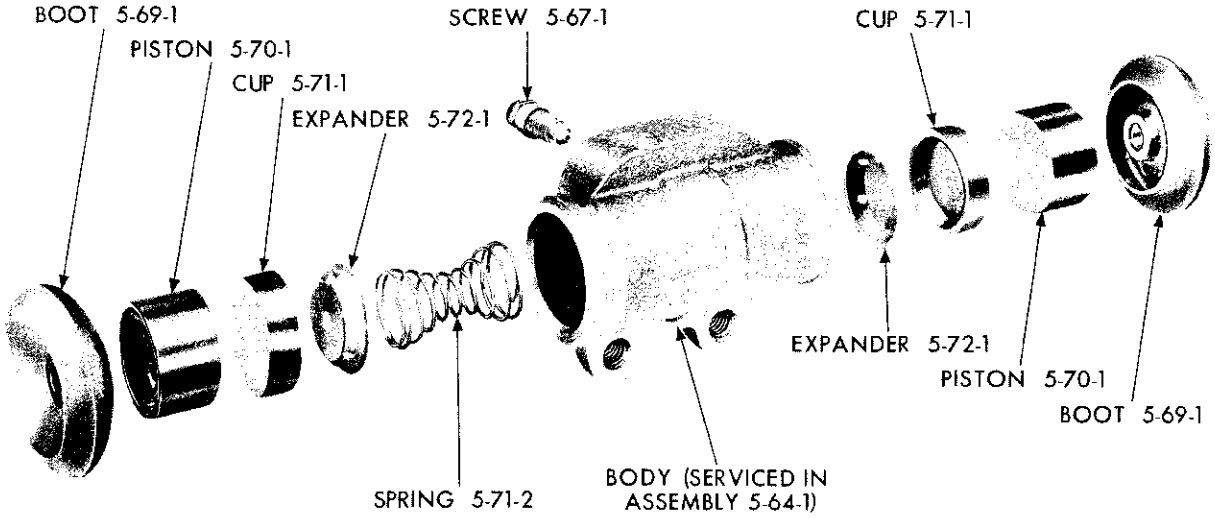

19x6949A

REAR WHEEL CYLINDER - DODGE SD3, CHRYSLER SC1-2-3 AND IMPERIAL SY1

MyMopar.com

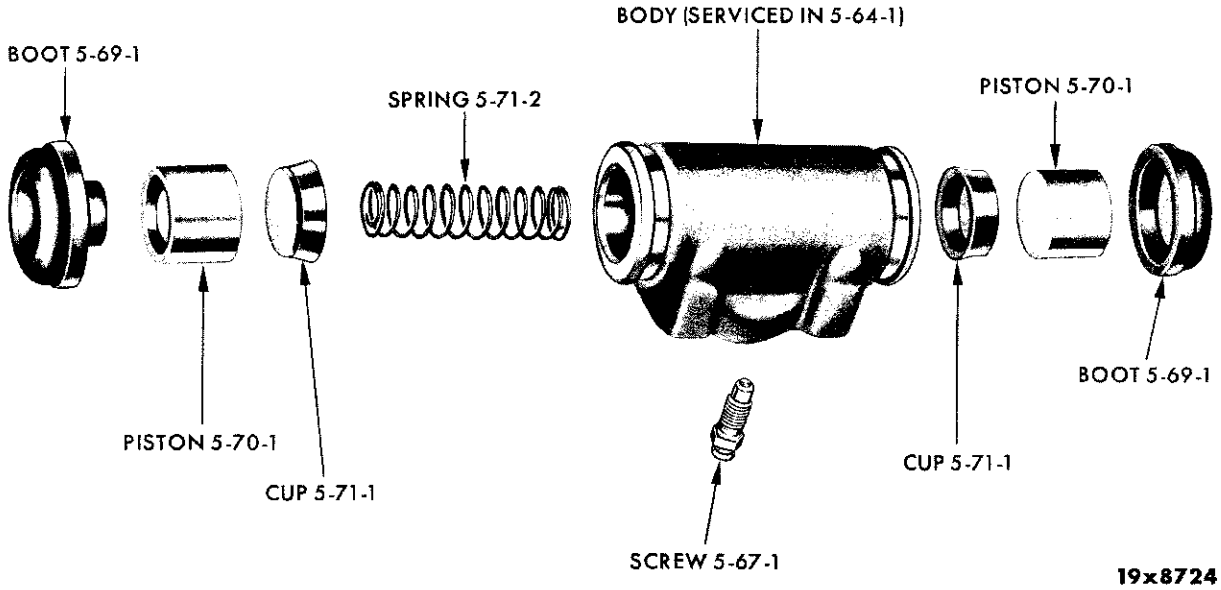

FRONT AND REAR WHEEL CYLINDER - EXCEPT CHRYSLER SC1-2-3 AND IMPERIAL SY1

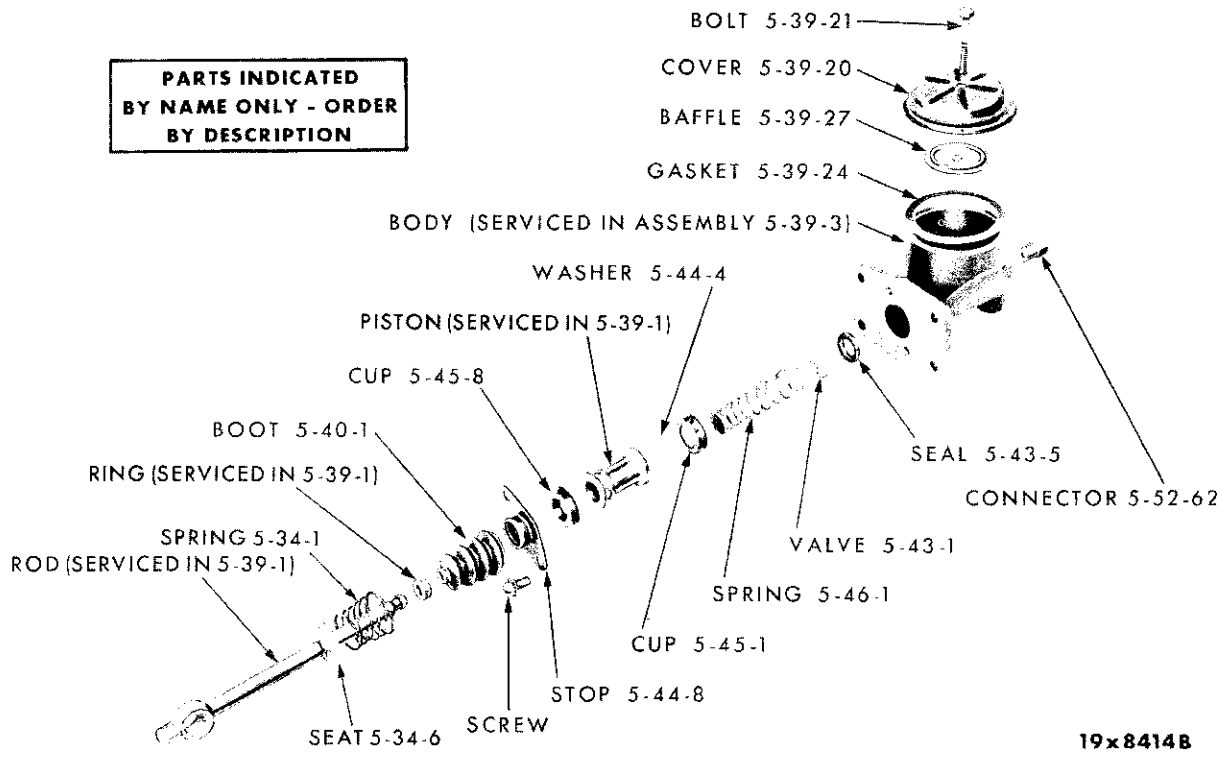

MASTER CYLINDER (WITHOUT POWER BRAKES) - EXCEPT IMPERIAL SY1

MyMopar.com

NOTES

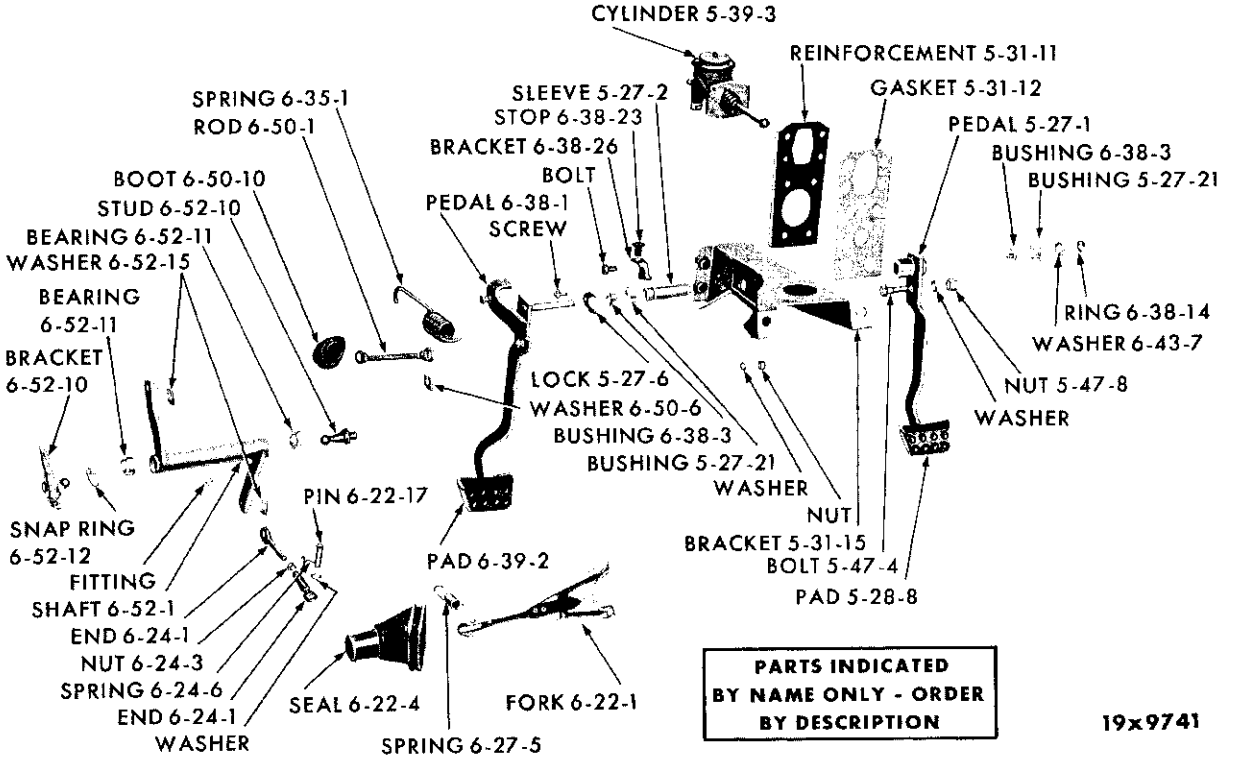

BRAKE AND CLUTCH PEDAL LINKAGE - VALIANT SV1 AND LANCER SL1

MyMopar.com

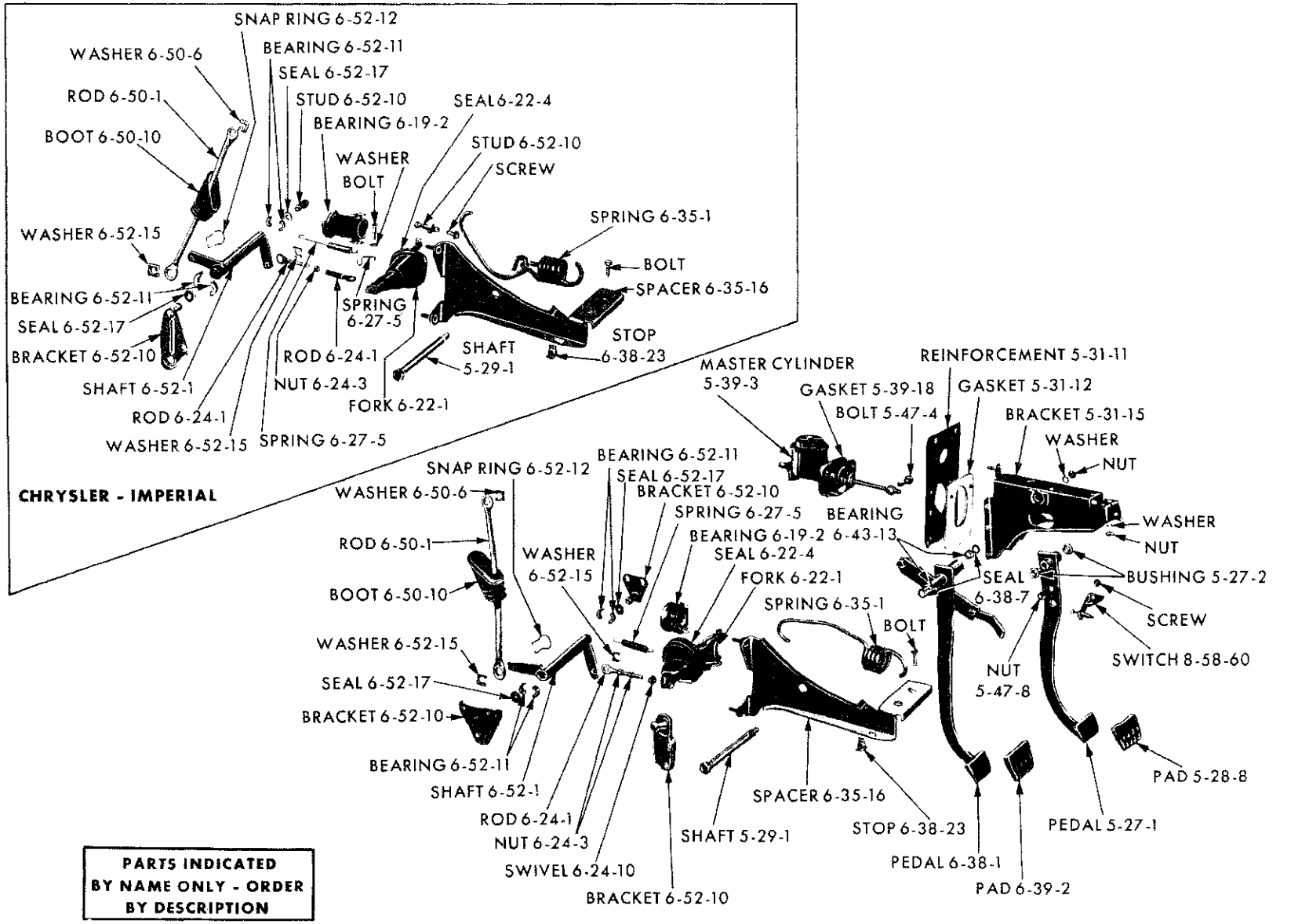

BRAKE AND CLUTCH PEDAL LINKAGE - PLYMOUTH SP1-2, DODGE SD1-2-3, CHRYSLER SC1-2-3 AND IMPERIAL SY1

MyMopar.com

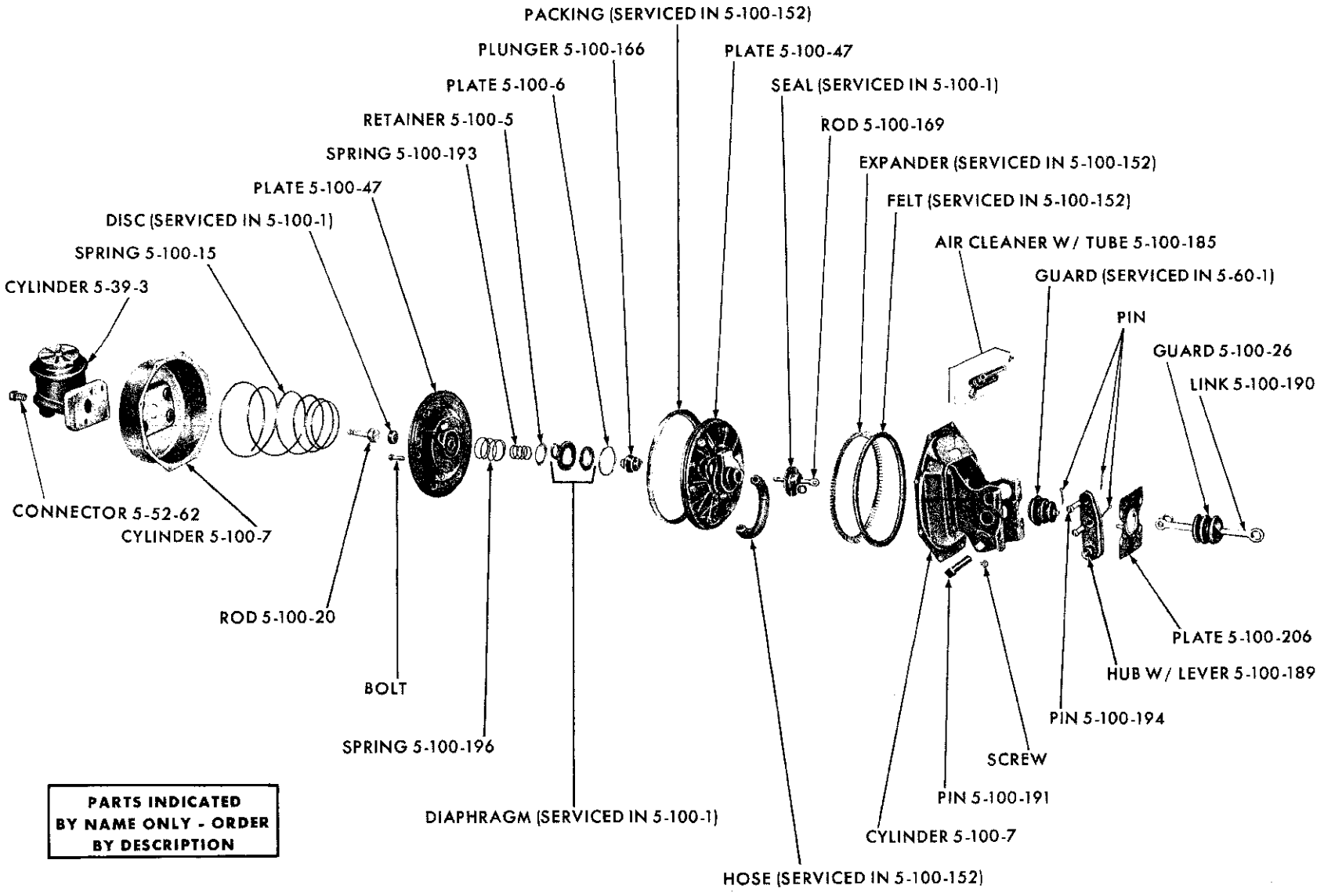

BOOSTER BRAKE (BENDIX) - VALIANT SV1 AND LANCER SL1

MyMopar.com

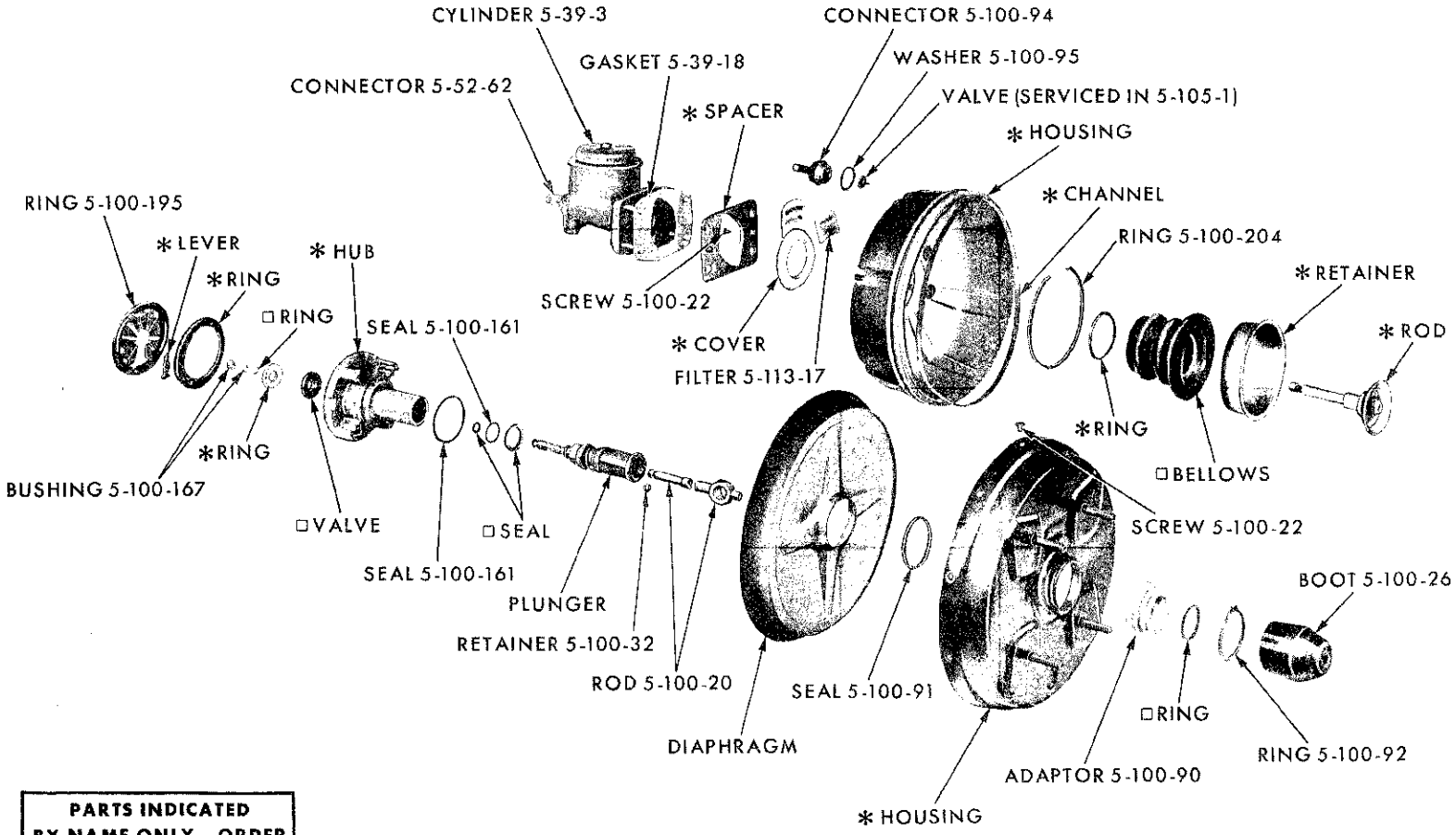

PARTS INDICATED BY NAME ONLY - ORDER BY DESCRIPTION

□ SERVICED IN 5-100-1

*** SERVICED IN 5-100-2**

19x9380

BOOSTER BRAKE CYLINDER (MIDLAND-ROSS TYPE) - PLYMOUTH SP1-2 AND DODGE SD1-2

MyMopar.com

CODE	PART NAME AND DESCRIPTION	PER CAR	VALIANT LANCER	PLYMOUTH DODGE	CHRYSLER IMPERIAL

NOTES

MyMopar.com

CODE	PART NAME AND DESCRIPTION	CYL.	PER CAR	VALIANT LANCER	PLYMOUTH DODGE	CHRYSLER IMPERIAL
5-01-0	**BRAKE FLUID**					
5-01-2	BRAKE FLUID, 12 oz. Can		★	*2421 352	*2421 352	*2421 352
	1 Quart Can		★	1879 270	1879 270	1879 270
	1 Gallon Can		★	1879 271	1879 271	1879 271
	5 Gallon Can		★	1879 272	1879 272	1879 272
	30 Gallon Drum		★	1879 273	1879 273	1879 273
5-03-0	**WHEEL BRAKE SHOE AND LINING**					
5-03-1	LINING PACKAGE, except Taxi	6	1	2298 942		
	Taxi	6	1	2298 943		
	10" Brakes		1	---- ---	2298 842	
	11" Brakes, Taxi		1	---- ---	2421 314	
	11" Brakes, Heavy Duty and Police Cars		1	---- ---	2298 848	
	11" Brakes, SD3, SC1, Except Sub.	8	1	---- ---	2298 543	2298 543
	12" Brakes, SD3, SC1, SC2, SC3	8	1	---- ---	2298 836	2298 836
	12" Brakes, SC2 w/413 cu. in. Engine	8	1	---- ---	---- ---	1879 690
	12" Brakes, SC1 Police Car	8	1	---- ---	---- ---	2240 227
5-03-5	SHOE, w/LINING, Front Wheel, Front Shoe	6	2	2266 294		
	Front Wheel, Rear Shoe, UP TO Type see Note 1	6	2	2266 295		
	Front Wheel, Rear Shoe, AFTER Type see Note 2	6	2	2267 041		
	Rear Wheel, Front Shoe	6	2	2266 296		
	Rear Wheel, Rear Shoe, UP TO Type see Note 1	6	2	2266 297		
	Rear Wheel, Rear Shoe, AFTER Type see Note 2	6	2	2267 043		
	Front and Rear Wheel, Front Shoe, 10" Brakes		4	---- ---	2265 777	
	Front and Rear Wheel, Rear Shoe, 10" Brakes		4	---- ---	2265 781	
	Front Wheel, Front Shoe, 11" Brakes, Taxi		2	---- ---	2401 806	
	Front Wheel, Rear Shoe, 11" Brakes, Taxi		2	---- ---	2401 807	
	Rear Wheel, Front Shoe, 11" Brakes, Taxi		2	---- ---	2401 800	
	Rear Wheel, Rear Shoe, 11" Brakes, Taxi		2	---- ---	2401 801	
	Front Wheel, Front Shoe, 11" Brakes, Heavy Duty and Police Cars		2	---- ---	2401 011	
	Front Wheel, Rear Shoe, 11" Brakes, Heavy Duty and Police Cars		2	---- ---	2401 012	
	Rear Wheel, Front Shoe, 11" Brakes, Heavy Duty and Police Cars		2	---- ---	2401 007	
	Rear Wheel, Rear Shoe, 11" Brakes, Heavy Duty and Police Cars		2	---- ---	2401 008	
	Front and Rear Wheel, 11" Brakes, SD3, SC1, except Sub.	8	8	---- ---	2266 393	2266 393
	Front and Rear Wheel, 12" Brakes, SD3, SC1, SC2, SC3	8	8	---- ---	2200 122	2200 122
	Front and Rear Wheel, 12" Brakes, SC2. w/413 cu. in. Engine	8	8	---- ---	---- ---	2200 118
	Front and Rear Wheel, Front Shoe, 12" Brakes, SY1	8	4	---- ---	---- ---	1857 063
	Front and Rear Wheel, Rear Shoe, 12" Brakes, SY1	8	4	---- ---	---- ---	2200 122
	Front and Rear Wheel, Front Shoe, SC1 Police Car	8	4	---- ---	---- ---	2201 634
	Front and Rear Wheel, Rear Shoe, SC1 Police Car	8	4	---- ---	---- ---	2200 118

NOTE 1: UP TO Type Shoe, w/LINING, Identified by One White Stripe on Side of Lining.

NOTE 2: AFTER Type Shoe, w/LINING, Identified by Two White Stripes on Side of Lining.

★ Indicates use as required. Numerals in parentheses ( ) refer to notes. Printed in U.S.A.
⊟ Indicates parts not listed in any previous parts book. Prices and specifications subject to change without notice.
* Indicates change or addition.

March 8, 1963 Supersedes May 1, 1962.

MyMopar.com

CODE	PART NAME AND DESCRIPTION	CYL.	PER CAR	VALIANT LANCER	PLYMOUTH DODGE	CHRYSLER IMPERIAL
5-03-0	**WHEEL BRAKE SHOE AND LINING - Cont'd**					
5-03-6	SHOE, Front Wheel	6	4	2072 664		
	Rear Wheel	6	4	2072 670		
	Front Wheel, 10" x 2 1/2" Brakes		4	---- ---	2260 812	
	Rear Wheel, 10" x 2 1/2" Brakes		4	---- ---	2260 812	
	Front Wheel, 11" x 3" Brakes		4	---- ---	2260 654	
	Rear Wheel, 11" x 2 1/2" Brakes		4	---- ---	2260 886	
	Front and Rear Wheels, 11" x 2 1/2" Brakes, SD3, SC1, except Sub.	8	8	---- ---	*1943 806	*1943 806
	Front and Rear Wheels, 12" x 2 1/2" Brakes, SD3	8	8	---- ---	*1943 674	*1943 674
5-03-9	DAMPENER PACKAGE, SD3	8	8	---- ---	*2084 257	*2084 257
5-03-23	SPRING, Brake Shoe Return	6	8	2072 719		
	Front Shoe, 10" Brakes		4	---- ---	2267 044	
	Rear Shoe, 10" Brakes		4	---- ---	2260 835	
	11" Brakes, SP1, SP2, SD1, SD2		8	---- ---	*2260 789	
	11" Brakes, SD3, SC1, except Sub.	8	8	---- ---	*2266 881	*2266 881
	12" Brakes, SD3	8	8	---- ---	*2267 066	*2267 066
5-12-0	**WHEEL CYLINDER PISTON PUSH ROD**					
5-12-1	ROD, SP1, SP2, SD1, SD2		8	---- ---	*2260 787	
	SD3	8	8	---- ---	*1329 890	*1329 890
5-13-0	**WHEEL BRAKE SUPPORT**					
5-13-1	SUPPORT, Front	6	2	2072 609		
	Rear, Right	6	1	2072 628		
	Rear, Left	6	1	2072 629		
	Front, 10" Brakes		2	---- ---	2265 581	
	Rear, Right, 10" Brakes		1	---- ---	2265 584	
	Rear, Left, 10" Brakes		1	---- ---	2265 585	
	Front, 11" Brakes		2	---- ---	2265 563	
	Rear, Right, 11" Brakes		1	---- ---	2265 564	
	Rear, Left, 11" Brakes		1	---- ---	2265 565	
	Front, Right, 11" Brakes, SD3, SC1, except Sub.	8	1	---- ---	*1943 838	*1943 838
	Front, Left, 11" Brakes, SD3, SC1, except Sub.	8	1	---- ---	*1943 839	*1943 839
	Rear, 11" Brakes, SD3, SC1, except Sub.	8	2	---- ---	*1943 813	*1943 813
	Front, Right, 12" Brakes, SD3, SC1, SC2, SC3	8	1	---- ---	*1943 796	*1943 796
	Front, Left, 12" Brakes, SD3, SC1, SC2, SC3	8	1	---- ---	*1943 797	*1943 797
	Front, Right, 12" Brakes, SY1	8	1	---- ---	---- ---	1943 798
	Front, Left, 12" Brakes, SY1	8	1	---- ---	---- ---	1943 799
	Rear, 12" Brakes, SD3	8	2	---- ---	*1943 832	*1943 832
5-13-7	GASKET, Brake Support Plate		★	2070 932	2070 933	
5-13-9	BOLT, Support Mounting, Front, Upper		★	2072 682	2207 604	
	Front, Lower		★	2072 681	2207 606	
	Rear		★	2070 041	2265 572	
	Front, 7/16" - 20 x 1 3/4", SD3	8	4	---- ---	*1615 460	*1615 460
	Front, 7/16" - 20 x 2 3/4", SD3	8	2	---- ---	*1850 938	*1850 938
	Front, 7/16" - 20 x 3 1/8", SD3	8	2	---- ---	*1943 691	*1943 691
	Rear, 3/8" - 24 x 1 1/4", SD3	8	10	---- ---	*1484 652	*1484 652
5-13-10	NUT, Support Mounting Bolt, Front Upper		★	601 014	601 014	601 014
	Front, Lower, SP1, SP2, SD1, SD2		★	*1825 351	* 128 027	
	SD3		4	---- ---	* 272 314	* 272 314
	Rear		★	1927 232	120 369	120 369
5-13-22	SEAL, to Strg. Knuckle		2	2072 684	2266 890	
5-13-35	COVER, Adjusting Screw Hole		8	1664 564	1664 564	

★ Indicates use as required. Numerals in parentheses ( ) refer to notes. Printed in U.S.A.
⊟ Indicates parts not listed in any previous parts book. Prices and specifications subject to change without notice.
May 1, 1962 Supersedes Nov. 30, 1961. * Indicates change or addition.

MyMopar.com

CODE	PART NAME AND DESCRIPTION	CYL.	PER CAR	VALIANT LANCER	PLYMOUTH DODGE	CHRYSLER IMPERIAL
5-16-0	**WHEEL BRAKE DUST SHIELD**					
5-16-1	SHIELD, Front, Right, 11" Brakes, SD3, SC1, except Sub.	8	1	---- ---	*1857 056	*1857 056
	Sub.	8	1	---- ---	*1857 056	*1857 056
	Left, 11" Brakes, SD3, SC1, except Sub.	8	1	---- ---	*1857 057	*1857 057
	Rear, 11" Brakes, SD3, SC1, except Sub.	8	2	---- ---	*1857 061	*1857 061
	Front, Right, 12" Brakes, w/o Trough, SD3, SC1, SC2, SC3	8	1	---- ---	*1943 666	*1943 666
	Left, 12" Brakes, w/o Trough, SD3, SC1, SC2, SC3	8	1	---- ---	*1943 667	*1943 667
	Right, 12" Brakes, w/o Trough, SY1	8	1	---- ---	---- ---	1943 686
	Left, 12" Brakes, w/o Trough, SY1	8	1	---- ---	---- ---	1943 687
	Right, 12" Brakes, w/TROUGH, SD3, SC1, SC2, SC3	8	1	---- ---	*2265 236	*2265 236
	Left, 12" Brakes, w/TROUGH, SD3, SC1, SC2, SC3	8	1	---- ---	*2265 237	*2265 237
	Right, 12" Brakes, w/TROUGH, SY1	8	1	---- ---	---- ---	2265 238
	Left, 12" Brakes, w/TROUGH, SY1	8	1	---- ---	---- ---	2265 239
	Rear, 12" Brakes, SD3	8	2	---- ---	*1857 044	*1857 044
5-20-0	**WHEEL BRAKE ADJUSTER**					
5-20-1	SCREW	6	4	2072 651		
	w/10" Brakes, Right		2	---- ---	2260 826	
	Left		2	---- ---	2260 827	
	w/11" Brakes, Right		2	---- ---	2260 782	
	Left		2	---- ---	2260 783	
5-20-4	SPRING, Lock	6	4	1799 518		
5-20-9	LEVER, Auto. Adjusting, Right		2	---- ---	2260 794	
	Left		2	---- ---	2260 795	
5-20-10	CABLE, w/10" Brakes		4	---- ---	2401 513	
	w/11" Brakes		4	---- ---	2266 270	
5-20-11	GUIDE, Cable		4	---- ---	2260 793	
5-20-15	NUT, Pivot	6	4	2072 730		
	w/10" Brakes, Right		2	---- ---	2260 572	
	Left		2	---- ---	2260 573	
	w/11" Brakes, Right		2	---- ---	2260 670	
	Left		2	---- ---	2260 671	
5-20-17	SOCKET	6	4	2072 725		
	w/10" Brakes		4	---- ---	2260 824	
	w/11" Brakes		4	---- ---	2265 068	
5-20-18	WASHER, Adjusting Screw Socket End		4	---- ---	2266 271	
5-20-20	SPRING		4	---- ---	2265 069	
5-22-0	**WHEEL BRAKE ADJUSTING CAM DUST SHIELD SEAL**					
5-22-8	SEAL, SD3	8	8	---- ---	*1633 111	*1633 111
5-25-0	**BRAKE SHOE GUIDE**					
5-25-9	PLATE, w/10" Brakes		4	---- ---	2267 045	
	w/11" Brakes		4	---- ---	2260 788	
5-26-0	**WHEEL BRAKE SHOE GUIDE OR HOLD-DOWN SPRING**					
5-26-1	SPRING, Hold-Down, SP1, SP2, SD1, SD2		8	*2207 520	*2260 791	
	SD3		8	---- ---	* 600 071	* 600 071

★ Indicates use as required. Numerals in parentheses ( ) refer to notes. Printed in U.S.A.
⊟ Indicates parts not listed in any previous parts book. Prices and specifications subject to change without notice.
* Indicates change or addition.

May 1, 1962 Supersedes Nov. 30, 1961.

MyMopar.com

CODE	PART NAME AND DESCRIPTION	CYL.	PER CAR	VALIANT LANCER	PLYMOUTH DODGE	CHRYSLER IMPERIAL
5-26-0	**WHEEL BRAKE SHOE GUIDE OR HOLD-DOWN SPRING - Cont'd**					
5-26-2	RETAINER, Upper, SP1, SP2, SD1, SD2		8	---- ---	2260 792	
	Lower, SP1, SP2, SD1, SD2		8	---- ---	2260 792	
	Upper, SD3	8	8	---- ---	600 072	600 072
	Lower SD3	8	8	---- ---	600 073	600 073
5-26-4	PIN, Hold-Down Spring, Front Wheel, 10" Brakes		4	---- ---	2260 548	
	11" Brakes		4	---- ---	2260 549	
	Rear Wheel		4	---- ---	2260 548	
5-26-5	ANCHOR, Hold-Down Spring	6	8	2072 675		
5-27-0	**BRAKE PEDAL AND BUSHING**					
5-27-1	PEDAL, w/Std. Trans., SP1, SP2, SD1, SD2		1	2260 736	2260 004	
	w/Auto Trans., SP1, SP2, SD1, SD2		1	2260 738	2260 074	
	w/Std. or Auto. Trans., SC1, SC2, SC3, UP TO	8	1	---- ---	---- ---	2260 005(1)
	w/Std. or Auto. Trans., SD3, SC1, SC2, SC3, AFTER	8	1	---- ---	2404 779	2404 779(1)
	SY1	8	1	---- ---	---- ---	2260 065
5-27-2	SLEEVE	6	1	2073 634		
	BUSHING		2	---- ---	1637 779	1637 779
5-27-6	LOCK, Sleeve	6	1	2072 816		
	w/Heavy Duty Std. Trans.	6	1	2207 701		
5-27-9	BRACE, Instrument Panel to Pedal Bracket		1	---- ---	2161 912	
	Pedal Bracket to Dash Panel		1	---- ---	2162 795	
	Pedal Bracket to Lower Reinf., SD3	8	1	---- ---	1901 788	
	Lower Reinf. to Pedal Bracket, SD3	8	1	---- ---	2080 747	
	Windshield Frame to Pedal Bracket, SD3, SC1, SC2, SC3	8	1	---- ---	1901 801	1901 801
5-27-12	NUT, Sleeve Lock Screw	6	1	2208 008		
5-27-21	BUSHING, Hub	6	2	2072 822		
5-28-0	**BRAKE PEDAL PAD**					
5-28-8	PAD, w/Std. Trans., SP1, SP2, SD1, SD2		1	*1731 228	*1731 228	
	w/Auto. Trans., SP1, SP2, SD1, SD2		1	2260 071	2260 071	
	w/Std. Trans., Diamond Shape, SD3, SC1, SC2		1	---- ---	*2201 197	*2201 197
	w/Std. Trans., Square Shape, SD3, SC1, SC2	8	1	---- ---	*1940 202	*1940 202
	w/Auto. Trans., SD3, SC1, SC2, SC3		1	---- ---	1820 005	1820 005
	SY1	8	1	---- ---	---- ---	1946 357
5-29-0	**BRAKE PEDAL SHAFT**					
5-29-1	SHAFT, w/Std. Trans., SC1, SC2		1	---- ---	1730 009	1730 009
	w/Auto. Trans.		1	---- ---	1637 782	1637 782
5-30-0	**BRAKE PEDAL STOP**					
5-30-12	PIN, w/Power Brakes, SD3, SC1, SC2, SC3, AFTER Approx. Serial No. 147528	8	1	---- ---	2404 781	2404 781(2)
5-31-0	**BRAKE PEDAL BRACKET**					
5-31-11	REINFORCEMENT	6	1	2207 759		
	w/o Power Brakes, SP1, SP2, SD1, SD2		1	---- ---	2260 008	
	w/Power Brakes, SP1, SP2, SD1, SD2, UP TO		1	---- ---	2260 010(2)	
	w/Power Brakes, SP1, SP2, SD1, SD2, AFTER		1	---- ---	*2401 405(2)	
	w/o Power Brakes, SD3, SC1, SC2	8	1	---- ---	2260 705	2260 705
	w/Power Brakes, SD3, SC1, SC2, SC3	8	1	---- ---	2260 703	2260 703
	SY1	8	1	---- ---	---- ---	2260 069

NOTE 1: SC1 Approximate Serial No. 147528, SC2 Approximate Serial No. 147528, SC3 Approximate Serial No. 147528.

NOTE 2: SP1 Approximate Serial No. 107605, SP2 Approximate Serial No. 107605, SD1 Approximate Serial No. 110822, SD2 Approximate Serial No. 110822.

MyMopar.com

CODE	PART NAME AND DESCRIPTION	CYL.	PER CAR	VALIANT LANCER	PLYMOUTH DODGE	CHRYSLER IMPERIAL
5-31-0	**BRAKE PEDAL BRACKET - Cont'd**					
5-31-12	GASKET, Reinforcement		1	2207 760	2260 016	2260 016
5-31-13	NUT, Reinforcement, SC1, SC2, SC3		★	---- ---	2076 232	2076 232
	Pedal Bracket		1	---- ---	2076 232	2076 232
5-31-15	BRACKET, Pedal		1	2260 734	*2404 777	*2404 777
5-31-18	STRUT, Support, Right	6	1	2207 709		
	Left	6	1	2207 710		
5-34-0	**BRAKE PEDAL RETURN SPRING**					
5-34-1	SPRING, w/o Power Brakes, SC1, SC2		1	2260 710	2260 710	2260 710
5-34-6	SEAT, Spring, w/o Power Brakes, SC1, SC2		1	2260 709	2260 709	2260 709
5-39-0	**MASTER CYLINDER**					
5-39-1	SERVICE PACKAGE, w/o Power Brakes,					
	w/o Piston, SP1, SP2, SD1, SD2		1	2196 905	2196 905	
	w/o Power Brakes, w/PISTON, SP1, SP2, SD1, SD2		1	2196 904	2275 516	
	w/Power Brakes, w/PISTON, SP1, SP2, SD1, SD2		1	*2298 939	*2298 939	
	w/o Power Brakes, w/o Piston, SD3, SC1, SC2	8	1	---- ---	1879 303	1879 303
	w/o Power Brakes, w/PISTON, SD3, SC1, SC2	8	1	---- ---	2275 517	2275 517
	w/Power Brakes, w/PISTON, SD3	8	1	---- ---	2275 518	2275 518
5-39-3	CYLINDER, Master, w/o Power Brakes, SP1, SP2, SD1, SD2		1	2275 368	2071 060	
	w/Power Brakes SP1, SP2, SD1, SD2		1	2275 369	2275 519	
	w/o Power Brakes, SD3, SC1, SC2	8	1	---- ---	2260 017	2260 017
	w/Power Brakes, SD3	8	1	---- ---	2260 018	2260 018
5-39-4	COVER PACKAGE		1	1752 470	1752 470	1752 470
5-39-11	BOLT, Mounting, w/o Power Brakes, SC1, SC2		4	---- ---	2260 046	2260 046
5-39-18	GASKET, Master Cylinder, w/o Power Brakes, SC1, SC2		1	1559 753	1559 753	1559 753
	w/Power Brakes	6	1	2074 965		
5-39-20	COVER		1	2265 642	2265 642	2265 642
5-39-21	SCREW, Cover		1	1556 675	1556 675	1556 675
5-39-24	GASKET, Cover		1	2122 276	2122 276	2122 276
5-40-0	**MASTER CYLINDER BOOT**					
5-40-1	BOOT, w/o Power Brakes, SC1, SC2		1	1828 388	1828 388	1828 388
5-43-0	**MASTER CYLINDER VALVE**					
5-43-1	VALVE		1	1318 446	1318 446	1318 446
5-43-5	SEAL		1	1617 379	1617 379	1617 379
5-44-0	**MASTER CYLINDER PISTON**					
5-44-8	STOP	6	1	1828 389		
	w/o Power Brakes, SC1, SC2		1	---- ---	1828 389	1828 389
	w/Power Brakes		1	---- ---	2265 635	2265 635
5-44-9	SCREW, Stop, w/Power Brakes		1	---- ---	2200 341	2200 341
	w/o Power Brakes, SC1, SC2		2	6022 201	6022 201	6022 201

★ Indicates use as required. Numerals in parentheses ( ) refer to notes. Printed in U.S.A.
⊟ Indicates parts not listed in any previous parts book. Prices and specifications subject to change without notice.
* Indicates change or addition. March 8, 1963 Supersedes May 1, 1962.

MyMopar.com

CODE	PART NAME AND DESCRIPTION	CYL.	PER CAR	VALIANT LANCER	PLYMOUTH DODGE	CHRYSLER IMPERIAL
5-45-0	**MASTER CYLINDER PISTON CUP**					
5-45-8	CUP, Secondary, SD3	8	1	---- ---	* 958 659	* 958 659
5-46-0	**MASTER CYLINDER PISTON RETURN SPRING**					
5-46-1	SPRING		1	1738 268	1738 268	1738 268
5-47-0	**MASTER CYLINDER PISTON PUSH ROD**					
5-47-4	BOLT, End		1	2201 181	2201 181	2201 181
5-47-8	NUT, End Bolt		1	2122 266	2122 266	2122 266
5-47-10	RING, Push Rod, w/o Power Brakes, SC1, SC2	8	1	---- ---	1737 167	1737 167
5-52-0	**MASTER CYLINDER BRAKE TUBE**					
5-52-3	NUT, Master Cylinder End		1	1828 461	1828 461	1828 461
	Tee End		1	1739 226	1739 226	1739 226
5-52-62	CONNECTOR		1	1828 396	1828 396	1828 396
	ELBOW, for Field Installed Power Brakes		1	⊟2421 303	⊟2298 946	
5-53-0	**BRAKE TUBING AND COVERS**					
5-53-3	TUBING, 25 Foot Roll, 3/16" O.D.		★	1843 251	1843 251	1843 251
	1/4" O.D.		★	1843 252	1843 252	1843 252
	5/16" O.D.		★	1843 253	1843 253	1843 253
	3/8" O.D.		★	1843 254	1843 254	1843 254
5-53-4	COVER, Tube, 25 Foot Roll for 3/16" O.D. Tube.		★	1843 257	1843 257	1843 257
	For 1/4" O.D. Tube		★	1843 258	1843 258	1843 258
	For 5/16" O.D. Tube		★	1843 259	1843 259	1843 259
5-55-0	**WHEEL CYLINDER CONNECTING TUBE**					
5-55-1	TUBE, 11" Brakes, Front, Right, SD3, SC1	8	1	---- ---	*1633 092	*1633 092
	Left, SD3, SC1	8	1	---- ---	*1633 093	*1633 093
	12" Brakes, Front, Right, SD3	8	1	---- ---	*1558 192	*1558 192
	Left, SD3	8	1	---- ---	*1558 191	*1558 191
5-56-0	**BRAKE TUBE CLIP**					
5-56-2	CLIP		★	1119 423	1119 423	1119 423
			★	2123 341	2123 341	2123 341
			★	---- ---	2207 933	
5-57-0	**BRAKE TUBE BRACKET**					
5-57-2	BRACKET, Front, SD3, SC1, SC2	8	2	---- ---	*1739 248	*1739 248
	SC3, SY1	8	2	---- ---	---- ---	2123 212
	Rear, SP1, SP2, SD1, SD2		1	---- ---	*2208 892	
	SD3	8	1	---- ---	*2123 214	*2123 214
5-58-0	**BRAKE TUBE TEE**					
5-58-1	TEE, Master Cylinder to Brake Tube	6	1	2208 853		
	w/o Power Brakes, SP1, SP2, SD1, SD2		1	---- ---	*2207 937	
	w/ Power Brakes, SP1, SP2, SD1, SD2		1	---- ---	*2208 852	
	SD3, SC1, SC2	8	1	---- ---	*2123 217	*2123 217
	SC3, SY1	8	1	---- ---	---- ---	2123 218
	Rear Axle Tube	6	1	1940 621		
	SC1, SC2, SC3		1	---- ---	1118 161	1940 622
	SY1	8	1	---- ---	---- ---	2070 311
5-58-2	SCREW		1	6023 133	6023 133	6023 133

★ Indicates use as required. Numerals in parentheses ( ) refer to notes. Printed in U.S.A.
⊟ Indicates parts not listed in any previous parts book. Prices and specifications subject to change without notice.
May 1, 1962 Supersedes Nov. 30, 1961. * Indicates change or addition.

MyMopar.com

CODE	PART NAME AND DESCRIPTION	CYL.	PER CAR	VALIANT LANCER	PLYMOUTH DODGE	CHRYSLER IMPERIAL
5-62-0	**BRAKE FLEXIBLE HOSE**					
5-62-1	HOSE, Front, SP1, SP2, SD1, SD2		2	2073 023	2200 996	
	SD3, SC1, SC2	8	2	---- ---	1739 249	1739 249
	SC3, SY1	8	2	---- ---	---- ---	1554 347
	Rear, SP1, SP2, SD1, SD2		1	1739 249	2207 918	
	SD3, SC1, SC2, SC3	8	1	---- ---	1739 249	1739 249
	SY1	8	1	---- ---	---- ---	1739 215
5-62-7	GASKET, Front Wheel Hose		2	2072 612	1406 748	1406 748
5-62-20	LOCK, Hose to Bracket		3	2208 893	2208 893	2208 893
5-63-0	**WHEEL CYLINDER SERVICE PACKAGE**					
5-63-1	SERVICE PACKAGE, Wheel Cylinder Front, SP1, SP2, SD1, SD2		2	2084 788	2275 535	
	Rear, SP1, SP2, SD1, SD1		2	2084 789	2275 536	
	Front and Rear, SD3	8	4	---- ---	1818 639	1818 639
	Rear, Police and Heavy Duty, 11" Brakes w/13/16" bore		2	---- ---	⊟2421 347	
5-63-3	SERVICE PACKAGE, Wheel Cylinder Piston, Front, SP1, SP2, SD1, SD2		2	2084 790	2275 539	
	Rear, SP1, SP2, SD1, SD2		2	2084 791	2275 540	
	Front and Rear, SD3	8	4	---- ---	1818 834	1818 834
	Rear, Police and Heavy Duty, 11" Brakes w/13/16" bore		2	---- ---	⊟2421 346	
5-64-0	**WHEEL BRAKE CYLINDER**					
5-64-1	CYLINDER, Front, Right, SP1, SP2, SD1, SD2		1	2072 616	2265 362	
	Left, SP1, SP2, SD1, SD2		1	2072 617	2265 363	
	Rear, SP1, SP2, SD1, SD2		2	2072 632	2260 842	
	Front, Upper, Right, SD3	8	1	---- ---	1857 054	1857 054
	Left, SD3	8	1	---- ---	1857 055	1857 055
	Front, Lower, Right, SD3	8	1	---- ---	1857 052	1857 052
	Left, SD3	8	1	---- ---	1857 053	1857 053
	Rear, SD3	8	2	---- ---	1857 051	1857 051
	Rear, Police and Heavy Duty, 11" Brakes w/13/16" bore		2	---- ---	⊟2401 930	
	Front, Upper, Right, SC1 Police	8	1	---- ---	---- ---	2201 666
	Front, Upper, Left, SC1 Police	8	1	---- ---	---- ---	2201 667
	Front, Lower, Right, SC1 Police	8	1	---- ---	---- ---	2201 668
	Front, Lower, Left, SC1 Police	8	1	---- ---	---- ---	2201 669
	Rear, SC1 Police	8	2	---- ---	---- ---	2201 499
5-64-2	SCREW, Mounting, SP1, SP2, SD1, SD2		8	2072 615	2266 876	
	SD3	8	8	---- ---	1943 840	1943 840
5-67-0	**WHEEL CYLINDER BLEEDER SCREW**					
5-67-1	SCREW, SP1, SP2, SD1, SD2		4	2072 658	2072 658	
	SD3	8	6	---- ---	1261 834	1261 834
5-69-0	**WHEEL CYLINDER BOOT**					
5-69-1	BOOT, Front, SP1, SP2, SD1, SD2		4	2072 625	2260 840	
	Rear, SP1, SP2, SD1, SD3		4	2072 679	2260 846	
	Front and Rear, SD3	8	8	---- ---	1136 872	1136 872
	Front and Rear, SC1 Police	8	8	---- ---	---- ---	2201 498
5-70-0	**WHEEL CYLINDER PISTON**					
5-70-1	PISTON, Front, SP1, SP2, SD1, SD2		4	2072 655	2260 837	
	Rear, SP1, SP2, SD1, SD2		4	2072 656	2260 843	
	Front and Rear, SD3	8	8	---- ---	1312 830	1312 830
	Rear, Police and Heavy Duty, 11" Brakes, w/13/16" bore		4	---- ---	⊟2401 938	

★ Indicates use as required. Numerals in parentheses ( ) refer to notes. Printed in U.S.A.
⊟ Indicates parts not listed in any previous parts book. Prices and specifications subject to change without notice.
* Indicates change or addition. March 8, 1963 Supersedes May 1, 1962.

MyMopar.com

CODE	PART NAME AND DESCRIPTION	CYL.	PER CAR	VALIANT LANCER	PLYMOUTH DODGE	CHRYSLER IMPERIAL
5-71-0	**WHEEL CYLINDER PISTON CUP**					
5-71-1	CUP, Front, SP1, SP2, SD1, SD2		4	1669 337	2260 838	
	Rear, SP1, SP2, SD1, SD2		4	2072 636	2260 844	
	Front and Rear, SD3	8	8	---- ---	*2260 838	*2260 838
	Rear, Police and Heavy Duty, 11" Brakes w/13/16" bore		4	---- ---	*2072 636	
5-71-2	SPRING, Front, SP1, SP2, SD1, SD2		2	1923 765	2260 839	
	Rear, SP1, SP2, SD1, SD2		2	2072 637	1923 765	
	Front, SD3	8	4	---- ---	1614 894	1614 894
	Rear, SD3	8	2	---- ---	1633 106	1633 106
	Rear, Police and Heavy Duty, 11" Brakes w/13/16" bore		2	---- ---	*2072 637	
5-72-0	**WHEEL CYLINDER PISTON CUP EXPANDER**					
5-72-1	EXPANDER, Front and Rear Wheel, SD3	8	8	---- ---	1674 081	1674 081
5-100-0	**POWER BRAKE POWER UNIT**					
5-100-1	SERVICE PACKAGE, for 2074 930 and 2279 993 Power Unit	6	1	*2075 001		
	For 2401 148 and 2298 968 Power Unit		1	---- ---	2421 082	
5-100-2	POWER UNIT		1	*2074 930		
	SP1, SP2, SD1, SD2,		1	---- ---	*2421 355	
	SD3	8	1	---- ---	2201 915	2201 915
5-100-20	ROD, Push, for 2401 148 and 2298 968 Power Unit		1	---- ---	2401 168	
5-100-22	SCREW, Front Housing Spacer, for 2401 148 and 2298 968 Power Unit		2	---- ---	2401 856	
	Front to Rear Housing, for 2401 148 and 2298 968 Power Unit		10	---- ---	⊟2401 173	
5-100-26	BOOT, Push Rod, for 2401 148 and 2298 968 Power Unit		1	---- ---	2401 165	
5-100-32	RETAINER, Push Rod, for 2401 148 and 2298 968 Power Unit		1	---- ---	2401 166	
5-100-62	SCREW, Push Rod, for 2401 148 and 2298 968		1	---- ---	2401 852	
5-100-87	RING, Two Stage Reaction, for 2401 148 and 2298 968 Power Unit		1	---- ---	⊟2401 866	
5-100-90	ADAPTOR, for 2401 148 and 2298 968 Power Unit		1	---- ---	2401 170	
5-100-91	SEAL, Adaptor, for 2401 148 and 2298 968 Power Unit		1	---- ---	2401 163	
	SEAL, Adaptor Retainer, for 2401 148 and 2298 968 Power Unit		1	---- ---	⊟2401 171	
5-100-92	RING, Adaptor Snap, for 2401 148 and 2298 968 Power Unit		1	---- ---	*2401 164	
5-100-94	CONNECTOR, Vacuum Hose, for 2401 148 and 2298 968 Power Unit		1	---- ---	2401 159	
5-100-95	WASHER, Connector, for 2401 148 and 2298 968 Power Unit		1	---- ---	2401 857	
5-100-105	REINFORCEMENT, Brake Pedal Bellows, SY1	8	1	---- ---	---- ---	1750 593

★ Indicates use as required. Numerals in parentheses ( ) refer to notes. Printed in U.S.A.
⊟ Indicates parts not listed in any previous parts book. Prices and specifications subject to change without notice.
March 8, 1963 Supersedes May 1, 1962. * Indicates change or addition.

MyMopar.com

CODE	PART NAME AND DESCRIPTION	CYL.	PER CAR	VALIANT LANCER	PLYMOUTH DODGE	CHRYSLER IMPERIAL
5-100-0	**POWER BRAKE POWER UNIT - Cont'd**					
5-100-161	SEAL, Vacuum, for 2071 072 and 2201 915 Power Unit		1	---- ---	2266 942	2266 942
	"O" RING, for 2071 072 and 2201 915 Power Unit		1	---- ---	2401 132	2401 132
	SEAL, Valve Body, for 2401 148 and 2298 968 Power Unit		1	---- ---	2401 163	
	SEAL, Sleeve, for 2401 148 and 2298 968 Power Unit		1	---- ---	2401 172	
5-100-166	RETAINER, Package, Plunger and Push Rod for 2401 148 and 2298 968 Power Unit		1	---- ---	2421 084	
5-100-167	BUSHING, Plunger, for 2401 148 and 2298 968 Power Unit		2	---- ---	2401 853	
5-100-195	RING, Lever Retaining, for 2401 148 and 2298 968 Power Unit		1	---- ---	2401 858	
	Diaphragm Retaining, for 2401 148 and 2298 968 Power Unit		1	---- ---	2401 161	
5-100-197	SILENCER, Valve Body, for 2201 915 Power Unit, SD3	8	1	---- ---	⊟2401 154	⊟2401 154
5-100-206	PLATE and SEAL ASSEMBLY, for 2201 915 Power Unit, SD3	8	1	---- ---	⊟2401 126	⊟2401 126
5-100-209	GASKET, Power Brake Mounting to Dash	6	1	1559 753		
5-100-210	WASHER, Seal, for 2071 072 and 2201 915 Power Unit		1	---- ---	2401 129	2401 129
5-102-0	**POWER BRAKE VACUUM TANK**					
5-102-2	TANK	6	1	2071 043		
5-102-11	NUT, Mounting	6	★	2076 232		
5-105-0	**POWER BRAKE VACUUM CHECK VALVE**					
5-105-1	VALVE		1	2074 934		
	Use with 2071 072 and 2201 915 Power Unit		1	---- ---	2401 130	2401 130
	Use with 2401 148 and 2298 968 Power Unit		1	---- ---	2421 083	
5-110-0	**POWER BRAKE TUBE CONNECTOR**					
5-110-18	CONNECTOR, w/o Heater	6	1	1944 154		
	w/Heater	6	1	1944 092		
	2 Way		1	---- ---	1944 092	1944 092
	3 Way		1	---- ---	1948 838	1948 838
5-111-0	**POWER BRAKE VACUUM HOSE**					
5-111-17	HOSE, (11/32" I.D., sold by the inch)		★	*1064 541	*1064 541	*1064 541
	(1/2" I.D., sold by the inch)		★	*1671 650	*1671 650	*1671 650
5-112-0	**POWER BRAKE HOSE CLAMP**					
5-112-1	CLAMP		★	448 797	448 797	448 797
5-113-0	**POWER BRAKE AIR CLEANER**					
5-113-17	FILTER, for 2401 148 and 2298 968 Power Unit		1	---- ---	2401 855	
	For 2201 915 Power Unit, SD3	8	1	---- ---	⊟2401 155	⊟2401 155

★ Indicates use as required. Numerals in parentheses ( ) refer to notes. Printed in U.S.A.
⊟ Indicates parts not listed in any previous parts book. Prices and specifications subject to change without notice.
* Indicates change or addition.

March 8, 1963 Supersedes May 1, 1962.

MyMopar.com

CODE	PART NAME AND DESCRIPTION	CYL.	PER CAR	VALIANT LANCER	PLYMOUTH DODGE	CHRYSLER IMPERIAL

NOTES

MyMopar.com

GROUP 6 - CLUTCH

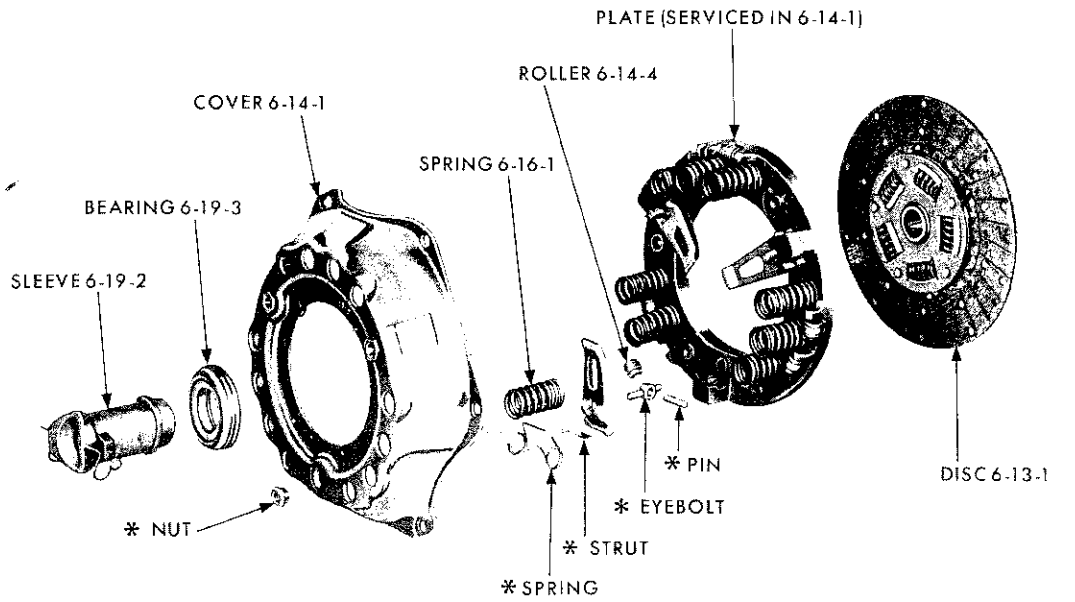

* SERVICED IN LEVER PACKAGE 6-17-3

19x8633A

CLUTCH (TYPE 2) - PLYMOUTH SP1-2 AND DODGE SD1-2

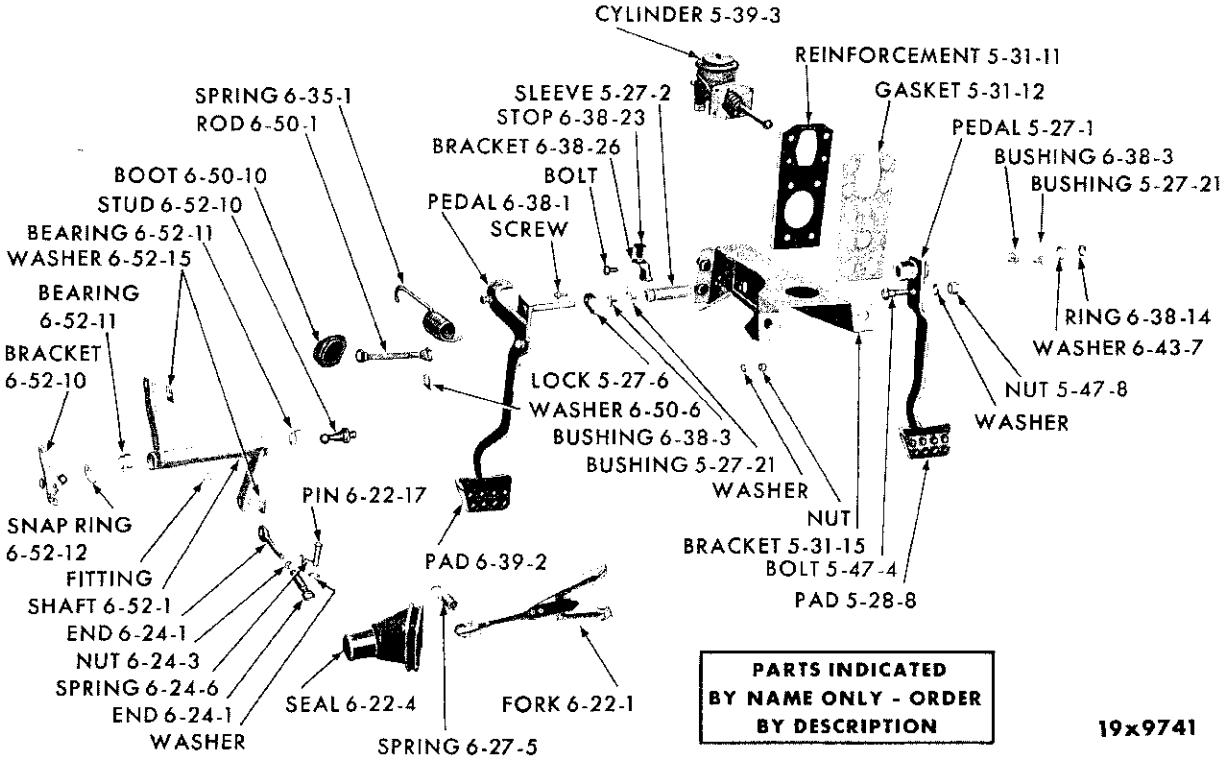

PARTS INDICATED BY NAME ONLY - ORDER BY DESCRIPTION

19x9741

CLUTCH AND BRAKE PEDAL LINKAGE - VALIANT SV1 AND LANCER SL1

MyMopar.com

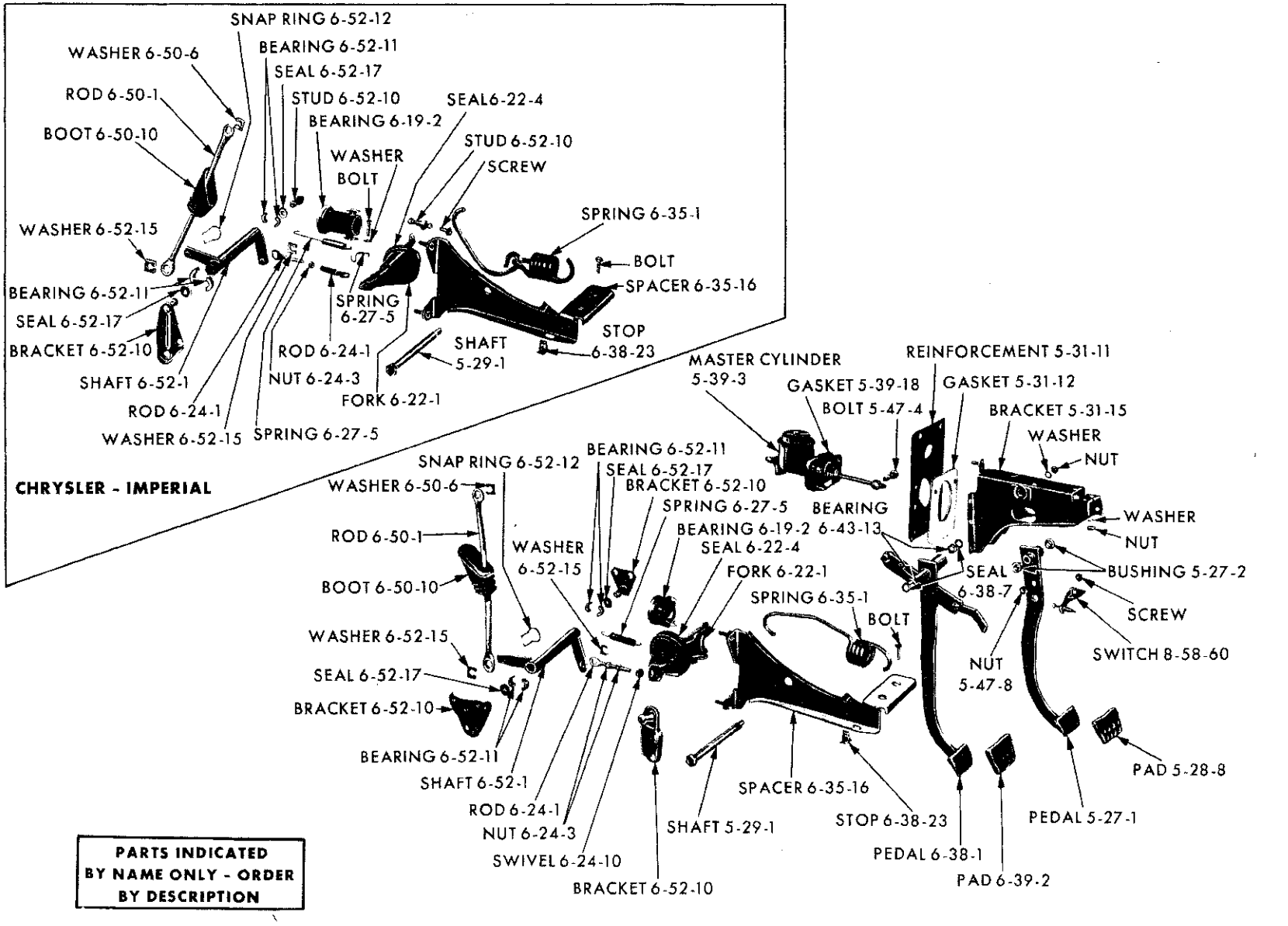

CLUTCH AND BRAKE PEDAL LINKAGE - PLYMOUTH SP1-2, DODGE SD1-2-3, CHRYSLER SC1-2-3 AND IMPERIAL SY1

MyMopar.com

CODE	PART NAME AND DESCRIPTION	CYL.	PER CAR	VALIANT LANCER	PLYMOUTH DODGE	CHRYSLER IMPERIAL
6-01-0	**CLUTCH**					
	NOTE 1: Used with Pressure Plate Having 6 Springs.					
	NOTE 2: Used with Pressure Plate Having 3 Springs.					
	NOTE 3: Used with Pressure Plate Having 9 Springs.					
6-01-3	CLUTCH PACKAGE, 9 1/8" Std. Clutch, w/170 cu. in. Eng.	6	1	2279 893		
	9 1/4" Clutch, w/225 cu. in. Eng.	6	1	2240 304	2240 304	
6-09-0	**CLUTCH HOUSING**					
6-09-1	HOUSING, w/170 and 225 cu. in.	6	1	2121 864	2121 864	
	w/318 cu. in. Eng.	8	1	---- ---	2264 629	
	SP2, SD2, w/361 cu. in. Eng., SP2, SD2, w/383 cu. in. Eng., Police Cars	8	1	---- ---	*2128 481	
	SD3, SC1, w/361 cu. in. Eng., SC1, SC2, w/383 cu. in. Eng., SC2, w/413 cu. in. Eng.	8	1	---- ---	*2128 351	*2128 351
	SP2, SD2, Cast Steel, w/413 cu. in. Eng. (also specify 1 of 2406 043 Pan)	8	1	---- ---	*2402 218	
	SCREW, w/WASHER, Housing to Block	6	★	6023 187	6023 187	
	WASHER, Lock	6	★	6023 050	6023 050	
6-09-11	STRUT, Housing to Cylinder Block	6	1	2129 887	2129 887	
	SCREW, Housing Strut	8	1	---- ---	*6022 252	
6-10-0	**CLUTCH HOUSING PAN**					
6-10-2	PAN	6	1	2129 885	2129 885	
	w/318 cu. in. Eng.	8	1	---- ---	2128 938	
	SP2, SD2, w/413 cu. in. Eng.	8	1	---- ---	*2128 877	
	SP2, SD2, w/361 cu. in. Eng., SP2, SD2, w/383 cu. in. Eng., Police Cars	8	1	---- ---	*2128 877	*2128 877
	SD3, SC1, w/361 cu. in. Eng., SC1, SC2, w/383 cu. in. Eng., SC2, w/413 cu. in. Eng.	8	1	---- ---	*1739 616	*1739 616
6-10-10	SEAL, Clutch Housing Pan	6	1	2129 886	2129 886	
	w/318 cu. in. Eng.	8	1	---- ---	2128 939	
6-10-31	SCREW, Pan	8	★	1947 953	1947 953	1947 953
	WASHER, Pan Screw	8	★	---- ---	*6023 054	
6-13-0	**CLUTCH DISC**					
6-13-1	DISC, 9 1/8" Std. Clutch, w/170 cu. in. Eng.	6	1	2298 904		
	9 1/4" Clutch, w/225 cu. in. Eng.	6	1	2298 905		
	10" Clutch	6	1	2200 069	2200 069	---- ---
	9 1/4" Std. Clutch, w/225 cu. in. Eng.	6	1	---- ---	2298 905	
	10" Clutch, w/318 cu. in. Eng.	8	1	---- ---	2200 051	
	10 1/2" Clutch, SD3, SC1	8	1	---- ---	2266 232	2266 232
	10 1/2" Clutch, w/413 cu. in. Eng.	8	1	---- ---	*2401 097	
	11" Clutch, SC2, SC1, w/383 cu. in. Eng.	8	1	---- ---	---- ---	*2208 273
6-13-4	FACING, Disc, 9 1/4" Std. Clutch, w/24 Rivet Holes, 225 cu. in. Eng. Note 2	6	2	1820 454	1820 454	
	9 1/4" Std. Clutch, w/32 Rivet Holes, w/225 cu. in. Eng. Note 3	6	2	859 882	859 882	
	9 1/8" Std. Clutch, w/24 Rivet Holes, w/170 cu. in. Eng. Note 2	6	2	2265 464		
	9 1/8" Std. Clutch, w/32 Rivet Holes, w/170 cu. in. Eng. Note 1	6	2	2073 684		
	10" Clutch, Front	6	1	2201 218	2201 218	
	10" Clutch, Rear	6	1	2201 217	2201 217	
	10" Std. Clutch, w/318 cu. in. Eng.	8	2	---- ---	1554 593	
	10 1/2" Clutch, SD3, SC1	8	2	---- ---	2266 233	2266 233
	10 1/2" Clutch, w/413 cu. in. Eng.	8	2	---- ---	*2401 098	
	11" Clutch, SC2, SC1, w/383 cu. in. Eng.	8	2	---- ---	*2208 272	*2208 272

★ Indicates use as required. Numerals in parentheses ( ) refer to notes. Printed in U.S.A.
⊟ Indicates parts not listed in any previous parts book. Prices and specifications subject to change without notice.
* Indicates change or addition.

March 8, 1963 Supersedes May 1, 1962.

MyMopar.com

CODE	PART NAME AND DESCRIPTION	CYL.	PER CAR	VALIANT LANCER	PLYMOUTH DODGE	CHRYSLER IMPERIAL
6-13-0	**CLUTCH DISC - Cont'd**					
6-13-8	RIVET, Facing, 9/64" dia., 7/32" lgh.		★	* 660 146	* 660 146	* 660 146
	RIVET, Note 2, 1/8" dia., 1/4" lgh.	6	24	1313 312	1313 312	
6-14-0	**CLUTCH COVER AND PRESSURE PLATE**					
6-14-1	COVER, w/PLATE, 9 1/8" Std. Clutch, w/170 cu. in. Eng.	6	1	2298 903	---- ---	---- ---
	9 1/4" Std. Clutch, w/225 cu. in. Eng.	6	1	2298 518	2298 518	
	10" Clutch, w/170 cu. in. Eng.	6	1	2201 212		
	10" Clutch	6	1	---- ---	2266 235	
	10" Clutch, w/318 cu. in. Eng.	8	1	---- ---	2122 254	
	10 1/2' Clutch, w/318, 361 cu. in. Eng.	8	1	---- ---	2122 255	2122 255
	10 1/2" Clutch, w/413, 383 cu. in. Eng.	8	1	---- ---	*2401 095	
	11" Clutch, w/413, 383, cu. in. Eng.	8	1	---- ---	---- ---	*2208 274
6-14-4	ROLLER, Centrifugal, w/10", 10 1/2" and 11" Clutch	8	6	---- ---	2122 262	2122 262
6-14-10	SCREW, Clutch Cover, w/9 1/8" and 9 1/4" Clutch	6	6	307 555	307 555	
	w/10 1/2" and 11" Clutch	8	6	---- ---	314 926	314 926
	w/10" Clutch		6	2200 050	2200 050	314 926
6-15-0	**CLUTCH PRESSURE PLATE**					
6-15-1	PLATE, Pressure, 9 1/8" Clutch	6	1	855 519		
6-16-0	**CLUTCH PRESSURE SPRING**					
6-16-1	SPRING, w/9 1/8" Clutch, w/170 cu. in. Eng., 7 1/4 Red Coils	6	3	1067 037		
	9 1/8" Clutch, w/170 cu. in. Eng., 6 3/4 White Coils	6	3	1406 504		
	9 1/8" Clutch, w/170 cu. in. Eng., 9 Tan Coils	6	3	2266 239		
	9 1/4" Clutch, 7 1/4 Red Coils	6	3	1067 037		
	9 1/4" Clutch, 7 3/4 Orange Coils	6	9	864 397		
	9 1/4" Clutch, 8 3/8 Red Stripe Coils	6	3	2208 268	2208 268	
	10" Clutch, 7 3/4 Lavender Coils	6	6	855 521		
	10" Clutch, 7 3/4 Tan Coils	6	3	866 591	866 591	
	10" Clutch, 7 1/4 Red Coils		9	1067 037	1067 037	
	10" Clutch, 6 3/4 White Coils		3	---- ---	1406 504	
	SD3, SC1, 10 1/2" Clutch, 7 3/4 Orange Coils	8	6	864 397	864 397	864 397
	SD3, SC1, 10 1/2" Clutch, 7 1/4 Red Coils	8	6	1067 037	1067 037	1067 037
	SC2, 11" Clutch, 7 3/4 Orange Coils	8	6	---- ---	---- ---	864 397
	SC2, 11" Clutch, 6 3/4 White Coils	8	6	---- ---	---- ---	1406 504
6-17-0	**CLUTCH RELEASE LEVER**					
6-17-3	LEVER PACKAGE, 9 1/4" Clutch, 225 cu. in. Eng., w/9 Pressure Plate Springs	6	1	2240 634	2240 634	
	9 1/8" Clutch, 170 cu. in. Eng., w/6 Pressure Plate Springs	6	1	2279 894		
	9 1/4" Clutch, 225 cu. in. Eng., w/3 Pressure Plate Springs	6	1	2298 909	2298 909	
	9 1/8" Clutch, 170 cu. in. Eng., w/3 Pressure Plate Springs	6	1	2298 909		
	10", 10 1/2" and 11" Clutch		1	2084 250	2084 250	2084 250
6-19-0	**CLUTCH RELEASE BEARING**					
6-19-2	BEARING, w/SLEEVE, except SD3		1	2072 852	2072 852	2200 301
	SD3		1	---- ---	2200 301	
6-19-3	BEARING		1	658 998	658 998	658 998

★ Indicates use as required. Numerals in parentheses ( ) refer to notes. Printed in U.S.A.
⊟ Indicates parts not listed in any previous parts book. Prices and specifications subject to change without notice.
March 8, 1963 Supersedes May 1, 1962. * Indicates change or addition.

MyMopar.com

CODE	PART NAME AND DESCRIPTION	CYL.	PER CAR	VALIANT LANCER	PLYMOUTH DODGE	CHRYSLER IMPERIAL
6-20-0	**CLUTCH RELEASE BEARING RETURN SPRING**					
6-20-14	SPRING, except SD3		1	2073 687	2073 687	
	SD3, SC1, SC2	8	1	---- ---	671 915	671 915
6-22-0	**CLUTCH RELEASE FORK**					
6-22-1	FORK, includes SPRING, except SD3		1	2072 902	2260 047	
	SD3, SC1, SC2		1	---- ---	1618 848	1618 848
6-22-4	SEAL, except SD3		1	2260 021	2260 021	
	SD3, SC1, SC2	8	1	---- ---	2075 009	2075 009
6-22-15	PIVOT, except SD3		1	2072 900	2260 719	
	SD3, SC1, SC2		1	---- ---	* 633 238	633 238
	SP2, SD2, w/413 cu. in. Eng.	8	1	---- ---	*2401 908	
	SCREW		2	6022 226	6022 226	6022 226
6-22-17	PIN		1	1324 090	1324 090	1324 090
6-22-19	SPRING, except SD3		1	2072 901	2072 901	
	SD3, SC1, SC2	8	1	---- ---	---- ---	2200 349
6-24-0	**CLUTCH RELEASE ROD**					
6-24-1	END, Front, SD3, SC1, SC2		1	2072 849	---- ---	2200 029
	Rear, SD3, SC1, SC2		1	1675 246	---- ---	2200 028
	Rod, Clutch Release, except SD3		1	---- ---	2260 033	
6-24-3	NUT, Adjusting, except SD3		1	1407 347	6023 117	
	SD3, SC1, SC2		1	---- ---	1407 347	1407 347
6-24-6	SPRING, Rear		1	1634 508	1634 508	1634 508
6-24-10	SWIVEL, Adjusting		1	---- ---	2260 034	
6-27-0	**CLUTCH RELEASE FORK RETURN SPRING**					
6-27-5	SPRING, except SD3		1	2072 855	2260 023	1820 211
	SD3		1	---- ---	1820 211	
6-35-0	**CLUTCH RELEASE CENTER SPRING**					
6-35-1	SPRING, w/225 cu. in. Eng.	6	1	2207 738	---- ---	---- ---
	w/170 cu. in. Eng.	6	1	2072 894	---- ---	---- ---
	SP1, SD1, w/225 cu. in. Eng.	6	1	---- ---	2260 728	---- ---
	SP1, SD1, Heavy Duty, SP2, SD2, w/318, 361, cu. in. Eng.		1	---- ---	2260 727	
		8	1	---- ---	---- ---	2260 739
6-35-16	SPACER		1	---- ---	2260 044	2260 044
6-35-17	NUT, Spacer		2	---- ---	2076 232	2076 232
6-38-0	**CLUTCH PEDAL**					
6-38-1	PEDAL	6	1	2207 752		
	w/Heavy Duty and Taxi	6	1	2207 757		
	w/225 cu. in. Eng.	6	1	---- ---	2260 026	
	SP1, SD1, w/Heavy Duty and Taxi, SP2, SD2, w/318 and 361 cu. in. Eng.		1	---- ---	2260 048	
	SD3, SC1, SC2	8	1	---- ---	---- ---	2260 027
6-38-3	BUSHING, Clutch Pedal	6	1	1637 779	1637 779	
	BEARING, Clutch Pedal		2	1946 377	1946 377	1946 377
6-38-14	RING, Pedal Shaft Lock	6	1	2072 831		

★ Indicates use as required. Numerals in parentheses ( ) refer to notes. Printed in U.S.A.
⊟ Indicates parts not listed in any previous parts book. Prices and specifications subject to change without notice.
* Indicates change or addition.

March 8, 1963 Supersedes May 1, 1962.

MyMopar.com

CODE	PART NAME AND DESCRIPTION	CYL.	PER CAR	VALIANT LANCER	PLYMOUTH DODGE	CHRYSLER IMPERIAL
6-38-0	**CLUTCH PEDAL - Cont'd**					
6-38-23	STOP, Pedal		1	1940 147	1940 147	1940 147
6-38-26	BRACKET, Stop		1	2072 896		
6-39-0	**CLUTCH PEDAL PAD**					
6-39-2	PAD, Black		1	1731 228	1731 228	1731 228
6-43-0	**CLUTCH PEDAL SHAFT**					
6-43-7	WASHER, Plain	6	1	2073 632		
6-43-13	SEAL		1	1730 019	1730 019	1730 019
6-50-0	**CLUTCH PEDAL ROD**					
6-50-1	ROD	6	1	2073 642		
	Heavy Duty and Taxi	6	1	2207 697		
	Except SD3		1	---- ---	2401 725	
	SD3, SC1, SC2		1	---- ---	---- ---	2260 073
6-50-6	WASHER, Dampener, Plastic		1	*2405 085	*2405 085	*2405 085
6-50-10	BOOT, Pedal Rod, 2 1/2" lgh.		1	*2266 783		
	4" lgh.		1	---- ---	*2266 818	
	5" lgh.		1	---- ---	*2260 686	
	3 1/2" lgh.		1	---- ---	---- ---	*2080 536
6-50-34	WASHER, Plain Housing Screw	6	2	6023 050	6023 050	
6-52-0	**CLUTCH TORQUE SHAFT**					
6-52-1	SHAFT	6	1	2265 930		
	w/Heavy Duty and Taxi	6	1	2265 932		
	w/225 cu. in. Eng.	6	1	---- ---	2260 678	
	SP1, SD1, w/Std. Heavy Duty Trans., Taxi and Police Cars	6	1	---- ---	*2421 354	
	SP2, w/318 cu. in. Eng., SD2, w/318, 361 cu. in. Eng.	8	1	---- ---	2421 354	
	SP2, w/361, SD2, w/318, 361 cu. in. Eng., Heavy Duty, Taxi and Police Cars	8	1	---- ---	2421 354	
	SP2, SD2, w/383 cu. in. Eng., Police Cars	8	1	---- ---	2421 354	
	SD3, SC1, w/361, SC2, w/361, 413 cu. in. Eng., w/Power Brake	8	1	---- ---	2265 937	2265 937
6-52-10	BRACKET, Torque Shaft	6	1	2265 944		
	Except SD3		1	---- ---	2260 718	
	SD3, SC1, SC2	8	1	---- ---	*2265 943	2265 943
	BRACKET, Torque Shaft, Eng. End	6	1	2260 746		
		6	1	---- ---	2260 744	
		8	1	---- ---	2260 746	
	SCREW		2	---- ---	6025 084	
	STUD, Pivot, Eng. End, SC1, SC2, SC3.		1	---- ---	1829 383	*1829 383
6-52-11	BEARING, Shaft Pivot		4	2265 938	2265 938	2265 938
6-52-12	SNAP RING, w/170, 225, 318, 361 cu. in. Eng.		1	2265 939	2265 939	2265 939
		8	1	---- ---	---- ---	2401 910
6-52-15	WASHER, Torque Shaft Pin Spring		2	*2405 085	*2405 085	*2405 085
6-52-17	SEAL, Shaft		2	2265 942	2265 942	2265 942

MyMopar.com

GROUP 7 - COOLING

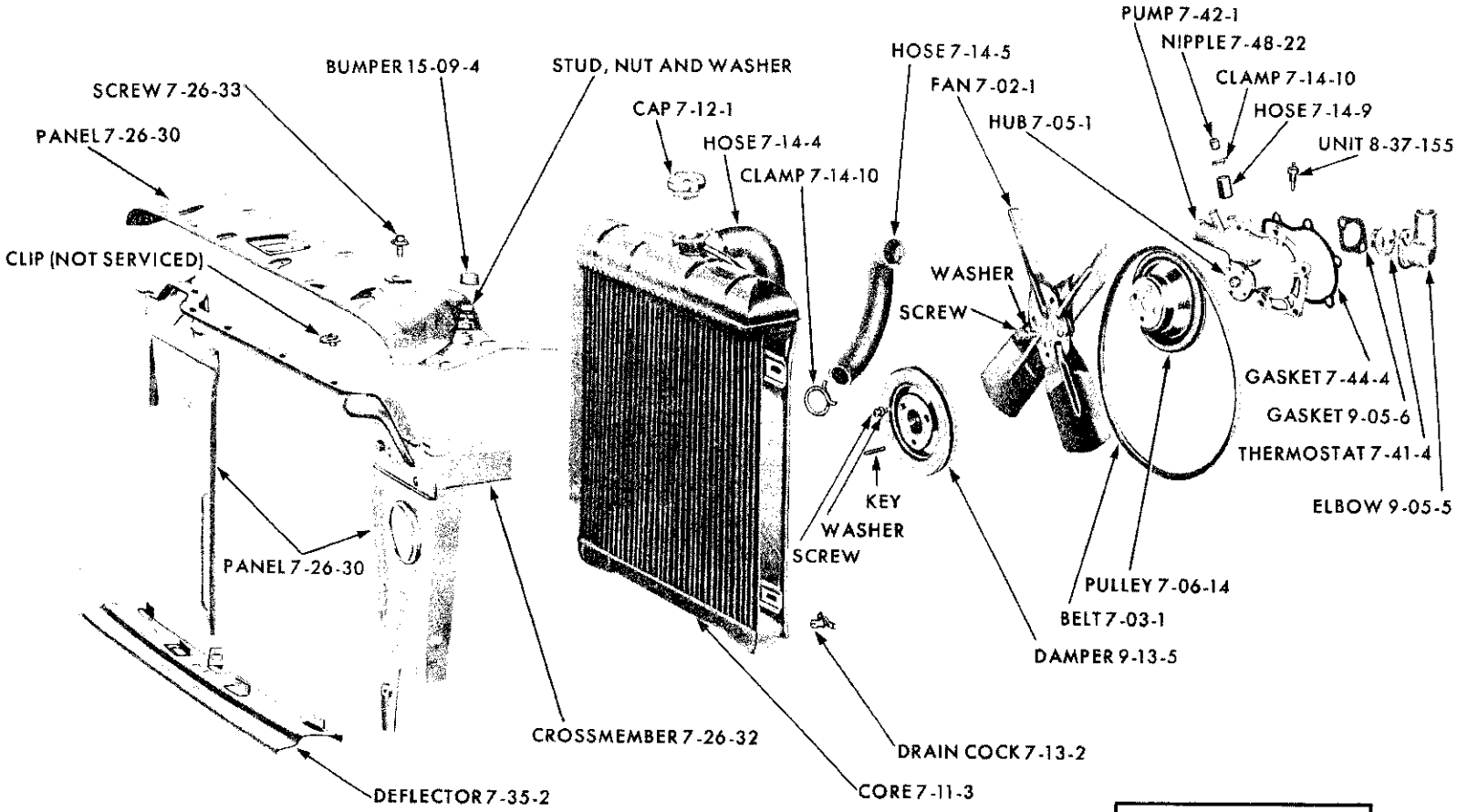

PARTS INDICATED BY NAME ONLY - ORDER BY DESCRIPTION

19x8844B

COOLING SYSTEM (6 CYLINDER) - VALIANT SV1 AND LANCER SL1

MyMopar.com

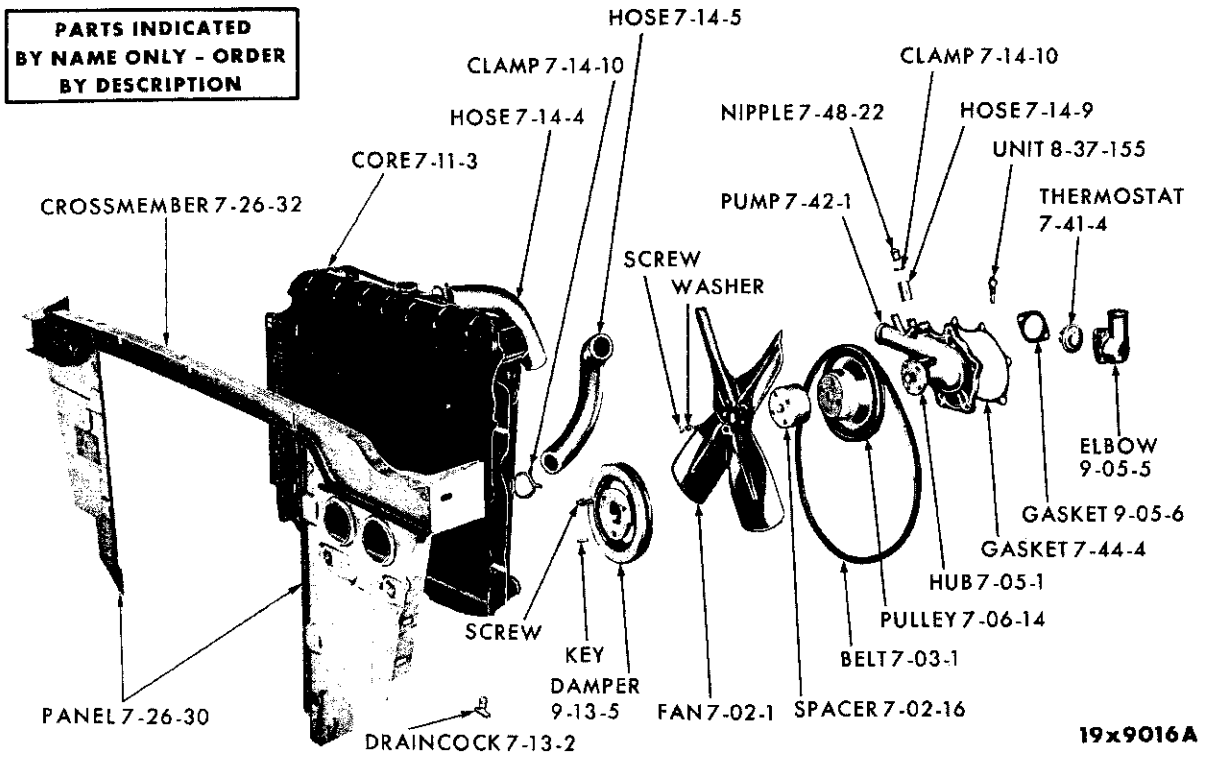

COOLING SYSTEM (6 CYLINDER) - PLYMOUTH SP1-2 AND DART SD1-2

NOTES

MyMopar.com

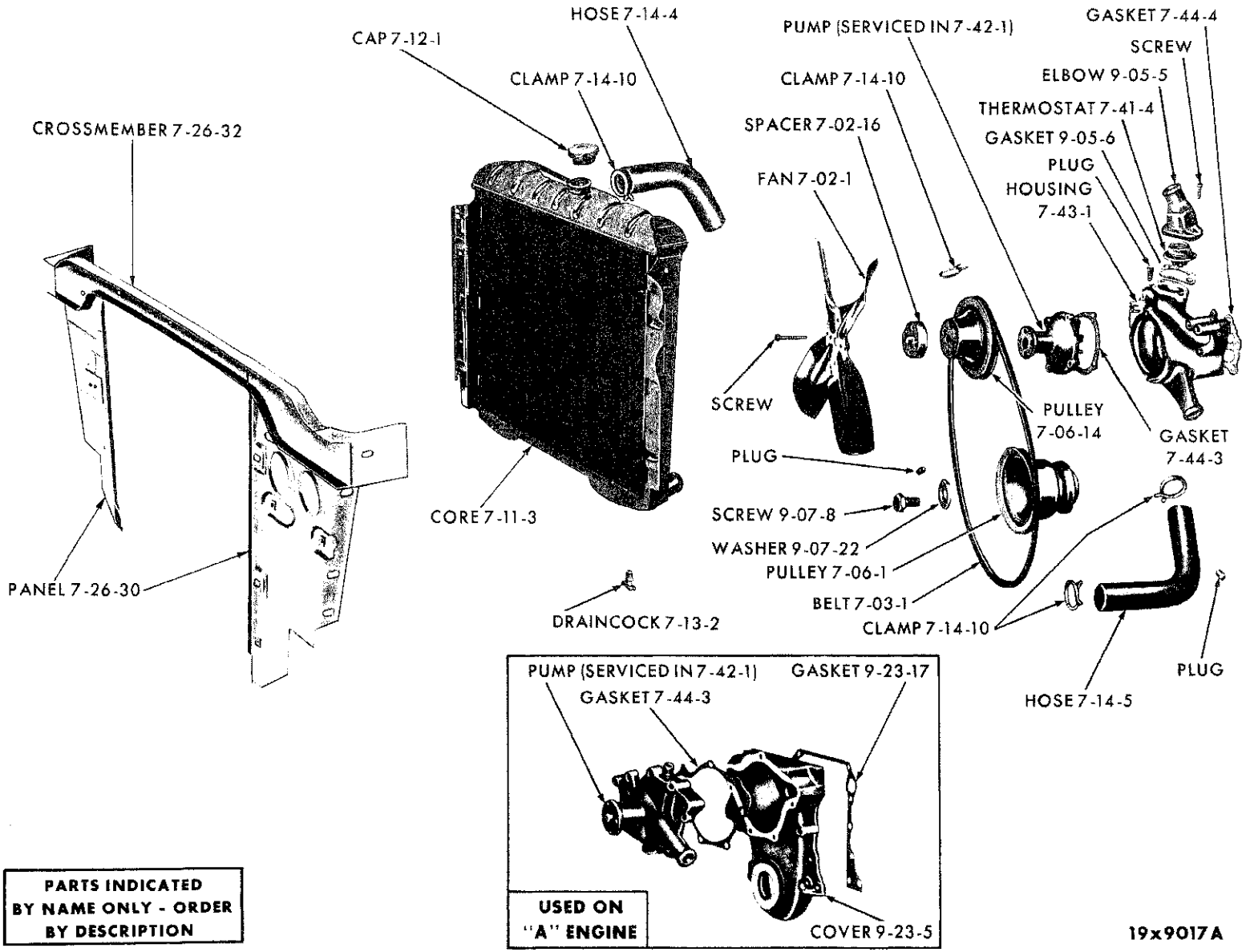

COOLING SYSTEM (V8 CYLINDER) - PLYMOUTH SP1-2 AND DART SD1-2

MyMopar.com

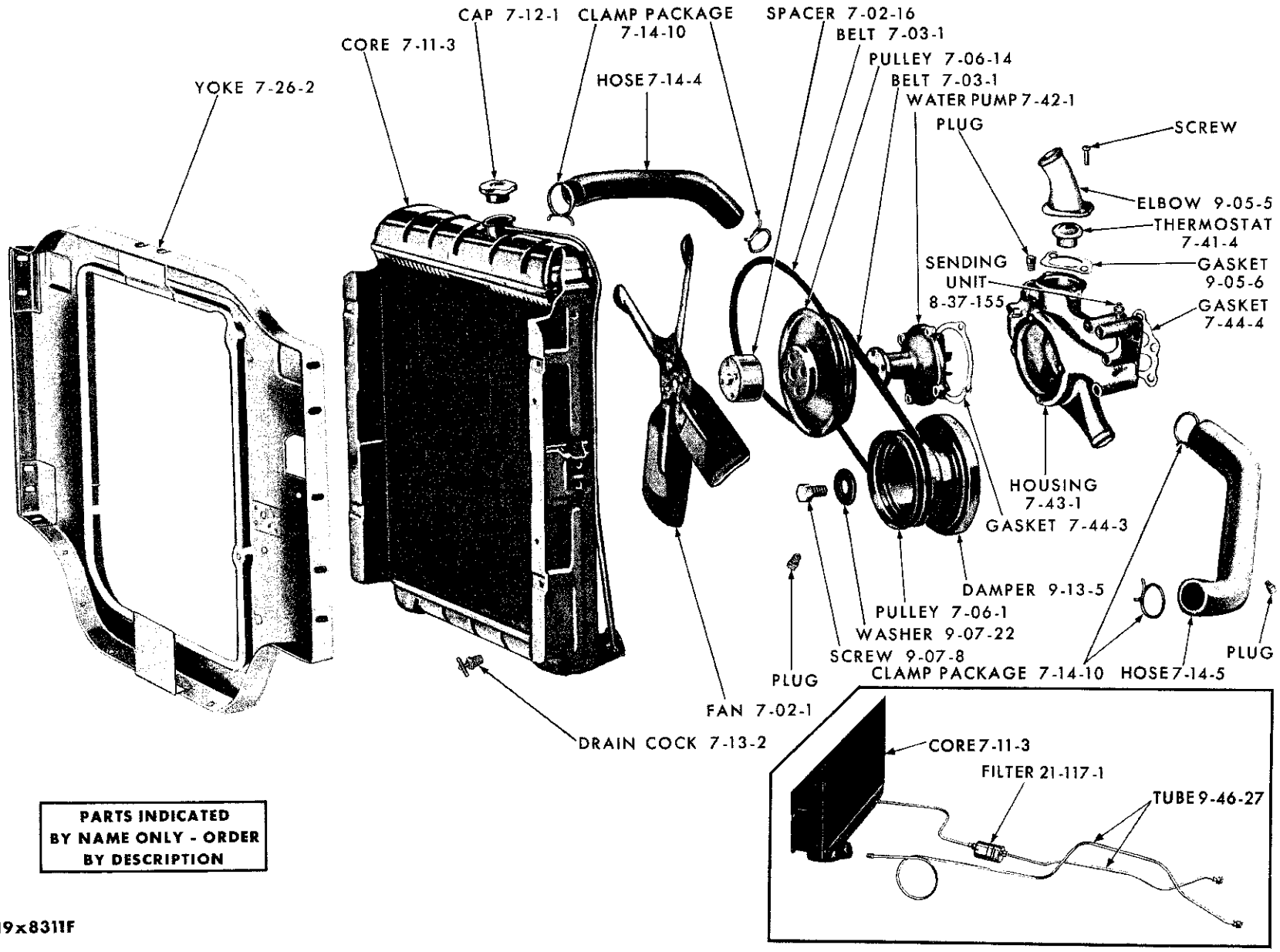

PARTS INDICATED BY NAME ONLY - ORDER BY DESCRIPTION

19x8311F

COOLING SYSTEM - CHRYSLER SC1-2-3 AND IMPERIAL SY1

MyMopar.com

CODE	PART NAME AND DESCRIPTION	PER CAR	VALIANT LANCER	PLYMOUTH DODGE	CHRYSLER IMPERIAL

NOTES

★ Indicates use as required. Numerals in parentheses ( ) refer to notes. Printed in U.S.A.
⊟ Indicates parts not listed in any previous parts book. Prices and specifications subject to change without notice.

MyMopar.com

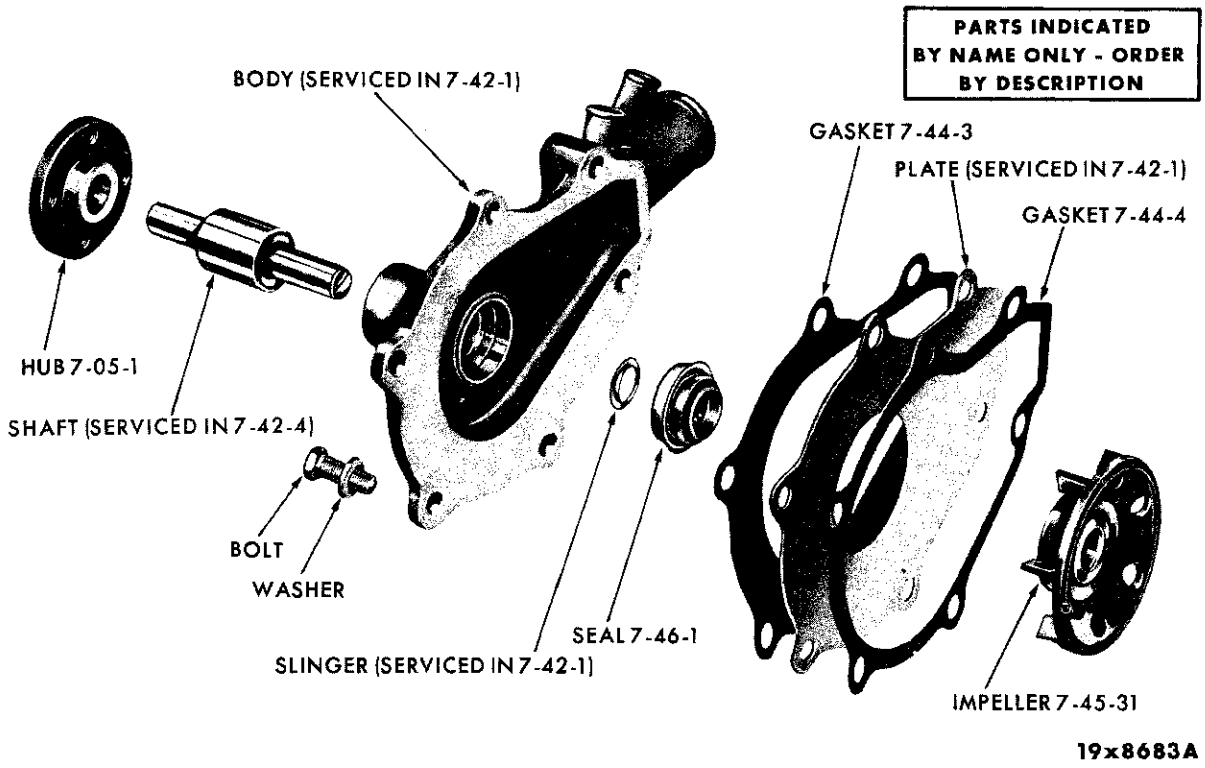

WATER PUMP - 6 CYLINDER

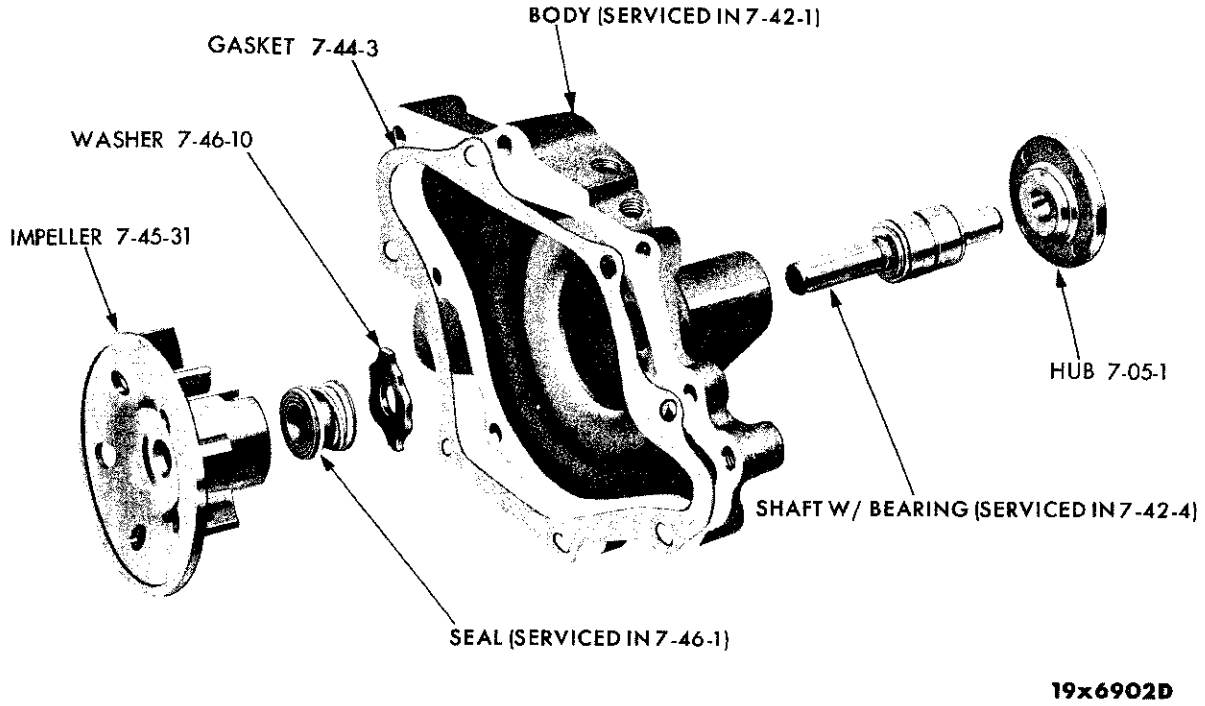

WATER PUMP - USED WITH 318 CU. IN. ENGINE

MyMopar.com

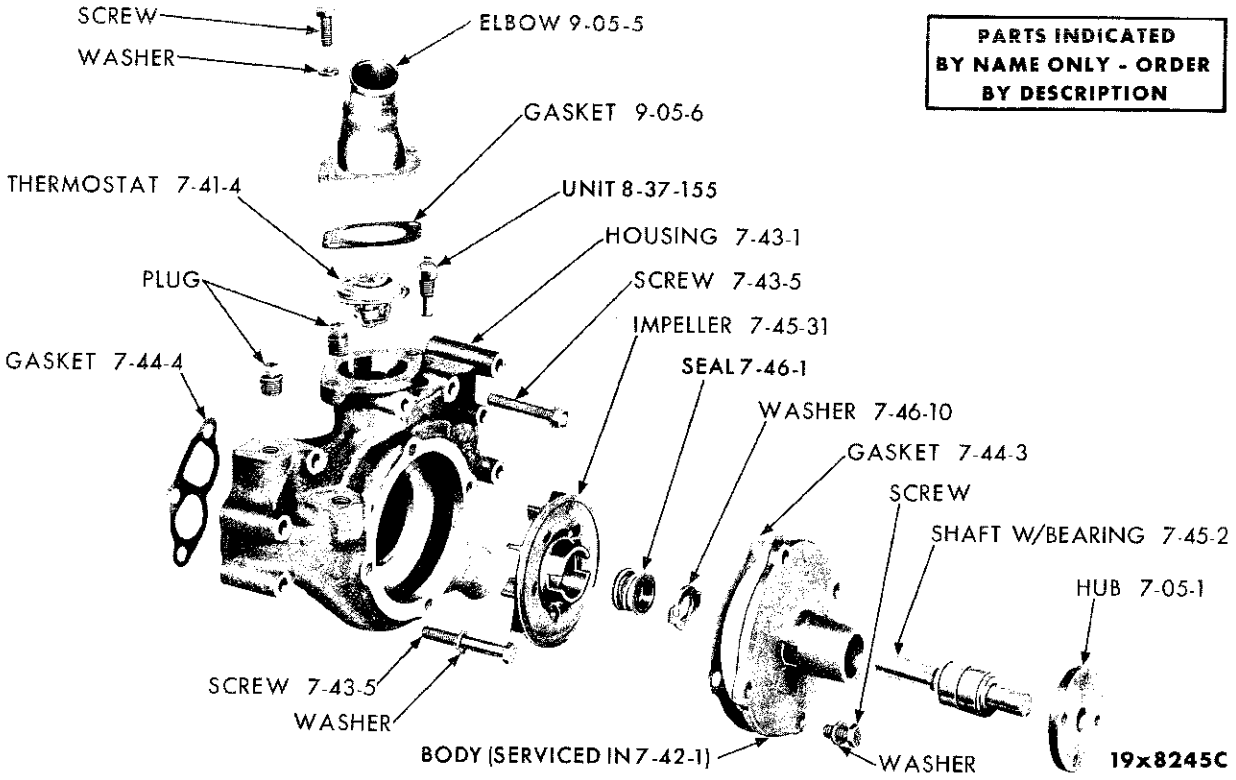

WATER PUMP - USED WITH 361, 383 AND 413 CU. IN. ENGINE

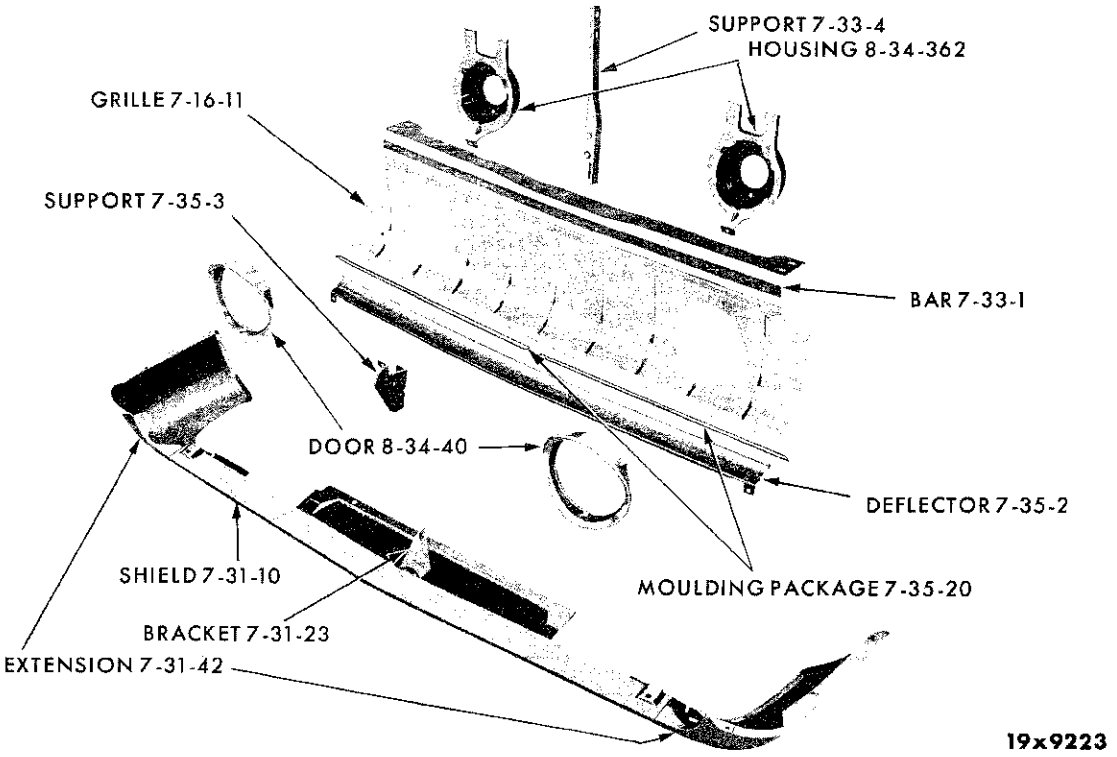

GRILLE - PLYMOUTH SP1-2

MyMopar.com

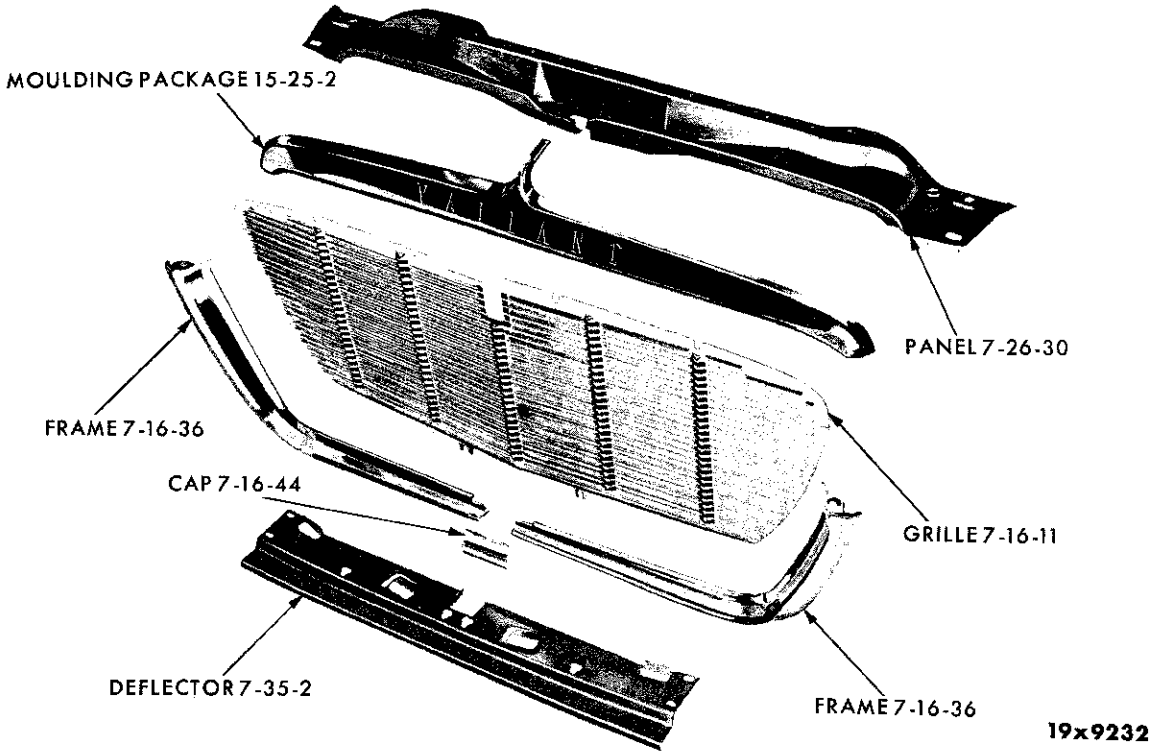

GRILLE - VALIANT SV1

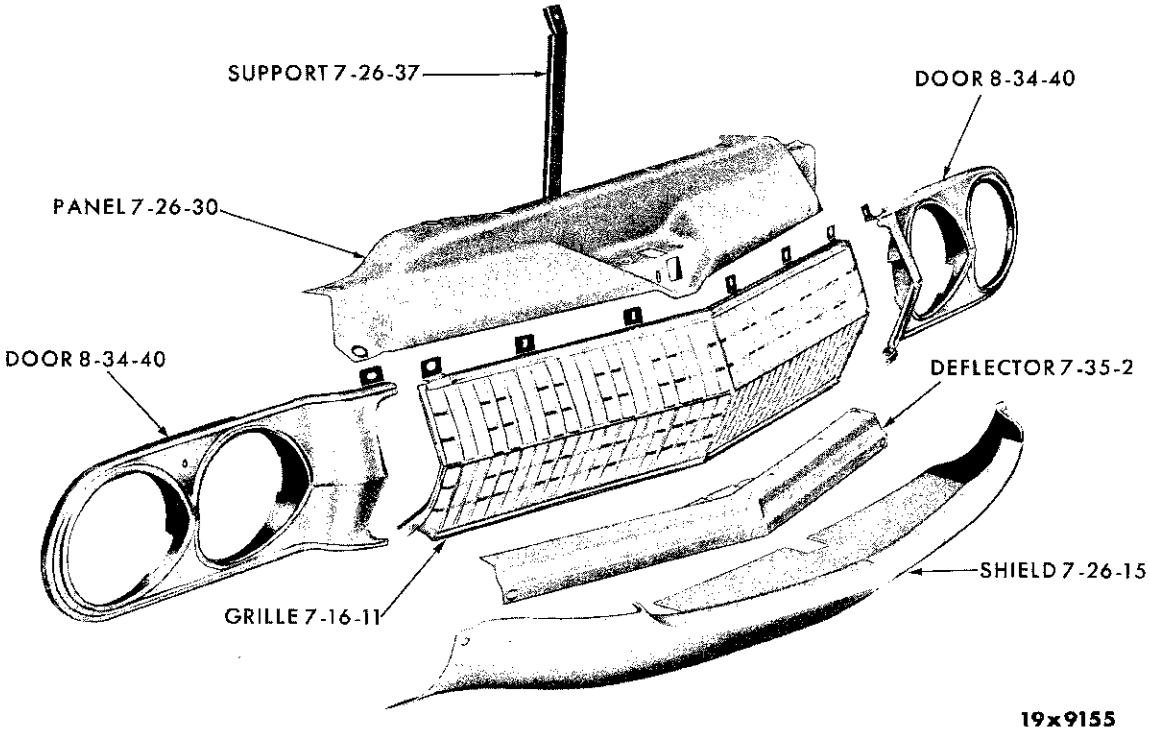

GRILLE - LANCER SL1

MyMopar.com

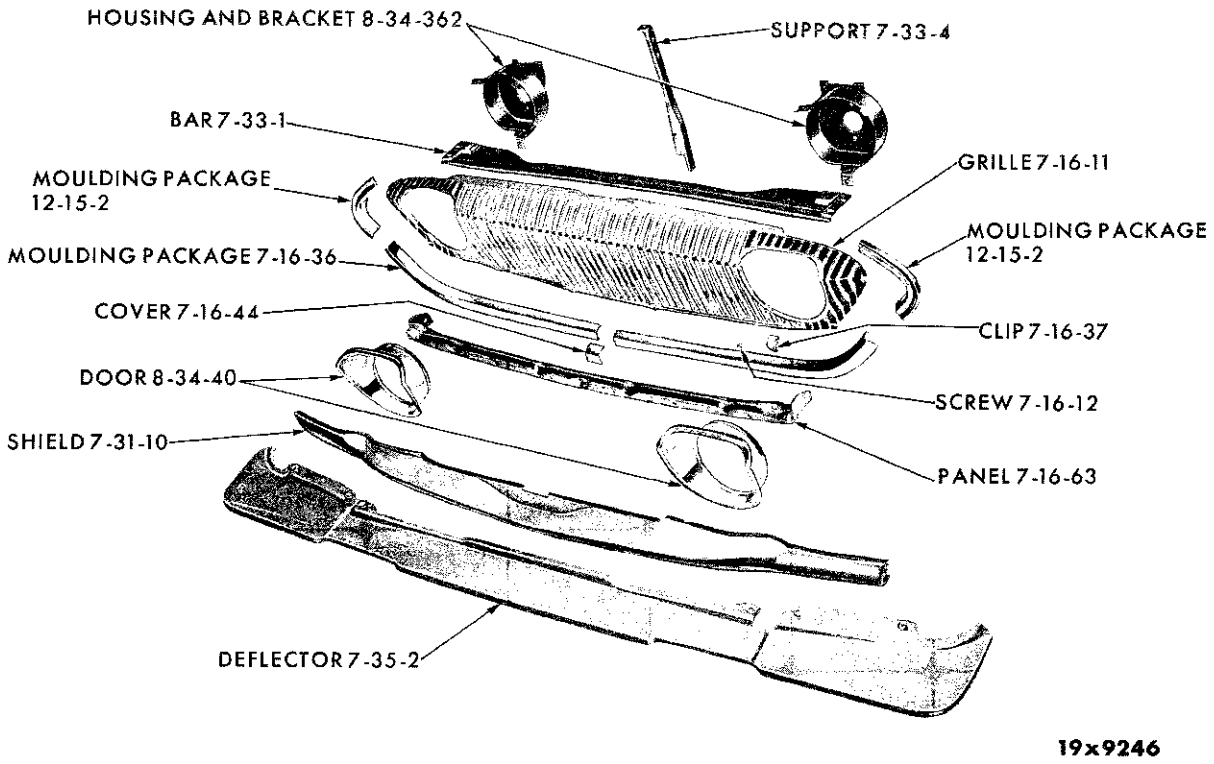

GRILLE - DODGE SD1-2

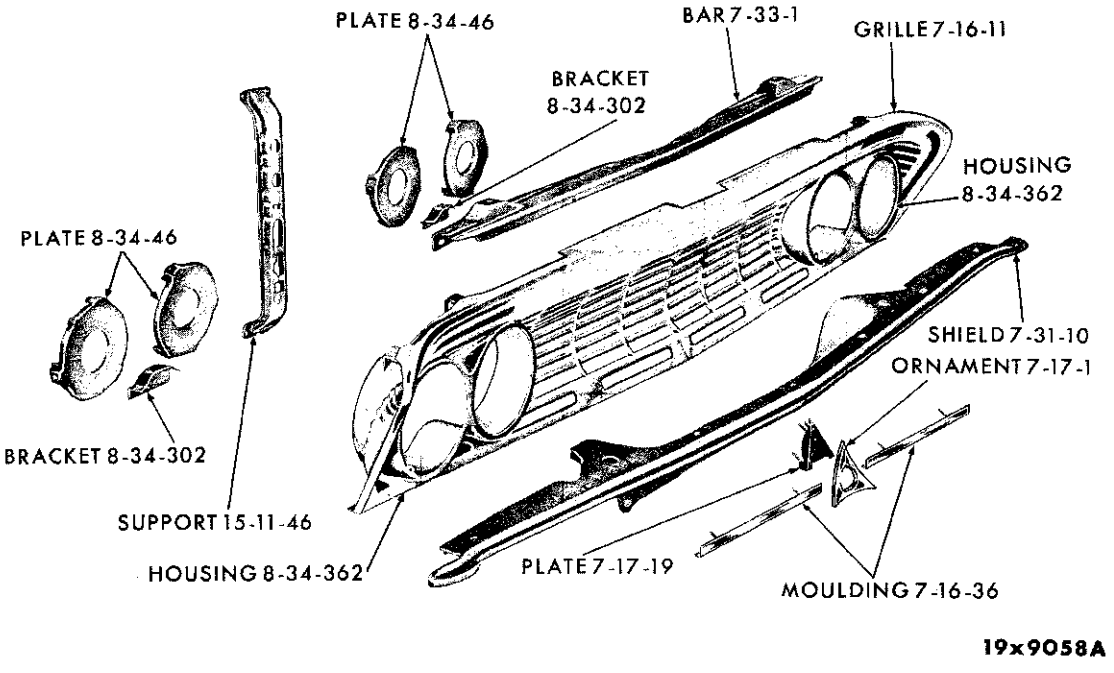

GRILLE - DODGE SD3

MyMopar.com

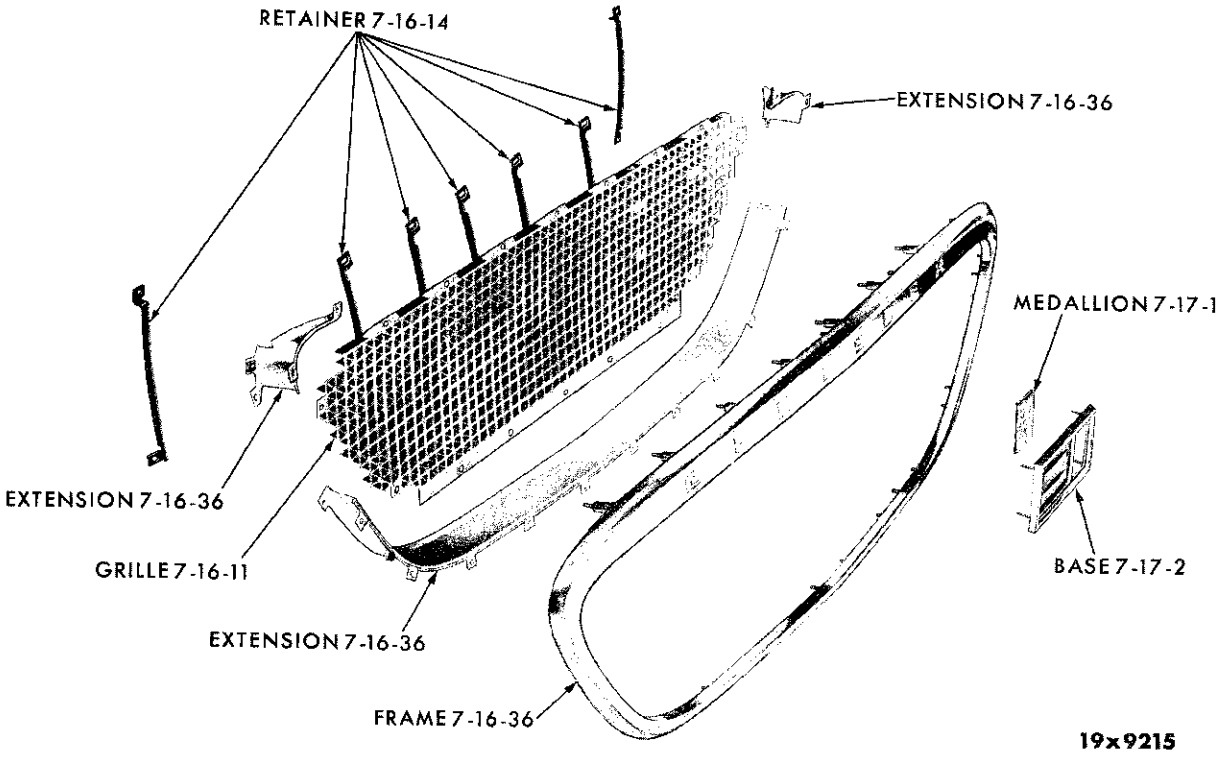

GRILLE - CHRYSLER SC1

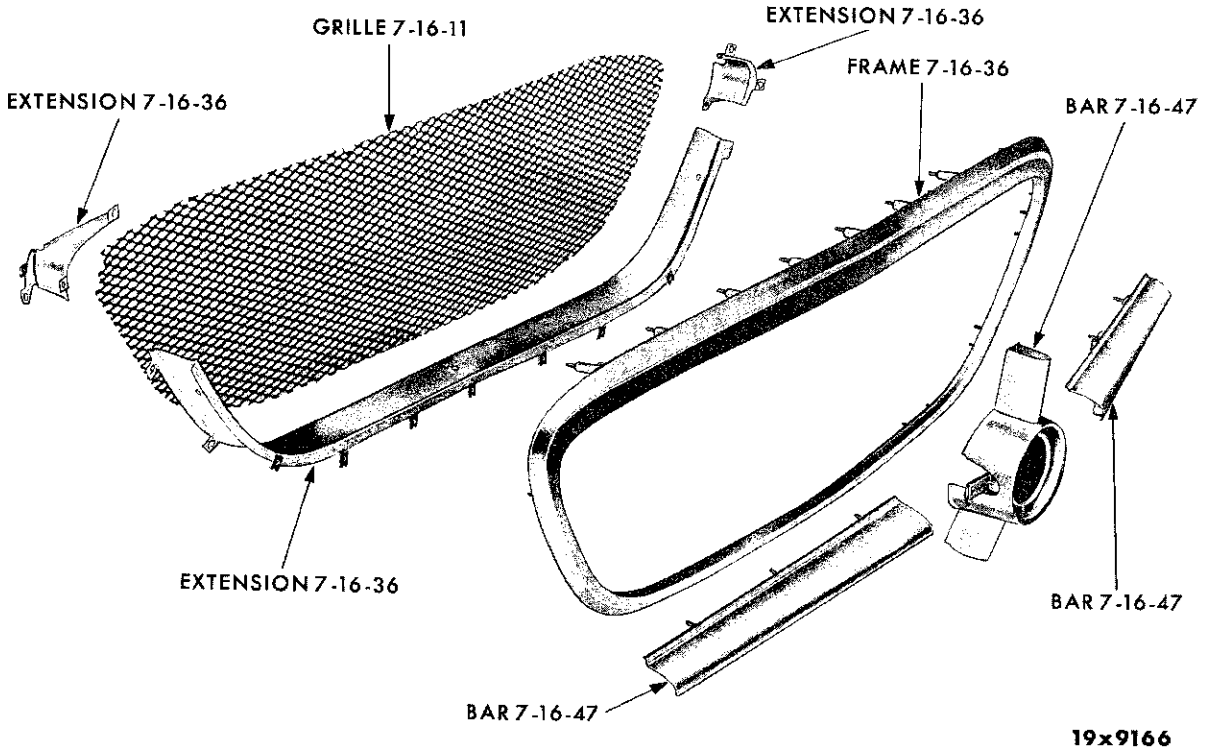

GRILLE - CHRYSLER SC2-3

MyMopar.com

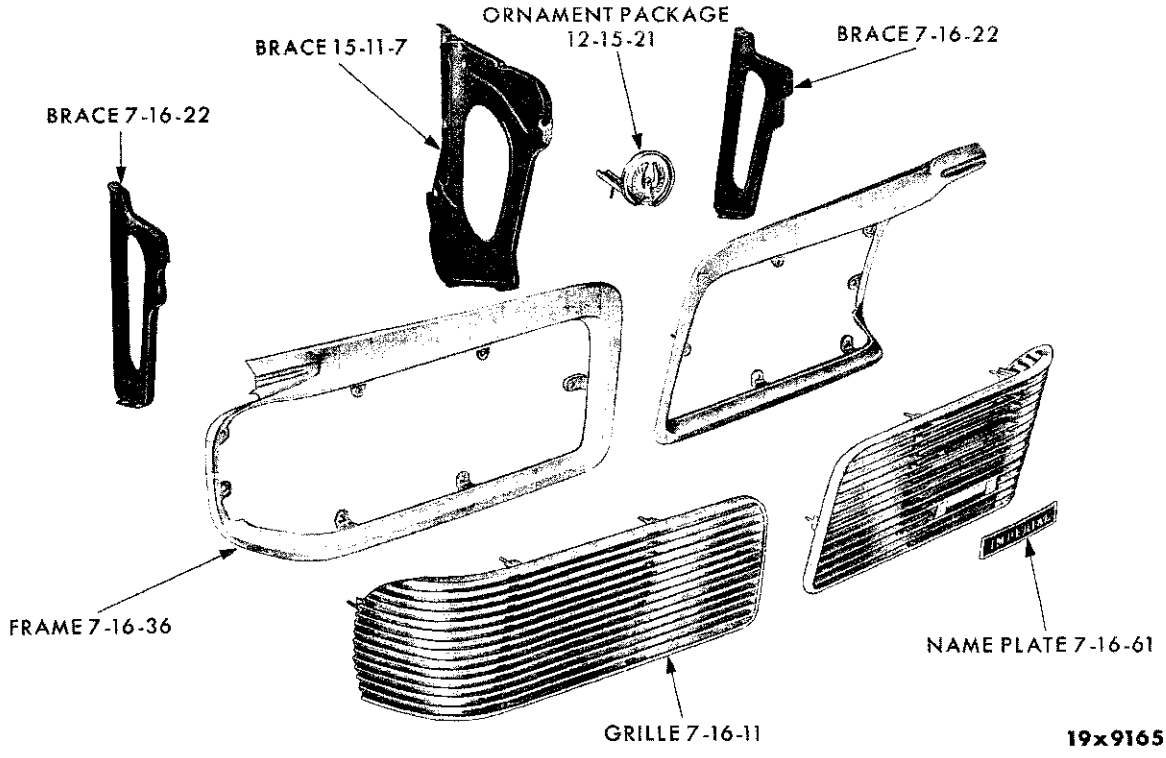

GRILLE - IMPERIAL SY1

NOTES

MyMopar.com

Figure 1

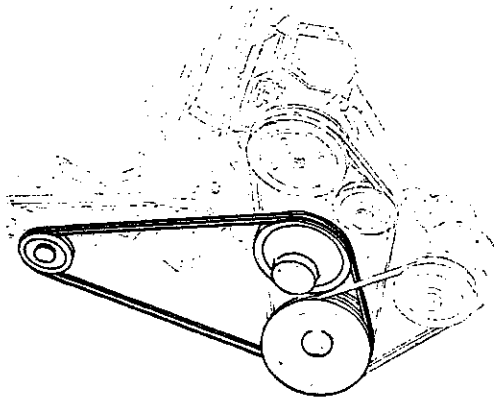

Figure 2

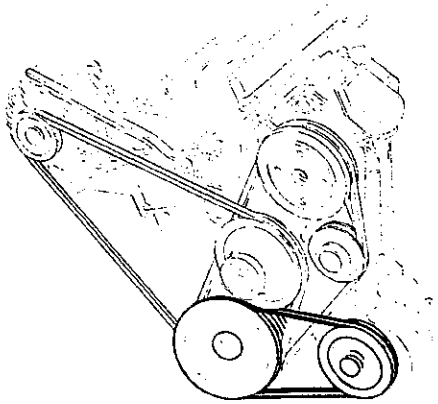

Figure 3

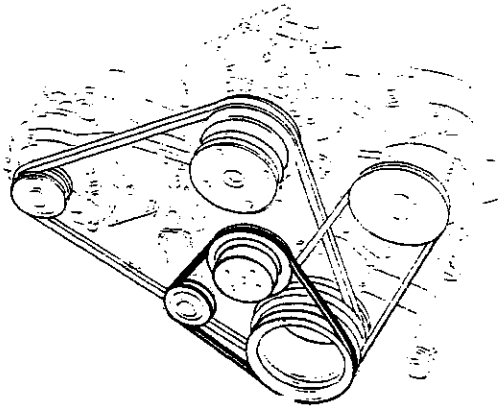

Figure 4

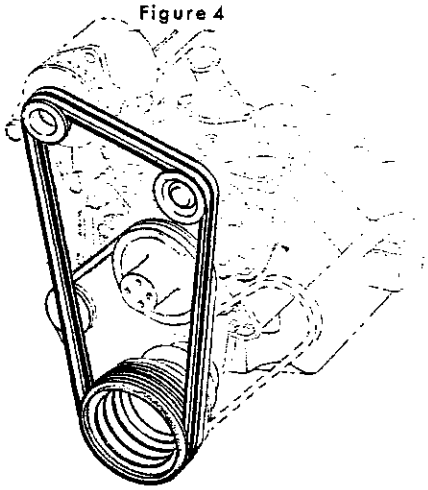

Figure 5

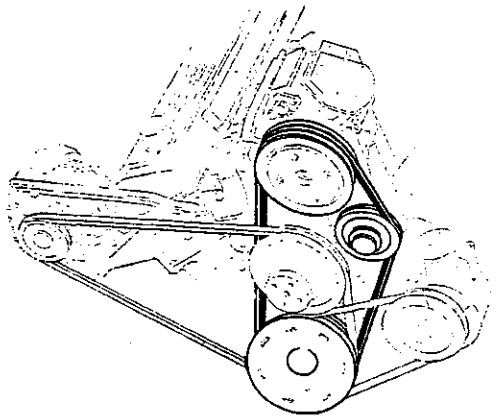

Figure 6

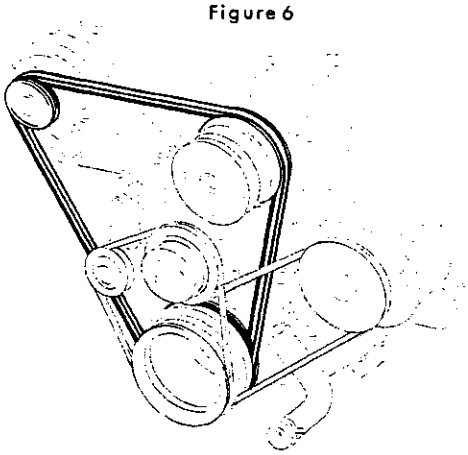

19x9214

FAN BELT CHART

MyMopar.com

CODE	PART NAME AND DESCRIPTION	CYL.	PER CAR	VALIANT LANCER	PLYMOUTH DODGE	CHRYSLER IMPERIAL
7-03-0	**FAN AND RELATED DRIVE BELTS**					
7-03-1	BELT					
	ENGINE TO ALTERNATOR TO FAN (see Fig. 1)					
	w/170 cu. in. Engine, Std.	6	1	1673 649		
	w/225 cu. in. Engine, Std.	6	1	1821 138	1821 138	
	Dual Belt, Police and Taxi, w/225 cu. in. Engine	6	1	---- ---	2264 463	
	w/318 cu. in. Engine, Std.	8	1	---- ---	2268 242	
	w/361 and 383 cu. in. Engine	8	1	---- ---	1737 925	1737 925
	w/413 cu. in. Engine	8	1	---- ---	*1324 963	1533 121
	ENGINE TO STEERING PUMP (see Fig. 2)					
	w/170 cu. in. Engine, Std.	6	1	1821 684		
	w/225 cu. in. Engine, Std.	6	1	---- ---	1327 471	
	w/318 cu. in. Engine, w/2196 082 Pump	8	1	---- ---	2121 972	
	w/318 cu. in. Engine, w/2240 620 Pump	8	1	---- ---	1854 895	
	w/361 cu. in. Engine	8	1	---- ---	1827 431	1827 431
	w/383 and 413 cu. in. Engine	8	1	---- ---	---- ---	2129 277
	ENGINE TO FAN (see Fig. 3)					
	w/model G Air Conditioning, Engine to Fan to Strg. Pump	6	1	2202 876		
	w/361, 383 and 413 cu. in. Engine, w/Air Conditioning	8	1	---- ---	1558 058	1558 058
	w/318 cu. in. Engine, Police	8	1	---- ---	1821 684	
	w/361 cu. in. Engine, Police	8	1	---- ---	1327 471	1327 471
	ENGINE TO ALTERNATOR (see Fig. 4)					
	Dual Belt, w/318 cu. in. Engine. Police	8	1	---- ---	1673 650	
	Dual Belt, w/361 and 383 cu. in. Engine, Police	8	1	---- ---	2121 250	2121 250
	w/Model G Air Conditioning		1	1551 005	1533 532	1533 532
	ENGINE TO COMPRESSOR (see Fig. 5)					
	w/Model G Air Conditioning, w/170 cu. in. Engine	6	1	*2202 769		
	w/225 and 318 cu. in. Engine, w/Air Conditioning		1	---- ---	2268 222	
	w/Model G Air Conditioning, w/361, 383 and 413 cu. in. Engine	8	1	---- ---	1825 903	1825 903
	ENGINE TO ALTERNATOR TO COMPRESSOR (see Fig. 6)					
	w/361 and 383 cu. in. Engine, w/Air Conditioning	8	1	---- ---	1947 132	1947 132
	w/413 cu. in. Engine, w/Air Conditioning	8	1	---- ---	---- ---	2129 284

NOTES

MyMopar.com

CODE	PART NAME AND DESCRIPTION	CYL.	PER CAR	VALIANT LANCER	PLYMOUTH DODGE	CHRYSLER IMPERIAL

NOTES

★ Indicates use as required. Numerals in parentheses ( ) refer to notes. Printed in U.S.A.
⊟ Indicates parts not listed in any previous parts book. Prices and specifications subject to change without notice.
September 15, 1961.

MyMopar.com

CODE	PART NAME AND DESCRIPTION	CYL.	PER CAR	VALIANT LANCER	PLYMOUTH DODGE	CHRYSLER IMPERIAL
7-02-0	**FAN ASSEMBLY**					
7-02-1	FAN, w/o Air Cond.	6	1	2121 971	1947 907	
	w/Air Cond.	6	1	---- ---	2265 034	
	w/o Air Cond.	8	1	---- ---	2265 034	2265 034
	w/Air Cond.	8	1	---- ---	2120 208	
	w/Air Cond., SP2, SD2, SD3, w/361 cu. in. Engine, SC1, SC2	8	1	---- ---	2121 013	2121 013
	SC3, SY1	8	1	---- ---	---- ---	2121 014
	w/o Air Cond., Heavy Duty, SC1, SC2, SC3	8	1	---- ---	2120 208	2120 208
	SC2 w/413 cu. in. Engine	8	1	---- ---	---- ---	2121 013
	w/Model G Air Conditioning	6	1	2206 356	1735 941	
	w/Model G Air Conditioning, SP2, SD2, w/361, 383 and 413 cu. in. Engine	8	1	---- ---	1985 513	1985 513
7-02-16	SPACER, w/o Air Cond.	6	1	---- ---	1730 155	
	w/Air Cond.	6	1	2003 059	1825 932	
		8	1	---- ---	2265 036	
	SP2, SD2, SD3, w/361 cu. in. Engine, SC1, SC2	8	1	---- ---	1730 155	1730 155
	SC3, SY1	8	1	---- ---	---- ---	2120 510
7-03-0	**FAN AND RELATED DRIVE BELTS**					
	NOTE: See Illustration in Front of Group 7.					
7-04-0	**FAN AND ALTERNATOR IDLER PULLEY**					
7-04-1	PULLEY, Alternator Idler, SC1 Police	8	1	---- ---	1859 770	1859 770
	Fan Idler	8	1	---- ---	2240 397	2240 397
7-04-5	BRACKET, Alternator Idler Pulley, SC1 Police, SC2	8	1	---- ---	2264 517	2264 517
	Alternator Idler Pulley Spacer, SP2, SD2	8	1	---- ---	1945 384	
	Fan Idler Pulley	8	1	---- ---	2129 666	
	Fan Idler Pulley, SP2, SD2, SD3, w/361 cu. in. Engine	8	1	---- ---	2129 667	2129 667
7-04-6	SCREW, Alternator Idler Pulley Bracket, SC1, SC2.	8	3	---- ---	6022 258	6022 258
	Adjusting	8	1	---- ---	2206 300	
7-04-10	SPACER, Alternator Idler Pulley Bracket, SC1 Police, SC2	8	1	---- ---	2202 380	2203 195
	Fan Idler Pulley Bracket	8	1	---- ---	1851 608	1851 608
7-04-13	BRACKET, Idler Pulley Spacer, w/318 cu. in. Engine	8	1	---- ---	*1945 384	
7-04-16	SPACER, Alternator Idler Pulley Bearing, SC1 Police, SC2	8	1	---- ---	2120 520	2120 520
7-05-0	**FAN PULLEY HUB**					
7-05-1	HUB		1	2129 265	2129 265	2129 265
7-06-0	**FAN DRIVE AND DRIVEN PULLEYS**					
7-06-1	PULLEY, Power Strg. Pump Drive	6	1	2202 794	2205 518	
	Fan and Alternator Drive, w/Dual Belt	6	1	2264 449	2264 449	
	Compressor Drive, w/Air Cond.	6	1	2202 794	2202 794	
	Fan and Alternator Drive, w/Std. Trans., w/o Power Strg.	8	1	---- ---	1821 411	
	Fan and Alternator Drive, w/Std. Trans., w/Power Strg.	8	1	---- ---	1855 152	
	Fan and Alternator Drive, w/Auto. Trans., w/o Power Strg., use with Pulley Hub	8	1	---- ---	2268 257	
	Fan and Alternator Drive, w/Auto. Trans., w/o Power Strg., use with Vibration Damper	8	1	---- ---	1821 411	
	Fan and Alternator Drive, w/Auto. Trans., w/Power Strg., use with Pulley Hub	8	1	---- ---	2268 258	

★ Indicates use as required. Numerals in parentheses ( ) refer to notes. Printed in U.S.A.
⊟ Indicates parts not listed in any previous parts book. Prices and specifications subject to change without notice.
* Indicates change or addition

March 8, 1963 Supersedes May 1, 1962.

MyMopar.com

CODE	PART NAME AND DESCRIPTION	CYL.	PER CAR	VALIANT LANCER	PLYMOUTH DODGE	CHRYSLER IMPERIAL
7-06-0	**FAN DRIVE AND DRIVEN PULLEYS - Cont'd**					
7-06-1	PULLEY - Cont'd					
	Fan and Alternator Drive, w/Auto. Trans., w/Power Strg., use with Vibration Damper	8	1	---- ---	1855 152	
	Fan and Alternator and Compressor Drive, w/Air Conditioning, use with Pulley Hub	8	1	---- ---	2264 379	
	Fan and Alternator and Compressor Drive, w/Air Conditioning, use with Vibration Damper	8	1	---- ---	*2402 730	
	Fan and Alternator Drive, w/Dual Belt	8	1	---- ---	1859 580	
	Fan and Alternator Drive, w/o Power Strg., SP2, SD2, SD3, w/361 cu. in. Engine, SC1, SC2	8	1	---- ---	1821 449	1821 449
	Fan and Alternator Drive, w/Power Strg., SP2, SD2, SD3, w/361 cu. in. Engine, SC1, SC2, SC3 SY1	8	1	---- ---	1826 053	1826 053
	Fan and Alternator Drive, w/Dual Belt, SP2, SD2, SD3, w/361 cu. in. Engine, SC1, SC2	8	1	---- ---	1859 252	1859 252
	Fan and Alternator Drive, w/Air Cond., SP2, SD2, w/361 cu. in. Engine, SC1, SC2	8	1	---- ---	1859 252	1859 252
	Fan and Alternator Drive, w/Air Cond., SC2-300H, w/413 cu. in. Engine, SC3, SY1	8	1	---- ---	---- ---	*2128 545
	Fan and Compressor Drive, w/Model G Air Conditioning, SP2, SD2, w/361 cu. in. Engine	8	1	---- ---	1999 181	1999 181
	Fan and Alternator Drive, w/413 cu. in. Engine	8	1	---- ---	2402 294	
7-06-3	HUB, Drive Pulley, w/Air Cond.	8	1	---- ---	1733 805	
	w/Dual Belt	8	1	---- ---	1733 805	
7-06-14	PULLEY, Fan Driven	6	1	2202 666	2202 666	
	w/Dual Belt	6	1	2264 450	2264 450	
	w/ or w/o Air Conditioning	8	1	---- ---	1852 582	
	w/o Air Cond. SP2, SD2, SD3, w/361 cu. in. Engine	8	1	---- ---	1821 452	1821 452
	w/Air Cond. SP2, SD2, SD3, w/361 cu. in. Engine	8	1	---- ---	2121 016	2121 016
	w/Dual Belt, SP2, SD2, w/361 cu. in. Engine, SC1 Police	8	1	---- ---	1851 248	1851 248
	w/Model G. Air Conditioning, SP2, SD2, w/361 cu. in. Engine	8	1	---- ---	1999 180	1999 180
7-07-0	**FAN FLUID DRIVE UNIT**					
7-07-1	UNIT, Fan Fluid Drive, SP2, SD2, w/361 cu. in. Engine, SC1, SC2, w/Air Cond.	8	1	---- ---	2268 903	*2421 130
	SD3	8	1	---- ---	2421 130	
	SC2 w/413 cu. in. Engine, w/o Air Cond.	8	1	---- ---	---- ---	*2421 131
	SC2 w/413 cu. in. Engine, SC3, SY1, w/Air Cond.	8	1	---- ---	---- ---	*2421 131
7-08-0	**RADIATOR CORE FAN SHROUD**					
7-08-2	SHROUD, Fan, w/Air Conditioning	6	2	---- ---	1686 463	
	w/Air Cond., Upper, SC1, SC2		1	1999 171	1902 720	1902 720
	Lower, SC1, SC2		1	1999 172	1903 600	1903 600
	Upper, SC3, SY1	8	1	---- ---	---- ---	1686 412
	Lower, SC3, SY1	8	1	---- ---	---- ---	1686 414
	Upper, SP2, SD2, w/361 cu. in. Engine	8	1	---- ---	2099 863	
	Lower, SP2, SD2, w/361 cu. in. Engine	8	1	---- ---	2099 866	
7-08-7	BUMPER, Fan Shroud, SC3, SY1	8	4	---- ---	---- ---	1624 506
7-08-9	FILLER, Fan Shroud to Core, w/Air Cond., Upper	6	2	---- ---	2099 962	
	Lower	6	1	---- ---	2099 963	
7-08-13	BRACKET, Fan Shroud, Right	6	1	---- ---	2099 944	
	Left	6	1	---- ---	2099 945	
		8	4	---- ---	2099 555	

MyMopar.com

CODE	PART NAME AND DESCRIPTION	CYL.	PER CAR	VALIANT LANCER	PLYMOUTH DODGE	CHRYSLER IMPERIAL
7-08-0	**RADIATOR CORE FAN SHROUD - Cont'd**					
7-08-13	BRACKET - Cont'd					
	Right, SC3, SY1	8	1	---- ---	---- ---	1686 451
	Left, SC3, SY1	8	1	---- ---	---- ---	1686 453
7-08-15	SCREW	6	4	---- ---	6022 201	
			★	---- ---	6023 092	
	SC3, SY1	8	8	---- ---	---- ---	6022 506
	STUD, SC1, SC2	8	2	---- ---	*1641 903	*1641 903
7-08-16	NUT	6	2	1740 550	6000 124	
		8	4	---- ---	6000 124	
	SC3, SY1	8	4	---- ---	---- ---	6010 006

CODE	PART NAME AND DESCRIPTION	CYL.	PER CAR	STANDARD	HIGH ALTITUDE	W/AIR COND.
7-11-0	**RADIATOR CORE**					
7-11-3	CORE, SV1, SL1	6	1	*2099 880		
	SV1, SL1, w/225 cu. in. Engine	6	1	2099 878		
	SV1, SL1	6	1	---- ---	2099 878	
	SP1, SD1	6	1	2099 889	2099 889	2099 916
	SP2, SD2	8	1	2099 896	2099 894	2099 894
	SP2, SD2, w/361 cu. in. Engine	8	1	2099 899	2099 899	2099 899
	SD3, SC1, SC2	8	1	2099 901	2099 902	2099 903
	SC2 w/413 cu. in. Engine	8	1	2099 905	---- ---	2099 917
	SC3, SY1	8	1	2099 908	2099 907	2099 907

CODE	PART NAME AND DESCRIPTION	CYL.	PER CAR	VALIANT LANCER	PLYMOUTH DODGE	CHRYSLER IMPERIAL
7-11-4	SCREW, to Yoke		4	6022 332	6022 308	6022 308
7-12-0	**RADIATOR FILLER CAP**					
7-12-1	CAP		1	1686 107	1686 107	1686 107
7-13-0	**RADIATOR DRAIN COCK**					
7-13-2	DRAIN COCK, SC1, SC2		1	1686 198	1686 198	1686 198
	SC3, SY1	8	1	---- ---	---- ---	103 647
7-14-0	**RADIATOR HOSE**					
7-14-4	HOSE, Inlet, Upper, w/o Power Strg.	8	1	1881 804		
	w/Power Strg.	6	1	1881 805		
	w/225 cu. in. Engine	6	1	1881 812		
	SP1, SD1, Taxi	6	1	---- ---	1881 805	
	SP1, SD1, except Taxi	6	1	---- ---	1881 804	
	w/ or w/o Air Cond., SP2, SD2	8	1	---- ---	1881 806	
	w/o Air Cond., SP2, SD2, w/361 cu. in. Engine	8	1	---- ---	1881 806	
	w/o Air Conditioning, SD3	8	1	---- ---	1881 804	1881 804
	w/Air Cond., SP2, SD2, SD3, w/361 cu. in. Engine	8	1	---- ---	1881 806	1881 806
	w/Model G Air Conditioning, SP2, SD2, w/361 cu. in. Engine		1	1881 805	1881 805	1881 805
	w/ L-N Alternator, SC1, SC2	8	1	---- ---	---- ---	2268 986
7-14-5	HOSE, Outlet, Lower	6	1	2268 614		
		6	1	---- ---	2268 598	
		8	1	---- ---	1881 805	
	SP2, SD2, SD3, w/361 cu. in. Engine, SC1, SC2	8	1	---- ---	2196 934	2196 934
	SC3, SY1	8	1	---- ---	---- ---	1881 810
7-14-9	HOSE, Water Pump By-Pass, 50 foot roll	6	★	1315 466	1315 466	
		8	1	---- ---	1730 366	

★ Indicates use as required. Numerals in parentheses ( ) refer to notes. Printed in U.S.A.
⊟ Indicates parts not listed in any previous parts book. Prices and specifications subject to change without notice.
* Indicates change or addition.

March 8, 1963 Supersedes May 1, 1962.

MyMopar.com

CODE	PART NAME AND DESCRIPTION	CYL.	PER CAR	VALIANT LANCER	PLYMOUTH DODGE	CHRYSLER IMPERIAL
7-14-0	**RADIATOR HOSE - Cont'd**					
7-14-10	CLAMP PACKAGE, Radiator Hose, Small, 3/4" to 1 1/4"		★	1450 499	1450 499	1450 499
	Large, 1 1/2" to 2 3/4"		★	1450 500	1450 500	1450 500
7-14-31	HOSE, Radiator Overflow (sold by the inch)		★	*1904 950	*1904 950	*1904 950
7-16-0	**RADIATOR GRILLE**					
7-16-11	GRILLE, SV1-L, SV1-H	6	1	2242 165		
	SV1-P	6	1	2276 586		
	SL1-L, SL1-H	6	1	2242 153		
	SL1-P	6	1	2099 987		
	SP1-L, SP1-M, SP1-H, SP2-L, SP2-M, SP2-H		1	---- ---	2099 331	
	SP2-P	8	1	---- ---	2276 645	
	SD1-L, SD1-M, SD1-H, SD2-L, SD2-M, SD2-H		1	---- ---	2099 478	
	SD2-P	8	1	---- ---	2276 548	
	SD3	8	1	---- ---	2417 180	
	SC1	8	1	---- ---	---- ---	2099 657
	SC2, SC3	8	1	---- ---	---- ---	2099 672
	Right, SY1	8	1	---- ---	---- ---	2099 630
	Left, SY1	8	1	---- ---	---- ---	2099 631
7-16-12	SCREW, to Yoke, SL1	6	★	6022 951		
	To Stone Deflector Support, SP1, SP2		1	---- ---	6022 506	
	Grille Panel to Fender, SD1, SD2		4	---- ---	6022 506	
	Grille Attaching, SD1, SD2		★	---- ---	6022 951	6025 085
	Center Panel to Fender, SC1, SC2, SC3	8	4	---- ---	---- ---	6022 802
	Grille Brace to Dust Shield, SY1	8	4	---- ---	---- ---	6022 506
	To Center Panel, SY1	8	2	---- ---	---- ---	6022 506
7-16-14	RETAINER, Right, SC1	8	1	---- ---	---- ---	2099 842
	Left, SC1	8	1	---- ---	---- ---	2099 843
	Center, SC1	8	5	---- ---	---- ---	2099 844
7-16-19	SPACER, Grille Moulding, SD3	8	6	---- ---	2417 194	
7-16-22	BRACE, SY1	8	2	---- ---	---- ---	1904 131
7-16-36	GRILLE FRAME and MOULDINGS					
	NOTE: See Exterior Moulding Illustrations in Front of Group 23 Body.					
7-16-37	CLIP, Grille Panel Moulding, SD1, SD2		8	---- ---	6001 227	
	Grille Moulding, SD3	8	6	---- ---	6001 104	
7-16-38	NUT, Grille Lower Panel Moulding, SY1	8	11	---- ---	---- ---	6022 162
7-16-44	GRILLE MOULDING CAP or COVER					
	NOTE: See Exterior Moulding Illustrations in Front of Group 23 Body.					
7-16-47	BAR, Horizontal, Right, SC2, SC3	8	1	---- ---	---- ---	2099 808
	Left, SC2, SC3	8	1	---- ---	---- ---	2099 809
	Vertical, Center, SC2, SC3	8	1	---- ---	---- ---	2099 824
	Vertical, Center, w/MEDALLION, SC2	8	1	---- ---	---- ---	2099 660
	Vertical, Center, w/MEDALLION, SC3	8	1	---- ---	---- ---	2099 726
7-16-54	WASHER, Frame to Horizontal Bar, SC2, SC3	8	2	---- ---	---- ---	6006 480
	Grille to Headlamp Plate, SD3	8	4	---- ---	617 115	
7-16-61	RADIATOR GRILLE NAME PLATE					
	NOTE: See Exterior Moulding Illustrations in Front of Group 23 Body.					

MyMopar.com

CODE	PART NAME AND DESCRIPTION	CYL.	PER CAR	VALIANT LANCER	PLYMOUTH DODGE	CHRYSLER IMPERIAL
7-16-0	**RADIATOR GRILLE - Cont'd**					
7-16-63	PANEL, w/End PLATE, SD1, SD2		1	---- ---	2099 741	
	Center, SC1, SC2, SC3	8	1	---- ---	---- ---	1904 385
	Center, SY1	8	1	---- ---	---- ---	2099 859
	Lower, SY1	8	1	---- ---	---- ---	2099 800
7-16-73	NUT, to Stone Deflector, SL1	6	4	6022 894		
7-17-0	**RADIATOR GRILLE MEDALLION OR ORNAMENT**					
	NOTE: See Exterior Moulding Illustrations in Front of Group 23 Body.					
7-17-2	BASE, Medallion, SC1	8	1	---- ---	---- ---	2099 708
7-17-15	SCREW, Mounting Plate to Grille, SD3	8	3	---- ---	6023 641	
7-17-19	PLATE, Radiator Grille Ornament Mounting, SD3	8	1	---- ---	2417 188	
7-17-21	SPACER, Mounting Plate to Grille, Upper, SD3	8	1	---- ---	2417 194	
	Lower, SD3	8	1	---- ---	2417 195	
7-26-0	**RADIATOR YOKE**					
7-26-2	YOKE, SD3, SC1, SC2	8	1	---- ---	1904 291	1904 291
	SC3, SY1	8	1	---- ---	---- ---	1904 392
7-26-5	SCREW, to Side Shield, SP1, SP2, SD1, SD2		★	---- ---	6022 530	
	SC1, SC2, SC3	8	★	---- ---	---- ---	6022 362
	SD3, SY1	8	★	---- ---	6022 562	6022 562
	To Vacuum Tank, SC1, SC2, SC3	8	2	---- ---	---- ---	1902 716
	STUD, to Frame, SD3	8	2	---- ---	1863 760	1863 760
	To Shear Panel, SY1	8	4	---- ---	---- ---	6022 854
7-26-8	WASHER, to Frame, SD3	8	2	---- ---	6022 193	6022 193
7-26-15	SHIELD, Air, Right, SV1	6	1	2242 332		
	Left, SV1	6	1	2242 333		
	Center, SV1	6	1	2242 334		
	SHIELD, w/EXTENSION, SL1	6	1	2195 949		
	SHIELD, SC3, SY1	8	1	---- ---	---- ---	1903 457
7-26-17	CLIP, Air Shield, SC3, SY1	8	4	---- ---	---- ---	6010 060
7-26-18	SHIM, to Frame, SD3	8	★	---- ---	1902 763	1902 763
7-26-29	NUT, Air Shield to Crossmember, SL1	6	3	⊟6023 159		
7-26-30	PANEL, Upper, SL1	6	1	2099 779		
	Upper, SV1	6	1	2242 335		
	Side, Right		1	2082 064	2099 334	
	Side, Left		1	2082 065	2099 335	
7-26-32	CROSSMEMBER, Side Panel		1	2259 265	2099 339	
	NOTE: For Lower Crossmember See Part Type Code 23-32-17					
7-26-33	SCREW, Crossmember to Support, SV1	6	1	6022 802		
	Upper Panel to Crossmember Support, SL1	6	1	6022 802		
	To Fender Reinforcement	6	2	6022 530		
	Air Shield to Deflector, SV1	6	4	6022 530		
7-26-34	SCREW, Air Shield to Crossmember Support, SL1	6	1	6022 779		
	Air Shield to Crossmember, SL1	6	3	2082 867		
	SV1	6	7	6022 530		
	Air Shield Center to Outer Panel, SV1	6	2	6022 506		
7-26-36	EXTENSION, Upper Support, SV1	6	1	2242 208		
7-26-37	BRACKET, Upper Crossmember to Side Shield, Right		1	1904 932	2099 598	
	Left		1	1904 933	2099 599	
	SUPPORT, Upper Panel to Crossmember, SL1	6	1	2195 098		

★ Indicates use as required. Numerals in parentheses ( ) refer to notes. Printed in U.S.A.
⊟ Indicates parts not listed in any previous parts book. Prices and specifications subject to change without notice.
* Indicates change or addition.

MyMopar.com

CODE	PART NAME AND DESCRIPTION	CYL.	PER CAR	VALIANT LANCER	PLYMOUTH DODGE	CHRYSLER IMPERIAL
7-31-0	**RADIATOR DUST SHIELD**					
7-31-2	SEAL, Dust Shield to Bumper, SC1, SC2, SC3	8	1	---- ---	---- ---	1904 938
7-31-10	SHIELD, Dust, SP1, SP2		1	---- ---	2099 352	
	SD1, SD2		1	---- ---	*2099 496	
	SD3	8	1	---- ---	*1904 092	
	SC1, SC2	8	1	---- ---	---- ---	1904 463
	SC3	8	1	---- ---	---- ---	1904 397
	SY1	8	1	---- ---	---- ---	2099 639
7-31-14	NUT, SD1, SD2		★	---- ---	6010 006	
7-31-15	SCREW, Dust Shield to Headlamp Brace, SP1, SP2		★	---- ---	6022 506	
	Dust Shield to Frame, SD1, SD2		★	---- ---	6022 506	
	Dust Shield to Fender, SD1, SD2		★	---- ---	6022 506	
	Dust Shield to Headlamp Plate, SD3	8	★	---- ---	*6022 802	
	Dust Shield to Grille, SD3	8	★	---- ---	*6022 506	
	Dust Shield to Lock Support, SC1, SC2	8	★	---- ---	---- ---	6022 802
	Dust Shield to Lock Support, SD3, SC3	8	★	---- ---	*6022 506	*6022 506
	Dust Shield to Headlamp Base, SC1, SC2, SC3	8	★	---- ---	---- ---	6022 802
	Dust Shield to Fender SD3, SC1, SC2, SC3	8	★	---- ---	*6022 802	*6022 802
	Dust Shield to Radiator Yoke, SD3	8	★	---- ---	*6022 506	*6022 506
7-31-23	BRACKET, Dust Shield, SP1, SP2		1	---- ---	2099 343	
7-31-26	CLIP, Dust Shield to Seal, SC1, SC2, SC3	8	11	---- ---	---- ---	6000 070
7-31-28	BRACE, Dust Shield to Headlamp Plate, SP1, SP2		2	---- ---	2099 957	
7-31-42	EXTENSION, Dust Shield, Right, SP1, SP2		1	---- ---	2099 354	
	Left, SP1, SP2		1	---- ---	2099 355	
7-31-45	SHIM, Radiator Yoke to Fender Side Shield	8	★	---- ---	---- ---	1903 036
7-33-0	**RADIATOR CROSS BAR**					
7-33-1	BAR, Cross, SP1, SP2		1	---- ---	2099 341	
	SD1, SD2		1	---- ---	2099 582	
	SD3	8	1	---- ---	*1904 085	
	SC1, SC2, SC3	8	1	---- ---	---- ---	1904 389
	SY1	8	1	---- ---	---- ---	1904 146
7-33-4	SUPPORT, to Frame		1	---- ---	2099 781	
7-33-12	SCREW, Cross Bar, SP1, SP2, SD1, SD2		★	---- ---	*6022 506	*6022 506
	SD3	8	★	---- ---	*6022 802	*6022 802
	Cross Bar Brace to Headlamp Plate, SP1, SP2		2	---- ---	*6022 325	
7-35-0	**RADIATOR STONE DEFLECTOR**					
7-35-2	DEFLECTOR, Center, SV1	6	1	2099 775		
	Outer, Right, SV1	6	1	2099 758		
	Outer, Left, SV1	6	1	2099 759		
	DEFLECTOR, SL1	6	1	2195 611		
	SP1, SP2		1	---- ---	2099 367	
	SD1, SD2		1	---- ---	2099 503	
7-35-3	SUPPORT, to Cross Bar, SP1, SP2		1	---- ---	2099 347	
7-35-12	SCREW, to Crossmember Support	6	1	6022 779		
	To Radiator Grille, SL1	6	4	6022 951		
	To Air Shield	6	4	6022 530		
	Center Panel to Outer Panel, SV1	6	4	6022 951		
	To Radiator Grille, SP1, SP2		2	---- ---	6022 506	
	To Headlamp Housing Support, SP1, SP2		2	---- ---	6022 506	
	To Cross Bar Support, SP1, SP2		2	---- ---	6022 506	
	To Lock Support, SD1, SD2		1	---- ---	6022 506	

MyMopar.com

CODE	PART NAME AND DESCRIPTION	CYL.	PER CAR	VALIANT LANCER	PLYMOUTH DODGE	CHRYSLER IMPERIAL
7-35-0	**RADIATOR STONE DEFLECTOR - Cont'd**					
7-35-13	NUT, to Air Shield, SV1	6	4	*6023 171		
7-35-20	RADIATOR STONE DEFLECTOR MOULDING					
	NOTE: See Exterior Moulding Illustrations in Front of Group 23 Body.					
7-41-0	**THERMOSTAT**					
7-41-4	THERMOSTAT, 160° Fahrenheit	6	1	2129 206	2129 206	
	180° Fahrenheit	6	1	2129 205	2129 205	
	160° Fahrenheit	8	1	---- ---	1734 957	
	180° Fahrenheit	8	1	---- ---	1735 011	1735 011
7-42-0	**WATER PUMP**					
7-42-1	WATER PUMP PACKAGE	6	1	2196 910	2196 910	
	SP2, SD2	8	1	---- ---	1752 422	
	SP2, SD2, SD3, w/361 cu. in. Engine, w/o Air Cond.	8	1	---- ---	1879 526	1879 526
	SP2, SD2, SD3, w/361 cu. in. Engine, w/Air Cond.	8	1	---- ---	1879 536	1879 536
	SC2 w/413 cu. in. Engine	8	1	---- ---	---- ---	1879 536
7-42-4	REPAIR PACKAGE, Water Pump	6	1	2298 907	2298 907	
		8	1	---- ---	1752 435	
	SP2, SD2, SD3, w/361 cu. in. Engine, w/o Air Cond.	8	1	---- ---	1843 447	1843 447
	w/Air Conditioning	8	1	---- ---	1752 622	1752 622
7-43-0	**WATER PUMP HOUSING**					
7-43-1	HOUSING, SP2, SD2, SD3, w/361 cu. in. Engine, w/o Air Conditioning	8	1	---- ---	1944 916	1944 916
	w/Air Conditioning	8	1	---- ---	2240 318	2240 318
7-43-8	CAP, Heater Hole	6	1	2128 425	2128 425	
7-44-0	**WATER PUMP GASKET**					
7-44-3	GASKET, Body	6	1	1947 521	1947 521	
		8	1	---- ---	2129 013	
	SP2, SD2, SD3, w/361 cu. in. Engine	8	1	---- ---	1737 705	1737 705
7-44-4	GASKET, Intermediate Plate.	6	1	1947 523	1947 523	
	To Cylinder Block, SP2, SD2, SD3, w/361 cu. in. Engine	8	2	---- ---	1737 761	1737 761
7-45-0	**WATER PUMP SHAFT AND IMPELLER**					
7-45-31	IMPELLER, SP2, SD2, w/318 cu. in. Engine	8	1	---- ---	*1635 783	
	SP2, SD2, SD3, w/361 cu. in. Engine, w/o Air Cond.	8	1	---- ---	1637 724	1637 724
	w/Air Conditioning	8	1	---- ---	1859 151	1859 151
	SC2 w/413 cu. in. Engine	8	1	---- ---	---- ---	1859 151
7-46-0	**WATER PUMP SEAL**					
7-46-1	SEAL	6	1	2120 955	2120 955	
		8	1	---- ---	1243 631	1243 631
7-48-0	**WATER PUMP ELBOW OR NIPPLE**					
7-48-22	NIPPLE, By-Pass	6	1	1947 643	1947 643	
		8	2	---- ---	1618 668	

MyMopar.com

CODE	PART NAME AND DESCRIPTION	CYL.	PER CAR	VALIANT LANCER	PLYMOUTH DODGE	CHRYSLER IMPERIAL

NOTES

MyMopar.com

GROUP 8 - ELECTRICAL

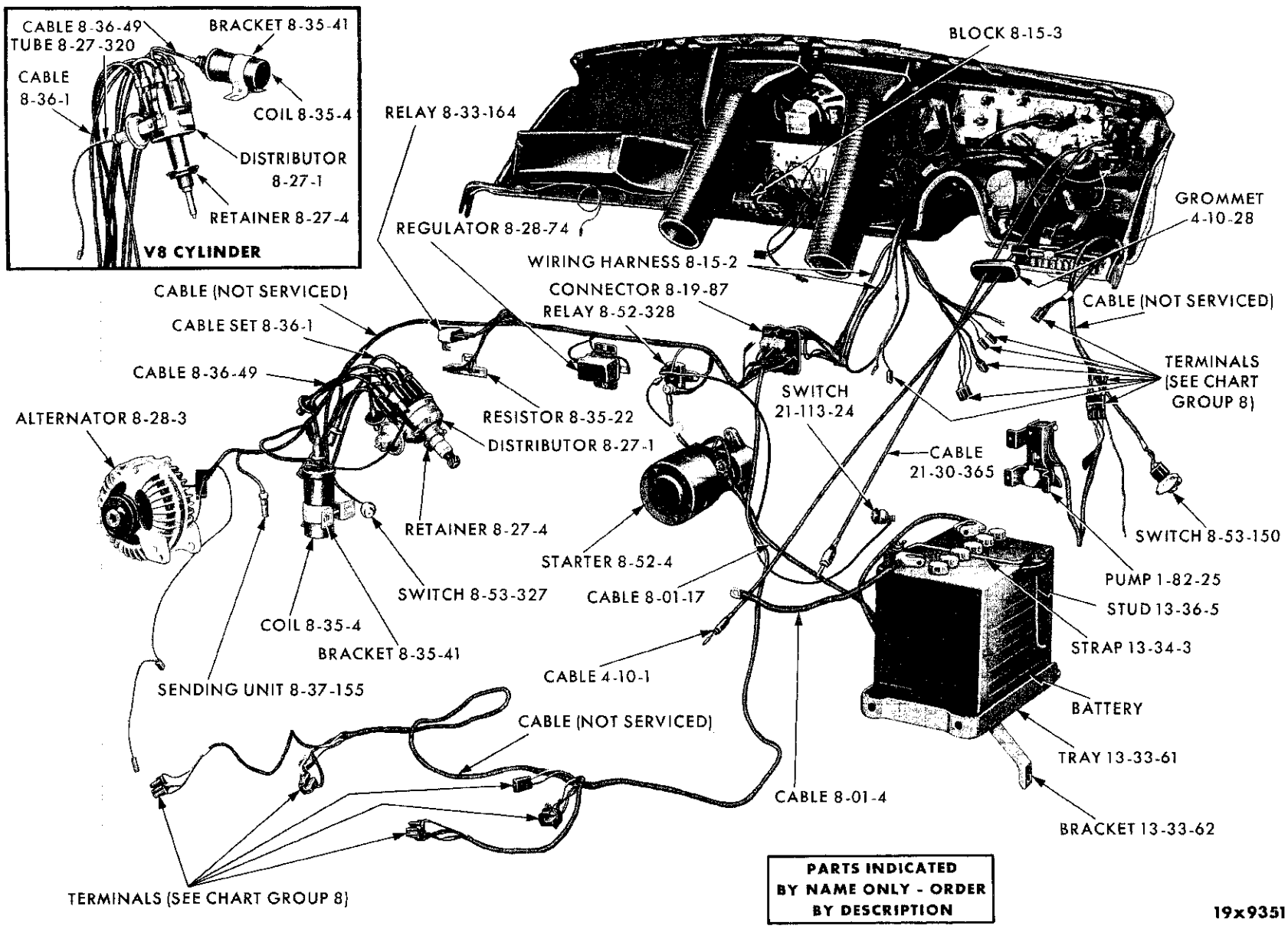

MyMopar.com

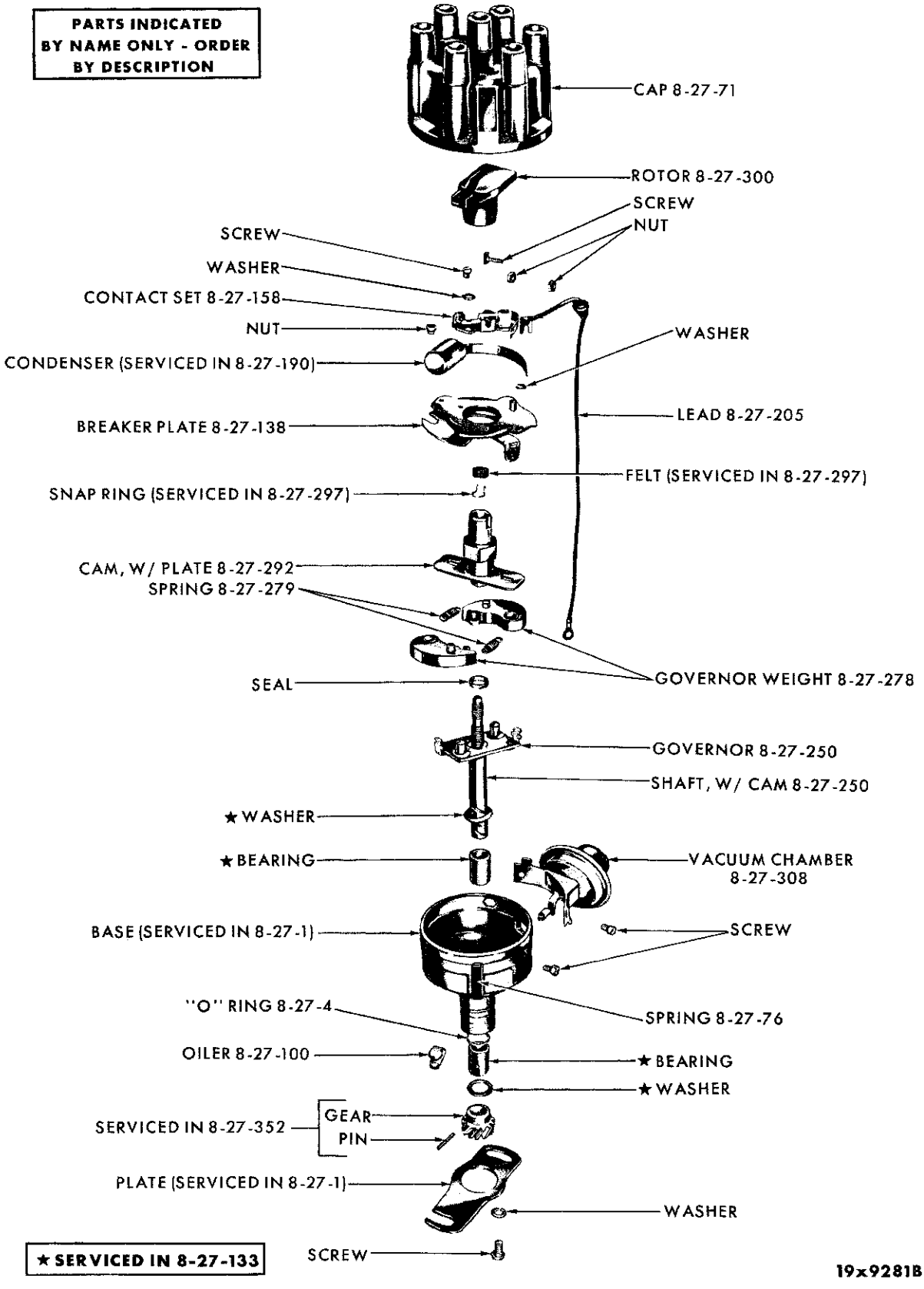

DISTRIBUTOR - 6 CYLINDER

MyMopar.com

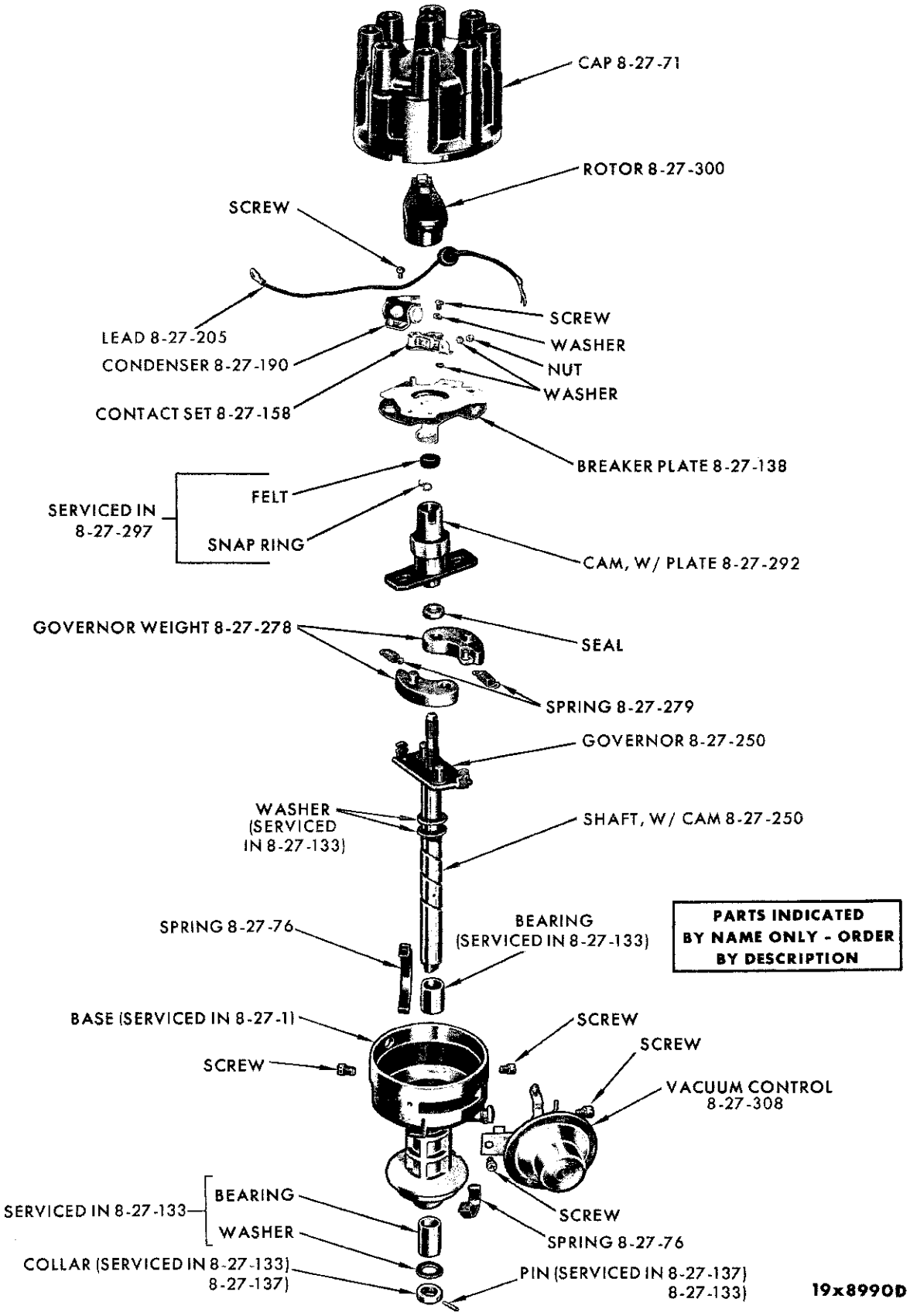

DISTRIBUTOR - V8 CYLINDER

MyMopar.com

CODE	PART NAME AND DESCRIPTION	PER CAR	VALIANT LANCER	PLYMOUTH DODGE	CHRYSLER IMPERIAL

NOTES

MyMopar.com

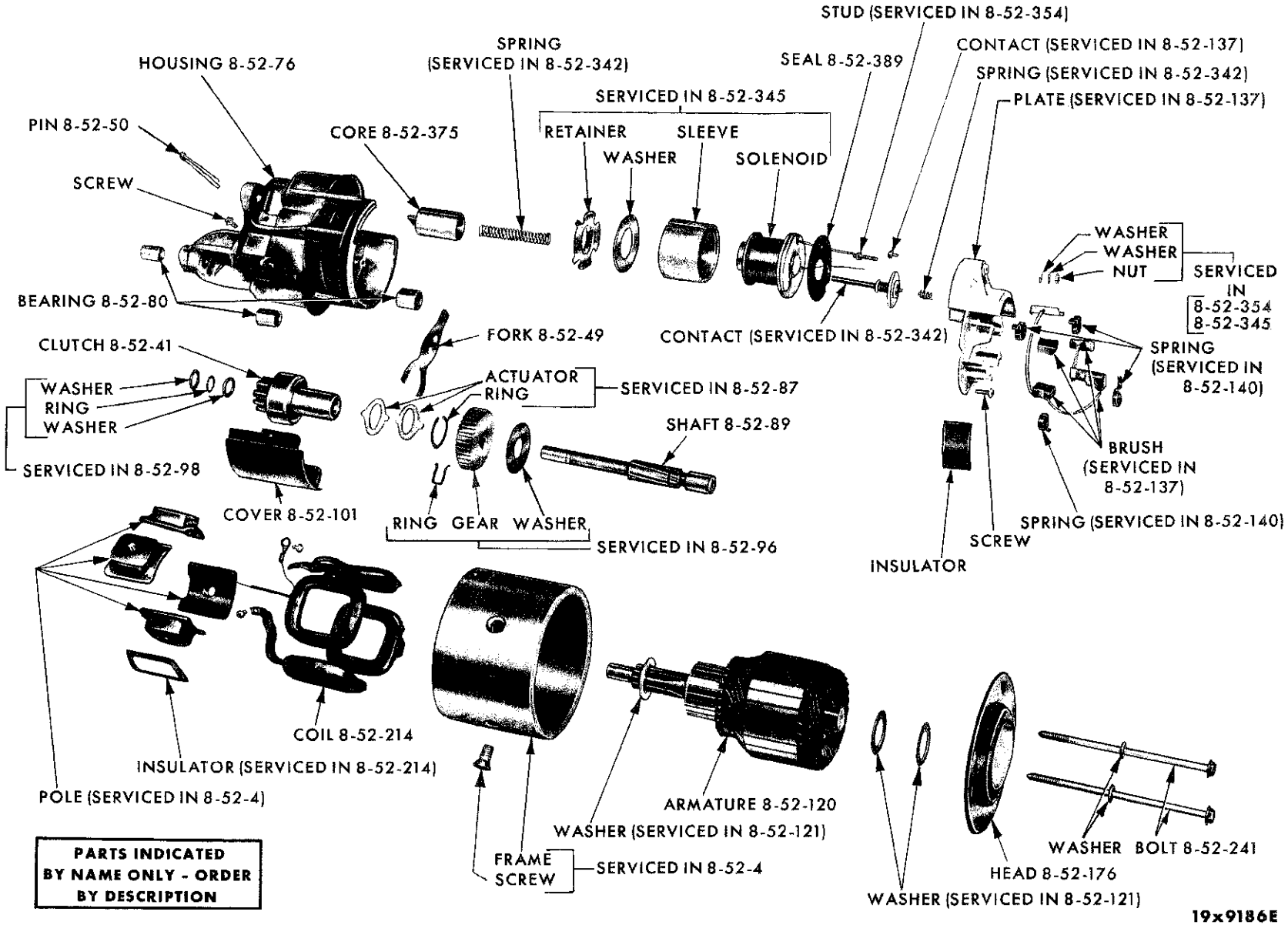

STARTER

MyMopar.com

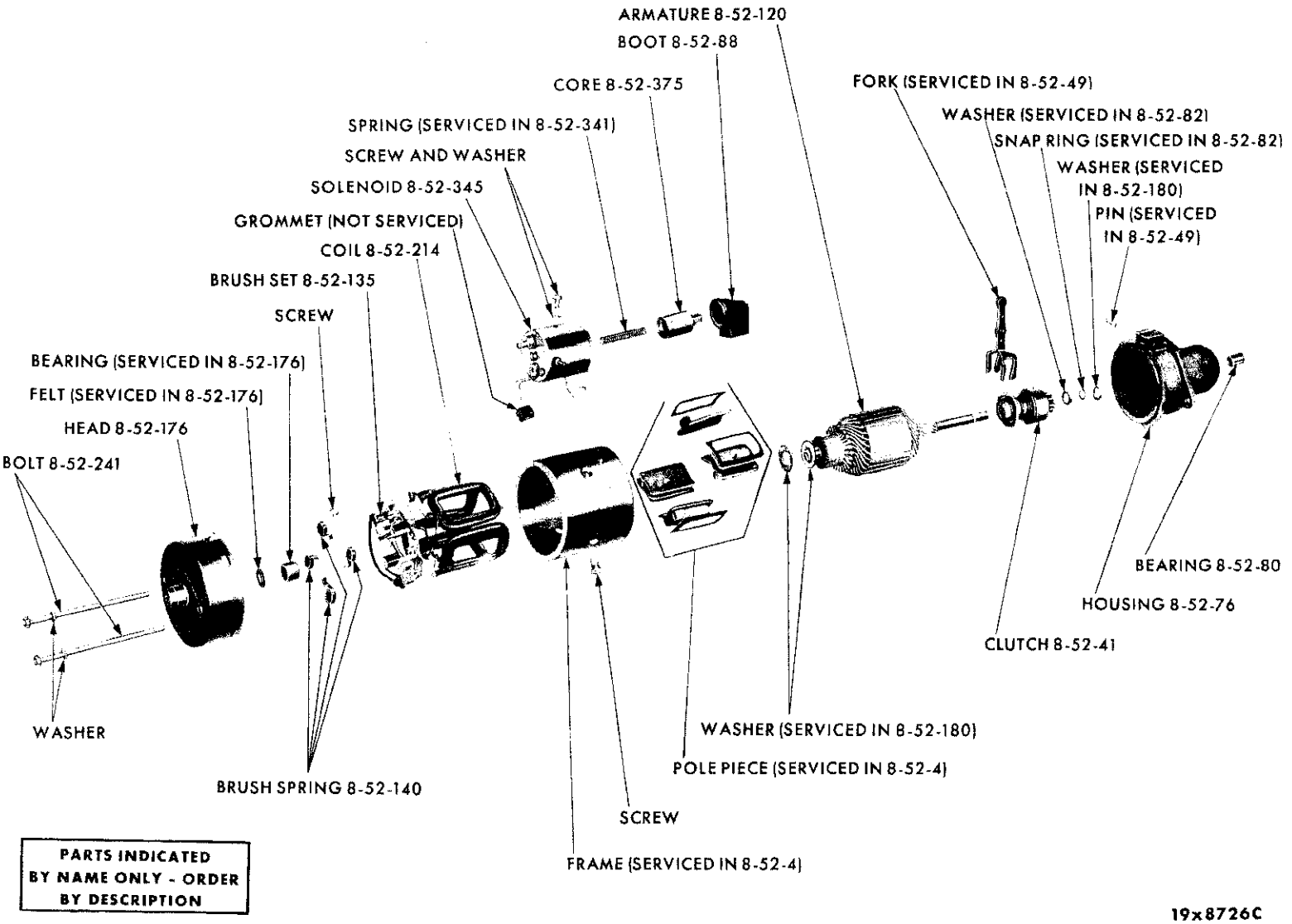

STARTER - CHRYSLER SC1-2 (STANDARD TRANSMISSION)

MyMopar.com

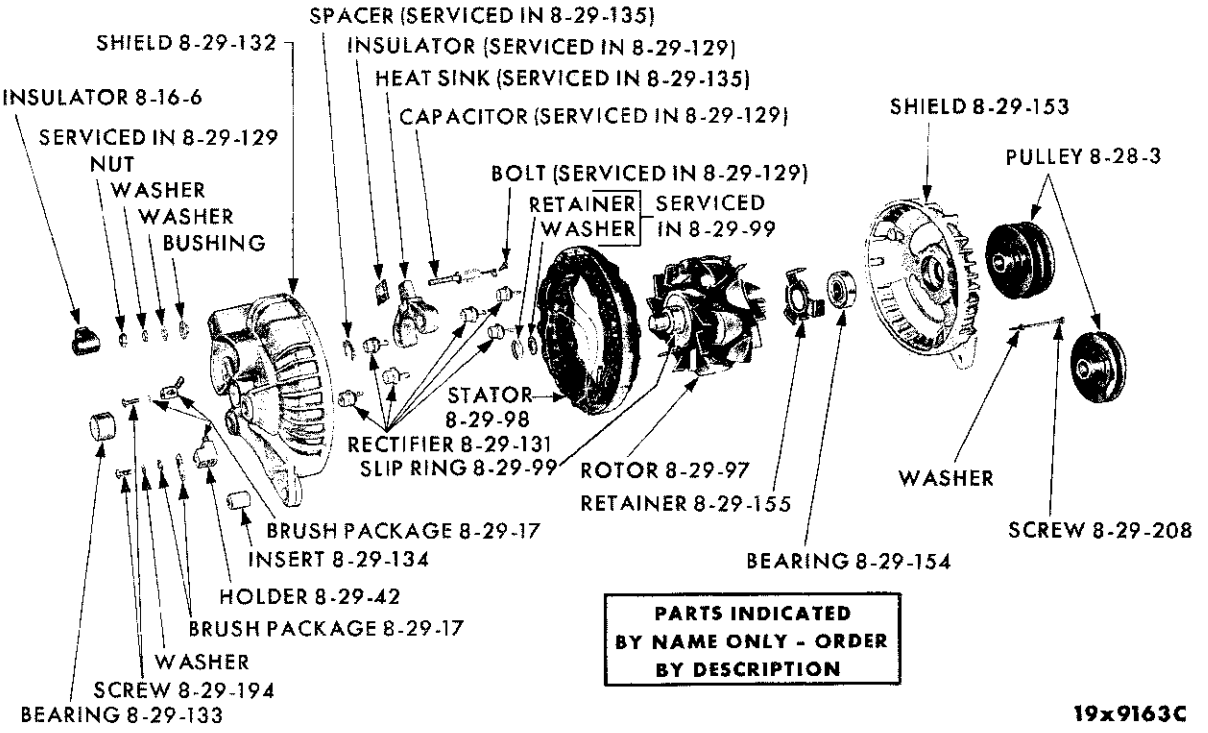

ALTERNATOR

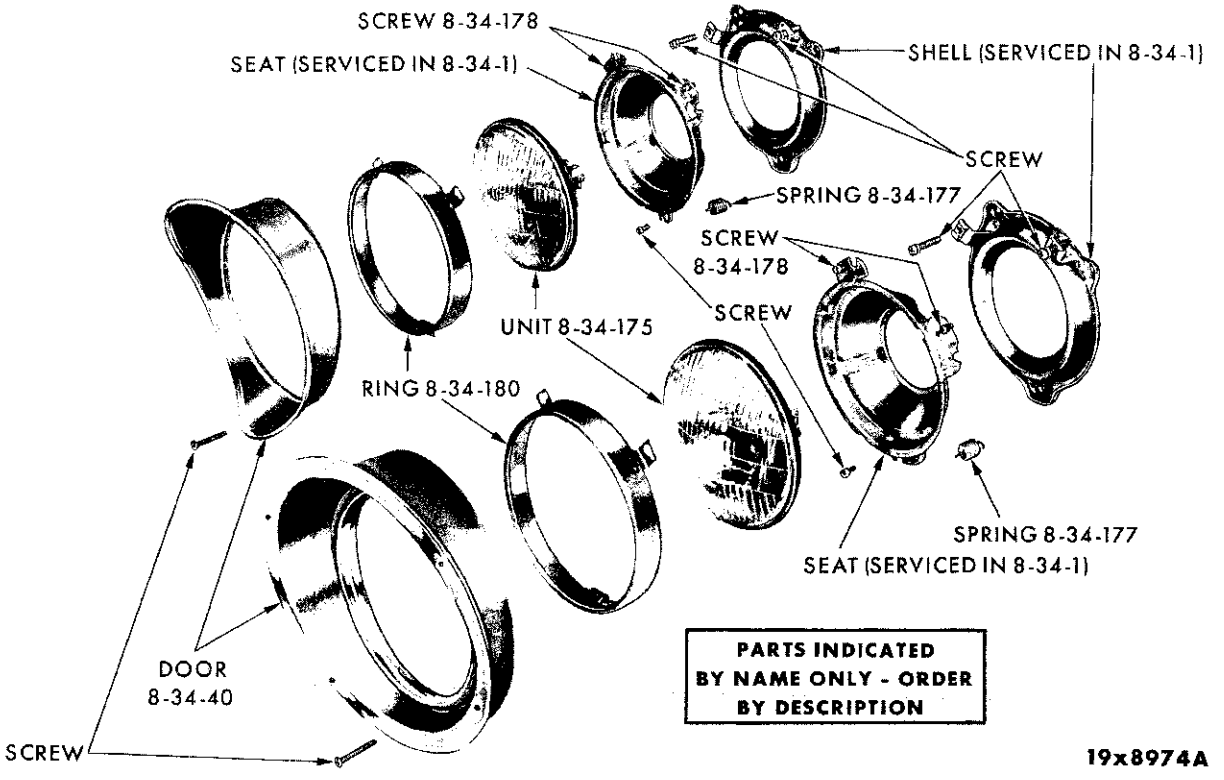

HEADLAMP - PLYMOUTH SP1-2

MyMopar.com

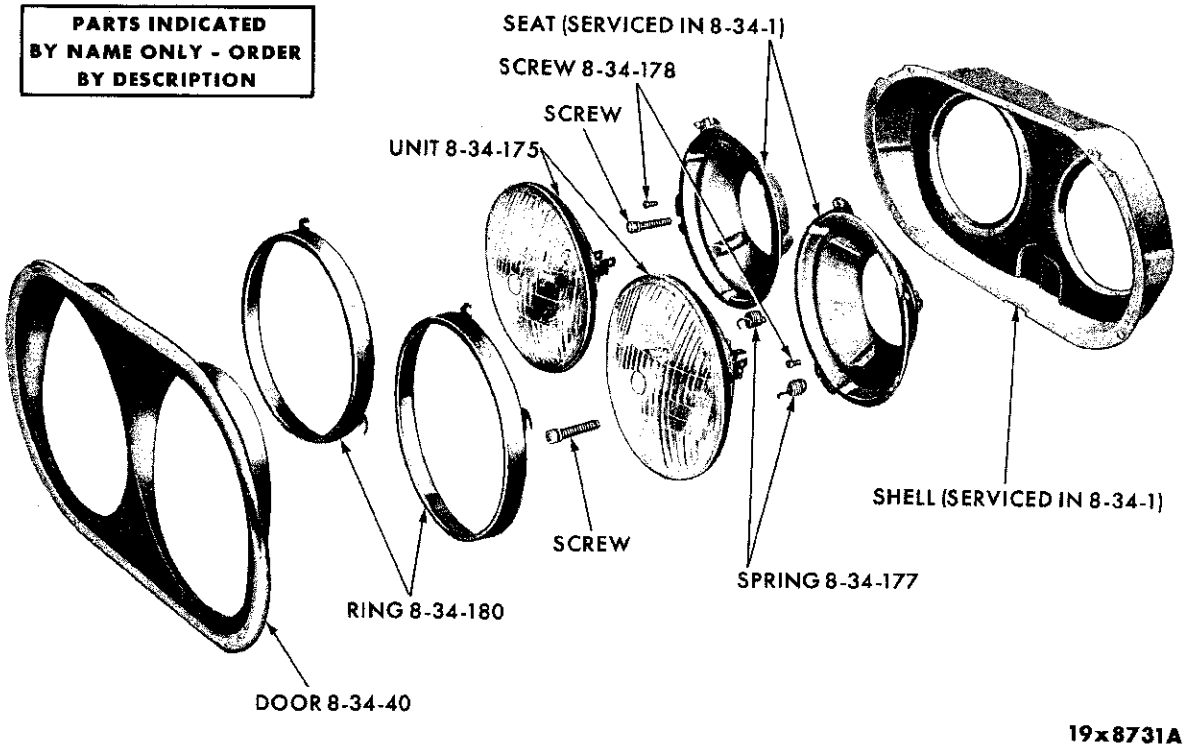

HEADLAMP - VALIANT SV1

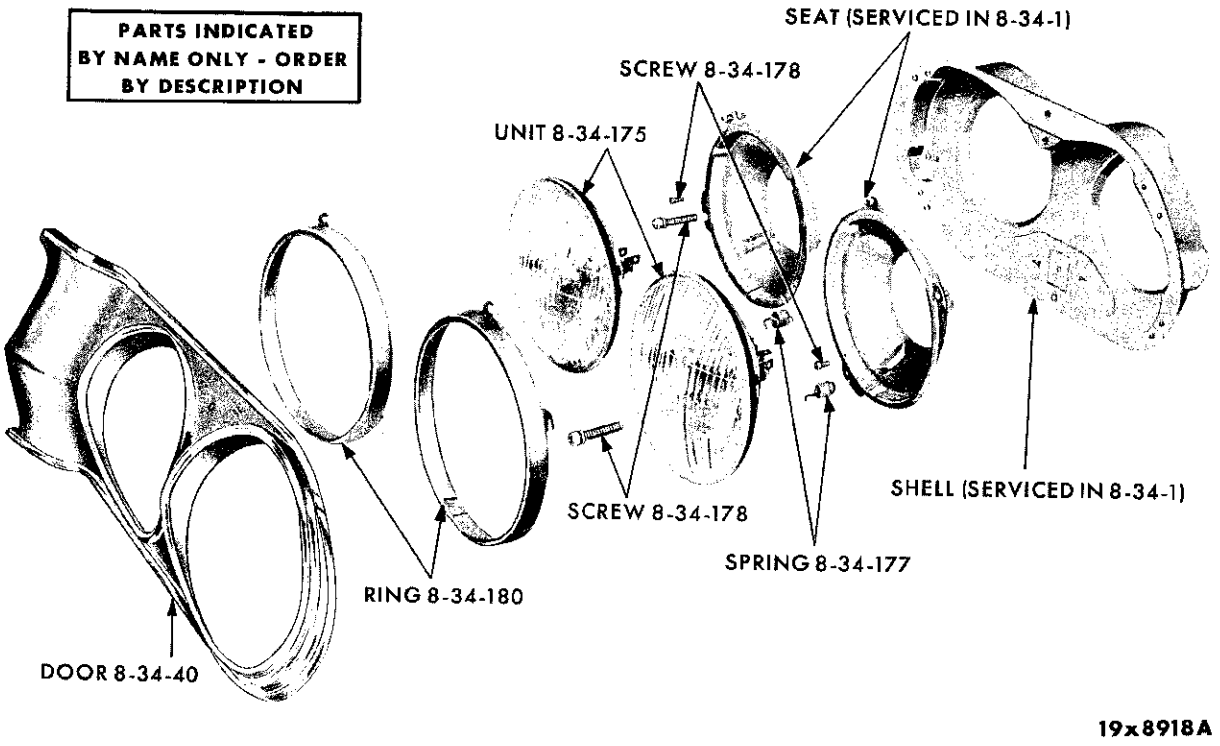

HEADLAMP - LANCER SL1

MyMopar.com

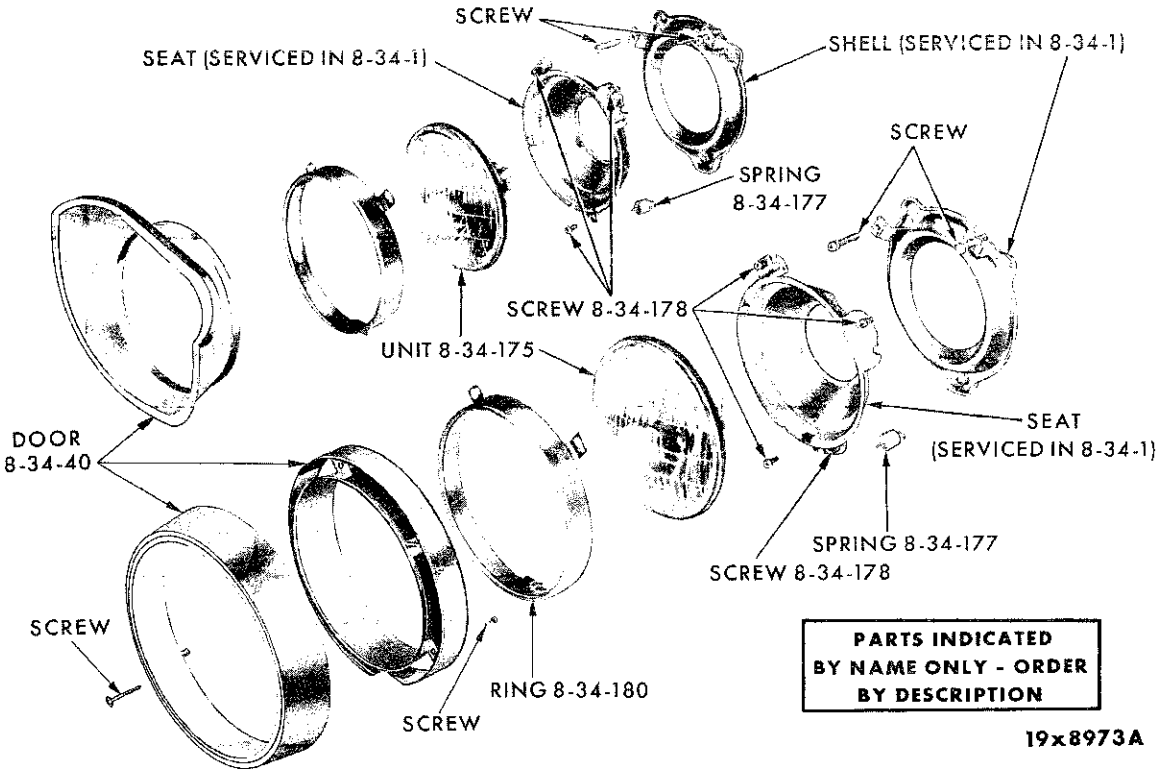

HEADLAMP - DODGE SD1-2

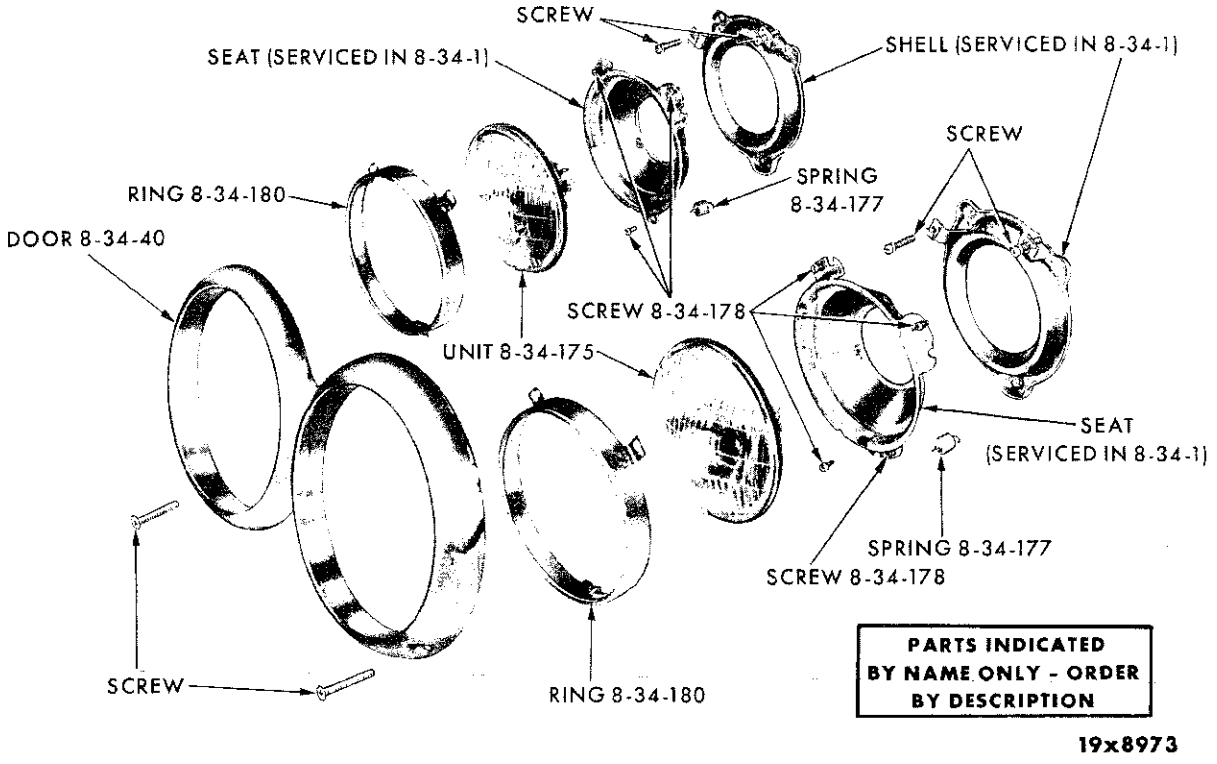

HEADLAMP - DODGE SD3

MyMopar.com

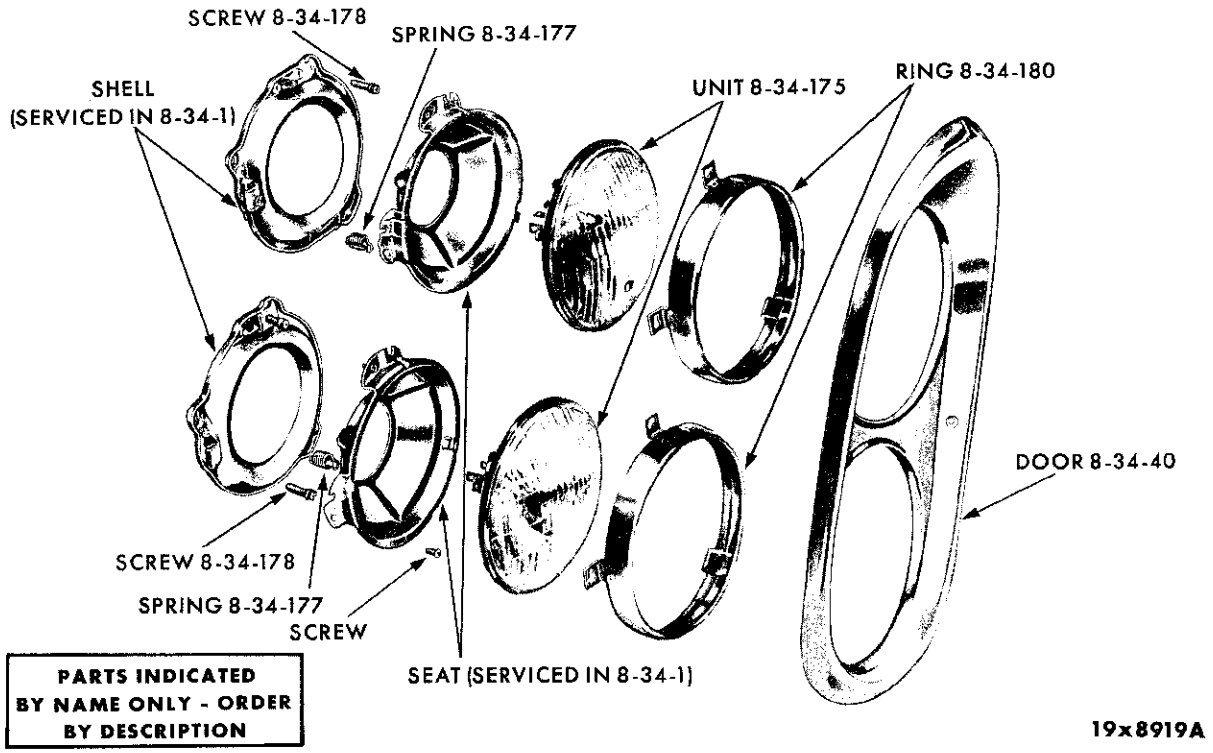

HEADLAMP - CHRYSLER SC1-2-3

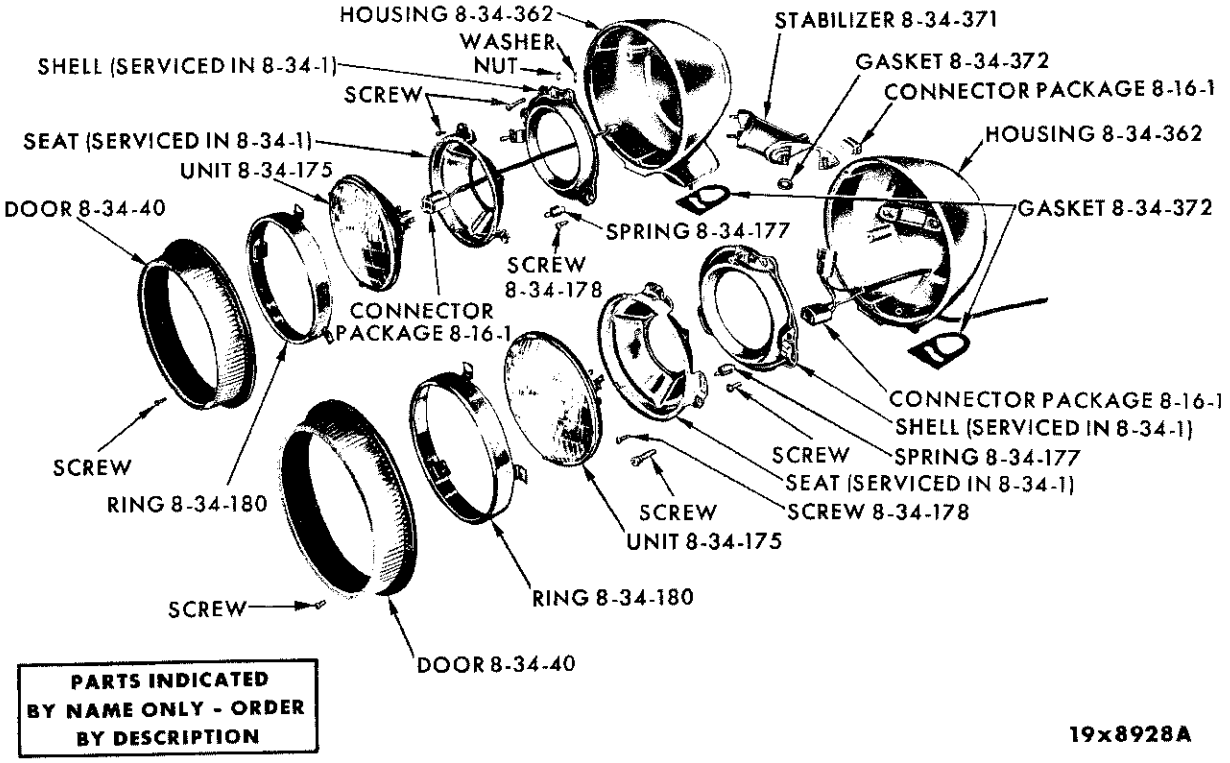

HEADLAMP - IMPERIAL SY1

MyMopar.com

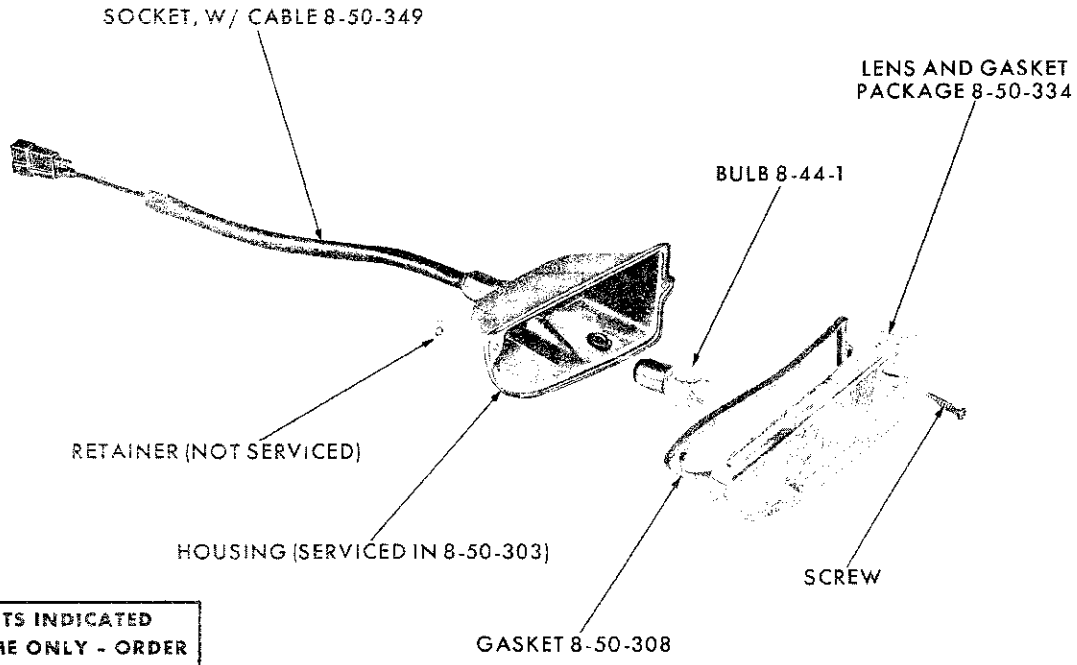

PARTS INDICATED BY NAME ONLY - ORDER BY DESCRIPTION

19x9152

PARKING LAMP - PLYMOUTH SP1-2

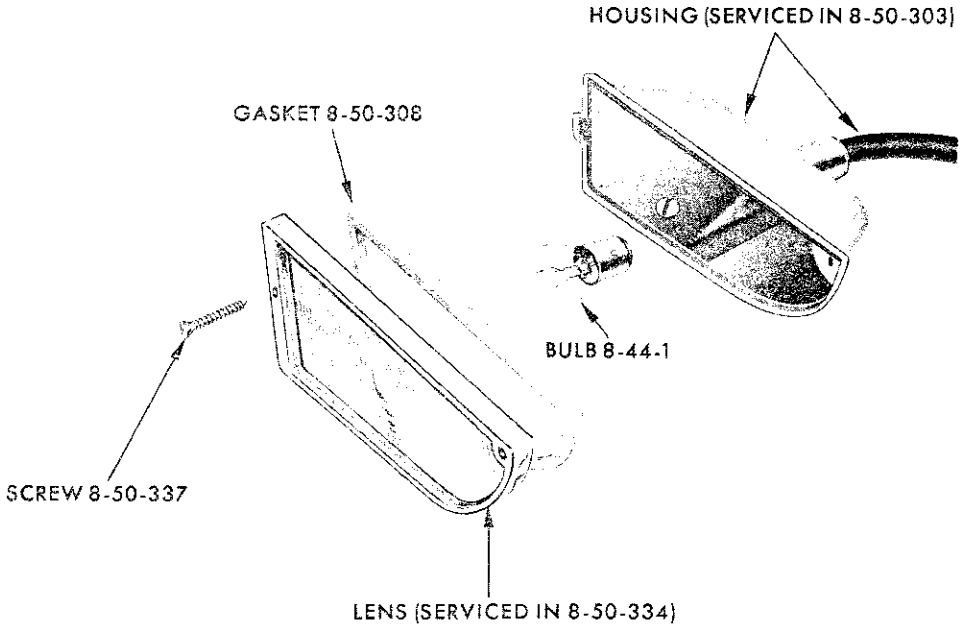

19x8739A

PARKING LAMP - VALIANT SV1

MyMopar.com

PARTS INDICATED BY NAME ONLY - ORDER BY DESCRIPTION

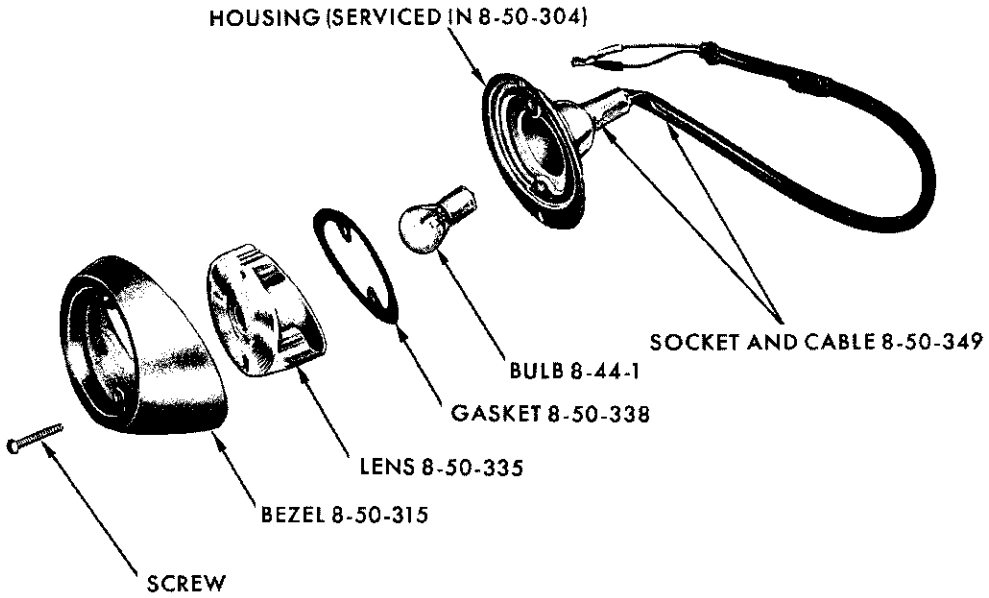

19x8943A

PARKING LAMP - LANCER SL1

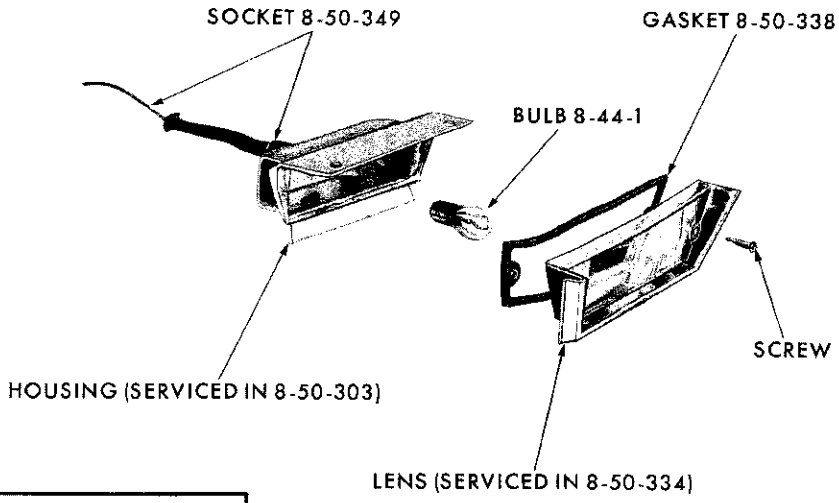

PARTS INDICATED BY NAME ONLY - ORDER BY DESCRIPTION

19x9187

PARKING LAMP - DODGE SD1-2

MyMopar.com

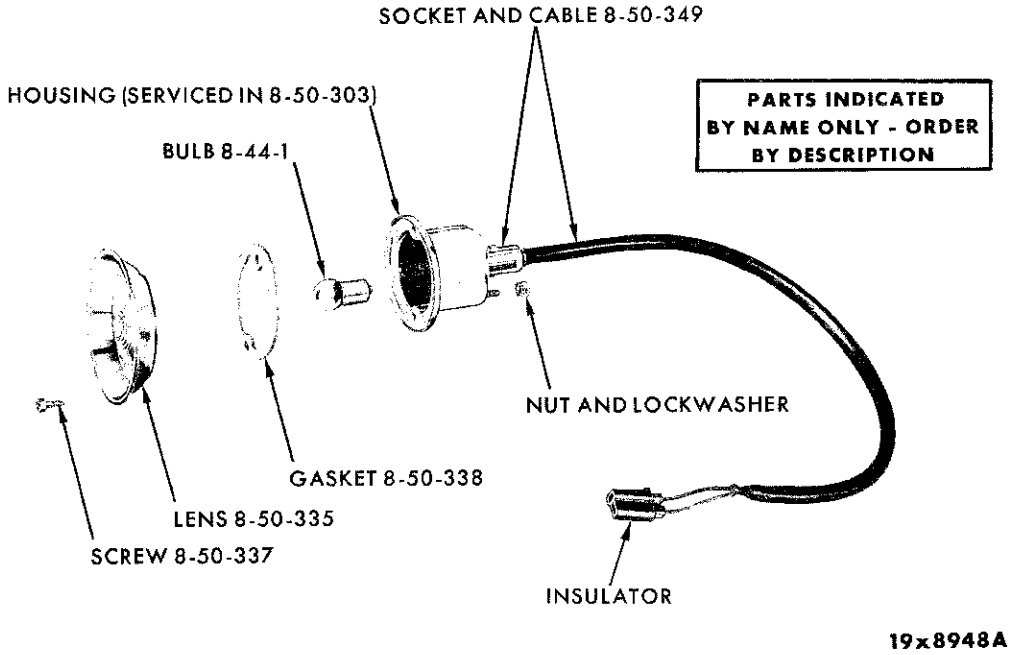

PARKING AND TURN SIGNAL LAMP - DODGE SD3

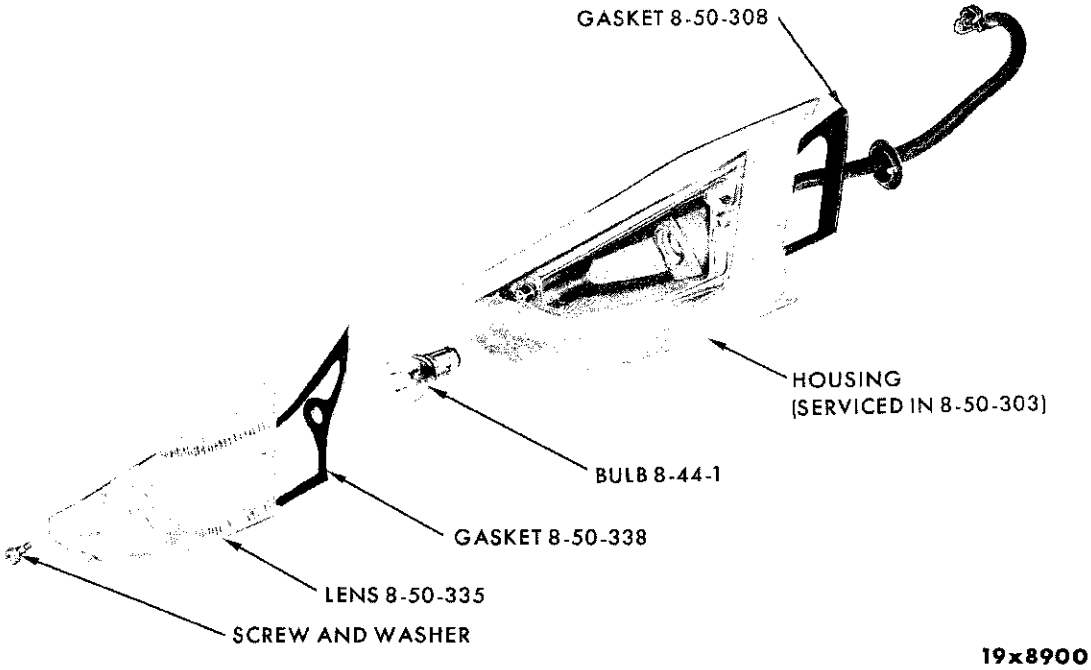

PARKING LAMP - CHRYSLER SC1-2-3

MyMopar.com

CODE	PART NAME AND DESCRIPTION	PER CAR	VALIANT LANCER	PLYMOUTH DODGE	CHRYSLER IMPERIAL

NOTES

MyMopar.com

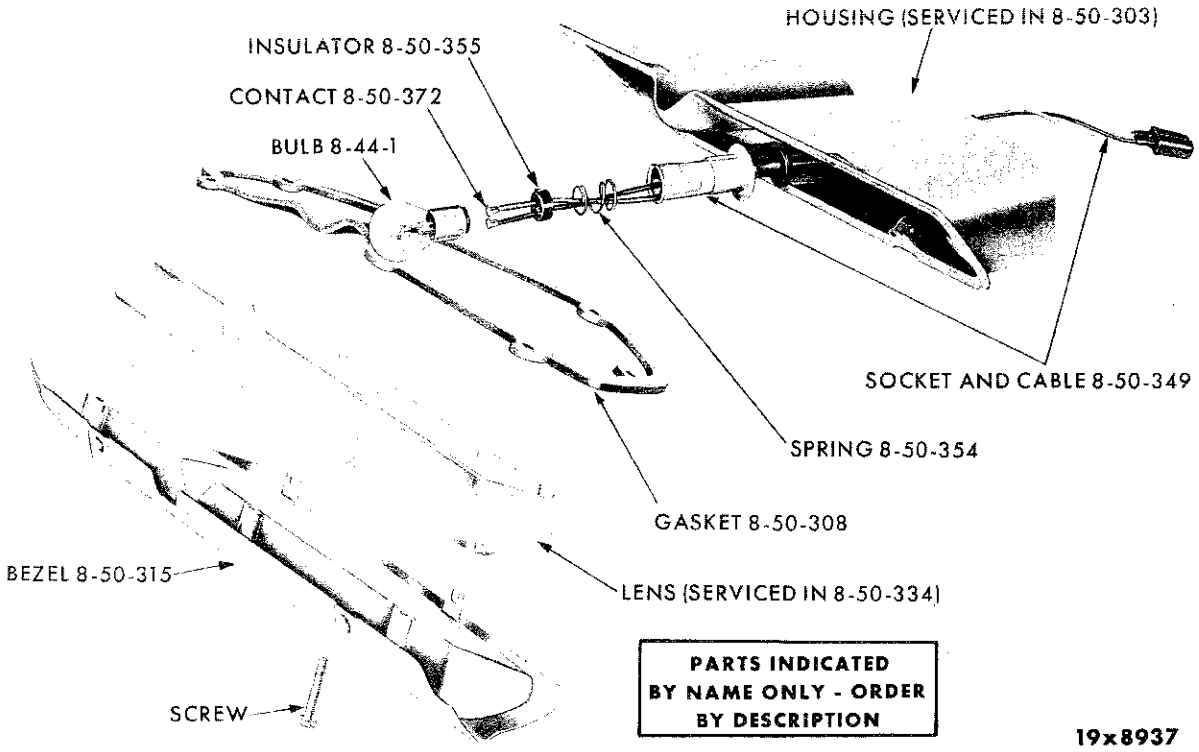

PARKING LAMP - IMPERIAL SY1

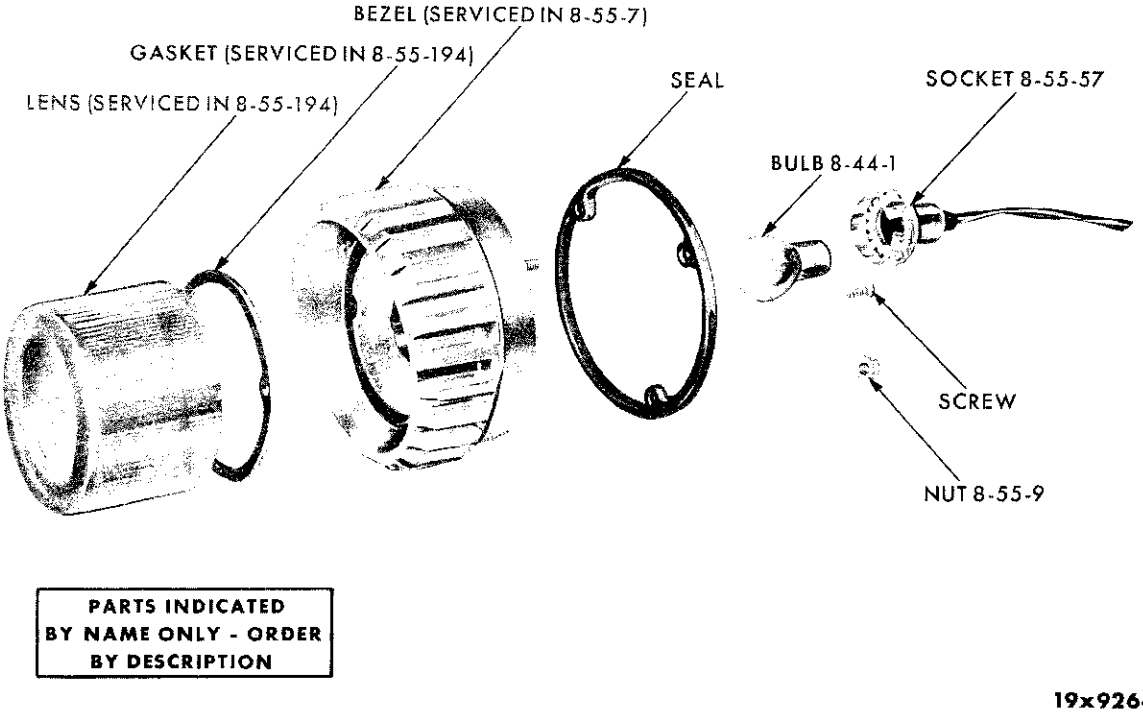

TAIL AND STOP LAMP - PLYMOUTH SP1-2

MyMopar.com

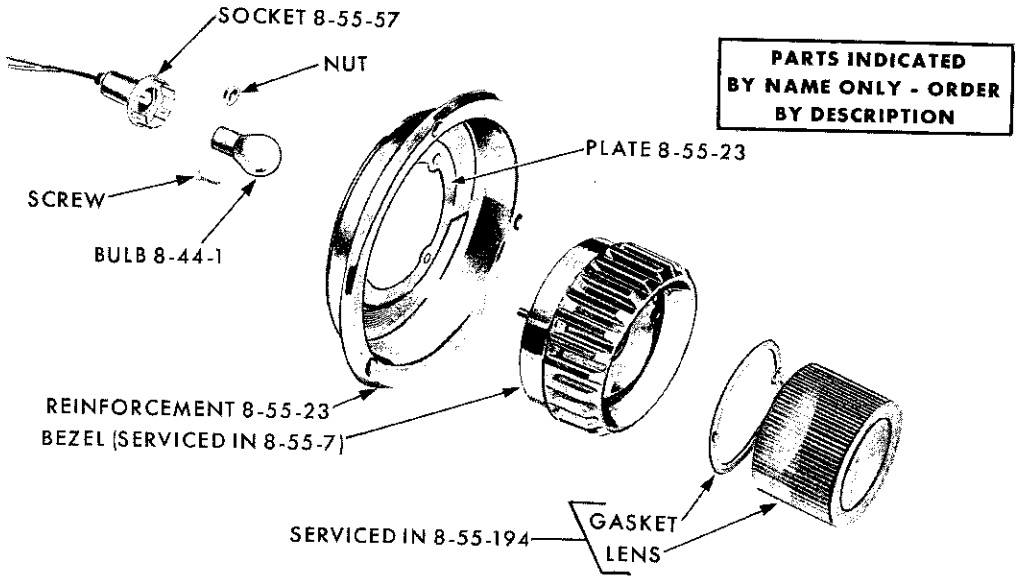

19x9180A

TAIL AND STOP LAMP - PLYMOUTH SP1-2 (SUBURBAN)

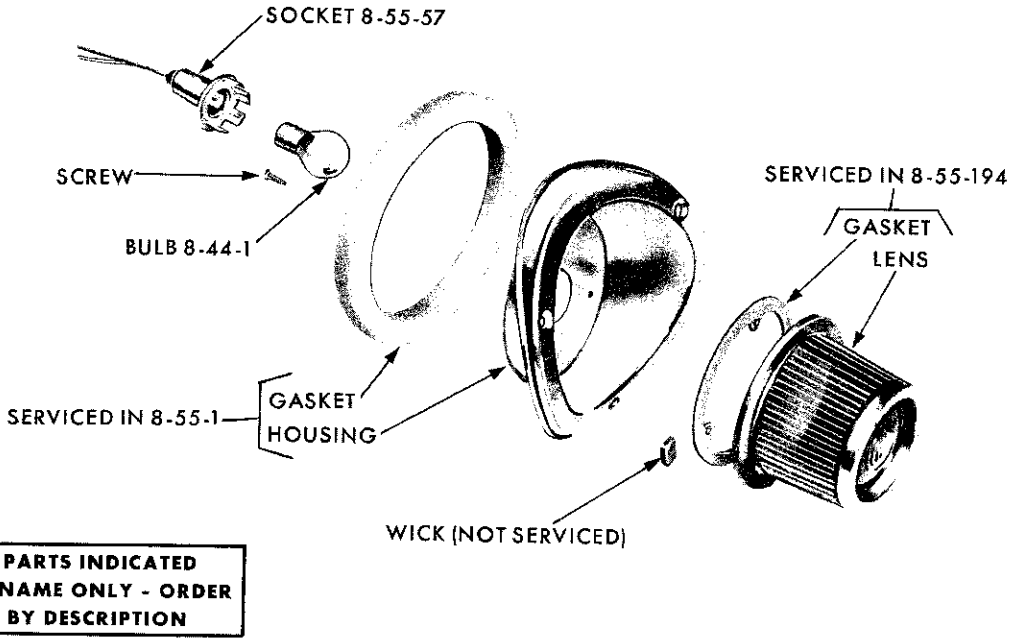

19x9224

TAIL AND STOP LAMP - VALIANT SV1

MyMopar.com

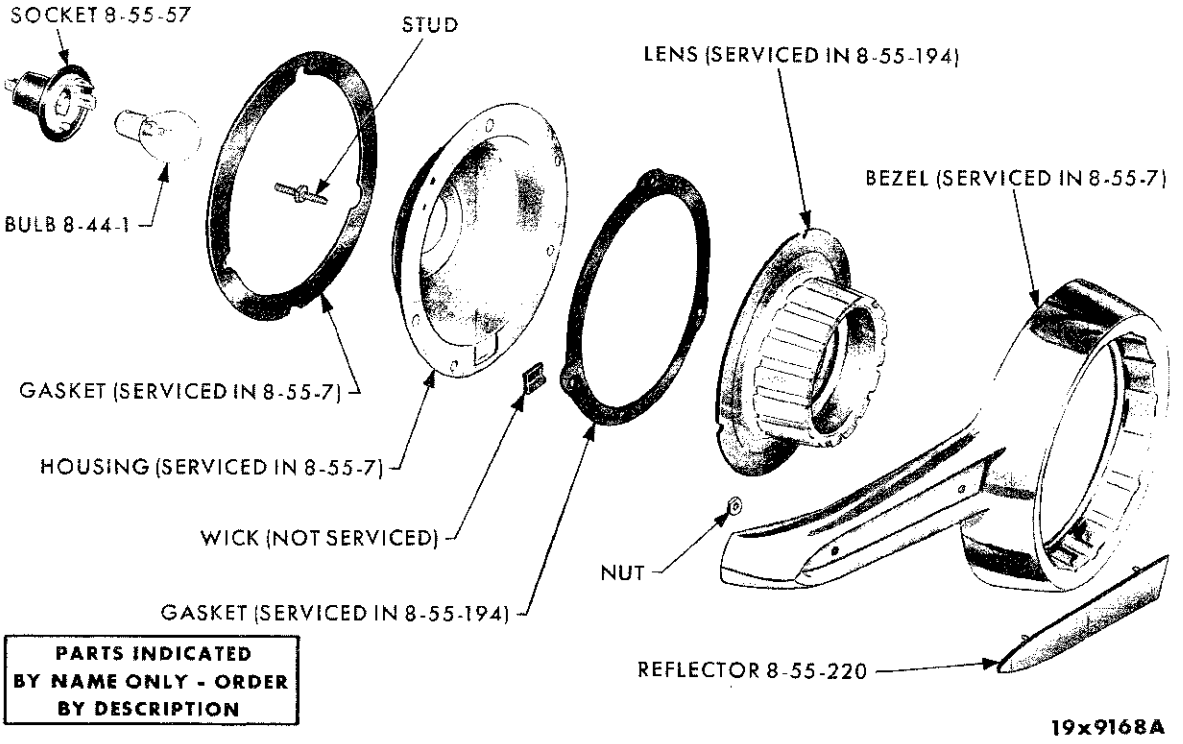

TAIL AND STOP LAMP - LANCER SL1

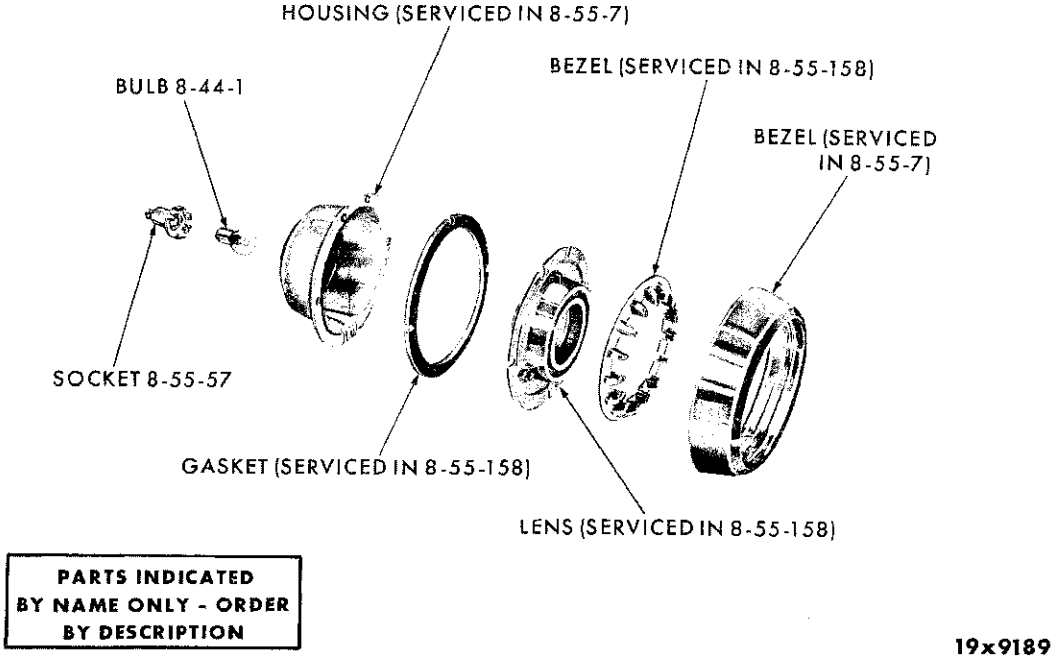

TAIL AND STOP LAMP - DODGE SD1-2 (EXCEPT SUBURBAN)

MyMopar.com

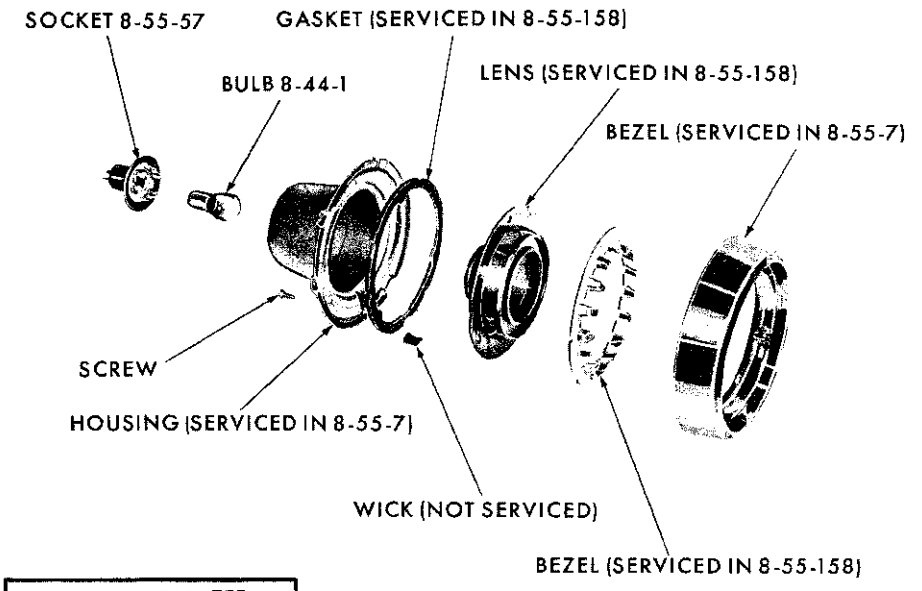

PARTS INDICATED BY NAME ONLY - ORDER BY DESCRIPTION

19x9191

TAIL AND STOP LAMP - DODGE SD1-2 (SUBURBAN)

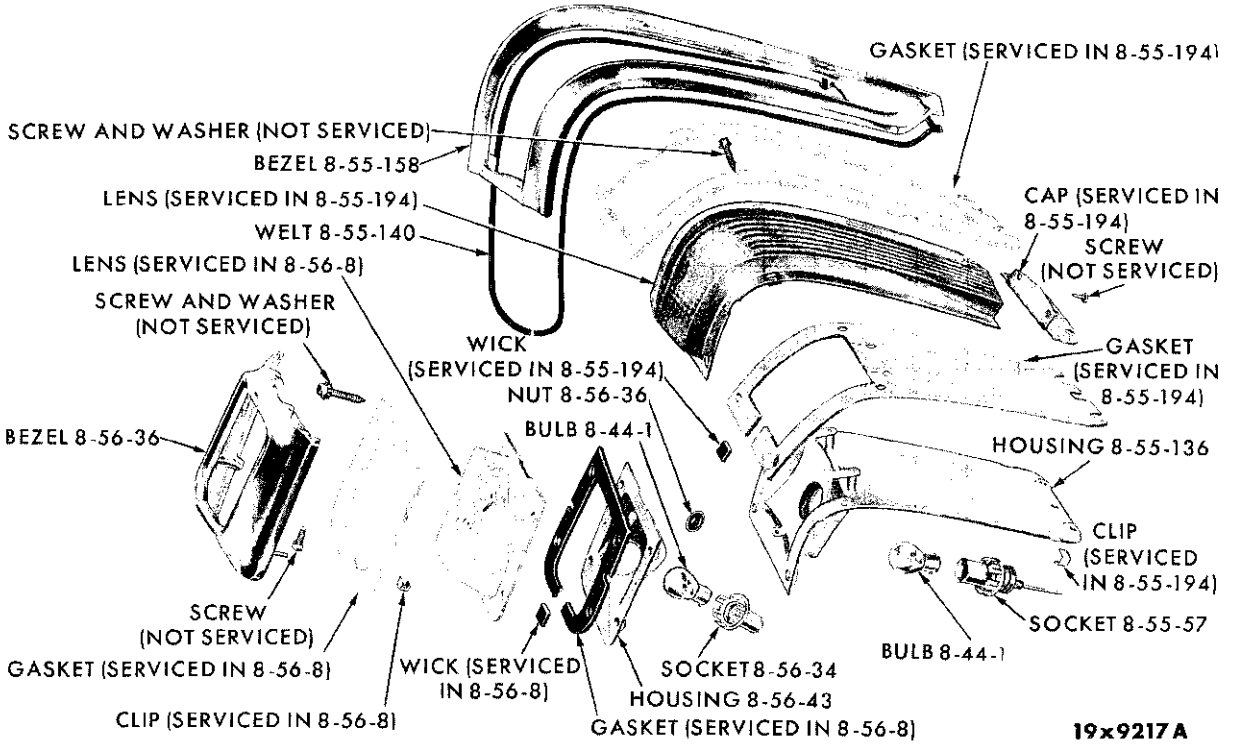

19x9217A

TAIL, STOP AND BACK-UP LAMP - DODGE SD3 AND CHRYSLER SC1-2-3 (EXCEPT SUBURBAN)

MyMopar.com

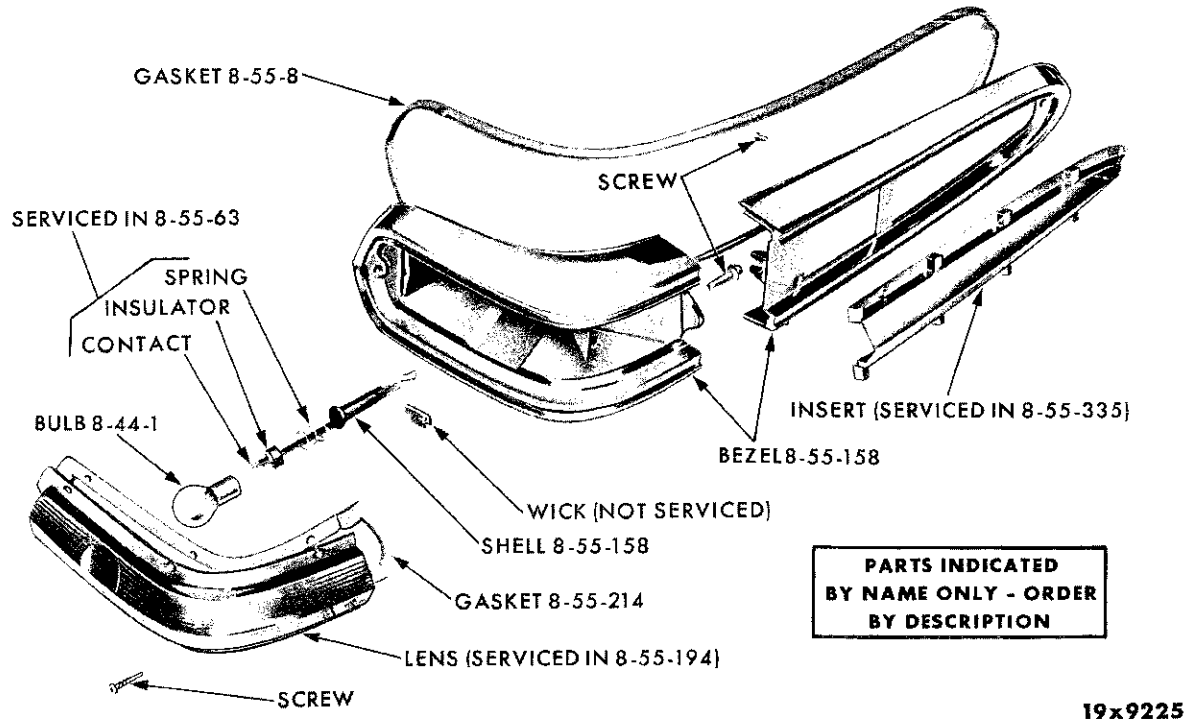

TAIL AND STOP LAMP - DODGE SD3 AND CHRYSLER SC1-3 (SUBURBAN)

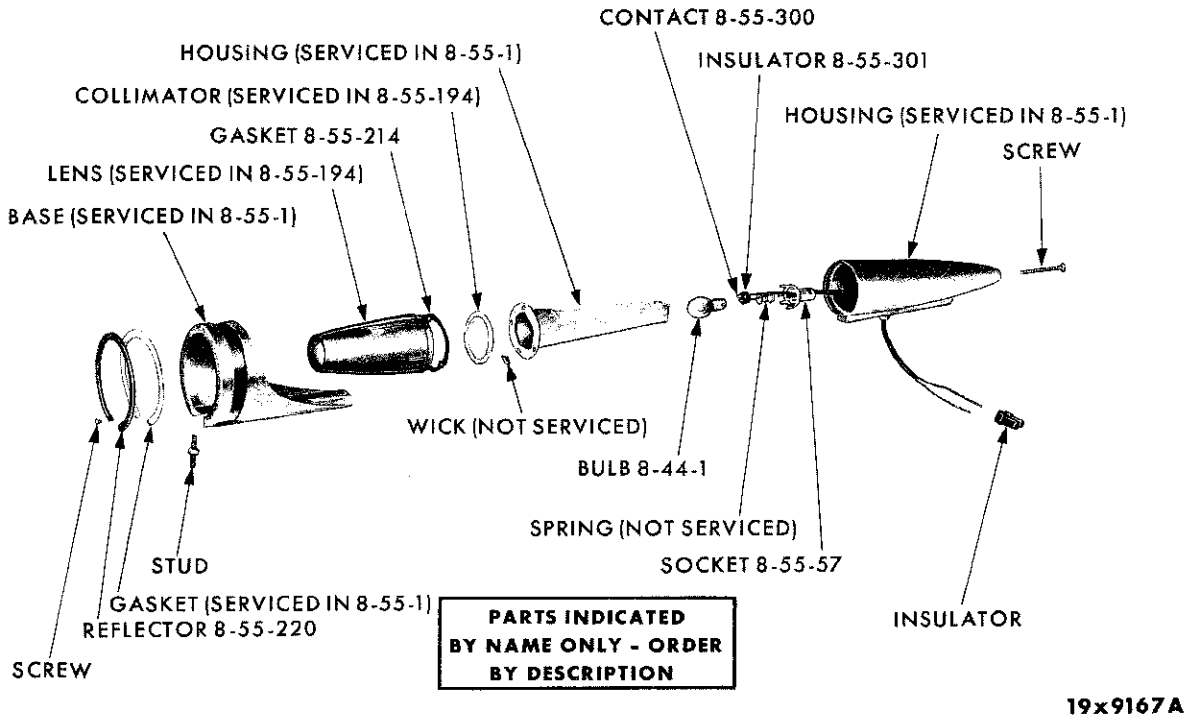

TAIL AND STOP LAMP - IMPERIAL SY1

MyMopar.com

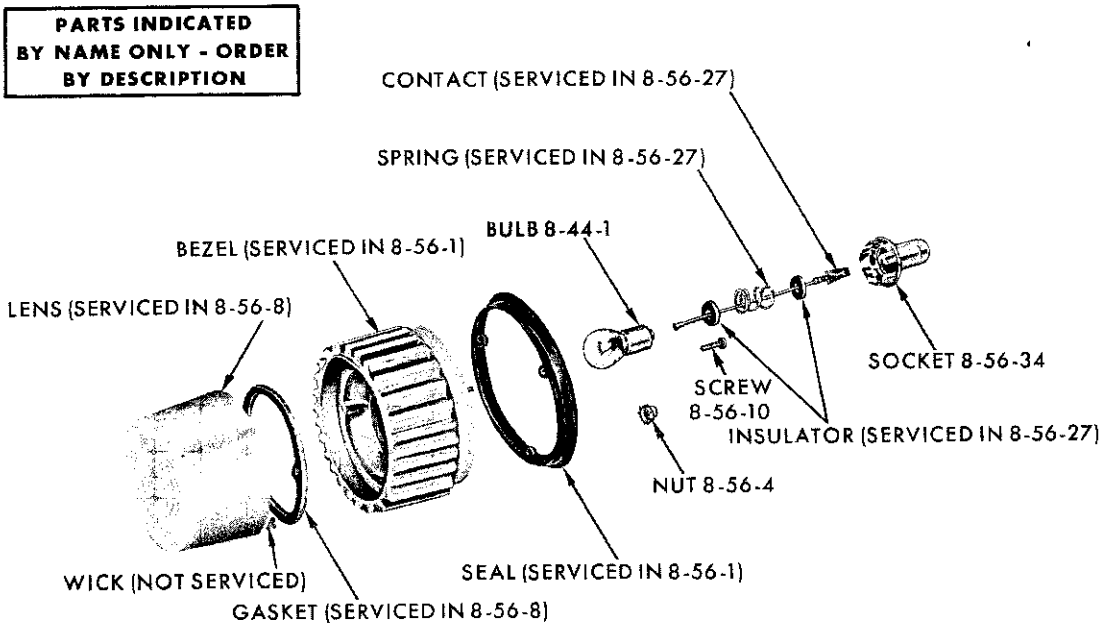

BACK-UP LAMP - PLYMOUTH SP1-2 (EXCEPT SUBURBAN)

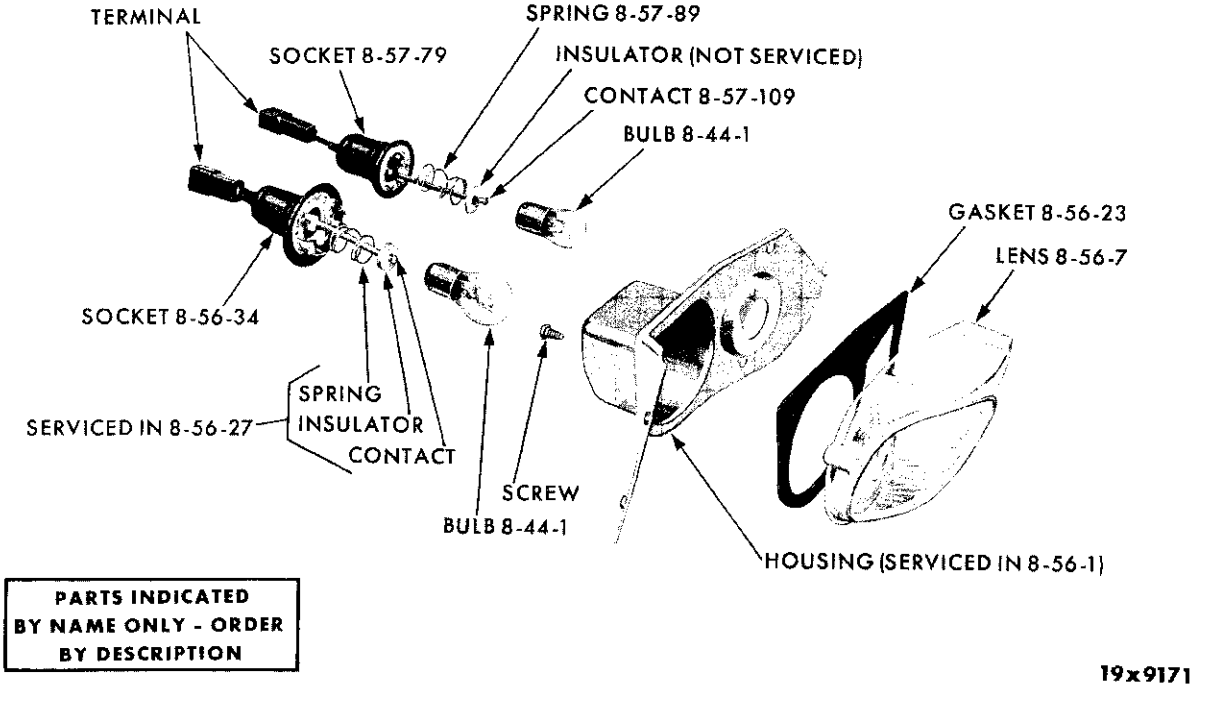

BACK-UP AND LICENSE LAMP - PLYMOUTH SP1-2 (SUBURBAN)

MyMopar.com

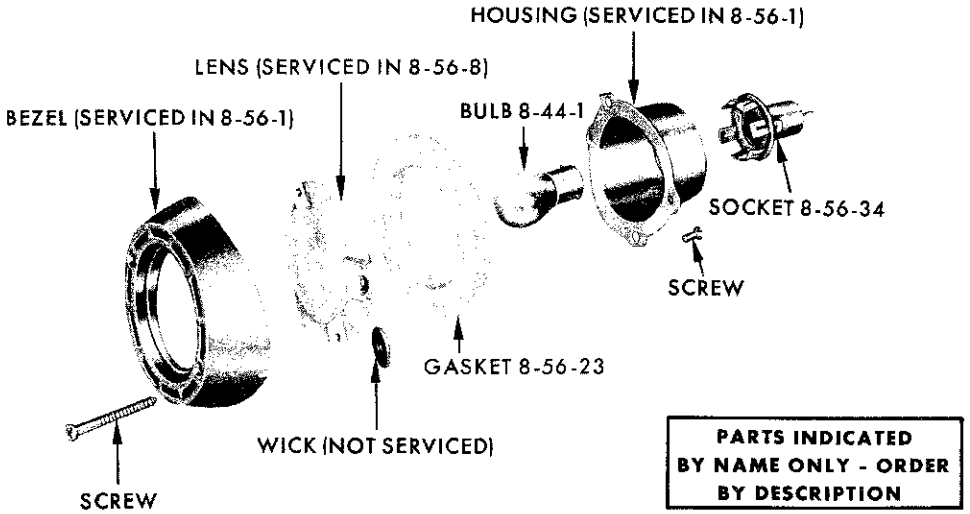

19x8737A

BACK-UP LAMP - VALIANT SV1

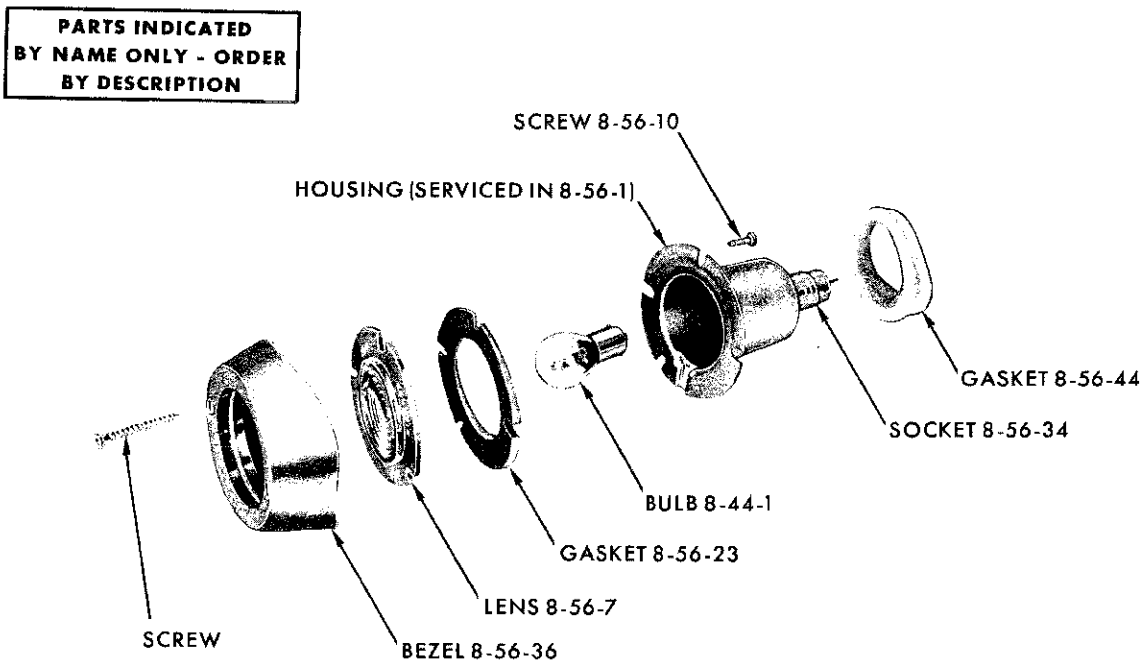

19x8942A

BACK-UP LAMP - LANCER SL1

MyMopar.com

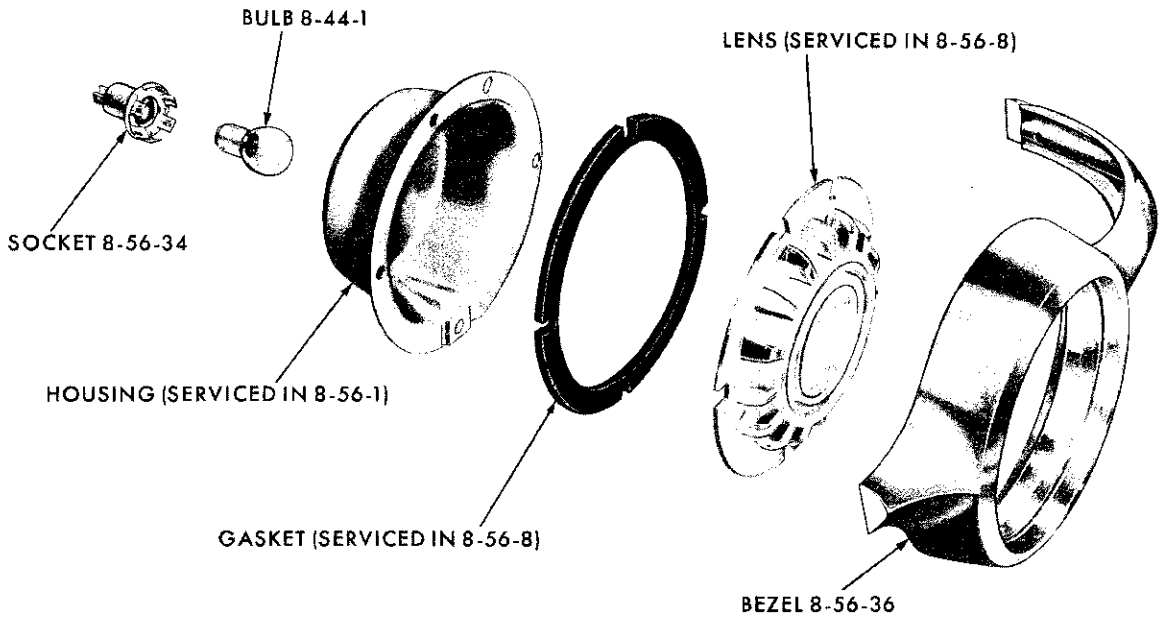

19x9192

BACK-UP LAMP - DODGE SD1-2 (EXCEPT SUBURBAN)

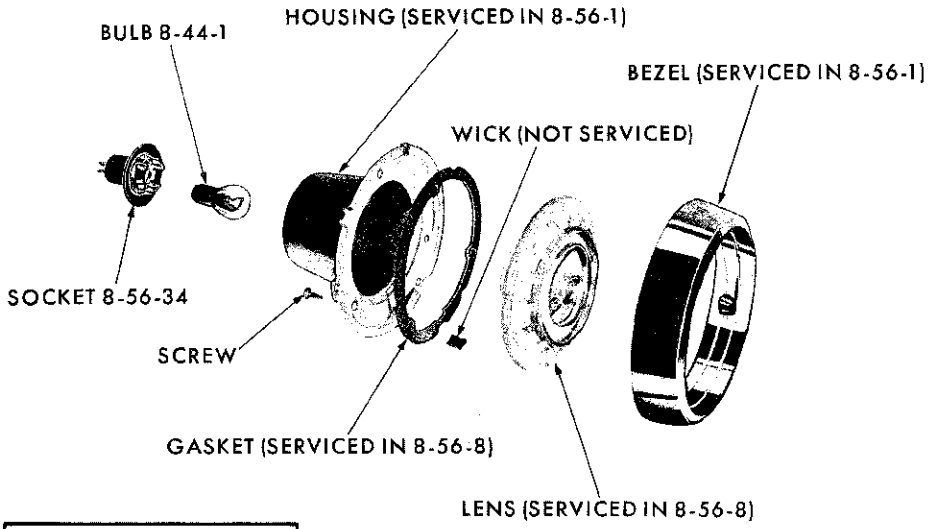

PARTS INDICATED BY NAME ONLY - ORDER BY DESCRIPTION

19x9190

BACK-UP LAMP - DODGE SD1-2 (SUBURBAN)

MyMopar.com

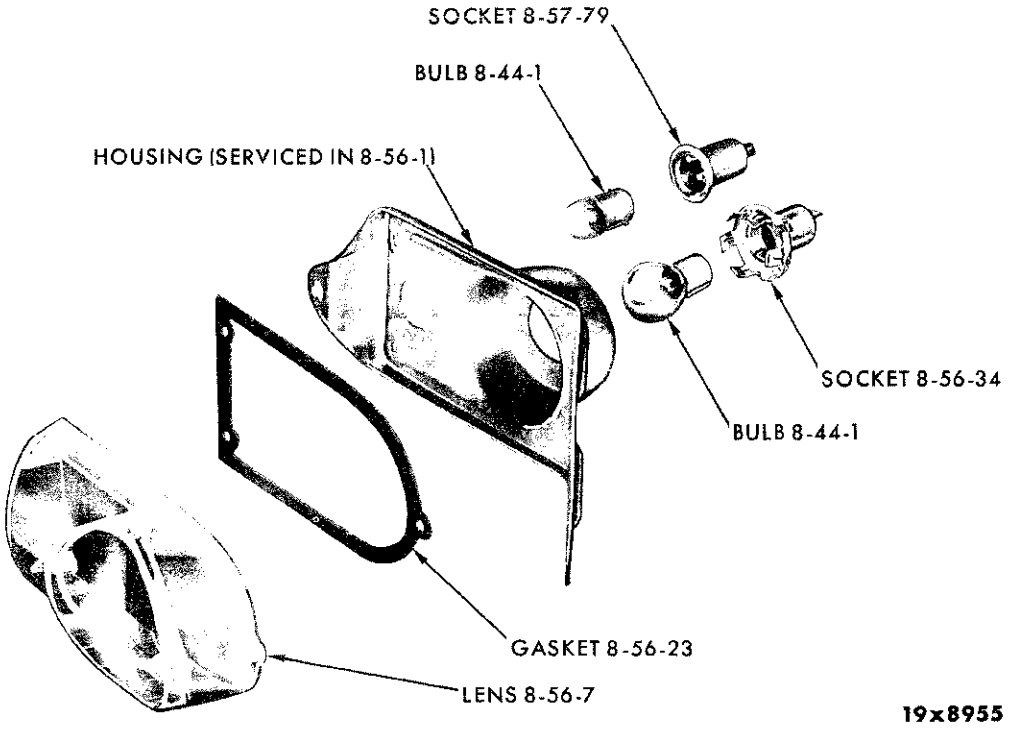

BACK-UP AND LICENSE LAMP - CHRYSLER SC1-2-3 (SUBURBAN)

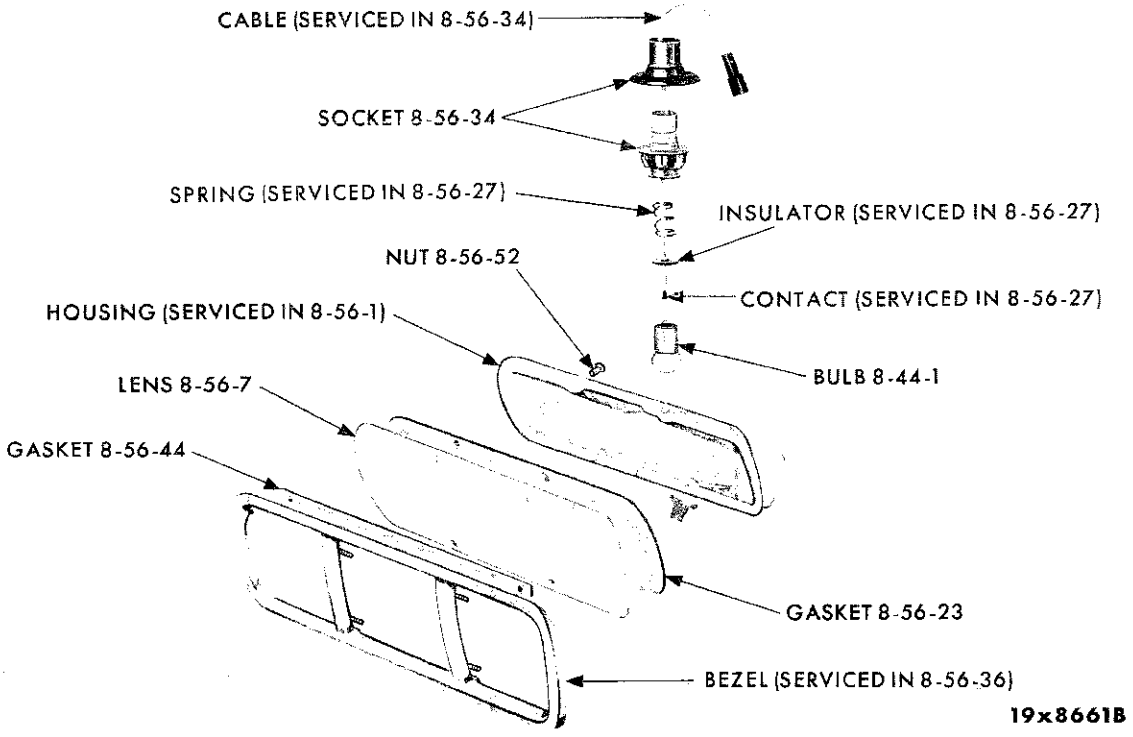

BACK-UP LAMP - IMPERIAL SY1

MyMopar.com

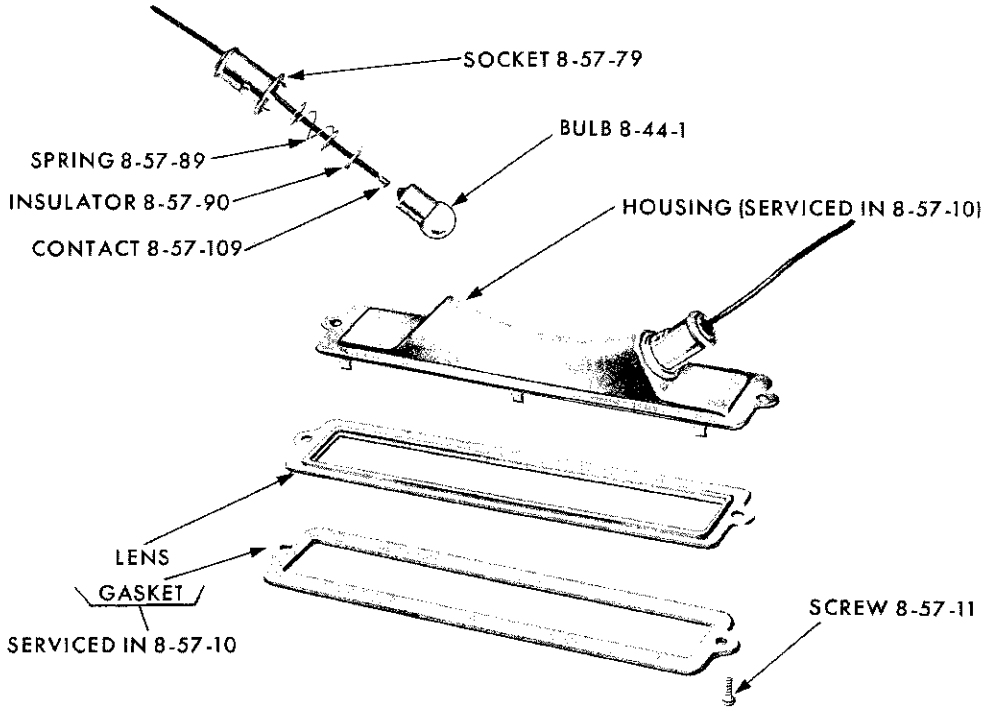

19x9227

LICENSE LAMP - PLYMOUTH SP1-2 (EXCEPT SUBURBAN)

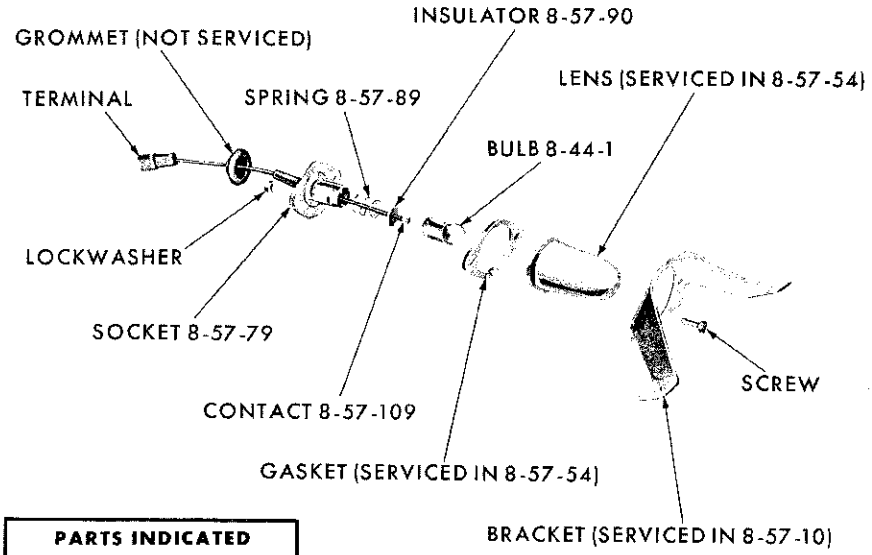

PARTS INDICATED BY NAME ONLY - ORDER BY DESCRIPTION

19x9188

LICENSE LAMP - VALIANT SV1 AND LANCER SL1

MyMopar.com

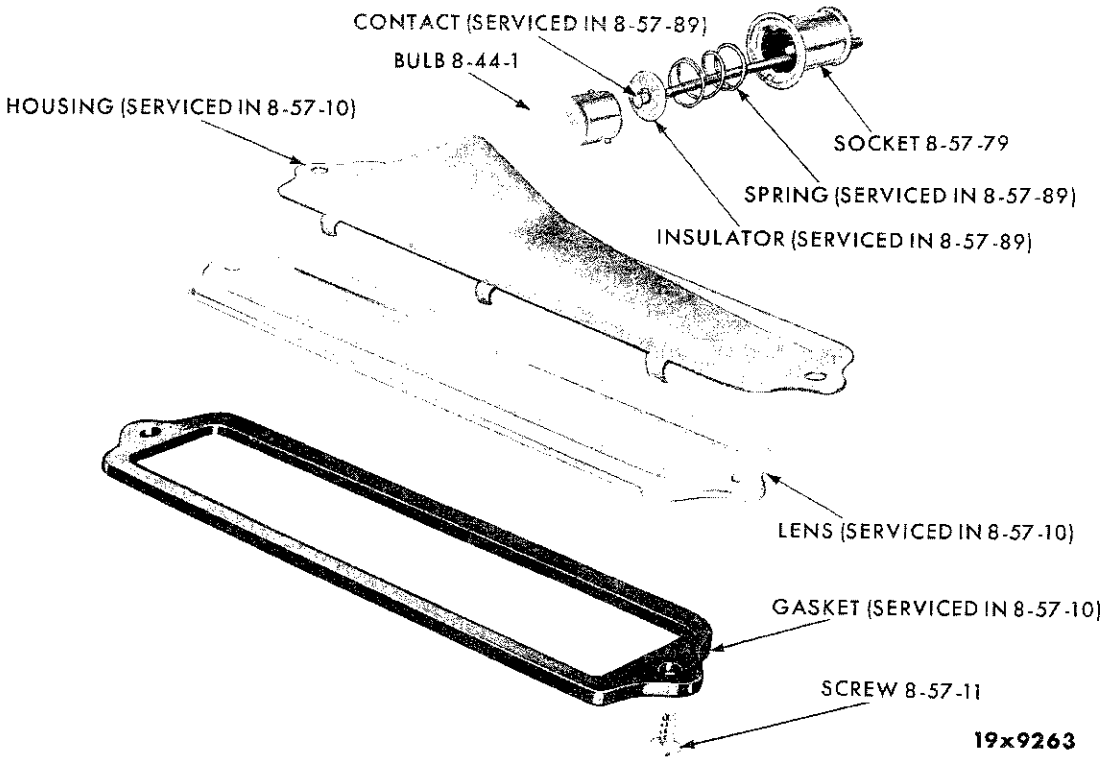

LICENSE LAMP - DODGE SD1-2 (EXCEPT SUBURBAN)

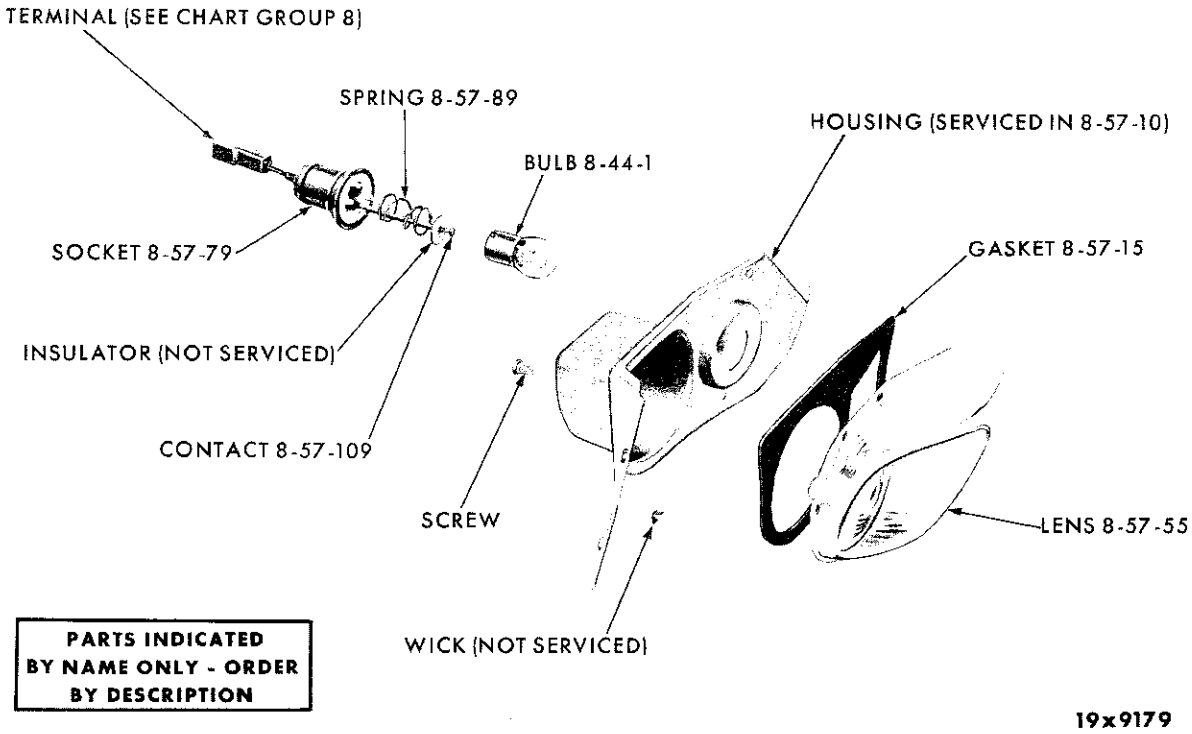

LICENSE LAMP - DODGE SD1-2 (SUBURBAN)

MyMopar.com

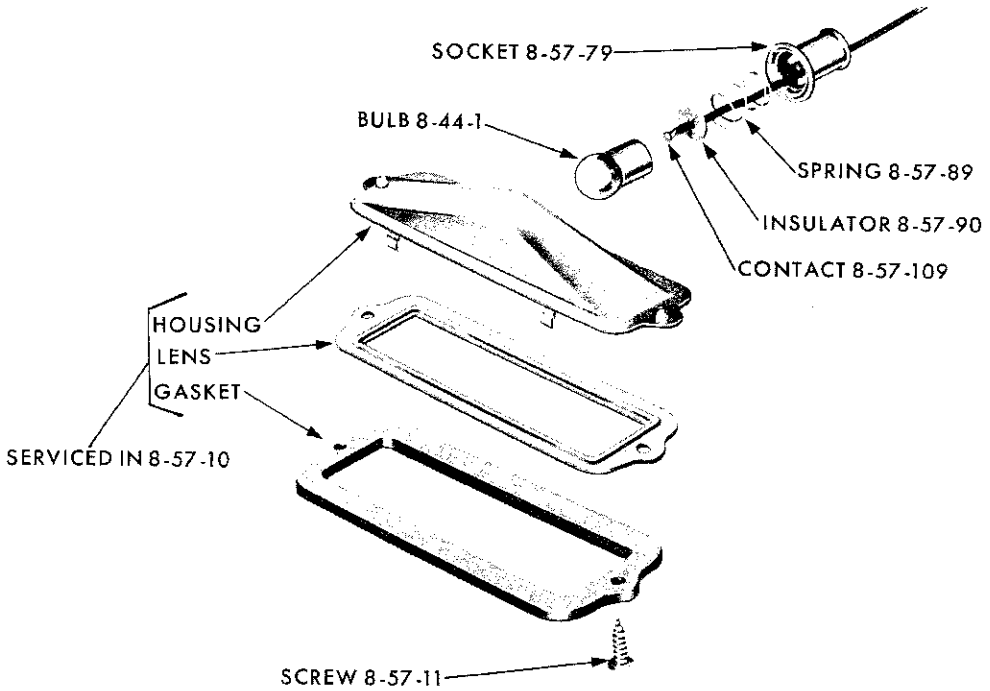

19x9218

LICENSE LAMP - CHRYSLER SC1-2-3 (EXCEPT SUBURBAN)

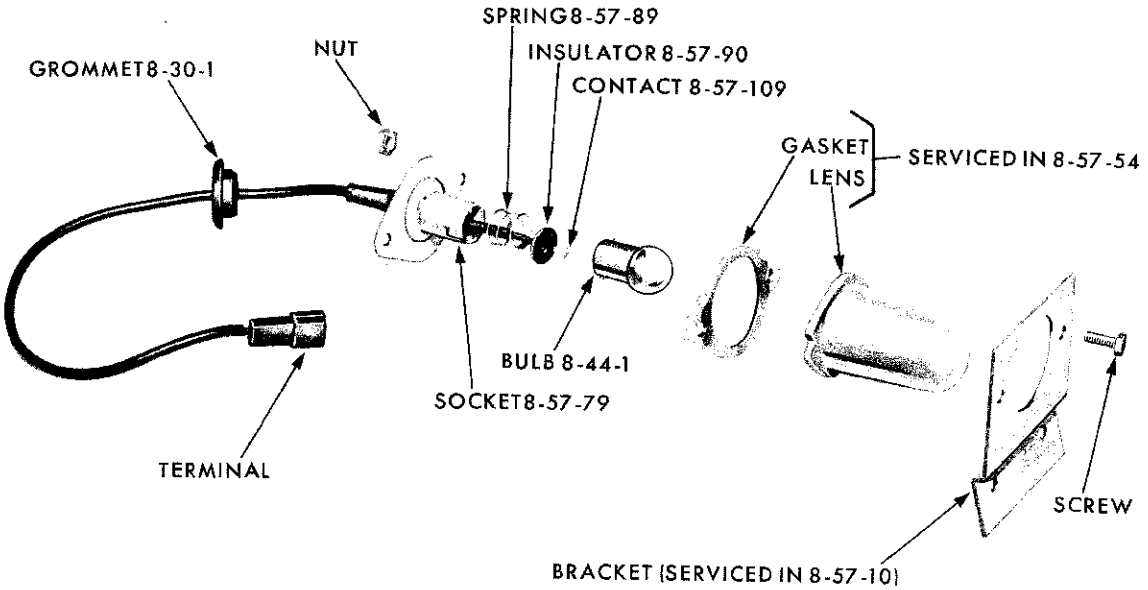

PARTS INDICATED BY NAME ONLY - ORDER BY DESCRIPTION

19x9216

LICENSE LAMP - IMPERIAL SY1

MyMopar.com

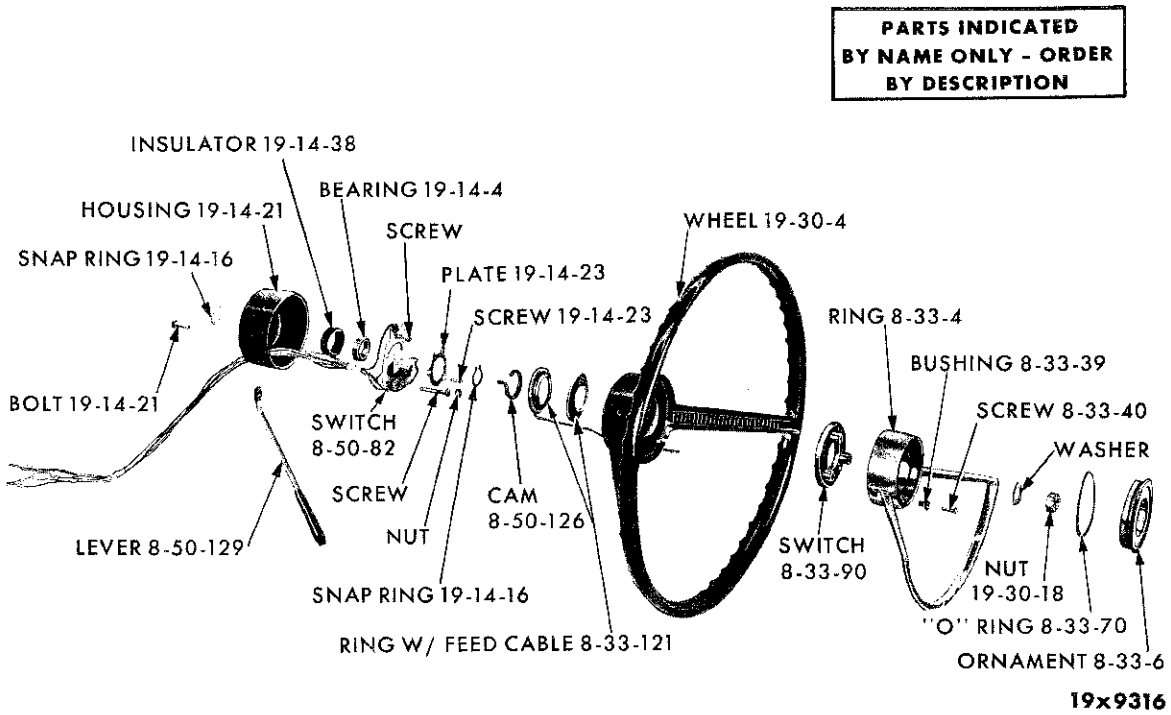

HORN AND DIRECTIONAL SIGNAL CONTROLS - VALIANT SV1 AND LANCER SL1

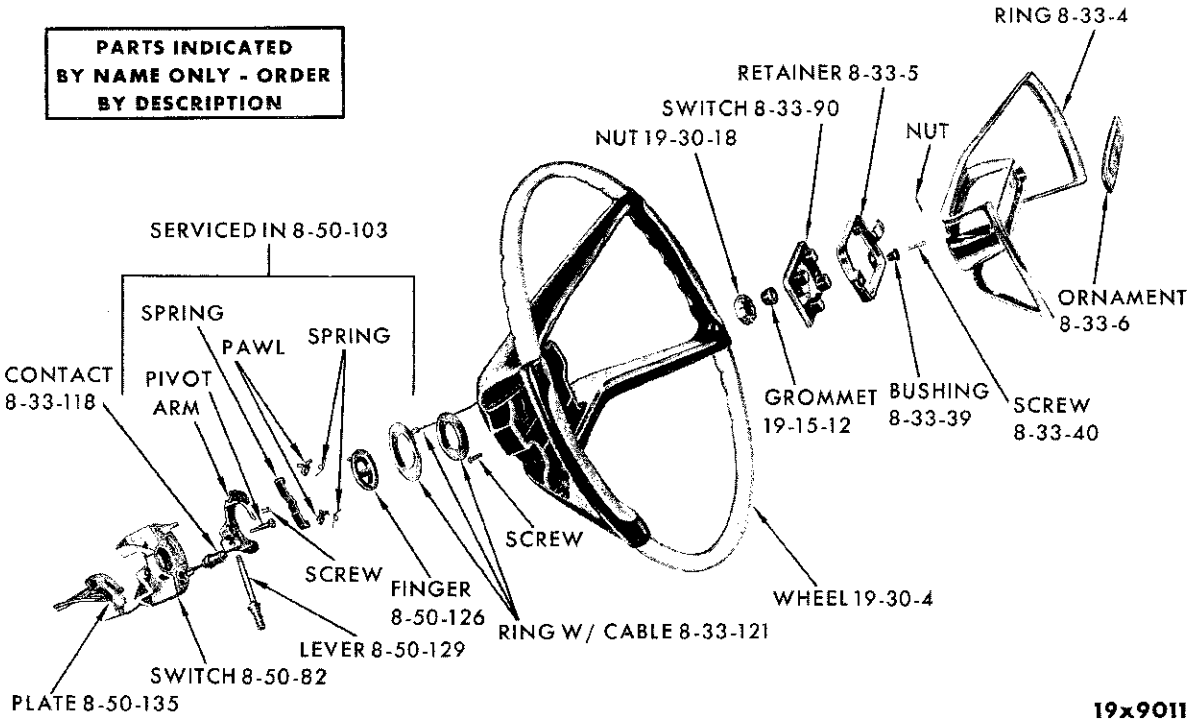

HORN AND DIRECTIONAL SIGNAL CONTROLS - DODGE SD3

MyMopar.com

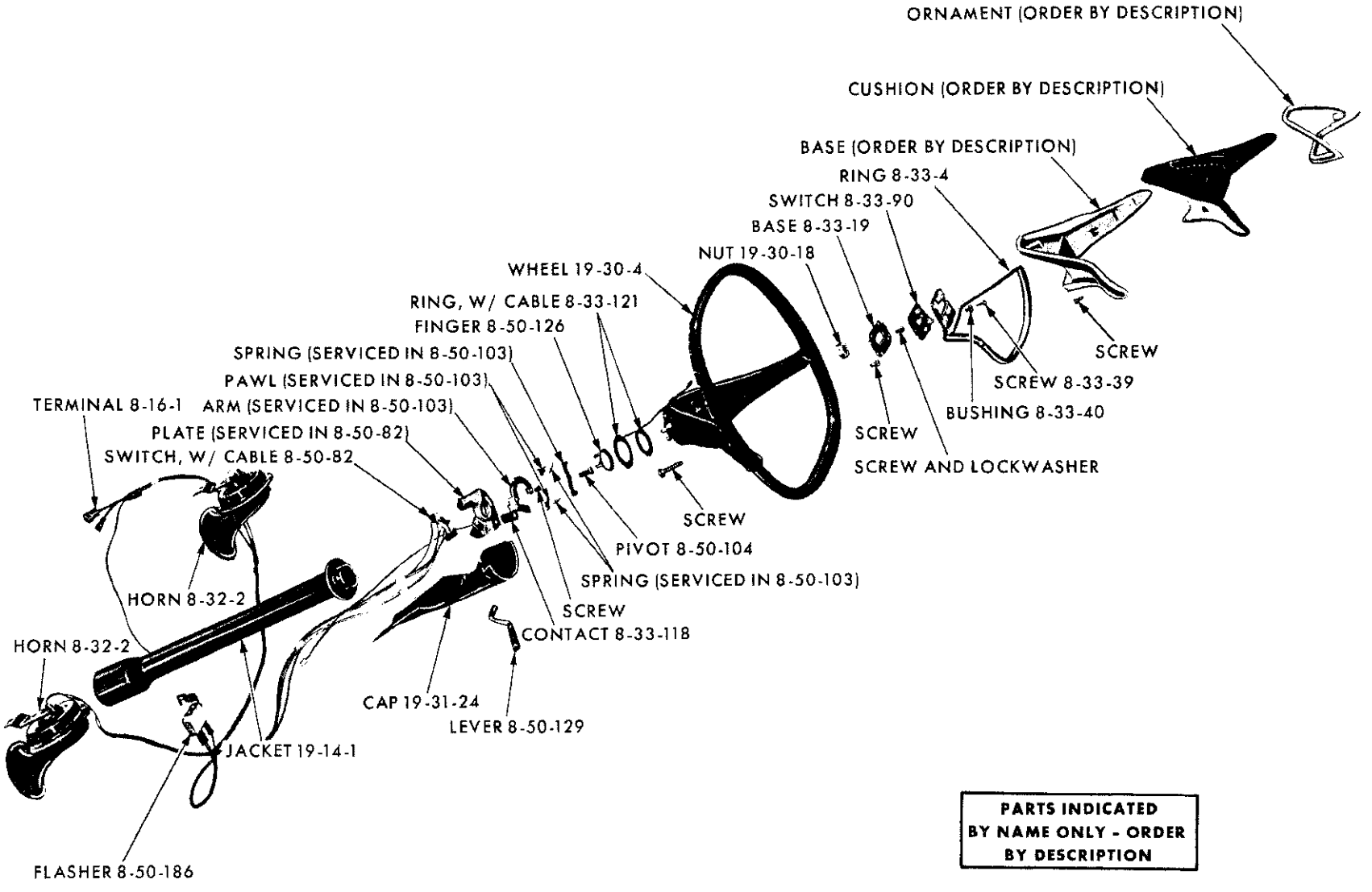

HORN AND DIRECTIONAL SIGNAL CONTROLS - IMPERIAL SY1

MyMopar.com

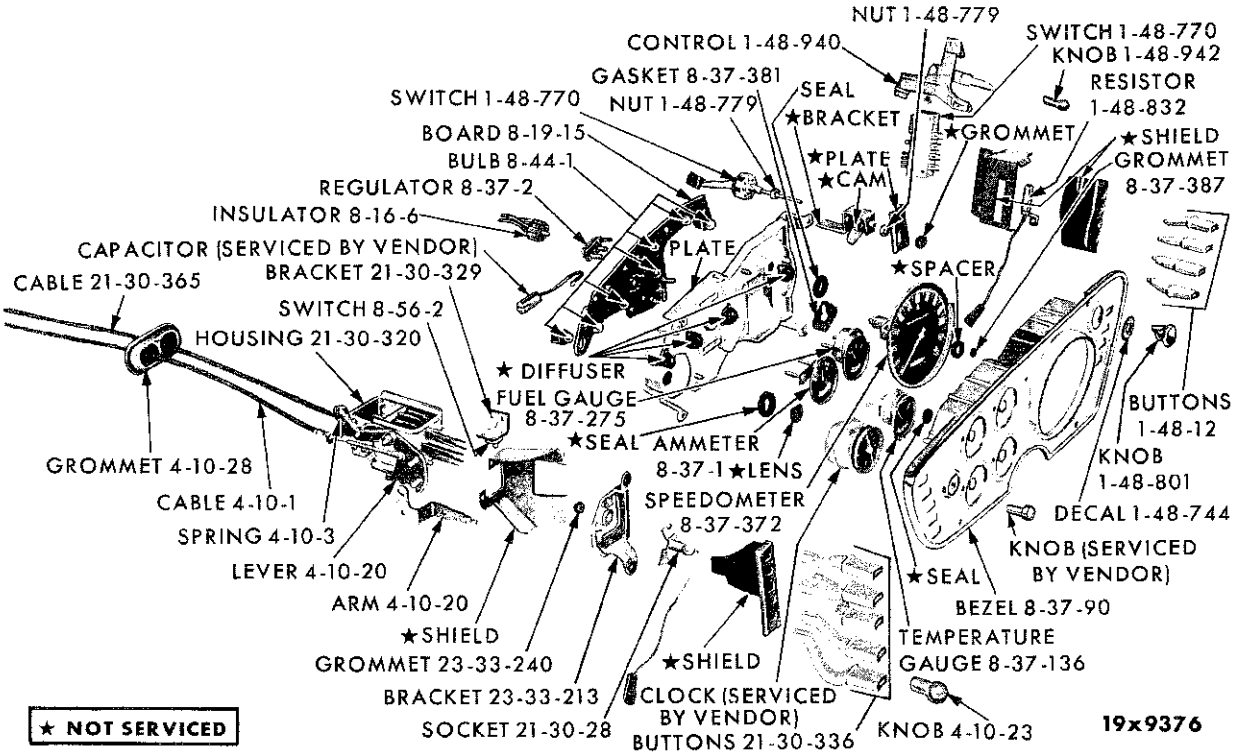

INSTRUMENT CLUSTER - PLYMOUTH SP1-2

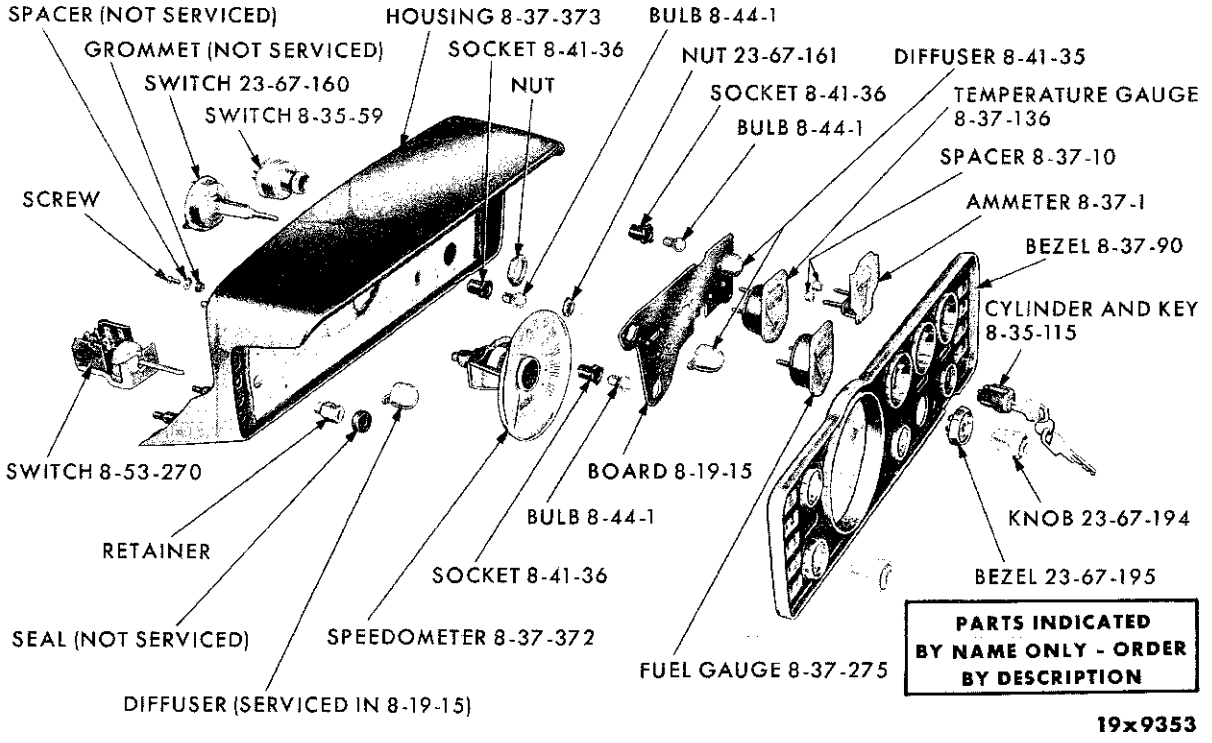

INSTRUMENT CLUSTER - VALIANT SV1

MyMopar.com

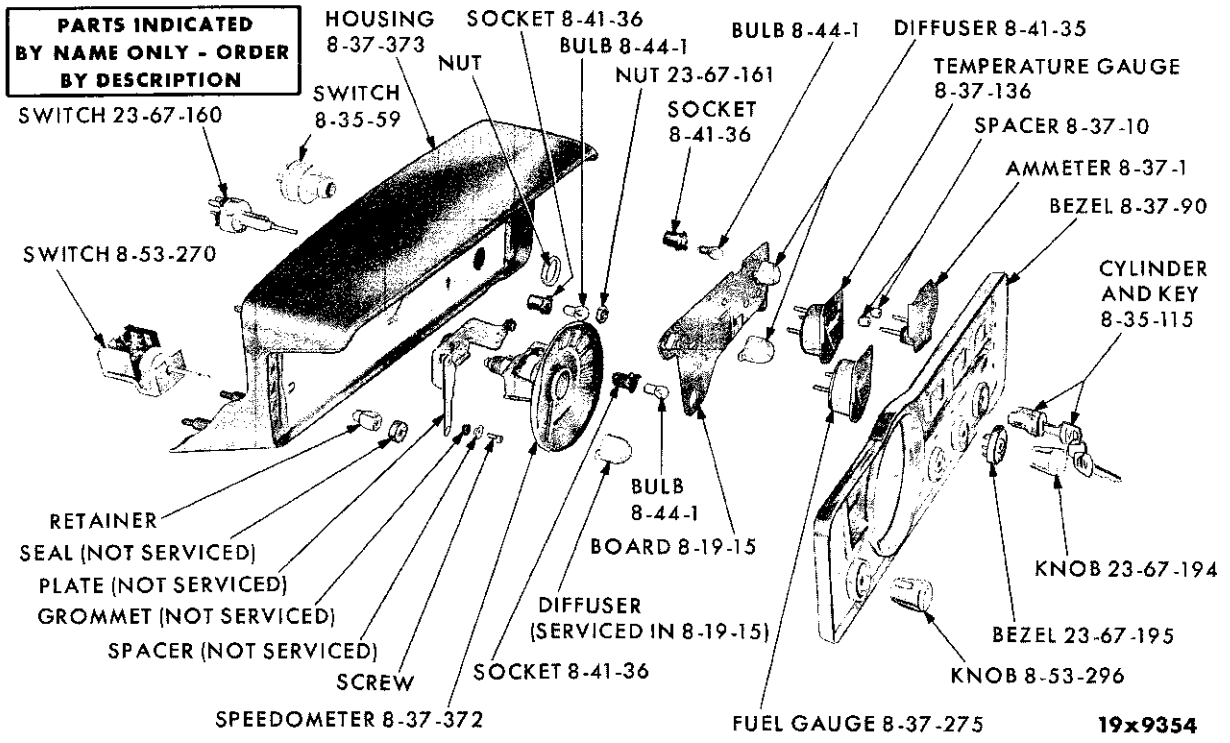

INSTRUMENT CLUSTER - LANCER SL1

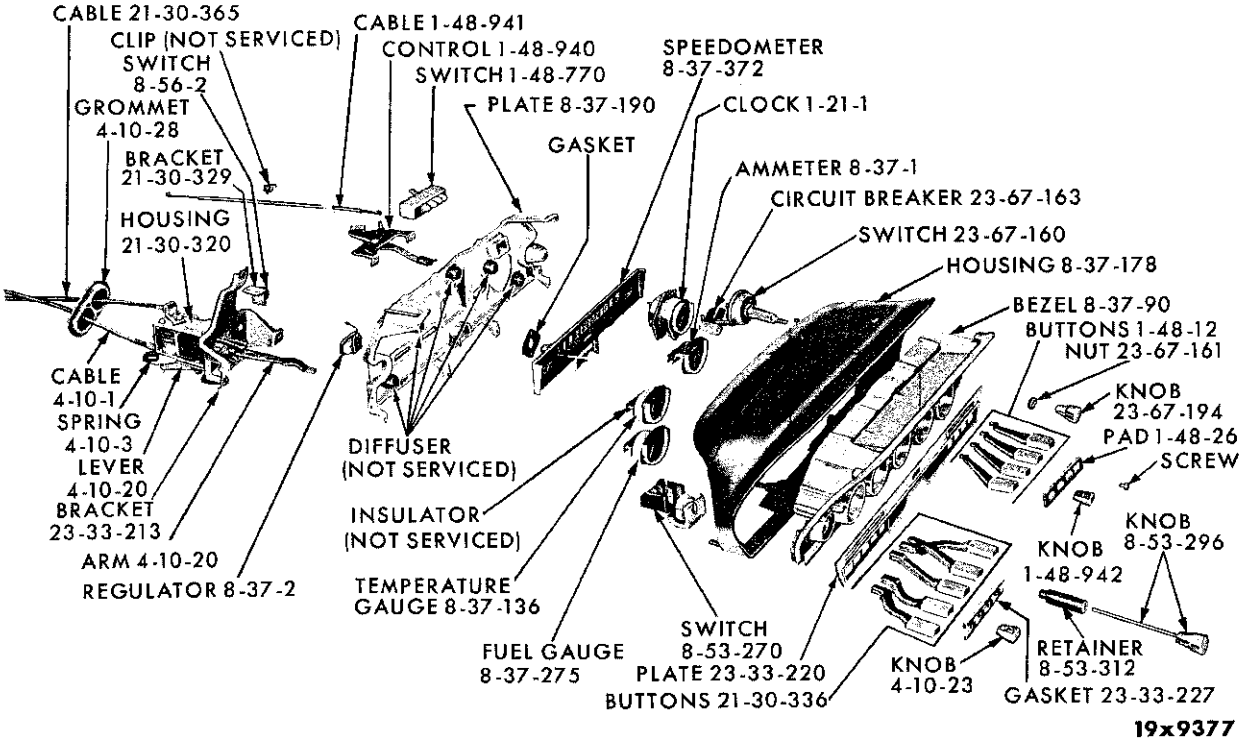

INSTRUMENT CLUSTER - DART SD1-2

MyMopar.com

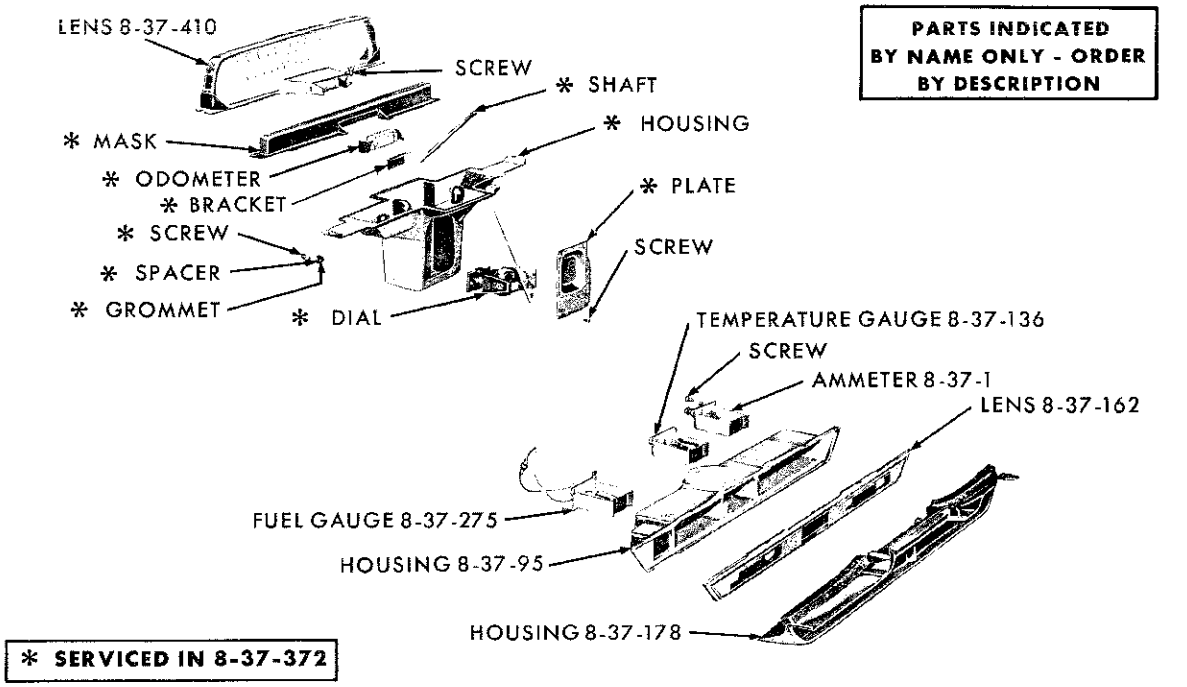

INSTRUMENT CLUSTER - DODGE SD3

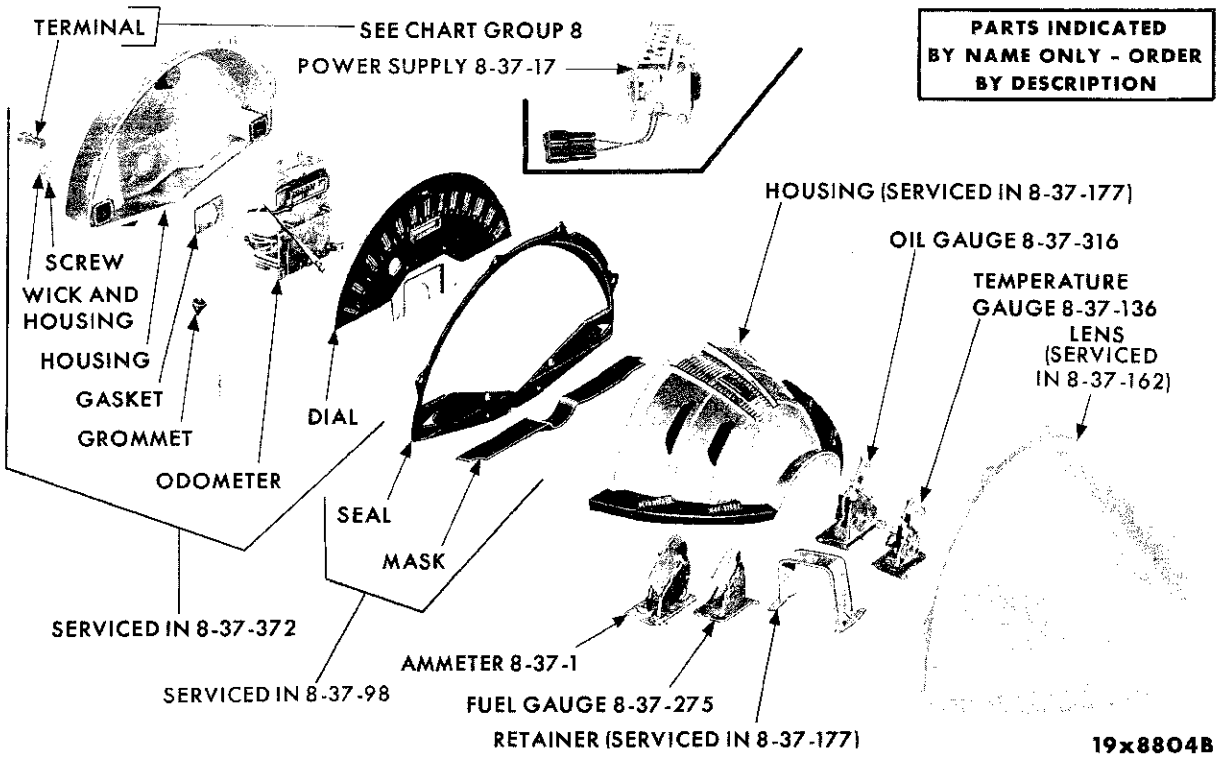

INSTRUMENT CLUSTER - CHRYSLER SC1-2-3

MyMopar.com

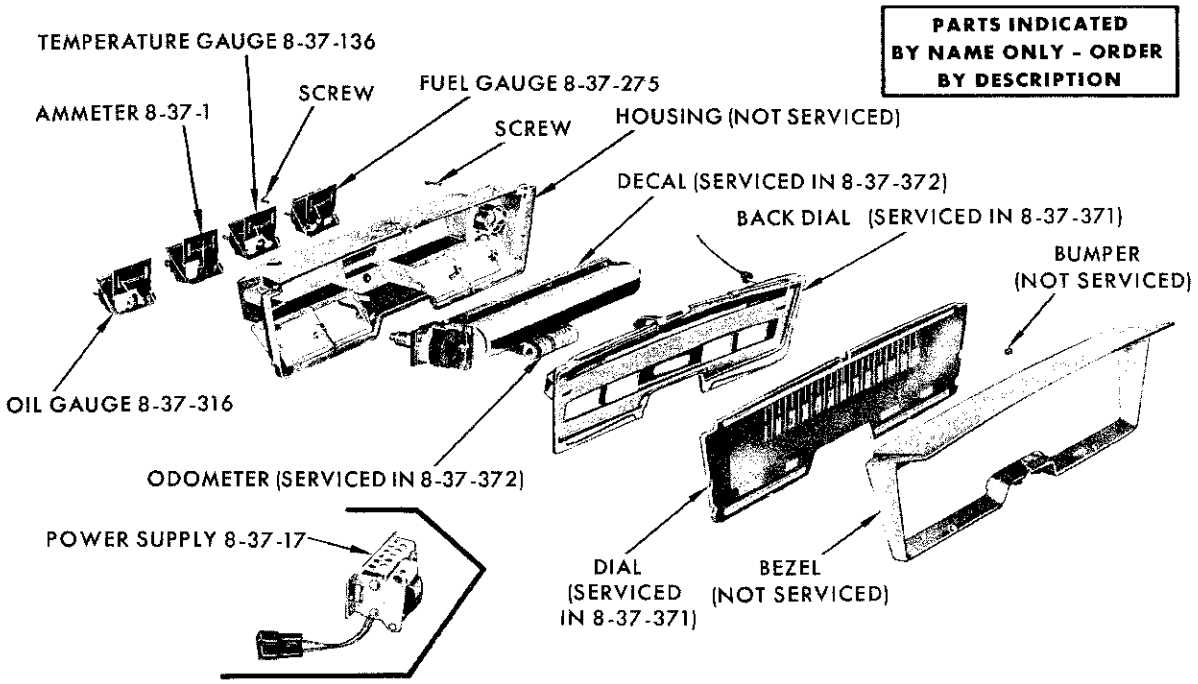

INSTRUMENT CLUSTER - IMPERIAL SY1

NOTES

MyMopar.com

PLUG AND WIRING 1793764 1793763	PLUG AND WIRING 1793760 1793760	PLUG AND WIRING 1793761 1793762	PLUG AND WIRING 1793765 1793766	1819362 CONNECTOR
CONNECTOR (10) TERMINAL (20) **1843444 PACKAGE**	CONNECTOR 1842003 1842009 TERMINAL	INSULATOR (10) TERMINAL (10) **2240264 PACKAGE**	1770660 TERMINAL 200156 TERMINAL	1798521 ADAPTER 2291663 INSULATOR
TERMINAL (10) (SILVER PLATED) **1819836 PACKAGE**	TERMINAL (10) **1779654 PACKAGE**	INSULATOR (1) TERMINAL (6) **1843222 PACKAGE**	INSULATOR (1) TERMINAL (6) **1843223 PACKAGE**	INSULATOR (10) TERMINAL (10) **2240536 PACKAGE**
TERMINAL(FEMALE) INSULATOR(FEMALE) TERMINAL(MALE) INSULATOR(MALE) **2298882 PACKAGE**	INSULATOR (10) TERMINAL (10) **2084421 PACKAGE**	CONNECTOR (1) TERMINAL (3) **1879609 PACKAGE**	INSULATOR (1) TERMINAL (8) **2084424 PACKAGE**	INSULATOR (1) TERMINAL (8) **2084425 PACKAGE**
INSULATOR (10) TERMINAL (20) **1843224 PACKAGE**	INSULATOR (10) TERMINAL (10) **1843225 PACKAGE**	INSULATOR (10) TERMINAL (FEMALE)(10) TERMINAL (MALE)(10) **1843226 PACKAGE**	INSULATOR (10) TERMINAL (FEMALE)(10) **1843227 PACKAGE**	2258651 INSULATOR 2258754 INSULATOR
2258591 TERMINAL	2258118 TERMINAL	2290069 TERMINAL		
2258102 INSULATOR	2258590 TERMINAL	2290207 TERMINAL		

NUMBERS IN PARENTHESIS INDICATE QUANTITY INCLUDED IN PACKAGE

19x9051D

CLIP CHART

MyMopar.com

MoPar BATTERIES

Now, longer battery life is assured in the car or on the shelf because all plates in new MoPar Batteries are sealed with a super-hard coating of silver and cobalt to resist internal corrosion caused by overcharging. A new Plastic Seal on the positive terminal assures customers that every MoPar Battery is sealed at the factory and remains sealed until installed for use. The peak power and performance manufactured into each MoPar Battery cannot be used until this seal is broken.

ELECTROLYTE
1843 124 QT.
2084 649 5 GAL.

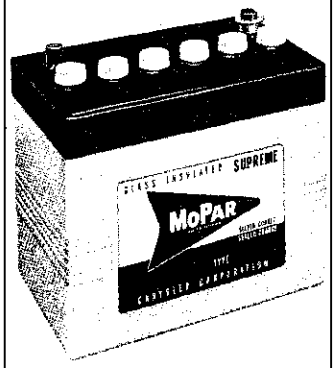

MoPar SUPREME - The ultimate in POWER-PLUS service - the highest quality battery available for longest life!

- SILVER-COBALT SEALED PLATES
- SPUN-GLASS INSULATION

MoPar DELUXE - A power-packed battery to meet the demands of the greatest number of drivers.

- SILVER-COBALT SEALED PLATES
- BIPLAK INSULATION

MoPar SPECIAL - Ideal for cost-conscious customers. Perfect for your used cars. . . LOW PRICED and a natural leader to attract battery prospects.

- SILVER-COBALT SEALED PLATES
- BIPLAK INSULATION

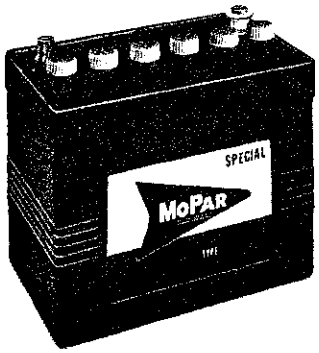

1962	TYPE	WET CHARGED	DRY CHARGED	WET CHARGED	DRY CHARGED	WET CHARGED	DRY CHARGED
VALIANT AND LANCER	20H	-	-	2098 447	2098 448	-	-
HEAVY DUTY	24	2098 039	2098 030	2098 041	2098 042	2098 053	-
PLYMOUTH AND DODGE							
STANDARD	24	2098 029	2098 030	2098 041	2098 042	2098 053	-
HEAVY DUTY	27H	2098 039	2098 040	2098 051	2098 052	-	-
CHRYSLER							
NEWPORT AND 300							
STANDARD	24	2098 029	2098 030	2098 041	2098 042	-	-
HEAVY DUTY	27H	2098 039	2098 040	2098 051	2098 052	-	-
NEW YORKER	27H	2098 039	2098 040	2098 051	2098 052	-	-
IMPERIAL							
ALL	27H	2098 039	2098 040	2098 051	2098 052	-	-

FOR COMPLETE PAST MODEL APPLICATION AND FOR OTHER MAKE VEHICLES SEE MOPAR BATTERY CHART AND PRICE LIST

MyMopar.com

CODE	PART NAME AND DESCRIPTION	CYL.	PER CAR	VALIANT LANCER	PLYMOUTH DODGE	CHRYSLER IMPERIAL
8-01-0	**BATTERY AND CABLE**					
8-01-4	CABLE, Battery Ground, 41" long	6	1	1879 945	1879 945	
	23" long	8	1	---- ---	1879 944	1879 944
8-01-7	CLIP, Battery Cable, Left Side Rail Front Reinforcement, SP2, SP2	8	1	---- ---	6015 242	
8-01-9	CABLE, Jumper, 35" long, No. 14 Gauge		★	2275 200	2275 200	2275 200
8-01-11	BOLT, Battery Ground Cable Clamp		1	1622 535	1622 535	1622 535
8-01-12	NUT, Battery Ground Cable Clamp Bolt		1	1622 536	1622 536	1622 536
8-01-17	CABLE, Battery to Starter, 23" long	6	1	1879 944		
	41" long	6	1	---- ---	1879 945	
	Except 413 cu. in. Eng., SP2, SD2, 48" long	8	1	---- ---	*2230 938	
	w/413 cu. in. Eng., SP2, SD2, 41" long	8	1	---- ---	*1879 945	
	Battery to Starter Relay, 23" long, SD3	8	1	---- ---	1879 944	1879 944
	Starter Relay to Starter, 29" long, SD3	8	1	---- ---	1879 938	1879 938
8-01-20	BOLT, Battery to Starter Cable Clamp		1	1622 535	1622 535	1622 535
8-01-21	NUT, Battery to Starter Cable Clamp Bolt		1	1622 536	1622 536	1622 536
8-01-23	SCREW, Battery Cable Clip, Battery Tray	6	1	---- ---	6022 503	
	Left Side Shield	8	1	---- ---	---- ---	6006 121
8-01-25	NUT, Battery Cable Clip, Battery Tray	6	1	---- ---	6010 006	
8-05-0	**DOME LAMP AND SWITCH**					
8-05-6	HOUSING, Dome Lamp, Sub.	6	1	2259 366		
	Except Cv. Cp., SC1, SC2, SC3		1	---- ---	1963 603	1963 603
	w/SWITCH, Rear, Sub., SC1, SC3		1	---- ---	2161 308	2161 308
	Sp. 4 D. and Sp. Cl. Cp., SY1	8	1	---- ---	---- ---	1902 237
8-05-8	BEZEL, Dome Lamp, except Cv. Cp., SC1, SC2, SC3		1	---- ---	2166 743	2166 743
	BEZEL and LENS, Rear, Sub., SC1, SC3		1	---- ---	2161 307	2161 307
8-05-11	RETAINER, Dome Lamp Switch, SD1, SD2		1	---- ---	2258 755	
8-05-12	SOCKET, Dome Lamp	6	1	1704 875		
	w/BRACKET, except Cv. Cp., SC1, SC2, SC3		1	---- ---	2096 499	2096 499
	Sp. 4 D. and Sp. Cl. Cp., SY1	8	1	---- ---	---- ---	1704 875
8-05-14	SWITCH, Dome Lamp, SP1, SP2, SD1, SD2		1	2298 855	2275 587	
	SD3	8	1	---- ---	2209 329	
	Sp. Cl. Cp. and Sp. 4 D., SY1	8	1	---- ---	---- ---	2096 180
8-05-16	KNOB and STEM PACKAGE, Dome Lamp Switch Control, SL1	6	1	2275 585		
	KNOB and STEM PACKAGE, SV1	6	1	2298 883		
	KNOB, SP1, SP2		1	---- ---	2258 211	
	SD1, SD2, SY1		1	---- ---	2197 383	2258 027
	SD3	8	1	---- ---	2257 477	
	w/STEM, SC1, SC2, SC3	8	1	---- ---	---- ---	2257 951
	w/o Stem, SC1, SC2, SC3	8	1	---- ---	---- ---	2257 955
8-05-17	SPRING, Dome Lamp Switch Knob Retainer	6	1	2076 145		
8-05-20	BEZEL, Dome Lamp Switch, SP1, SP2, SY1 Sp. Cl. Cp. and Sp. 4 D.		1	---- ---	2256 432	2096 181
	SD3	8	1	---- ---	*2097 503	

★ Indicates use as required. Numerals in parentheses ( ) refer to notes. Printed in U.S.A.
⊟ Indicates parts not listed in any previous parts book. Prices and specifications subject to change without notice.
* Indicates change or addition. March 8, 1963 Supersedes May 1, 1962.

MyMopar.com

CODE	PART NAME AND DESCRIPTION	CYL.	PER CAR	VALIANT LANCER	PLYMOUTH DODGE	CHRYSLER IMPERIAL
8-05-0	**DOME LAMP AND SWITCH - Cont'd**					
8-05-23	LENS, Dome Lamp	6	1	2082 579		
	Except Cv. Cp., SC1, SC2, SC3		1	---- ---	2166 676	2166 676
	Sp. 4 D. and Sp. Cl. Cp., SY1	8	1	---- ---	---- ---	1902 298
8-05-24	NUT, Dome Lamp Switch Mounting, SC1, SC2, SC3	8	1	---- ---	---- ---	1971 521
8-05-28	BRACKET, Dome Lamp Mounting, Rear, Sub., SC1, SC3		1	---- ---	2086 597	2086 597
	SUPPORT, w/o Extension, 2 D and 4 D		1	---- ---	2162 502	
	SUPPORT, Sp. 4 D and Sp. Cl. Cp., SY1	8	1	---- ---	---- ---	2419 000
	BRACKET, Housing, Sp. 4 D and Sp. Cl. Cp., SY1	8	1	---- ---	---- ---	1961 031
8-05-29	EXTENSION, Dome Lamp Support, 2 D. and 4 D.		1	---- ---	2292 992	
8-05-31	CONTACT, Socket		★	2256 966	2256 966	2256 966
8-05-32	CORE, Dome Lamp Socket, Rear, Sub., SC1, SC3		1	---- ---	2161 316	2161 316
8-11-0	**QUARTER OR COURTESY LAMP**					
8-11-6	SWITCH, Courtesy Lamp, on Console, SP2-P, SD2-P	8	1	---- ---	2291 106	
8-11-8	SOCKET and WIRES, Rear Pocket Panel Courtesy Lamp, CV. Cp., SP2, SD2, SY1		2	---- ---	1963 479	1963 479
	Floor Console, SP2-P, SD2-P	8	1	---- ---	1963 479	
	Quarter Arm Rest Courtesy Lamp, Cv. Cp., SD3, SC1, SC2	8	2	---- ---	1963 479	1963 479
8-11-11	NUT, Courtesy Lamp Switch Mounting, on Console, SP2-P, SD2-P	8	1	---- ---	2291 107	
8-11-12	LENS and RETAINER, Rear Pocket Panel Courtesy Lamp Bezel, Cv. Cp., SP2, SD2, SY1	8	2	---- ---	1623 132	1623 132
	Floor Console, SP2-P, SD2-P	8	1	---- ---	1623 132	
	Quarter Arm Rest Courtesy Lamp, Cv. Cp., SD3, SC1, SC2	8	2	---- ---	1623 132	1623 132
8-12-0	**AUTOMATIC DOOR LAMP SWITCH**					
8-12-1	LAMP, Open Door Indicator, 4 D.		1	2298 767	2298 767	
8-12-2	SWITCH, Automatic Door Lamp, w/Elbow Type Sleeve Connector		2	1972 329	1972 329	1972 329
	w/Straight Type Sleeve Connector		2	1971 931	1971 931	*1971 931
8-12-3	SOCKET, Open Door Indicator Lamp, 4 D. Taxi		1	1314 619	1314 619	
8-12-17	CONTACT, Open Door Indicator Light Socket		★	*2256 966	*2256 966	*2256 966
8-13-0	**TRUNK LAMP**					
8-13-1	SWITCH, Socket and Cable, Trunk Lamp, SY1	8	1	---- ---	---- ---	1770 786
8-13-2	SWITCH, Trunk Lamp, except Sub., SC1, SC2, SC3.		1	1972 426	1972 426	1972 426
8-13-3	SOCKET and BRACKET, Trunk Lamp, except Sub., SC1, SC2, SC3		1	2096 857	2096 857	2096 857
8-13-4	SPRING, Trunk Lamp Socket		★	1842 340	1842 340	1842 340
8-13-5	INSULATOR, Trunk Lamp Socket		★	858 245	858 245	858 245
8-13-6	CONTACT, Trunk Lamp Socket		★	*2256 966	*2256 966	*2256 966

★ Indicates use as required. Numerals in parentheses ( ) refer to notes. Printed in U.S.A.
Ⓑ Indicates parts not listed in any previous parts book. Prices and specifications subject to change without notice.
March 8, 1963 Supersedes May 1, 1962. * Indicates change or addition.

MyMopar.com

CODE	PART NAME AND DESCRIPTION	CYL.	PER CAR	VALIANT LANCER	PLYMOUTH DODGE	CHRYSLER IMPERIAL
8-15-0	**CHASSIS AND BODY WIRING**					
8-15-2	WIRING, Headlamp and Engine Compartment, SL1, SP1, SP2, SC1, SC2, SC3		1	*2258 439	*2258 425	*2290 132
	SV1, SD1, SD2, SY1		1	*2258 402	*2258 399	*2290 199
	Engine, SP1, SP2 except 413 cu. in. Eng., SD1, SD2 except 413 cu. in. Eng.		1	*2258 406	*2258 423	
	Engine, w/413 cu. in. Eng., SP2, SD2	8	1	---- ---	⊟2291 919	
	Headlamp and Engine, SD3	8	1	---- ---	*2426 146	
8-15-3	BLOCK, w/Mounting Bracket, Fuse, SY1		1	2258 395	2258 395	2258 395
	SC1, SC2, SC3	8	1	---- ---	---- ---	2257 102
8-15-4	WIRING, Body, w/o Back-Up Lamp, except Sub., SV1	6	1	2258 993		
	w/Back-Up Lamp, except Sub., SV1	6	1	2258 994		
	w/Back-Up Lamp, except Sub., SL1	6	1	2290 003		
	w/o Back-Up Lamp, except Sub., SL1	6	1	2258 902		
	w/Tailgate, Sill, Sub.	6	1	2258 879		
	Sill, Sub.	6	1	2258 886		
	w/Tailgate, Rear, Sub., SV1	6	1	2258 850		
	Rear, Sub., SV1	6	1	2290 008		
	Front, except Sub., SP1, SP2, SD1, SD2		1	---- ---	2258 089	
	Rear, w/Back-Up Lamp, except Sub., SP1-L-M, SP2-L-M		1	---- ---	2258 090	
	Rear, w/o Back-Up Lamp, except Sub., SP1-M, SP2-M		1	---- ---	2291 412	
	Rear, w/o Back-Up Lamp, except Sub., SP1-L, SP2-L		1	---- ---	2258 092	
	Rear, w/Back-Up Lamp, except Sub., SP1-H, SP2-H-P		1	---- ---	2291 801	
	Rear, SD2-P	8	1	---- ---	2291 054	
	Console Wiring Console, SP2-P, SD2-P	8	1	---- ---	2291 078	
	Rear, except Sub., SD1, SD2		1	---- ---	2258 084	
	Sub., SP1, SP2, SD1, SD2, SC1, SC3		1	---- ---	2258 076	2258 202
	Sub., SD3	8	1	---- ---	2258 202	
	w/Tailgate, Sub., SD3	8	1	---- ---	2258 731	
	w/Tailgate, Sub., SP1, SP2, SD1, SD2, SC1, SC3		1	---- ---	2258 196	2258 731
	Front, except Sub., SD3, SC1, SC2, SC3	8	1	---- ---	2258 677	2258 677
	Rear, except Sub., SD3, SC1, SC2, SC3	8	1	---- ---	2258 008	2258 008
	Rear, SY1	8	1	---- ---	---- ---	2258 111
	Front, Cv. Cp., SY1	8	1	---- ---	---- ---	2290 133
	Front, Sp. 4 D. and Sp. Cl. Cp., SY1	8	1	---- ---	---- ---	2290 134
8-15-7	FUSE WIRE, Alternator Voltage Regular		1	2275 242	2275 242	2275 242
8-15-13	COVER, Fuse Block, SC1, SC2, SC3	8	1	---- ---	---- ---	2258 860
8-15-32	CLIP, Engine Headlamp Wiring, Front Extension		1	---- ---	6015 288	
	Dome Lamp Wiring, except Cv. Cp.		1	---- ---	6015 288	
	Connector Retaining		★	2291 662	2291 662	2291 662
	Body Wiring, SY1	8	1	---- ---	---- ---	6015 288
8-15-33	SCREW and CLAMP, Wiring Bulkhead Disconnect Terminal		★	2258 751	2258 751	2258 751
	Fuse Block Mounting, SC1, SC2, SC3	8	2	---- ---	---- ---	1901 828
8-15-52	WIRING, Rear Lamp, Sub., SP1, SP2		1	---- ---	2258 074	
	Rear Lamp, Sub., SD3, SC1, SC3	8	1	---- ---	2258 203	2258 203
	w/Tailgate, Sub., SP1, SP2		1	---- ---	2258 197	
	w/Tailgate, Sub., SD1, SD2		1	---- ---	2258 198	
8-15-53	WIRING, Dome Lamp, Sp. 4 D., SY1	8	1	---- ---	---- ---	2198 871

★ Indicates use as required. Numerals in parentheses ( ) refer to notes. Printed in U.S.A.
⊟ Indicates parts not listed in any previous parts book. Prices and specifications subject to change without notice.
* Indicates change or addition. March 8, 1963 Supersedes May 1, 1962.

MyMopar.com

8-16-0 CABLE AND CONNECTIONS

NOTE: For a more practical and economical method of servicing, only the more complicated Assemblies will be stocked for service. These will be found in their respective groups. On the more simple Assemblies the required length and size of Cable, necessary Terminals, etc., should be specified. For visual chart of Insulator and Terminal Packages see front of group.

CODE	PART NAME AND DESCRIPTION	CYL.	PER CAR	VALIANT LANCER	PLYMOUTH DODGE	CHRYSLER IMPERIAL
8-16-1	CONNECTOR and TERMINAL PACKAGE, Headlamp Cable		★	1879 609	1879 609	1879 609
	Terminal and Insulator Package, 6 Pole Disconnect Male		★	1843 222	1843 222	1843 222
	Single Pole, Long		★	1843 226	1843 226	1843 226
	Single Pole, Short		★	1843 227	1843 227	1843 227
	Female, Miniature		★	2084 421	2084 421	2084 421
	8 Pole Male		★	2084 425	2084 425	2084 425
	8 Pole Female		★	2084 424	2084 424	2084 424
	Female, Miniature		★	2240 264	2240 264	2240 264
	Male, Miniature		★	2240 536	2240 536	2240 536
	Male and Female		★	2298 882	2298 882	2298 882
8-16-3	CABLE, No. 8 Brown, 100 Foot Spool		★	*2275 220	*2275 220	*2275 220
	No. 12 Red, 100 Foot Spool		★	*1752 491	*1752 491	*1752 491
	No. 14 Green, 100 Foot Spool		★	*1752 490	*1752 490	*1752 490
	No. 16 Blue, 100 Foot Spool		★	*1752 489	*1752 489	*1752 489
	No. 18 Yellow, 100 Foot Spool		★	*1752 488	*1752 488	*1752 488
	Horn Cable, No. 16 Black, 100 Foot Spool		★	*1064 754	*1064 754	*1064 754
	Wire and Spool, Triple Conductor, No. 14 Gauge, Red, Green and Black, 100 Foot Spool		★	*2298 769	*2298 769	*2298 769
	Wire and Spool, Double Conductor, No. 14 Gauge, Green and Black, 100 Foot Spool		★	*2298 770	*2298 770	*2298 770
	Wire and Spool, Double Conductor, No. 14 Gauge, Red and Black, 100 Foot Spool		★	*2298 768	*2298 768	*2298 768
8-16-4	TERMINAL, Female, Side Type		★	1842 009	1842 009	1842 009
	Male Blade Crimped, K-Type		★	1753 534	1753 534	1753 534
	Cable Connector		★	870 821	870 821	870 821
	Electrical Window Lift Safety Switch Wiring		★	903 895	903 895	903 895
	Wiring, .910" long		★	2258 591	2258 591	2258 591
	Printed Circuit Wiring, Female		★	2258 118	2258 118	2258 118
	Male Blade, K-Type		★	1769 280	1769 280	1769 280
	Female Hair Pin Wiring		★	1779 654	1779 654	1779 654
	Wiring Fuse Clip		★	2290 207	2290 207	2290 207
	Wiring, 1.36" long		★	2258 590	2258 590	2258 590
	Wiring, 1.025" long		★	2290 069	2290 069	2290 069
	Female, K-Type		★	1819 836	1819 836	1819 836
	Male Blade		★	*1770 660	*1770 660	*1770 660
	Blade Type		★	*1798 521	*1798 521	*1798 521
8-16-5	SLEEVE, Wiring Terminal, Black		★	1264 933	1264 933	1264 933
	Starting Motor Terminal		1	---- ---	930 304	
	Battery to Starter Relay to Starter Cable Terminal, SD3		1	---- ---	* 930 304	* 930 304
8-16-6	INSULATOR, Alternator Battery Terminal		1	*2291 093	*2291 093	*2291 093
	Headlamp Switch, 7 Pole Female		★	2258 102	2258 102	2258 102
	Printed Circuit Wiring Terminal		★	2258 651	2258 651	2258 651
	Terminal Block		★	*2291 663	*2291 663	*2291 663
8-16-8	CONNECTOR, 2 Way Polarized, Female		★	1842 003	1842 003	1842 003
	Single Cable		★	611 898	611 898	611 898
8-16-10	PLUG, Cable Connector, No. 12 Cable		★	665 151	665 151	665 151

MyMopar.com

8-17-0 FUSES

CODE	FUSES	AMP.	SIZE	PART NO.
8-17-2	All Models	3	5/8	150 836
	All Models	20	1-1/4	106 653
	All Models	30	1-1/4	120 114
	All Models	15	1-1/4	120 151
	All Models	5	5/8	126 049
	All Models	9	7/8	147 684
	All Models	14	1-1/16	147 685
	All Models	30	1-7/16	147 686
	All Models	1	5/8	149 559
	All Models	6	3/4	147 683
	All Models	10	1-1/4	117 142
	All Models	60	43/50	2258 284
	All Models	7-1/2	7/8	150 866
	All Models	4	5/8	147 682
	All Models	3		445 635
	All Models	2	5/8	148 086
	All Models	10	5/8	142 864
	All Models	20		106 650

CODE	PART NAME AND DESCRIPTION	CYL.	PER CAR	VALIANT LANCER	PLYMOUTH DODGE	CHRYSLER IMPERIAL
8-19-0	**INSTRUMENT PANEL WIRING**					
8-19-2	CONTACT, Ash Receiver Lamp		★	*2256 966	*2256 966	*2256 966
8-19-3	WIRING, Instrument Panel	6	1	2258 301		
	SP1, SP2, SC1, SC2, SC3		1	---- ---	*2258 033	*2258 897
	SD1, SD2, SY1		1	---- ---	*2258 126	*2257 979
	SD3	8	1	---- ---	2426 145	
	Temperature and Fuel Gauge Feed Cable, SD1, SD2		1	---- ---	1887 103	
8-19-15	BOARD, Printed Circuit, SP1, SP2		1	2258 332	2258 427	
8-19-16	CABLE, Printed Circuit Ground, SP1, SP2		1	---- ---	⊟2426 995	
8-19-39	TERMINAL, Temperature Gauge Wiring	6	1	1770 660		
	No. 1 Post, SY1	8	1	---- ---	---- ---	1770 660
8-19-83	SOCKET, HOUSING and CABLE, Ash Receiver Lamp, SC1, SC2, SC3	8	1	---- ---	---- ---	1887 726
	SY1	8	1	---- ---	---- ---	2258 297
8-19-87	CONNECTOR, w/CLIP and GASKET, Bulkhead		1	2258 497	2258 497	2258 497
8-20-0	**CIGAR LIGHTER**					
8-20-3	FUSE, Rear Console Cigar Lighter Heat Limiter, SP2-P, SD2-P, SC2	8	1	---- ---	1887 222	1887 222
8-20-4	FUSE and FUSE HOLDER, Console Cigar Lighter Feed Cable, SD2-P	8	1	---- ---	1971 742	
	Cigar Lighter, SC2	8	1	---- ---	---- ---	1885 608

★ Indicates use as required. Numerals in parentheses ( ) refer to notes. Printed in U.S.A.
⊟ Indicates parts not listed in any previous parts book. Prices and specifications subject to change without notice.
* Indicates change or addition. March 8, 1963 Supersedes May 1, 1962.

MyMopar.com

CODE	PART NAME AND DESCRIPTION	CYL.	PER CAR	VALIANT LANCER	PLYMOUTH DODGE	CHRYSLER IMPERIAL
8-20-0	**CIGAR LIGHTER - Cont'd**					
8-20-8	KNOB, Instrument Panel Cigar Lighter, SP1, SP2, SD1, SD2		1	2076 474	2290 188	2290 188
	SD3	8	1	---- ---	2257 480	
	Rear Console, SP2-P, SD2-P, SC2	8	1	---- ---	2290 188	2290 188
	Front Seat Back, SC3	8	1	---- ---	---- ---	2290 188
	Rear Quarter Arm Rest, Cv. Cp. and Sp. Cl. Cp., SY1	8	2	---- ---	---- ---	2290 188
	Rear Door Arm Rest Cigar Lighter, Sp. 4 D., SY1	8	2	---- ---	---- ---	2290 188
8-20-9	ELEMENT, Instrument Panel Cigar Lighter Heat		1	1692 678	1692 678	1692 678
	Rear Console, SP2-P, SD2-P, SC2	8	1	---- ---	1692 678	1692 678
	Front Seat Back Cigar Lighter Heat, SC3	8	1	---- ---	---- ---	1692 678
	Rear Door Arm Rest Cigar Lighter Heat, Sp. 4 D., SY1	8	2	---- ---	---- ---	1692 678
	Rear Quarter Panel Arm Rest Cigar Lighter Heat, Cv. Cp., and Sp. Cl. Cp., SY1	8	2	---- ---	---- ---	1692 678
8-20-10	SHELL and CLAMP, Instrument Panel Cigar Lighter		1	2096 599	2096 599	2096 599
	Console, SP2-P, SD2-P, SC2	8	1	---- ---	2198 192	2198 192
	Front Seat Back Cigar Lighter, SC3	8	1	---- ---	---- ---	2096 599
	Rear Quarter Panel Arm Rest Cigar Lighter, Cv. Cp. and Sp. 4 D., SY1	8	2	---- ---	---- ---	2096 599
	Rear Door Arm Rest Cigar Lighter, Sp. 4 D., SY1	8	2	---- ---	---- ---	2096 599
8-20-16	BEZEL, Instrument Panel Cigar Lighter, SD3	8	1	---- ---	1887 787	
8-21-0	**TERMINAL BLOCK**					
8-21-1	BLOCK, Instrument Panel Terminal, SD3	8	1	---- ---	1885 637	

8-27-0 IGNITION DISTRIBUTOR

NOTE: Use Part No. Stamped on Distributor for Complete Replacement and Ordering Component Parts.

8-27-1	DISTRIBUTOR ASSEMBLIES, Chrysler Built, w/170 cu. in. Eng., w/Std. Trans.	6	1	2095 974		
	Chrysler Built, w/170 cu. in. Eng., w/Auto. Trans.	6	1	2098 533	---- ---	---- ---
	Chrysler Built, w/225 cu. in. Eng.	6	1	2095 976	2095 976	
	Chrysler Built, w/Std. Trans., w/318 cu. in. Eng.	8	1	---- ---	2095 983	
	Chrysler Built, w/Auto. Trans., w/318 cu. in. Eng.	8	1	---- ---	2095 979	
	Chrysler Built, One 4 Barrel Carburetor, w/318 cubic in. Eng.	8	1	---- ---	2095 981	
	Double Breaker, One 4 Barrel, SP2 Golden Commando, SP2 Police w/High Performance, SD2-D500, SD2 Police w/High Performance, SC1 Police w/High Performance, SC2 Police w/High Performance	8	1	---- ---	2095 832	2095 832
	Double Breaker, Two-4 Barrel Carburetor, w/413 cu. in. Eng., SP2, SD2	8	1	---- ---	⊟2098 725	
	Chrysler Built, Single Breaker, One 2 Barrel, SD3, SC2 w/o High Performance	8	1	---- ---	2095 836	2095 836
	Double Breaker, Two-4 Barrel, SC2-300H w/High Performance	8	1	---- ---	---- ---	2098 495
	Chrysler Built, Single Breaker, One 4 Barrel, SC2 Power Pack, SC3, SY1	8	1	---- ---	---- ---	2095 987
8-27-61	CAP, ROTOR and CABLE PACKAGE, Distributor	6	1	⊟2448 273	⊟2448 273	
8-27-259	SPACER, Distributor Cam		1	1889 996	1889 996	1889 996
8-27-296	WICK, Distributor Cam Sleeve		1	643 899	643 899	643 899
8-27-320	TUBE, Carburetor to Distributor Vacuum Control		1	2264 962	2264 962	2264 962

MyMopar.com

CODE	PART NAME AND DESCRIPTION	CYL.	PER CAR	VALIANT LANCER	PLYMOUTH DODGE	CHRYSLER IMPERIAL

8-27-0 IGNITION DISTRIBUTOR - Cont'd

FOR MODEL APPLICATION SEE CODE 8-27-1

CODE	REMARKS	DISTRIBUTOR ASSEMBLIES 2095 832 IBS-4006G	2095 836	2095 841 IBS-4010B	2095 974	2095 976
	DISTRIBUTOR COMPONENT PARTS					
8-27-4	GASKET, Distributor	1326 836	1326 836	1326 836	2095 630	2095 630
8-27-26	CLAMP	1947 613	1947 613	---- ---	---- ---	---- ---
8-27-27	SCREW and WASHER, Clamp	6022 185	6022 185	---- ---	---- ---	---- ---
8-27-71	CAP	2084 654	1838 514	1658 534	*2098 765	*2098 765
8-27-76	SPRING, Cap Attaching	---- ---	1838 508	---- ---	1838 508	1838 508
8-27-77	SPRING and HINGE PACKAGE, Cap Clamp	1879 606	---- ---	1879 606	---- ---	---- ---
8-27-85	CONTACT and SPRING PACKAGE, Cap Plunger	2084 655	---- ---	1879 594	---- ---	---- ---
8-27-100	OILER	953 717	---- ---	953 717		
8-27-133	BEARING and THRUST WASHER PACKAGE, Drive Shaft	1879 596	2275 229	1879 596	2275 228	2275 228
8-27-137	COLLAR and PIN PACKAGE, Drive Shaft	---- ---	2084 448	---- ---	---- ---	---- ---
8-27-138	PLATE, Breaker	2299 321	2095 922	2299 321	2095 922	2095 922
8-27-158	CONTACT SET	2299 322	2098 244	2299 322	2098 244	2098 244
8-27-190	CONDENSER	1818 757	2098 058	1818 757	2098 058	2098 058
8-27-205	LEAD, Primary	1383 958	2095 873	1383 958	2095 508	2095 508
8-27-208	BREAKER and GROUND LEAD PACKAGE	2299 320	---- ---	2299 320	---- ---	---- ---
8-27-218	TERMINAL and STUD PACKAGE	1881 751	---- ---	1881 751	---- ---	---- ---
8-27-250	SHAFT, GOVERNOR and CAM	---- ---	2098 189	---- ---	2098 173	2098 208
8-27-278	WEIGHT PACKAGE, Governor	1881 746	1881 955	1881 746	1881 945	1881 945
8-27-279	SPRING SET, Governor Weight	2275 227	2298 765	2084 866	2298 758	2298 759
8-27-292	CAM and STOP PLATE	---- ---	2098 190	---- ---	2098 175	2095 274
8-27-297	FELT DISC and SNAP RING PACKAGE, Cam Sleeve	1879 607	1879 607	1879 607	1879 607	1879 607
8-27-300	ROTOR	1658 535	1838 516	1658 535	*2098 770	*2098 770
8-27-308	CHAMBER PACKAGE, Vacuum	2084 857	---- ---	2084 868	---- ---	---- ---
	CONTROL, Vacuum	---- ---	2098 192	---- ---	2098 177	2098 209
8-27-315	PLUG and GASKET PACKAGE, Vacuum Chamber	2299 319	---- ---	2299 319	---- ---	---- ---

★ Indicates use as required. Numerals in parentheses ( ) refer to notes. Printed in U.S.A.
⊟ Indicates parts not listed in any previous parts book. Prices and specifications subject to change without notice.
* Indicates change or addition. March 8, 1963 Supersedes May 1, 1962.

MyMopar.com

8-27-0 IGNITION DISTRIBUTOR - Cont'd

FOR MODEL APPLICATION SEE CODE 8-27-1

CODE	REMARKS	DISTRIBUTOR ASSEMBLIES 2095 832 IBS-4006G	2095 836	2095 841 IBS-4010B	2095 974	2095 976
	DISTRIBUTOR COMPONENT PARTS - Cont'd					
8-27-316	SPRING and WASHER PACKAGE, Vacuum Chamber	1881 750	---- ---	1881 766	---- ---	---- ---
8-27-352	GEAR and PIN PACKAGE, Drive	---- ---	---- ---	---- ---	2084 653	2084 653

FOR MODEL APPLICATION SEE CODE 8-27-1

CODE	REMARKS	DISTRIBUTOR ASSEMBLIES 2095 979	2095 981	2095 983	2095 987
	DISTRIBUTOR COMPONENT PARTS				
8-27-4	GASKET, Distributor	1326 836	1326 836	1326 836	1326 836
8-27-26	CLAMP	*1947 612	*1947 612	*1947 612	*1947 613
8-27-27	SCREW and WASHER, Clamp	1675 958	1675 958	1675 958	*6022 185
8-27-71	CAP	1838 514	1838 514	1838 514	1838 514
8-27-76	SPRING, Cap Attaching	1838 508	1838 508	1838 508	1838 508
8-27-100	OILER	953 717	953 717	953 717	---- ---
8-27-133	BEARING and THRUST WASHER PACKAGE, Drive Shaft	2275 229	2275 229	2275 229	2275 229
8-27-137	COLLAR and PIN PACKAGE, Drive Shaft	2084 448	2084 448	2084 448	2084 448
8-27-138	PLATE, Breaker	2095 922	2095 922	2095 922	2095 922
8-27-158	CONTACT SET	2098 244	2098 244	2098 244	2098 244
8-27-190	CONDENSER	2098 058	2098 058	2098 058	2098 058
8-27-205	LEAD, Primary	2095 873	2095 873	2095 873	2095 873
8-27-250	SHAFT, GOVERNOR and CAM	1889 683	1889 684	2095 742	2095 648
8-27-278	WEIGHT PACKAGE, Governor	1881 945	1881 945	1881 945	1881 955
8-27-279	SPRING SET, Governor Weight	1881 946	1881 949	2240 747	1881 956
8-27-292	CAM and STOP PLATE	1889 320	1889 715	2095 741	1889 709
8-27-297	FELT DISC and SNAP RING PACKAGE, Cam Sleeve	1879 607	1879 607	1879 607	1879 607
8-27-300	ROTOR	1838 516	1838 516	1838 516	1838 516
8-27-308	CONTROL, Vacuum	2098 184	2098 203	2098 298	2098 197

MyMopar.com

8-27-0 IGNITION DISTRIBUTOR - Cont'd

FOR MODEL APPLICATION SEE CODE 8-27-1

CODE	REMARKS	DISTRIBUTOR ASSEMBLIES *2098 495 IBS-4011AS	2098 533	*2098 725 IBB-4202S
DISTRIBUTOR COMPONENT PARTS - Cont'd				
8-27-4	"O" RING, Distributor Mounting	1326 836	2095 630	*1326 836
8-27-11	GEAR and PIN PACKAGE, Tachometer Drive	2084 869	---- ---	---- ---
8-27-18	FOLLOWER GEAR PACKAGE, Tachometer	2084 870	---- ---	---- ---
8-27-26	CLAMP	*1947 613	---- ---	*1947 613
8-27-27	SCREW and WASHER	*6022 185	---- ---	*6022 185
8-27-71	CAP	2084 654	*2098 765	*2084 654
8-27-76	SPRING, Cap Attaching	---- ---	1838 508	---- ---
8-27-77	SPRING and HINGE PACKAGE, Cap Clamp	1879 606	---- ---	*2084 303
8-27-85	CONTACT and SPRING PACKAGE, Cap Plunger	2084 655	---- ---	*2084 655
8-27-100	CUP, Grease	1879 391	---- ---	* 953 717
8-27-114	BEARING, Ball	623 207	---- ---	---- ---
8-27-133	BEARING and THRUST WASHER PACKAGE, Drive Shaft	2084 867	2275 228	*1879 596
8-27-138	PLATE, Breaker	2299 321	2095 922	*2421 848
8-27-158	CONTACT SET	2421 174	2098 244	*2421 849
8-27-190	CONDENSER PACKAGE	1818 757	2098 058	*1818 757
8-27-205	LEAD, Primary	1383 958	2095 508	*2448 252
8-27-208	BREAKER and GROUND LEAD PACKAGE	2299 320	---- ---	---- ---
8-27-218	TERMINAL and STUD PACKAGE	1881 751	---- ---	---- ---
8-27-250	SHAFT, GOVERNOR and CAM	---- ---	2098 519	---- ---
	SHAFT, Drive	---- ---	---- ---	*2448 251
8-27-278	WEIGHT PACKAGE, Governor	1881 746	1881 945	*1881 746
8-27-279	SPRING SET, Governor Weight	2084 866	2421 473	*2448 250
8-27-292	CAM and STOP PLATE	---- ---	2098 175	*2448 805
8-27-297	FELT DISC and SNAP RING PACKAGE, Cam Sleeve	1879 607	1879 607	*1879 607
8-27-300	ROTOR	1658 535	*2098 770	*1658 535
8-27-308	VACUUM CHAMBER PACKAGE	2084 868	---- ---	---- ---
	CONTROL, Vacuum	---- ---	2098 177	---- ---
8-27-315	PLUG and GASKET PACKAGE, Vacuum Chamber	2299 319	---- ---	---- ---
8-27-316	SPRING and WASHER PACKAGE, Vacuum Chamber	1881 766	---- ---	---- ---
8-27-352	GEAR and PIN PACKAGE, Drive	---- ---	2084 653	---- ---

★ Indicates use as required. Numerals in parentheses ( ) refer to notes. Printed in U.S.A.
⊟ Indicates parts not listed in any previous parts book. Prices and specifications subject to change without notice.
* Indicates change or addition. March 8, 1963 Supersedes May 1, 1962.

MyMopar.com

CODE	PART NAME AND DESCRIPTION	CYL.	PER CAR	VALIANT LANCER	PLYMOUTH DODGE	CHRYSLER IMPERIAL

8-28-0 GENERATOR OR ALTERNATOR

NOTE: For Component Parts of Generators or Alternators see Part Type Code 8-29-0. Where Component Parts of a listed Generator or Alternator are not shown please order by description. Production Assemblies are for Identification purposes only. Order Service Generators or Alternators.

NOTE: Higher Ampere Leece-Neville Alternators and Alternator Regulators are used on some 1962 Vehicles. Mopar Parts Plants do not stock Complete Replacement Assemblies or Repair Parts for Leece-Neville Units. When Complete Alternator or Alternator Regulator Assemblies or Repair Parts are required, they should be ordered by Description Direct from the nearest Leece-Neville distributor or Leece-Neville, 1374 E. 51st Street, Cleveland 3, Ohio. Attaching Parts such as Brackets, Straps and Belts are available through your usual MoPar Parts Source.

NOTE: Part Numbers 2098 265, 2098 275 and 2098 320 were manufactured with 2 types of Alternators which are interchangeable as assemblies. Certain internal components are not interchangeable, therefore when specifying components for the above Alternators, w/PULLEY it is necessary to first identify the Alternators by the number stamped on same which are shown in the above column as Identification No. stamped on Alternator.

NOTE: Alternator 2098 265 includes No. 2095 430 Single Groove Pulley. If Double Groove Pulley is required change Pulley to No. 2095 662.

NOTE: Alternator 2098 320 includes No. 2095 059 Double Groove Pulley. When using on cars equipped with Single Groove Pulley it is not necessary to change Pulley to Single Groove.

IMPORTANT: When specifying Alternators or Components See Note:

CODE	REMARKS	Alternator w/Pulley	Amps		Pulley No.	Indentification No. Stamped on Alternator
8-28-3	SL1, SV1	*2098 275	30	S	*2095 430	2098 270 or 2098 530
	SP1, SP2, SD1, SD2, SD3, SC1, SC2, SC3, SY1	*2098 265	35	S	*2095 430	2098 260 or 2098 525
	SV1, SL1, SP1, SP2, SD1, SD2, SD3, SC1, SC2, SC3, Heavy Duty, Police and Taxi	*2098 850	40	S	*2095 430	2095 300 or 2098 535
	SP2, SD2, w/361 and 383 cu. in. Eng., SD3, SC1, SC2, SC3, SY1, w/Air Conditioning, w/3" Pulley	*2098 850	40	D	*2095 059	2095 300 or 2098 535
	SP2, SD2, w/413 cu.in.Eng., w/3-1/2" Pulley	*2098 265	35	D	*2095 662	2098 260 or 2098 525

NOTE: Letters "S" and "D" in Pulley Margin Represent Single Groove and Double Groove.

CODE	PART NAME AND DESCRIPTION	CYL.	PER CAR	VALIANT LANCER	PLYMOUTH DODGE	CHRYSLER IMPERIAL
8-28-14	SPACER, Alternator Adjusting Strap, to Water Pump Housing, High Performance, w/o Air Conditioning	8	1	---- ---	2206 450	2206 450
8-28-15	STRAP, Alternator Adjusting	6	1	2202 767	2202 767	
	w/o High Performance	8	1	---- ---	2202 942	
	w/o High Performance, w/o Air Conditioning, used w/Leece-Neville Alternator	8	1	---- ---	2264 518	
	w/413 cu. in. Eng., SP2, SD2	8	1	---- ---	⊟2402 297	
	w/High Performance, w/o Air Conditioning, SP2, SD2	8	1	---- ---	*2206 446	
	w/High Performance, w/Air Conditioning	8	1	---- ---	2129 060	

★ Indicates use as required. Numerals in parentheses ( ) refer to notes. Printed in U.S.A.
⊟ Indicates parts not listed in any previous parts book. Prices and specifications subject to change without notice.
March 8, 1963 Supersedes May 1, 1962. * Indicates change or addition.

MyMopar.com

CODE	PART NAME AND DESCRIPTION	CYL.	PER CAR	VALIANT LANCER	PLYMOUTH DODGE	CHRYSLER IMPERIAL
8-28-0	**GENERATOR OR ALTERNATOR - Cont'd**					
8-28-15	STRAP - Cont'd					
	w/High Performance, w/o Air Conditioning, used w/Leece-Neville Alternator	8	1	---- ---	2206 348	
	w/Air Conditioning, Field Installation, Model G, SP2 except 318 cubic in. Eng., SD2 except 318 cubic in. Eng.	8	1	---- ---	1999 184	1999 184
	w/o Air Conditioning, w/Leece-Neville Alternator, SC1, SC2	8	1	---- ---	---- ---	2206 348
	w/o Air Conditioning, SD3, SC1, SC2	8	1	---- ---	2206 446	2206 446
	w/Air Conditioning, SD3	8	1	---- ---	2129 060	2129 060
	w/o Air Conditioning, SC2 High Performance and w/Power Pack, SC3, SY1	8	1	---- ---	---- ---	2206 447
8-28-36	BRACKET, Alternator and Coil Mounting	6	1	2264 880	2264 880	
	w/Leece-Neville Alternator, w/Dual Belt	6	1	2264 459	2264 459	
	w/o High Performance	8	1	---- ---	2202 940	
	w/o High Performance, w/o Air Conditioning, w/Leece-Neville Alternator	8	1	---- ---	2264 523	
	w/High Performance, w/o Air Conditioning SP2, SD2	8	1	---- ---	2206 445	
	w/High Performance, w/Air Conditioning	8	1	---- ---	2129 154	
	Front, w/High Performance, w/o Air Conditioning, w/Leece-Neville Alternator	8	1	---- ---	2206 346	
	w/Spring Anchor, High Performance, w/o Air Conditioning, w/Leece-Neville Alternator	8	1	---- ---	2206 347	
	w/Air Conditioning, Field Installation, Model G, SP2 except 318 cubic in. Eng., SD2 except 318 cubic in. Eng.	8	1	---- ---	2129 156	2129 156
	Front, w/o Air Conditioning, w/Leece-Neville Alternator, SC1, SC2	8	1	---- ---	---- ---	2206 346
	w/Spring Anchor, w/o Air Conditioning, w/Leece-Neville Alternator, SC1, SC2	8	1	---- ---	---- ---	2206 347
	w/o Air Conditioning, SD3	8	1	---- ---	2206 445	2206 445
	w/Air Conditioning, SD3	8	1	---- ---	2129 154	2129 154
8-28-74	REGULATOR, Alternator Voltage		1	2098 300	2098 300	2098 300
8-28-88	SCREW and CLAMP, Alternator Regulator Terminal, w/Leece-Neville Alternator, SC1		4	1779 986	1779 986	1779 986
8-28-292	SPACER, Alternator to Cylinder Head, w/o Air Conditioning, SP2 High Performance, SD2 High Performance, SD3	8	1	---- ---	2206 448	2206 448
	SPACER, Alternator, w/o Air Conditioning, SP2 High Performance, SD2 High Performance, SD3	8	1	---- ---	2206 449	2206 449

8-29-0 GENERATOR OR ALTERNATOR COMPONENT PARTS

FOR MODEL APPLICATION SEE CODE 8-28-3

CODE	REMARKS			
	Service Alternators, w/PULLEY	*2098 265	*2098 275	*2098 850
	Identification number on Alternator	*2098 260 or *2098 525	*2098 270 or *2098 530	*2095 300 or *2098 535
	ALTERNATOR COMPONENT PARTS			
8-29-17	BRUSH, WASHER and TERMINAL PACKAGE	*2084 673	*2084 673	*2084 673
8-29-42	HOLDER, Brush	*2095 038	*2095 038	*2095 038

★ Indicates use as required. Numerals in parentheses ( ) refer to notes. Printed in U.S.A.
⊟ Indicates parts not listed in any previous parts book. Prices and specifications subject to change without notice.
* Indicates change or addition. March 8, 1963 Supersedes May 1, 1962.

MyMopar.com

8-29-0 GENERATOR OR ALTERNATOR COMPONENT PARTS - Cont'd

FOR MODEL APPLICATION SEE CODE 8-28-3

CODE	REMARKS			
	Service Alternator, w/PULLEY Identification Number on Alternator	*2098 265 *2098 260 or *2098 525	*2098 275 *2098 270 or *2098 530	*2098 850 *2095 300 or *2098 535
	ALTERNATOR COMPONENT PARTS - Cont'd			
8-29-97	ROTOR (use w/Alternators identified as 2098 260, 2098 270 and 2095 300)	*2098 231	*2098 232	*2095 013
	ROTOR (use w/Alternators identified as 2098 525, 2098 530 and 2098 535)	*2098 511	*2098 516	*2098 511
8-29-98	STATOR	*2095 427	*2095 427	*2095 427
8-29-99	SLIP RING, for use w/Knurled Shaft (use w/Alternator identified as 2098 260, 2098 270 and 2095 300)	*2098 278	*2098 278	*2098 278
	SLIP RING, for use w/Ground Shaft (use w/Alternator identified as 2098 260, 2098 270 and 2095 300)	---- ---	---- ---	*2098 279
	RETAINER, WASHER and SLIP RING PACKAGE, Rotor Grease (use w/Alternator identified as 2098 525, 2098 530 and 2098 535)	*2421 804	*2421 804	*2421 804
8-29-129	CAPACITOR and INSULATOR PACKAGE	*2421 137	*2421 137	*2421 137
8-29-130	SCREW, Capacitor Ground	*6022 381	*6022 381	*6022 381
8-29-131	RECTIFIER, Positive	*2098 288	*2098 288	*2098 288
	RECTIFIER, Negative	*2098 287	*2098 287	*2098 287
8-29-132	SHIELD, Rectifier End (use w/Alternator identified as 2098 260, 2098 270 and 2095 300)	*2095 339	*2095 339	*2095 339
	SHIELD, Rectifier End (use w/Alternator identified as 2098 525, 2098 530 and 2098 535)	*2098 646	*2098 646	*2098 646
8-29-133	BEARING, Rectifier End Shield (use w/Alternator identified as 2098 260, 2098 270 and 2095 300)	*2095 037	*2095 037	*2095 037
	BEARING, Rectifier End Shield (use w/Alternator identified as 2098 525, 2098 530 and 2098 535)	*2098 512	*2098 512	*2098 512
8-29-134	INSERT, Rectifier End Mounting	*2095 052	*2095 052	*2095 052
8-29-135	HEAT SINK, Rectifier	*2095 925	*2095 925	*2095 925
8-29-143	CEMENT, Lead Wire, 5 oz. Tube (use w/Alternator identified as 2098 260, 2098 270 and 2095 300)	*2299 314	*2299 314	*2299 314
8-29-145	SPACER PACKAGE, Heat Sink	*2421 138	*2421 138	*2421 138
8-29-153	SHIELD, Drive End	*2095 945	*2095 945	*2095 945
8-29-154	BEARING, Drive End Shield	*2098 478	*2098 478	*2098 478
8-29-155	PLATE, Drive End Bearing Retainer	*2095 012	*2095 012	*2095 012
8-29-194	SCREW, Field Terminal Mounting	*6023 112	*6023 112	*6023 112
8-29-208	SCREW, Frame	*2095 004	*2095 004	*2095 004

MyMopar.com

CODE	PART NAME AND DESCRIPTION	CYL.	PER CAR	VALIANT LANCER	PLYMOUTH DODGE	CHRYSLER IMPERIAL
8-30-0	**GROMMETS**					
8-30-1	GROMMET, Headlamp Wiring, SV1	6	2	2257 299		
	Headlamp Wiring, SL1	6	2	2097 303		
	Wiring Dash Slot, 3/4" thk.		★	2097 814	2097 814	2097 814
	Speedometer Cable, 3/8" thk.		★	2097 816	2097 816	2097 816
	Dummy, 3/4" Dash-Slot		★	1971 740	1971 740	1971 740
	Main, Dash, w/o Slot, one Channel		★	1971 732	1971 732	1971 732
	Main, Dash, w/Slot, one Channel		★	1971 731	1971 731	1971 731
	Main, Dash, w/Slot, three Channels		★	1971 733	1971 733	1971 733
8-31-0	**PARKING BRAKE SIGNAL LAMP**					
8-31-2	LAMP, Parking Brake Indicator, SP1, SP2, SD1, SD2		1	2298 767	2298 767	
	SD3	8	1	---- ---	2096 526	
8-31-3	FLASHER, Parking Brake Indicator Lamp, SY1	8	1	---- ---	---- ---	1971 896
8-31-10	SWITCH, Parking Brake Indicator Lamp, SP1, SP2, SD1, SD2, SY1		1	2097 279	2097 279	2097 279
	SD3, SC1, SC2, SC3	8	1	---- ---	1971 931	1971 931
8-31-11	BRACKET, Parking Brake Indicator Lamp Switch, SD3, SC1, SC2, SC3	8	1	---- ---	2096 396	2096 396
8-31-16	SOCKET, Parking Brake Indicator Lamp, SD3		1	1314 619	1753 632	1753 632
	w/HOUSING, SD1, SD2		1	---- ---	1880 587	
8-31-18	CONTACT, Parking Brake Indicator Lamp Socket		★	*2256 966	*2256 966	*2256 966
8-32-0	**HORN**					
8-32-2	HORN, w/Mounting BRACKET, Right	6	1	2298 792		
	Left, w/Mounting BRACKET	6	1	2298 791		
	Upper, w/Mounting BRACKET, SP1, SP2, SD1, SD2.		1	---- ---	2298 793	
	Lower, w/Mounting BRACKET, SP1, SP2, SD1, SD2.		1	---- ---	2298 794	
	Right, Auto-Lite, SD3, SC1, SC2	8	1	---- ---	2291 424	2291 424
	Left, Auto-Lite, SD3, SC1, SC2	8	1	---- ---	2291 423	2291 423
	Right, w/Mounting BRACKET, Sparton, SC3, SY1	8	1	---- ---	---- ---	2291 420
	Left, w/Mounting BRACKET, Sparton, SC3, SY1	8	1	---- ---	---- ---	2291 419
8-32-15	BRACKET, Horn Mounting, Auto-Lite, SP1, SP2, SD1, SD2, SC1, SC2		2	2291 118	2258 517	2197 876
	Auto-Lite, SD3, SC3	8	2	---- ---	2197 876	2197 871
8-32-18	SCREW, Horn and Bracket Mounting	6	★	6023 253		
	Radiator Side Yoke		2	---- ---	6023 253	
	Horn Bracket to Horn Mounting, SC1, SC2, SC3		★	2290 623	2290 623	2290 623
	Mounting to Yoke, SD3, SC1, SC2	8	2	---- ---	6023 253	6023 253
	Mounting to Radiator Cross Bar, SC3	8	2	---- ---	---- ---	6023 253
	Mounting to Radiator Cross Bar, SY1	8	2	---- ---	---- ---	6022 802
8-33-0	**HORN CONTROLS**					
8-33-4	RING, Steering Wheel Horn, SP1-L 4 D., SP1-H-M, SP2-L 4 D., SP2-M-H-P, SD1-H-M, SD2-H-M, SY1		1	*2265 517	*2204 104	*2200 585
	Police Car, SC1		1	---- ---	1738 214	1738 214
	w/ORNAMENT, w/Plastic Wheel, SP1, SP2		1	---- ---	2266 222	
	w/ORNAMENT, w/Plastic Wheel, SD1, SD2 except SD2-P		1	---- ---	2260 983	
	w/ORNAMENT, w/Plastic Wheel, SD2-P	8	1	---- ---	2266 720	
	w/Rubber Wheel, SD3, SC1, SC2	8	1	---- ---	2200 706	1945 920
	w/Plastic Wheel, SC1, SC2, SC3	8	1	---- ---	---- ---	2265 332

★ Indicates use as required. Numerals in parentheses ( ) refer to notes. Printed in U.S.A.
B Indicates parts not listed in any previous parts book. Prices and specifications subject to change without notice.
* Indicates change or addition.

March 8, 1963 Supersedes May 1, 1962.

MyMopar.com

CODE	PART NAME AND DESCRIPTION	CYL.	PER CAR	VALIANT LANCER	PLYMOUTH DODGE	CHRYSLER IMPERIAL
8-33-0	**HORN CONTROLS - Cont'd**					
8-33-5	RETAINER, Horn Button Ornament Cap, Paint, SP1L, SP2L, SD1L, SD2L		1	---- ---	2207 888	
	Police Car, SC1		1	---- ---	1673 967	1673 967
	Ring, w/Plastic Wheel, SP1, SP2, SD1, SD2		1	---- ---	2260 511	
	SD3	8	1	---- ---	2200 557	
8-33-6	ORNAMENT, Steering Wheel Horn, SV1	6	1	2266 209		
	SL1	6	1	2266 210		
	Complete, Chrome, w/Rubber Wheel, SP1, SP2		1	---- ---	*2207 883	
	Horn Ring, w/Plastic Wheel, SP1, SP2		1	---- ---	2266 223	
	Horn Ring, Partial, Plastic, SP1, SP2		1	---- ---	*2204 107	
	Horn Ring, Partial, Plastic, SD1, SD2 except SD2-P		1	---- ---	*2204 108	
	Complete, Chrome, w/Rubber Wheel, SD1, SD2		1	---- ---	*2207 887	
	Horn Ring, w/Plastic Wheel, SD2-P	8	1	---- ---	2266 721	
	SD3, w/o Power Steering	8	1	---- ---	2200 716	
	SD3, w/Power Steering	8	1	---- ---	2200 717	
	Horn Ring, Complete, SC1	8	1	---- ---	---- ---	2265 503
	Horn Ring, Complete, SC2	8	1	---- ---	---- ---	2265 504
	Horn Ring, Complete, SC3	8	1	---- ---	---- ---	2265 505
8-33-19	BASE, Horn Button Ornament, SV1L, SL1-L	6	1	2266 220		
	Horn Ring Mounting, SY1	8	1	---- ---	---- ---	1730 978
8-33-23	SPACER, Steering Wheel Ornament	6	1	2401 209		
8-33-39	BUSHING PACKAGE, Horn Ring Spacer		1	2240 608	2240 608	2240 608
8-33-40	SCREW, Horn Blowing Ring Spacer Bushing		★	1325 906	1325 906	1325 906
8-33-70	"O" RING, Steering Wheel Ornament Retainer	6	1	6023 346		
8-33-90	SWITCH, Horn, Complete, SV1L, SL1-L, SP1L, SP2L, SD1L, SD2L		1	2076 543	2076 543	
	w/Horn Ring, SV1H-P, SL1H-P, SC1, SC2, SC3		1	1972 391	1972 391	1972 391
	w/Horn Ring, Export, SV1-L, SL1-L	6	1	1972 391		
	SD3, SY1	8	1	---- ---	1971 940	1704 689
8-33-118	CONTACT, Turn Signal Switch Horn, SD3	8	1	---- ---	*1604 921	*1604 921
8-33-120	SLEEVE, Horn Contact and Turn Signal Cancelling Switch Actuating, SC1, SC2, SC3	8	1	---- ---	---- ---	2291 440
8-33-121	RING and FEED CABLE, Horn Contact, SY1		1	2258 723	2258 723	2197 079
	SD3, SC1 Police	8	1	---- ---	2258 588	2258 588
8-33-164	RELAY, Horn		1	2196 312	2196 312	2196 312
8-34-0	**HEADLAMP**					
8-34-1	HEADLAMP and DOOR PACKAGE, Headlamp, Right, SV1	6	1	2298 787		
	Left, SV1	6	1	2298 788		
	HEADLAMP, Left-Shift, Export, Right, SV1	6	1	2258 760		
	Left, Left-Shift, Export, SV1	6	1	2258 761		
	HEADLAMP PACKAGE, w/o Door, Right, SL1	6	1	2298 789		
	Left, SL1	6	1	2298 790		
	HEADLAMP, Left-Shift, Export, Right, SL1	6	1	2258 504		
	Left, Left-Shift, Export, SL1	6	1	2258 505		
	High-Low Beam, Riteway Shift		2	---- ---	2097 316	2097 316
	High-Low Beam, Left-Shift, Export		2	---- ---	2097 317	2097 317
	High Beam		2	---- ---	2097 319	2097 319

★ Indicates use as required. Numerals in parentheses ( ) refer to notes. Printed in U.S.A.
⊟ Indicates parts not listed in any previous parts book. Prices and specifications subject to change without notice.
March 8, 1963 Supersedes May 1, 1962. * Indicates change or addition.

MyMopar.com

CODE	PART NAME AND DESCRIPTION	CYL.	PER CAR	VALIANT LANCER	PLYMOUTH DODGE	CHRYSLER IMPERIAL
8-34-0	**HEADLAMP - Cont'd**					
8-34-40	DOOR, Headlamp, Bright Finish, Right, SV1-L-H	6	1	2195 558		
	Left, SV1-L-H	6	1	2195 559		
	Right, Black Finish, SV1-P	6	1	2082 120		
	Left, SV1-P	6	1	2082 121		
	Right, Fender Headlamp, SL1-P	6	1	2099 988		
	Left, SL1-P	6	1	2099 989		
	Right, Fender Headlamp, SL1-L-H	6	1	2242 160		
	Left, SL1-L-H	6	1	2242 161		
	Fender, SP1, SP2		2	---- ---	2099 579	
	Right, Radiator Grille, Inner, SP1, SP2		1	---- ---	2099 332	
	Left, Radiator Grille, Inner, SP1, SP2		1	---- ---	2099 333	
	Fender, SD1, SD2		2	---- ---	2099 974	
	Right, Radiator Grille, SD1, SD2		1	---- ---	2099 492	
	Left, Radiator Grille, SD1, SD2		1	---- ---	2099 493	
	Right, Radiator Grille, SD3	8	2	---- ---	*1904 844	
	Left, Radiator Grille, SD3	8	2	---- ---	*1904 845	
	Right, w/INSERT, SC1, SC2, SC3	8	1	---- ---	---- ---	2099 680
	Left, w/INSERT, SC1, SC2, SC3	8	1	---- ---	---- ---	2099 681
	Fender, SY1	8	4	---- ---	---- ---	1904 214
8-34-46	PLATE, Radiator Grille Headlamp Mounting, White, SD3	8	4	---- ---	1904 839	
8-34-62	NUT, Headlamp Door Attaching, SD1, SD2		6	---- ---	6023 478	
	Headlamp Housing Bracket to Headlamp Plate, SD3	8	4	---- ---	6022 162	
	Headlamp Door Attaching, SC1, SC2, SC3	8	8	---- ---	---- ---	6022 826
8-34-96	SCREW, Headlamp Door to Grille, SL1	6	2	6023 625		
	Headlamp Door to Grille and Radiator Yoke Upper Panel, SL1	6	2	6022 951		
	Headlamp Door to Headlamp Shell, SL1	6	4	* 179 355		
	T/SCREW, Headlamp Door, SV1	6	6	274 108		
	SCREW, Bezel to Fender, SP1, SP2		8	---- ---	6023 077	
	Headlamp Door Attaching, SD1, SD2, SC1, SC2, SC3		4	---- ---	6022 893	9415 558
	Headlamp Door Attaching Lower, SD1, SD2		2	---- ---	6024 094	
	Headlamp Housing to Bracket, SD3	8	2	---- ---	6022 307	
	Headlamp Door Attaching, SD3	8	6	---- ---	6022 159	
	Headlamp Housing to Headlamp Mounting Plate, SD3	8	12	---- ---	6022 802	
	Headlamp Door Attaching, SC1, SC2, SC3	8	4	---- ---	---- ---	9414 327
	Headlamp Door Attaching, SY1	8	12	---- ---	---- ---	6010 061
	Headlamp Mounting Reinforcement to Fender to Yoke Lower Shield, SY1	8	4	---- ---	---- ---	6022 506
	Headlamp Mounting Reinforcement to Fender Side Panel to Shear Panel Reinforcement, SY1	8	4	---- ---	---- ---	6022 506
	Headlamp Housing to Fender Stabilizer Attaching, SY1	8	2	---- ---	---- ---	6022 506
	Headlamp Housing Stabilizer Reinforcement to Fender to Yoke Lower Shield, SY1	8	4	---- ---	---- ---	6022 506
	Headlamp Housing Stabilizer Reinforcement to Fender Side Panel to Shear Panel Reinforcement, SY1	8	4	---- ---	---- ---	6022 506
8-34-175	BULB, Headlamp Sealed Beam, High Beam		2	1753 435	1753 435	1753 435
	High-Low Beam, Left-Shift, Export		2	1841 775	1841 775	1841 775
	High-Low Beam, Riteway-Shift		2	1753 436	1753 436	1753 436

★ Indicates use as required. Numerals in parentheses ( ) refer to notes. Printed in U.S.A.
⊟ Indicates parts not listed in any previous parts book. Prices and specifications subject to change without notice.
* Indicates change or addition.

March 8, 1963 Supersedes May 1, 1962.

MyMopar.com

CODE	PART NAME AND DESCRIPTION	CYL.	PER CAR	VALIANT LANCER	PLYMOUTH DODGE	CHRYSLER IMPERIAL
8-34-0	**HEADLAMP - Cont'd**					
8-34-177	SPRING, Headlamp Bulb Mounting Seat Adjusting .		4	2076 305	1972 972	1972 972
8-34-178	SCREW, Headlamp Bulb Mounting Seat Adjusting . .		8	1658 660	2197 327	2197 327
8-34-180	RING, Headlamp Bulb Retaining		4	2076 306	1779 406	1779 406
8-34-300	REINFORCEMENT, Headlamp Mounting, White,					
	Right, SY1	8	1	---- ---	---- ---	1904 286
	Left, White, SY1	8	1	---- ---	---- ---	1904 287
8-34-302	BRACKET, Headlamp Housing to Headlamp					
	Plate, White, Right, SD3	8	1	---- ---	1904 870	
	Left, SD3	8	1	---- ---	1904 871	
8-34-362	HOUSING and SUPPORT, Headlamp Inner, White,					
	SP1, SP2		2	---- ---	2099 798	
	HOUSING, Support and Reinforcement, Headlamp,					
	Inner, White, SP1, SP2		2	---- ---	2276 772	
	HOUSING, Bracket and Reinforcement, Grille					
	Headlamp, White, Right, SD1, SD2		1	---- ---	2276 778	
	Left, White, SD1, SD2		1	---- ---	2276 779	
	HOUSING, Radiator Grille Headlamp, Right, SD3 .	8	1	---- ---	1904 910	
	Left, SD3	8	1	---- ---	1904 911	
	HOUSING, Outboard, Right, SY1	8	1	---- ---	---- ---	1904 208
	Left, SY1	8	1	---- ---	---- ---	1904 209
	HOUSING, Inboard, Right, SY1	8	1	---- ---	---- ---	1904 212
	Left, SY1	8	1	---- ---	---- ---	1904 213
8-34-371	STABILIZER, Headlamp Housing to Fender, Right,					
	SY1	8	1	---- ---	---- ---	1904 216
	Left, SY1	8	1	---- ---	---- ---	1904 217
8-34-372	GASKET, Headlamp Housing Stabilizer, SY1	8	2	---- ---	---- ---	1904 220
	Housing Base, SY1	8	4	---- ---	---- ---	1904 218
8-34-374	REINFORCEMENT, Headlamp Housing Stabilizer,					
	White, Right, SY1	8	1	---- ---	---- ---	1904 282
	Left, White, SY1	8	1	---- ---	---- ---	1904 283
8-35-0	**IGNITION COIL, SWITCH AND LOCK CYLINDER**					
8-35-4	COIL, Ignition		1	2084 847	2084 847	2084 847
8-35-22	RESISTOR, Ignition Coil Primary		1	*2275 590	*2275 590	*2275 590
8-35-41	BRACKET, Ignition Coil Mounting, used					
	w/Leece-Neville Alternator	6	1	2203 144	2203 144	
	On Coil	6	1	1688 207	1688 207	
	w/318 cu. in. Eng.	8	1	---- ---	2095 374	
	Except 318 cu. in. Eng.	8	1	---- ---	1688 207	1688 207
8-35-44	SPACER, Ignition and Starter Switch Mounting,					
	SD3	8	1	---- ---	2198 869	
8-35-59	SWITCH, Starter and Ignition		1	2097 628	2097 628	2097 628
8-35-85	BEZEL, Ignition and Starter Switch	6	1	2257 878		
	SP1, SP2		1	---- ---	1972 084	
	SD1, SD2		1	---- ---	2256 449	
	SD3, SC1, SC2, SC3	8	1	---- ---	2198 872	2096 317
	RING, Retainer, SY1	8	1	---- ---	---- ---	1971 873
8-35-95	RETAINER, Ignition and Starter Switch, SP1, SP2 .		1	---- ---	1972 077	

★ Indicates use as required. Numerals in parentheses ( ) refer to notes. Printed in U.S.A.
⊟ Indicates parts not listed in any previous parts book. Prices and specifications subject to change without notice.
March 8, 1963 Supersedes May 1, 1962. * Indicates change or addition.

MyMopar.com

CODE	PART NAME AND DESCRIPTION	CYL.	PER CAR	VALIANT LANCER	PLYMOUTH DODGE	CHRYSLER IMPERIAL
8-35-0	**IGNITION COIL, SWITCH AND LOCK CYLINDER - Cont'd**					
8-35-111	CYLINDER PACKAGE, Ignition and Door Lock . . .		1	2161 192	---- ---	2161 503
	Taxi		1	2162 503	2162 503	
	Except Sub.		1	---- ---	2161 192	
	Ignition, Door and Manual Tailgate Lock, Sub. . .		1	---- ---	2162 531	
	Ignition, Door and Manual Tailgate Lock, Sub., Fleet Special, SD1L, SD2L		1	---- ---	2241 871	
8-35-115	CYLINDER and KEY, Ignition Lock		1	2086 047	2086 047	2086 047
8-36-0	**IGNITION**					
8-36-1	SET, Mopar Ignition Cable, Resistor Type	6	1	2275 739	2275 438	
	SET, Mopar Ignition Cable, Resistor Type, w/High Performance, SP2, SD2	8	1	---- ---	2279 899	
	SET, Mopar, Ignition Cable, Resistor Type, w/o High Performance, SP2, SD2	8	1	---- ---	2084 219	
	SET, Mopar Ignition Cable, Resistor Type, SD3 . .	8	1	---- ---	2084 217	2084 217
	SET, Ignition Cable, Resistor Type, Stainless Steel Core, w/413 cu. in. Eng., SP2, SD2 . . .	8	1	---- ---	⊟2421 497	
	PACKAGE, Ignition Cable, Resistor Type, Stainless Steel Core, 45° Elbow, No. 3 and 5 Cable, w/413 cu. in. Eng., SP2, SD2	8	2	---- ---	⊟2421 496	
	PACKAGE, Ignition Cable, Resistor Type, Stainless Steel Core, Straight, except No. 3 and 5 Cable, w/413 cu. in. Eng., SP2, SD2	8	6	---- ---	⊟2421 495	
	PACKAGE, Mopar Ignition Cable, Resistor Type, Nos. 2, 3, 4 Cable	6	3	2084 645		
	PACKAGE, Mopar Ignition Cable, Resistor Type, Nos. 2, 3, 4, 6 Cable	6	4	---- ---	2084 645	
	PACKAGE, Mopar Ignition Cable, Resistor Type, w/o High Performance, SP2, SD2	8	8	---- ---	2084 064	
	PACKAGE, Mopar Ignition Cable, Resistor Type, w/High Performance, except No. 3 Cable, SP2, SD2	8	7	---- ---	2084 458	
	PACKAGE, Mopar Ignition Cable, Resistor Type, w/High Performance, No. 3 Cable, SP2, SD2 . .	8	1	---- ---	2084 456	
	PACKAGE, Mopar Ignition Cable, Resistor Type, No. 1 Cable, used w/Leece-Neville Alternator, SC1, SC2, SC3	8	1	---- ---	---- ---	2196 335
	PACKAGE, Mopar Ignition Cable, Resistor Type, No. 7 Cable, SC2 w/o High Performance	8	1	---- ---	---- ---	2084 064
	PACKAGE, Mopar Ignition Cable, Resistor Type, No. 7 Cable, SC2 w/High Performance	8	1	---- ---	---- ---	2196 335
	PACKAGE, Mopar Ignition Cable, Resistor Type, except No. 2 and 7 Cable, SC2	8	6	---- ---	---- ---	2084 064
	PACKAGE, Mopar Ignition Cable, Resistor Type, except No. 2 Cable, SD3, SC1, SC3, SY1	8	7	---- ---	2084 064	2084 064
	PACKAGE, Mopar Ignition Cable, Resistor Type, No. 2 Cable, SD3	8	1	---- ---	2084 065	2084 065
8-36-4	BRACKET, Spark Plug Wire, w/o High Performance, SP2, SD2	8	2	---- ---	1739 355	
	w/High Performance, Intermediate Front Right, SP2, SD2	8	1	---- ---	2268 113	
	w/High Performance, Intermediate Front Left, SP2, SD2	8	1	---- ---	2268 122	
	w/High Performance, Front, SP2, SD2	8	2	---- ---	2268 112	
	w/High Performance, Left Bank Intermediate, SP2, SD2	8	1	---- ---	2161 168	
	Right Bank, SD3	8	2	---- ---	1859 804	1859 804
	Left Bank, SD3	8	2	---- ---	1859 803	1859 803
	Intermediate, SD3	8	1	---- ---	1859 802	1859 802

★ Indicates use as required. Numerals in parentheses ( ) refer to notes. Printed in U.S.A.
⊟ Indicates parts not listed in any previous parts book. Prices and specifications subject to change without notice.
* Indicates change or addition. March 8, 1963 Supersedes May 1, 1962.

MyMopar.com

CODE	PART NAME AND DESCRIPTION	CYL.	PER CAR	VALIANT LANCER	PLYMOUTH DODGE	CHRYSLER IMPERIAL
8-36-0	**IGNITION - Cont'd**					
8-36-14	SEPARATOR, Spark Plug Cable, Right Bank, High Performance		1	1841 499	1841 499	1841 499
8-36-49	CABLE PACKAGE, Coil Secondary, w/15" Cable		1	2084 427	2084 427	2084 427
	Except 15" Cable		1	2084 428	2084 428	2084 428
	CABLE, Coil Secondary, w/413 cu. in. Eng., SP2, SD2	8	1	---- ---	⊟2098 572	
8-36-83	CABLE, Spark Plug, No. 1 and 6	6	2	*1889 917	*1889 917	
	No. 2	6	1	*2095 823	*2095 823	
	Nos. 3 and 4	6	2	*2095 277	*2095 277	
	No. 5, w/170 cu. in. Eng.	6	1	*1889 916		
	No. 5, w/225 cu. in. Eng.	6	1	*2095 823	*2095 823	
8-36-95	TERMINAL, Spark Plug Cable, Distributor End		★	1717 314	1717 314	1717 314
8-36-96	NIPPLE, Coil Secondary Cable, Coil End		1	2095 768	2095 768	2095 768
	Distributor End		1	2095 766	2095 766	2095 766
	Spark Plug		★	2095 766	2095 766	2095 766
8-36-114	PLUG, Spark, Champion N-12Y	6	6	2098 360	2098 360	
	Champion J-9Y, High Performance, Police, SC1	8	8	---- ---	2098 334	2098 334
	Champion J-9Y, High Performance, SC2	8	8	---- ---	---- ---	2098 334
	Champion J-12Y, Domestic	8	8	---- ---	1889 524	1889 524
	Champion J-18Y, Export	8	8	---- ---	1889 525	1889 525
	Champion J-2J, w/413 cu. in. Eng., SP2, SD2	8	8	---- ---	⊟2098 577	
8-36-117	COVER, Spark Plug	6	6	1889 921	1889 921	
		8	8	---- ---	1889 517	1889 517
8-36-124	SHIELD, Spark Plug Heat, High Performance, Right	8	1	---- ---	2268 647	
	Left, High Performance	8	1	---- ---	2206 006	
	SD3	8	2	---- ---	1821 394	1821 394
8-36-136	TUBE, Spark Plug	6	6	2121 245	2121 245	
8-36-137	SEAL, Spark Plug Tube	6	6	1947 708	1947 708	
8-37-0	**INSTRUMENT PANEL INSTRUMENTS**					
8-37-1	AMMETER, SL1, SD1, SD2, SY1		1	2257 921	2258 242	2197 223
	SV1, SD3, SC1, SC2, SC3		1	2256 350	2257 652	2256 203
	SP1, SP2		1	---- ---	2257 209	
	100A		1	---- ---	2290 425	
	60A, SD1, SD2		1	---- ---	2258 261	
	60A, SP1, SP2, SC1, SC2, SC3		1	---- ---	2290 329	2291 303
8-37-2	LIMITER, Voltage, SP1, SP2		1	---- ---	*2258 413	
	SD1, SD2		1	---- ---	2209 216	
8-37-10	SPACER, Ammeter Mounting	6	2	2257 930		
8-37-15	LAMP, Windshield Wiper Switch Title, SY1	8	1	---- ---	---- ---	2198 638
	Headlamp and Instrument Lamp Switch Title, SY1	8	1	---- ---	---- ---	2198 639
	Ignition Switch Title, SY1	8	1	---- ---	---- ---	2198 641
	Power Antenna Switch Title, w/o Auto. Pilot, SY1	8	1	---- ---	---- ---	2198 640
	Power Antenna Switch Title, w/Auto. Pilot, SY1	8	1	---- ---	---- ---	2257 272
8-37-16	LENS, Power Antenna Switch Title Lamp, SY1	8	1	---- ---	---- ---	2198 652
	Auto. Pilot Control Title Lamp, SY1	8	1	---- ---	---- ---	2198 652
	LENS and OVERLAY, Auto. Pilot Title Lamp, SY1	8	1	---- ---	---- ---	2257 273
	Switch Title Lamp, SY1	8	1	---- ---	---- ---	2198 652

★ Indicates use as required. Numerals in parentheses ( ) refer to notes. Printed in U.S.A.
⊟ Indicates parts not listed in any previous parts book. Prices and specifications subject to change without notice.
March 8, 1963 Supersedes May 1, 1962. * Indicates change or addition.

MyMopar.com

CODE	PART NAME AND DESCRIPTION	CYL.	PER CAR	VALIANT LANCER	PLYMOUTH DODGE	CHRYSLER IMPERIAL
8-37-0	**INSTRUMENT PANEL INSTRUMENTS - Cont'd**					
8-37-17	POWER SUPPLY, Electro Luminescent, SC1, SC2, SC3	8	1	---- ---	---- ---	2196 314
	SY1	8	1	---- ---	---- ---	2240 544
8-37-20	BEZEL, Headlamp and Instrument Lamp Switch Title Lamp Lens, SY1	8	1	---- ---	---- ---	2197 599
	Dummy Title Power Antenna Switch Title Lamp Lens, SY1	8	1	---- ---	---- ---	2197 599
	Windshield Wiper Switch Title Lamp Lens, SY1	8	1	---- ---	---- ---	2197 599
	Ignition Switch Title Lamp Lens, SY1	8	1	---- ---	---- ---	2197 600
	Auto. Pilot Control Title Lens, SY1	8	1	---- ---	---- ---	2197 600
	Windshield Wiper Title Lamp, SY1	8	1	---- ---	---- ---	1887 784
8-37-21	RETAINER, Switch Title Lamp, SY1	8	4	---- ---	---- ---	2197 449
8-37-85	LENS, Oil Indicator, SP1, SP2	8	1	---- ---	⊟2257 232	
8-37-88	SOCKET, Low Oil Pressure Indicator Lamp, SD1, SD2, SD3		1	1753 632	*1753 632	
	Oil Warning Lamp, SP1, SP2		1	---- ---	2257 440	
	Instrument Push Button Title Illuminated, SD1, SD2		2	---- ---	2097 003	
	Instrument Panel Gauge Illuminated, SD1, SD2		3	---- ---	2097 003	
8-37-90	BEZEL, Speedometer and Instrument Controls, SV1	6	1	2258 538		
	SL1	6	1	2258 543		
	Instrument Cluster, SD1, SD2		1	---- ---	2258 493	
	w/Std. Trans., SP1, SP2		1	---- ---	2257 376	
	w/Auto. Trans., SP1, SP2		1	---- ---	2257 091	
	Switch Mounting, SC1, SC2, SC3	8	1	---- ---	---- ---	1971 519
8-37-93	CONTACT, Oil Warning Lamp Socket		★	*2256 966	*2256 966	
8-37-95	HOUSING, Instrument Cluster, SD3	8	1	---- ---	2257 651	
8-37-98	MASK and SEAL, Speedometer and Instrument Cluster, SC1, SC2, SC3	8	1	---- ---	---- ---	2299 339
8-37-136	GAUGE, Temperature, SL1, SP1, SP2, SC1, SC2, SC3		1	2257 923	2257 213	2257 660
	SV1, SD1, SD2, SY1		1	2256 351	2258 241	2291 553
	SD3	8	1	---- ---	2197 060	
8-37-155	SENDING UNIT, Temperature Gauge, King-Seeley and Auto-Lite		1	2240 744	2240 744	2240 744
	Stewart Warner		1	2256 302	2256 302	2256 302
8-37-162	LENS, Instrument Cluster, w/o Clock, SD3	8	1	---- ---	2257 645	
	w/Clock, SD3	8	1	---- ---	2197 052	
8-37-177	HOUSING and LENS PACKAGE, Instrument Cluster, SC1, SC2, SC3	8	1	---- ---	---- ---	2084 072
8-37-178	HOUSING, Instrument Panel Instruments SP1, SP2, White		1	---- ---	2162 599	
	SD1, SD2, White		1	---- ---	2162 602	
	Instrument Panel Instrument Gauges, White, SD3	8	1	---- ---	2080 705	
	Instrument Panel Instrument, Upper, White, SD3	8	1	---- ---	2080 702	
	Instrument Panel Instrument, Lower, White, SD3	8	1	---- ---	2080 703	
	Lower, SY1	8	1	---- ---	---- ---	2161 573
	Upper, SY1	8	1	---- ---	---- ---	2161 650
8-37-190	PLATE, Instrument Cluster, SP1, SP2		1	---- ---	2258 053	
	SD1, SD2		1	---- ---	2258 582	

★ Indicates use as required. Numerals in parentheses ( ) refer to notes. Printed in U.S.A.
⊟ Indicates parts not listed in any previous parts book. Prices and specifications subject to change without notice.
* Indicates change or addition. March 8, 1963 Supersedes May 1, 1962.

MyMopar.com

CODE	PART NAME AND DESCRIPTION	CYL.	PER CAR	VALIANT LANCER	PLYMOUTH DODGE	CHRYSLER IMPERIAL
8-37-0	**INSTRUMENT PANEL INSTRUMENTS - Cont'd**					
8-37-200	SCREW, Speedometer and Instrument Cluster Lens Mounting, SC1, SC2, SC3	8	6	---- ---	---- ---	1972 757
	Instrument Gauge Mounting, SC1, SC2, SC3	8	8	---- ---	---- ---	1972 757
8-37-275	GAUGE, Fuel, SL1, SD3, SC1, SC2, SC3		1	2257 926	2197 059	2258 137
	SV1, SD1, SD2, SY1		1	2256 348	2258 240	2197 225
	SP1, SP2		1	---- ---	2257 205	
8-37-316	GAUGE, Oil, SC1, SC2, SC3	8	1	---- ---	---- ---	2291 302
	SY1	8	1	---- ---	---- ---	2197 222
8-37-317	SENDING UNIT, Oil Pressure	8	1	---- ---	---- ---	1972 241
8-37-371	CLUSTER, Speedometer and Instrument, Partial, Mile, SY1	8	1	---- ---	---- ---	2275 243
	Kilo, SY1	8	1	---- ---	---- ---	2275 244
8-37-372	SPEEDOMETER, Mile, SL1, SP1, SP2		1	2291 234	2257 085	
	Kilo, SL1, SP1, SP2		1	2291 235	2256 334	
	Mile, SV1, SD1, SD2, SC1, SC2, SC3		1	2291 232	2258 256	2198 694
	Kilo, SV1, SD1, SD2, SC1, SC2, SC3		1	2291 233	2258 257	2198 695
	Mile, SD3	8	1	---- ---	2097 819	
	Calibrated, SP1, SP2		1	---- ---	2290 331	
	Calibrated, SD1, SD2		1	---- ---	2258 260	
	Mile, 150, SC1, SC2 w/o High Performance, SC3		1	---- ---	2290 394	2290 394
	Mile, 150, SC2, High Performance	8	1	---- ---	---- ---	2198 696
8-37-373	HOUSING PACKAGE, Speedometer Instruments and Control	6	1	2299 316		
8-37-387	GROMMET, Speedometer Mounting Screw		2	---- ---	2209 214	
8-37-389	SCREW, Speedometer Instrument and Controls Bezel Mounting, SV1	6	4	2258 398		
	Upper, SL1	6	2	2258 398		
	Lower, SL1	6	2	9416 370		
8-37-410	LENS, Speedometer, Mile, SD3	8	1	---- ---	2097 826	
8-37-418	SCREW, Speedometer Dial Mounting, SD1, SD2		2	---- ---	2258 385	
8-37-458	CABLE, Odometer Reset, SY1	8	1	---- ---	---- ---	2197 271
8-37-459	NUT, Odometer Reset Cable Mounting to Panel, SY1	8	1	---- ---	---- ---	1886 089
8-37-504	TACHOMETER, 6000 R.P.M., SC2-300H	8	1	---- ---	---- ---	2256 218
8-30-508	CABLE, Tachometer, SC2-300H	8	★	---- ---	---- ---	*2426 286
8-37-517	SHAFT, Tachometer Cable Drive, SC2-300H	8	1	---- ---	---- ---	2096 976
8-38-0	**GLOVE COMPARTMENT LIGHT**					
8-38-4	BEZEL and LENS, Glove Box Lamp, SY1	8	1	---- ---	---- ---	1819 441
8-38-23	LAMP and SWITCH, Glove Box, SD3	8	1	---- ---	2258 436	2258 436
8-39-0	**HEADLAMP BEAM INDICATOR LIGHT**					
8-39-3	BEZEL and HOUSING, High Beam Indicator Lamp, SD3	8	1	---- ---	2257 723	
8-39-15	SOCKET, High Beam Indicator Lamp, SD1, SD2		1	2097 003	2097 003	2097 003

MyMopar.com

CODE	PART NAME AND DESCRIPTION	CYL.	PER CAR	VALIANT LANCER	PLYMOUTH DODGE	CHRYSLER IMPERIAL
8-39-0	**HEADLAMP BEAM INDICATOR LIGHT - Cont'd**					
8-39-15	SOCKET - Cont'd					
	SP1, SP2		1	---- ---	2257 440	---- ---
	w/CABLE, SD3	8	1	---- ---	2257 722	
	Printed Circuit High Beam Indicator Lamp, SP1, SP2, SD1, SD2		1	---- ---	2257 440	
8-39-16	SPRING, Headlamp Beam Indicator Lamp Socket		1	385 532	385 532	385 532
8-39-17	CONTACT, Headlamp Indicator Cable		★	*2256 966	*2256 966	*2256 966
8-40-0	**IGNITION LAMP**					
8-40-8	GASKET, Ignition and Starter Switch Lamp, SC1, SC2, SC3	8	1	---- ---	---- ---	1971 224
8-40-16	SOCKET, Ignition Switch Illuminated Lamp, SC1, SC2, SC3	8	1	---- ---	---- ---	2097 003
8-40-17	SPRING, Ignition Switch Lamp Socket Cable, SC1, SC2, SC3	8	1	---- ---	---- ---	385 532
8-40-19	CONTACT, Ignition Switch Lamp Socket Cable, SC1, SC2, SC3	8	1	---- ---	---- ---	*2256 966
8-41-0	**INSTRUMENT PANEL LIGHT**					
8-41-35	DIFFUSER, Light, SV1	6	1	2290 362		
	SV1	6	1	2257 865		
	SL1	6	2	2257 865		
8-41-36	SOCKET, Instrument Lamp	6	1	2096 374		
	Instrument Lamp, on Printed Circuit	6	2	2257 440		
	Instrument Lamp, SD3	8	3	---- ---	2097 003	
	Speedometer Lamp, SD3	8	1	---- ---	2097 003	
	Instrument Lamp, on Printed Circuit, SP1, SP2		4	---- ---	2257 440	
8-41-37	SPRING, Instrument Lamp Socket, SC1, SC2, SC3		★	385 532	385 532	385 532
	SY1	8	★	---- ---	---- ---	*1842 340
8-41-38	WASHER, Instrument Lamp Socket Insulating, SC1, SC2, SC3		★	858 245	858 245	858 245
	SY1	8	★	---- ---	---- ---	6006 106
8-41-39	CONTACT, Instrument Lamp Socket Cable		★	*2256 966	*2256 966	*2256 966
8-41-64	CONTACT, Speedometer Lamp Socket Cable		★	*2256 966	*2256 966	*2256 966
8-41-65	SPRING, Speedometer Lamp Socket		★	385 532	385 532	385 532
8-42-0	**MAP LAMP**					
8-42-2	LENS, Switch and Bracket, Map Lamp, Cv. Cp.	8	1	---- ---	2084 672	
8-42-5	LENS, Map Lamp, SD3	8	1	---- ---	1887 954	
	Map and Courtesy Lamp, SC1, SC2, SC3	8	1	---- ---	---- ---	1887 329
8-42-6	HOUSING and LENS, Map Lamp, SD3	8	1	---- ---	1887 955	
8-42-10	SOCKET, Map Lamp, SD3	8	1	---- ---	1704 875	
	Map Lamp, Cv. Cp., SP2, SD2	8	1	---- ---	1314 619	
	SY1	8	1	---- ---	---- ---	1971 879
		8	1	---- ---	---- ---	1704 467

★ Indicates use as required. Numerals in parentheses ( ) refer to notes. Printed in U.S.A.
⊟ Indicates parts not listed in any previous parts book. Prices and specifications subject to change without notice.
* Indicates change or addition. March 8, 1963 Supersedes May 1, 1962.

MyMopar.com

CODE	PART NAME AND DESCRIPTION	CYL.	PER CAR	VALIANT LANCER	PLYMOUTH DODGE	CHRYSLER IMPERIAL
8-42-0	**MAP LAMP - Cont'd**					
8-42-11	SPRING, Map Lamp Socket		★	---- ---	*1842 340	*1842 340
8-42-12	CONTACT, Map Lamp Socket		★	---- ---	*2256 966	*2256 966
8-42-25	SWITCH, Map Lamp, SD3	8	1	---- ---	1972 669	
	Map or Dome Lamp, SC1, SC2, SC3	8	2	---- ---	---- ---	1972 669
	Map and Courtesy Lamp Housing and Map, SY1	8	1	---- ---	---- ---	2198 090
	Map and Courtesy Lamp Housing with Power Antenna, SY1	8	1	---- ---	---- ---	2257 429
8-42-26	NUT, Map Lamp Switch Mounting, SC1, SC2, SC3	8	1	---- ---	---- ---	1971 521
8-42-29	BEZEL, Map Lamp Switch Mounting, SD3	8	1	---- ---	1887 789	---- ---
8-42-31	KNOB, Map Lamp Switch, SD3, SC1, SC2, SC3	8	1	---- ---	2257 478	2257 955
8-44-0	**BULB**					
8-44-1	BULB, Oil Warning Lamp, SP1, SP2		1	127 934	127 934	
	Low Oil Pressure Indicator Lamp, SD1, SD2		1	---- ---	127 934	
	High Beam Indicator Lamp		1	127 934	127 934	127 934
	High Beam Indicator Lamp, SY1	8	1	---- ---	---- ---	274 004
	Turn Signal Indicator Lamp		1	127 934	127 934	
	Turn Signal Indicator Lamp		2	---- ---	---- ---	127 934
	Instrument Lamp, on Printed Circuit	6	2	127 934		
	Instrument Lamp, on Printed Circuit, SP1, SP2		4	---- ---	127 934	
	Instrument Lamp	6	★	127 934		
	Dome Lamp		1	151 578	151 578	151 578
	Dome Lamp, Rear, Sub., SC1, SC3		1	---- ---	151 578	151 578
	Tail, Stop and Turn Signal Lamp		2	151 567	151 567	151 567
	Open Door Indicator Lamp		1	142 451	142 451	
	Back-Up Lamp, SL1, SD1 Sub., SD2 Sub., SY1		2	142 456	151 576	151 577
	Back-Up Lamp, except Sub., SD1, SD2		2	---- ---	142 456	
	Back-Up Lamp, SV1, SP1, SP2, SC1, SC2, SC3		2	151 576	151 576	151 576
	Glove Box		1	152 244	152 244	152 244
	Underhood Lamp		1	151 578	151 578	151 578
	Trunk Lamp, SC1, SC2, SC3		1	151 578	151 578	151 578
	Trunk Lamp, SY1	8	1	---- ---	---- ---	151 577
	Parking and Turn Signal Lamp		2	151 567	151 567	151 567
	Courtesy Lamp, except Cv. Cp.		2	142 453	142 453	
	Map Lamp, Cv. Cp.	8	1	---- ---	142 453	
	Rear Pocket Panel Courtesy Lamp, Cv. Cp., SY1	8	2	---- ---	142 453	142 453
	Map Lamp Socket	8	1	---- ---	---- ---	151 578
	Quarter Arm Rest Courtesy Lamp Socket, Cv. Cp., SC1, SC2, SC3	8	2	---- ---	---- ---	142 453
	Parking Brake Indicator Lamp		1	142 453	142 453	127 934
	Emergency Flasher Indicator Lamp		1	127 934	127 934	
	License Lamp, SY1		1	142 450	---- ---	142 450
	License Lamp, SP1, SP2		2	---- ---	142 450	
	License Lamp, Sub., SD1, SD2, SC1, SC3		2	---- ---	142 450	142 450
	License Lamp, except Sub., SD1, SD2, SC1, SC2, SC3		1	---- ---	142 450	142 450
	Push Button Gearshift Lamp, SP1, SP2, SC1, SC2, SC3		1	---- ---	152 280	152 240
	Instrument Push Button Title Illuminated Socket, SD1, SD2		2	---- ---	127 934	
	Instrument Gauges Illuminated Socket, SD1, SD2		3	---- ---	127 934	
	Ash Receiver Lamp	8	1	---- ---	---- ---	131 282
	Auto. Pilot Illuminated Lamp, SC1, SC2, SC3	8	1	---- ---	---- ---	152 240
	Ignition Switch Illuminated Lamp Socket, SC1, SC2, SC3	8	1	---- ---	---- ---	152 240

★ Indicates use as required. Numerals in parentheses ( ) refer to notes. Printed in U.S.A.
⊟ Indicates parts not listed in any previous parts book. Prices and specifications subject to change without notice.
March 8, 1963 Supersedes May 1, 1962. * Indicates change or addition.

MyMopar.com

CODE	PART NAME AND DESCRIPTION	CYL.	PER CAR	VALIANT LANCER	PLYMOUTH DODGE	CHRYSLER IMPERIAL
8-47-0	**LICENSE MOUNTING PARTS**					
8-47-8	BRACKET, License Plate, Front, SV1	6	2	2082 172		
	Front, SL1	6	2	2208 620		
	Front, w/GUARDS, B. E., SY1	8	2	---- ---	---- ---	2123 802
8-47-14	SCREW and WASHER, Front License Plate Bracket Mounting to Front Stone Deflector, SV1	6	2	6008 218		
	Front License Plate, SV1	6	2	6022 506		
	Front License Plate to Front License Plate Bracket, SL1	6	2	6023 349		
	Front License Plate to Front Bumper, SP1, SP2, SD3, SC1, SC2, SC3		2	---- ---	6023 349	
	Front License Plate to Front Bumper, SD1, SD2.		2	---- ---	6022 506	
	BOLT, Front Bumper License Bracket to License, SY1	8	2	---- ---	---- ---	181 055
	SCREW and WASHER, Front License Plate to Front License, SY1	8	2	---- ---	---- ---	6006 218
8-47-15	SPEED NUT, Rear License Plate, SV1	6	2	6023 269		
	Front License Plate to Front License Plate Bracket, SL1	6	2	6023 269		
	Rear License Plate to Rear Stone Deflector, SL1	6	2	6023 269		
	Bumper to License Plate		★	---- ---	6012 049	6012 049
	Front Bumper License Bracket to License Bolt, SY1	8	2	---- ---	---- ---	6012 054
8-47-21	BUTTON, Front License Plate Bracket to License Plate, SL1	6	2	1943 547		
	Front Bumper to License Plate, SC1, SC2, SC3		1	---- ---	1943 547	1943 547
	Rear Bumper to License Plate Screw, 4 D. Sub., SC1, SC3		1	---- ---	1943 547	1943 547
	Rear Bumper to License Plate, SY1	8	1	---- ---	---- ---	1943 547
8-47-57	FRAME, License Plate	8	1	---- ---	---- ---	1829 058
8-47-67	SPRING, License Plate Mounting Panel Hinge, except Sub., SC1, SC2, SC3		1	---- ---	1960 131	1960 131
8-47-68	PANEL, License Plate Mounting, Complete, White, except Sub., SC1, SC2, SC3		1	---- ---	2094 647	2094 647
	Partial, except Sub., SC1, SC2, SC3		1	---- ---	2188 619	2188 619
8-47-69	HINGE and BOLT, License Plate Mounting Panel, except Sub., SC1, SC2, SC3		1	---- ---	2094 641	2094 641
8-47-76	PIN, License Plate Mounting Panel Hinge, except Sub., SC1, SC2, SC3		1	---- ---	1960 127	1960 127
8-47-77	NUT, License Plate Mounting Panel Hinge, except Sub., SC1, SC2, SC3		2	---- ---	6023 351	6023 351
8-47-79	RETAINER, License Plate Mounting Panel Hinge Pin, except Sub., SC1, SC2, SC3		1	---- ---	6006 324	6006 324
8-47-93	SPACER, Front Bumper to License Plate, SD1, SD2		2	---- ---	2203 756	
8-47-126	BUMPER, Front License Plate Bracket, SV1	6	2	1698 868		
	Rear, License Plate	6	2	729 152		
	Rear, License Insert, except Sub., SP1, SP2		2	---- ---	729 152	
	Rear, License Plate Mounting Plate, except Sub., SC1, SC2, SC3		2	---- ---	2094 618	2094 618

★ Indicates use as required. Numerals in parentheses ( ) refer to notes. Printed in U.S.A.
⊟ Indicates parts not listed in any previous parts book. Prices and specifications subject to change without notice.
* Indicates change or addition March 8, 1963 Supersedes May 1, 1962.

MyMopar.com

CODE	PART NAME AND DESCRIPTION	CYL.	PER CAR	VALIANT LANCER	PLYMOUTH DODGE	CHRYSLER IMPERIAL
8-47-0	**LICENSE MOUNTING PARTS - Cont'd**					
8-47-126	BUMPER - Cont'd					
	License Plate Mounting Panel, except Sub., SP1, SP2, SD3, SC1, SC2, SC3		2	---- ---	2094 618	2094 618
	License Plate Mounting Panel, except Sub., SD1, SD2		2	---- ---	2252 184	
8-47-130	SCREW and WASHER, Rear License Plate, except Sub., SV1	6	2	6023 349		
	Rear License Plate to Rear Stone Deflector, except Sub., SL1	6	2	6023 349		
	Rear License Plate to License Mounting Panel, except Sub., SC1, SC2, SC3		2	---- ---	6022 506	6022 506
	Rear License Plate to Rear Bumper, Sub., SC1, SC3		2	---- ---	6023 349	6023 349
	Rear License Plate to Rear Bumper, SY1	8	2	---- ---	---- ---	6023 349
8-47-131	NUT, License Plate	6	2	2093 721		
	License Insert, except Sub., SP1, SP2		2	---- ---	6006 478	
	NUT and WASHER, Rear License Plate to License Panel, except Sub., SC1, SC2, SC3		2	---- ---	6023 271	6023 271
	Front License Plate to Front Bumper, SD1, SD2		2	---- ---	6023 271	
	Front License Plate Bracket to Front Bumper, SY1	8	2	---- ---	---- ---	6023 271
8-50-0	**PARKING AND DIRECTIONAL LAMP**					
8-50-82	SWITCH, Turn Signal, SP1, SP2, SD1, SD2, SY1		1	2258 700	2258 700	2197 376
	SD3, SC1 Police	8	1	---- ---	1972 196	1972 196
	SWITCH and CABLE, Turn Signal Electric, SD3, SC1 Police, SY1	8	1	2096 735	2096 735	
8-50-98	SWITCH, Turn Signal Actuating, SC1, SC2, SC3	8	1	---- ---	---- ---	1971 750
8-50-101	BRACKET, Turn Signal Actuating Switch Mounting, SC1, SC2, SC3	8	1	---- ---	---- ---	*1971 753
8-50-103	ARM PACKAGE, Turn Signal Switch Operating, SD3, SC1 Police	8	1	---- ---	2084 304	2084 304
	SY1	8	1	---- ---	---- ---	2240 250
8-50-104	PIVOT, Turn Signal Switch Operating Arm, SD3, SC1 Police, SY1	8	1	---- ---	1972 207	1972 207
8-50-125	SWITCH and BRACKET, Turn Signal Cancelling, SC1, SC2, SC3	8	1	---- ---	---- ---	2257 267
8-50-126	CAM, Turn Signal Switch Cancelling, SP1, SP2, SD1, SD2		1	2258 704	2258 704	
	FINGER, Turn Signal Switch Cancelling, SD3 w/o Power Steering, SC1 Police	8	1	---- ---	2197 170	2197 170
	FINGER, Turn Signal Switch Cancelling, SD3 w/ Power Steering, SY1	8	1	---- ---	1972 201	1972 201
8-50-129	LEVER and KNOB, Turn Signal Switch, SP1, SP2, SD1, SD2, SC1 Police		1	2258 710	2258 710	2291 539
	SD3	8	1	---- ---	2290 882	
	LEVER, SY1	8	1	---- ---	---- ---	2197 375
8-50-130	SCREW, Turn Signal Switch Lever Mounting		1	6023 490	6023 490	
	Mounting to Arm, SY1	8	1	---- ---	---- ---	159 929
8-50-133	KNOB, Turn Signal Actuating Switch, SC1, SC2, SC3	8	1	---- ---	---- ---	1971 751

MyMopar.com

CODE	PART NAME AND DESCRIPTION	CYL.	PER CAR	VALIANT LANCER	PLYMOUTH DODGE	CHRYSLER IMPERIAL
8-50-0	**PARKING AND DIRECTIONAL LAMP - Cont'd**					
8-50-135	PLATE, Turn Signal Switch Contact, SD3, SC1 Police, SY1	8	1	---- ---	2196 322	2196 322
8-50-156	SOCKET, Turn Signal Indicator Lamp, SP1, SP2		1	2257 440	2257 440	
	SD1, SD2		1	---- ---	1753 632	
	w/CABLE, SD3	8	1	---- ---	2257 720	
		8	2	---- ---	---- ---	2097 003
8-50-157	SPRING, Turn Signal Lamp		★	385 532	385 532	385 532
8-50-159	CONTACT, Socket		★	*2256 966	*2256 966	*2256 966
8-50-170	LENS, Turn Signal Lamp, SY1	8	2	---- ---	---- ---	2198 863
8-50-171	BEZEL and HOUSING, Turn Signal Lamp, SD3	8	1	---- ---	2257 719	
8-50-186	FLASHER, Turn Signal		1	*2426 166	*2426 166	*2426 166
8-50-191	CLIP, Turn Signal Flasher Mounting		1	6015 159	6015 159	6015 159
8-50-218	EXTENSION, Turn Signal Switch Wiring, SC1 Police	8	1	---- ---	---- ---	2291 504
8-50-303	LAMP, Parking and Turn Signal, Right, SV1, SP1, SP2, SC1, SC2, SC3		1	2243 482	2252 104	2188 438
	Left, SV1, SP1, SP2, SC1, SC2, SC3		1	2243 483	2252 105	2188 439
	Right, SD1, SD2, SY1		1	---- ---	2189 410	2188 852
	Left, SD1, SD2, SY1		1	---- ---	2189 411	2188 853
	w/HOUSING, SD3	8	2	---- ---	2094 601	
8-50-304	LAMP PACKAGE, Parking and Turn Signal, SL1	6	2	2240 263		
8-50-307	NUT, Parking and Turn Signal Lamp Housing Attaching, SD1, SD2		4	---- ---	6023 251	
	Parking and Turn Signal Lamp, SP1, SP2, SD1, SD2		4	---- ---	6023 251	
8-50-308	GASKET, Parking and Turn Signal Lamp, SV1, SP1, SP2, SY1		2	2093 350	2093 350	2188 864
	Housing, SC1, SC2, SC3	8	2	---- ---	---- ---	2188 436
8-50-315	BEZEL, Parking and Turn Signal Lamp, SL1	6	2	2188 277		
	Right, SY1	8	1	---- ---	---- ---	2188 856
	Left, SY1	8	1	---- ---	---- ---	2188 857
8-50-332	BRACKET, Parking and Turn Signal Lamp Support, Right, SD3	8	1	---- ---	2123 924	
	Left, SD3	8	1	---- ---	2123 925	
8-50-334	LENS and GASKET PACKAGE, Parking and Turn Signal Lamp, Right, SV1, SP1, SP2, SY1		1	2275 212	2275 212	2240 742
	Left, SV1, SP1, SP2, SY1		1	2275 211	2275 211	2240 743
	Right, SD1, SD2		1	---- ---	2279 930	
	Left, SD1, SD2		1	---- ---	2279 931	
8-50-335	LENS, Parking and Turn Signal Lamp, SL1,SD3		2	2188 279	2094 600	
	Right, SC1, SC2, SC3	8	1	---- ---	---- ---	2188 432
	Left, SC1, SC2, SC3	8	1	---- ---	---- ---	2188 433
8-50-337	SCREW, Parking and Turn Signal Lamp Lens to Housing, SV1, SP1, SP2		2	6025 057	6022 820	
	Lens Attaching, SV1, SP1, SP2		2	6023 141	6023 141	
	Lens Attaching, SL1	6	2	9415 912		
	Lens Attaching, SL1	6	2	9414 111		
	Lamp to Housing, SD1, SD2		4	---- ---	6023 356	

★ Indicates use as required. Numerals in parentheses ( ) refer to notes. Printed in U.S.A.
⊟ Indicates parts not listed in any previous parts book. Prices and specifications subject to change without notice.
* Indicates change or addition. March 8, 1963 Supersedes May 1, 1962.

MyMopar.com

CODE	PART NAME AND DESCRIPTION	CYL.	PER CAR	VALIANT LANCER	PLYMOUTH DODGE	CHRYSLER IMPERIAL
8-50-0	**PARKING AND DIRECTIONAL LAMP - Cont'd**					
8-50-337	SCREW - Cont'd					
	Lamp, SD1, SD2		4	---- ---	6022 154	
	Lens Attaching, SD3, SC1, SC2, SC3	8	4	---- ---	6022 856	1903 385
	Lens Attaching, SY1	8	4	---- ---	---- ---	9416 628
	Lens Center, SY1	8	4	---- ---	---- ---	9417 788
	To Fender, SY1	8	4	---- ---	---- ---	9413 433
	To Plate, SY1	8	4	---- ---	---- ---	9417 789
8-50-338	GASKET, Parking and Turn Signal Lamp Lens, SL1, SC1, SC2, SC3		2	2188 280	---- ---	2188 434
	To Housing, SD1, SD2		1	---- ---	2189 420	
8-50-349	SOCKET and CABLE, Parking and Turn Signal Lamp Housing, SL1	6	2	1903 387		
	SOCKET and CABLE, Parking and Turn Signal Lamp, SV1, SP1, SP2, SY1		2	1903 387	2252 100	2198 223
	SD1, SD2, SD3		2	---- ---	2188 712	
	SC1, SC2, SC3	8	2	---- ---	---- ---	2252 100
8-52-0	**STARTING MOTOR**					
8-52-4	STARTING MOTOR, Assembly, SP1, SP2, SD1, SD2.		1	2095 150	2095 150	
	w/Auto., Trans. SD3	8	1	---- ---	2095 150	2095 150
	w/Std. Trans., SD3, SC1, SC2	8	1	---- ---	1889 200	1889 200
8-52-39	SEAL, Cylinder Block to Starter, Approx. 3-1/3" I.D.	6	1	2128 412	2128 412	
	w/High Performance, SP2, SD2	8	1	---- ---	2129 234	
	w/Auto., Trans. SD3	8	1	---- ---	2129 234	2129 234
	w/Std. Trans., SD3, SC1, SC2, approx. 3-1/3" I.D.	8	1	---- ---	2128 412	2128 412
	w/Std. Trans., SD3, SC1, SC2, Approx. 3-1/2" I.D.	8	1	---- ---	2128 285	2128 285
8-52-328	RELAY, w/Std. Trans., SC1, SC2		1	2095 609	2095 609	2095 609
	w/Auto. Trans.		1	2095 608	2095 608	2095 608
8-52-368	CLIP, Starter Cable Rear Out Board Exhaust Manifold Bolt	6	1	6015 235		

FOR MODEL APPLICATION SEE CODE 8-52-4

	STARTING MOTOR AND COMPONENT PARTS	STARTER ASSEMBLIES 1889 200	STARTER ASSEMBLIES 2095 150
8-52-5	STUD, Mounting Lower	---- ---	2095 875
	SCREW and WASHER, Mounting Upper	---- ---	*6023 899
8-52-6	NUT, Mounting Stud, Lower	---- ---	271 506
8-52-41	CLUTCH	1889 129	2095 122
8-52-49	FORK and PIN PACKAGE, Shifting	2084 093	---- ---
	FORK, Shifting	---- ---	2095 134
8-52-50	PIN, Shifting Fork Pivot	---- ---	2095 133
8-52-61	RING, Clutch Actuator Retaining	---- ---	2095 130
8-52-67	SNAP RING, Clutch Drive Sleeve	2095 350	---- ---
	SNAP RING, Pinion Shaft Gear Retainer	---- ---	2095 117
	SNAP RING, Shaft	1752 375	---- ---

MyMopar.com

8-52-0 STARTING MOTOR - Cont'd

FOR MODEL APPLICATION SEE CODE 8-52-4

	STARTING MOTOR AND COMPONENT PARTS	STARTER ASSEMBLIES 1889 200	STARTER ASSEMBLIES 2095 150
8-52-76	HOUSING, Pinion	1889 154	---- ---
8-52-80	BEARING, Pinion Housing	2095 410	2095 410
	BEARING, End Head	---- ---	2095 242
8-52-82	STOP, SNAP RING, and STOP WASHER PACKAGE, Pinion	1881 727	---- ---
8-52-86	HOUSING and BEARING, Gear	---- ---	2095 112
8-52-87	ACTUATOR and RETAINING RING PACKAGE, Clutch Shifting	---- ---	2275 556
8-52-88	BOOT, Shifting Fork	1889 147	---- ---
8-52-89	SHAFT, Pinion	---- ---	2095 118
8-52-96	GEAR and SNAP RING PACKAGE, Pinion Shaft	---- ---	2275 557
8-52-98	THRUST WASHER and RETAINING RING PACKAGE, Pinion Shaft	---- ---	2275 558
8-52-100	RING, Pinion Shaft Retaining	---- ---	6022 006
8-52-101	COVER, Gear Housing	---- ---	2095 116
8-52-120	ARMATURE	1889 079	2095 094
8-52-121	THRUST WASHER PACKAGE, Armature	---- ---	2275 555
8-52-135	BRUSH PACKAGE	2240 749	
8-52-137	PLATE and BRUSH PACKAGE, Brush Holder	---- ---	2275 550
8-52-139	SPRING, Brush	636 841	636 841
8-52-140	SPRING PACKAGE, Brush	2084 666	2084 666
8-52-150	PLATE, Brush Holder	1889 044	---- ---
8-52-176	HEAD, Commutator End	1889 363	2095 076
8-52-180	THRUST WASHER PACKAGE, Commutator End	2240 529	---- ---
8-52-214	FIELD SERIES and SHUNT COIL PACKAGE	2084 088	2275 248
	COIL, Field Series, Complete	---- ---	2095 085
8-52-227	RIVET, Field Series Coil Ground	---- ---	2095 347
8-52-241	BOLT, Thru	1889 080	2095 105
8-52-341	CONTACT and COVER GASKET PACKAGE, Solenoid	2084 091	---- ---
8-52-342	CONTACT and SPRING PACKAGE, Solenoid Switch	---- ---	2275 553
8-52-344	COVER and GASKET PACKAGE, Solenoid	2084 090	---- ---
8-52-345	SOLENOID PACKAGE	1889 146	2275 554
8-52-354	STUD PACKAGE, Terminal Relay	2084 094	*2421 837
8-52-375	CORE, Solenoid Moving	1889 151	2095 155
8-52-389	SEAL, Solenoid Contact	---- ---	*2098 660

★ Indicates use as required. Numerals in parentheses ( ) refer to notes. Printed in U.S.A.
⊟ Indicates parts not listed in any previous parts book. Prices and specifications subject to change without notice.
* Indicates change or addition.

March 8, 1963 Supersedes May 1, 1962.

MyMopar.com

CODE	PART NAME AND DESCRIPTION	CYL.	PER CAR	VALIANT LANCER	PLYMOUTH DODGE	CHRYSLER IMPERIAL
8-53-0	**SWITCHES**					
8-53-150	SWITCH, Foot Dimmer		1	1881 938	1881 938	1881 938
8-53-234	SCREW, Instrument Housing to Switch Bezel Mounting, SC1, SC2, SC3	8	2	---- ---	---- ---	2257 448
8-53-266	CIRCUIT BREAKER, Rear Compartment Cigar Lighter, w/o Window Lift and Electric Seat, 8 amp., SY1	8	1	---- ---	---- ---	1642 386
	w/Electric Window Lift and 6 Way Shift, SY1	8	1	---- ---	---- ---	1642 477
8-53-267	BRACKET, Circuit Breaker Mounting, SY1	8	1	---- ---	---- ---	1479 060
8-53-270	SWITCH, Headlamp and Instrument Lamp, SP1, SP2, SD1, SD2		1	2298 855	2275 587	2275 586
	SD3	8	1	---- ---	2209 329	
8-53-294	BEZEL, Headlamp and Instrument Lamp Switch, SP1, SP2		1	---- ---	2256 432	
8-53-296	KNOB and STEM PACKAGE, Headlamp and Instrument Lamp Switch, SL1	6	1	2275 585		
	KNOB and STEM PACKAGE, SV1	6	1	2298 883		
	KNOB, SP1, SP2, SY1		1	---- ---	2258 211	2258 027
	SD1, SD2, SC1, SC2, SC3		1	---- ---	2197 383	2257 951
	SD3	8	1	---- ---	2257 477	
8-53-298	SPRING, Headlamp and Instrument Lamp Switch Knob Retainer	6	1	2076 145		
8-53-312	RETAINER, Headlamp and Instrument Lamp Switch, SD1, SD2		1	---- ---	2258 755	
8-53-317	BEZEL, Headlamp and Instrument Lamp Switch Mounting, SD3	8	1	---- ---	2097 503	
8-53-327	SWITCH or SENDING UNIT, Low Oil Pressure	6	1	*2256 800	2256 800	
		8	1	---- ---	1818 830	
8-55-0	**TAIL, STOP AND DIRECTIONAL SIGNAL LAMP**					
8-55-1	LAMP and GASKET PACKAGE, Tail, Stop and Turn Signal, Right, SV1	6	1	2279 919		
	Left, SV1	6	1	2279 920		
	LAMP PACKAGE, Tail, except Sub., SP1-M-H, SP2-M-H-P		2	---- ---	2421 135	
	LAMP and WASHER PACKAGE, Tail, Stop and Turn Signal, SY1	8	2	---- ---	---- ---	2298 775
8-55-7	LAMP, Tail, Stop and Turn Signal, Right, except Sub., SL1	6	1	2189 452		
	Left, except Sub., SL1	6	1	2189 453		
	Right, Sub., SL1	6	1	2189 454		
	Left, Sub., SL1	6	1	2189 455		
	Except Sub., w/o Plate, SP1, SP2		2	---- ---	2189 054	
	Sub., w/2189 396 PLATE, SP1, SP2		2	---- ---	2189 054	
	Except Sub., SD1, SD2 except SD2-P		2	---- ---	2189 176	
	Sub., SD1, SD2		2	---- ---	2189 300	
	Stop and Turn Signal, w/Bezel Moulding, Right, SD2-P	8	1	---- ---	2252 272	
	Left, SD2-P	8	1	---- ---	2252 273	
	Tail, SD2-P	8	2	---- ---	2189 176	
8-55-8	GASKET, Tail, Stop and Turn Signal Lamp to Body, Sub., SD3, SC1, SC3	8	2	---- ---	2189 550	2189 550
8-55-9	NUT, Tail, Stop and Turn Signal Lamp, SP1, SP2		6	---- ---	9417 621	
	NUT, attaching, Sub., SP1, SP2		6	---- ---	6022 853	
	NUT, attaching, Sub., SD1, SD2		6	---- ---	6023 111	

MyMopar.com

CODE	PART NAME AND DESCRIPTION	CYL.	PER CAR	VALIANT LANCER	PLYMOUTH DODGE	CHRYSLER IMPERIAL
8-55-0	**TAIL, STOP AND DIRECTIONAL SIGNAL LAMP - Cont'd**					
8-55-9	NUT - Cont'd					
	J/NUT, Attaching, Sub., SD3, SC1, SC3	8	8	---- ---	6014 023	6014 023
	NUT, Tail, Stop and Turn Signal Lamp Bezel, except Sub., SD3, SC1, SC2, SC3	8	4	---- ---	6008 043	6008 043
	NUT and WASHER, SY1	8	4	---- ---	---- ---	6022 162
8-55-10	SCREW, Tail, Stop and Turn Signal Lamp, SV1	6	6	6023 081		
	Sub., SL1	6	8	9413 316		
	SCREW, Attaching, Sub., SP1, SP2		6	---- ---	9416 951	
	SCREW, Attaching, Sub., SC1, SC3	8	4	---- ---	---- ---	9417 580
	SCREW, Attaching, Sub., SC1, SC3	8	4	---- ---	---- ---	9417 581
	STUD, SY1	8	4	---- ---	---- ---	6023 080
8-55-23	PLATE, Tail, Stop and Turn Signal Lamp Mounting, Sub., SP1, SP2		2	---- ---	2189 395	
	REINFORCEMENT, Rear Extension Tail, Stop and Turn Signal Lamp Mounting Plate, Sub., SP1, SP2		2	---- ---	2255 382	
	REINFORCEMENT, Tail Lamp Opening, except Sub., SD3, SC1, SC2, SC3	8	2	---- ---	2189 636	2189 636
8-55-57	SOCKET and BOOT, Tail, Stop and Turn Signal Lamp, SV1	6	2	2290 204		
	SL1	6	2	2096 410		
	SOCKET and BOOT, Tail Lamp, except Sub., SP1-M-H, SP2-M-H-P		2	---- ---	2096 648	
	Except Sub., SP1, SP2, SD1, SD2, SC1, SC2, SC3		2	---- ---	2290 263	1841 893
	SD3	8	2	---- ---	1841 893	
	Sub., SD1, SD2		2	---- ---	2096 410	
8-55-63	SPRING, INSULATOR and CONTACT PACKAGE, Tail, Stop and Turn Signal Lamp Socket		★	2198 860	2198 860	2198 860
	Tail Lamp, except Sub., SP1-M-H, SP2-H-M-P		★	---- ---	2257 100	
8-55-136	HOUSING and REFLECTOR, Tail, Stop and Turn Signal Lamp, except Sub., SD3, SC1, SC2, SC3	8	2	---- ---	2189 767	2189 767
8-55-140	WELT, Tail, Stop and Turn Signal Lamp, except Sub., SD3, SC1, SC2, SC3	8	2	---- ---	2252 358	2252 358
8-55-158	BEZEL, Tail, Stop and Turn Signal Lamp, Right, except Sub., SL1	6	1	2189 460		
	Left, except Sub., SL1	6	1	2189 461		
	Right, Sub., SL1, SD3, SC1, SC3		1	⊟2189 462	*2189 832	*2189 832
	Left, Sub., SL1, SD3, SC1, SC3		1	⊟2189 463	*2189 833	*2189 833
	BEZEL, Tail, Stop and Turn Signal Lamp, except Sub., Outer, SD1, SD2, except SD2-P		2	---- ---	⊟2189 189	
	BEZEL, Tail Lamp, Outer, SD2-P	8	2	---- ---	⊟2189 189	
	BEZEL, Tail, Stop and Turn Signal Lamp, Sub., Outer, SD1, SD2		2	---- ---	⊟2189 302	
	BEZEL, LENS and GASKET PACKAGE, Sub., SD1, SD2		2	---- ---	2279 925	
	BEZEL, LENS and GASKET PACKAGE, except Sub., SD1, SD2 except SD2-P		2	---- ---	2279 923	
	BEZEL, LENS and GASKET PACKAGE, Tail Lamp, SD2-P		2	---- ---	2279 923	
	BEZEL, Stop and Turn Signal Lamp, Right, SD2-P	8	1	---- ---	2189 178	
	Left, SD2-P	8	1	---- ---	2189 179	
	BEZEL, Tail, Stop and Turn Signal Lamp, except Sub., SD3, SC1, SC2, SC3	8	2	---- ---	2189 529	2189 529
	SHELL, Tail, Stop and Turn Signal Lamp Socket, Sub., SD3, SC1, SC3	8	2	---- ---	2189 834	2189 834

★ Indicates use as required. Numerals in parentheses ( ) refer to notes. Printed in U.S.A.
⊟ Indicates parts not listed in any previous parts book. Prices and specifications subject to change without notice.
* Indicates change or addition. March 8, 1963 Supersedes May 1, 1962.

MyMopar.com

CODE	PART NAME AND DESCRIPTION	CYL.	PER CAR	VALIANT LANCER	PLYMOUTH DODGE	CHRYSLER IMPERIAL
8-55-0	**TAIL, STOP AND DIRECTIONAL SIGNAL LAMP - Cont'd**					
8-55-159	STUD, Tail, Stop and Turn Signal Lamp Bezel Attaching, except Sub., SL1	6	6	6022 965		
	SCREW and WASHER, Tail, Stop and Turn Signal Lamp Bezel Attaching, except Sub., SD1, SD2		2	---- ---	6023 488	
8-55-160	TAPE, Tail, Stop and Turn Signal Lamp Base, Outer, SY1	8	★	---- ---	---- ---	⊟2424 297
8-55-163	WASHER, Tail, Stop and Turn Signal Lamp Bezel Sealing, except Sub., SL1	6	2	6022 007		
8-55-194	LENS and GASKET PACKAGE, Tail, Stop and Turn Signal Lamp, SV1, SP1, SP2		2	2279 916	2275 247	
	SL1	6	2	2279 922		
	Right, Sub., SD3, SC1, SC3	8	1	---- ---	2279 934	2279 934
	Left, Sub., SD3, SC1, SC3	8	1	---- ---	2279 935	2279 935
	Except Sub., SD3, SC1, SC2, SC3	8	2	---- ---	2298 774	2298 774
	SY1	8	2	---- ---	---- ---	2298 776
8-55-209	SCREW, Tail, Stop and Turn Signal Lamp Lens, SV1, SY1		6	6006 036	---- ---	6023 390
	Sub., SD3, SC1, SC3	8	12	---- ---	6022 594	6022 594
	Except Sub., SD3, SC1, SC2, SC3	8	4	---- ---	6006 010	6006 010
	Outer Housing, SY1	8	2	---- ---	---- ---	6022 953
8-55-214	GASKET, Tail, Stop and Turn Signal Lamp Lens, Sub., SD3, SC1, SC3	8	2	---- ---	2189 548	2189 548
	SY1	8	2	---- ---	---- ---	2189 560
8-55-220	REFLECTOR, Tail, Stop and Turn Signal Lamp, except Sub., SL1	6	2	*2189 464		
	Sub., SL1	6	2	*2189 466		
	SY1	8	2	---- ---	---- ---	⊟2189 562
8-55-293	SPRING, Tail, Stop and Turn Signal Lamp Socket		★	*1842 340	*1842 340	*1842 340
8-55-300	CONTACT, Tail, Stop and Turn Signal Lamp Socket		★	*2256 966	*2256 966	*2256 966
8-55-335	EXTENSION and INSERT PACKAGE, Tail, Stop and Turn Signal Lamp Bezel, Right, Sub., SC1, SC3	8	1	---- ---	2279 932	2279 932
	Left, Sub., SD3, SC1, SC3	8	1	---- ---	2279 933	2279 933
8-55-380	MOULDING, Stop and Turn Signal Lamp Bezel, Right, SD2-P	8	1	---- ---	2189 190	
	Left, SD2-P	8	1	---- ---	2189 191	
8-56-0	**BACK-UP LAMP**					
8-56-1	LAMP, Back-Up, SV1	6	2	2189 517		
	Right, except Sub., SL1	6	1	2188 474		
	Left, except Sub., SL1	6	1	2188 475		
	Right, Sub., SL1	6	1	2188 476		
	Left, Sub., SL1	6	1	2188 477		
	Except Sub., SP1, SP2		2	---- ---	2189 063	
	Sub., SD1, SD2		2	---- ---	2189 309	
	Right, SD2-P	8	1	---- ---	2252 216	
	Left, SD2-P	8	1	---- ---	2252 217	
	w/Bezel Moulding, Right, except Sub., SD1-L-H, SD2-L-H		1	---- ---	2189 664	
	w/Bezel Moulding, Left, except Sub., SD1-L-H, SD2-L-H		1	---- ---	2189 665	
	Back-Up and License, Right, Sub., SD3	8	1	---- ---	2094 988	
	Left, Sub., SD3	8	1	---- ---	2094 989	

★ Indicates use as required. Numerals in parentheses ( ) refer to notes. Printed in U.S.A.
⊟ Indicates parts not listed in any previous parts book. Prices and specifications subject to change without notice.
March 8, 1963 Supersedes May 1, 1962. * Indicates change or addition.

MyMopar.com

CODE	PART NAME AND DESCRIPTION	CYL.	PER CAR	VALIANT LANCER	PLYMOUTH DODGE	CHRYSLER IMPERIAL
8-56-0	**BACK-UP LAMP - Cont'd**					
8-56-1	LAMP - Cont'd					
	Back-Up and License, Right, Sub., SP1, SP2, SC1, SC3		1	---- ---	2189 432	2094 988
	Left, Sub., SP1, SP2, SC1, SC3		1	---- ---	2189 433	2094 989
	Right, SY1	8	1	---- ---	---- ---	1961 450
	Left, SY1	8	1	---- ---	---- ---	1961 451
8-56-2	SWITCH, Back-Up Lamp, w/Std. Trans., SC1, SC2		1	2258 404	2258 404	2258 404
	w/Auto. Trans.		1	1971 833	1972 052	1972 052
8-56-4	NUT, Back-Up Lamp, except Sub., SP1, SP2		6	---- ---	9417 621	
	NUT, Housing Panel, SD2-P	8	12	---- ---	6023 276	
	J/NUT, Sub., SD1, SD2		6	---- ---	6023 111	
	J/NUT, to Bumper, SY1	8	4	---- ---	---- ---	6022 142
8-56-7	LENS, Back-Up Lamp, SL1	6	2	2188 483		
	Back-Up and License Lamp, Right, Sub., SP1, SP2, SC1, SC3		1	---- ---	2189 488	2094 992
	Left, Sub., SP1, SP2, SC1, SC3		1	---- ---	2189 489	2094 993
	Back-Up and License Lamp, Right, Sub., SD3	8	1	---- ---	2094 992	
	Left, Sub., SD3	8	1	---- ---	2094 993	
	Right, SY1	8	1	---- ---	---- ---	1961 434
	Left, SY1	8	1	---- ---	---- ---	1961 435
8-56-8	LENS and GASKET PACKAGE, Back-Up Lamp, SV1	6	2	2279 915		
	Except Sub., SP1, SP2		2	---- ---	2275 246	
	Except Sub., SD1, SD2, except SD2-P		2	---- ---	2279 924	
	SD2-P	8	2	---- ---	2299 328	
	Sub., SD1, SD2		2	---- ---	2279 926	
	Except Sub., SD3, SC1, SC2, SC3	8	2	---- ---	2298 773	2298 773
8-56-10	SCREW, Back-Up Lamp Lens Attaching, SL1	6	4	6022 047		
	To Quarter Panel, SL1	6	4	9413 316		
	Back-Up Lamp, SV1, SD2-P		4	9417 427	6023 282	
	Back-Up and License Lamp, Sub., SP1, SP2		4	---- ---	9413 272	
	SP1, SP2, SD1, SD2		2	---- ---	6025 081	
	Back-Up and License Lamp Lens, Sub., SP1, SP2.		6	---- ---	6006 010	
	Lens Attaching, except Sub., SP1, SP2		4	---- ---	1877 956	
	Back-Up and License Lamp, Sub., SD3, SC1, SC3	8	6	---- ---	9416 049	9416 049
	Back-Up and License Lamp Lens to Housing, Sub., SD3, SC1, SC3	8	6	---- ---	6006 010	6006 010
	To Bumper, SY1	8	4	---- ---	---- ---	9415 540
8-56-23	GASKET, Back-Up Lamp Lens, SV1	6	2	2189 521		
	SL1	6	2	2189 685		
	SD2-P	8	2	---- ---	2252 214	
	Back-Up and License Lamp Lens, Sub., SP1, SP2.		2	---- ---	2189 490	
	Back-Up and License Lamp Lens, Sub., SD3, SC1, SC3	8	2	---- ---	2094 994	2094 994
	Lens, SY1	8	2	---- ---	---- ---	1961 452
8-56-25	WASHER, Back-Up Lamp Socket		★	6006 106	6006 106	6006 106
8-56-27	SPRING, Back-Up Lamp Socket		★	*1842 340	*1842 340	*1842 340
	SPRING, INSULATOR and CONTACT PACKAGE		★	2257 100	2257 100	2257 100
8-56-33	CONTACT, Back-Up Lamp Socket		★	*2256 966	*2256 966	*2256 966

★ Indicates use as required. Numerals in parentheses ( ) refer to notes. Printed in U.S.A.
⊟ Indicates parts not listed in any previous parts book. Prices and specifications subject to change without notice.
* Indicates change or addition. March 8, 1963 Supersedes May 1, 1962.

MyMopar.com

CODE	PART NAME AND DESCRIPTION	CYL.	PER CAR	VALIANT LANCER	PLYMOUTH DODGE	CHRYSLER IMPERIAL
8-56-O	**BACK-UP LAMP - Cont'd**					
8-56-34	SOCKET, Back-Up Lamp, SL1		2	1878 128		
	SOCKET and BOOT, SV1	6	2	2096 141		
	SP1, SP2, SY1		2	---- ---	2096 648	2096 648
	SOCKET and BOOT, Sub., SD1, SD2		2	---- ---	2290 189	
	Except Sub., SD1, SD2, except SD2-P		2	---- ---	*2290 189	
	SD2-P	8	2	---- ---	2291 087	
	Except Sub., SD3, SC1, SC2, SC3	8	2	---- ---	*2290 189	*2290 189
	Sub., SD3, SC1, SC3	8	2	---- ---	2096 648	2096 648
8-56-35	CLIP, Back-Up Lamp Switch Wire, on Push Button Box, SY1	8	1	---- ---	---- ---	6015 329
8-56-36	BEZEL, Back-Up Lamp, Right, Sub., SL1	6	1	2188 480		
	Left, Sub., SL1	6	1	2188 481		
	Right, except Sub., SL1	6	1	2188 478		
	Left, except Sub., SL1	6	1	2188 479		
	Right, except Sub., SD1, SD2, except SD2-P		1	---- ---	2189 178	
	Left, except Sub., SD1, SD2 except SD2-P		1	---- ---	2189 179	
	BEZEL, Back-Up Lamp, except Sub., SD3, SC1, SC2, SC3	8	2	---- ---	2189 530	2189 530
	BEZEL and GASKET PACKAGE, Right, SY1	8	1	---- ---	---- ---	2240 731
	Left, SY1	8	1	---- ---	---- ---	2240 732
8-56-40	GASKET, Back-Up Lamp, except Sub., SV1	6	2	2255 126		
	Housing, SD2-P	8	2	---- ---	2252 233	
8-56-41	STUD, Back-Up Lamp, SP2-P	8	4	---- ---	6022 296	
	SD2-P	8	4	---- ---	6023 282	
8-56-43	HOUSING, Back-Up Lamp, except Sub., SD3, SC1, SC2, SC3	8	2	---- ---	2189 761	2189 761
8-56-44	GASKET, Back-Up Lamp Bezel, SL1 except Sub.	6	2	2188 485		
	SY1	8	2	---- ---	---- ---	1961 448
8-56-46	GASKET, Back-Up Lamp, Switch Hole Plug, w/Std. Trans., SC1, SC2		1	1302 807	1302 807	1302 807
	GASKET, Back-Up Lamp Switch, w/Std. Trans., SC1, SC2		1	1302 807	1302 807	1302 807
8-56-52	NUT, Back-Up Lamp Bezel, except Sub., SD3, SC1, SC2, SC3	8	4	---- ---	6008 043	6008 043
	Back-Up Lamp Housing to Lens Bezel, SY1	8	8	---- ---	---- ---	1961 505
8-56-63	PLUG, Back-Up and License Lamp Button, Sub., SP1, SP2		2	---- ---	2094 697	
	Back-Up Lamp Housing Socket Hole, Sub., SD3, SC1, SC3	8	2	---- ---	2094 697	2094 697
	Housing, except Sub., SD3, SC1, SC2, SC3	8	2	---- ---	2094 697	2094 697
8-56-73	PANEL, Deck Opening Lower Panel and Back-Up Lamp Housing, Right, SD2-P	8	1	---- ---	2252 208	
	Left, SD2-P	8	1	---- ---	2252 209	
8-56-75	MOULDING, Back-Up Lamp, Right, except Sub., SD1-L-H, SD2-L-H		1	---- ---	2189 190	
	Left, except Sub., SD1-L-H, SD2-L-H		1	---- ---	2189 191	
8-57-O	**LICENSE PLATE LAMP**					
8-57-7	PLUG, License Lamp Button, Sub., SP1-L, M, SP2-L, M, SD1, SD2		2	---- ---	2094 697	

★ Indicates use as required. Numerals in parentheses ( ) refer to notes. Printed in U.S.A.
⊟ Indicates parts not listed in any previous parts book. Prices and specifications subject to change without notice.
March 8, 1963 Supersedes May 1, 1962. * Indicates change or addition.

MyMopar.com

CODE	PART NAME AND DESCRIPTION	CYL.	PER CAR	VALIANT LANCER	PLYMOUTH DODGE	CHRYSLER IMPERIAL
8-57-0	**LICENSE PLATE LAMP - Cont'd**					
8-57-10	LAMP, License	6	1	2093 340		
	Except Sub., SD1, SD2		1	---- ---	2189 952	
	Except Sub., SP1, SP2, SC1, SC2, SC3		1	---- ---	2243 188	1878 196
	Except Sub., SD3	8	1	---- ---	1878 196	
	Right, Sub., SP1-L, M, SP2-L, M, SD1, SD2		1	---- ---	2189 434	
	Left, Sub., SP1-L, M, SP2-L, M, SD1, SD2		1	---- ---	2189 435	
	SY1	8	1	---- ---	---- ---	2188 824
8-57-11	SCREW, License Lamp Attaching, except Sub., SC1, SC2, SC3		2	---- ---	1878 893	1878 893
	Sub., SP1-L, M, SP2-L, M, SD1, SD2		4	---- ---	9413 272	
	Lens, Sub., SP1, SP2		6	---- ---	6006 010	
	SP1-L, M, SP2-L, M		2	---- ---	6025 081	
8-57-13	NUT, License Lamp, SY1	8	2	---- ---	---- ---	6006 297
8-57-15	GASKET, License Lamp, Sub., SP1-L, M, SP2-L, M, SD1, SD2		2	---- ---	2252 383	
8-57-54	LENS and GASKET PACKAGE, License Lamp, SY1.		1	1879 566	---- ---	1879 566
8-57-55	LENS, License Lamp, Right, Sub., SP1-L, M, SP2-L, M, SD1, SD2		1	---- ---	2189 486	
	Left, Sub., SP1-L, M, SP2-L, M, SD1, SD2		1	---- ---	2189 487	
8-57-79	SOCKET and CABLE, License Lamp, SY1		1	2094 628	---- ---	2094 628
	SP1, SP2		2	---- ---	2096 141	
	Sub., SD1, SD2, SD3, SC1, SC3		2	---- ---	2096 141	2096 141
	Except Sub., SD1, SD2, SD3, SC1, SC2, SC3		1	---- ---	2096 141	2096 141
8-57-89	SPRING, License Lamp Socket		★	*1842 340	*1842 340	*1842 340
	SPRING, INSULATOR and CONTACT PACKAGE		★	2257 100	2257 100	2257 100
8-57-90	WASHER, License Lamp Socket		★	6006 106	6006 106	6006 106
8-57-109	CONTACT, License Lamp Cable		★	*2256 966	*2256 966	*2256 966
8-58-0	**STOP LAMP**					
8-58-60	SWITCH, Stop Lamp, Mechanical Type		1	2291 382	2258 864	2258 864
8-58-61	SCREW and WASHER, Stop Lamp Switch Mounting		1	*6023 541	6023 541	6023 541

NOTES

★ Indicates use as required. Numerals in parentheses ( ) refer to notes. Printed in U.S.A.
⊟ Indicates parts not listed in any previous parts book. Prices and specifications subject to change without notice.
* Indicates change or addition. March 8, 1963.

MyMopar.com

CODE	PART NAME AND DESCRIPTION	CYL.	PER CAR	VALIANT LANCER	PLYMOUTH DODGE	CHRYSLER IMPERIAL

NOTES

★ Indicates use as required. Numerals in parentheses ( ) refer to notes. Printed in U.S.A.
⊟ Indicates parts not listed in any previous parts book. Prices and specifications subject to change without notice.
March 8, 1963. * Indicates change or addition.

MyMopar.com

GROUP 9 - ENGINE

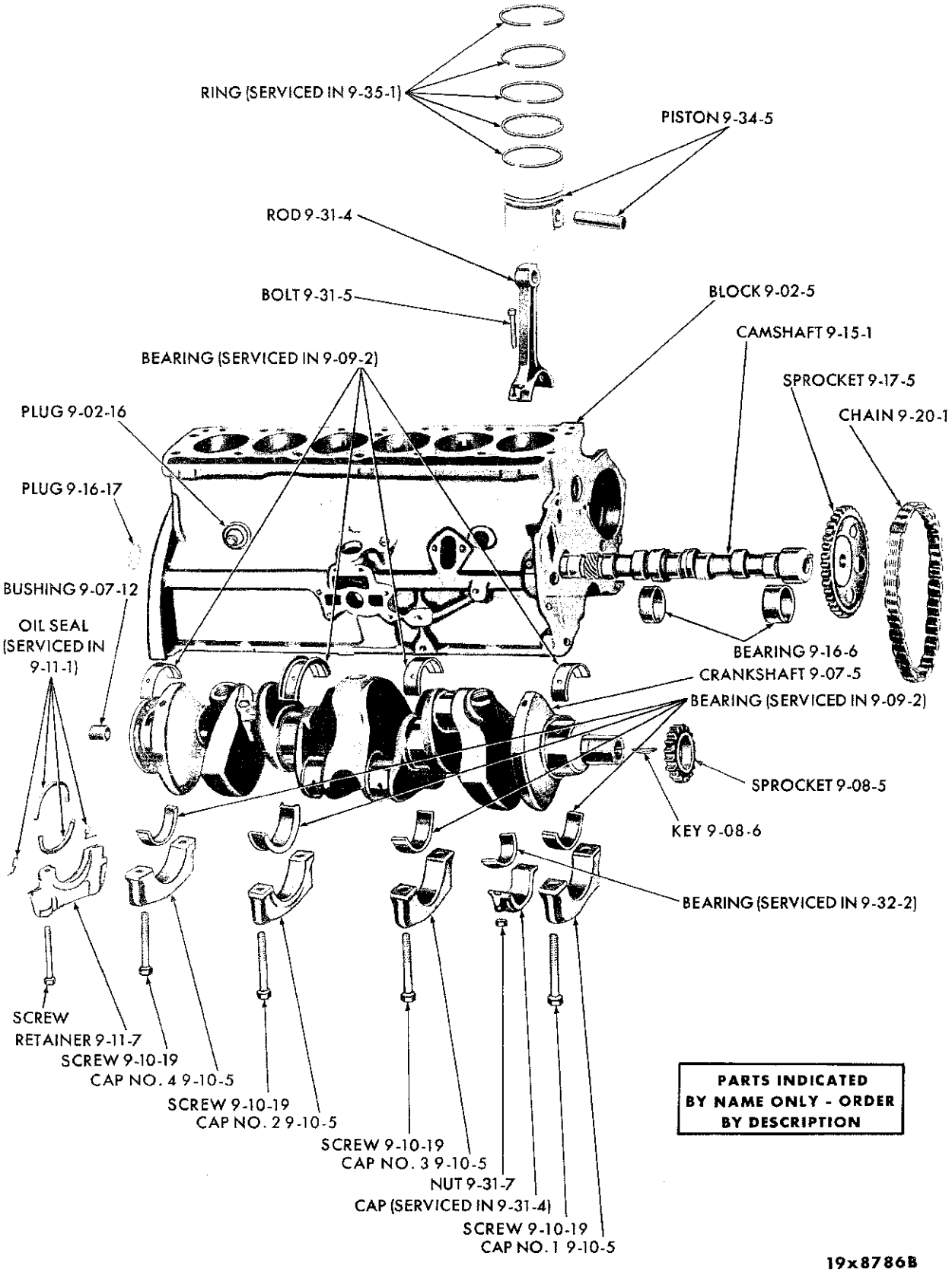

SHORT ENGINE - 6 CYLINDER

MyMopar.com

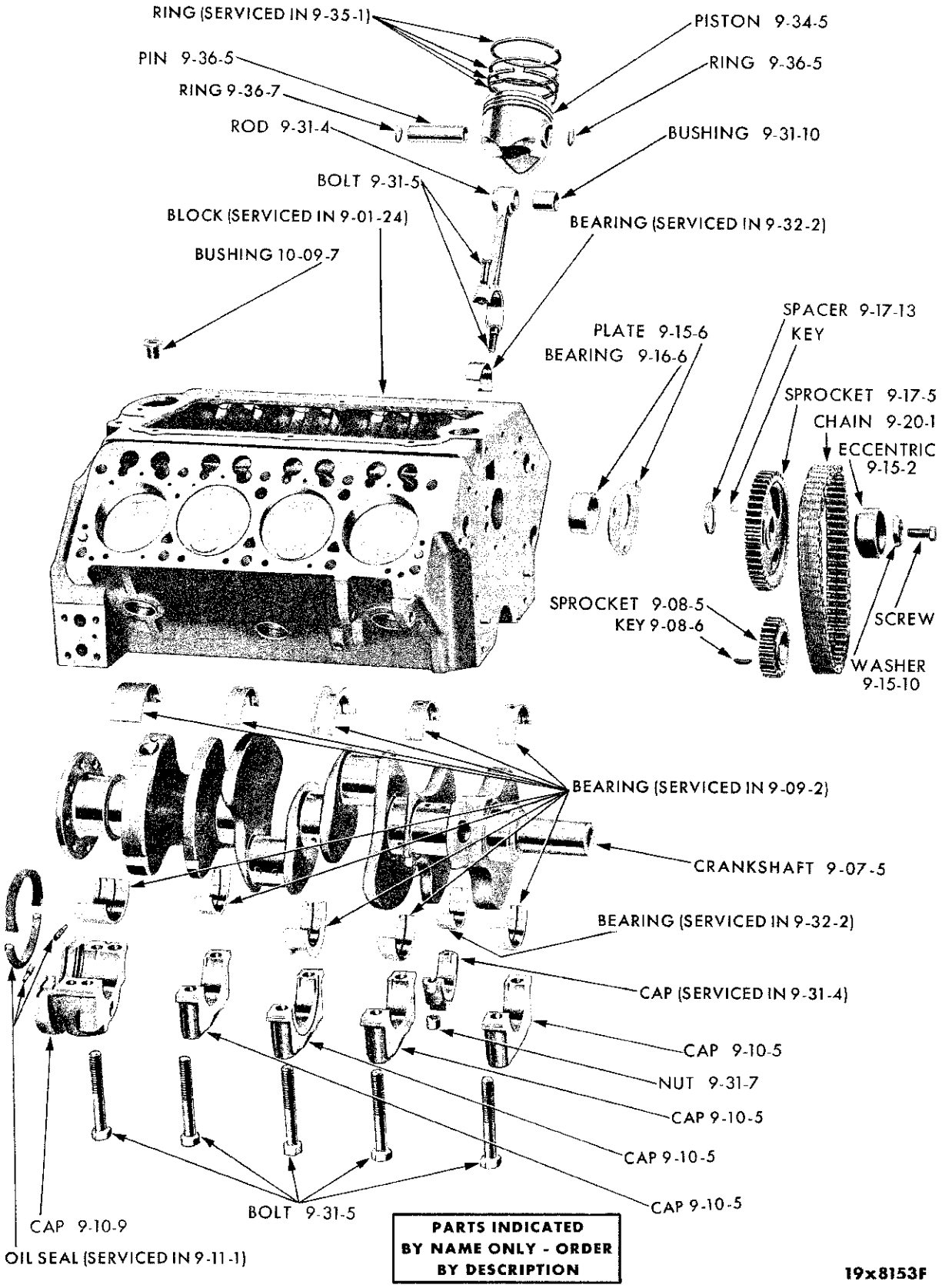

SHORT ENGINE - V8 CYLINDER

MyMopar.com

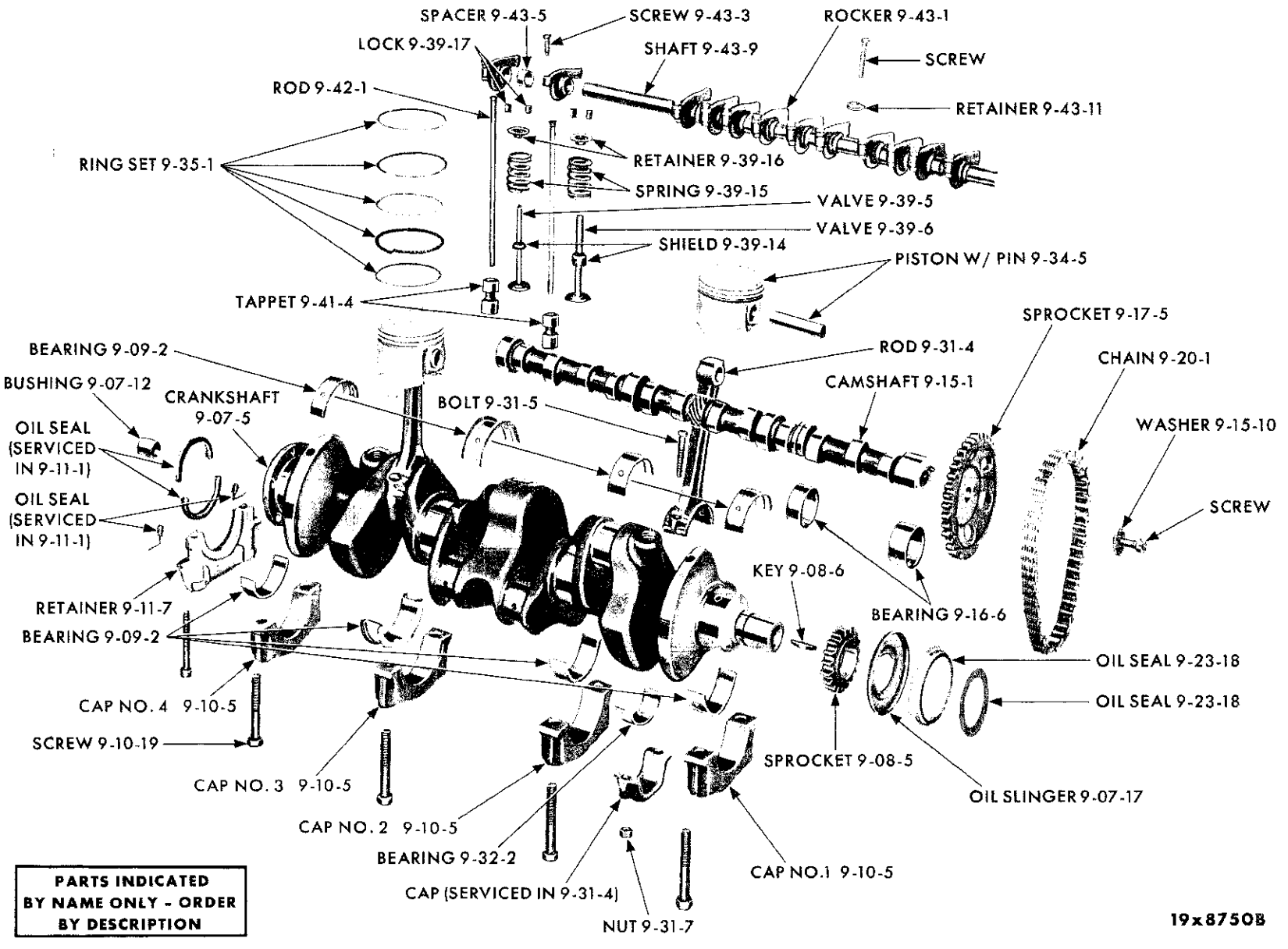

ENGINE INTERNAL PARTS - 6 CYLINDER

MyMopar.com

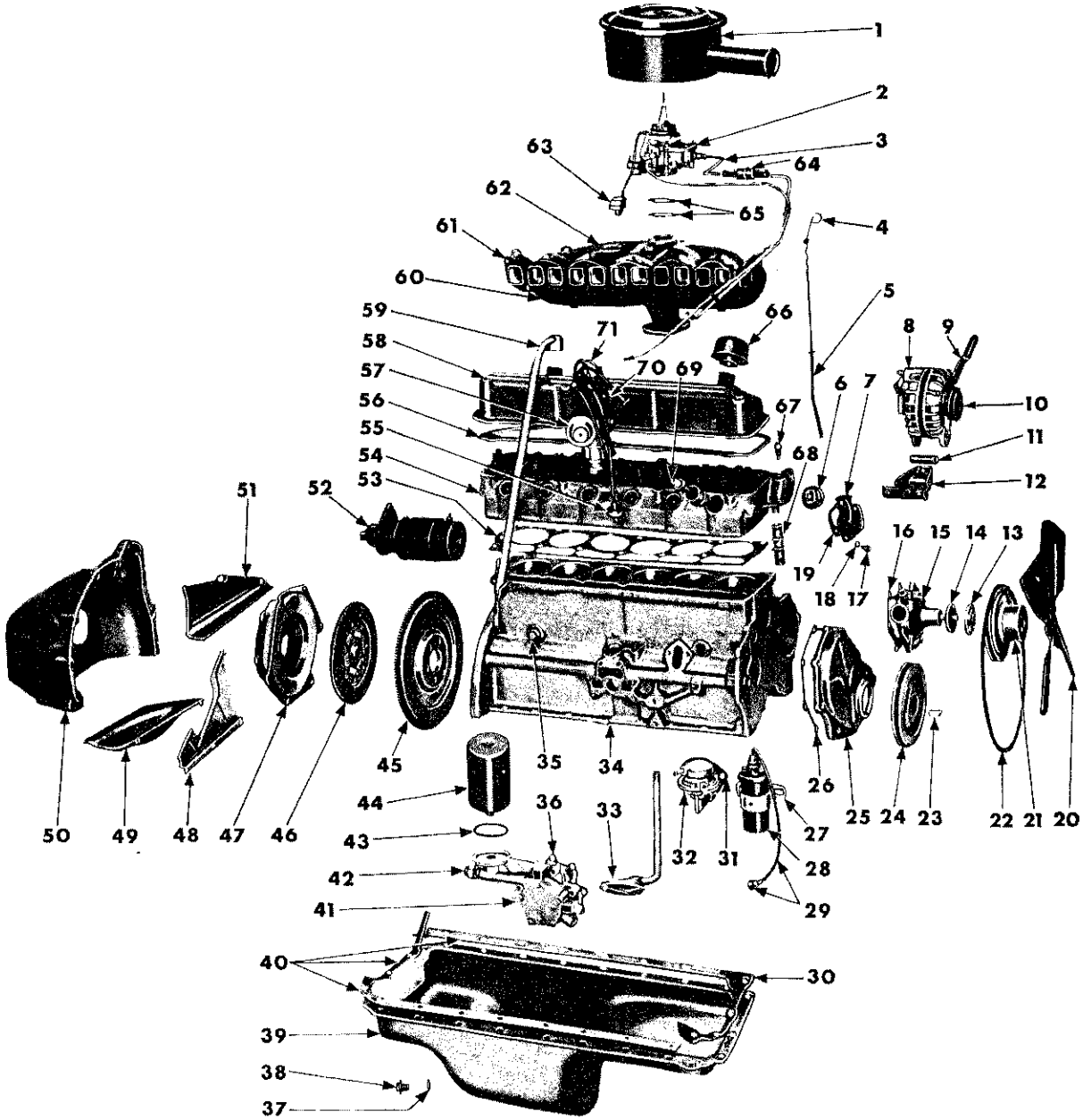

ENGINE EXTERNAL PARTS - 6 CYLINDER (225 CU. IN.)

MyMopar.com

ENGINE EXTERNAL PARTS - 6 CYLINDER (225 CU. IN.)

Ref. No.	Name	Part Type Code
1	Air Cleaner	14-29-2
2	Carburetor	14-30-1
3	Tube	14-89-2
4	Indicator	10-03-4
5	Tube	10-03-7
6	Thermostat	7-41-4
7	Elbow	9-05-5
8	Alternator	8-28-3
9	Strap	8-28-15
10	Pulley	8-28-297
11	Spacer	Not Serviced
12	Bracket	8-28-36
13	Spacer	7-02-16
14	Hub	7-05-1
15	Pump Package	7-42-1
16	Gasket	7-44-4
17	Screw	
18	Washer	
19	Gasket	9-05-6
20	Fan	7-02-1
21	Pulley	7-06-14
22	Belt	7-03-1
23	Key	
24	Damper	9-13-5
25	Cover	9-23-5
26	Gasket	9-23-17
27	Bracket	8-35-41
28	Coil	8-35-4
29	Cable	8-36-49
30	Gasket	10-24-1
31	Gasket	14-74-1
32	Pump Package	14-73-1
33	Strainer, w/Pipe	10-23-7
34	Block	9-02-5
35	Plug	
36	Gasket	10-07-11
37	Gasket	10-24-38
38	Plug	10-24-37
39	Pan	10-24-4
40	Gasket (Serviced in 10-24-1)	
41	Pump	10-07-6
42	Cap	10-22-40
43	Gasket (Serviced in 10-26-6)	
44	Filter	10-26-6
45	Flywheel	9-45-1
46	Disc	6-13-1
47	Cover, w/Plate	6-14-1
48	Seal	6-10-10
49	Pan	6-10-2
50	Housing	6-09-1
51	Strut	6-09-11
52	Starter	8-52-4
53	Gasket	9-03-5
54	Head	9-03-4
55	Cover	8-36-117
56	Gasket	9-03-29
57	Distributor	8-27-1
58	Cover	9-03-28
59	Pipe	10-02-15
60	Manifold	9-48-6
61	Gasket (Serviced in 9-50-1)	
62	Manifold	9-48-7
63	Choke	14-39-45
64	Fuel Filter	14-67-1
65	Gasket	14-30-2
66	Air Cleaner	10-01-21
67	Sending Unit	8-37-155
68	Hose, Water Pump By-Pass	7-14-9
69	Spark Plug	8-36-114
70	Cap	8-27-71
71	Cable Set	8-36-1

PARTS INDICATED BY NAME ONLY - ORDER BY DESCRIPTION

MyMopar.com

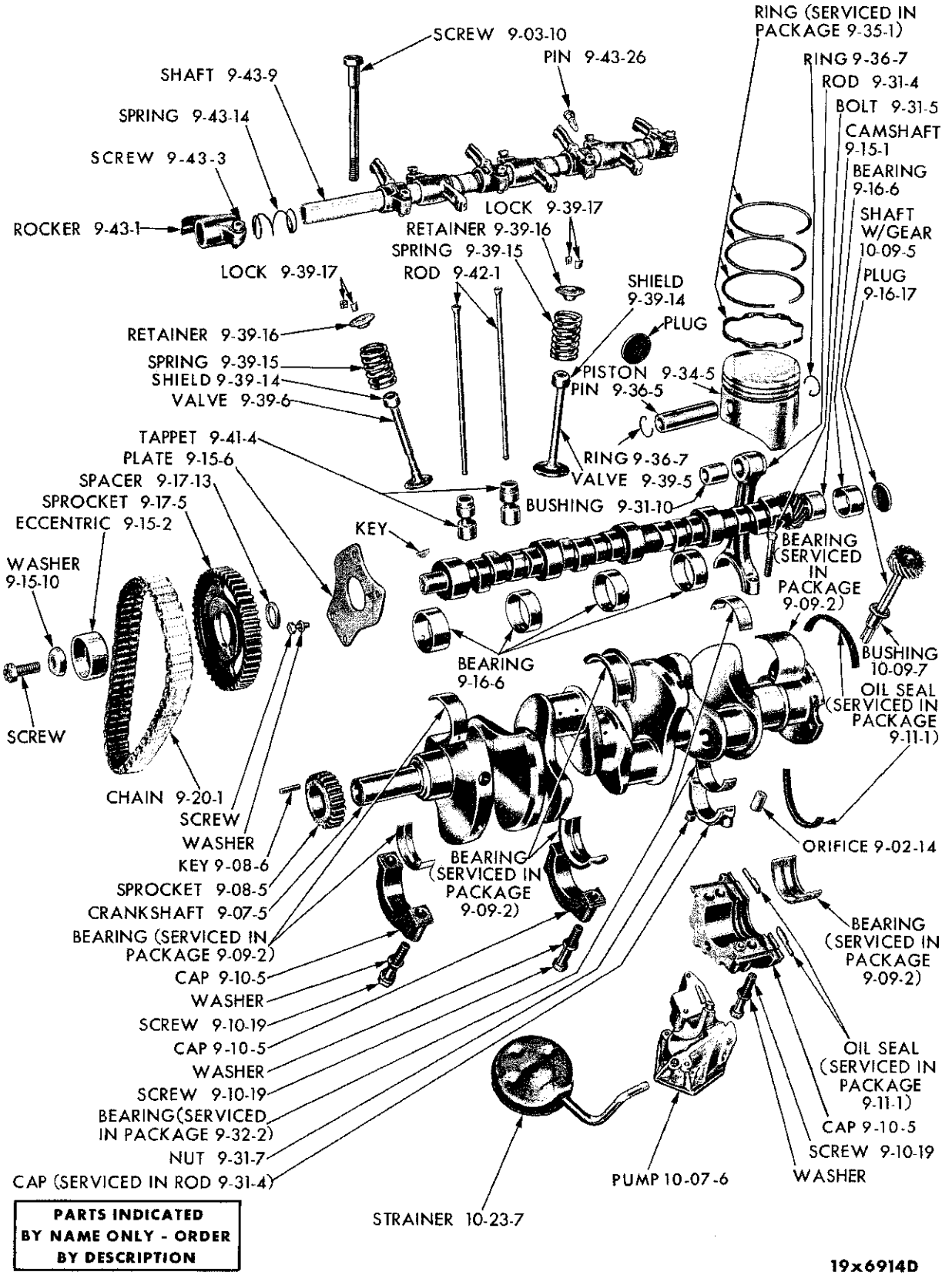

ENGINE INTERNAL PARTS - V8 CYLINDER ("A" ENGINE)

MyMopar.com

CODE	PART NAME AND DESCRIPTION	CYL.	PER CAR	VALIANT LANCER	PLYMOUTH DODGE	CHRYSLER IMPERIAL

NOTES

★ Indicates use as required.
⊟ Indicates parts not listed in any previous parts book.

Printed in U.S.A.
Prices and specifications subject to change without notice.
May 1, 1962.

MyMopar.com

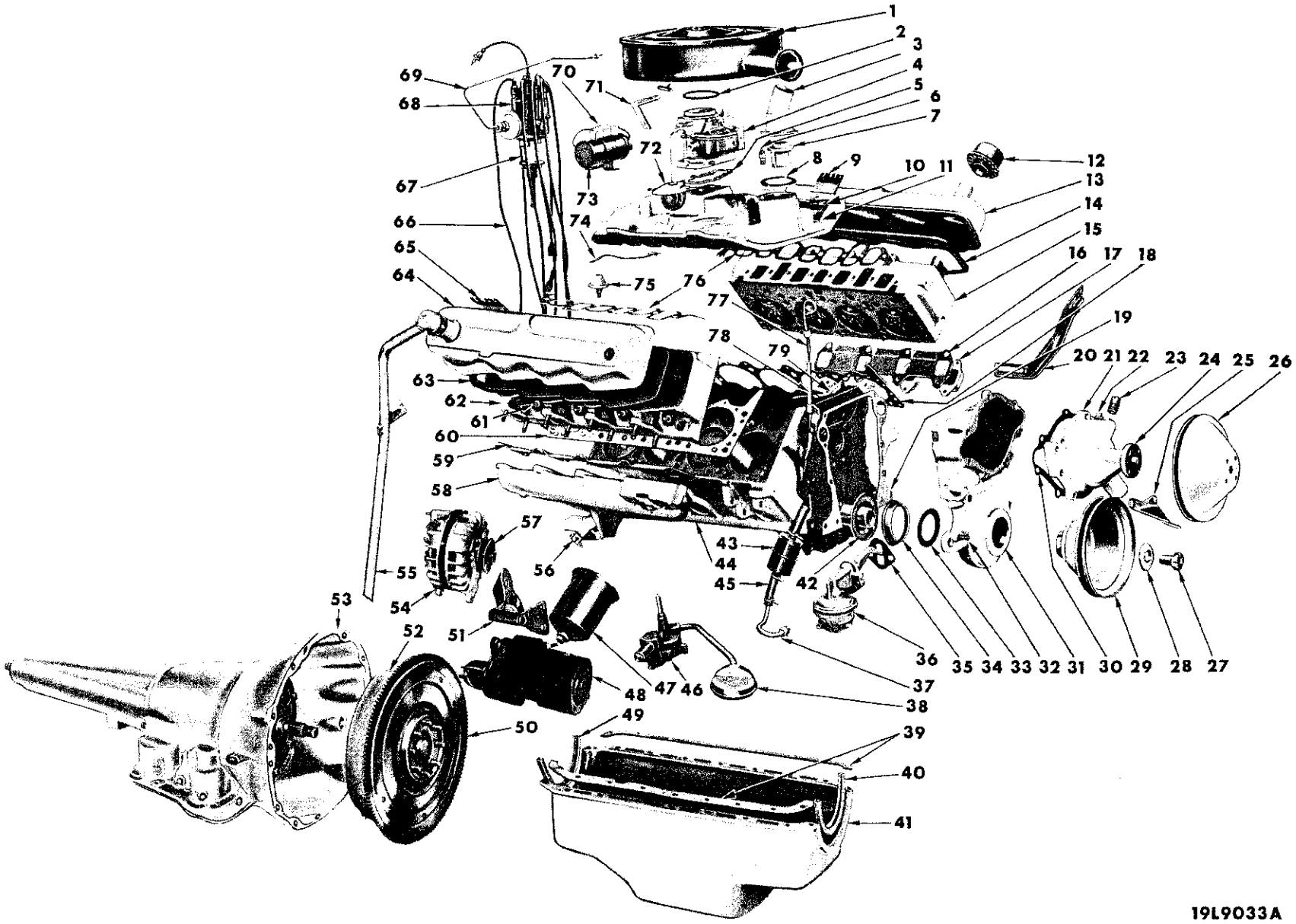

ENGINE EXTERNAL PARTS - V8 CYLINDER ("A" ENGINE)

MyMopar.com

ENGINE EXTERNAL PARTS - V8 CYLINDER ("A" ENGINE)

Ref. No.	Name	Part Type Code
1	Air Cleaner	14-29-2
2	Gasket	14-29-5
3	Elbow	9-05-5
4	Carburetor	14-30-1
5	Gasket	14-30-2
6	Sending Unit	8-37-155
7	Thermostat	7-41-4
8	Gasket	9-05-6
9	Bracket	8-36-4
10	Nipple	7-48-22
11	Manifold	9-48-6
12	Air Cleaner	10-01-21
13	Cover	9-03-28
14	Gasket	9-03-29
15	Head	9-03-4
16	Gasket	9-50-5
17	Manifold	9-48-6
18	Gasket	9-03-5
19	Gasket	9-23-17
20	Strap	8-28-15
21	Pump Package	7-42-1
22	Plug	
23	Nipple	7-48-22
24	Hub	7-05-1
25	Indicator	9-23-40
26	Pulley	7-06-14
27	Screw	9-07-8
28	Washer	9-07-22
29	Pulley	7-06-1
30	Gasket	7-44-3
31	Cover	9-23-5
32	Screw	
33	Gasket (Serviced in 9-23-18)	
34	Oil Seal	9-23-18
35	Gasket	14-74-1
36	Pump	14-73-2
37	Tube	14-89-2
38	Strainer	10-23-7
39	Gasket (Serviced in 10-24-1)	
40	Gasket (Serviced in 10-24-1)	
41	Pan	10-24-4
42	Oil Slinger	9-07-17
43	Filter	14-67-1
44	Block (Serviced in 9-01-24)	
45	Hose	14-67-2
46	Pump	10-07-6
47	Shell	10-26-14
48	Starting Motor	8-52-4
49	Gasket (Serviced in 10-24-1)	
50	Gear	9-45-2
51	Bracket	8-28-36
52	Torque Converter	9-46-4
53	Housing	21-03-1
54	Alternator	8-28-3
55	Pipe	10-02-15
56	Shield	9-58-12
57	Pulley	8-28-297
58	Manifold	9-48-6
59	Gasket	9-50-5
60	Gasket	9-03-5
61	Plug	8-36-114
62	Head	9-03-4
63	Gasket	9-03-29
64	Cover	9-03-28
65	Bracket	8-36-4
66	Cable	8-36-1
67	Retainer	8-27-4
68	Distributor	8-27-1
69	Tube	8-27-320
70	Resistor	8-35-22
71	Bracket	14-06-10
72	Choke, w/Rod	14-39-45
73	Coil	8-35-4
74	Gasket (Serviced in 9-50-1)	
75	Switch	8-53-327
76	Gasket (Serviced in 9-50-1)	
77	Indicator	10-03-4
78	Tube	10-03-7
79	Gasket (Serviced in 9-50-1)	

PARTS INDICATED BY NAME ONLY - ORDER BY DESCRIPTION

MyMopar.com

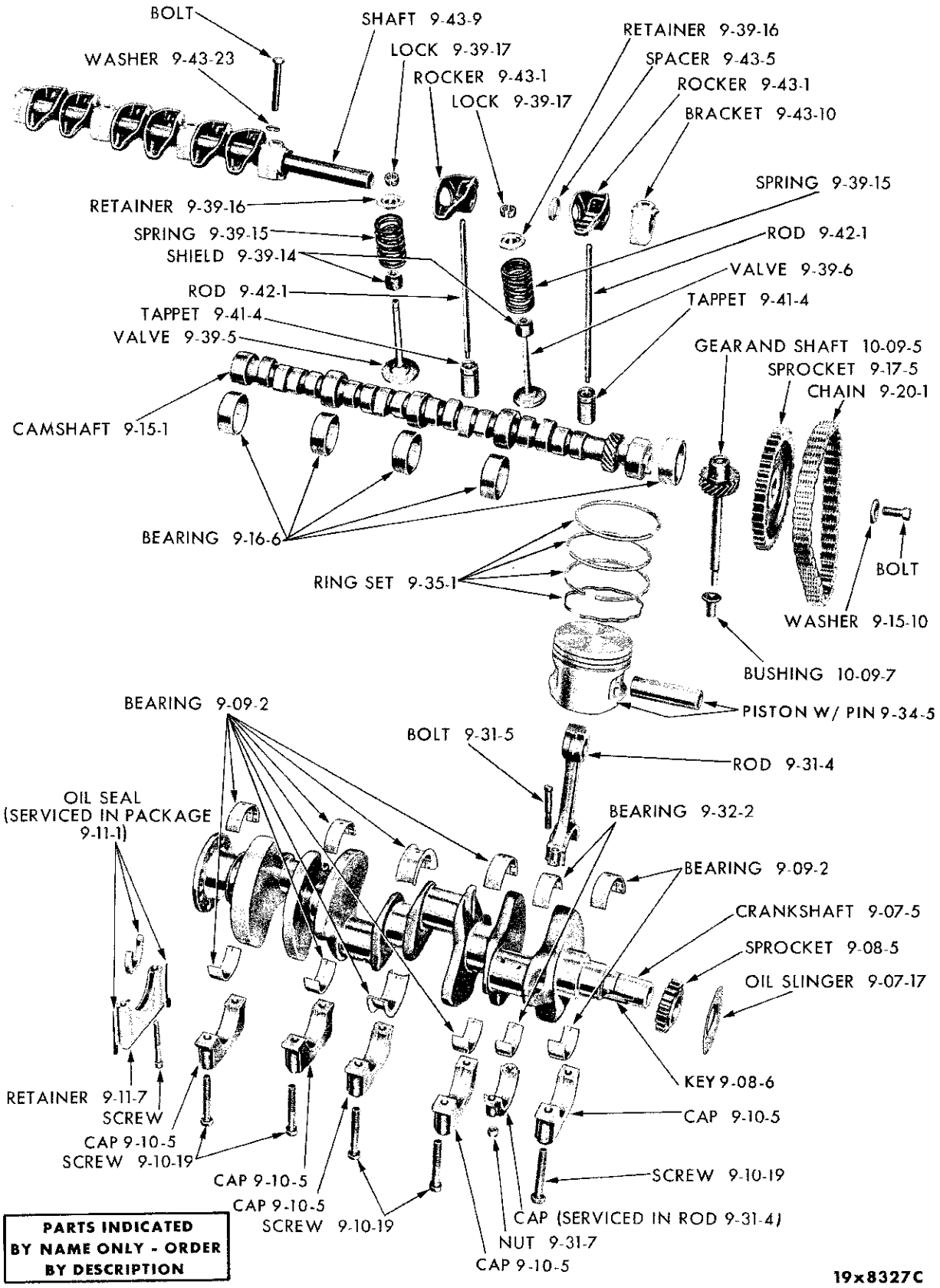

ENGINE INTERNAL PARTS - V8 CYLINDER ("B" ENGINE)

MyMopar.com

CODE	PART NAME AND DESCRIPTION	CYL.	PER CAR	VALIANT LANCER	PLYMOUTH DODGE	CHRYSLER IMPERIAL

NOTES

★ Indicates use as required.
⊟ Indicates parts not listed in any previous parts book.

Printed in U.S.A.
Prices and specifications subject to change without notice.
May 1, 1962.

MyMopar.com

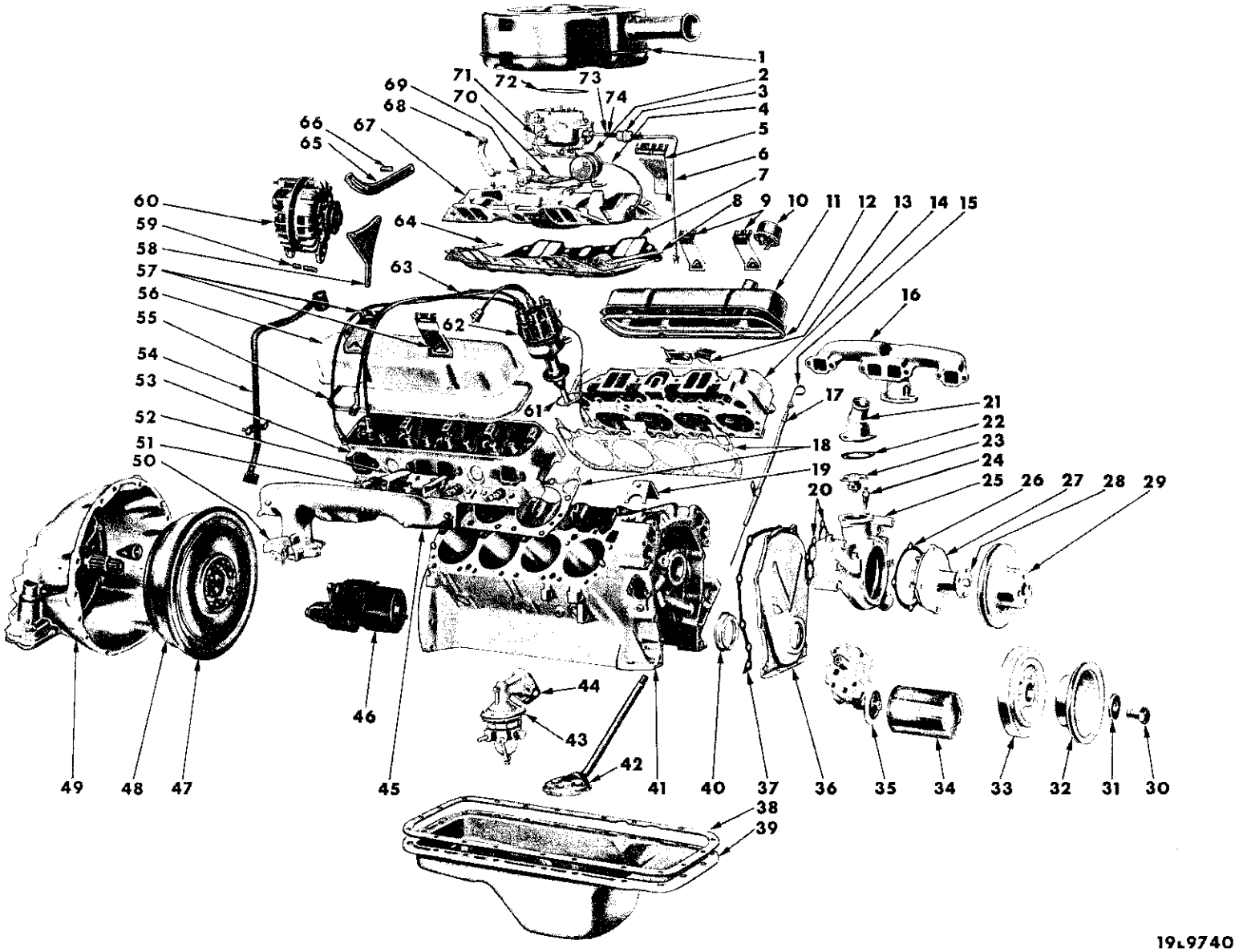

ENGINE EXTERNAL PARTS - V8 CYLINDER ("B" ENGINE)

MyMopar.com

ENGINE EXTERNAL PARTS - V8 CYLINDER ("B" ENGINE)

Ref. No.	Name	Part Type Code
1	Air Cleaner	14-29-2
2	Coil	8-35-4
3	Filter	14-67-1
4	Tube	8-27-320
5	Bracket	8-36-4
6	Tube	14-85-1
7	Gasket	9-50-6
8	Reinforcement	9-48-27
9	Bracket	8-36-4
10	Air Cleaner	10-01-21
11	Cover	9-03-28
12	Gasket	9-03-29
13	Shield	8-36-124
14	Head	9-03-4
15	Indicator	10-03-4
16	Manifold	9-48-6
17	Tube	10-03-7
18	Gasket	9-03-5
19	Clamp	8-27-26
20	Gasket	7-44-4
21	Elbow	9-05-5
22	Gasket	9-05-6
23	Thermostat	7-41-4
24	Sending Unit	8-37-155
25	Housing	7-43-1
26	Gasket	7-44-3
27	Pump Package	7-42-1
28	Hub	7-05-1
29	Pulley	7-06-14
30	Screw	9-07-8
31	Washer	9-07-22
32	Pulley	7-06-1
33	Damper	9-13-5
34	Oil Filter	10-26-6
35	Pump	10-07-6
36	Cover	9-23-5
37	Gasket	9-23-17
38	Gasket	10-24-8
39	Pan	10-24-4
40	Oil Seal	9-23-18
41	Block (Serviced in short engine 9-01-24)	
42	Strainer	10-23-7
43	Pump Package	14-73-1
44	Gasket	14-74-1
45	Manifold	9-48-6
46	Starter	8-52-4
47	Gear	9-45-2
48	Torque Converter	9-46-4
49	Case	21-02-1
50	Shield	9-58-12
51	Spark Plug	8-36-114
52	Shield	8-36-124
53	Head	9-03-4
54	Pipe	10-02-15
55	Gasket	9-03-29
56	Cover	9-03-28
57	Bracket	8-36-4
58	Bracket	8-28-36
59	Spacer	8-28-292
60	Alternator	8-28-3
61	Retainer	8-27-4
62	Distributor	8-27-1
63	Cable Set	8-36-1
64	Reinforcement	9-48-27
65	Strap	8-28-15
66	Spacer	8-28-14
67	Manifold	9-48-7
68	Bracket	14-29-12
69	Choke	14-39-45
70	Gasket	14-30-2
71	Carburetor	14-30-1
72	Gasket	14-29-5
73	Clamp	
74	Hose	14-67-2

PARTS INDICATED BY NAME ONLY - ORDER BY DESCRIPTION

MyMopar.com

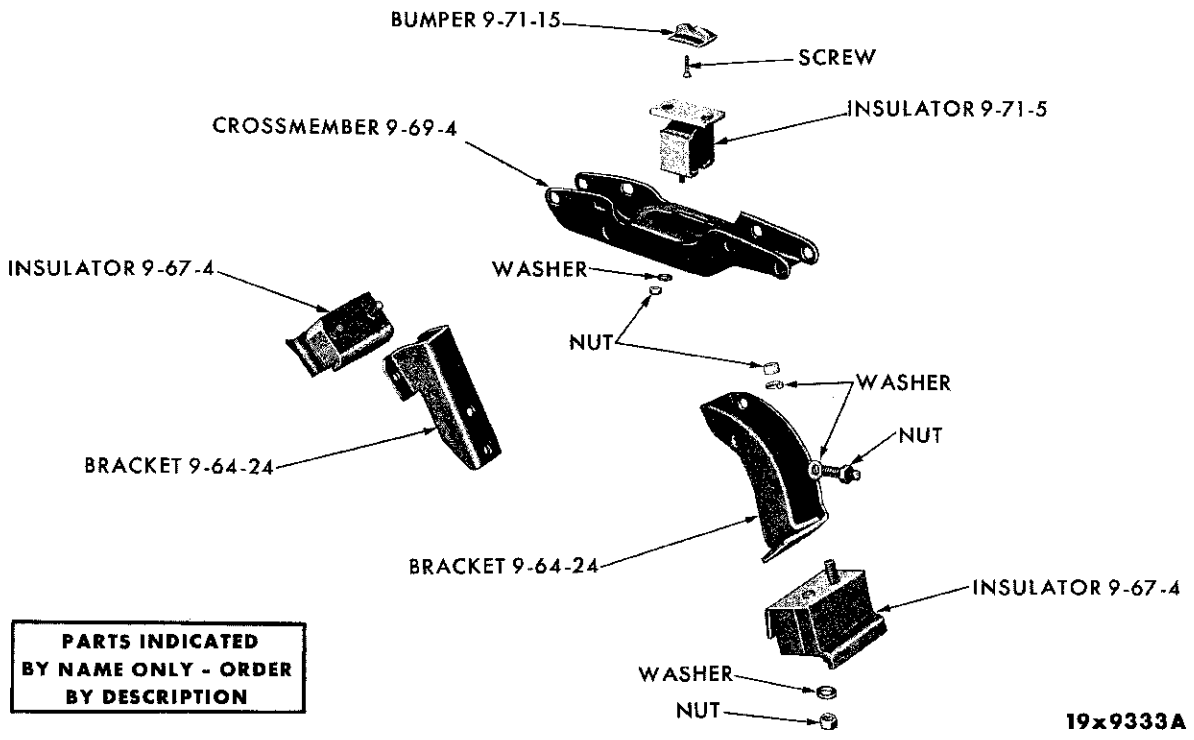

PARTS INDICATED BY NAME ONLY - ORDER BY DESCRIPTION

ENGINE MOUNTINGS (6 CYLINDER) - VALIANT SV1 AND LANCER SL1

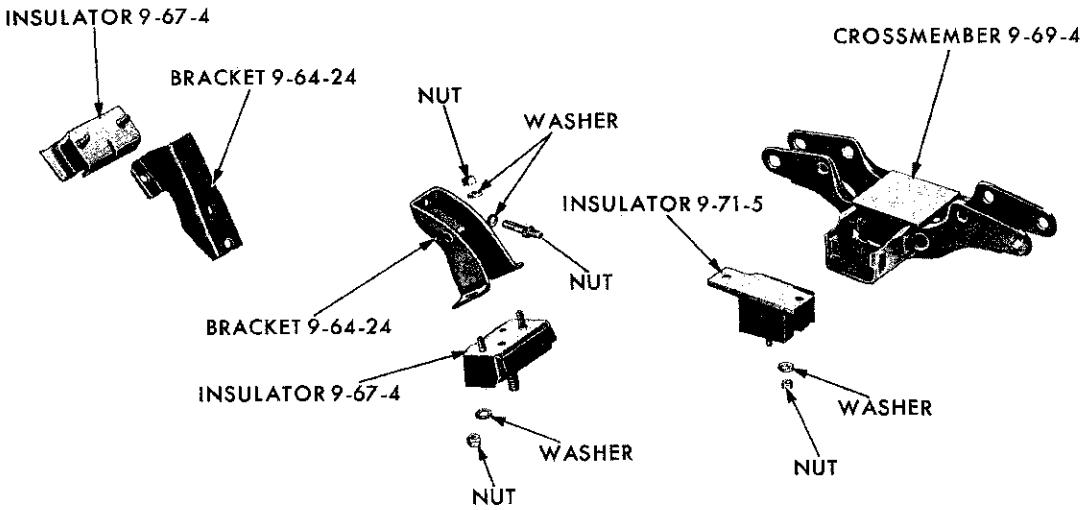

PARTS INDICATED BY NAME ONLY - ORDER BY DESCRIPTION

ENGINE MOUNTINGS (6 CYLINDER) - PLYMOUTH SP1 AND DODGE SD1

MyMopar.com

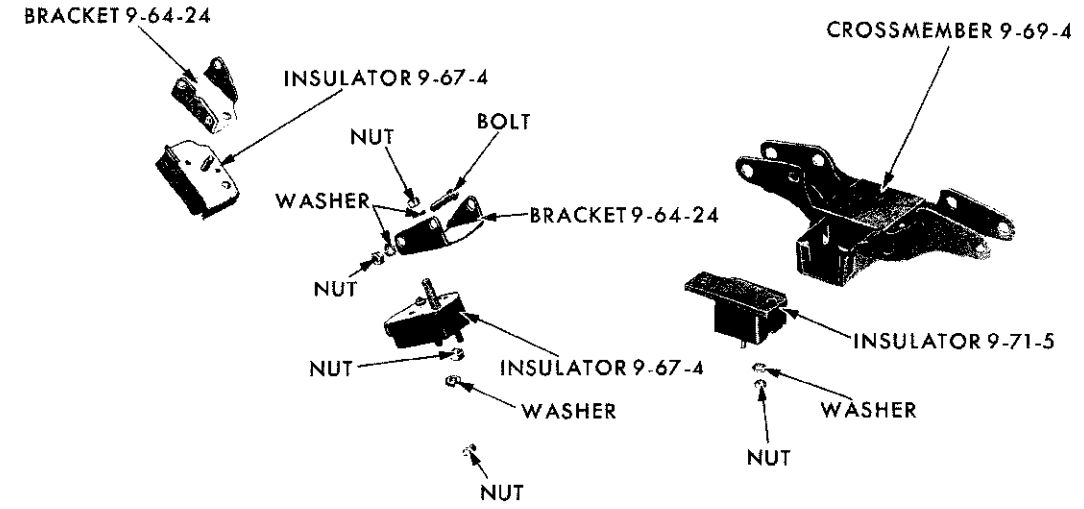

PARTS INDICATED BY NAME ONLY - ORDER BY DESCRIPTION

19x9337A

ENGINE MOUNTINGS (V8 CYLINDER) - PLYMOUTH SP2 AND DODGE SD2 (HIGH PERFORMANCE)

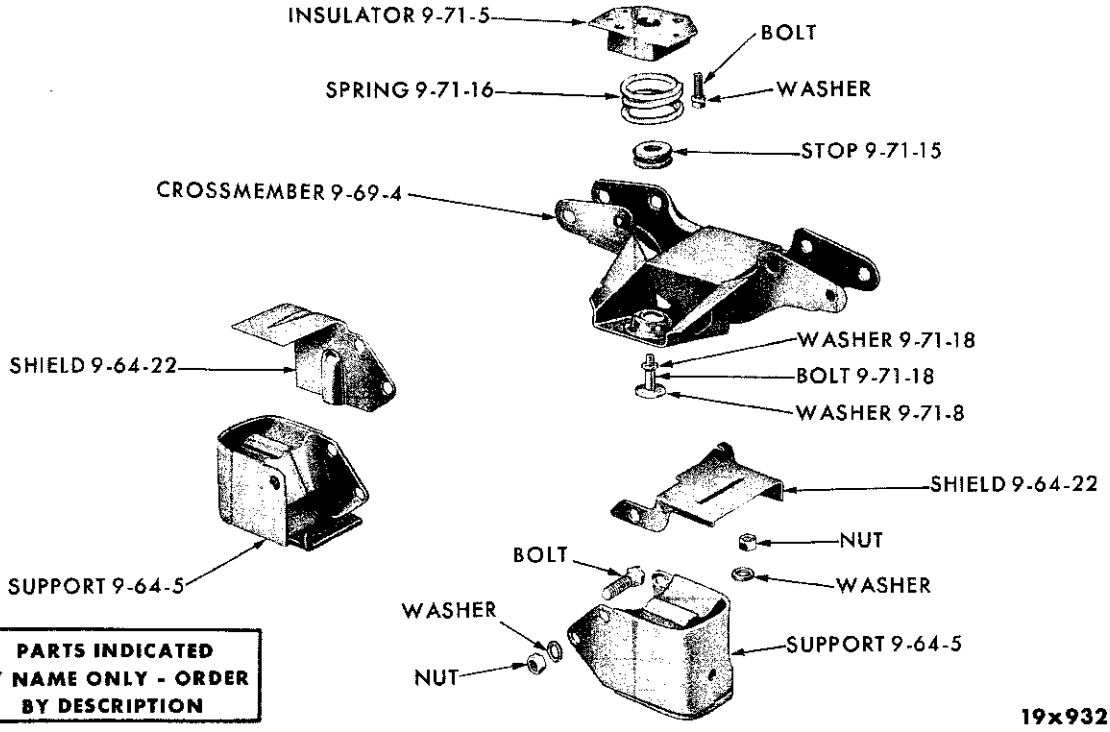

PARTS INDICATED BY NAME ONLY - ORDER BY DESCRIPTION

19x9321A

ENGINE MOUNTINGS (V8 CYLINDER) - "A" ENGINE

MyMopar.com

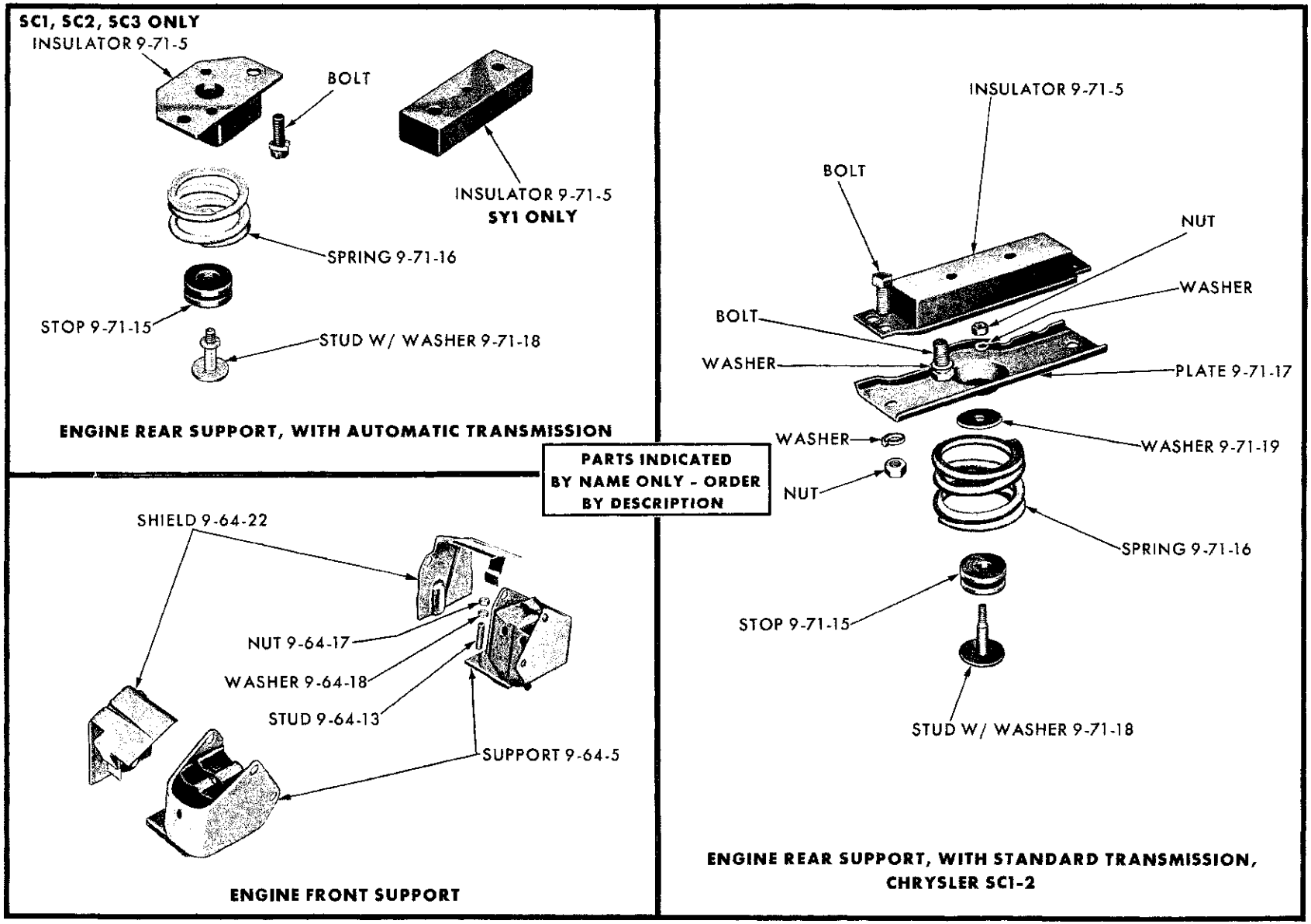

19x9334

ENGINE MOUNTINGS - CHRYSLER SC1-2-3 AND IMPERIAL SY1

MyMopar.com

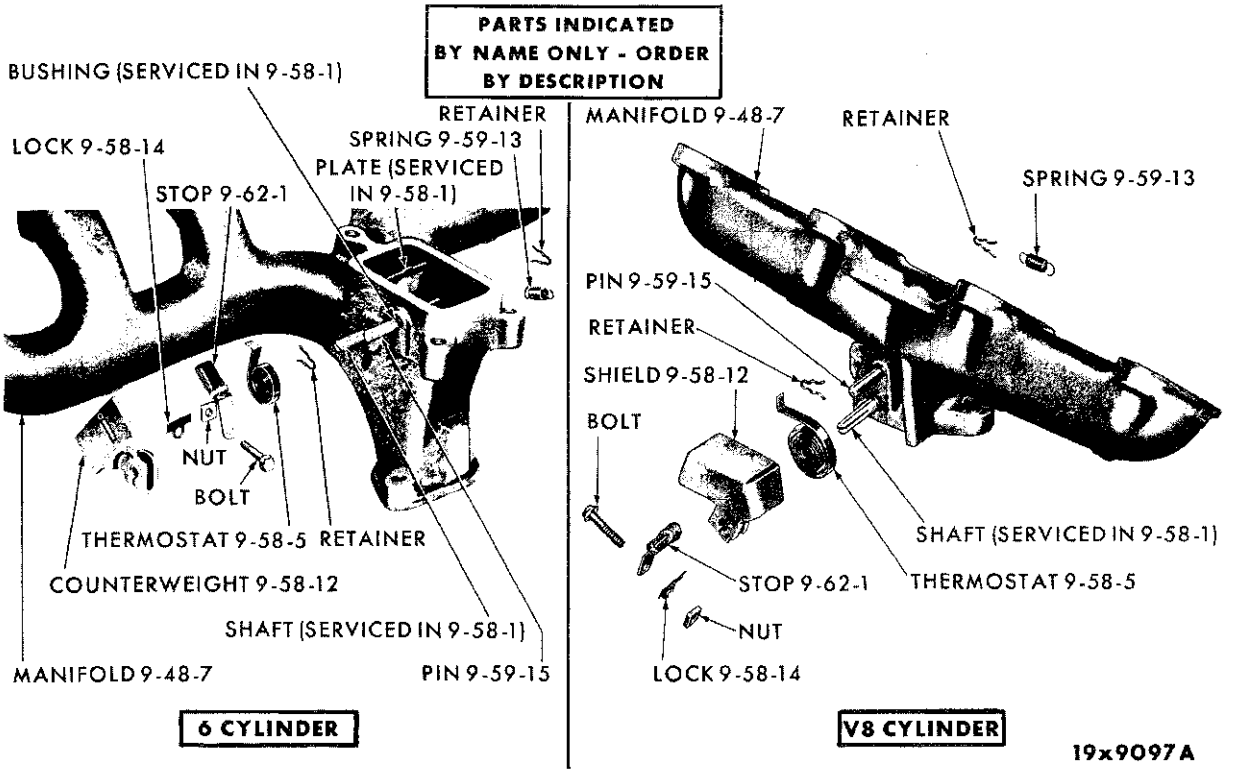

MANIFOLD HEAT CONTROLS

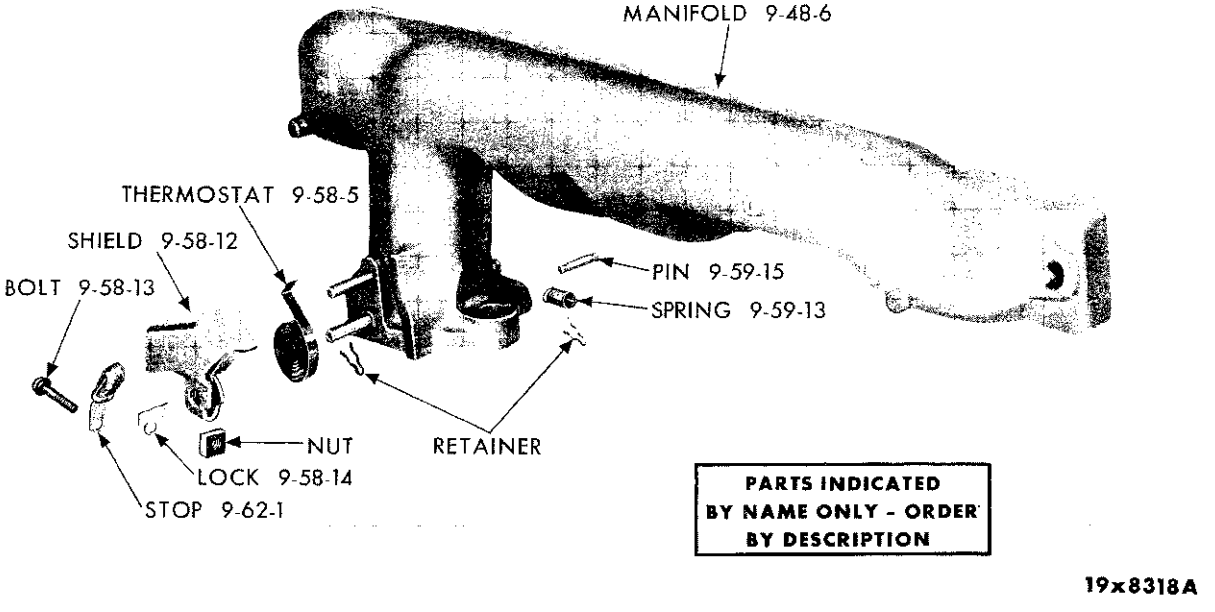

MANIFOLD HEAT CONTROLS (V8 CYLINDER) - "B" ENGINE

MyMopar.com

CODE	PART NAME AND DESCRIPTION	CYL.	PER CAR	VALIANT LANCER	PLYMOUTH DODGE	CHRYSLER IMPERIAL

NOTES

MyMopar.com

NOTE: The following symbols are used in connection with engine numbers:
Engine numbers without symbols indicate "Standard Cylinders and Crankshaft Bearings."

The Letter "A" immediately following the engine number indicates Bore .020" (.508 MM.) Larger than Standard.
The Letter "B" immediately following the engine number indicates Main and Connecting Rod Bearings .010" (.245 MM.) Smaller than Standard.
The Letters "AB" immediately following the engine number indicate Cylinder Bore .020" (.508 MM.).

Larger than Standard and the Main and Connecting Rod Bearings .010" (.254 MM.) Smaller than Standard.

The Letters in the circular pads at either end of the engine number are for the use of factory inspectors only and should not be connected with the engine number.

Always mention Serial Numbers when ordering major assemblies.

CODE	PART NAME AND DESCRIPTION	CYL.	PER CAR	VALIANT LANCER	PLYMOUTH DODGE	CHRYSLER IMPERIAL
9-01-0	**ENGINE ASSEMBLY**					
9-01-5	GASKET SET	6	1	2196 045	2196 045	
	w/Alum. Eng.	6	1	2240 628		
	318 cu. in. Eng.	8	1	---- ---	2196 087	
	SP2 w/361 cu. in. Eng., SD2 w/361 cu. in. Eng., SD3, SC1, SC2 w/383 cu. in. Eng.	8	1	---- ---	2279 976	2279 976
	SC2 w/413 cu. in. Eng., SC3, SY1	8	1	---- ---	---- ---	1879 702
	SP2, SD2, w/413 cu. in. Eng.	8	1	---- ---	⊟2421 364	

NOTE: Short Engine Assemblies Consist of: The Cylinder Block with Pistons and Rings, Crankshaft and Bearings, Connecting Rods and Bearings, Camshaft and Bearings, Camshaft Thrust Plate, Camshaft and Crankshaft Sprockets and Timing Chain. On the 8 Cylinder Short Engine Assemblies some of the above parts have been left off to obtain a greater interchangeability.

9-01-24	SHORT ENGINE, w/170 cu. in. Eng.	6	1	2206 136		
	w/225 cu. in. Alum. Eng.	6	1	2264 401		
	6.9 to 1 Compression Ratio, L.H.D. Exp.	6	1	2206 138		
	w/225 cu. in. C.I. Eng., Exp.	6	1	2206 132		
	w/225 cu. in. Cast Iron Eng.	6	1	*2206 132	*2206 132	
	Exp.	6	1	---- ---	2206 134	
	w/318 cu. in. Eng.	8	1	---- ---	2268 306	
	Exp., w/318 cu. in. Eng.	8	1	---- ---	2268 308	
	SP2 w/361 cu. in. Eng., SD2 w/361 cu. in. Eng., SD3, SC1 w/361 cu. in. Eng.	8	1	---- ---	2268 314	2268 314
	SP2, SD2, w/413 cu. in. Eng., w/11 to 1 Compression Ratio	8	1	---- ---	⊟2402 852	
	SP2, SD2, w/413 cu. in. Eng., w/13.5 to 1 Compression Ratio	8	1	---- ---	⊟2402 854	
	SC1 w/383 cu. in. Eng., SC2 w/383 cu. in. Eng.	8	1	---- ---	---- ---	2268 318
	SC2 w/413 cu. in. Eng., SC3, SY1	8	1	---- ---	---- ---	2268 310
	SC3, SY1 Exp.	8	1	---- ---	---- ---	2268 312
	SC1 Exp.	8	1	---- ---	---- ---	2268 316
9-02-0	**CYLINDER BLOCK**					
9-02-5	BLOCK, w/PISTON and RINGS	6	1	2202 866		
	w/225 cu. in. Alum. Eng.	6	1	2402 148		
	Low Compression LHD Export	6	1	2203 097		
9-02-7	DOWEL, Cylinder Block to Clutch Housing or Torque Converter Housing		2	1122 532	1122 532	1122 532
9-02-9	DOWEL, Cylinder Block to Bearing Cap w/225 cu. in. Alum. Eng.	6	4	2268 241		
	Cylinder Block to No. 5 Bearing Cap	8	1	---- ---	1408 853	
9-02-12	PLUG, Cylinder Block Oil Gallery, Front w/Alum. Eng.	6	1	2121 718		
	Rear w/Alum. Eng.	6	1	2129 351		

MyMopar.com

CODE	PART NAME AND DESCRIPTION	CYL.	PER CAR	VALIANT LANCER	PLYMOUTH DODGE	CHRYSLER IMPERIAL
9-02-0	**CYLINDER BLOCK - Cont'd**					
9-02-13	SEAL, Cylinder Block Oil Gallery Rear Plug w/Alum. Eng.	6	1	2128 962		
9-02-14	ORIFICE, Oil Line, w/318 cu. in. Eng.	8	1	---- ---	1821 557	
9-02-16	PLUG, Water Hole, w/C.I. Eng.	6	3	*2121 198	*2121 198	
	Core Hole, w/318 cu. in. Eng.	8	6	---- ---	*1821 721	
	Core Hole, except 318 cu. in. Eng.	8	6	---- ---	*2121 198	*2121 198
	Core Hole	8	1	---- ---	*2402 649	*2402 649
9-03-0	**CYLINDER HEAD**					
9-03-4	HEAD	6	1	2206 056	2206 056	
	w/318 cu. in. Eng. UP TO Eng. No. 45889	8	2	---- ---	2268 593	
	w/318 cu. in Eng. AFTER Eng. No. 45889	8	2	---- ---	2402 116	
	SP2 w/361 cu. in. Eng., SD2 w/361 cu. in. Eng., SD3	8	2	---- ---	2128 589	2128 589
	SP2, SD2, w/413 cu. in. Eng.	8	2	---- ---	⊟2402 358	
9-03-5	GASKET, w/C.I. Eng.	6	1	1947 578	1947 578	
	w/Alum. Eng.	6	1	2128 279		
	w/318 cu. in. Eng.	8	2	---- ---	*2268 441	
	SP2 w/361 cu. in. Eng., SD2 w/361 cu. in. Eng., SD3	8	2	---- ---	1851 579	1851 579
	SP2, SD2, w/413 cu. in. Eng.	8	2	---- ---	*1859 429	
9-03-10	SCREW, w/C.I. Eng.	6	14	1947 687	1947 687	
	w/Alum. Eng.	6	14	1947 686		
	Short, w/318 cu. in. Eng.	8	10	---- ---	1618 695	
	Long, w/318 cu. in. Eng.	8	10	---- ---	1618 696	
	Short, SP2 w/361 cu. in. Eng., SD2 w/361 Short, SP2, SD2, SD3, except 318 cu. in. Eng.	8	24	---- ---	*1739 605	*1739 605
	Long, SP2, SD2, SD3, except 318 cu. in. Eng.	8	10	---- ---	*1739 606	*1739 606
9-03-12	WASHER, Cylinder Head Screw, SP2, SD2, w/413 cu. in. Eng.	8	32	---- ---	⊟2402 351	
9-03-18	PLUG, Core Hole, SP2 w/361 cu. in. Eng., SD2 w/361 cu. in. Eng., SD3	8	4	---- ---	1551 067	1551 067
	SP2, SD2, w/413 cu. in. Eng.	8	4	---- ---	⊟2402 270	
9-03-28	COVER	6	1	2129 617	2129 617	
	w/318 cu. in. Eng., Rt.	8	1	---- ---	2202 812	
	w/318 cu. in. Eng., Lt.	8	1	---- ---	2128 405	
	SP2, SD2, SD3, except 318 cu. in. Eng.	8	2	---- ---	*2205 836	*2205 836
9-03-29	GASKET, Cover	6	1	2121 244	2121 244	
	w/318 cu. in. Eng.	8	2	---- ---	2128 407	
	SP2, SD2, SD3, except 318 cu. in. Eng.	8	2	---- ---	*1821 440	*1821 440
9-05-0	**CYLINDER HEAD WATER OUTLET ELBOW**					
9-05-5	ELBOW	6	1	2121 524	2121 524	
	w/o Air Conditioning	8	1	---- ---	1855 393	1855 393
	w/Air Conditioning	8	1	---- ---	1855 605	1855 605
9-05-6	GASKET	6	1	1947 671	1947 671	
		8	1	---- ---	50 082	50 082
9-07-0	**CRANKSHAFT**					
9-07-5	CRANKSHAFT, w/170 cu. in. Eng.	6	1	2264 173		
	w/225 cu. in. Eng.	6	1	2268 442	2268 442	
	w/318 cu. in. Eng.	8	1	---- ---	2268 119	
	w/361 cu. in. Eng. and w/383 cu. in. Eng.	8	1	---- ---	*2268 114	*2268 114

★ Indicates use as required. Numerals in parentheses ( ) refer to notes. Printed in U.S.A.
⊟ Indicates parts not listed in any previous parts book. Prices and specifications subject to change without notice.
March 8, 1963 Supersedes May 1, 1962. * Indicates change or addition.

MyMopar.com

CODE	PART NAME AND DESCRIPTION	CYL.	PER CAR	VALIANT LANCER	PLYMOUTH DODGE	CHRYSLER IMPERIAL
9-07-0	**CRANKSHAFT - Cont'd**					
9-07-5	CRANKSHAFT - Cont'd					
	SP2, SD2, w/413 cu. in. Eng.	8	1	---- ---	⊟2402 330	
	SC2 w/413 cu. in. Eng., SC3, SY1	8	1	---- ---	---- ---	2264 354
9-07-8	SCREW, w/Std. Trans.	8	1	---- ---	1821 414	
	w/Auto. Trans., w/Air Conditioning	8	1	---- ---	1821 177	
		8	1	---- ---	*1731 525	*1731 525
9-07-12	BUSHING, Crankshaft Transmission Drive Pinion Pilot, SC1, SC2 Std. Trans.		1	53 298	53 298	53 298
9-07-17	OIL SLINGER		1	1618 686	1618 686	1618 686
9-07-22	WASHER, Screw	8	1	---- ---	1855 561	1855 561
9-08-0	**CRANKSHAFT SPROCKET**					
9-08-5	SPROCKET	6	1	1737 621	1737 621	
	w/318 cu. in. Eng.	8	1	---- ---	1632 280	
	Except 318 cu. in. Eng.	8	1	---- ---	*1737 621	*1737 621
9-08-6	KEY		1	152 191	152 191	152 191

9-09-0 CRANKSHAFT BEARING PACKAGES

NOTE: When .001 thicker wall crankshaft main bearings are used for engines in production an identification mark is stamped on the machined surface of the crankshaft center counterweight for six cylinder engines and No. 3 counterweight for V8 cylinder engines. When the thicker wall crankshaft bearings are used the crankshaft will be marked M1, M2, M3, M4 or M5 depending on which journal has the .001 thicker wall bearing.

NOTE: Crankshaft Bearing Packages consist of one upper and one lower bearing.

9-09-2	BEARING PACKAGE, No. 1 Std.	6	1	2240 368	2240 368	
	No. 3 Std.	6	1	2240 372	2240 372	
	Nos. 2 and 4 Std.	6	2	2240 376	2240 376	
	No. 1 .001 U/S	6	1	2240 369	2240 369	
	No. 3 .001 U/S	6	1	2240 373	2240 373	
	Nos. 2 and 4 .001 U/S	6	2	2240 377	2240 377	
	No. 1 .002 U/S	6	1	2240 370	2240 370	
	No. 3 .002 U/S	6	1	2240 374	2240 374	
	Nos. 2 and 4 .002 U/S	6	2	2240 378	2240 378	
	No. 1 .003 U/S	6	1	2275 381	2275 381	
	No. 3 .003 U/S	6	1	2275 385	2275 385	
	Nos. 2 and 4 .003 U/S	6	2	2275 383	2275 383	
	No. 1 .010 U/S	6	1	2240 371	2240 371	
	No. 3 .010 U/S	6	1	2240 375	2240 375	
	Nos. 2 and 4 .010 U/S	6	2	2240 379	2240 379	
	No. 1 .012 U/S	6	1	2275 382	2275 382	
	No. 3 .012 U/S	6	1	2275 386	2275 386	
	Nos. 2 and 4 .012 U/S	6	2	2275 384	2275 384	
	Nos. 1, 2 and 4 Std. w/318 cu. in. Eng.	8	3	---- ---	2084 005	
	No. 3 Std. w/318 cu. in. Eng.	8	1	---- ---	1879 627	
	No. 5 Std. w/318 cu. in. Eng.	8	1	---- ---	1643 151	
	Nos. 1, 2 and 4 .001 U/S w/318 cu. in. Eng.	8	3	---- ---	2084 006	
	No. 3 .001 U/S w/318 cu. in. Eng.	8	1	---- ---	1879 628	
	No. 5 .001 U/S. w/318 cu. in. Eng.	8	1	---- ---	1643 152	
	Nos. 1, 2 and 4 .002 U/S w/318 cu. in. Eng.	8	3	---- ---	2084 007	
	No. 3 .002 U/S w/318 cu. in. Eng.	8	1	---- ---	1879 629	
	No. 5 .002 U/S w/318 cu. in. Eng.	8	1	---- ---	1643 153	
	Nos. 1, 2 and 4 .003 U/S w/318 cu. in. Eng.	8	3	---- ---	2275 387	

MyMopar.com

CODE	PART NAME AND DESCRIPTION	CYL.	PER CAR	VALIANT LANCER	PLYMOUTH DODGE	CHRYSLER IMPERIAL
9-09-0	**CRANKSHAFT BEARING PACKAGES - Cont'd**					
9-09-2	BEARING PACKAGE - Cont'd					
	No. 3 .003 U/S w/318 cu. in. Eng.	8	1	---- ---	2275 389	
	No. 5 .003 U/S w/318 cu. in. Eng.	8	1	---- ---	2275 390	
	Nos. 1, 2 and 4 .010 U/S w/318 cu. in. Eng.	8	3	---- ---	2084 008	
	No. 3 .010 U/S w/318 cu. in. Eng.	8	1	---- ---	1879 630	
	No. 5 .010 U/S w/318 cu. in. Eng.	8	1	---- ---	1643 155	
	Nos. 1, 2 and 4 .012 U/S w/318 cu. in. Eng.	8	3	---- ---	2275 388	
	No. 3 .012 U/S w/318 cu. in. Eng.	8	1	---- ---	2275 390	
	No. 5 .012 U/S w/318 cu. in. Eng.	8	1	---- ---	1643 156	
	No. 1 Std., SP2 w/361 cu. in. Eng., SD2 w/361 cu. in. Eng., SD3, SC1, SC2 w/383 cu. in. Eng.	8	1	---- ---	2084 810	2084 810
	Nos. 2, 4 and 5 Std., SP2 w/361 cu. in. Eng., SD2 w/361 cu. in. Eng., SD3, SC1, SC2 w/383 cu. in. Eng.	8	3	---- ---	2084 833	2084 833
	No. 3 Std., SP2 w/361 cu. in. Eng., SD2 w/361 cu. in. Eng., SD3, SC1, SC2 w/383 cu. in. Eng.	8	1	---- ---	1818 524	1818 524
	No. 1 .001 U/S, SP2 w/361 cu. in. Eng., SD2 w/361 cu. in. Eng., SD3, SC1, SC2 w/383 cu. in. Eng.	8	1	---- ---	2084 811	2084 811
	Nos. 2, 4 and 5 .001 U/S SP2 w/361 cu. in. Eng., SD2 w/361 cu. in. Eng., SD3, SC1, SC2 w/383 cu. in. Eng.	8	3	---- ---	2084 834	2084 834
	No. 3 .001 U/S, SP2 w/361 cu. in. Eng., SD2 w/361 cu. in. Eng., SD3, SC1, SC2 w/383 cu. in. Eng.	8	1	---- ---	1818 525	1818 525
	No. 1 .002 U/S, SP2 w/361 cu. in. Eng., SD2 w/361 cu. in. Eng., SD3, SC1, SC2 w/383 cu. in. Eng.	8	1	---- ---	2084 812	2084 812
	Nos. 2, 4 and 5 .002 U/S, SP2 w/361 cu. in. Eng., SD2 w/361 cu. in. Eng., SD3, SC1, SC2 w/383 cu. in. Eng.	8	3	---- ---	2084 835	2084 835
	No. 3 .002 U/S, SP2 w/361 cu. in. Eng., SD2 w/361 cu. in. Eng., SD3, SC1, SC2 w/383 cu. in. Eng.	8	1	---- ---	1818 526	1818 526
	No. 1 .003 U/S, SP2 w/361 cu. in. Eng., SD2 w/361 cu. in. Eng., SD3, SC1, SC2 w/383 cu. in. Eng.	8	1	---- ---	2275 391	2275 391
	Nos. 2, 4 and 5 .003 U/S, SP2 w/361 cu. in. Eng., SD2 w/361 cu. in. Eng., SD3, SC1, SC2 w/383 cu. in. Eng.	8	3	---- ---	2275 393	2275 393
	No. 3 .003 U/S, SP2 w/361 cu. in. Eng., SD2 w/361 cu. in. Eng., SD3, SC1, SC2 w/383 cu. in. Eng.	8	1	---- ---	1818 527	1818 527
	No. 1 .010 U/S, SP2 w/361 cu. in. Eng., SD2 w/361 cu. in. Eng., SD3, SC1, SC2 w/383 cu. in. Eng.	8	1	---- ---	2084 813	2084 813
	Nos. 2, 4 and 5 .010 U/S, SP2 w/361 cu. in. Eng., SD2 w/361 cu. in. Eng., SD3, SC1, SC2 w/383 cu. in. Eng.	8	3	---- ---	2084 836	2084 836
	No. 3 .010 U/S, SP2 w/361 cu. in. Eng., SD2 w/361 cu. in. Eng., SD3, SC1, SC2 w/383 cu. in. Eng.	8	1	---- ---	1818 528	1818 528
	No. 1 .012 U/S, SP2 w/361 cu. in. Eng., SD2 w/361 cu. in. Eng., SD3, SC1, SC2 w/383 cu. in. Eng.	8	1	---- ---	2275 392	2275 392
	Nos. 2, 4 and 5 .012 U/S, SP2 w/361 cu. in. Eng., SD2 w/361 cu. in. Eng., SD3, SC1, SC2 w/383 cu. in. Eng.	8	3	---- ---	2275 394	2275 394
	No. 3 .012 U/S, SP2 w/361 cu. in. Eng., SD2 w/361 cu. in. Eng., SD3, SC1, SC2 w/383 cu. in. Eng.	8	1	---- ---	1818 529	1818 529
	No. 1 Std. w/413 cu. in. Eng.	8	1	---- ---	*2448 379	
	Nos. 2, 4 and 5 Std. w/413 cu. in. Eng.	8	3	---- ---	*2448 380	
	No. 3 Std. w/413 cu. in. Eng.	8	1	---- ---	*2448 381	
	No. 1 Std., SC2 w/413 cu. in. Eng., SC3, SY1	8	1	---- ---	---- ---	2084 814
	Nos. 2, 4 and 5 Std., SC2 w/413 cu. in. Eng., SC3, SY1	8	3	---- ---	---- ---	2084 829
	No. 3 Std., SC2 w/413 cu. in. Eng., SC3, SY1	8	1	---- ---	---- ---	1879 378
	No. 1 .001 U/S, SC2 w/413 cu. in. Eng., SC3, SY1	8	1	---- ---	---- ---	2084 815

MyMopar.com

CODE	PART NAME AND DESCRIPTION	CYL.	PER CAR	VALIANT LANCER	PLYMOUTH DODGE	CHRYSLER IMPERIAL
9-09-0	**CRANKSHAFT BEARING PACKAGES - Cont'd**					
9-09-2	BEARING PACKAGE - Cont'd					
	Nos. 2, 4 and 5 .001 U/S, SC2 w/413 cu. in. Eng., SC3, SY1	8	3	---- ---	---- ---	2084 830
	No. 3 .001 U/S, SC2 w/413 cu. in. Eng., SC3, SY1	8	1	---- ---	---- ---	1879 379
	No. 1 .002 U/S, SC2 w/413 cu. in. Eng., SC3, SY1	8	1	---- ---	---- ---	2084 816
	Nos. 2, 4 and 5 .002 U/S, SC2 w/413 cu. in. Eng., SC3, SY1	8	3	---- ---	---- ---	2084 831
	No. 3 .002 U/S, SC2 w/413 cu. in. Eng., SC3, SY1	8	1	---- ---	---- ---	1879 380
	No. 1 .003 U/S, SC2 w/413 cu. in. Eng., SC3, SY1.	8	1	---- ---	---- ---	2275 395
	Nos. 2, 4 and 5 .003 U/S, SC2 w/413 cu. in. Eng., SC3, SY1	8	3	---- ---	---- ---	2275 397
	No. 3 .003 U/S, SC2 w/413 cu. in. Eng., SC3, SY1	8	1	---- ---	---- ---	1879 381
	No. 1 .010 U/S, SC2 w/413 cu. in. Eng., SC3, SY1	8	1	---- ---	---- ---	2084 817
	Nos. 2, 4 and 5 .010 U/S, SC2 w/413 cu. in. Eng., SC3, SY1	8	3	---- ---	---- ---	2084 832
	No. 3 .010 U/S, SC2 w/413 cu. in. Eng., SC3, SY1.	8	1	---- ---	---- ---	1879 382
	No. 1 .012 U/S, SC2 w/413 cu. in. Eng., SC3, SY1.	8	1	---- ---	---- ---	2275 396
	Nos. 2, 4 and 5 .012 U/S, SC2 w/413 cu. in. Eng., SC3, SY1	8	3	---- ---	---- ---	2275 398
	No. 3 .012 U/S, SC2 w/413 cu. in. Eng., SC3, SY1	8	1	---- ---	---- ---	1879 383
9-10-0	**CRANKSHAFT BEARING CAP**					
9-10-2	OIL SEAL PACKAGE, Crankshaft Bearing No. 5 Cap w/318 cu. in. Eng.	8	1	---- ---	1326 091	
9-10-5	SET, Crankshaft Bearing Cap, Complete, Nos. 1, 2, 3 and 4 w/225 Alum. Eng.	6	1	2298 511		
	CAP Nos. 1 and 2 w/C.I. Eng.	6	2	2084 403	2084 403	
	CAP No. 3 w/C.I. Eng.	6	1	2084 405	2084 405	
	CAP No. 4 w/C.I. Eng.	6	1	2084 404	2084 404	
	CAP Nos. 1, 2 and 4 w/318 cu. in. Eng.	8	3	---- ---	1632 519	
	CAP No. 3 w/318 cu. in. Eng.	8	1	---- ---	1632 520	
	CAP No. 5 w/318 cu. in. Eng.	8	1	---- ---	2275 446	
	CAP Nos. 1, 2 and 4, w/361 cu. in. Eng. and w/383 cu. in. Eng.	8	3	---- ---	*1852 914	*1852 914
	CAP No. 3, w/361 cu. in. Eng. and w/383 cu. in. Eng.	8	1	---- ---	*1852 915	*1852 915
	CAP No. 5, w/361 cu. in. Eng. and w/383 cu. in. Eng.	8	1	---- ---	*2206 315	*2206 315
	CAP Nos. 1, 2 and 4, w/413 cu. in. Eng.	8	3	---- ---	*1852 910	*1852 910
	CAP No. 3, w/413 cu. in. Eng.	8	1	---- ---	*1852 911	*1852 911
	CAP No. 5, w/413 cu. in. Eng.	8	1	---- ---	*2206 316	*2206 316
9-10-19	SCREW, w/225 cu. in. Alum. Eng.	6	8	2268 240		
		6	8	1408 867	1408 867	
		8	10	---- ---	1408 867	1408 867
9-11-0	**CRANKSHAFT REAR BEARING OIL SEAL**					
9-11-1	OIL SEAL PACKAGE, w/170 cu. in. Eng.	6	1	2084 411	2084 411	
	w/225 cu. in. Alum. Eng.	6	1	2240 650		
	w/RETAINER, w/225 cu. in. Alum. Eng.	6	1	2240 651		
	w/318 cu. in. Eng.	8	1	---- ---	1326 093	
	SP2, SD2, SD3, except 318 cu. in. Eng.	8	1	---- ---	*2275 365	*2275 365
9-11-7	RETAINER	6	1	1947 557	1947 557	
	SP2, SD2, SD3, except 318 cu. in. Eng.	8	1	---- ---	*1945 473	*1945 473

★ Indicates use as required. Numerals in parentheses ( ) refer to notes. Printed in U.S.A.
⊟ Indicates parts not listed in any previous parts book. Prices and specifications subject to change without notice.
* Indicates change or addition.

March 8, 1963 Supersedes May 1, 1962.

MyMopar.com

CODE	PART NAME AND DESCRIPTION	CYL.	PER CAR	VALIANT LANCER	PLYMOUTH DODGE	CHRYSLER IMPERIAL
9-11-0	**CRANKSHAFT REAR BEARING OIL SEAL - Cont'd**					
9-11-8	SCREW, Retainer	6	2	455 866	455 866	
9-13-0	**CRANKSHAFT VIBRATION DAMPER**					
9-13-5	DAMPER	6	1	2205 859	2205 859	
	w/Std. Trans., w/318 cu. in. Eng.	8	1	---- ---	1947 235	
	w/Automatic Trans., w/318 cu. in. Eng.	8	1	---- ---	2402 090	
	SP2, SD2, SD3, except 318 cu. in. Eng.	8	1	---- ---	*2275 897	*2275 897
9-15-0	**CAMSHAFT**					
9-15-1	CAMSHAFT	6	1	2264 105	2264 105	
	w/318 cu. in. Eng. UP TO Eng. No. S318-83038	8	1	---- ---	2268 464	
	w/318 cu. in. Eng. AFTER Eng. No. S318-83038	8	1	---- ---	2268 990	
	Power Package w/318 cu. in. Eng. UP TO Eng. No. S318-89994	8	1	---- ---	1944 712	
	Power Package w/318 cu. in. Eng. AFTER Eng. No. S318-89994	8	1	---- ---	2268 991	
	SP2 w/361 cu. in. Eng., SD2 w/361 cu. in. Eng., SC1 w/383 cu. in. Eng.	8	1	---- ---	2129 203	2129 203
	SP2, SD2, w/413 cu. in. Eng.	8	1	---- ---	⊟2402 293	
	CAMSHAFT, w/VALVE TAPPET, PACKAGE SP2, SD2, w/413 cu. in. Eng.	8	1	---- ---	⊟2448 774	
	SD3, SC1 w/361 cu. in. Eng., SC2 w/383 cu. in. Eng., SC2 w/413 cu. in. Eng., w/1 Four Barrel Carburetor, SC3, SY1	8	1	---- ---	2268 405	2268 405
	SC2 w/413 cu. in. Eng., w/2 Four Barrel Carburetors	8	1	---- ---	---- ---	2206 465
9-15-2	ECCENTRIC, w/318 cu. in. Eng.	8	1	---- ---	1618 718	
9-15-6	PLATE, Sprocket Thrust w/318 cu. in. Eng.	8	1	---- ---	1946 992	
9-15-10	WASHER, Sprocket Retaining Screw	6	1	1739 607	1739 607	
	w/318 cu. in. Eng.	8	1	---- ---	1618 732	
	SP2, SD2, SD3, except 3/8 cu. in. Eng.	8	1	---- ---	*1739 607	*1739 607
9-16-0	**CAMSHAFT BEARING**					
9-16-6	BEARING, No. 1 w/C.I. Eng.	6	1	2121 725	2121 725	
	No. 2 w/C.I. Eng.	6	1	1821 772	1821 772	
	No. 3 w/C.I. Eng.	6	1	2121 726	2121 726	
	No. 4 w/C.I. Eng.	6	1	2121 727	2121 727	
	No. 1 w/318 cu. in. Eng.	8	1	---- ---	1632 522	
	No. 2 w/318 cu. in. Eng.	8	1	---- ---	1632 523	
	No. 3 w/318 cu. in. Eng.	8	1	---- ---	1632 524	
	No. 4 w/318 cu. in. Eng.	8	1	---- ---	1632 525	
	No. 5 w/318 cu. in. Eng.	8	1	---- ---	1632 526	
	No. 1, except 318 cu. in. Eng.	8	1	---- ---	*1821 771	*1821 771
	No. 2, except 318 cu. in. Eng.	8	1	---- ---	*1821 772	*1821 772
	No. 3, except 318 cu. in. Eng.	8	1	---- ---	*1821 773	*1821 773
	No. 4, except 318 cu. in. Eng.	8	1	---- ---	*1821 774	*1821 774
	No. 5, except 318 cu. in. Eng.	8	1	---- ---	*1821 775	*1821 775
9-16-17	PLUG, Camshaft Rear Bearing, w/C.I. Eng.	6	1	1947 786	1947 786	
	w/Alum. Eng.	6	1	2264 165		
	w/318 cu. in. Eng.	8	1	---- ---	1821 722	
	Except 318 cu. in. Eng.	8	1	---- ---	*1852 177	*1852 177
9-17-0	**CAMSHAFT SPROCKET**					
9-17-5	SPROCKET	6	1	1947 560	1947 560	
	w/318 cu. in. Eng.	8	1	---- ---	1618 666	
	Except 318 cu. in. Eng.	8	1	---- ---	*1737 622	*1737 622
9-17-13	SPACER, w/318 cu. in. Eng.	8	1	---- ---	1618 717	

★ Indicates use as required. Numerals in parentheses ( ) refer to notes. Printed in U.S.A.
⊟ Indicates parts not listed in any previous parts book. Prices and specifications subject to change without notice.
* Indicates change or addition.

MyMopar.com

CODE	PART NAME AND DESCRIPTION	CYL.	PER CAR	VALIANT LANCER	PLYMOUTH DODGE	CHRYSLER IMPERIAL
9-20-0	**TIMING CHAIN**					
9-20-1	CHAIN	6	1	1737 620	1737 620	
	w/318 cu. in. Eng.	8	1	---- ---	1618 736	
	SP2 w/361 cu. in. Eng., SD2 w/361 cu. in. Eng., SD3	8	1	---- ---	1737 620	1737 620
	SP2, SD2, w/413 cu. in. Eng.	8	1	---- ---	⊟2202 499	
9-23-0	**CHAIN CASE COVER**					
9-23-5	COVER	6	1	2203 106	2203 106	
	w/318 cu. in. Eng.	8	1	---- ---	1944 773	
	Except 318 cu. in. Eng.	8	1	---- ---	*2120 627	*2120 627
	SCREW, w/WASHER		★	*6022 226	*6022 226	*6022 226
9-23-10	SCREW, w/WASHER	6	6	1407 234	1407 234	
		6	1	2121 573	2121 573	
	SP2 w/361 cu. in. Eng., SD2 w/361 cu. in. Eng., SD3	8	4	---- ---	1407 234	1407 234
	SP2 w/361 cu. in. Eng., SD2 w/361 cu. in. Eng., SD3	8	4	---- ---	1945 404	1945 404
	SP2, SD2, w/413 cu. in. Eng.	8	4	---- ---	*6022 226	
	SP2, SD2, w/413 cu. in. Eng.	8	4	---- ---	*1945 404	
9-23-17	GASKET	6	1	1947 554	1947 554	
	w/318 cu. in. Eng.	8	1	---- ---	2129 012	
	Except 318 cu. in. Eng.	8	1	---- ---	*1945 173	*1945 173
9-23-18	OIL SEAL	6	1	1947 581	1947 581	
	w/318 cu. in. Eng.	8	1	---- ---	1618 683	
	Except 318 cu. in. Eng.	6	1	---- ---	*1737 771	*1737 771
9-23-40	INDICATOR, Timing	6	1	2129 944	2129 944	
		8	1	---- ---	1947 236	
9-31-0	**CONNECTING ROD**					
	NOTE: Connecting Rod includes Bearing Cap, Bolt, Nut, Lockwasher and Bushing but does not include Bearing.					
9-31-4	ROD, w/170 cu. in. Eng.	6	6	1947 165		
	w/225 cu. in. Eng.	6	6	2205 552	2205 552	
	w/318 cu. in. Eng	8	8	---- ---	1944 866	
	SP2 w/361 cu. in. Eng., SD2 w/361 cu. in. Eng., SD3, SC1, SC2 w/383 cu. in. Eng.	8	8	---- ---	1737 690	1737 690
	SC2, w/413 cu. in. Eng., SC3, SY1	8	8	---- ---	---- ---	1851 533
	SP2, SD2, w/413 cu. in. Eng.	8	8	---- ---	⊟2406 394	
9-31-5	BOLT, Bearing Cap	6	12	1944 865	1944 865	
	w/318 cu. in. Eng.	8	16	---- ---	1944 865	
	Except 318 cu. in. Eng.	8	16	---- ---	*1737 694	*1737 694
9-31-7	NUT, Cap Bolt		★	1737 695	1737 695	1737 695
9-31-10	BUSHING	8	8	---- ---	1618 701	
9-32-0	**CONNECTING ROD BEARING PACKAGES**					
	NOTE: When .001 thicker wall connecting rod bearings are used for engines in production an identification mark is stamped on the machined surface of the crankshaft center counterweight for six cylinder engines and No. 3 counterweight for V8 cylinder engines. When the thicker wall connecting rod bearings are used the crankshaft will be marked R1, R2, R3, R4 or R5 depending on which journal has the .001 thicker wall bearing.					
	NOTE: Connecting rod bearing packages consist of one upper and one lower bearing.					
9-32-2	BEARING PACKAGE, Std.	6	6	2084 380	2084 380	
	.001 U/S	6	6	2084 381	2084 381	
	.002 U/S	6	6	2084 382	2084 382	
	.003 U/S	6	6	2275 411	2275 411	
	.010 U/S	6	6	2084 383	2084 383	
	.012 U/S	6	6	2275 412	2275 412	

★ Indicates use as required. Numerals in parentheses ( ) refer to notes. Printed in U.S.A.
⊟ Indicates parts not listed in any previous parts book. Prices and specifications subject to change without notice.
* Indicates change or addition. March 8, 1963 Supersedes May 1, 1962.

MyMopar.com

CODE	PART NAME AND DESCRIPTION	CYL.	PER CAR	VALIANT LANCER	PLYMOUTH DODGE	CHRYSLER IMPERIAL
9-32-0	**CONNECTING ROD BEARING PACKAGES - Cont'd**					
9-32-2	BEARING PACKAGE - Cont'd					
	Std., w/318 cu. in. Eng.	8	8	---- ---	1879 617	
	.001 U/S, w/318 cu. in. Eng.	8	8	---- ---	1879 618	
	.002 U/S, w/318 cu. in. Eng.	8	8	---- ---	1879 619	
	.003 U/S, w/318 cu. in. Eng.	8	8	---- ---	1879 620	
	.010 U/S, w/318 cu. in. Eng.	8	8	---- ---	1879 621	
	.012 U/S, w/318 cu. in. Eng.	8	8	---- ---	1879 622	
	Std., SP2 w/361 cu. in. Eng., SD2 w/361 cu. in. Eng., SD3	8	8	---- ---	1818 698	1818 698
	.001 U/S, SP2 w/361 cu. in. Eng., SD2 w/361 cu. in. Eng., SD3	8	8	---- ---	1818 699	1818 699
	.002 U/S, SP2 w/361 cu. in. Eng., SD2 w/361 cu. in. Eng., SD3	8	8	---- ---	1818 700	1818 700
	.003 U/S, SP2 w/361 cu. in. Eng., SD2 w/361 cu. in. Eng., SD3	8	8	---- ---	1818 701	1818 701
	.010 U/S, SP2 w/361 cu. in. Eng., SD2 w/361 cu. in. Eng., SD3	8	8	---- ---	1818 702	1818 702
	.012 U/S, SP2 w/361 cu. in. Eng., SD2 w/361 cu. in. Eng., SD3	8	8	---- ---	1818 703	1818 703
	Std., SP2, SD2, w/413 cu. in. Eng.	8	8	---- ----	⊟2448 330	
9-34-0	**PISTON, W/PIN**					
	NOTE: The following Pistons include Pin and Pin Retaining Rings.					
9-34-5	PISTON, Std., 3.40" Bore	6	6	2084 384	2084 384	
	.005 O/S From 3.40" Bore	6	6	2084 385	2084 385	
	.020 O/S From 3.40" Bore	6	6	2084 386	2084 386	
	.040 O/S From 3.40" Bore	6	6	2084 387	2084 387	
	Std., 3.40" Bore, L. C., Exp.	6	6	2084 388	2084 388	
	.005 From 3.40" Bore, L. C., Exp.	6	6	2084 389	2084 389	
	.020 From 3.40" Bore, L. C., Exp.	6	6	2084 390	2084 390	
	Std. 3.91" Bore w/318 cu. in. Eng.	8	8	---- ---	1843 004	
	.005 O/S From 3.91" Bore w/318 cu. in. Eng.	8	8	---- ---	1843 005	
	.020 O/S From 3.91" Bore w/318 cu. in. Eng.	8	8	---- ---	1843 006	
	.040 O/S From 3.91" Bore w/318 cu. in. Eng.	8	8	---- ---	1843 007	
	Std. 3.91" Bore, L. C., Exp.	8	8	---- ---	1843 316	
	.005 O/S From 3.91" Bore, L. C., Exp.	8	8	---- ---	1843 317	
	.020 O/S From 3.91" Bore, L. C., Exp.	8	8	---- ---	1843 318	
	Std., 4.12" Bore, SP2 w/361 cu. in. Eng., SD2 w/361 cu. in. Eng., SD3, SC1 w/361 cu. in. Eng.	8	8	---- ---	2240 333	2240 333
	.005 O/S From 4.12" Bore, SP2 w/361 cu. in. Eng., SD2 w/361 cu. in. Eng., SD3, SC1 w/361 cu. in. Eng.	8	8	---- ---	2240 334	2240 334
	.020 O/S From 4.12" Bore, SP2 w/361 cu. in. Eng., SD2 w/361 cu. in. Eng., SD3, SC1 w/361 cu. in. Eng.	8	8	---- ---	2240 335	2240 335
	.040 O/S From 4.12" Bore, SP2 w/361 cu. in. Eng., SD2 w/361 cu. in. Eng., SD3, SC1 w/361 cu. in. Eng.	8	8	---- ---	2240 336	2240 336
	Std., 4.18" Bore w/11 to 1 Cylinder Head Compression Ratio, w/413 cu. in. Eng.	8	8	---- ---	⊟2421 336	
	.005 O/S From 4.18" Bore w/11 to 1 Cylinder Head Compression Ratio, w/413 cu. in. Eng.	8	8	---- ---	⊟2421 337	
	.020 O/S From 4.18" Bore w/11 to 1 Cylinder Head Compression Ratio, w/413 cu. in. Eng.	8	8	---- ---	⊟2421 338	
	.050 O/S From 4.18" Bore w/11 to 1 Cylinder Head Compression Ratio, w/413 cu. in. Eng.	8	8	---- ---	⊟2421 339	
	Std., 418" Bore w/13.56 to 1 Cylinder Head Compression Ratio, w/413 cu. in. Eng.	8	8	---- ---	⊟2421 340	

★ Indicates use as required. Numerals in parentheses ( ) refer to notes. Printed in U.S.A.
⊟ Indicates parts not listed in any previous parts book. Prices and specifications subject to change without notice.
* Indicates change or addition.

MyMopar.com

CODE	PART NAME AND DESCRIPTION	CYL.	PER CAR	VALIANT LANCER	PLYMOUTH DODGE	CHRYSLER IMPERIAL
9-34-0	**PISTON, W/PIN - Cont'd**					
9-34-5	PISTON - Cont'd					
	.005 O/S From 4.18" Bore w/13.56 to 1 Cylinder Head Compression Ratio, w/413 cu. in. Eng. .	8	8	---- ---	⊟2421 341	
	.020 O/S From 4.18" Bore w/13.56 to 1 Cylinder Head Compression Ratio, w/413 cu. in. Eng. .	8	8	---- ---	⊟2421 342	
	.050 O/S From 4.18" Bore w/13.56 to 1 Cylinder Head Compression Ratio, w/413 cu. in. Eng. .	8	8	---- ---	⊟2421 343	
	Std., 4.12" Bore, L. C. Exp., SC1	8	8	---- ---	---- ---	2240 337
	.005 O/S From 4.12" Bore, L. C., Exp., SC1 . .	8	8	---- ---	---- ---	2240 338
	.020 O/S From 4.12" Bore, L.C., Exp., SC1 . .	8	8	---- ---	---- ---	2240 339
	Std., 4.25" Bore, SC1 w/383 cu. in. Eng., SC2 w/383 cu. in. Eng.	8	8	---- ---	---- ---	1879 333
	.005 O/S From 4.25" Bore, SC1 w/383 cu. in. Eng., SC2 w/383 cu. in. Eng.	8	8	---- ---	---- ---	1879 334
	.020 O/S From 4.25" Bore, SC1 w/383 cu. in. Eng., SC2 w/383 cu. in. Eng.	8	8	---- ---	---- ---	1879 335
	.040 O/S From 4.25" Bore, SC1 w/383 cu. in. Eng., SC2 w/383 cu. in. Eng.	8	8	---- ---	---- ---	1879 336
	Std., 4.18" Bore, SC2 w/413 cu. in. Eng., SC3, SY1	8	8	---- ---	---- ---	1879 337
	.005 O/S From 4.18" Bore, SC2 w/413 cu. in. Eng., SC3, SY1	8	8	---- ---	---- ---	1879 338
	.020 O/S From 4.18" Bore, SC2 w/413 cu. in. Eng., SC3, SY1	8	8	---- ---	---- ---	1879 339
	.040 O/S From 4.18" Bore, SC2 w/413 cu. in. Eng., SC3, SY1	8	8	---- ---	---- ---	1879 340
	Std., 4.18" Bore, L.C., Exp., SC3, SY1	8	8	---- ---	---- ---	1879 638
	.005 O/S From 4.18" Bore, L.C., Exp., SC3, SY1	8	8	---- ---	---- ---	1879 639
	.020 O/S From 4.18" Bore, L.C., Exp., SC3, SY1	8	8	---- ---	---- ---	1879 640
9-35-0	**PISTON RING SETS**					
9-35-1	SET, Multi-Purpose, Std. to .009 O/S From 3.40" Bore, w/C.I. Eng.	6	1	2275 452	2275 452	
	.020 to .029 O/S From 3.40" Bore, w/C.I. Eng. .	6	1	2275 453	2275 453	
	.040 to .049 O/S From 3.40" Bore, w/C.I. Eng. .	6	1	2275 454	2275 454	
	SET, Multi-Purpose, Chrome, Std. to .009 O/S From 3.40" Bore, w/Alum. and C.I. Eng.	6	1	2275 439	2275 439	
	Chrome, .020 to .029 O/S From 3.40" Bore, w/Alum. and C.I. Eng.	6	1	2275 440	2275 440	
	Chrome, .040 to .049 O/S From 3.40" Bore, w/Alum. and C.I. Eng.	6	1	2275 441	2275 441	
	Std. to .009 O/S From 3.91" Bore, w/318 cu. in. Eng.	8	1	---- ---	1752 588	
	.020 to .029 O/S From 3.91" Bore, w/318 cu. in. Eng.	8	1	---- ---	1752 589	
	.040 to .049 O/S From 3.91" Bore, w/318 cu. in. Eng.	8	1	---- ---	1752 590	
	Std. to .009 O/S From 4.12" Bore, SP2 w/361 cu.in. Eng., SD2 w/361 cu.in. Eng., SD3, SC1 w/361 cu. in. Eng.	8	1	---- ---	1843 330	1843 330
	.020 to .029 O/S From 4.12" Bore, SP2 w/361 cu. in. Eng., SD2 w/361 cu. in. Eng., SD3, SC1 w/361 cu. in. Eng.	8	1	---- ---	1843 331	1843 331
	.040 to .049 O/S From 4.12" Bore, SP2 w/361 cu. in. Eng., SD2 w/361 cu. in. Eng., SD3, SC1 w/361 cu. in. Eng.	8	1	---- ---	1843 332	1843 332
	Std. to .009 O/S From 4.18" Bore, w/413 cu. in. Eng.	8	1	---- ---	⊟2421 372	

★ Indicates use as required. Numerals in parentheses ( ) refer to notes. Printed in U.S.A.
⊟ Indicates parts not listed in any previous parts book. Prices and specifications subject to change without notice.
* Indicates change or addition.

March 8, 1963 Supersedes May 1, 1962.

MyMopar.com

CODE	PART NAME AND DESCRIPTION	CYL.	PER CAR	VALIANT LANCER	PLYMOUTH DODGE	CHRYSLER IMPERIAL
9-35-0	**PISTON RING SETS - Cont'd**					
9-35-1	SET - Cont'd					
	.020 to .029 O/S From 4.18" Bore, w/413 cu. in. Eng.	8	1	---- ---	⊟2421 373	
	.050 to .059 O/S From 4.18" Bore, w/413 cu. in. Eng.	8	1	---- ---	⊟2421 374	
	Std. .009 O/S From 4.25 Bore, SC2 w/383 cu. in. Eng.	8	1	---- ---	---- ---	1881 693
	.020 to .029 O/S From 4.25 Bore, SC2 w/383 cu. in. Eng.	8	1	---- ---	---- ---	1881 694
	.040 to .049 O/S From 4.25" Bore, SC2 w/383 cu. in. Eng.	8	1	---- ---	---- ---	1881 695
	Std. to .009 O/S From 4.18" Bore, SC2 w/413 cu. in. Eng., SC3, SY1	8	1	---- ---	---- ---	1881 699
	.020 to .029 O/S From 4.18" Bore, SC2 w/413 cu. in. Eng., SC3, SY1	8	1	---- ---	---- ---	1881 700
	.040" to .049 O/S From 4.18" Bore, SC2 w/413 cu. in. Eng., SC3, SY1	8	1	---- ---	---- ---	1881 701
9-36-0	**PISTON PIN**					
9-36-5	PIN, Std. w/318 cu. in. Eng.	8	8	---- ---	1618 738	
	.003 O/S w/318 cu. in. Eng.	8	8	---- ---	1618 739	
	.008 O/S w/318 cu. in. Eng.	8	8	---- ---	1618 740	
9-36-7	RING, Retaining.	8	16	---- ---	1324 470	
9-39-0	**VALVE**					
9-39-1	GASKET PACKAGE, Valve Grinding	6	1	2196 046	2196 046	
	w/225 cu. in. Alum. Eng.	6	1	2240 629		
	w/318 cu. in. Eng.	8	1	---- ---	2196 086	
	SP2 w/361 cu. in. Eng., SD2 w/361 cu. in. Eng., SD3, SC1, SC2 w/383 cu. in. Eng.	8	1	---- ---	1879 703	1879 703
	SP2, SD2, w/413 cu. in. Eng.	8	1	---- ---	⊟2421 365	
	SC2 w/413 cu. in. Eng., SC3, SY1	8	1	---- ---	1879 704	1879 704
9-39-5	VALVE, Intake, Std.	6	6	1947 623	1947 623	
	.005 O/S	6	6	2121 578	2121 578	
	.015 O/S	6	6	2121 579	2121 579	
	.030 O/S	6	6	2121 580	2121 580	
	Std. w/318 cu. in. Eng.	8	8	---- ---	1945 318	
	.005 O/S w/318 cu. in. Eng.	8	8	---- ---	1945 319	
	.015 O/S w/318 cu. in. Eng.	8	8	---- ---	1945 320	
	.030 O/S w/318 cu. in. Eng.	8	8	---- ---	1945 321	
	Std., SP2 w/361 cu. in. Eng., SD2 w/361 cu. in. Eng., SD3	8	8	---- ---	2206 103	2206 103
	.005 O/S, SP2 w/361 cu. in. Eng., SD2 w/361 cu. in. Eng., SD3	8	8	---- ---	2206 104	2206 104
	.015 O/S, SP2 w/361 cu. in. Eng., SD2 w/361 cu. in. Eng., SD3	8	8	---- ---	2206 105	2206 105
	.030 O/S, SP2 w/361 cu. in. Eng., SD2 w/361 cu. in. Eng., SD3	8	8	---- ---	2206 106	2206 106
	Std. SP2, SD2, w/413 cu. in. Eng.	8	8	---- ---	⊟2402 318	
	.005 O/S, SP2, SD2, w/413 cu. in. Eng.	8	8	---- ---	⊟2402 319	
	.015 O/S, SP2, SD2, w/413 cu. in. Eng.	8	8	---- ---	⊟2402 320	
	.030 O/S, SP2, SD2, w/413 cu. in. Eng.	8	8	---- ---	⊟2402 321	
9-39-6	VALVE, Exhaust, Std.	6	6	1947 624	1947 624	
	.005 O/S	6	6	2121 581	2121 581	
	.015 O/S	6	6	2121 582	2121 582	
	.030 O/S	6	6	2121 583	2121 583	

★ Indicates use as required. Numerals in parentheses ( ) refer to notes. Printed in U.S.A.
⊟ Indicates parts not listed in any previous parts book. Prices and specifications subject to change without notice.
* Indicates change or addition.

MyMopar.com

CODE	PART NAME AND DESCRIPTION	CYL.	PER CAR	VALIANT LANCER	PLYMOUTH DODGE	CHRYSLER IMPERIAL
9-39-0	**VALVE - Cont'd**					
9-39-6	VALVE - Cont'd					
	Std. w/318 cu. in. Eng.	8	8	---- ---	1852 248	
	.005 O/S w/318 cu. in. Eng.	8	8	---- ---	1637 563	
	.015 O/S w/318 cu. in. Eng.	8	8	---- ---	1637 564	
	.030 O/S w/318 cu. in. Eng.	8	8	---- ---	1637 565	
	Std., SP2 w/361 cu. in. Eng., SD2 w/361 cu. in. Eng., SD3	8	8	---- ---	1737 698	1737 698
	.005 O/S, SP2 w/361 cu. in. Eng., SD2 w/361 cu. in. Eng., SD3	8	8	---- ---	1739 612	1739 612
	.015 O/S, SP2 w/361 cu. in. Eng., SD2 w/361 cu. in. Eng., SD3	8	8	---- ---	1739 613	1739 613
	.030 O/S, SP2 w/361 cu. in. Eng., SD2 w/361 cu. in. Eng., SD3	8	8	---- ---	1739 614	1739 614
	Std., SP2, SD2, w/413 cu. in. Eng.	8	8	---- ---	⊟2402 322	
	.005 O/S, SP2, SD2, w/413 cu. in. Eng.	8	8	---- ---	⊟2402 323	
	.015 O/S, SP2, SD2, w/413 cu. in. Eng.	8	8	---- ---	⊟2402 324	
	.030 O/S, SP2, SD2, w/413 cu. in. Eng.	8	8	---- ---	⊟2402 325	
9-39-14	SHIELD, Intake Valve Stem Oil	6	6	1630 241	1630 241	
	SHIELD, Exhaust Valve Stem Oil	6	6	2128 977	2128 977	
	SHIELD, Intake Valve Stem Oil, w/318 cu. in. Eng.	8	8	---- ---	1630 241	
	SHIELD, Exhaust Valve Stem Oil, w/318 cu. in. Eng.	8	8	---- ---	2402 178	
	SHIELD, Valve Stem Oil, SP2 w/361 cu. in. Eng., SD2 w/361 cu. in. Eng., SD3	8	16	---- ---	2121 686	2121 686
9-39-15	SPRING	6	12	1739 534	1739 534	
	w/318 cu. in. Eng.	8	16	---- ---	1739 534	
	w/DAMPER, SP2 w/361 cu. in. Eng., SD2 w/361 cu. in. Eng., SD3, SC1 w/383 cu. in. Eng.	8	16	---- ---	1855 042	1855 042
	SD3, SC1 w/361 cu. in. Eng., SC2 w/383 cu. in. Eng., SC2 w/413 cu. in. Eng., w/1 Four Barrel Carburetor, SC3, SY1	8	16	---- ---	1944 854	1944 854
	w/DAMPER, w/413 cu. in. Eng.	8	16	---- ---	⊟2402 265	
	Inner, w/413 cu. in. Eng.	8	16	---- ---	⊟2202 547	
	SC2 w/413 cu. in. Eng., w/2 Four Barrel Carburetors	8	16	---- ---	---- ---	2402 011
9-39-16	RETAINER, Valve Spring	6	12	1619 636	1619 636	
	Except SP2, SD2, w/413 cu. in. Eng.	8	16	---- ---	*1619 636	*1619 636
	SP2, SD2, w/413 cu. in. Eng.	8	16	---- ---	⊟2202 546	
9-39-17	LOCK, Intake Valve Spring Retainer	6	12	381 875	381 875	
	Except SP2, SD2, w/413 cu. in. Eng.	8	16	---- ---	* 381 875	* 381 875
	LOCK, Exhaust Valve Spring Retainer	6	12	1614 666	1614 666	
	Except SP2, SD2, w/413 cu. in. Eng.	8	16	---- ---	*1614 666	*1614 666
	Lock, Valve Spring Retainer, SP2, SD2, w/413 cu. in. Eng.	8	32	---- ---	⊟2402 312	
9-39-21	SPACER, Valve Spring, w/318 cu. in. Eng.	8	16	---- ---	1639 947	
	Except 318 cu. in. Eng.	8	16	---- ---	*1859 144	*1859 144
9-41-0	**VALVE TAPPET**					
9-41-1	SILENCER PACKAGE, Tappet Chamber, SP2 w/361 cu. in. Eng., SD2 w/361 cu. in. Eng., SD3	8	1	---- ---	1879 747	1879 747
9-41-4	TAPPET, Std.	6	12	1739 356	1739 356	
	.001 O/S.	6	12	1739 357	1739 357	
	.008 O/S.	6	12	1739 358	1739 358	
	.030 O/S.	6	12	1739 359	1739 359	

★ Indicates use as required. Numerals in parentheses ( ) refer to notes. Printed in U.S.A.
⊟ Indicates parts not listed in any previous parts book. Prices and specifications subject to change without notice.
* Indicates change or addition.

March 8, 1963 Supersedes May 1, 1962.

MyMopar.com

CODE	PART NAME AND DESCRIPTION	CYL.	PER CAR	VALIANT LANCER	PLYMOUTH DODGE	CHRYSLER IMPERIAL
9-41-0	**VALVE TAPPET - Cont'd**					
9-41-4	TAPPET - Cont'd					
	Std., SP2 w/318 cu. in. Eng., SD2 w/318 cu. in. Eng., SC2 w/413 cu. in. Eng., w/ 2 Four Barrel Carburetors	8	16	---- ---	1739 356	1739 356
	.001 O/S, SP2 w/318 cu. in Eng., SD2 w/318 cu. in. Eng., SC2 w/413 cu. in. Eng., w/ 2 Four Barrel Carburetors	8	16	---- ---	1739 357	1739 357
	.008 O/S, SP2 w/318 cu. in. Eng., SD2 w/318 cu. in. Eng., SC2 w/413 cu. in. Eng., w/ 2 Four Barrel Carburetors	8	16	---- ---	1739 358	1739 358
	.030 O/S, SP2 w/318 cu. in. Eng., SD2 w/318 cu. in. Eng., SC2 w/413 cu. in. Eng., w/2 Four Barrel Carburetors	8	16	---- ---	1739 359	1739 359
	Std., SP2 w/361 cu. in. Eng., SD2 w/361 cu. in. Eng., SD3, SC1, SC2 w/383 and 413 cu. in. Eng., w/ 1 Four Barrel Carburetor, SC3, SY1	8	16	---- ---	2084 029	2084 029
	.001 O/S, SP2 w/361 cu. in. Eng., SD2 w/361 cu. in. Eng., SD3, SC1, SC2 w/383 and 413 cu. in. Eng., w/ 1 Four Barrel Carburetor, SC3, SY1	8	16	---- ---	2084 030	2084 030
	.008 O/S, SP2 w/361 cu. in. Eng., SD2 w/361 cu. in. Eng., SD3, SC1, SC2 w/383 and 413 cu. in. Eng., w/ 1 Four Barrel Carburetor, SC3, SY1	8	16	---- ---	2084 031	2084 031
	.030 O/S, SP2 w/361 cu. in. Eng., SD2 w/361 cu. in. Eng., SD3, SC1, SC2 w/383 and 413 cu. in. Eng., w/1 Four Barrel Carburetor, SC3, SY1	8	16	---- ---	2084 032	2084 032
	Std., SP2, SD2, w/413 cu. in. Eng.	8	16	--- ---	⊟2402 288	
	.001 O/S, SP2, SD2, SD2, w/413 cu. in. Eng.	8	16	---- ---	⊟2402 289	
	.008 O/S, SP2, SD2, w/413 cu. in. Eng.	8	16	---- ---	⊟2402 290	
	.030 O/S, SP2, SD2, w/413 cu. in. Eng.	8	16	---- ---	⊟2402 719	
9-42-0	**VALVE PUSH ROD**					
9-42-1	ROD, w/170 cu. in. Eng.	6	12	1947 704		
	w/225 cu. in. Eng.	6	12	2120 514	2120 514	
	w/318 cu. in. Eng.	8	16	---- ---	1637 721	
	SP2 w/361 cu. in. Eng., SD2 w/361 cu. in. Eng., SD3, SC1, SC2 w/383 cu. in. Eng.	8	16	---- ---	1737 757	1737 757
	SP2, SD2, w/413 cu. in. Eng.	8	16	---- ---	⊟2402 326	
	SC2 w/413 cu. in. Eng., w/2 Four Barrel Carburetors	8	16	---- ---	---- ---	2129 010
	SC2 w/413 cu. in. Eng., w/ 1 Four Barrel Carburetor SC3, SY1	8	16	---- ---	---- ---	1851 669
9-43-0	**VALVE ROCKER**					
9-43-1	ROCKER	6	12	1947 594	1947 594	
	Intake Valve w/318 cu. in. Eng.	8	8	---- ---	1859 919	
	Exhaust Valve w/318 cu. in. Eng.	8	8	---- ---	1854 953	
	Right, SP2 w/361 cu. in. Eng., SD2 w/361 cu. in. Eng., SD3, SC1, SC2 w/383 and 413 cu. in. Eng., w/1 Four Barrel Carburetor, SC3, SY1	8	8	---- ---	1737 646	1737 646
	Left, SP2 w/361 cu. in. Eng., SD2 w/361 cu. in. Eng., SD3, SC1, SC2 w/383 and 413 cu. in. Eng., w/1 Four Barrel Carburetor, SC3, SY1	8	8	---- ---	1737 645	1737 645
	Right, w/Adjusting SCREW and NUT, SP2, SD2, w/413 cu. in. Eng.	8	8	---- ---	⊟2402 521	
	Left, w/Adjusting SCREW and NUT, SP2, SD2, w/413 cu. in. Eng.	8	8	---- ---	⊟2402 522	
	Right, w/Adjusting SCREW, SC2 w/413 cu. in. Eng., w/2 Four Barrel Carburetors	8	8	---- ---	---- ---	2202 550
	Left, w/Adjusting SCREW, SC2 w/413 cu. in. Eng., w/2 Four Barrel Carburetors	8	8	---- ---	---- ---	2202 558

★ Indicates use as required. Numerals in parentheses ( ) refer to notes. Printed in U.S.A.
⊟ Indicates parts not listed in any previous parts book. Prices and specifications subject to change without notice.
March 8, 1963 Supersedes May 1, 1962. * Indicates change or addition.

MyMopar.com

CODE	PART NAME AND DESCRIPTION	CYL.	PER CAR	VALIANT LANCER	PLYMOUTH DODGE	CHRYSLER IMPERIAL
9-43-0	**VALVE ROCKER - Cont'd**					
9-43-3	SCREW, Adjusting	6	12	1855 238	1855 238	
	SC2 w/413 cu. in. Eng., w/ 2 Four Barrel Carburetors	8	16	---- ---	1855 238	1855 238
	SP2, SD2, w/413 cu. in. Eng.	8	16	---- ---	⊟2402 525	
9-43-4	NUT, Valve Rocker Adjusting Screw, SP2, SD2, w/413 cu. in. Eng.	8	16	---- ---	⊟6023 587	
9-43-5	SPACER	6	6	2120 694	2120 694	
	SP2 w/361 cu. in. Eng., SD2 w/361 cu. in. Eng., SD3, SC1, SC2 w/383 and 413 cu. in. Eng., w/1 Four Barrel Carburetor, SC3, SY1	8	8	---- ---	1737 756	1737 756
9-43-9	SHAFT	6	1	1947 614	1947 614	
	w/318 cu. in. Eng.	8	2	---- ---	1618 671	
	Except 318 cu. in. Eng.	8	2	---- ---	*1821 393	*1821 393
9-43-10	BRACKET, Shaft, End and Center, SP2 w/361 cu. in. Eng., SD2 w/361 cu. in. Eng., SD3, SC1, SC2 w/383 and 413 cu. in. Eng., w/1 Four Barrel Carburetor, SC3, SY1	8	6	---- ---	1739 594	1739 594
	SP2, SD2, w/413 cu. in. Eng., SC2 w/413 cu. in. Eng., w/2 Four Barrel Carburetors	8	6	---- ---	*2202 551	*2202 551
	BRACKET, Shaft, Intermediate, SP2 w/361 cu. in. Eng., SD2 w/361 cu. in. Eng., SD3, SC1, SC2 w/383 and 413 cu. in. Eng., w/1 Four Barrel Carburetor, SC3, SY1	8	4	---- ---	1739 595	1739 595
	SP2, SD2, w/413 cu. in. Eng., SC2 w/413 cu. in. Eng., w/2 Four Barrel Carburetors	8	4	---- ---	*2202 556	
9-43-11	RETAINER, Shaft End and Intermediate	6	6	1947 616	1947 616	
	RETAINER, Center	6	1	1947 617	1947 617	
9-43-14	SPRING, Shaft	8	8	---- ---	1632 106	
	SP2, SD2, w/413 cu. in. Eng., SC2 w/413 cu. in. Eng., w/2 Four Barrel Carburetors	8	8	---- ---	*2202 557	*2202 557
9-43-19	PLUG, Shaft	6	2	1324 268	1324 268	
	w/318 cu. in. Eng.	8	4	---- ---	1858 802	
	Except 318 cu. in. Eng.	8	4	---- ---	*1324 268	*1324 268
9-43-23	WASHER, Shaft Bracket Screw, except 318 cu. in. Eng.	8	10	---- ---	*1536 242	*1536 242
9-43-26	PIN, Shaft Bracket Locating	8	2	---- ---	1670 476	
9-45-0	**FLYWHEEL**					
9-45-1	FLYWHEEL, w/Ring GEAR	6	1	2128 992	2128 992	
		8	1	---- ---	2264 597	
	SD3, SC1, SC2	8	1	---- ---	2264 653	2264 653
	SP2, SD2, w/413 cu. in. Eng.	8	1	---- ---	⊟2402 215	
9-45-2	GEAR, Flywheel or Torque Converter	6	1	2121 196	2121 196	
	Flywheel Ring	8	1	---- ---	1941 648	
	Torque Converter Ring	8	1	---- ---	1941 648	1941 648
	Flywheel Ring, SD3, SC1, SC2	8	1	---- ---	1673 646	1673 646
9-45-6	BOLT, w/361, 383 and 413 cu. in. Eng.	8	6	---- ---	*6023 145	*6023 145
9-46-0	**TORQUE CONVERTER**					
9-46-4	TORQUE CONVERTER	6	1	2204 403	2204 403	
		8	1	---- ---	2125 090	2125 090

★ Indicates use as required. Numerals in parentheses ( ) refer to notes. Printed in U.S.A.
⊟ Indicates parts not listed in any previous parts book. Prices and specifications subject to change without notice.
* Indicates change or addition.

March 8, 1963 Supersedes May 1, 1962.

MyMopar.com

CODE	PART NAME AND DESCRIPTION	CYL.	PER CAR	VALIANT LANCER	PLYMOUTH DODGE	CHRYSLER IMPERIAL
9-46-0	**TORQUE CONVERTER - Cont'd**					
9-46-8	PLATE, Drive	6	1	1949 763	1949 763	
		8	1	---- ---	2204 768	2204 768
9-46-21	SCREW, Drive Plate		4	1949 765	1949 765	1949 765
	Drive Plate to Crankshaft		6	1949 424	1949 424	1949 424
9-46-27	TUBE, Transmission Oil Cooler, Inlet 25 foot Roll		★	1843 253	1843 253	1843 253
	Outlet 25 foot Roll		★	1843 253	1843 253	1843 253
9-46-31	OIL COOLER, Radiator Core, SC1, SC2		1	1903 792	1903 792	1903 792
	SC3, SY1	8	1	---- ---	---- ---	1903 791
9-46-33	BRACKET, Transmission Oil Cooler Tube		1	1949 176	1949 176	1949 176
9-46-40	ELBOW, Transmission Oil Cooler Tube Inlet	6	1	2205 237	2205 237	
	CONNECTOR		★	118 749	118 749	118 749
9-46-42	SLEEVE, Transmission Oil Filter Tube Inlet		1	1316 669	1316 669	1316 669
9-46-43	NUT, Transmission Oil Cooler Tube Radiator End		★	1941 667	1941 667	1941 667
	Transmission End, Oil Filter End		★	1941 667	1941 667	1941 667
9-46-107	SCREW, w/WASHER	8	2	---- ---	6012 042	6012 042
9-46-130	OIL SEAL, Impeller Hub	6	1	2124 705	2124 705	
		8	1	---- ---	1942 020	1942 020
9-46-228	ROLLER, Overrunning Clutch		8	670 776	670 776	670 776
9-48-0	**MANIFOLD**					
9-48-6	MANIFOLD, Exhaust	6	1	2298 917	2298 917	
	Right w/318 cu. in. Eng.	8	1	---- ---	2129 194	
	Left w/318 cu. in. Eng.	8	1	---- ---	2268 127	
	SP2 w/361 cu. in. Eng., SD2 w/361 cu. in. Eng., Right	8	1	---- ---	2205 905	
	SP2 w/361 cu. in. Eng., SD2 w/361 cu. in. Eng., Left	8	1	---- ---	2203 091	
	Header, Right SP2, SD2, w/413 cu. in. Eng.	8	1	---- ---	⊟2402 335	
	Header, Left SP2, SD2, w/413 cu. in. Eng.	8	1	---- ---	⊟2402 337	
	SD3, SC1, SC2 w/383 and 413 cu. in. Eng., w/1 Four Barrel Carburetor, SC3, SY1, Right	8	1	---- ---	1854 990	1854 990
	SC2 w/413 cu. in. Eng., w/2 Four Barrel Carburetors, Right	8	1	---- ---	---- ---	2268 250
	Left, SD3	8	1	---- ---	1739 600	1739 600
9-48-7	MANIFOLD, Intake	6	1	2205 902	2205 902	
	w/318 cu. in. Eng., w/ 1 Two Barrel Carburetor.	8	1	---- ---	1859 228	
	w/318 cu. in. Eng., w/ 1 Four Barrel Carburetor.	8	1	---- ---	1859 298	
	SP2 w/361 cu. in. Eng., SD2 w/361 cu. in. Eng., SC1 w/383 cu. in. Eng., SC2 w/383 cu. in. Eng., w/1 Four Barrel Carburetor	8	1	---- ---	*1859 300	*1859 300
	SP2, SD2, w/413 cu. in. Eng.	8	1	---- ---	⊟2402 332	
	SCREW, 3/8"-16 x 2"	8	2	---- ---	* 138 246	
	SCREW, 3/8"-16 x 2 1/2"	8	2	---- ---	* 138 248	
	SD3, SC1 w/361 cu. in. Eng., SC2 w/383 cu. in. Eng., w/1 Two Barrel Carburetor	8	1	---- ---	*1859 299	*1859 299
	SC2 w/413 cu. in. Eng., w/2 Four Barrel Carburetors	8	1	---- ---	---- ---	1854 817
	SC2 w/413 cu. in. Eng., w/1 Four Barrel Carburetor, SC3, SY1	8	1	---- ---	---- ---	1858 623
9-48-8	CONNECTOR, Vacuum Control		1	1858 955	1858 955	1858 955

★ Indicates use as required. Numerals in parentheses ( ) refer to notes. Printed in U.S.A.
⊟ Indicates parts not listed in any previous parts book. Prices and specifications subject to change without notice.
March 8, 1963 Supersedes May 1, 1962. * Indicates change or addition.

MyMopar.com

CODE	PART NAME AND DESCRIPTION	CYL.	PER CAR	VALIANT LANCER	PLYMOUTH DODGE	CHRYSLER IMPERIAL
9-48-0	**MANIFOLD - Cont'd**					
9-48-9	PLUG, Intake Manifold Screw Hole, w/413 cu. in. Eng.	8	6	---- ---	⊟2129 351	
	PLUG, Intake Manifold Core Hole	8	6	---- ---	⊟2121 198	
9-48-12	STUD, Intake and Exhaust Manifold	6	13	2121 585	2121 585	
9-48-14	WASHER, Intake and Exhaust Manifold Stud	6	4	2121 223	2121 223	
		6	6	2206 416	2206 416	
9-48-27	REINFORCEMENT, Intake Manifold Gasket End, SP2 w/361 cu. in. Eng., SD2 w/361 cu. in. Eng., SD3, SC1, SC2 w/383 cu. in. Eng.	8	2	---- ---	1859 332	1859 332
	w/413 cu. in. Eng.	8	2	---- ---	*1851 665	*1851 665
9-48-38	SEAL, Intake Manifold Screw Hole Plug, SP2, SD2, w/413 cu. in. Eng.	8	6	---- ---	⊟2128 962	
9-48-43	STUD, Exhaust Manifold Flange, w/318 cu. in. Eng.	8	1	---- ---	1402 981	
	Exhaust Manifold, Lower w/318 cu. in. Eng.	8	8	---- ---	1613 782	
	Exhaust Manifold, except 318 cu. in. Eng.	8	12	---- ---	*1613 782	*1613 782
9-48-44	NUT, Exhaust Manifold Upper Ends	6	2	1947 753	1947 753	
	Exhaust Manifold Stud, SP2 w/361 cu. in. Eng., SD2 w/361 cu. in. Eng.	8	9	---- ---	1737 695	
	Exhaust Manifold Stud, Long, SP2 w/361 cu. in. SD2 w/361 cu. in. Eng.	8	3	---- ---	2268 282	
	Exhaust Manifold Stud, SD3	8	12	---- ---	1737 695	1737 695
	SP2, SD2, w/413 cu. in. Eng.	8	10	---- ---	*1737 695	
	SP2, SD2, w/413 cu. in. Eng., Long	8	2	---- ---	*2268 282	
9-48-45	WASHER, Exhaust Manifold Stud Upper Ends	6	2	1947 752	1947 752	
9-48-56	SHIELD, Intake Manifold Heat, w/318 cu. in. Eng.	8	1	---- ---	1619 627	
	SHIELD, Exhaust Manifold Right, Heat, SP2 w/361 cu. in. Eng., SD2 w/361 cu. in. Eng.	8	1	---- ---	2264 757	
9-48-125	COVER, Exhaust Manifold to Carburetor Heat Tube, SC2 w/413 cu. in. Eng., w/ 2 Four Barrel Carburetors	8	★	---- ---	---- ---	1484 356
9-48-126	TUBE, Exhaust Manifold Heat, SC2 w/413 cu. in. Eng., w/ 1 Four Barrel Carburetor	8	1	---- ---	---- ---	1325 850
9-48-138	SHIELD, Heat Tube Splash, SC2 w/413 cu. in. Eng., w/ 2 Four Barrel Carburetors	8	1	---- ---	---- ---	1854 853
9-50-0	**MANIFOLD GASKETS**					
9-50-1	GASKET SET	6	1	2084 416	2084 416	
	Intake Manifold, w/318 cu. in. Eng.	8	1	---- ---	2084 347	
	Intake Manifold, SP2, SD2, w/413 cu. in. Eng.	8	1	---- ---	⊟2421 363	
9-50-3	GASKET, Intake to Exhaust Manifold, UP TO Eng., No. S17-12-1 and S22-12-1	6	1	2206 120	2206 120	
	AFTER Eng. No. S17-12-1 and S22-12-1	6	1	2268 264	2268 264	
9-50-5	GASKET, Exhaust Manifold, w/318 cu. in. Eng.	8	2	---- ---	1670 508	
	GASKET, Exhaust Manifold End, w/413 cu. in. Eng.	8	4	---- ---	⊟2402 353	
	GASKET, Exhaust Manifold, Center, w/413 cu. in. Eng.	8	2	---- ---	⊟2402 354	
9-50-6	GASKET, Intake Manifold, SP2 w/361 cu. in. Eng., SD2 w/361 cu. in. Eng., SD3, SC1, SC2 w/383 cu. in. Eng.	8	1	---- ---	1737 709	1737 709
	SC2 w/413 cu. in. Eng., SC3, SY1	8	1	---- ---	---- ---	1851 664

★ Indicates use as required. Numerals in parentheses ( ) refer to notes. Printed in U.S.A.
⊟ Indicates parts not listed in any previous parts book. Prices and specifications subject to change without notice.
* Indicates change or addition.

March 8, 1963 Supersedes May 1, 1962

MyMopar.com

CODE	PART NAME AND DESCRIPTION	CYL.	PER CAR	VALIANT LANCER	PLYMOUTH DODGE	CHRYSLER IMPERIAL
9-58-0	**MANIFOLD HEAT CONTROL VALVE THERMOSTAT**					
9-58-1	PACKAGE, Manifold Heat Control	6	1	2084 797	2084 797	
	w/318 cu. in. Eng.	8	1	---- ---	2240 684	
	SP2 w/361 cu. in. Eng., SD2 w/361 cu. in. Eng.	8	1	---- ---	2279 887	
	SD3	8	1	---- ---	2084 794	2084 794
9-58-5	THERMOSTAT	6	1	2121 554	2121 554	
	SP2 w/318 cu. in. Eng., SD2 w/318 cu. in. Eng., SD3	8	1	---- ---	960 003	960 003
	SP2 w/361 cu. in. Eng., SD2 w/361 cu. in. Eng.	8	1	---- ---	2128 933	
9-58-12	SHIELD	6	1	2121 430	2121 430	
	SP2 w/318 cu. in. Eng., SD2 w/318 cu. in. Eng., SD3	8	1	---- ---	1670 515	1670 515
	SP2 w/361 cu. in. Eng., SD2 w/361 cu. in. Eng.	8	1	---- ---	1944 616	
9-58-13	BOLT, Shield		1	1736 012	1736 012	1736 012
9-58-14	LOCK, Shield		1	1409 594	1409 594	1409 594
9-59-0	**MANIFOLD HEAT CONTROL VALVE**					
9-59-13	SPRING		1	1558 897	1558 897	1558 897
9-59-15	PIN, Spring		1	1639 597	1639 597	1639 597
9-62-0	**MANIFOLD HEAT CONTROL VALVE STOP**					
9-62-1	STOP	6	1	2121 455	2121 455	
		8	1	---- ---	683 057	683 057
9-64-0	**ENGINE FRONT SUPPORT**					
9-64-5	SUPPORT, Right, w/318 cu. in. Eng., UP TO	8	1	---- ---	2120 236(1)	
	Left, w/318 cu. in. Eng., UP TO	8	1	---- ---	2206 475(1)	
	Right, SD3, SC1, SC2	8	1	---- ---	2120 238	2120 238
	Left, SD3, SC1, SC2	8	1	---- ---	2120 237	2120 237
	Right, SC3, SY1	8	1	---- ---	---- ---	2128 572
	Left, SC3, SY1	8	1	---- ---	---- ---	2128 571
9-64-13	STUD, Engine Front Support to Frame, SP2 and SD2 w/318 and 361 cu. in. Eng., UP TO, SD3	8	2	---- ---	2128 773(1)	2128 773
9-64-17	NUT, Engine Front Support to Frame Stud, SP2 and SD2 w/318 and 361 cu. in. Eng., UP TO		2	2202 834	2202 834(2)	
	SP2 and SD2 w/318 and 361 cu. in. Eng., AFTER	8	2	---- ---	6023 353(2)	6023 353
9-64-18	WASHER, Engine Front Support to Frame Stud		2	2128 774	2128 774	2128 774
9-64-22	SHIELD, Heat, Right, w/318 cu. in. Eng., UP TO	8	1	---- ---	2128 943(1)	
	Left, w/318 cu. in. Eng.	8	1	---- ---	2264 879(1)	
	Right, SD3	8	1	---- ---	2128 935	2128 935
	Left, SD3	8	1	---- ---	2128 936	2128 936
9-64-24	BRACKET, Engine Front Support Insulator, Right	6	1	2264 668		
	Left	6	1	2265 023		
	Right	6	1	---- ---	2264 678	
	Left	6	1	---- ---	2264 679	

NOTE 1: SP2 UP TO Serial No. 121109 Detroit Built, SD2 UP TO Serial No. 122934 Detroit Built. SP2 and SD2 UP TO Serial No. 124664 St. Louis Built.

NOTE 2: SP2 AFTER Serial No. 121109 Detroit Built, SD2 AFTER Serial No. 122934 Detroit Built. SP2 and SD2 AFTER Serial No. 124664 St. Louis Built.

MyMopar.com

CODE	PART NAME AND DESCRIPTION	CYL.	PER CAR	VALIANT LANCER	PLYMOUTH DODGE	CHRYSLER IMPERIAL
9-64-0	**ENGINE FRONT SUPPORT - Cont'd**					
9-64-24	BRACKET, SP2 and SD2 w/318 cu. in. Eng., AFTER	8	2	---- ---	2402 185(1)	
	Right, except 318 cu. in. Eng.	8	1	---- ---	*2268 220	
	Left, except 318 cu. in. Eng.	8	1	---- ---	*2268 216	
	Left, SC3	8	1	---- ---	---- ---	2401 037
9-64-25	ADAPTER, Engine Front Support Insulator, Right, SP2 and SD2 w/318 cu. in. Eng., AFTER, SP2 and SD2 w/361 cu. in. Eng.	8	1	---- ---	2268 221(2)	
	Left, SP2 and SD2 w/318 cu. in. Eng., SP2 and SD2 w/361 cu. in. Eng.	8	1	---- ---	2268 217(2)	
9-67-0	**ENGINE FRONT SUPPORT INSULATOR**					
9-67-4	INSULATOR, Right	6	1	2264 140		
	Left	6	1	2265 018		
	Right	6	1	---- ---	2264 674	
	Left	6	1	---- ---	2264 675	
	Right, SP2 and SD2 w/361 cu. in. Eng., UP TO	8	1	---- ---	2268 213(1)	
	Left, SP2 and SD2 w/361 cu. in. Eng., UP TO	8	1	---- ---	2268 212(1)	
	Right, SP2 and SD2 w/318 and 361 cu. in. Eng., AFTER	8	1	---- ---	2402 182(2)	
	Left, SP2 and SD2 w/318 and 361 cu. in. Eng., AFTER	8	1	---- ---	2402 183(2)	
	Right, w/413 cu. in. Eng.	8	1	---- ---	*2402 182	
	Left, w/413 cu. in. Eng.	8	1	---- ---	*2402 183	
	WASHER, Engine Front Support Insulator	8	4	---- ---	*6022 191	
9-69-0	**FRAME ENGINE REAR SUPPORT CROSSMEMBER**					
9-69-4	CROSSMEMBER, Frame Transmission Mounting also Engine Rear Support	6	1	*2260 608		
		6	1	---- ---	*2265 423	
	w/318 cu. in. Engine, UP TO	8	1	---- ---	*2204 226(1)	
	w/318 cu. in. Engine, AFTER	8	1	---- ---	*2265 423(2)	
	Except 318 cu. in. Engine	8	1	---- ---	*2265 423	
	w/Std. Trans., SD3, SC1, SC2	8	1	---- ---	*2122 578	*2122 578
	w/Automatic Trans., SD3, SC1, SC2	8	1	---- ---	2265 408	2265 408
	SC3	8	1	---- ---	---- ---	2265 409
	SY1 except Cv. Cp.	8	1	---- ---	---- ---	2265 420
	SY1 Cv. Cp.	8	1	---- ---	---- ---	2265 418
	w/o Bracket, SY1 Cv. Cp.	8	1	---- ---	---- ---	1940 304
9-69-6	BRACKET, Right, SY1 Cv. Cp.	8	1	---- ---	---- ---	1940 300
	Left, SY1 Cv. Cp.	8	1	---- ---	---- ---	1940 301
9-70-0	**FRAME ENGINE REAR SUPPORT CROSSMEMBER BRACKET**					
9-70-9	NUT, Frame Engine Rear Support Crossmember to Bracket Bolt, SD3, SC1, SC2, SC3	8	4	---- ---	1946 141	1946 141
9-71-0	**ENGINE REAR SUPPORT INSULATOR**					
9-71-5	INSULATOR	6	1	2265 836		
		6	1	---- ---	2265 826	
	SP2 and SD2 w/318 cu. in. Eng., UP TO, SD3, SC1, w/Automatic Trans., SC2 w/Automatic Trans., SC3 w/Automatic Trans.	8	1	---- ---	2201 990(1)	2201 990

NOTE 1: SP2 UP TO Serial No. 121109 Detroit Built, SD2 UP TO Serial No. 122934 Detroit Built, SP2 and SD2 UP TO Serial No. 124664 St. Louis Built.

NOTE 2: SP2 AFTER Serial No. 121109 Detroit Built, SD2 AFTER Serial No. 122934 Detroit Built. SP2 and SD2 AFTER Serial No. 124664 St. Louis Built.

★ Indicates use as required. Numerals in parentheses ( ) refer to notes. Printed in U.S.A.
⊟ Indicates parts not listed in any previous parts book. Prices and specifications subject to change without notice.
* Indicates change or addition. March 8, 1963.

MyMopar.com

CODE	PART NAME AND DESCRIPTION	CYL.	PER CAR	VALIANT LANCER	PLYMOUTH DODGE	CHRYSLER IMPERIAL
9-71-0	**ENGINE REAR SUPPORT INSULATOR - Cont'd**					
9-71-5	INSULATOR - Cont'd					
	SP2 and SD2 w/318 cu.in.Eng., AFTER, SP2 and SD2 w/361 cu. in. Eng.	8	1	---- ---	2265 826(2)	
	SD3 w/Std. Trans., SC1 w/Std. Trans., SC2 w/Std. Trans.	8	1	---- ---	1734 529	1734 529
	SY1 w/Automatic Trans.	8	1	---- ---	---- ---	2206 979
	w/413 cu. in. Eng.	8	1	---- ---	⊟2401 653	
9-71-8	NUT, Engine Rear Support Insulator Stud, SP2 and SD2 w/318 cu.in. Eng., UP TO, SD3, SC1, SC2, SC3	8	1	---- ---	6022 805(1)	6022 805
	SP2 and SD2 w/318 cu.in.Eng., AFTER	8	2	---- ---	2129 684	
9-71-15	BUMPER	6	1	2206 965		
	Stop, SP2 and SD2 w/318 cu.in.Eng., UP TO, SD3	8	1	---- ---	2201 989	2201 989
	SD3 w/Std. Trans., SC1 w/Std. Trans., SC2 w/Std. Trans.	8	1	---- ---	2122 280	2122 280
	w/413 cu. in. Eng.	8	1	---- ---	⊟2206 965	
9-71-16	SPRING, SP2 and SD2 w/318 cu.in.Eng., UP TO, SD3 w/Automatic Trans., SC1 w/Automatic Trans., SC2 w/Automatic Trans., SC3 w/Automatic Trans.	8	1	---- ---	2201 991(1)	2201 991
	SC1 w/Std. Trans., SC2 w/Std. Trans.	8	1	---- ---	---- ---	2122 278
9-71-17	PLATE, Spring, SD3, SC1 w/Std. Trans., SC2 w/Std. Trans.	8	1	---- ---	2203 897	2203 897
9-71-18	STUD, w/WASHER, SP2 and SD2 w/318 cu.in. Eng., UP TO, SD3 w/Automatic Trans., SC1 w/Automatic Trans., SC2 w/Automatic Trans., SC3 w/Automatic Trans.	8	1	---- ---	2201 985(1)	2201 985
	SD3 w/Std. Trans., SC1 w/Std. Trans., SC2 w/Std. Trans.	8	1	---- ---	2122 275	2122 275
9-71-19	WASHER, Stud, Upper, SD3 w/Std. Trans., SC1, w/Std. Trans., SC2 w/Std. Trans.	8	1	---- ---	2122 279	2122 279

NOTE 1: SP2 UP TO Serial No. 121109 Detroit Built, SD2 UP TO Serial No. 122934 Detroit Built, SP2 and SD2 UP TO Serial No. 124664 St. Louis Built.

NOTE 2: SP2 AFTER Serial No. 121109 Detroit Built, SD2 AFTER Serial No. 122934 Detroit Built. SP2 and SD2 AFTER Serial No. 124664 St. Louis Built.

NOTES

MyMopar.com

GROUP 10 - ENGINE OILING

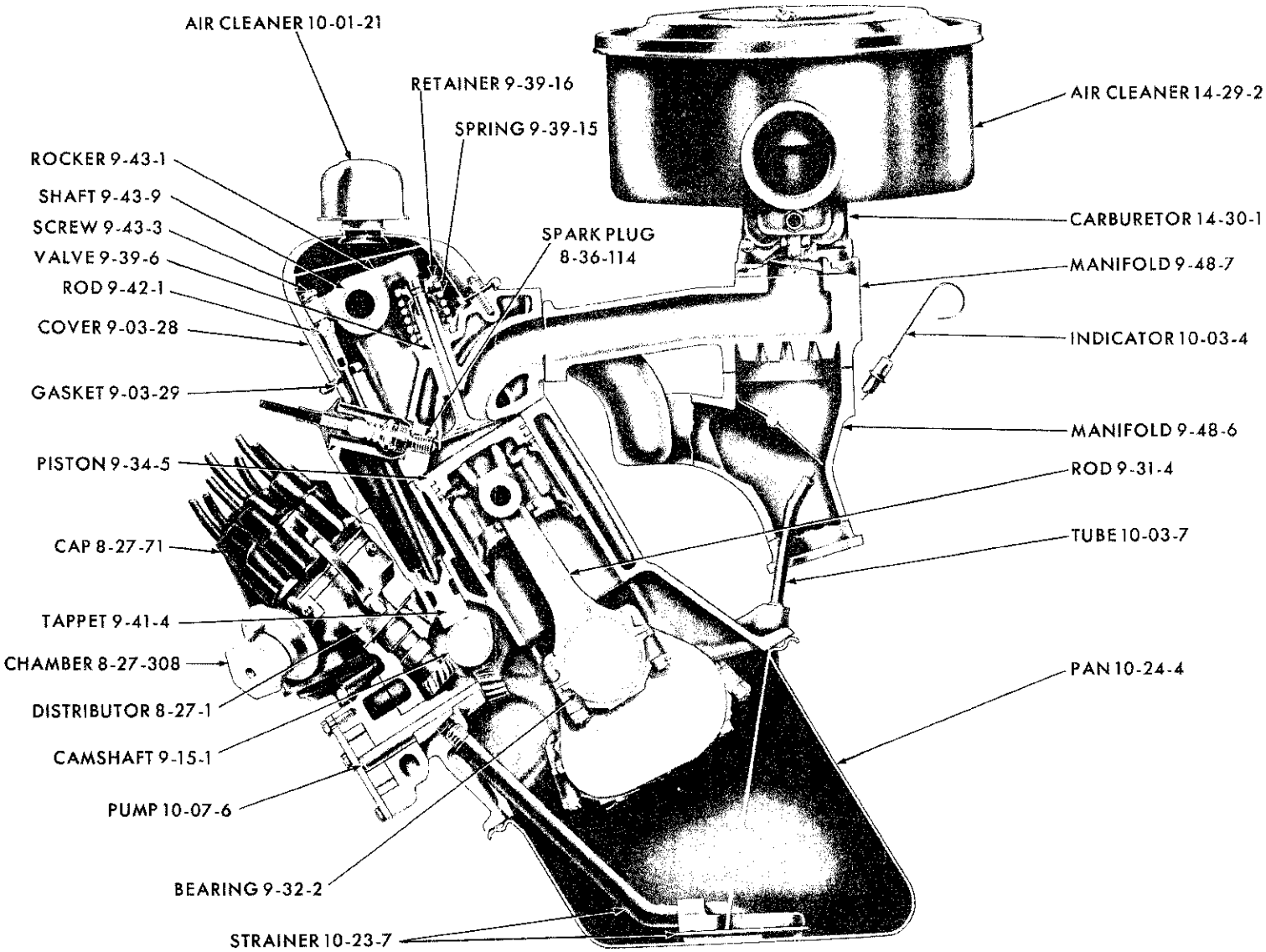

ENGINE OILING - 6 CYLINDER

MyMopar.com

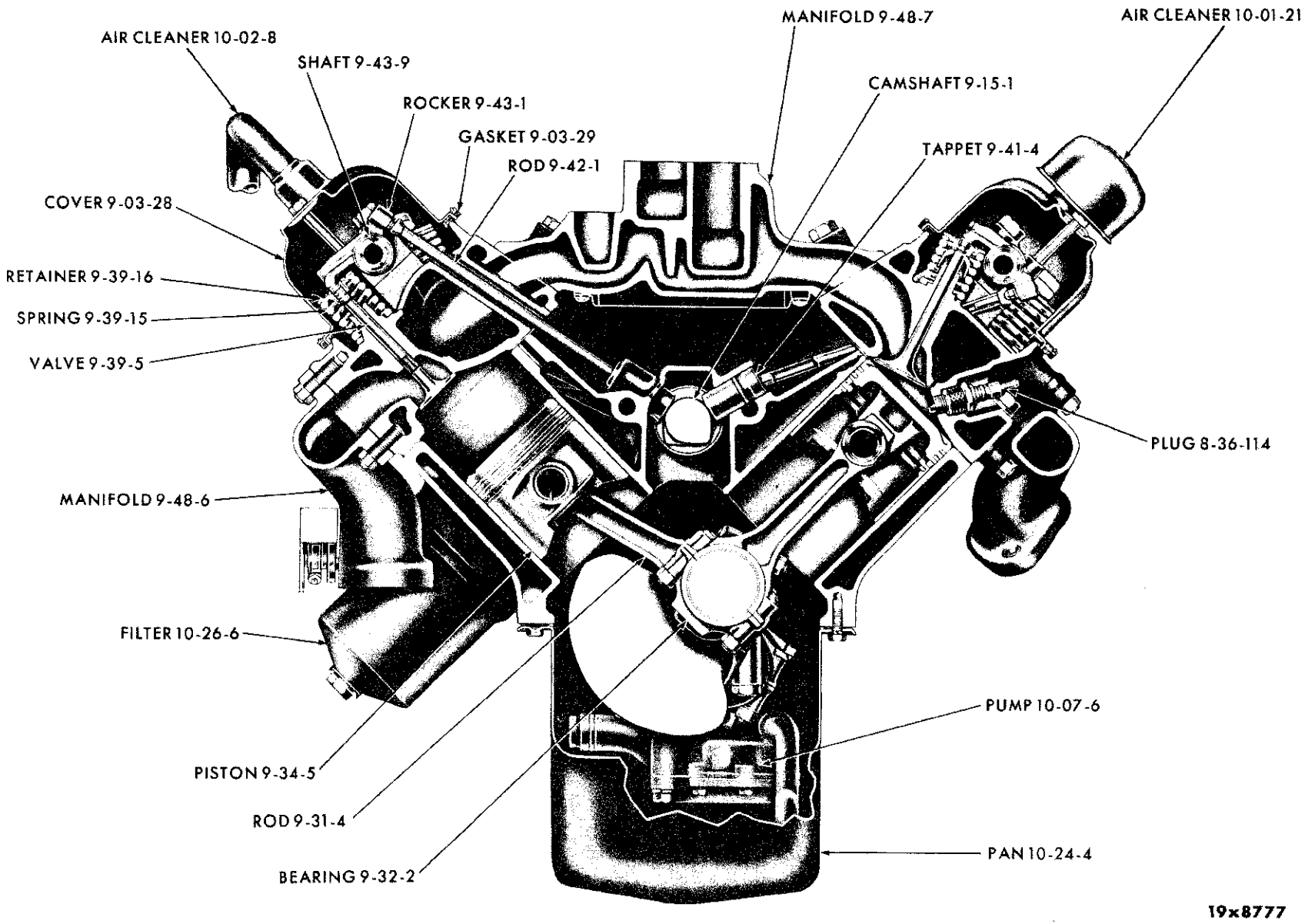

ENGINE OILING - V8 CYLINDER (STANDARD)

MyMopar.com

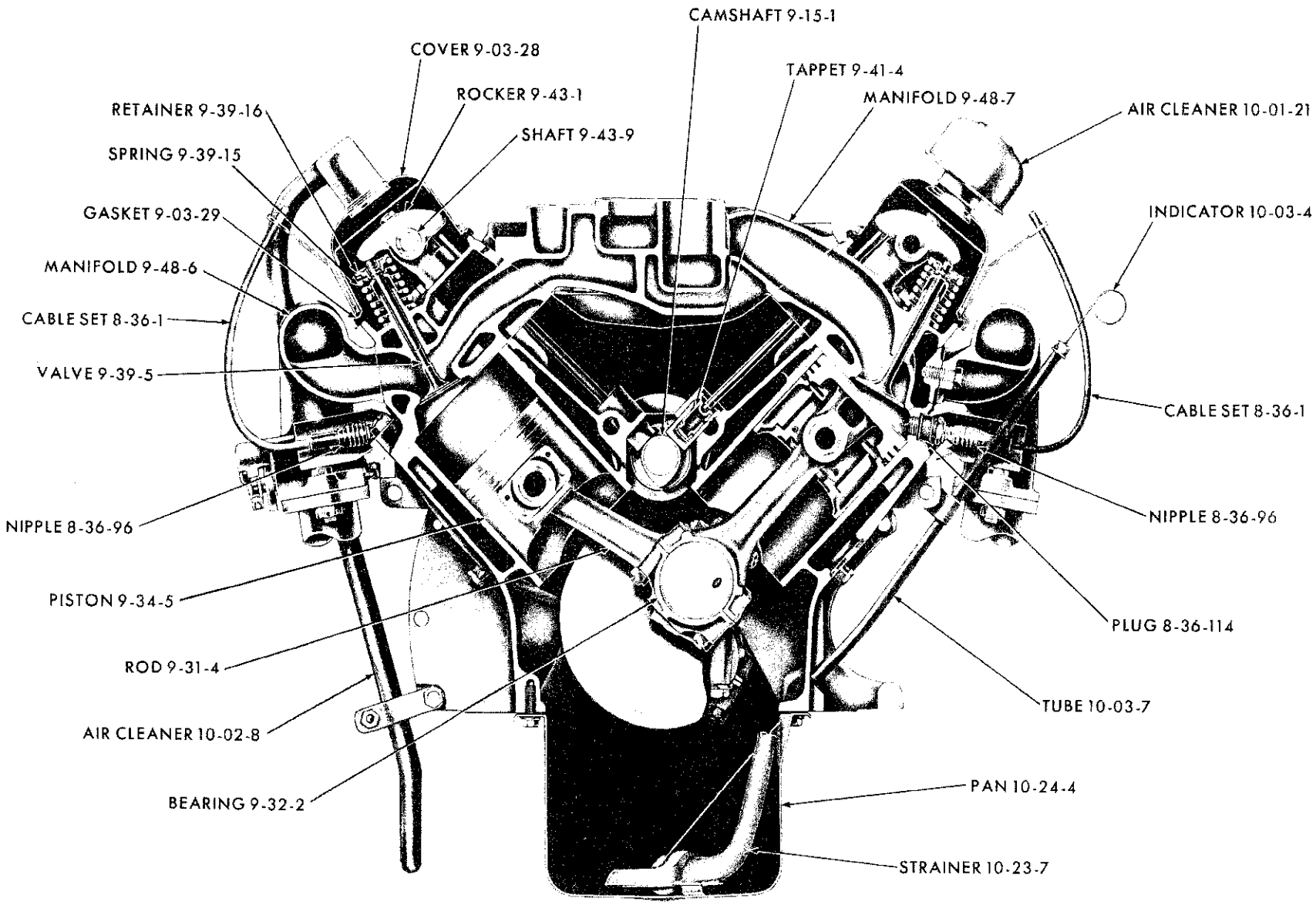

ENGINE OILING - V8 CYLINDER (HIGH PERFORMANCE)

MyMopar.com

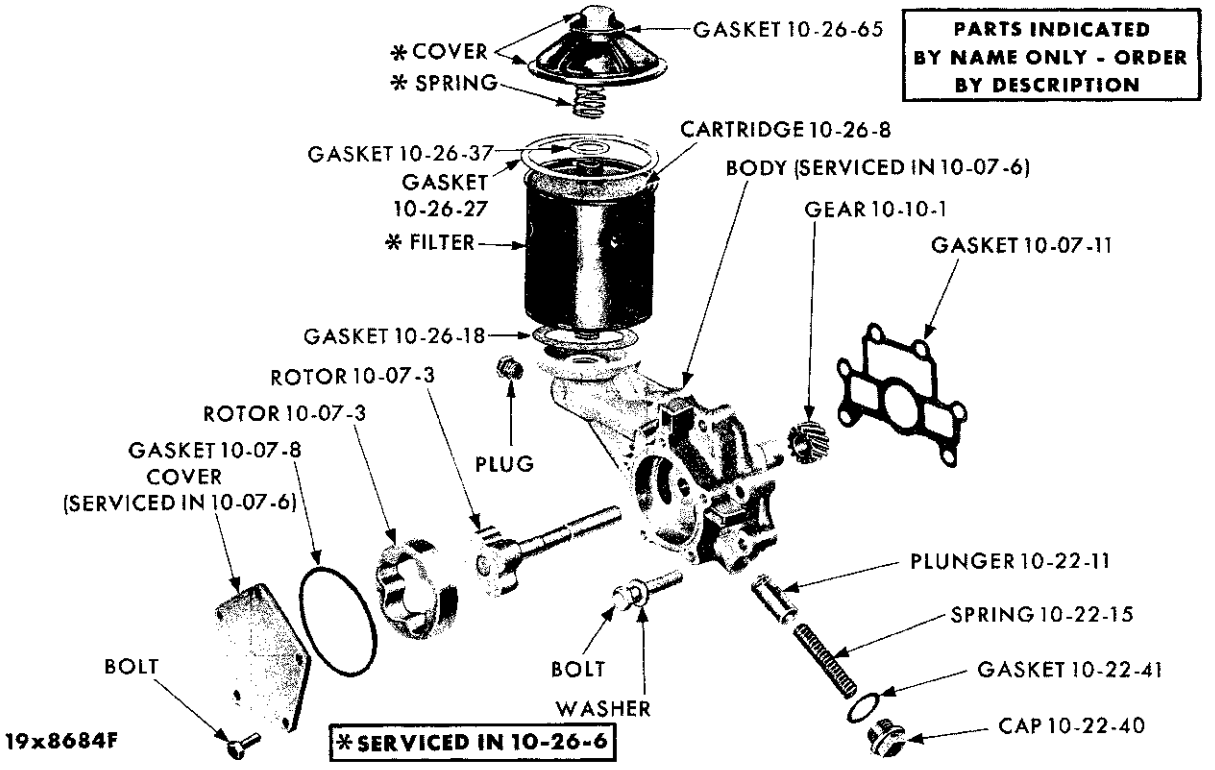

OIL PUMP AND FILTER - 6 CYLINDER

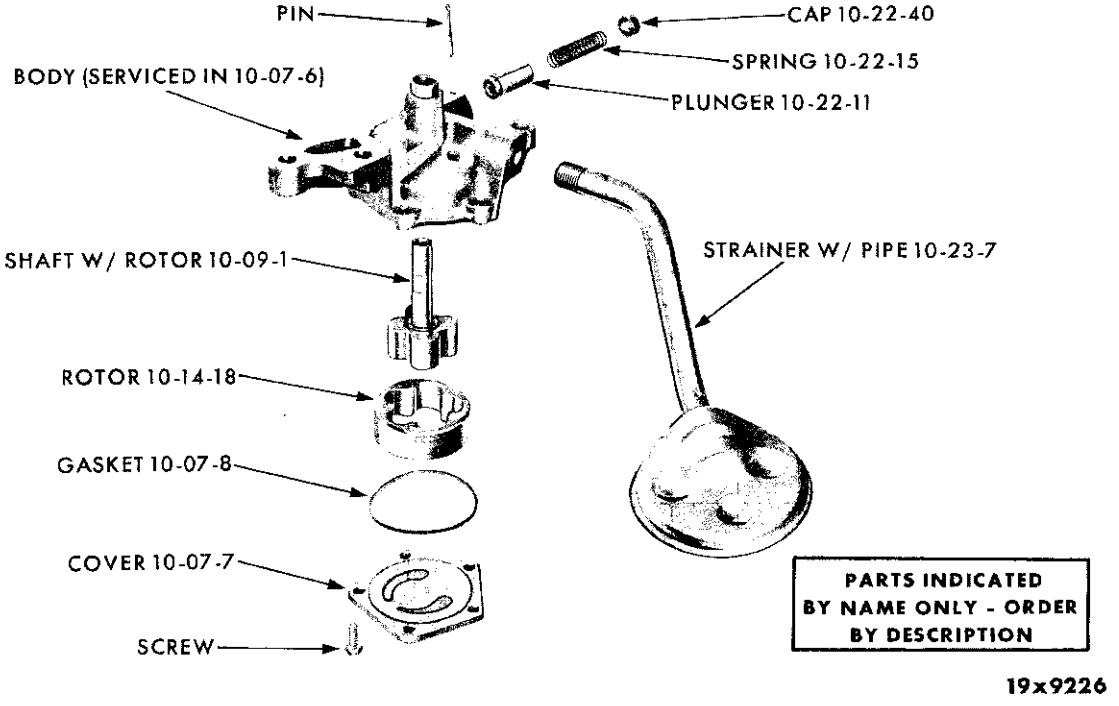

OIL PUMP (V8 CYLINDER) - PLYMOUTH SP2 AND DODGE SD2 (WITHOUT HIGH PERFORMANCE)

MyMopar.com

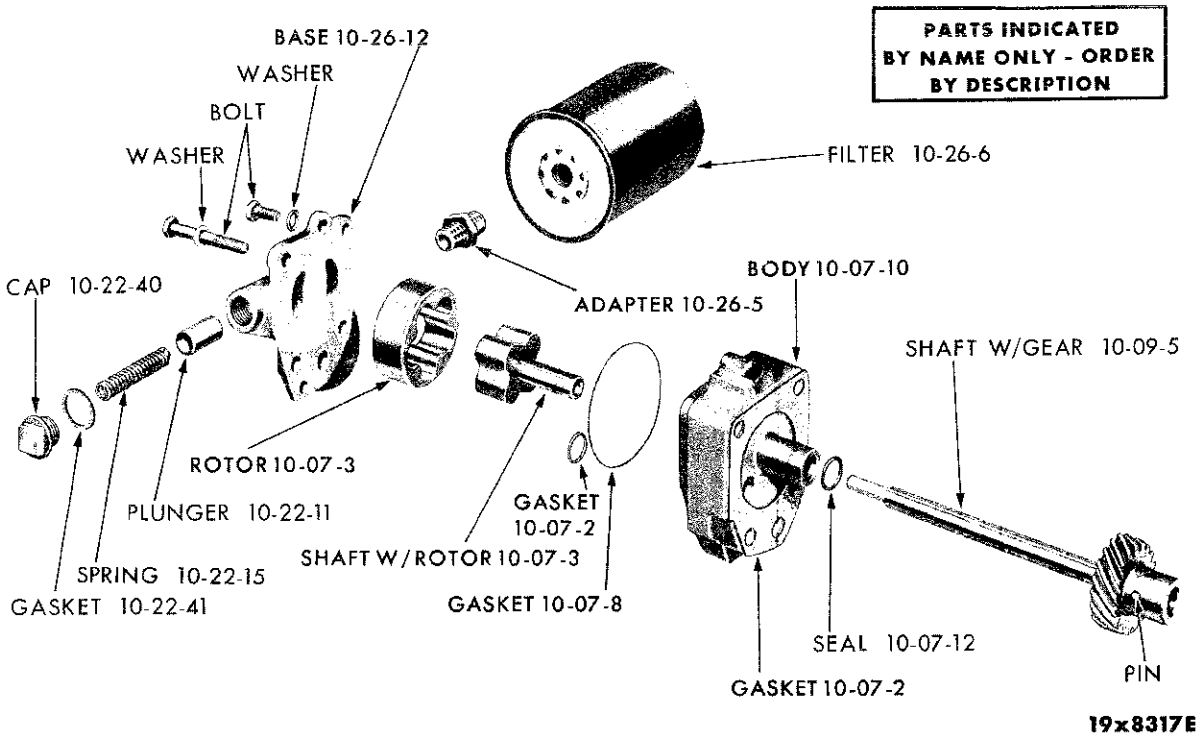

OIL PUMP - "B" ENGINE (HIGH PERFORMANCE)

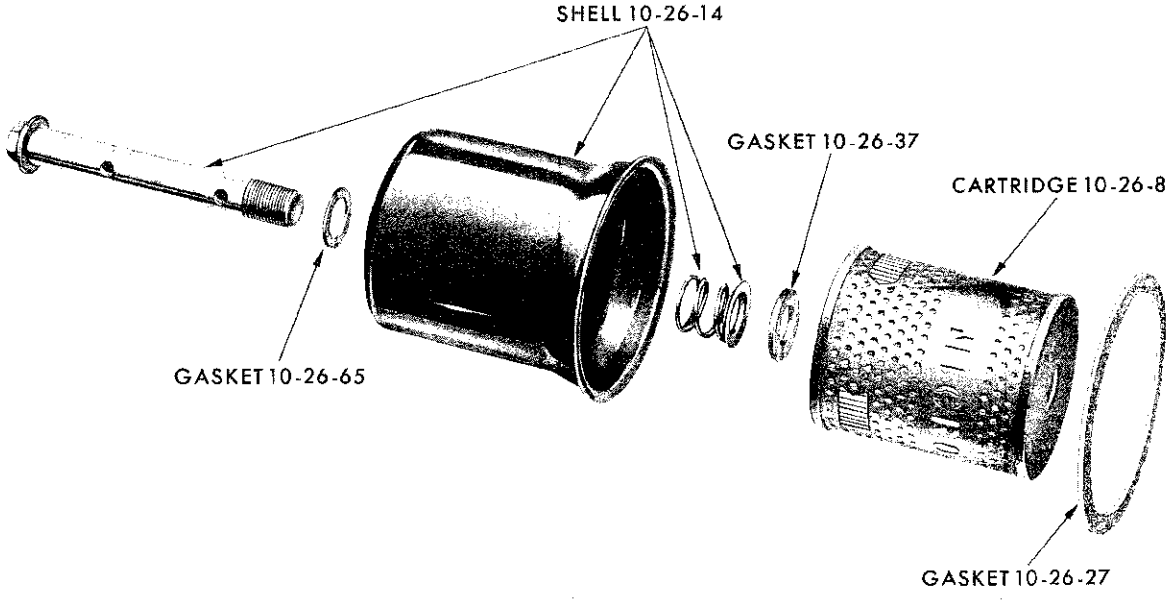

OIL FILTER - "A" ENGINE (318 CU. IN.)

MyMopar.com

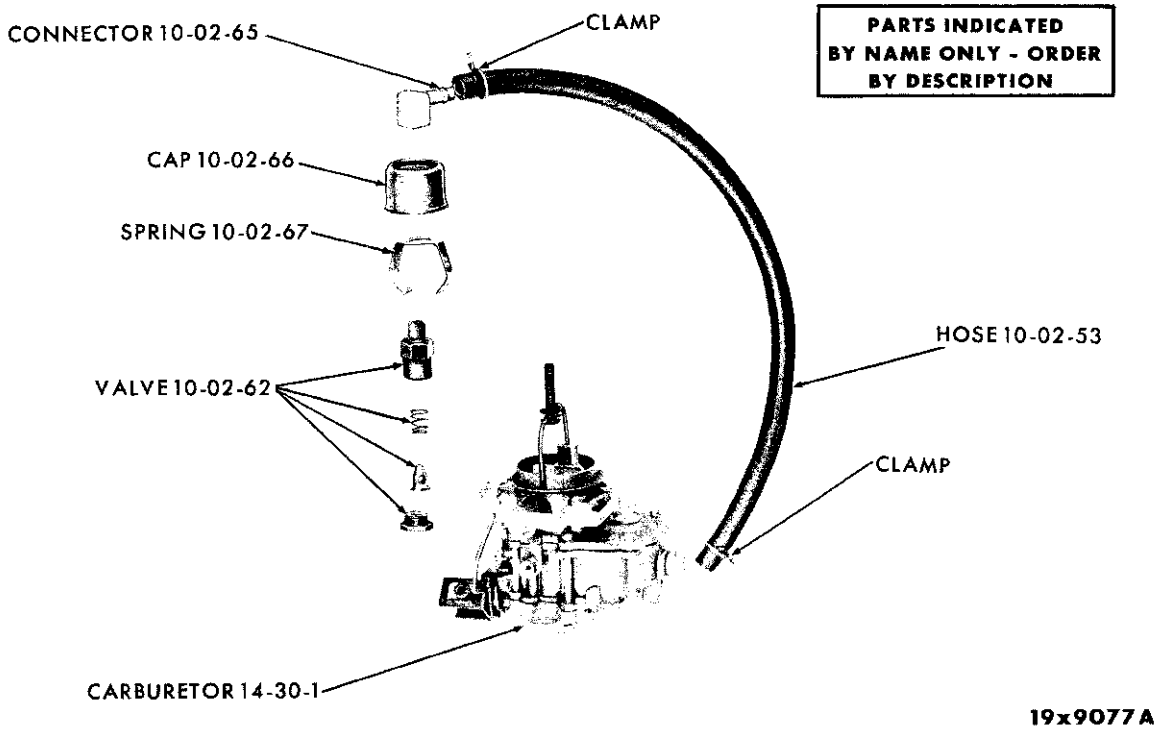

CRANKCASE - CLOSED VENT SYSTEM

NOTES

MyMopar.com

CODE	PART NAME AND DESCRIPTION	CYL.	PER CAR	VALIANT LANCER	PLYMOUTH DODGE	CHRYSLER IMPERIAL
10-01-0	**CRANKCASE BREATHER PIPE INLET**					
10-01-21	AIR CLEANER, Inlet, Std.		1	*1821 198	*1821 198	*1821 198
	Heavy Duty		1	*1821 200	*1821 200	*1821 200
10-02-0	**CRANKCASE VENTILATOR OUTLET**					
10-02-8	AIR CLEANER, SP2, SD2 w/361 cu. in. Eng. and Police Cars, SP2, SD2 Heavy Duty and Taxi	8	1	---- ---	1825 922	
10-02-15	PIPE, use w/o Air Cleaner, SP1, SD1 Taxi	6	1	2128 567	2128 567	
	Use w/Air Cleaner, SP1, SD1 Taxi	6	1	2128 625	2128 625	
	Use w/o Air Cleaner, SV1, SL1 w/225 cu. in. Eng.	6	1	2128 568	2128 568	
	Use w/Air Cleaner, SP1, SD1 Heavy Duty and Taxi	6	1	---- ---	2128 626	
	Use w/o Air Cleaner, SP2, SD2, except SD3	8	1	---- ---	2205 622	
	Use w/Air Cleaner, SP2 Heavy Duty and Taxi, SD2 Taxi, except SD3	8	1	---- ---	2205 621	
	Use w/o Air Cleaner w/361 cu. in. Eng., except SD3	8	1	---- ---	2203 085	
	Use w/Air Cleaner, SP2, SD2 w/361 cu. in. Eng. and Police Cars, except SD3	8	1	---- ---	2206 407	
	Use w/o Air Cleaner, SD3	8	1	---- ---	1852 057	1852 057
10-02-24	ELBOW, Crankcase Vent Hose, to Intake Manifold, Closed Vent System, SC2 w/413 cu. in. Eng.	8	1	---- ---	---- ---	2264 754
10-02-53	HOSE, Crankcase Vent, Valve to Carburetor (sold by the inch)		★	*1064 541	*1064 541	*1064 541
10-02-62	VALVE, Vent, Closed Vent System w/170 cu. in. Eng.	6	1	2205 957		
	w/225 cu. in. Eng.	6	1	2264 344	2264 344	
		8	1	---- ---	2264 344	2264 344
10-02-65	CONNECTOR, Vent Valve, Closed Vent System		1	2203 118	2203 118	2203 118
10-02-66	CAP, Vent Valve, Closed Vent System		1	2203 116	2203 116	2203 116
10-02-67	SPRING, Valve Cap, Closed Vent System		1	2203 117	2203 117	2203 117
10-03-0	**OIL LEVEL INDICATOR**					
10-03-4	INDICATOR, w/170 cu. in. Eng.	6	1	2121 569		
	w/225 cu. in. Eng.	6	1	2206 319		
		6	1	---- ---	2264 092	
	w/318 cu. in. Eng.	8	1	---- ---	2202 921	
	w/361 and 383, cu. in. Eng., except SD3	8	1	---- ---	*2402 227	
	w/413 cu. in. Eng.	8	1	---- ---	⊟2463 186	
	SD3	8	1	---- ---	1858 907	1858 907
10-03-7	TUBE	6	1	1859 788	1859 788	
	w/318 cu. in. Eng.	8	1	---- ---	1859 788	
	w/361 and 383, cu. in. Eng.	8	1	---- ---	*1944 652	*1944 652
	w/413 cu. in. Eng.	8	1	---- ---	⊟2402 311	
10-07-0	**OIL PUMP**					
10-07-2	GASKET and SEAL PACKAGE	8	1	---- ---	*2084 355	*2084 355
10-07-3	SHAFT and ROTOR PACKAGE	6	1	2084 415	2084 415	
	w/361, 383 and 413 cu. in. Eng.	8	1	---- ---	*2084 354	*2084 354

★ Indicates use as required. Numerals in parentheses ( ) refer to notes. Printed in U.S.A.
⊟ Indicates parts not listed in any previous parts book. Prices and specifications subject to change without notice.
* Indicates change or addition. March 8, 1963 Supersedes May 1, 1962.

MyMopar.com

CODE	PART NAME AND DESCRIPTION	CYL.	PER CAR	VALIANT LANCER	PLYMOUTH DODGE	CHRYSLER IMPERIAL
10-07-0	**OIL PUMP - Cont'd**					
10-07-6	PUMP	6	1	1947 221	1947 221	
	w/318 cu. in. Eng.	8	1	---- ---	2264 374	
	w/361, 383 and 413 cu. in. Eng.	8	1	---- ---	*2120 870	*2120 870
10-07-7	COVER, w/318 cu. in. Eng.	8	1	---- ---	2206 095	
10-07-8	GASKET, Cover		1	1737 727	1737 727	1737 727
10-07-10	BODY, w/361, 383 and 413 cu. in. Eng.	8	1	---- ---	*1737 718	*1737 718
10-07-11	GASKET, Body	6	1	2121 404	2121 404	
10-07-12	SEAL, Body, w/361, 383 and 413 cu. in. Eng.	8	1	---- ---	*1855 328	*1855 328
10-07-14	SHIELD, Oil Pump Body Splash	6	1	2269 072	2269 072	
10-09-0	**OIL PUMP DRIVE SHAFT**					
10-09-1	SHAFT, w/Inner Rotor, w/318 cu. in. Eng.	8	1	---- ---	2121 530	
10-09-5	SHAFT, Oil Pump and Distributor Drive, w/GEAR,					
	w/318 cu. in. Eng.	8	1	---- ---	2121 535	
	w/361 and 383 cu. in. Eng.	8	1	---- ---	*1739 604	*1739 604
	w/413 cu. in. Eng.	8	1	---- ---	⊟2402 639	
10-09-7	BUSHING, w/318 cu. in. Eng.	8	1	---- ---	1324 281	
	w/361, 383 and 413 cu. in. Eng.	8	1	---- ---	*1737 725	*1737 725
10-10-0	**OIL PUMP DRIVE GEAR**					
10-10-1	GEAR	6	1	1947 225	1947 225	
10-14-0	**OIL PUMP ROTOR**					
10-14-18	ROTOR, Outer, w/318 cu. in. Eng.	8	1	---- ---	2121 531	
10-22-0	**OIL PRESSURE RELIEF VALVE**					
10-22-11	PLUNGER		1	2120 764	2120 764	2120 764
10-22-15	SPRING, Std., Red	6	1	1737 742	1737 742	
	Std., Red, w/318 cu. in. Eng.	8	1	---- ---	2264 587	
	Std., Red, w/361, 383 and 413 cu. in. Eng.	8	1	---- ---	*1737 742	*1737 742
	Light Gray, w/361, 383 and 413 cu. in. Eng.	8	1	---- ---	*1737 743	*1737 743
	Heavy Brown, w/361, 383 and 413 cu. in. Eng.	8	1	---- ---	*1737 744	*1737 744
10-22-16	DAMPER, Spring, w/361, 383 and 413 cu. in. Eng.	8	1	---- ---	*2202 845	*2202 845
10-22-40	CAP, Plunger	6	1	618 621	618 621	
	w/318 cu. in. Eng.	8	1	---- ---	2264 586	
	w/361, 383 and 413 cu. in. Eng.	8	1	---- ---	* 618 621	* 618 621
10-22-41	GASKET, Cap		1	618 622	618 622	618 622
10-23-0	**OIL STRAINER**					
10-23-7	STRAINER, w/PIPE, w/170 cu. in. Eng.	6	1	2121 702		
	w/225 cu. in. Eng.	6	1	2206 317		
		6	1	---- ---	2206 261	
	w/318 cu. in. Eng.	8	1	---- ---	2206 381	
	w/361 cu. in. Eng., except SD3	8	1	---- ---	*2206 458	
	STRAINER, w/o Pipe, w/413 cu. in. Eng.	8	1	---- ---	⊟2406 188	
	STRAINER and PIPE PACKAGE, w/413 cu. in. Eng.	8	1	---- ---	⊟2448 382	
	SD3	8	1	---- ---	1859 947	1859 947

★ Indicates use as required. Numerals in parentheses ( ) refer to notes. Printed in U.S.A.
⊟ Indicates parts not listed in any previous parts book. Prices and specifications subject to change without notice.
March 8, 1963 Supersedes May 1, 1962. * Indicates change or addition.

MyMopar.com

CODE	PART NAME AND DESCRIPTION	CYL.	PER CAR	VALIANT LANCER	PLYMOUTH DODGE	CHRYSLER IMPERIAL
10-24-0 OIL PAN						
10-24-1	GASKET SET	6	1	2240 647	2240 647	
	w/318 cu. in. Eng.	8	1	---- ---	1879 520	
10-24-4	PAN, w/Drain PLUG, w/170 cu. in. Eng.	6	1	2268 446		
	w/Drain PLUG, w/225 cu. in. Eng.	6	1	2268 449		
	w/o Drain Plug	6	1	---- ---	2206 463	
	w/Drain PLUG, w/318 cu. in. Eng.	8	1	---- ---	2206 373	
	w/o Drain Plug, w/361 cu. in., except SD3	8	1	---- ---	*2206 455	
	w/o Drain Plug, w/413 cu. in. Eng.	8	1	---- ---	⊟2402 307	
	w/Drain PLUG, SD3	8	1	---- ---	2268 459	2268 459
10-24-8	GASKET, w/361, 383 and 413 cu. in. Eng.	8	1	---- ---	*1737 770	*1737 770
10-24-23	SCREW, Pan Attaching	6	22	1947 953	1947 953	
		8	18	---- ---	1947 953	1947 953
	To Bearing Seal Retainer	6	2	1343 212	1343 212	
		8	2	---- ---	2121 573	2121 573
10-24-37	PLUG, Drain, 1/2"-20 x 3/4"		1	2268 564	2268 564	2268 564
10-24-38	GASKET, Drain Plug 1/2" I. D. - 7/8" O. D.		1	2268 513	2268 513	2268 513
10-26-0 OIL FILTER						
10-26-5	ADAPTER, Base to Filter		1	1739 619	1739 619	1739 619
10-26-6	FILTER, Replaceable Cartridge Type, including Cartridge	6	1	2128 548	2128 548	
	Sealed Can Type, w/Built-In Gasket		1	1851 658	1851 658	1851 658
10-26-8	CARTRIDGE	6	1	2129 023	2129 023	
	w/318 cu. in. Eng.	8	1	---- ---	2129 023	
10-26-12	BASE, w/361, 383 and 413 cu. in. Eng.	8	1	---- ---	*2120 866	*2120 866
10-26-14	SHELL, w/NUT, SPRING and STUD, w/318 cu. in. Eng.	8	1	---- ---	1557 573	
10-26-18	GASKET, Oil Filter Body	6	1	2268 870	2268 870	
10-26-27	GASKET, Cover	6	1	2129 024	2129 024	
	w/318 cu. in. Eng.	8	1	---- ---	1557 575	
10-26-37	GASKET, Spring Retainer, w/318 cu. in. Eng.	8	1	---- ---	1557 584	
10-26-46	STANDPIPE, w/VALVE, use w/Sealed Can Type Filter only	6	1	2402 607	2402 607	
10-26-65	GASKET, Oil Filter Tube Cap	6	1	2202 435	2202 435	
	w/318 cu. in. Eng.	8	1	---- ---	1557 581	

NOTES

★ Indicates use as required.
⊟ Indicates parts not listed in any previous parts book.
* Indicates change or addition.

Numerals in parentheses ( ) refer to notes.

Printed in U.S.A.
Prices and specifications subject to change without notice.
March 8, 1963 Supersedes May 1, 1962.

MyMopar.com

CODE	PART NAME AND DESCRIPTION	CYL.	PER CAR	VALIANT LANCER	PLYMOUTH DODGE	CHRYSLER IMPERIAL

NOTES

MyMopar.com

GROUP 11 - EXHAUST

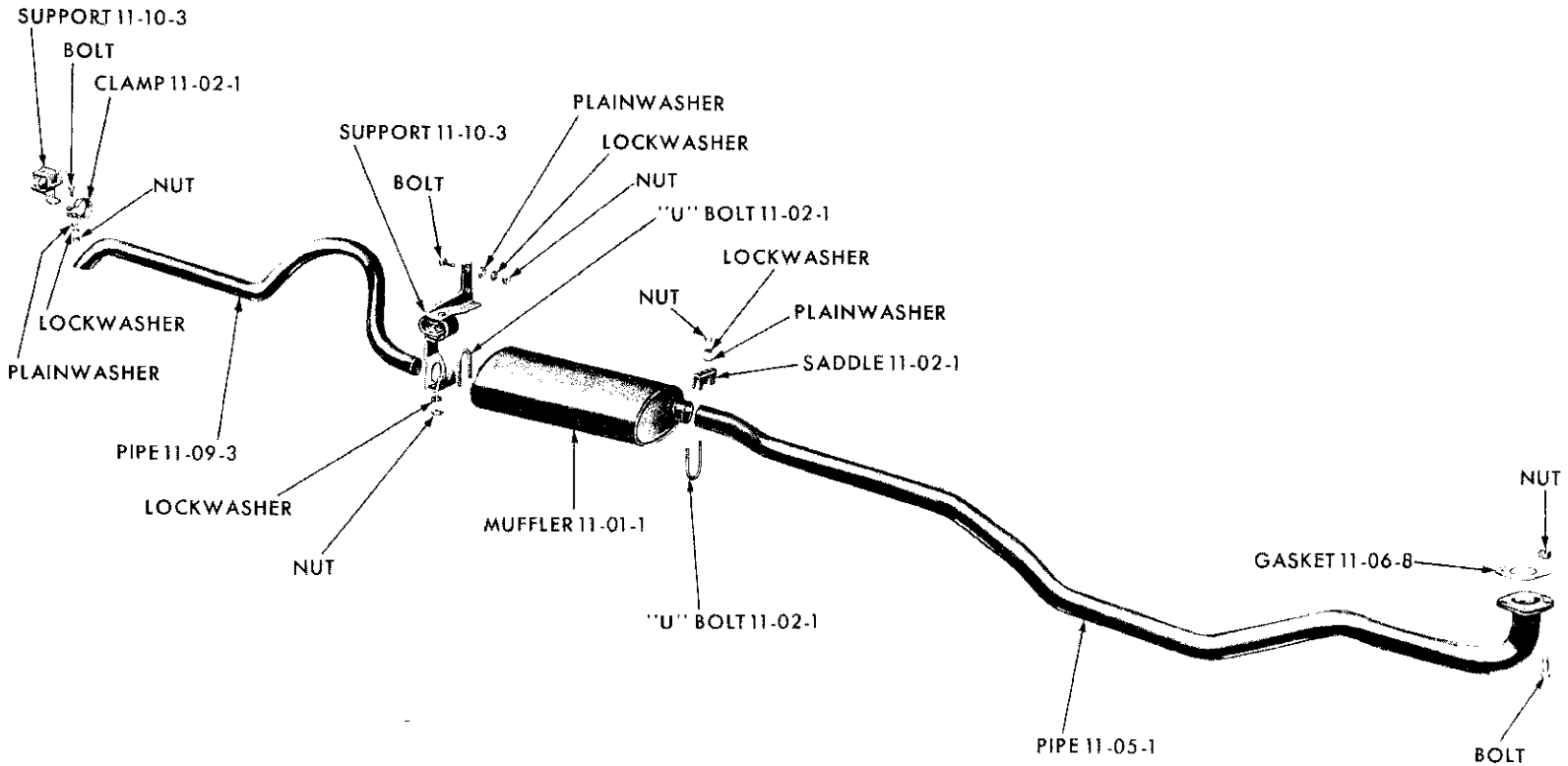

PARTS INDICATED BY NAME ONLY - ORDER BY DESCRIPTION

19x8644B

EXHAUST SYSTEM - PLYMOUTH SP1-2 AND DODGE SD1-2

MyMopar.com

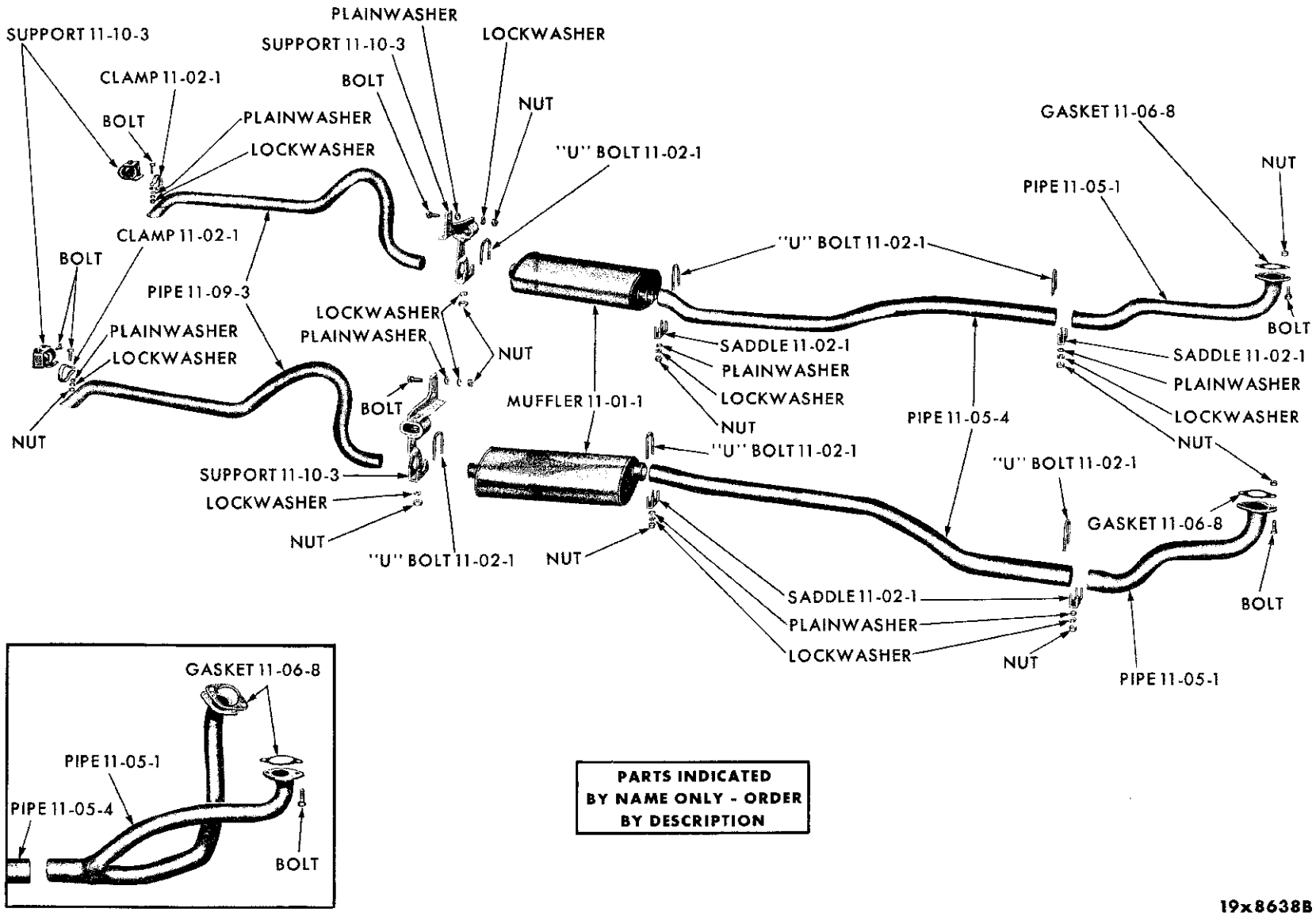

EXHAUST SYSTEM (V8 CYLINDER HIGH PERFORMANCE ENGINE) - PLYMOUTH SP1-2 AND DODGE SD1-2

MyMopar.com

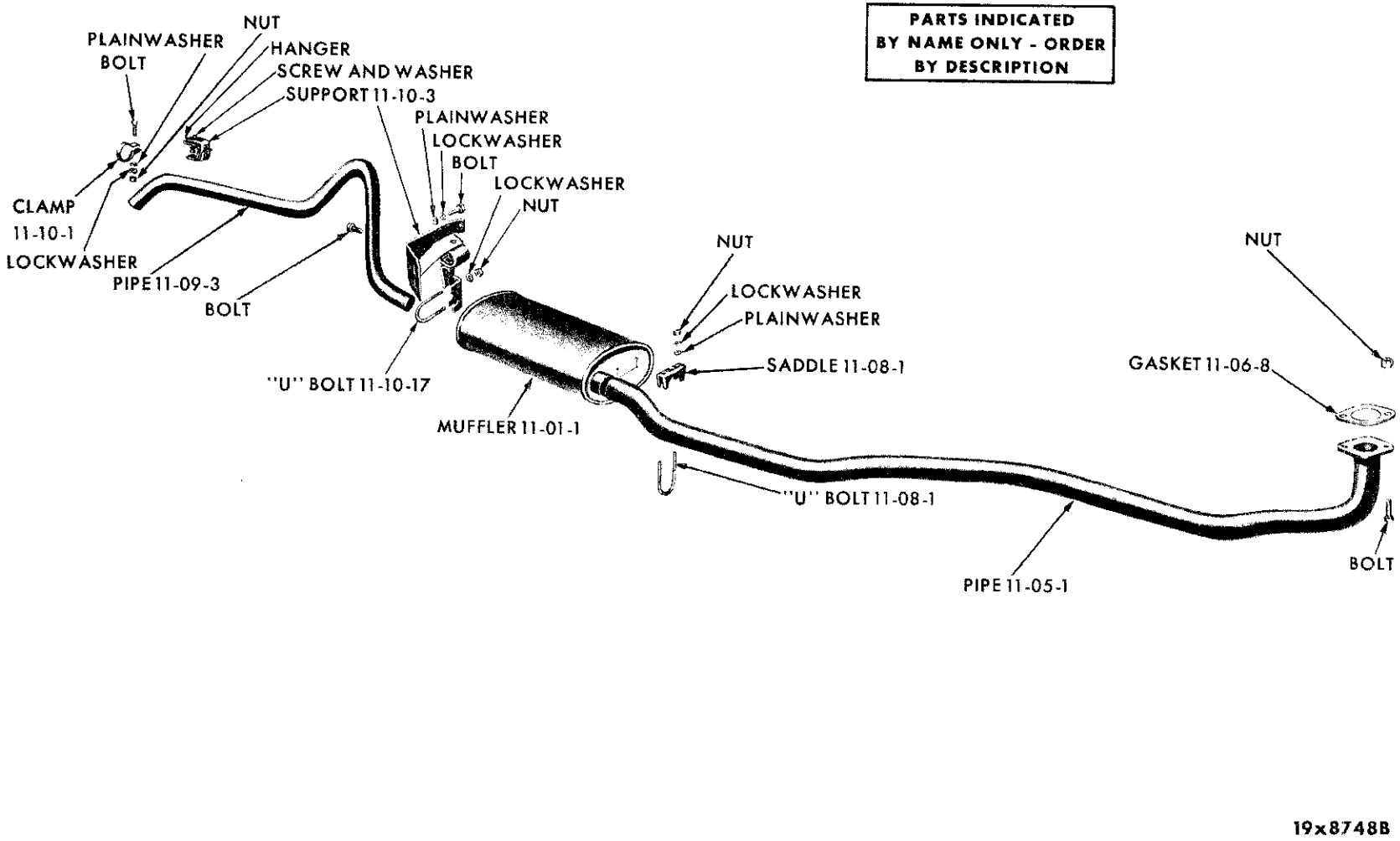

EXHAUST SYSTEM - VALIANT SV1 AND LANCER SL1

MyMopar.com

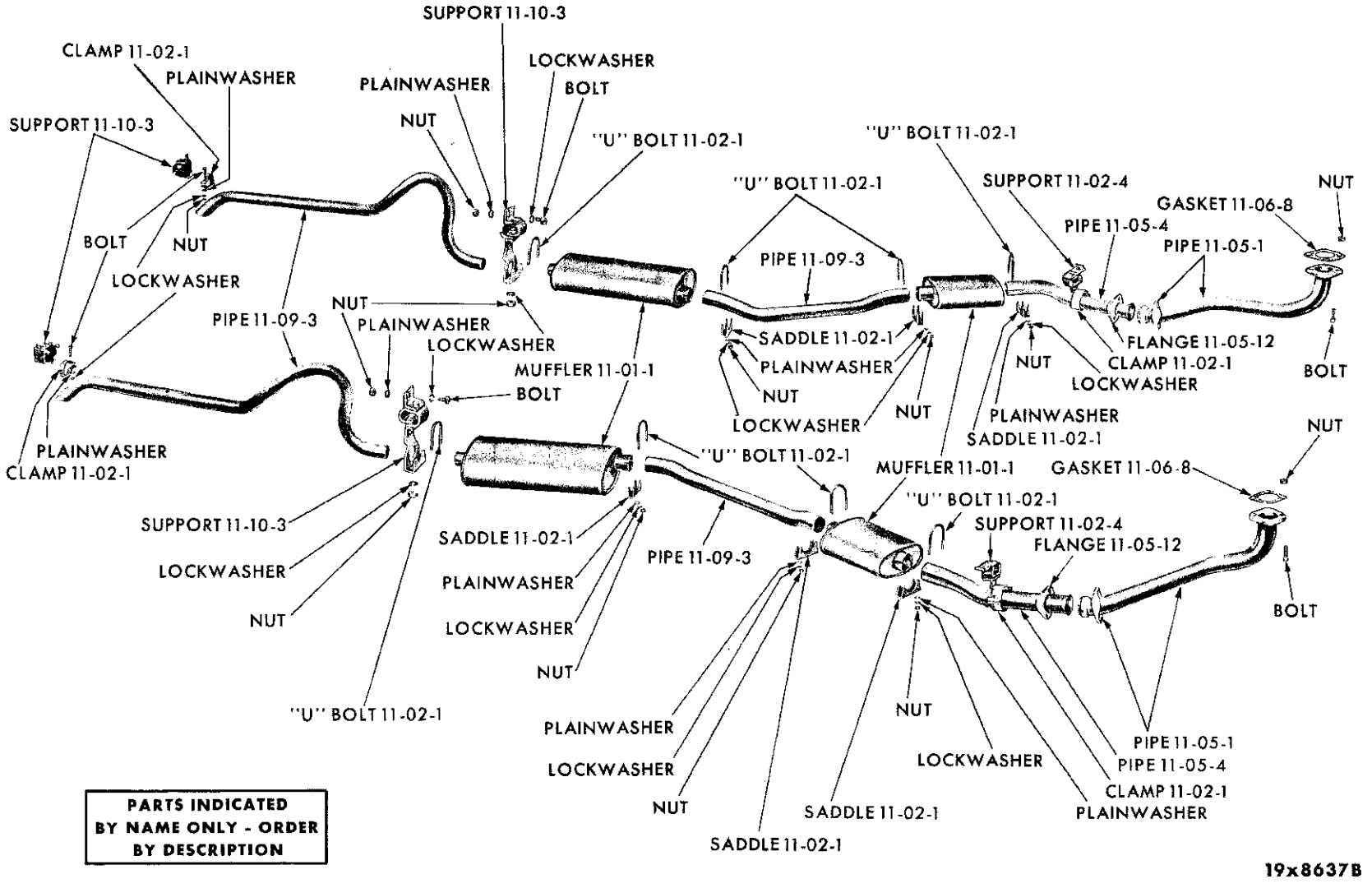

EXHAUST SYSTEM ("B" ENGINE) - CHRYSLER SC1-2-3

MyMopar.com

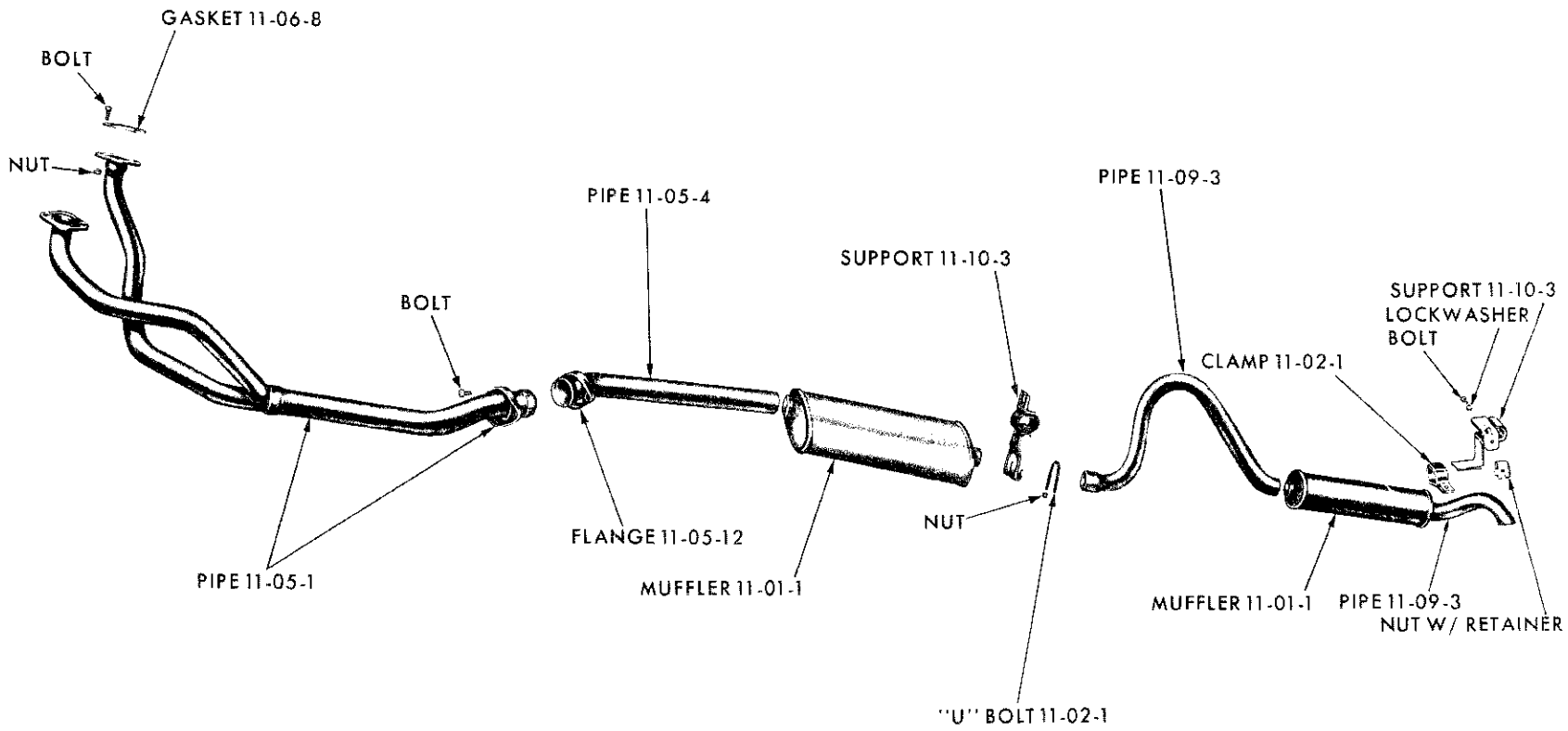

PARTS INDICATED BY NAME ONLY - ORDER BY DESCRIPTION

19x9098B

EXHAUST SYSTEM - CHRYSLER SC3 (EXCEPT SUBURBAN)

MyMopar.com

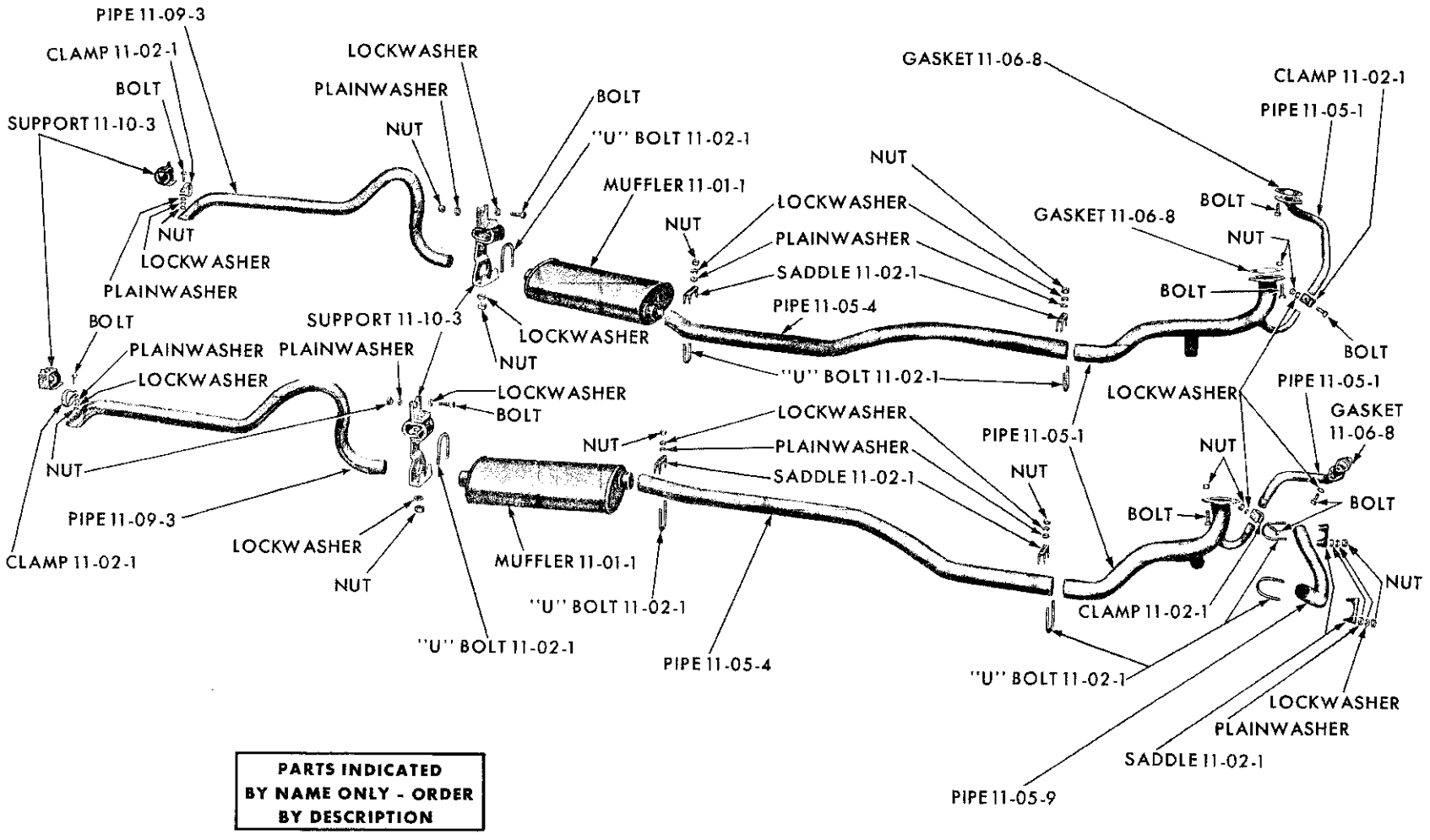

EXHAUST SYSTEM - CHRYSLER SC1-2-3 (RAM INDUCTION)

MyMopar.com

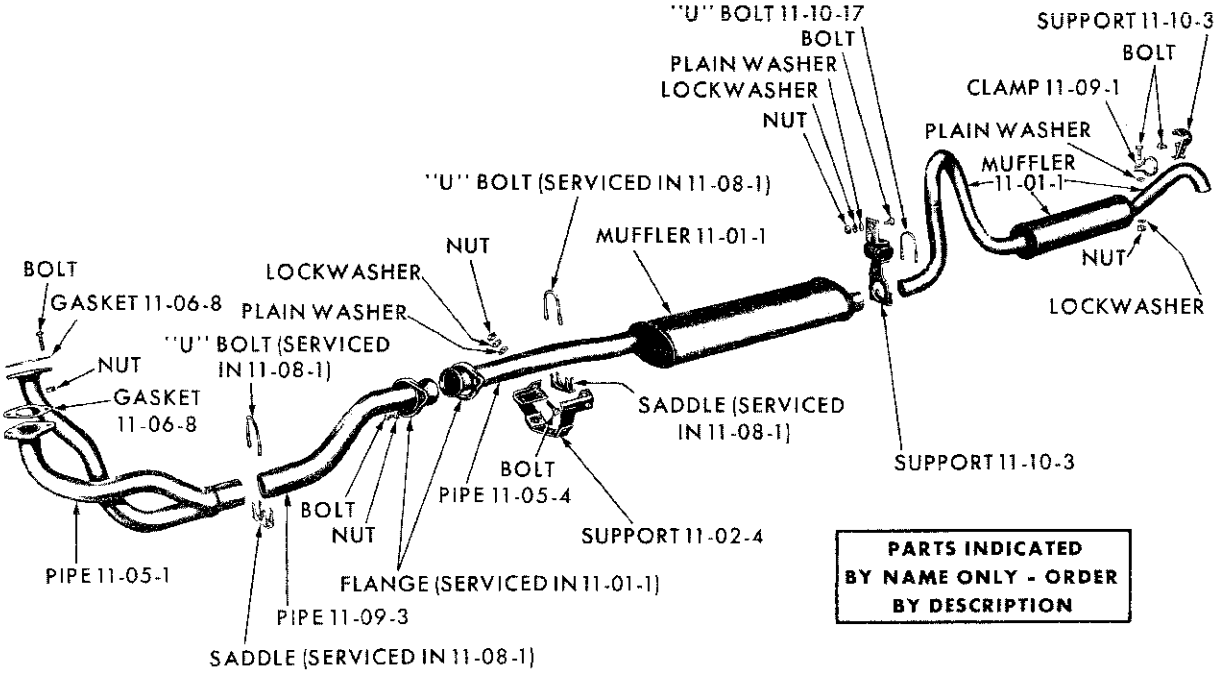

19x9169A

EXHAUST SYSTEM - IMPERIAL SY1

NOTES

MyMopar.com

CODE	PART NAME AND DESCRIPTION	CYL.	PER CAR	VALIANT LANCER	PLYMOUTH DODGE	CHRYSLER IMPERIAL

NOTES

★ Indicates use as required.
⊟ Indicates parts not listed in any previous parts book.

Printed in U.S.A.
Prices and specifications subject to change without notice.

MyMopar.com

CODE	PART NAME AND DESCRIPTION	CYL.	PER CAR	VALIANT LANCER	PLYMOUTH DODGE	CHRYSLER IMPERIAL
11-01-0	**MUFFLER**					
	SINGLE EXHAUST					
11-01-1	MUFFLER, Zinc Coated	6	1	2208 370	*2298 913	
	Aluminized	6	1	2266 039	2265 986	
	Zinc Coated, SD3, SC1, SC2	8	1	---- ---	2208 406	2208 406
	Aluminized, SD3, SC1, SC2	8	1	---- ---	2122 833	2122 833
	Front, Zinc Coated, SC3	8	1	---- ---	---- ---	2208 406
	Front, Aluminized, SP2, SD2, SC3	8	1	---- ---	2265 988	2122 833
	Zinc Coated, SP2, SD2	8	1	---- ---	2298 915	
	Front, SY1 except Cv. Cp	8	1	---- ---	---- ---	2265 974
	Rear, SC3, w/Tail PIPE	8	1	---- ---	---- ---	2201 418
	Rear, SY1 except Cv. Cp., w/Front and Rear Tail PIPE	8	1	---- ---	---- ---	*2265 964
	DUAL EXHAUST					
	Aluminized, w/318 cu. in. Eng.	8	2	---- ---	2265 987	
	Zinc Coated, w/318 cu. in. Eng.	8	2	---- ---	2298 914	
	Aluminized, w/361 cu. in. Eng., SP2, SD2	8	2	---- ---	2265 988	
	Zinc Coated, w/361 cu. in. Eng., SP2, SD2	8	2	---- ---	2298 915	
	Aluminized, SP2, SD2, SC2, w/413 cu. in. Eng.	8	2	---- ---	*2122 833	*2122 831
	Zinc Coated, SC2 w/413 cu. in. Eng.	8	2	---- ---	---- ---	2208 405
	Front, SC3	8	2	---- ---	---- ---	2122 835
	Front, SY1 Cv. Cp.	8	2	---- ---	---- ---	2122 795
	Rear, SC3	8	2	---- ---	---- ---	2122 834
	Rear, SY1 Cv. Cp	8	2	---- ---	---- ---	2123 470
11-02-0	**MUFFLER SUPPORT**					
11-02-1	CLAMP PACKAGE, Exhaust Pipe to Muffler	6	1	1843 009	1843 010	
	Exhaust Pipe Brace	6	1	---- ---	1843 010	
	Exhaust Pipe to Muffler, SP2, SD2	8	1	---- ---	1843 008	
	Exhaust Crossover Pipe, SP2, SD2	8	1	---- ---	1843 008	
	Exhaust Pipe Extension, SP2, SD2	8	★	---- ---	1843 008	1843 407
	Exhaust Pipe Extension, SD3	8	★	---- ---	1843 407	
	Exhaust Extension to Muffler, SC2 High Performance	8	2	---- ---	---- ---	1603 364
	Exhaust Extension to Front Muffler, SC3 Sub.	8	2	---- ---	---- ---	2240 312
	Exhaust Extension to Front Muffler, SY1 Cv. Cp.	8	2	---- ---	---- ---	1843 008
	Intermediate Exhaust Pipe to Front Muffler, SC3 Sub.	8	2	---- ---	---- ---	1843 008
	Tail Pipe, Rear		★	*2240 308	*2240 311	
	Except Sub., SP2, SD2	8	2	---- ---	1603 364	
	Except Sub., SP2, SD2	8	★	---- ---	2279 897	--------
	w/413 cu. in. Eng.	8	2	---- ---	*2240 312	
	SD3	8	★	---- ---	2240 312	2240 312
	SC3 Sub., SY1 Cv. Cp.	8	2	---- ---	---- ---	2240 311
	Tail Pipe, Front, SP2, SD2	8	2	---- ---	1603 364	
	Tail Pipe to Muffler	6	1	---- ---	1843 009	
	SD3, SC1, SC2, SC3 except Sub.	8	1	---- ---	1843 008	1843 008
	SC3 Sub., SY1 Cv. Cp.	8	2	---- ---	---- ---	1843 009
	Tail Pipe to Front Muffler, SY1 except Cv. Cp.	8	1	---- ---	---- ---	1843 407
	Tail Pipe to Rear Muffler, SC2, SY1 except Cv. Cp.	8	★	---- ---	---- ---	1843 008
	CLAMP, Front Muffler, SC2, SC3 Sub.	8	4	---- ---	---- ---	2240 312
11-02-4	SUPPORT, w/INSULATOR, Front Muffler, Right, SD3, SC1, SC3 Sub.	8	1	---- ---	2122 796	2122 796
	Left, SD3, SC1, SC3 Sub.	8	1	---- ---	1948 549	1948 549
	Except Cv. Cp., SY1	8	1	---- ---	---- ---	2265 968
	Right, Cv. Cp., SY1	8	1	---- ---	---- ---	1820 319
	Left, Cv. Cp., SY1	8	1	---- ---	---- ---	1820 318
	NUT and RETAINER, except SY1		2	---- ---	---- ---	*6025 007

★ Indicates use as required. Numerals in parentheses ( ) refer to notes. Printed in U.S.A.
⊟ Indicates parts not listed in any previous parts book. Prices and specifications subject to change without notice.
* Indicates change or addition.

MyMopar.com

CODE	PART NAME AND DESCRIPTION	CYL.	PER CAR	VALIANT LANCER	PLYMOUTH DODGE	CHRYSLER IMPERIAL
11-05-0	**EXHAUST PIPE**					
	SINGLE EXHAUST					
11-05-1	PIPE, w/170 cu. in. Eng.	6	1	2208 420		
	SL1 w/225 cu. in. Eng.	6	1	2208 440		
	Taxi and Police, w/170 cu. in. Eng.	6	1	---- ---	2203 611	
		6	1	---- ---	2208 428	
	SP2, SD2	8	1	---- ---	2203 557	
	SD3, SC1, SC2	8	1	---- ---	2123 462	2123 462
	SC3 except Sub.	8	1	---- ---	---- ---	2201 432
	SY1 except Cv. Cp.	8	1	---- ---	---- ---	2265 955
	DUAL EXHAUST					
	Right, w/318 cu. in. Eng.	8	1	---- ---	2203 568	
	Left, w/318 cu. in. Eng.	8	1	---- ---	2203 566	
	Right, w/361 cu. in. Eng., SP2, SD2	8	1	---- ---	2208 434	
	Left, w/361 cu. in. Eng., SP2, SD2	8	1	---- ---	2208 432	
	Right, SP2, SD2, SC2, w/413 cu. in. Eng.	8	1	---- ---	⊟2404 938	*2265 952
	Left, SP2, SD2, SC1, w/413 cu. in. Eng.	8	1	---- ---	⊟2404 934	*2265 950
	Right, SC3 Sub.	8	1	---- ---	---- ---	2123 481
	Left, SC3 Sub.	8	1	---- ---	---- ---	2123 479
	Right, SY1 Cv. Cp.	8	1	---- ---	---- ---	1948 166
	Left, SY1 Cv. Cp.	8	1	---- ---	---- ---	2265 975
	SINGLE EXHAUST					
11-05-4	PIPE, Exhaust Extension					
	SP2, SD2	8	1	---- ---	2203 563	
	SD3, SC1, SC2, SC3 except Sub.	8	1	---- ---	2123 469	2123 469
	SY1 except Cv. Cp.	8	1	---- ---	---- ---	2265 963
	Intermediate, TY1, except Cv. Cp.	8	1	---- ---	---- ---	*2265 959
	DUAL EXHAUST					
	Right, SC3 Sub.	8	1	---- ---	---- ---	2123 492
	Left, SC3 Sub.	8	1	---- ---	---- ---	2123 491
	Right, SY1 Cv. Cp.	8	1	---- ---	---- ---	1948 173
	Left, SY1 Cv. Cp.	8	1	---- ---	---- ---	2265 977
	Right, SP2, SD2, SC2, w/413 cu. in. Eng.	8	1	---- ---	⊟2404 946	*1948 565
	Left, SP2, SD2, SC2, w/413 cu. in. Eng.	8	1	---- ---	⊟2404 945	*1948 569
11-05-9	PIPE, Exhaust Crossover, w/413 cu. in. Eng.	8	1	---- ---	⊟2404 942	
11-05-12	FLANGE, Extension Pipe Ball Joint, Single					
	Exhaust, SD3	8	1	---- ---	1946 639	1946 639
	Dual Exhaust	8	2	---- ---	---- ---	1946 637
11-06-0	**EXHAUST PIPE FLANGE GASKET AND STUD**					
11-06-2	STUD, Exhaust Manifold Flange, SP2, SD2	8	★	---- ---	1402 981	
11-06-3	NUT, Extension Pipe Ball Joint Flange, SD3	8	★	---- ---	1946 648	1946 648
11-06-8	GASKET, Exhaust Pipe Flange	6	1	2073 792	2073 792	
	Use w/318 cu. in. Eng.	8	★	---- ---	1636 570	
	Use w/361 cu. in. Eng.	8	★	---- ---	1855 029	
	Use w/413 cu. in. Eng.	8	2	---- ---	⊟2401 577	
	Cover, w/413 cu. in. Eng.	8	2	---- ---	⊟2401 577	
		8	★	---- ---	---- ---	1855 029
11-06-10	COVER, Exhaust Pipe Flange, w/413 cu. in. Eng.	8	2	---- ---	⊟2404 941	
11-08-0	**EXHAUST PIPE SUPPORT AND CLAMP**					
11-08-5	BRACE, Taxi, Police, w/Auto. Trans.	6	1	---- ---	2401 593	
	Taxi, Police, w/Std. Trans.	6	1	---- ---	2203 638	

★ Indicates use as required. Numerals in parentheses ( ) refer to notes. Printed in U.S.A.
⊟ Indicates parts not listed in any previous parts book. Prices and specifications subject to change without notice.

MyMopar.com

CODE	PART NAME AND DESCRIPTION	CYL.	PER CAR	VALIANT LANCER	PLYMOUTH DODGE	CHRYSLER IMPERIAL
11-09-0	**TAIL PIPE**					
	SINGLE EXHAUST					
11-09-3	PIPE, Tail					
	Except Sub.	6	1	2201 436	2203 577	
	Sub.	6	1	2201 437	2203 579	---- ---
	Except Sub., SP2, SD2	8	1	---- ---	2203 588	
	Except Sub., SD3, SC1, SC2	8	1	---- ---	2266 033	2266 033
	Sub., SP2, SD2	8	1	---- ---	2203 583	
	Sub., SD3, SC1	8	1	---- ---	1948 590	1948 590
	Front, SC3 except Sub.	8	1	---- ---	---- ---	*2201 411
	DUAL EXHAUST					
	Right, except Sub., SP2, SD2	8	1	---- ---	2203 589	
	Left, except Sub., SP2, SD2	8	1	---- ---	2203 588	
	Right, Sub., SC3	8	1	---- ---	2203 584	1948 589
	Left, Sub., SC3	8	1	---- ---	2203 583	1948 588
	Right, SP2, SD2, SC2, w/413 cu. in. Eng.	8	1	---- ---	⊟2405 333	*1948 539
	Left, SP2, SD2, SC2, w/413 cu. in. Eng.	8	1	---- ---	⊟2405 332	*1948 538
	Right, Intermediate, SC3 Sub.	8	1	---- ---	---- ---	1948 536
	Left, Intermediate, SC3 Sub.	8	1	---- ---	---- ---	1948 535
	Right, SY1 Cv.Cp.	8	1	---- ---	---- ---	1948 284
	Left, SY1 Cv.Cp.	8	1	---- ---	---- ---	1948 283
	Right, Intermediate, SY1 Cv.Cp.	8	1	---- ---	---- ---	1948 267
	Left, Intermediate, SY1 Cv.Cp.	8	1	---- ---	---- ---	1948 266
11-10-0	**TAIL PIPE SUPPORT**					
11-10-3	SUPPORT, w/INSULATOR					
	SINGLE EXHAUST					
	Front	6	1	2201 406		
	Rear	6	1	2073 794		
	Front	6	1	---- ---	2203 677	
	Front, SP2, SD2	8	1	---- ---	2203 965	
	Rear, except Sub., SP2, SD2		1	---- ---	2203 909	
	Rear, Sub., SP2, SD2		1	---- ---	2203 915	
	Rear, Sub., SD3, SC1	8	1	---- ---	2208 393	2208 393
	Front, SD3, SC1, SC2, SC3 except Sub.	8	1	---- ---	2123 440	2123 440
	Rear, SD3, SC1, SC2 except Sub.	8	1	---- ---	2208 390	2208 390
	Rear, SC3 except Sub.	8	1	---- ---	---- ---	2208 388
	Front, SY1 except Cv.Cp.	8	1	---- ---	---- ---	2265 985
	Rear, SY1 except Cv.Cp.	8	1	---- ---	---- ---	2265 972
	DUAL EXHAUST					
	Front, Right, SP2, SD2	8	1	---- ---	2203 966	
	Front, Left, SP2, SD2	8	1	---- ---	2203 965	
	Rear, except Sub., SP2, SD2	8	2	---- ---	2203 909	
	Rear, Sub., Right, SP2, SD2	8	1	---- ---	2203 916	
	Rear, Sub., Left, SP2, SD2	8	1	---- ---	2203 915	
	Front, Right, w/413 cu. in. Eng.	8	1	---- ---	⊟2404 930	
	Front, Left, w/413 cu. in. Eng.	8	1	---- ---	⊟2404 929	
	Rear, w/413 cu. in. Eng.	8	2	---- ---	⊟2401 562	
	Front, SC2	8	2	---- ---	---- ---	2123 440
	Rear, Right, SC2	8	1	---- ---	---- ---	2208 391
	Rear, Left, SC2	8	1	---- ---	---- ---	2208 390
	Front, SC3 Sub.	8	2	---- ---	---- ---	2123 438
	Rear, SC3 Sub., Right	8	1	---- ---	---- ---	2208 394
	Rear, SC3 Sub., Left	8	1	---- ---	---- ---	2208 393
	Front, SY1 Cv.Cp.	8	2	---- ---	---- ---	2123 456
	Rear, SY1 Cv.Cp.	8	2	---- ---	---- ---	2208 396

★ Indicates use as required. Numerals in parentheses ( ) refer to notes. Printed in U.S.A.
⊟ Indicates parts not listed in any previous parts book. Prices and specifications subject to change without notice.
* Indicates change or addition. March 8, 1963 Supersedes May 1, 1962.

MyMopar.com

CODE	PART NAME AND DESCRIPTION	CYL.	PER CAR	VALIANT LANCER	PLYMOUTH DODGE	CHRYSLER IMPERIAL
11-10-0	**TAIL PIPE SUPPORT - Cont'd**					
11-10-17	U-BOLT, Front	6	1	2073 812		
	SP2, SD2	8	★	---- ---	2203 968	
11-10-18	NUT, Front Saddle Clamp U/Bolt		★	*2073 205	*2073 205	*2073 205
11-10-20	PLATE, Floor Pan, SP2, SD2	8	1	---- ---	2203 905	
11-10-26	WASHER, Insulator		★	688 900	688 900	688 900
11-10-42	HANGER, Rear Support	6	1	2073 797		
	Sub. Only except SD3		★	---- ---	2073 797	
	BRACKET, Floor Pan, SP2, SD2	8	1	---- ---	2203 924	
	BRACKET, Tail Pipe Front Support Right, SY1	8	1	---- ---	---- ---	*2123 395
	Left, SY1	8	1	---- ---	---- ---	*2123 396
	Left, w/Brake Tube BRACKET, SY1	8	1	---- ---	---- ---	*2201 403

NOTES

MyMopar.com

GROUP 12 - FENDERS AND SHEET METAL

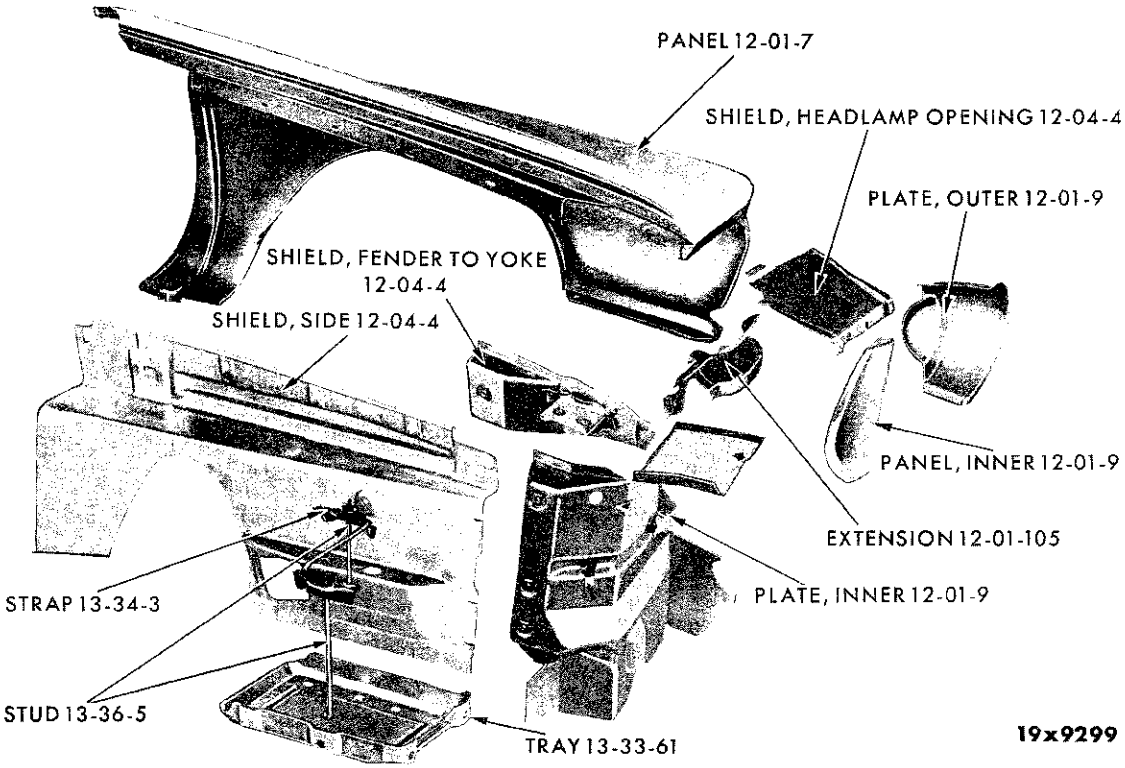

FRONT FENDER - PLYMOUTH SP1-2

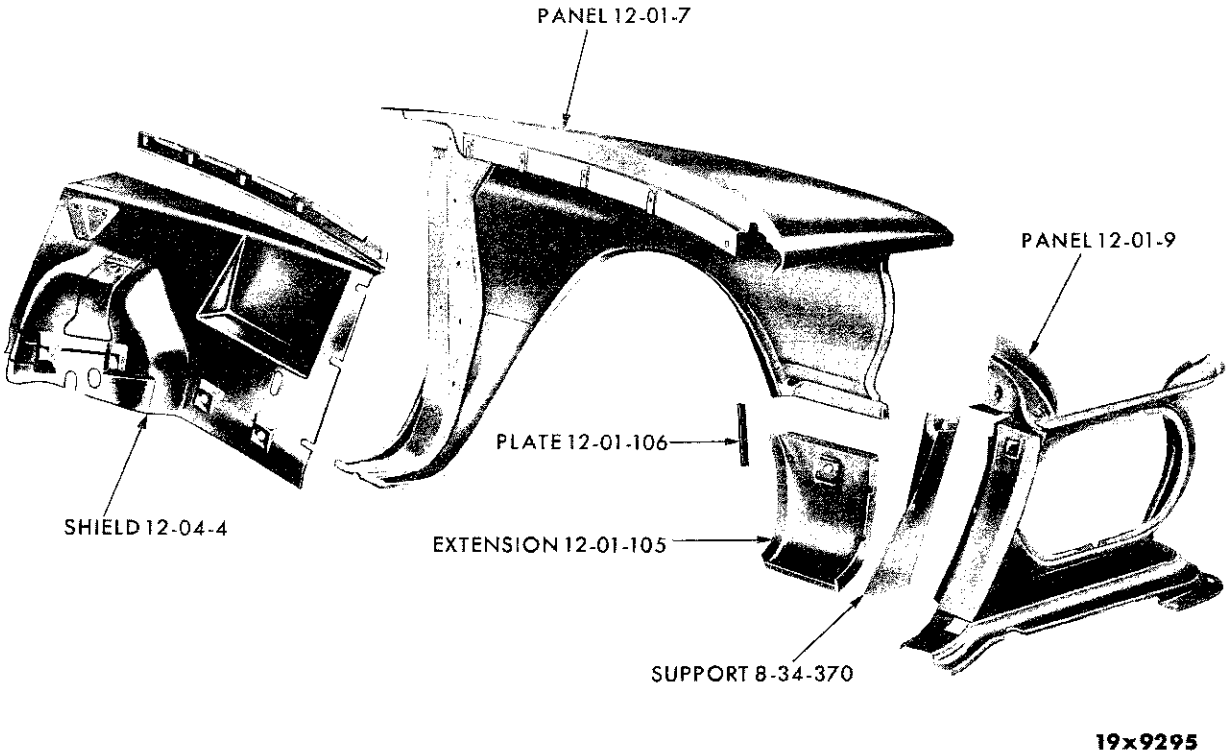

FRONT FENDER - VALIANT SV1

MyMopar.com

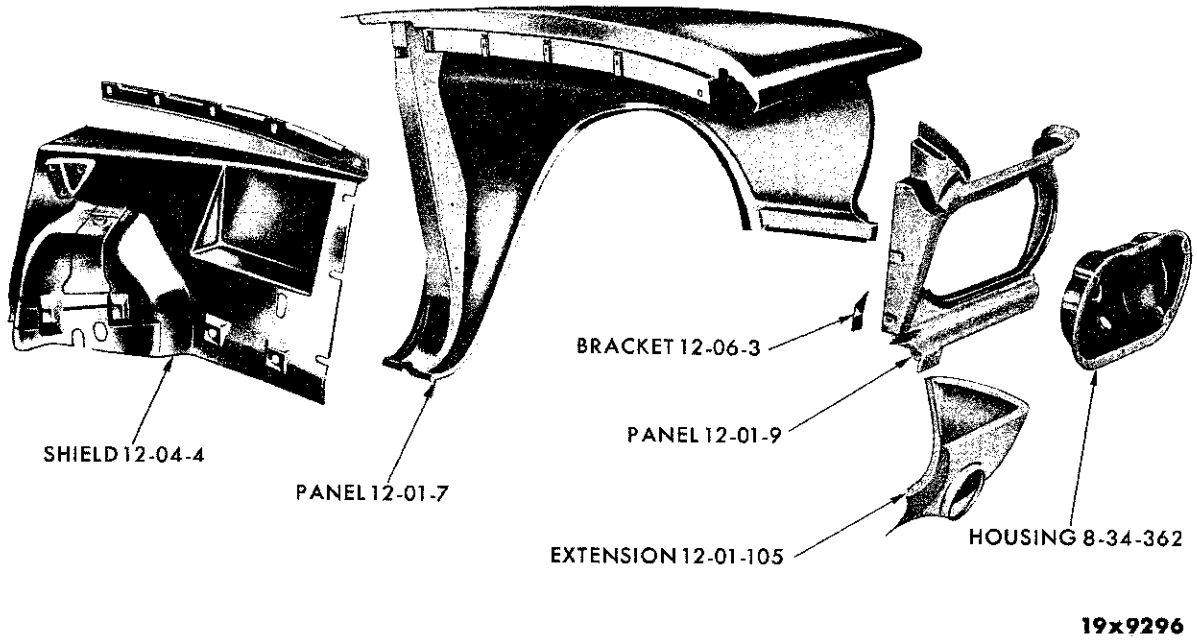

FRONT FENDER - LANCER SL1

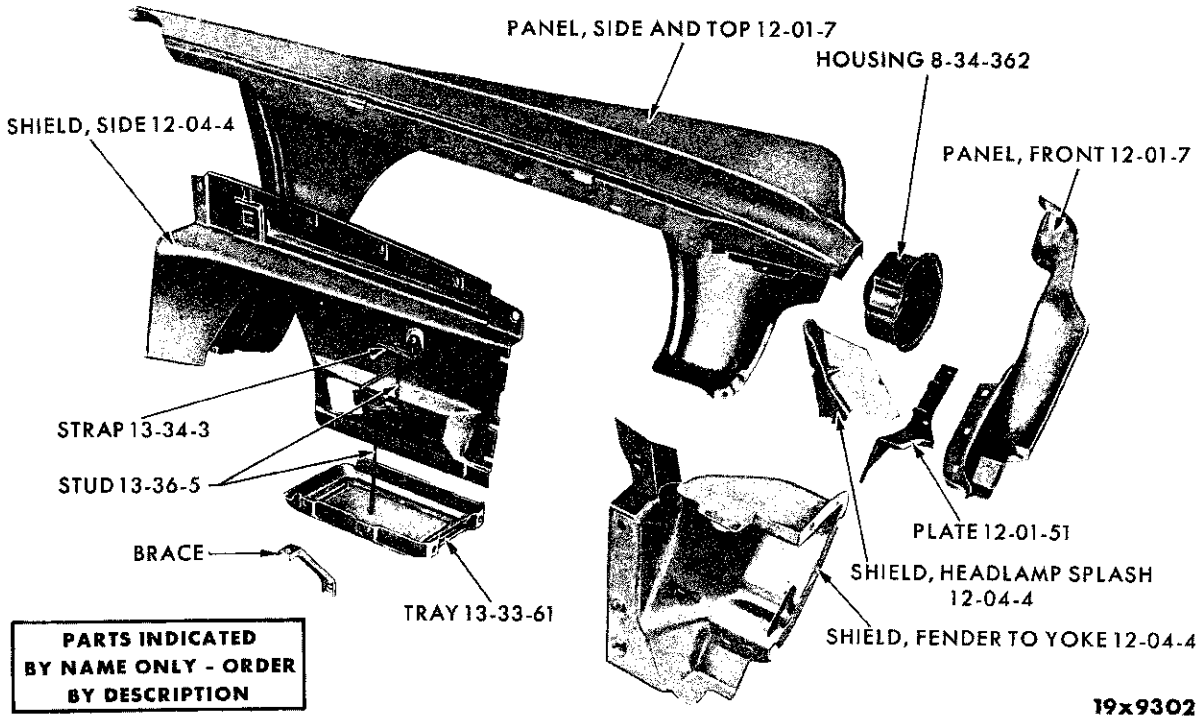

FRONT FENDER - DART SD1-2

MyMopar.com

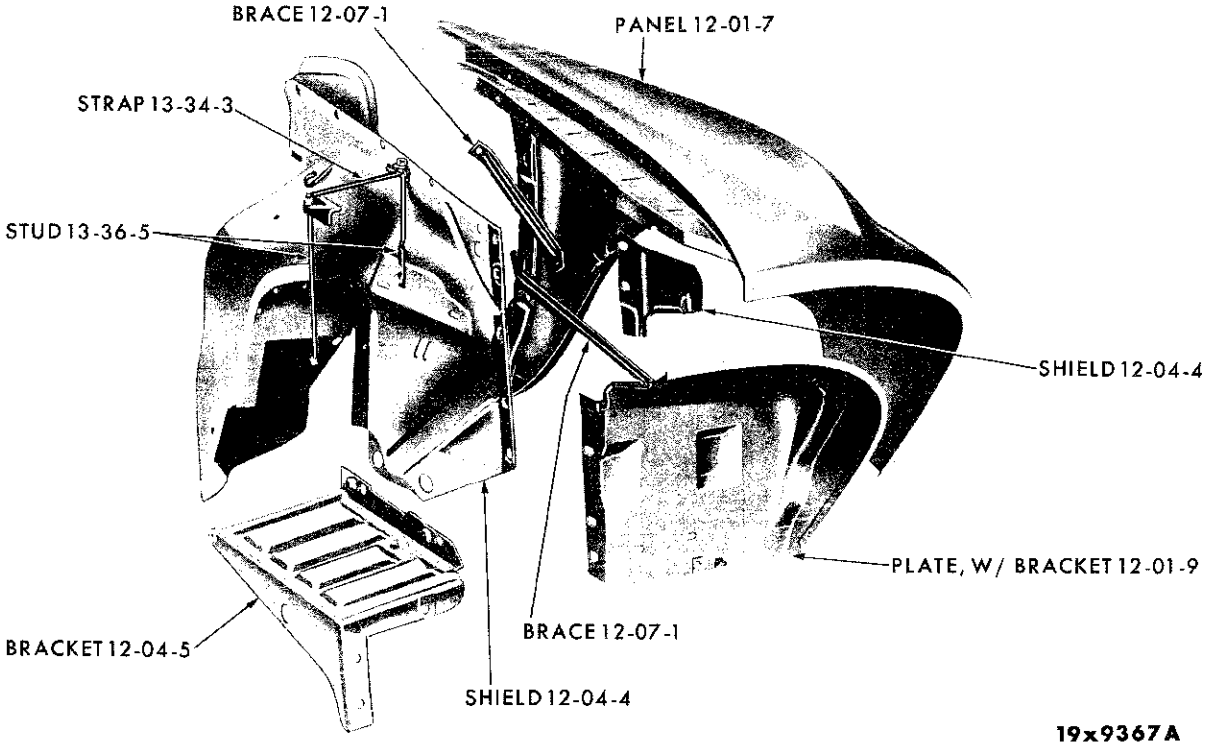

FRONT FENDER - DODGE SD3

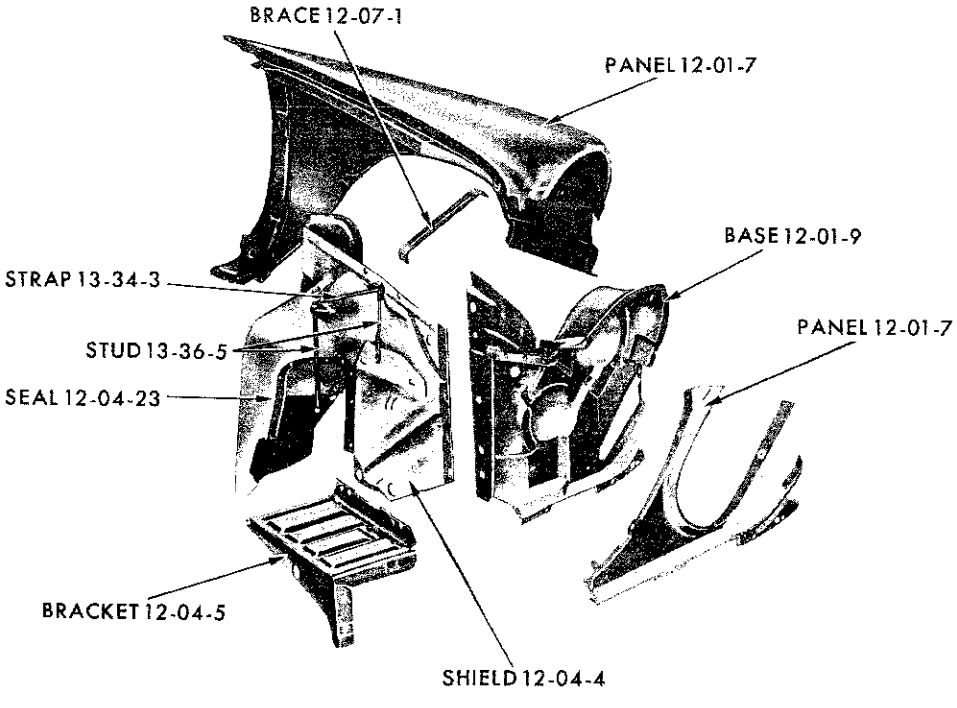

FRONT FENDER - CHRYSLER SC1-2-3

MyMopar.com

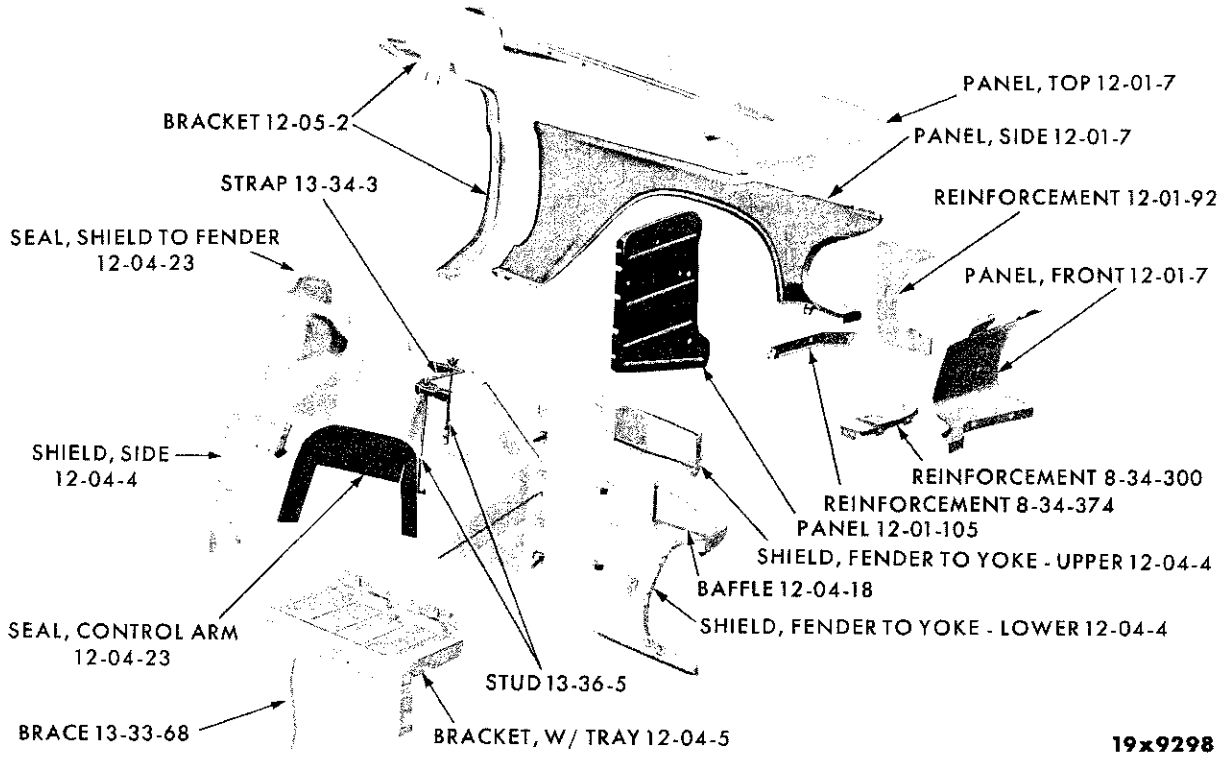

FRONT FENDER - IMPERIAL SY1

NOTES

MyMopar.com

12-01-0 FRONT FENDERS

To Facilitate soldering of Fender Sections, it is suggested that you specify MoPar Tin Swipe, Part No. 2298 922 with every order for fender sections. This 6 ounce aerosol spray can will tin approximately 100 square feet and save the repairman both time and money.

CODE	PART NAME AND DESCRIPTION	CYL.	PER CAR	VALIANT LANCER	PLYMOUTH DODGE	CHRYSLER IMPERIAL
12-01-5	FENDER ASSEMBLY, Right, SV1, SP1, SP2		1	⊟2253 188	⊟2253 142	
	Left, SV1, SP1, SP2		1	⊟2253 189	⊟2253 143	
	Right, SL1, SD1, SD2		1	⊟2253 220	⊟2253 256	
	Left, SL1, SD1, SD2		1	⊟2253 221	⊟2253 257	
	Right, SD3	8	1	---- ---	*1904 026	
	Left, SD3	8	1	---- ---	*1904 027	
	Right, SY1	8	1	---- ---	---- ---	⊟2425 264
	Left, SY1	8	1	---- ---	---- ---	⊟2425 265
12-01-7	PANEL, Fender Front, Right, SC1, SC2, SC3		1	---- ---	---- ---	*1919 414
	Left, SC1, SC2, SC3		1	---- ---	---- ---	*1919 415
	Right, SY1	8	1	---- ---	---- ---	1904 066
	Left, SY1	8	1	---- ---	---- ---	1904 067
	PANEL, Fender Side, Right, SC1, SC2	8	1	---- ---	---- ---	2253 718
	Left, SC1, SC2	8	1	---- ---	---- ---	2253 719
	Right, SC3	8	1	---- ---	---- ---	2253 722
	Left, SC3	8	1	---- ---	---- ---	2253 723
12-01-9	PANEL, Fender Headlamp Opening					
	Right, SL1	6	1	*2099 934		
	Left, SL1	6	1	*2099 935		
	Inner, Right, SP1, SP2		1	---- ---	2099 440	
	Inner, Left, SP1, SP2		1	---- ---	2099 441	
	BASE, Fender Headlamp, Right, SC1, SC2	8	1	---- ---	---- ---	1919 394
	Left, SC1, SC2	8	1	---- ---	---- ---	1919 395
	Right, SC3	8	1	---- ---	---- ---	1919 392
	Left, SC3	8	1	---- ---	---- ---	1919 393
12-01-10	BRACKET, Fender to Pillar, SD3	8	2	---- ---	1686 914	
12-01-12	STUD, Fender to Sill, SD3		★	---- ---	6022 016	6022 016
	To Pillar Support, SD3	6	2	6022 016	6024 017	6024 017
	Fender to Cowl, SD3, SC1, SC2, SC3	8	★	---- ---	1863 586	1863 586
	Fender to Crossmember, SP1, SP2		★	---- ---	6022 016	
	Fender to Yoke		★	---- ---	6022 016	
	SCREW, Fender to Cowl, Front, SD3, SY1	8	★	---- ---	6022 534	6022 237
	To Side Shield	6	6	6022 530		
	To Headlamp Opening Panel, SL1, SP1, SP2	6	4	6022 802	6022 802	
	To Sill		2	---- ---	6023 359	
	Fender to Cowl, Rear, SP1, SP2		★	---- ---	6022 533	
	Fender to Cowl, Rear, SD1, SD2		★	---- ---	6022 531	6022 534
	Fender to Dust Shield, SP1, SP2		6	---- ---	6022 506	
	Fender to Sill	6	2	6023 359		
	Fender to Dust Shield, SP1, SP2		2	---- ---	6022 530	
	Shear Panel to Side Panel, SY1	8	4	---- ---	---- ---	6022 506
	Shear Panel to Reinforcement, SY1	8	4	---- ---	---- ---	6022 508
	Fender to Yoke, SD1, SD2		2	---- ---	6022 506	
	Fender to Front Sill Cap, SD1, SD2		2	---- ---	6022 227	
	Fender Attaching Bracket		4	---- ---	6022 538	
	Baffle Plate to Fender, SD1, SD2		6	---- ---	6022 506	
	Fender to Sill Bracket, SY1	8	4	---- ---	---- ---	1863 612
	Fender to Headlamp Plate Brace, SD3		2	---- ---	6022 779	
	Fender Bracket to Cowl, SD3, SC1, SC2, SC3		2	---- ---	6022 532	6022 532

★ Indicates use as required. Numerals in parentheses ( ) refer to notes. Printed in U.S.A.
⊟ Indicates parts not listed in any previous parts book. Prices and specifications subject to change without notice.
* Indicates change or addition.

MyMopar.com

CODE	PART NAME AND DESCRIPTION	CYL.	PER CAR	VALIANT LANCER	PLYMOUTH DODGE	CHRYSLER IMPERIAL
12-01-0	**FRONT FENDERS - Cont'd**					
12-01-15	NUT, Fender to Side Shield	6	2	6023 170		
	Fender to Side Shield	6	4	2082 878		
	Top Panel to Grille Brace, SY1	8	2	---- ---	---- ---	6022 162
	Fender to Sill, SY1	8	2	---- ---	---- ---	*6023 171
12-01-16	WASHER, Fender to Crossmember, SP1, SP2		2	---- ---	6022 784	
	Fender to Sill, SP1, SP2, SD1, SD2		★	6022 187	6023 359	6022 187
	SD3		★	---- ---	6022 187	
	To Pillar Support	6	2	6022 187		
	To Splash Shield		8	---- ---	6023 291	
	To Cowl, SD3, SC1, SC2, SC3	8	★	---- ---	1903 478	1903 478
12-01-51	PLATE, Front Baffle, Right, SD1, SD2		1	---- ---	2099 812	
	Left, SD1, SD2		1	---- ---	2099 813	
12-01-92	REINFORCEMENT, Upper Flange, SY1	8	1	---- ---	---- ---	1904 180
12-01-105	EXTENSION, Fender, Lower, Right, SV1, SP1, SP2		1	2099 756		
	Left, SV1, SP1, SP2		1	2099 757		
	Right, SL1		1	2195 076		
	Left, SL1		1	2195 077		
	PANEL, Shear, Right, SY1	8	1	---- ---	---- ---	1904 194
	Left, SY1	8	1	---- ---	---- ---	1904 195
12-02-0	**FRONT FENDER SEAL OR SHIM**					
12-02-5	SEAL, to Shear Panel, SY1	8	★	---- ---	---- ---	1242 974
	To Pillar, Front, Lower, SD3	8	2	---- ---	2166 641	2166 641
	To Pillar, SY1	8	2	---- ---	---- ---	1810 073
	To Cowl, Right	6	1	2083 170		
	Left	6	1	2083 171		
	SHIM, Fender to Sill		★	6023 257	6023 257	6010 031
	Fender to Crossmember, SP1, SP2		★	---- ---	6010 031	
	Fender Side to Yoke Plate, SD1, SD2		★	---- ---	6010 031	
	Fender to Yoke, SD3, SC1, SC2, SC3	8	★	---- ---	1903 036	1903 036
	Fender to Cowl, Upper, Front, SD3, SC1, SC2, SC3	8	★	---- ---	1863 926	1863 926
	Fender to Cowl, Upper, Front, SY1	8	★	---- ---	---- ---	6010 037
	Fender to Cowl, Rear, SP1, SP2		★	---- ---	6010 031	
	Fender to Cowl		★	---- ---	2099 784	
	Fender to Cowl, Upper, Rear, SD3, SC1, SC2, SC3	8	★	---- ---	6010 035	6010 035
	Fender to Cowl, Lower, Rear, SC1, SC2, SC3	8	★	---- ---	---- ---	6010 031
12-02-12	FASTENER, Seal	6	12	6006 104		
	CLIP, Seal	6	2	6017 018		
	RING, Seal Hog	6	2	6008 076		
12-04-0	**FRONT FENDER SHIELD**					
12-04-4	SHIELD, Headlamp Splash, Right, SP1, SP2		1	---- ---	2099 434	
	Left, SP1, SP2		1	---- ---	2099 435	
	Right, SD1, SD2		1	---- ---	2099 536	
	Left, SD1, SD2		1	---- ---	2099 537	
	SHIELD, Side, Right, SP1, SP2, SD1, SD2, SC1, SC2		1	2082 012	2201 526	1948 420
	Left, SP1, SP2, SD1, SD2, SC1, SC2		1	2082 023	2260 439	1948 421
	Right, SD3, SC3, SY1	8	1	---- ---	1948 420	1948 440
	Left, SD3, SC3, SY1	8	1	---- ---	1948 421	1948 441
12-04-5	BRACKET, Upper Support, w/Battery TRAY, SD3	8	1	---- ---	1940 892	1940 892

★ Indicates use as required. Numerals in parentheses ( ) refer to notes. Printed in U.S.A.
⊟ Indicates parts not listed in any previous parts book. Prices and specifications subject to change without notice.
March 8, 1963 Supersedes May 1, 1962. * Indicates change or addition.

MyMopar.com

CODE	PART NAME AND DESCRIPTION	CYL.	PER CAR	VALIANT LANCER	PLYMOUTH DODGE	CHRYSLER IMPERIAL
12-04-0	**FRONT FENDER SHIELD - Cont'd**					
12-04-12	STUD, Shield to Yoke, SD3, SC1, SC2, SC3	8	2	---- ---	1903 396	1903 396
	SCREW, Shield to Fender		★	---- ---	6022 536	6022 536
	Shield to Brace	8	★	---- ---	--- ---	6022 532
	Shield to Brace, SY1	8	1	---- ---	---- ---	1739 049
	Shield to Frame, SD3, SC1, SC2, SC3	8	6	---- ---	6022 361	6022 361
	Shield to Frame, SY1	8	6	---- ---	---- ---	6012 066
	Brace to Fender Tab, SD3, SC1, SC2, SC3	8	2	---- ---	6000 160	6000 160
	Shield to Sill Cap, SD3, SC1, SC2	8	2	---- ---	1739 049	1739 049
	Shield to Fender to Yoke Shield, SD1, SD2		4	---- ---	6022 506	
	Upper Support Bracket to Yoke, SC3, SY1	8	3	---- ---	---- ---	6022 328
	Shield to Sill Panel to Dash		2	---- ---	6022 227	
	Headlamp Splash Shield to Fender, SP1, SP2		4	---- ---	6022 802	
	Shield to Dash Brace, SD3, SC1, SC2		2	---- ---	6022 532	6022 532
12-04-22	COVER, Rear		1	---- ---	2260 466	
12-04-23	SEAL, Shield to Fender, SY1	8	2	---- ---	---- ---	1940 859
	Shield to Upper Control Arm, SY1	8	2	---- ---	---- ---	1851 024
12-04-26	NUT, Shield to Hood Hinge Bracket, w/CLIP		2	---- ---	6023 170	
	Shield to Dash, w/RETAINER		2	---- ---	6012 065	
	Shield to Fender		★	6023 170	6023 170	6023 170
	Shield to Dash Brace, SD3, SC1, SC2		2	---- ---	6023 171	6023 171
12-04-33	BRACKET, Shield to Side Sill, Right, SC3	8	1	---- ---	---- ---	1948 402
	Left, SC3	8	1	---- ---	---- ---	1948 403
	To Pillar, SD3	8	2	---- ---	1686 914	
12-05-0	**FENDER PILLAR SUPPORT AND COWL BRACKET**					
12-05-2	BRACKET, Right, SY1	8	1	---- ---	---- ---	1863 328
	Left, SY1	8	1	---- ---	---- ---	1863 329
12-06-0	**FRONT FENDER BRACKET**					
12-06-3	BRACKET, Fender to Sill, SY1	8	2	---- ---	---- ---	1624 582
	Fender to Hood Hinge Plate, Right, SY1	8	1	---- ---	---- ---	1903 884
	Left, SY1	8	1	---- ---	---- ---	1903 885
12-06-6	SCREW, Bracket to Pillar Support	8	2	---- ---	---- ---	6022 029
	Bracket to Cowl, SY1	8	2	---- ---	---- ---	6022 009
12-07-0	**FRONT FENDER BRACE OR SUPPORT**					
12-07-1	BRACE, Fender to Shield, Right, SD3, SC1, SC2	8	1	---- ---	1948 412	1948 412
	Left, SD3, SC1, SC2	8	1	---- ---	1948 413	1948 413
	Right, SC3	8	1	---- ---	---- ---	1940 894
	Left, SC3	8	1	---- ---	---- ---	1940 895
	Right, SY1	8	1	---- ---	---- ---	⊟2405 050
	Left, SY1	8	1	---- ---	---- ---	⊟2405 051
	Headlamp Plate to Cross Bar, Right, SP1, SP2		1	---- ---	2276 790	
	Left, SP1, SP2		1	---- ---	2276 791	
	Fender to Headlamp Plate, Right, SD3	8	1	---- ---	1904 902	
	Left, SD3	8	1	---- ---	1904 903	
12-07-3	SCREW, Brace to Fender Tab, SY1	8	2	---- ---	---- ---	6012 078
12-15-0	**FRONT FENDER MOULDINGS AND NAME PLATES**					

See Exterior Moulding Illustration's in Front of Group 23 Body.

★ Indicates use as required. Numerals in parentheses ( ) refer to notes. Printed in U.S.A.
⊟ Indicates parts not listed in any previous parts book. Prices and specifications subject to change without notice.
* Indicates change or addition. March 8, 1963 Supersedes May 1, 1962.

MyMopar.com

CODE	PART NAME AND DESCRIPTION	CYL.	PER CAR	VALIANT LANCER	PLYMOUTH DODGE	CHRYSLER IMPERIAL

NOTES

MyMopar.com

GROUP 13 - FRAME

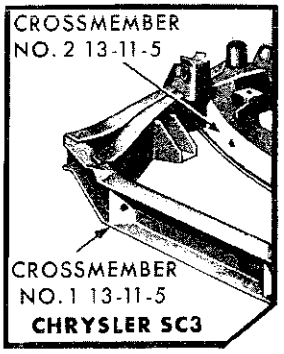

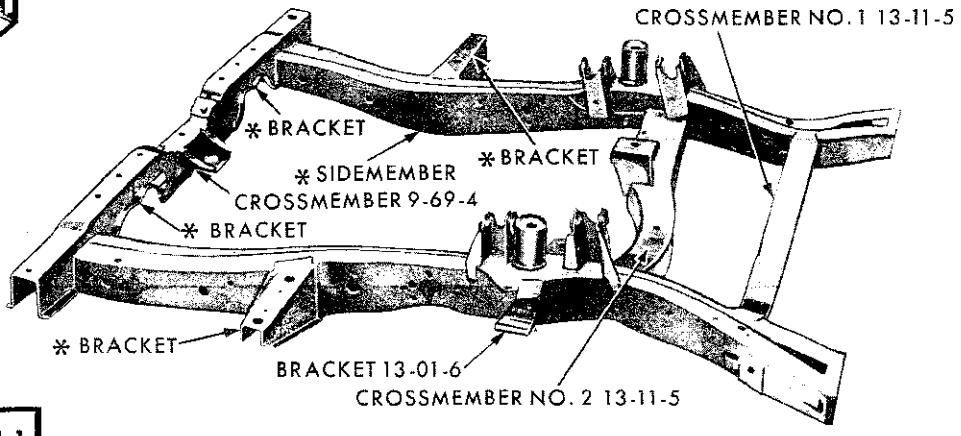

* SERVICED IN 13-01-1

19x9053C

FRAME - DODGE SD3 AND CHRYSLER SC1-2

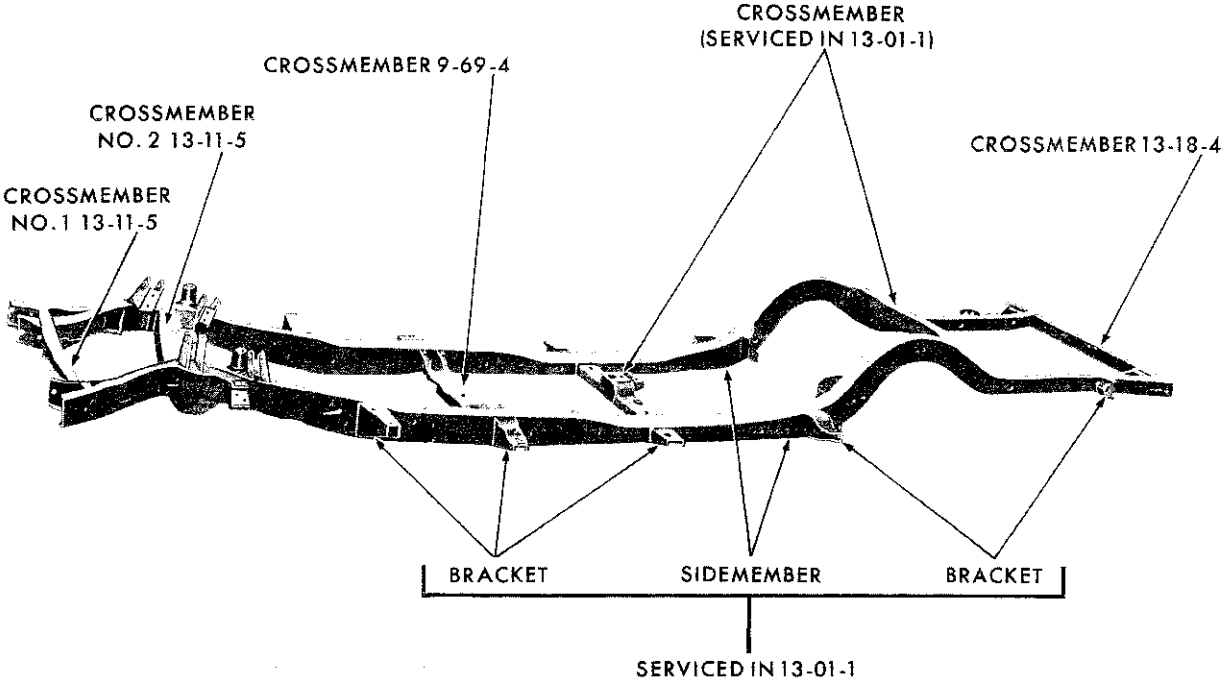

19x8824

FRAME (EXCEPT CONVERTIBLE COUPE) - IMPERIAL SY1

MyMopar.com

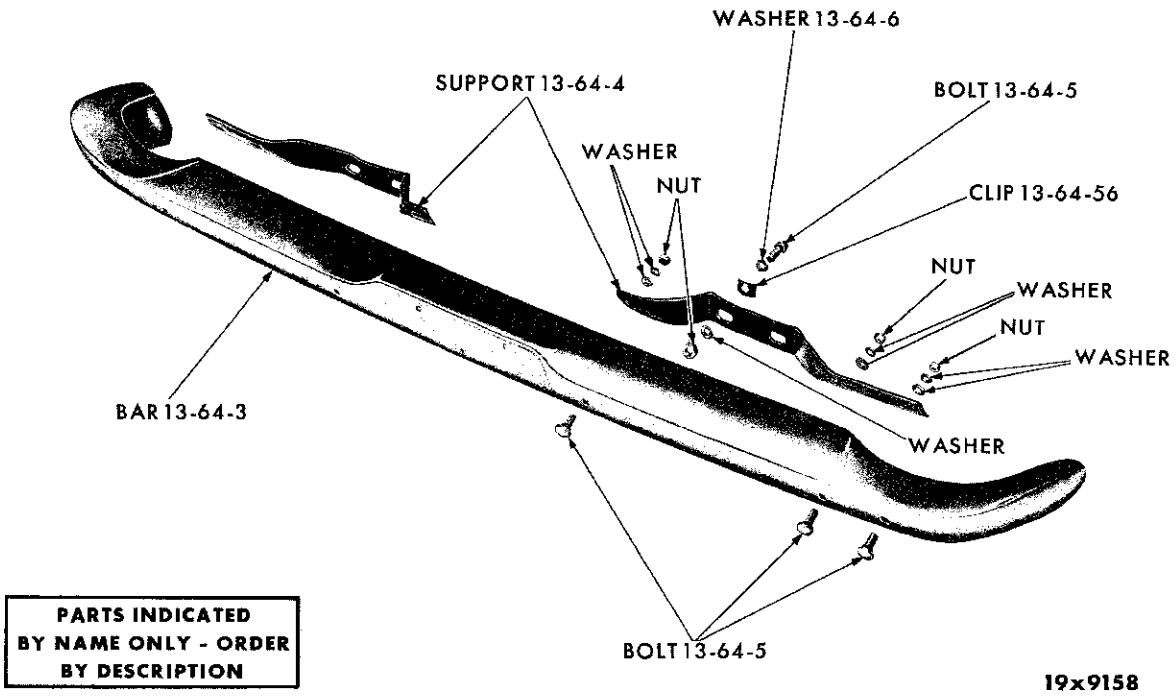

FRONT BUMPER - PLYMOUTH SP1-2

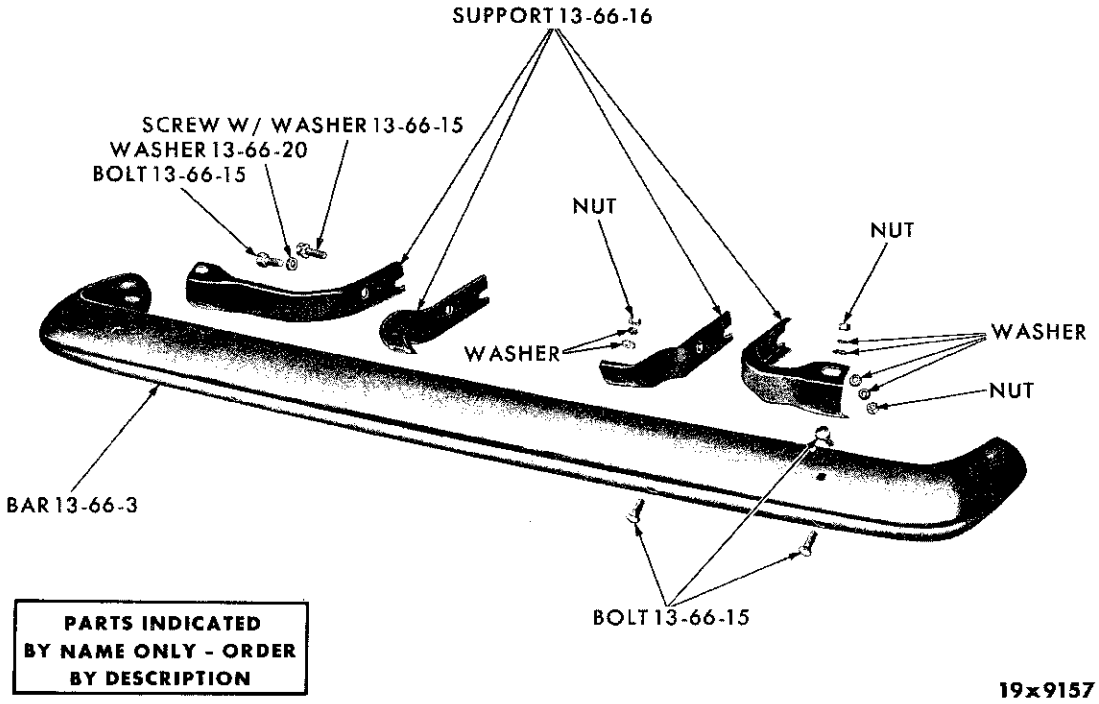

REAR BUMPER - PLYMOUTH SP1-2 (EXCEPT SUBURBAN)

MyMopar.com

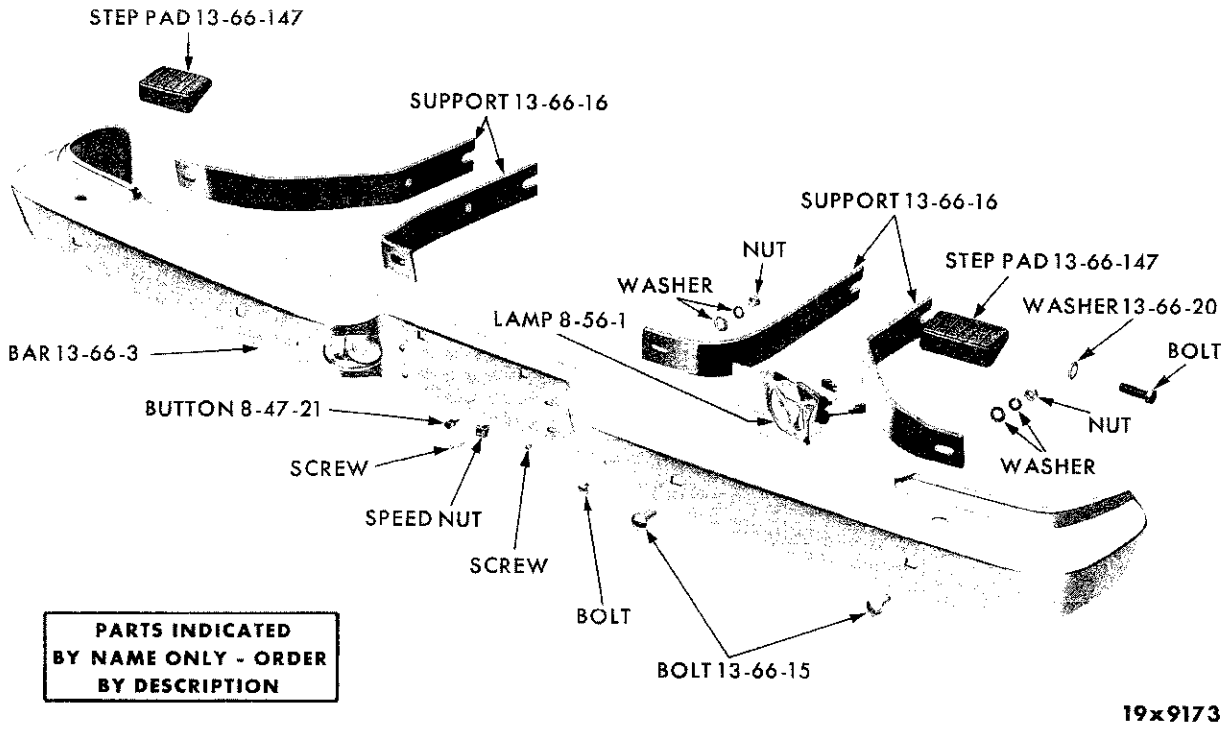

REAR BUMPER - PLYMOUTH SP1-2 AND DODGE SD1-2 (SUBURBAN)

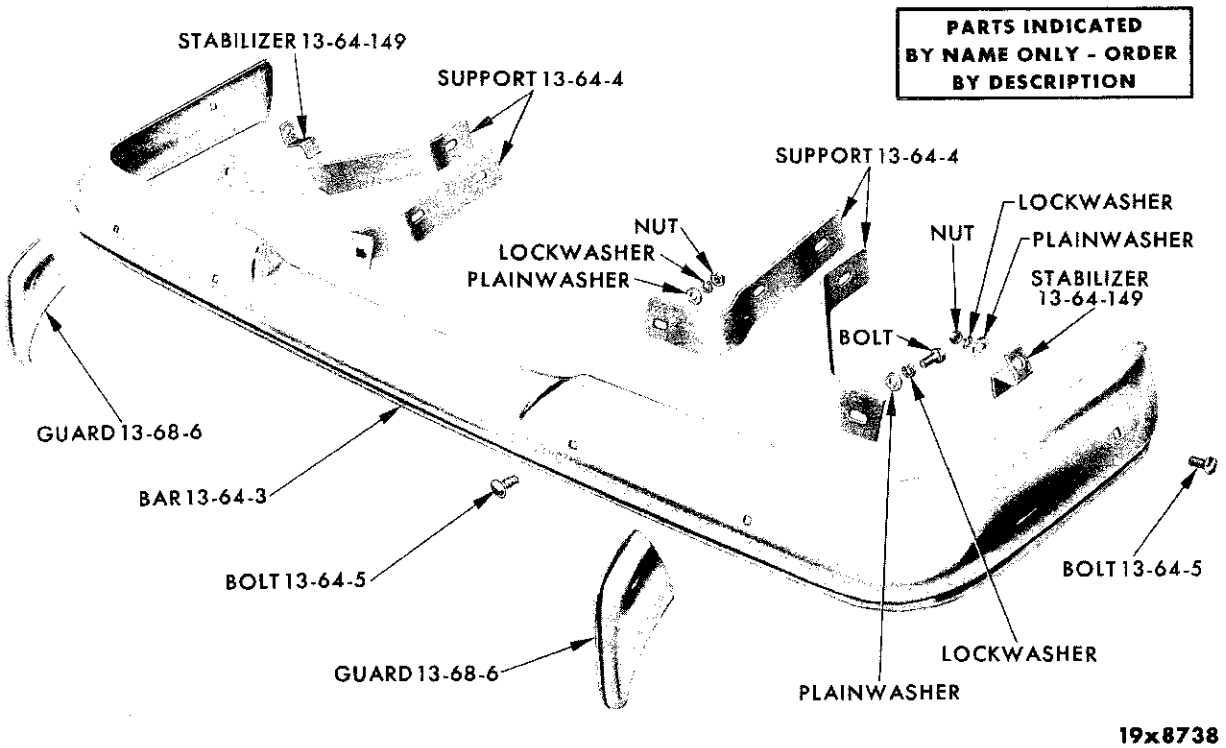

FRONT BUMPER - VALIANT SV1

MyMopar.com

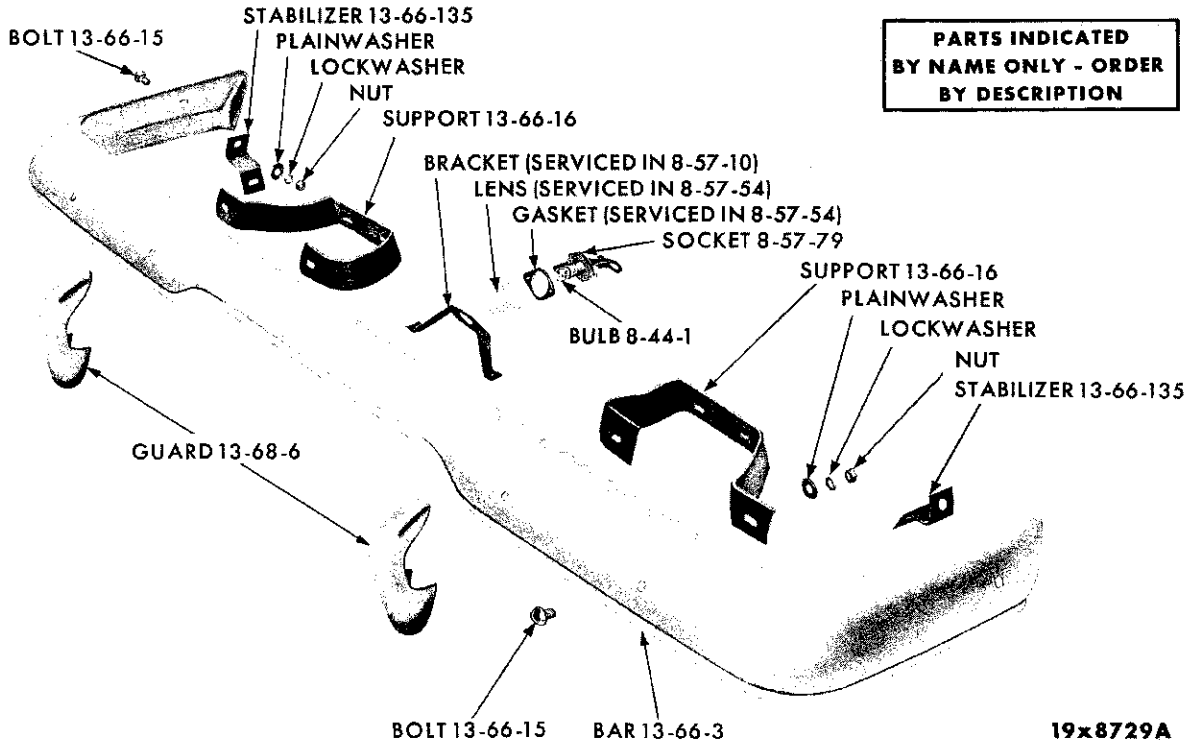

PARTS INDICATED BY NAME ONLY - ORDER BY DESCRIPTION

REAR BUMPER - VALIANT SV1

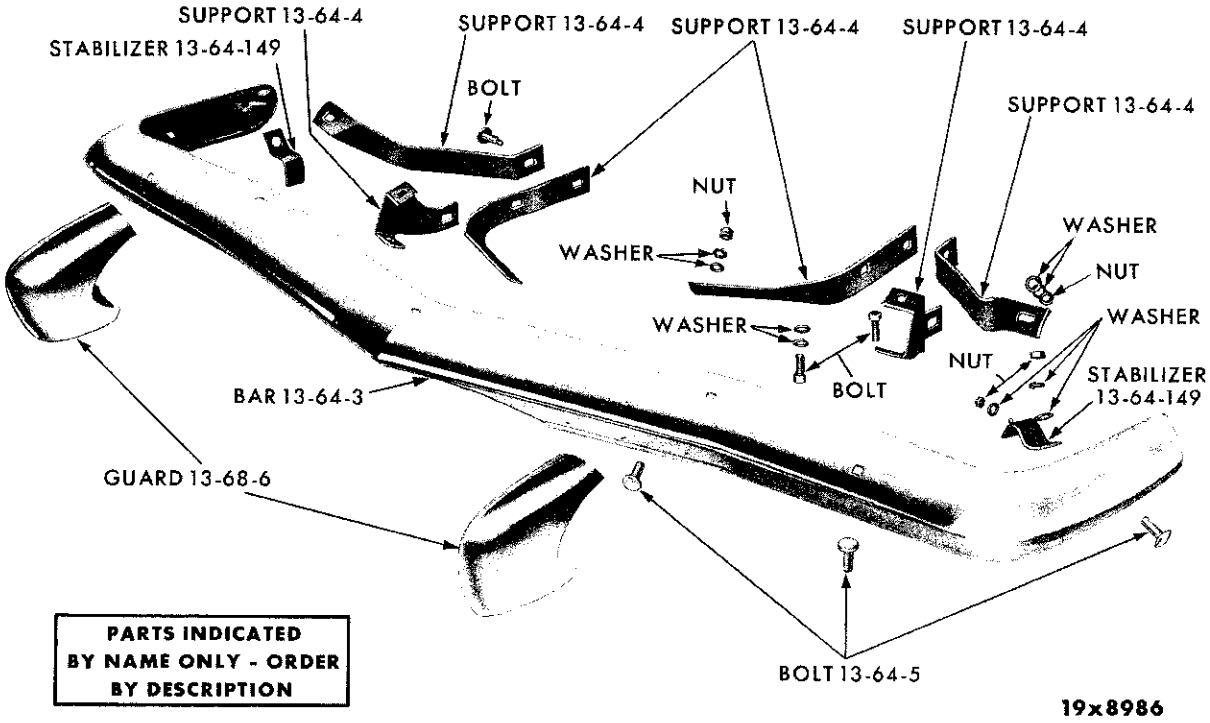

PARTS INDICATED BY NAME ONLY - ORDER BY DESCRIPTION

FRONT BUMPER - LANCER SL1

MyMopar.com

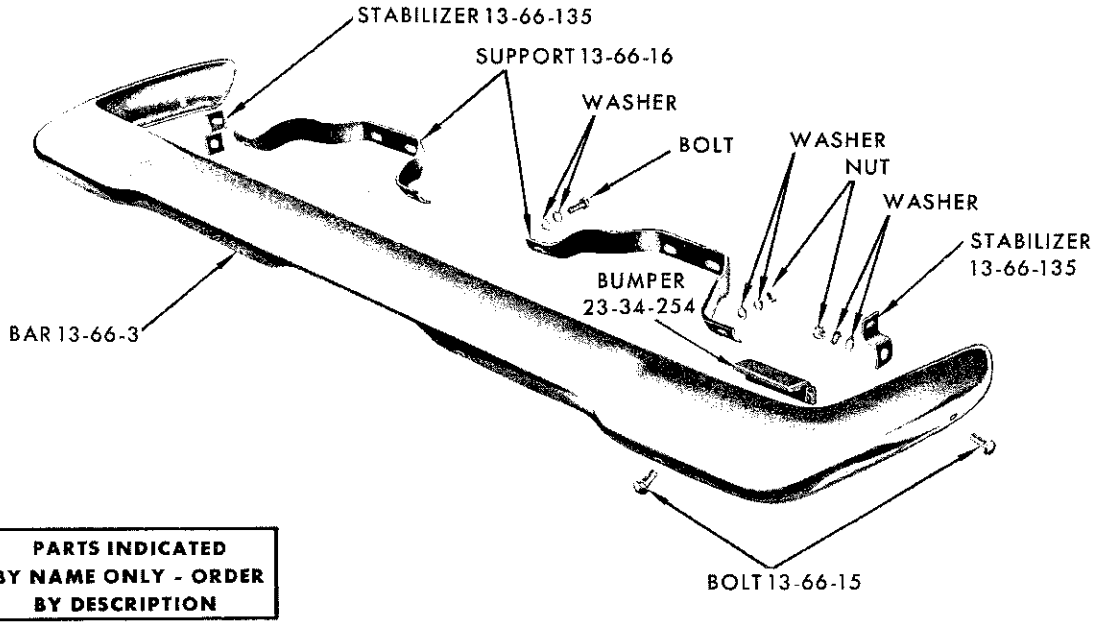

REAR BUMPER - LANCER SL1

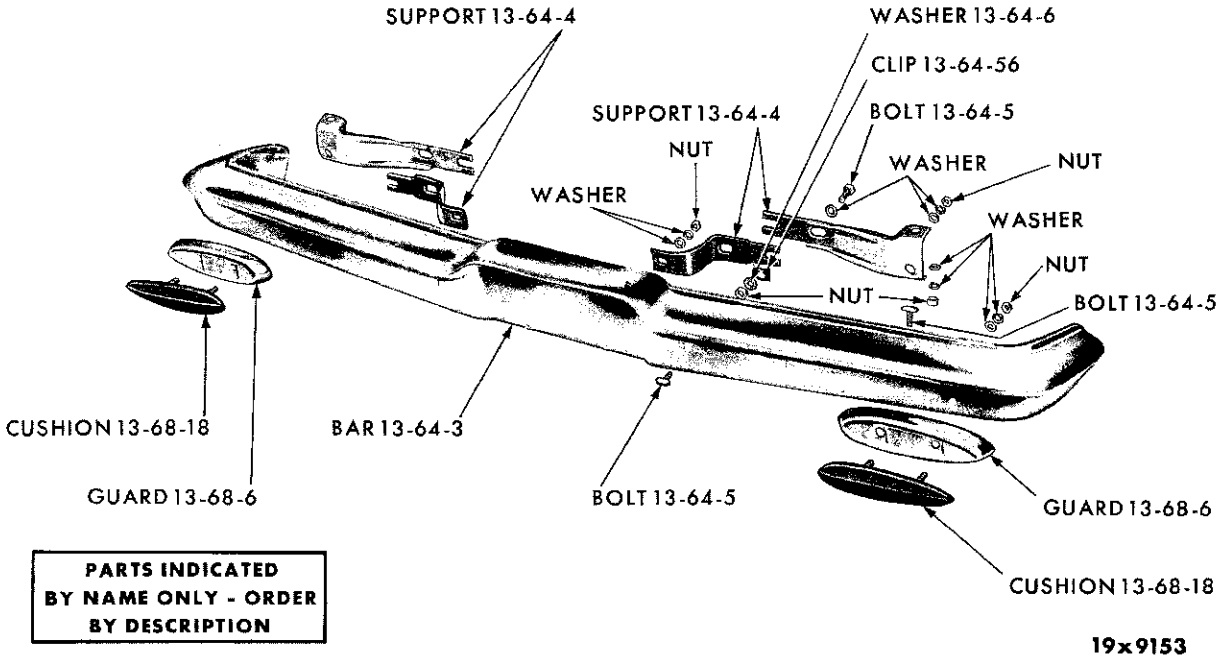

FRONT BUMPER - DODGE SD1-2

MyMopar.com

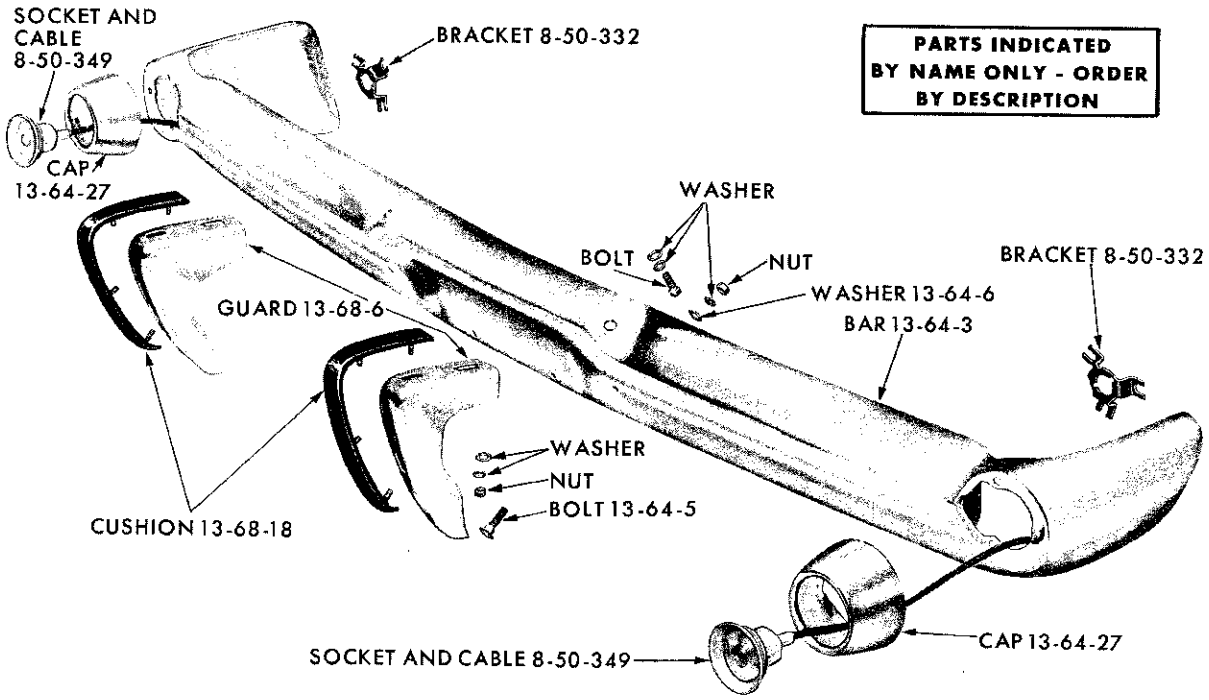

FRONT BUMPER - DODGE SD3

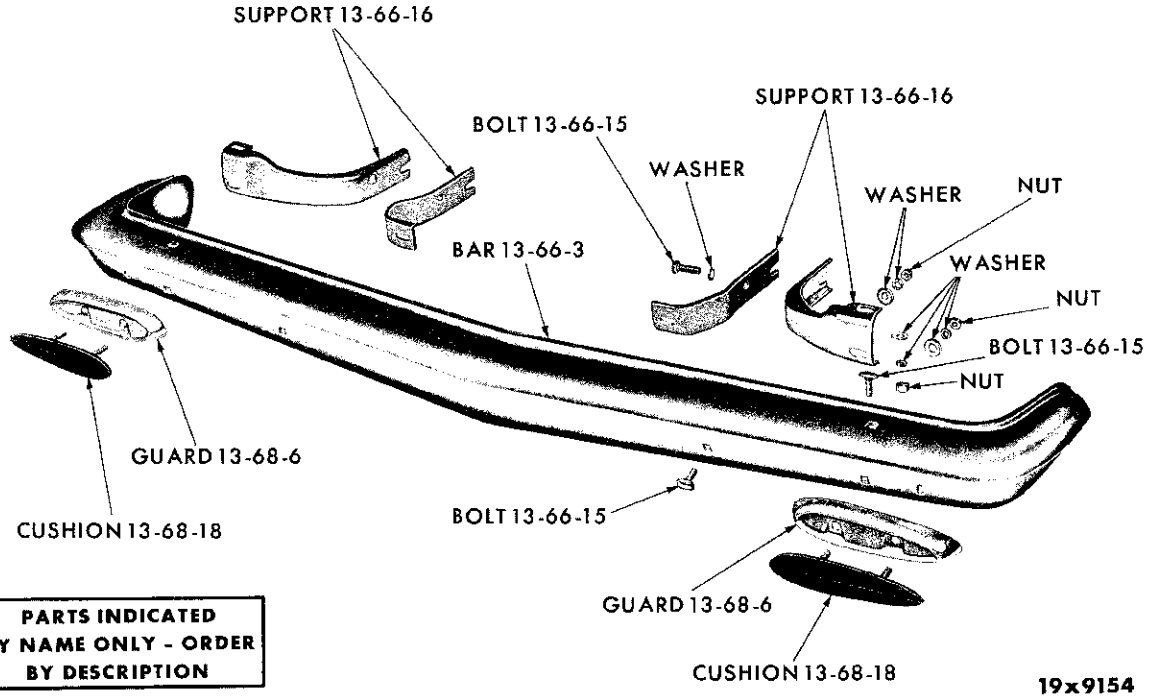

REAR BUMPER - DODGE SD1-2 (EXCEPT SUBURBAN)

MyMopar.com

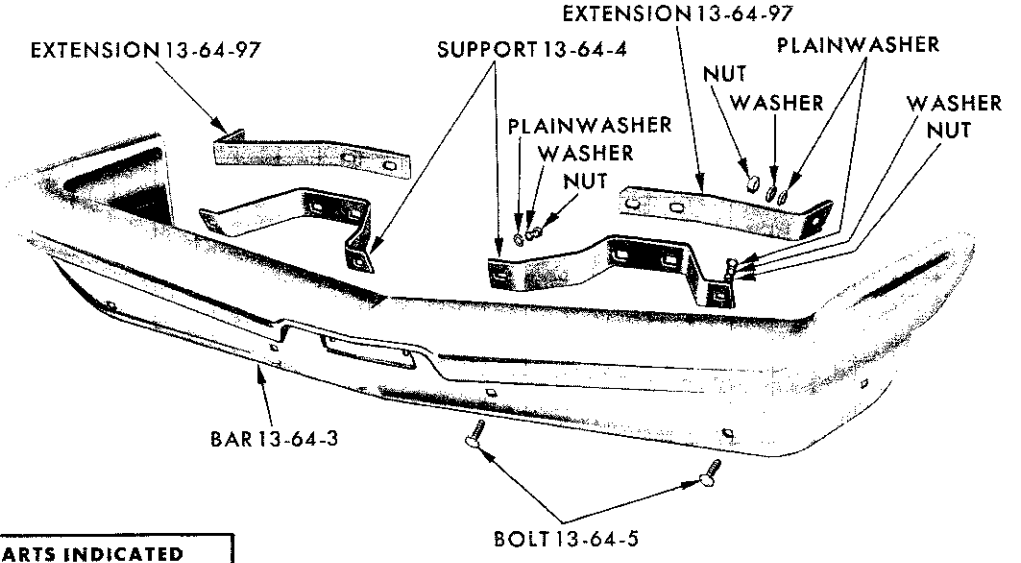

PARTS INDICATED BY NAME ONLY - ORDER BY DESCRIPTION

19x8615A

FRONT BUMPER - CHRYSLER SC1-2-3

NOTES

MyMopar.com

CODE	PART NAME AND DESCRIPTION	CYL.	PER CAR	VALIANT LANCER	PLYMOUTH DODGE	CHRYSLER IMPERIAL

NOTES

MyMopar.com

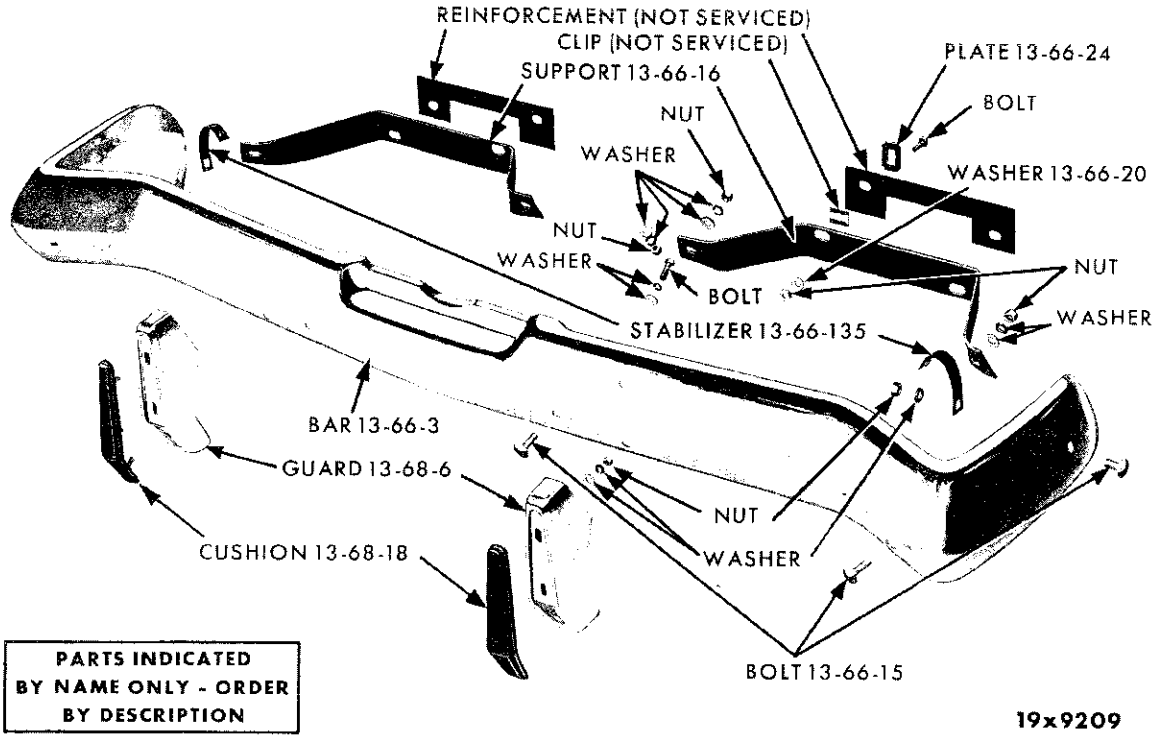

REAR BUMPER - DODGE SD3 AND CHRYSLER SC1-2-3 (EXCEPT SUBURBAN)

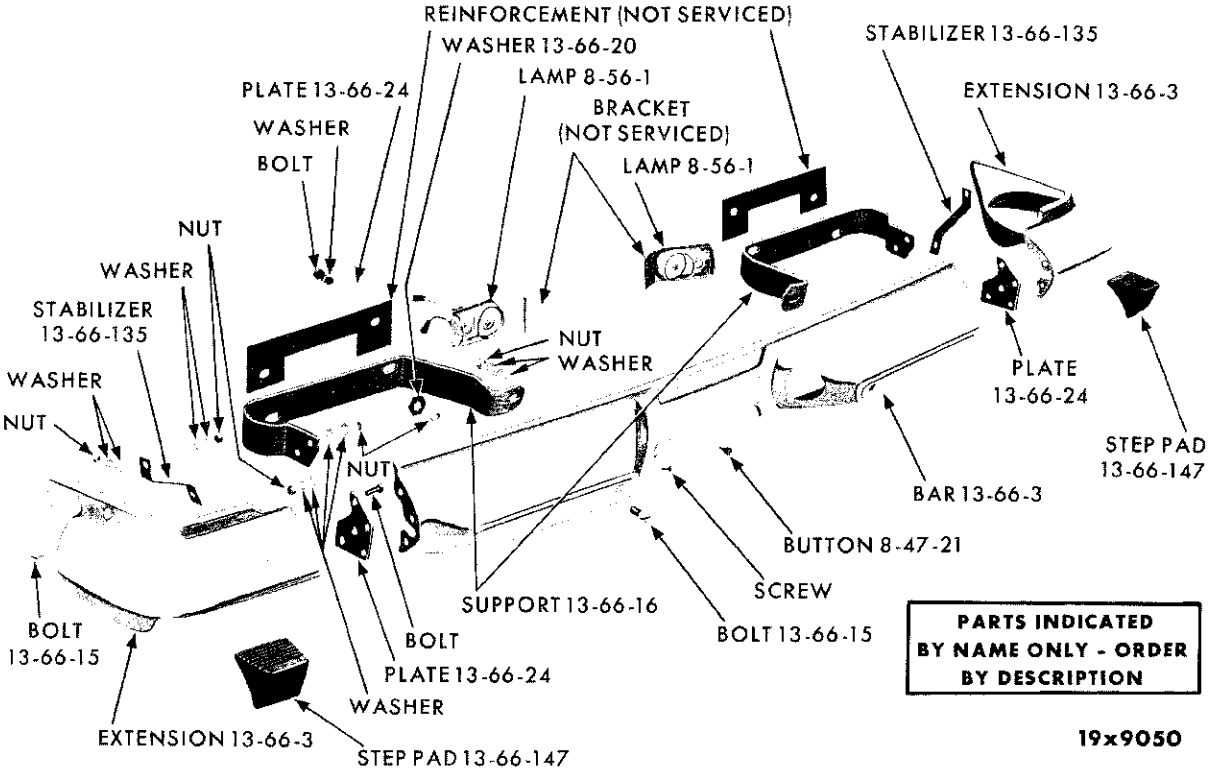

REAR BUMPER - DODGE SD3 AND CHRYSLER SC1-3 (SUBURBAN)

MyMopar.com

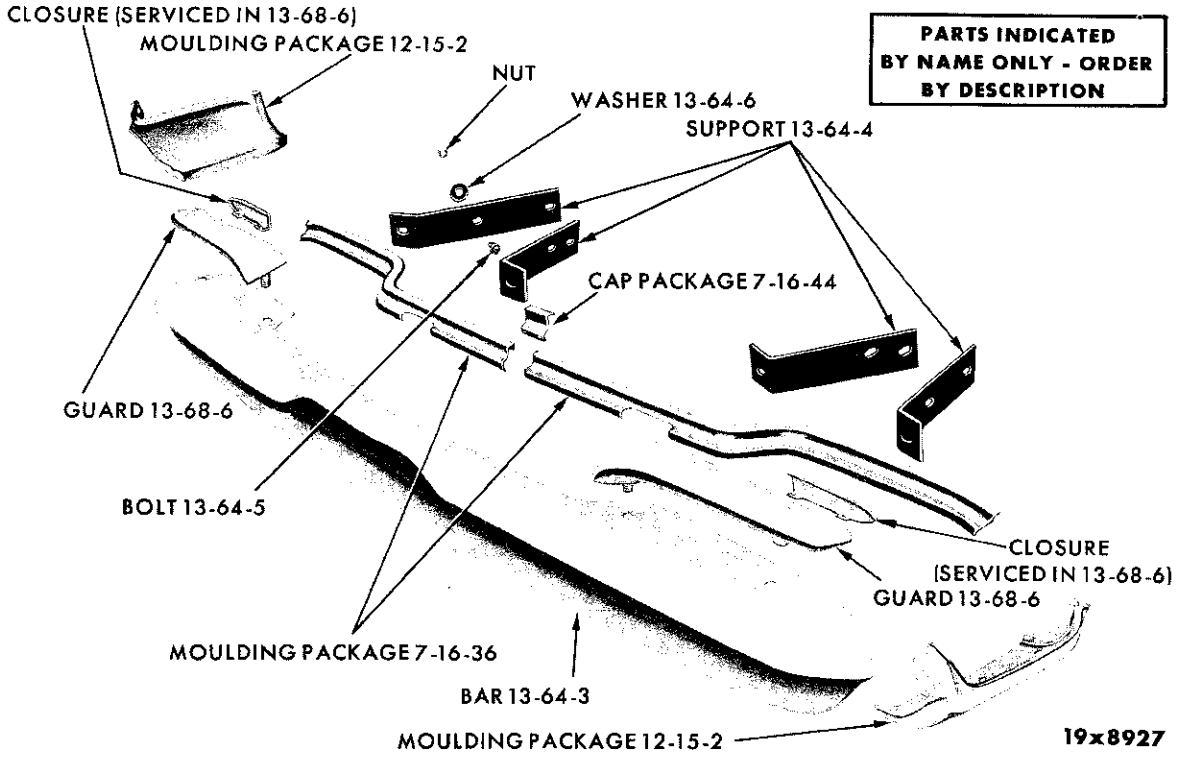

FRONT BUMPER - IMPERIAL SY1

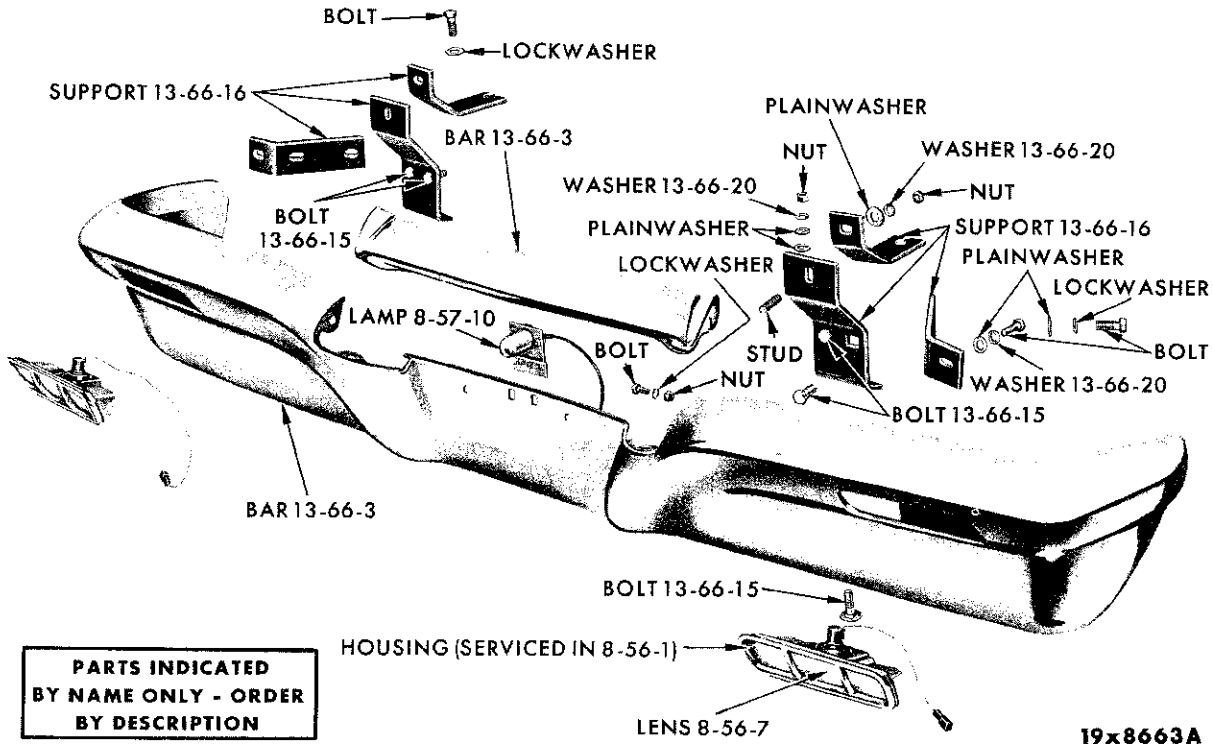

REAR BUMPER - IMPERIAL SY1

MyMopar.com

CODE	PART NAME AND DESCRIPTION	CYL.	PER CAR	VALIANT LANCER	PLYMOUTH DODGE	CHRYSLER IMPERIAL
13-01-0	**FRAME ASSEMBLY**					
13-01-1	FRAME, w/Auto. Trans., SD3, SC1, SC2, (also specify 1 of 2208 080 Idler Arm, code 19-27-31)	8	1	---- ---	*2401 047	*2401 047
	w/Std. Trans., SD3, SC1, SC2	8	1	---- ---	2204 315	2204 315
	SC3	8	1	---- ---	---- ---	2265 411
	Except Cv. Cp., SY1	8	1	---- ---	---- ---	2265 412
	Cv. Cp., SY1	8	1	---- ---	---- ---	2265 413
13-01-6	BRACKET, Front Control Arm Jounce and and Rebound, Right, SD3, SC1, SC2	8	1	---- ---	1734 526	1734 526
	Left, SD3, SC1, SC2	8	1	---- ---	1734 527	1734 527
13-11-0	**FRAME FRONT CROSSMEMBER**					
13-11-5	CROSSMEMBER, No. 1, SD3, SC1, SC2	8	1	---- ---	1940 961	1940 961
	SC3	8	1	---- ---	---- ---	1940 920
	SY1	8	1	---- ---	---- ---	2200 801
	No. 2, SD3, SC1, SC2	8	1	--- ---	2122 620	2122 620
	SC3, SY1	8	1	---- ---	---- ---	2122 621
13-18-0	**FRAME REAR CROSSMEMBER**					
13-18-4	CROSSMEMBER, SY1	8	1	---- ---	---- ---	1944 407
13-18-32	CLIP, Sub-Sidemember Splash Shield, SC3, SY1	8	2	---- ---	---- ---	1674 082
13-33-0	**BATTERY SUPPORT TRAY**					
13-33-61	TRAY, except SD3		1	2208 563	2201 536	
	NUT, Cable Clip Battery Tray, except SD3		1	---- ---	6010 006	
13-33-62	BRACKET, Support	6	2	2074 087		
13-33-63	BOLT, w/WASHER, Bracket	6	4	6022 777		
	To Fender Shield		2	---- ---	6022 895	
	SCREW, w/WASHER, to Yoke		2	---- ---	6022 530	
13-33-68	BRACE, Support, SC3, SY1	8	1	---- ---	---- ---	2260 435
	J/NUT, to Frame, except SD3		1	---- ---	6023 171	
	SCREW, w/WASHER, SD3	8	2	---- ---	6022 530	6022 530
	SCREW, w/WASHER, to Battery Tray, except SD3		1	---- ---	6022 530	
	SCREW, w/WASHER, to Frame, except SD3		1	---- ---	6022 530	
	SCREW, w/WASHER, Tray to Yoke, except SD3		2	---- ---	6022 530	
	NUT, w/RETAINER, to Frame, except SD3		1	---- ---	6012 065	
	NUT, w/RETAINER, to Battery Tray		1	---- ---	6012 065	6012 065
	To Upper Control Arm Bracket, SD3, SC1, SC2	8	1	---- ---	6022 870	6022 870
	SC3, SY1	8	1	---- ---	---- ---	6022 869
13-34-0	**BATTERY HOLD-DOWN STRAP**					
13-34-3	STRAP		1	1828 352	1828 352	1828 352
13-35-0	**BATTERY HEAT SHIELD**					
13-35-1	SHIELD, except SD3		1	---- ---	2201 525	
	SD3, SC1, SC2, SC3	8	1	---- ---	2122 198	2122 198
	SCREW, w/WASHER		2	6022 503	6022 503	6022 503
	NUT, w/RETAINER		2	6010 006	6010 006	
	NUT, w/WASHER, SC1, SC2, SC3	8	2	---- ---	---- ---	6025 004
13-36-0	**BATTERY HOLD-DOWN STUD**					
13-36-5	STUD, Outer, except SD3		1	2074 090	2260 437	1408 915
	SD3	8	1	---- ---	1408 915	
	Inner, except SD3		1	2074 089	2074 089	1408 918
	SD3	8	1	---- ---	1408 918	
	WING NUT, Stud, SP1, SP2, SD1, SD2		2	6023 523	6023 523	

★ Indicates use as required. Numerals in parentheses ( ) refer to notes. Printed in U.S.A.
⊟ Indicates parts not listed in any previous parts book. Prices and specifications subject to change without notice.
* Indicates change or addition. March 8, 1963 Supersedes May 1, 1962.

MyMopar.com

CODE	PART NAME AND DESCRIPTION	CYL.	PER CAR	VALIANT LANCER	PLYMOUTH DODGE	CHRYSLER IMPERIAL
13-54-0	**FRAME REAR SPRING HANGER**					
13-54-4	HANGER, Front, SP1, SP2, SD1, SD2, SY1		2	*2071 760	*2206 632	*1734 502
	Except Sub., SD3, SC1, SC2, SC3	8	2	---- ---	*1948 359	*1948 359
	Sub., SD3, SC1, SC3	8	2	---- ---	*1948 867	*1948 867
	SCREW, w/WASHER, except SD3		★	*6022 362	*6022 255	
	SCREW, w/WASHER, SD3, SC1, SC2, SC3	8	★	---- ---	*6022 362	*6022 362
13-54-9	REINFORCEMENT, Front Hanger Support, Right, except SD3		1	---- ---	*2252 302	
	Left, except SD3		1	---- ---	*2252 303	
13-54-15	HANGER, Rear	6	2	2071 764		
	Except Sub., SD3, SC1, SC2	8	2	---- ---	*1948 880	*1948 880
	Except Sub., SC3	8	2	---- ---	---- ---	1948 354
	Sub., SD3, SC1	8	2	---- ---	*1948 878	*1948 878
	Sub., SC3	8	2	---- ---	---- ---	1948 377
	SY1	8	2	---- ---	---- ---	1735 128
	BOLT, w/WASHER, SD3, SC1, SC2, SC3		★	*6022 362	*6022 362	*6022 362
13-64-0	**FRONT BUMPER FACE BAR**					
13-64-3	BAR, Face, SV1	6	1	2204 030		
	Use w/Guards, SL1	6	1	2208 621		
	Use w/o Guards, SL1	6	1	2074 253		
	Use w/Guards, SP1, SP2		1	---- ---	2203 705	
	Use w/o Guards, SP1, SP2		1	---- ---	2203 704	
	Use w/Guards, SD1, SD2		1	---- ---	2203 751	
	Use w/o Guards, SD1, SD2		1	---- ---	2203 750	
	Use w/Guards, SD3	8	1	---- ---	*2123 923	
	Use w/o Guards, SD3	8	1	---- ---	*2123 922	
	SC1, SC2, SC3	8	1	---- ---	---- ---	2123 808
	SY1	8	1	---- ---	---- ---	2123 800
13-64-4	SUPPORT, Outer, Right, SV1	6	1	2074 230		
	Outer, Left, SV1	6	1	2074 231		
	Inner, Right, SV1	6	1	2074 228		
	Inner, Left, SV1	6	1	2074 229		
	Outer, Right, SL1	6	1	2208 610		
	Outer, Left, SL1	6	1	2208 611		
	Inner, Right, SL1	6	1	2208 608		
	Inner, Left, SL1	6	1	2208 609		
	Right, SP1, SP2		1	---- ---	2265 140	
	Left, SP1, SP2		1	---- ---	2265 141	
	Outer, Right, SD1, SD2		1	---- ---	2265 132	
	Outer, Left, SD1, SD2		1	---- ---	2265 133	
	Inner, Right, SD1, SD2		1	---- ---	2265 134	
	Inner, Left, SD1, SD2		1	---- ---	2265 135	
	Right, SC1, SC2	8	1	---- ---	---- ---	2123 928
	Left, SC1, SC2	8	1	---- ---	---- ---	2123 929
	Right, SC3	8	1	---- ---	---- ---	2123 804
	Left, SC3	8	1	---- ---	---- ---	2123 805
	Outer, Right, SY1	8	1	---- ---	---- ---	2123 796
	Outer, Left, SY1	8	1	---- ---	---- ---	2123 797
	Inner, Right, SY1	8	1	---- ---	---- ---	2123 798
	Inner, Left, SY1	8	1	---- ---	---- ---	2123 799
	Bumper to Guard, Right, SL1	6	1	2208 612		
	Bumper to Guard, Left, SL1	6	1	2208 613		
13-64-5	BOLT, Bumper to Support, SV1		★	2074 225	---- ---	1551 097
	SL1		★	1737 430	6023 011	
	Bumper to Stabilizer, SV1	6	2	2074 225		
	SL1	6	2	1737 430		
	Bumper to Frame, SD3	8	4	---- ---	*6022 992	
	Bumper to Extension, SC1, SC2, SC3	8	2	---- ---	---- ---	1551 097
	Support to Frame, SC1, SC2		4	6023 138	6023 138	6022 992
	Bumper Bracket to Support, SY1	8	2	---- ---	---- ---	1551 766
	STUD, Support to Frame, SC3	8	4	---- ---	---- ---	2123 902

★ Indicates use as required. Numerals in parentheses ( ) refer to notes. Printed in U.S.A.
⊟ Indicates parts not listed in any previous parts book. Prices and specifications subject to change without notice.
May 1, 1962 Supersedes Sept. 15, 1961. * Indicates change or addition.

MyMopar.com

CODE	PART NAME AND DESCRIPTION	CYL.	PER CAR	VALIANT LANCER	PLYMOUTH DODGE	CHRYSLER IMPERIAL
13-64-0	**FRONT BUMPER FACE BAR - Cont'd**					
13-64-6	WASHER, Bumper to Frame Bolt Plain	6	4	6023 137		
	Bumper to Frame Bolt, SD3	8	4	---- ---	6022 899	
	Support to Frame Bolt, except SD3		8	---- ---	574 812	
	Support to Frame Plain, SC1, SC2, SC3		4	6023 137	6023 137	6022 899
	Support to Frame, SY1	8	20	---- ---	---- ---	1948 969
13-64-27	CAP, Right, SD3	8	1	---- ---	2123 926	
	Left, SD3	8	1	---- ---	2123 927	
13-64-56	SPEED-CLIP, Support to Frame Bolt, SC1, SC2	8	4	---- ---	---- ---	1325 239
	Bumper to Frame, SD3, SC1, SC2	8	4	---- ---	1325 239	
13-64-97	EXTENSION, Support Bumper, Right, SC1, SC2	8	1	---- ---	---- ---	2123 930
	Left, SC1, SC2	8	1	---- ---	---- ---	2123 931
	Right, SC3	8	1	---- ---	---- ---	2123 806
	Left, SC3	8	1	---- ---	---- ---	2123 807
13-64-149	STABILIZER, SV1	6	2	2074 214		
	SL1	6	2	2208 619		
13-64-150	NUT, Stabilizer, SL1	6	2	327 072		
13-66-0	**REAR BUMPER FACE BAR**					
13-66-3	BAR, Face, SV1	6	1	2204 034		
	SL1	6	1	2074 255		
	Except Sub., SP1, SP2		1	---- ---	2203 723	
	Except Sub., use w/o Guards, SD1, SD2		1	---- ---	2203 760	
	Except Sub., use w/Guards, SD1, SD2		1	---- ---	2203 761	
	Sub., use w/o Step Pads, except SD3		1	---- ---	2204 000	
	Sub., use w/Step Pads, except SD3		1	---- ---	2204 001	
	Except Sub., use w/o Guards, SD3, SC1, SC2, SC3	8	1	---- ---	2123 792	2123 792
	Except Sub., use w/Guards, SD3, SC1, SC2, SC3	8	1	---- ---	2203 815	2203 815
	SY1	8	1	---- ---	---- ---	1940 392
	Center, Sub., SD3, SC1, SC3	8	1	---- ---	2123 860	2123 860
	EXTENSION, Right, Sub., SD3, SC1, SC3	8	1	---- ---	2123 814	2123 814
	EXTENSION, Left, Sub., SD3, SC1, SC3	8	1	---- ---	2123 813	2123 813
	TIE BAR, SY1	8	1	---- ---	---- ---	1940 393
13-66-15	BOLT, Bumper to Support, SV1, except SD3		★	2074 225	1737 430	
	SL1	6	★	1737 430		
	SD3, SC1, SC2, SC3	8	★	---- ---	1551 097	1551 097
	Support to Frame, except SD3		2	---- ---	6023 138	
	Support to Crossmember, SD3, SC1, SC2, SC3	8	4	---- ---	6022 904	6022 904
	Vertical Support to Frame, SY1	8	2	---- ---	1945 945	1945 945
	Stabilizer to Bumper, SD3, SC1, SC2, SC3		2	2074 225	1551 098	1551 098
	PLUG, Step Pad Hole, Sub., SD3, SC1, SC3	8	2	---- ---	6012 070	6012 070
	STUD, Bracket to Upper Support, SY1	8	2	---- ---	---- ---	6022 037
	SCREW, w/WASHER, Support to Frame, except SD3		2	---- ---	6023 148	
13-66-16	SUPPORT, Right, except Sub., SV1	6	1	2204 036		
	Left, except Sub., SV1	6	1	2204 037		
	Right, Sub., SV1	6	1	2074 226		
	Left, Sub., SV1	6	1	2074 227		
	Right, SL1	6	1	2208 614		
	Left, SL1	6	1	2208 615		
	Right, Outer, except Sub., SP1, SP2		1	---- ---	2265 142	
	Left, Outer, except Sub., SP1, SP2		1	---- ---	2265 143	
	Right, Inner, except Sub., SP1, SP2		1	---- ---	2265 144	
	Left, Inner, except Sub., SP1, SP2		1	---- ---	2265 145	
	Right, Outer, except Sub., SD1, SD2		1	---- ---	2265 136	
	Left, Outer, except Sub., SD1, SD2		1	---- ---	2265 137	

★ Indicates use as required. Numerals in parentheses ( ) refer to notes. Printed in U.S.A.
⊟ Indicates parts not listed in any previous parts book. Prices and specifications subject to change without notice.
* Indicates change or addition. March 8, 1963 Supersedes May 1, 1962.

MyMopar.com

CODE	PART NAME AND DESCRIPTION	CYL.	PER CAR	VALIANT LANCER	PLYMOUTH DODGE	CHRYSLER IMPERIAL
13-66-0	**REAR BUMPER FACE BAR - Cont'd**					
13-66-16	SUPPORT - Cont'd					
	Right, Inner, except Sub., SD1, SD2		1	---- ---	2265 138	
	Left, Inner, except Sub., SD1, SD2		1	---- ---	2265 139	
	Right, Outer, Sub., except SD3		1	---- ---	*2204 010	
	Left, Outer, Sub., except SD3		1	---- ---	*2204 011	
	Right, Inner, Sub., except SD3		1	---- ---	*2204 008	
	Left, Inner, Sub., except SD3		1	---- ---	*2204 009	
	Right, except Sub., SD3, SC1, SC2, SC3	8	1	---- ---	*2123 834	*2123 834
	Left, except Sub., SD3, SC1, SC2, SC3	8	1	---- ---	*2123 835	*2123 835
	Right, Sub., SD3, SC1, SC3	8	1	---- ---	*2123 856	*2123 856
	Left, Sub., SD3, SC1, SC3	8	1	---- ---	*2123 857	*2123 857
	Right, Outer, SY1	8	1	---- ---	---- ---	1941 032
	Left, Outer, SY1	8	1	---- ---	---- ---	1941 033
	Vertical, SY1	8	2	---- ---	---- ---	1941 031
	Upper, SY1	8	2	---- ---	---- ---	1941 034
13-66-18	SHIM, Support to Frame, .06" thk., SY1	8	★	---- ---	---- ---	6010 025
13-66-20	WASHER, Vertical Support to Frame Bolt Plain, SY1	8	4	---- ---	---- ---	1616 746
	Support to Frame Bolt Plain, SD1, SD2		★	---- ---	6023 137	6022 899
	SD3	8	4	---- ---	*6022 899	
	Stabilizer to Quarter Panel, Sub., SD3	8	2	---- ---	*6022 339	*6022 339
13-66-24	PLATE, Bumper to Frame Support, SD3, SC1, SC2, SC3	8	4	---- ---	*2123 938	*2123 938
	Bumper to Support, Sub., SD3, SC1, SC3	8	2	---- ---	*1948 015	*1948 015
13-66-106	DEFLECTOR, Stone	6	1	2242 948		
	Except Sub., SP1, SP2		1	---- ---	2166 014	
	Except Sub., SD1, SD2		1	---- ---	2166 013	
13-66-123	FASTENER, Jacking Bracket Pad, Sub., SD3, SC1, SC3	8	2	---- ---	*6006 456	*6006 456
13-66-135	STABILIZER, SV1	6	2	2204 039		
	SL1	6	2	2208 616		
	Except Sub., SD3, SC1, SC2, SC3	8	2	---- ---	*2123 849	*2123 849
	Sub., Right, SD3, SC1, SC3	8	1	---- ---	*2123 940	*2123 940
	Sub., Left, SD3, SC1, SC3	8	1	---- ---	*2123 939	*2123 939
	NUT, w/WASHER, to Qtr. Panel	6	2	6012 008		
	SCREW, w/WASHER, to Qtr. Panel, Sub., SD3, SC1, SC3	8	2	---- ---	*6022 339	*6022 339
	BOLT, to Bumper, Sub., SD3, SC1, SC3	8	2	---- ---	*6012 016	*6012 016
13-66-147	STEP PAD, Sub., except SD3		2	---- ---	*2204 020	
	Sub., SD3, SC1, SC3	8	2	---- ---	*2123 885	*2123 885
13-68-0	**BUMPER GUARDS**					
13-68-6	GUARD, Front, SV1	6	2	2074 233		
	Front, Right, SL1	6	1	2208 602		
	Front, Left, SL1	6	1	2208 601		
	Front, SP1, SP2		2	---- ---	2203 715	
	Front, Right, SD1, SD2		1	---- ---	2203 752	
	Front, Left, SD1, SD2		1	---- ---	2203 753	
	Front, Right, SD3	8	1	---- ---	*2123 880	
	Front, Left, SD3	8	1	---- ---	*2123 881	
	Front, Right, SY1	8	1	---- ---	---- ---	2123 920
	Front, Left, SY1	8	1	---- ---	---- ---	2123 921
	Rear, SV1	6	2	2074 235		
	Rear, SL1	6	2	2208 603		

★ Indicates use as required. Numerals in parentheses ( ) refer to notes. Printed in U.S.A.
⊟ Indicates parts not listed in any previous parts book. Prices and specifications subject to change without notice.
May 1, 1962 Supersedes Nov. 30, 1961. * Indicates change or addition.

MyMopar.com

CODE	PART NAME AND DESCRIPTION	CYL.	PER CAR	VALIANT LANCER	PLYMOUTH DODGE	CHRYSLER IMPERIAL
13-68-0	**BUMPER GUARDS - Cont'd**					
13-68-6	GUARD - Cont'd					
	Rear, Right, except Sub., SD1, SD2		1	---- ---	2203 753	
	Rear, Left, except Sub., SD1, SD2		1	---- ---	2203 752	
	Rear, Right, except Sub., SD3, SC1, SC2, SC3	8	1	---- ---	2203 802	2203 802
	Rear, Left, except Sub., SD3, SC1, SC2, SC3	8	1	---- ---	2203 803	2203 803
13-68-18	CUSHION, Guard, Front, Right, SD1, SD2		1	---- ---	2203 754	
	Front, Left, SD1, SD2		1	---- ---	2203 755	
	Front, SD3	8	2	---- ---	2123 884	
	Rear, Right, except Sub., SD1, SD2		1	---- ---	2203 755	
	Rear, Left, except Sub., SD1, SD2		1	---- ---	2203 754	
	Rear, except Sub. SD3, SC1, SC2, SC3	8	2	---- ---	2203 801	2203 801
13-72-0	**BUMPER JACK**					
13-72-1	JACK, SV1	6	1	2075 142		
	SL1	6	1	2201 039		
13-72-2	JACK HANDLE, SC1, SC2, SC3		1	*1736 990	*2201 009	*2201 009
	SY1	8	1	---- ---	---- ---	2201 010
13-72-3	HOOK, Jack, SP1, SP2		1	---- ---	2204 072	
	SD1, SD2		1	---- ---	2204 074	
	Except Sub., SD3, SC1, SC2, SC3	8	1	---- ---	2203 386	2204 073
	Sub., SD3, SC1, SC3	8	1	---- ---	2203 387	2203 387
	SY1	8	1	---- ---	---- ---	2203 388
13-72-4	BAR and BASE PACKAGE, Rack		1	---- ---	2275 450	2275 450

NOTES

MyMopar.com

CODE	PART NAME AND DESCRIPTION	CYL.	PER CAR	VALIANT LANCER	PLYMOUTH DODGE	CHRYSLER IMPERIAL

NOTES

MyMopar.com

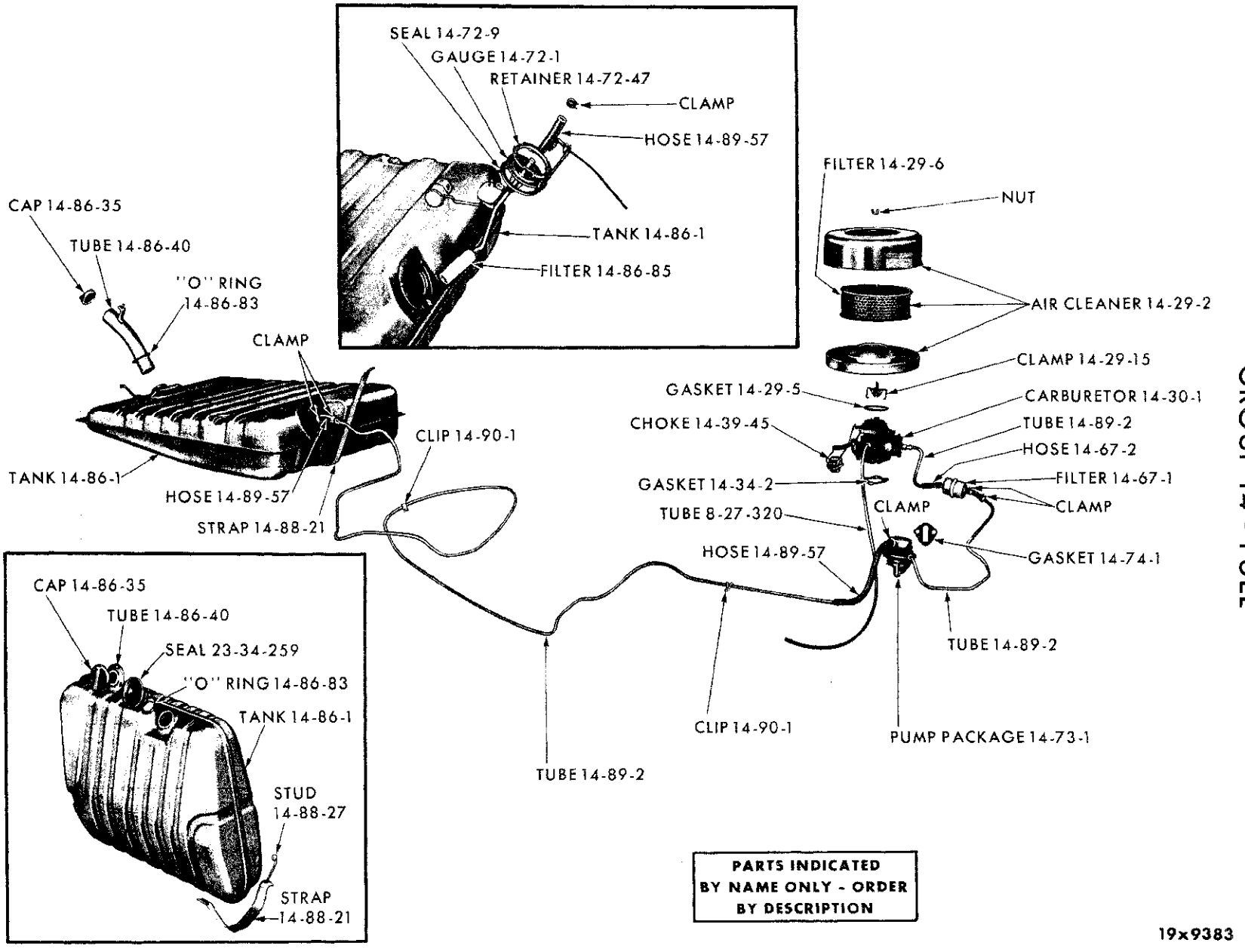

FUEL SYSTEM (6 CYLINDER) - EXCEPT CHRYSLER SC1-2-3 AND IMPERIAL SY1

MyMopar.com

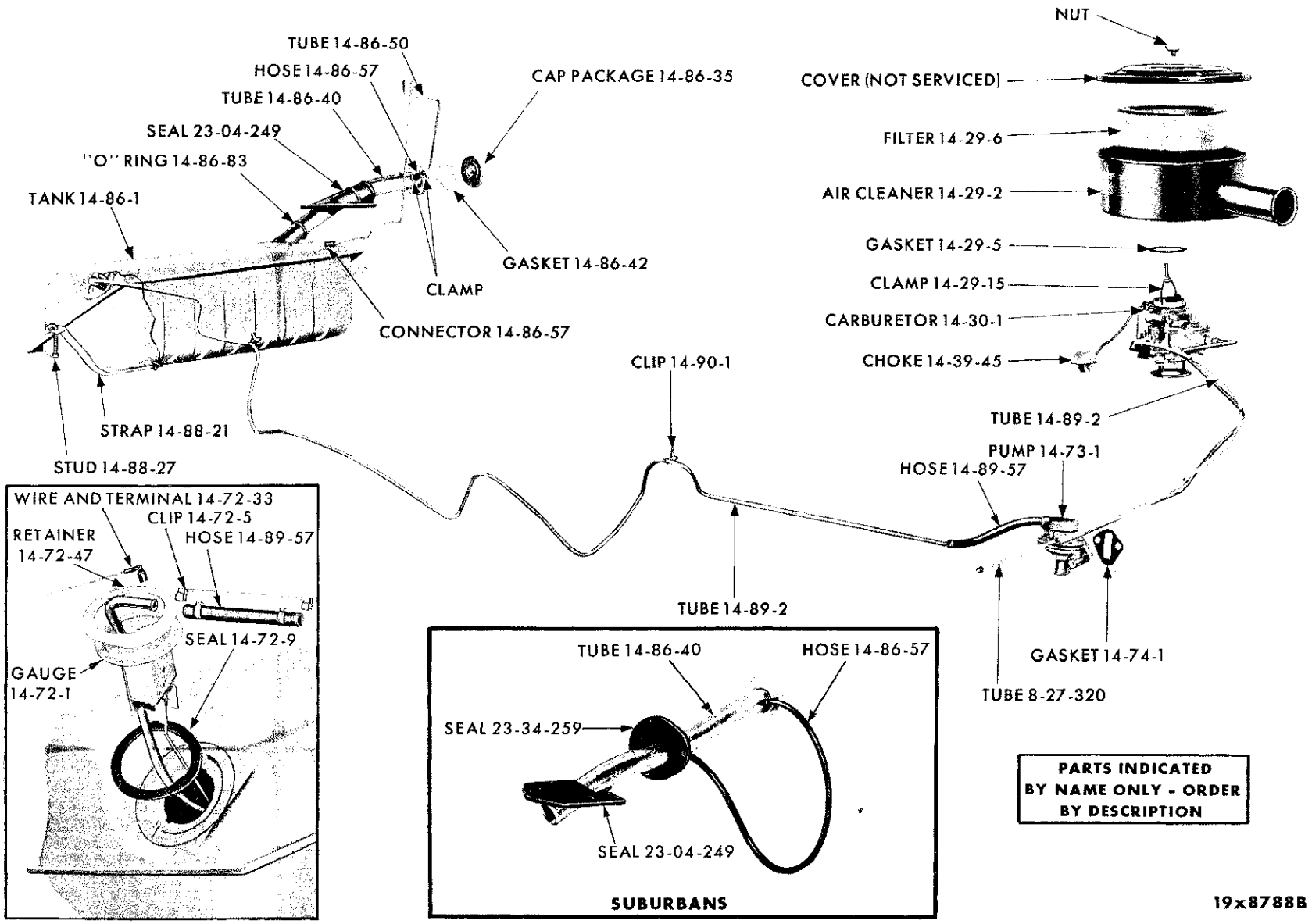

FUEL SYSTEM - VALIANT SV1 AND LANCER SL1

MyMopar.com

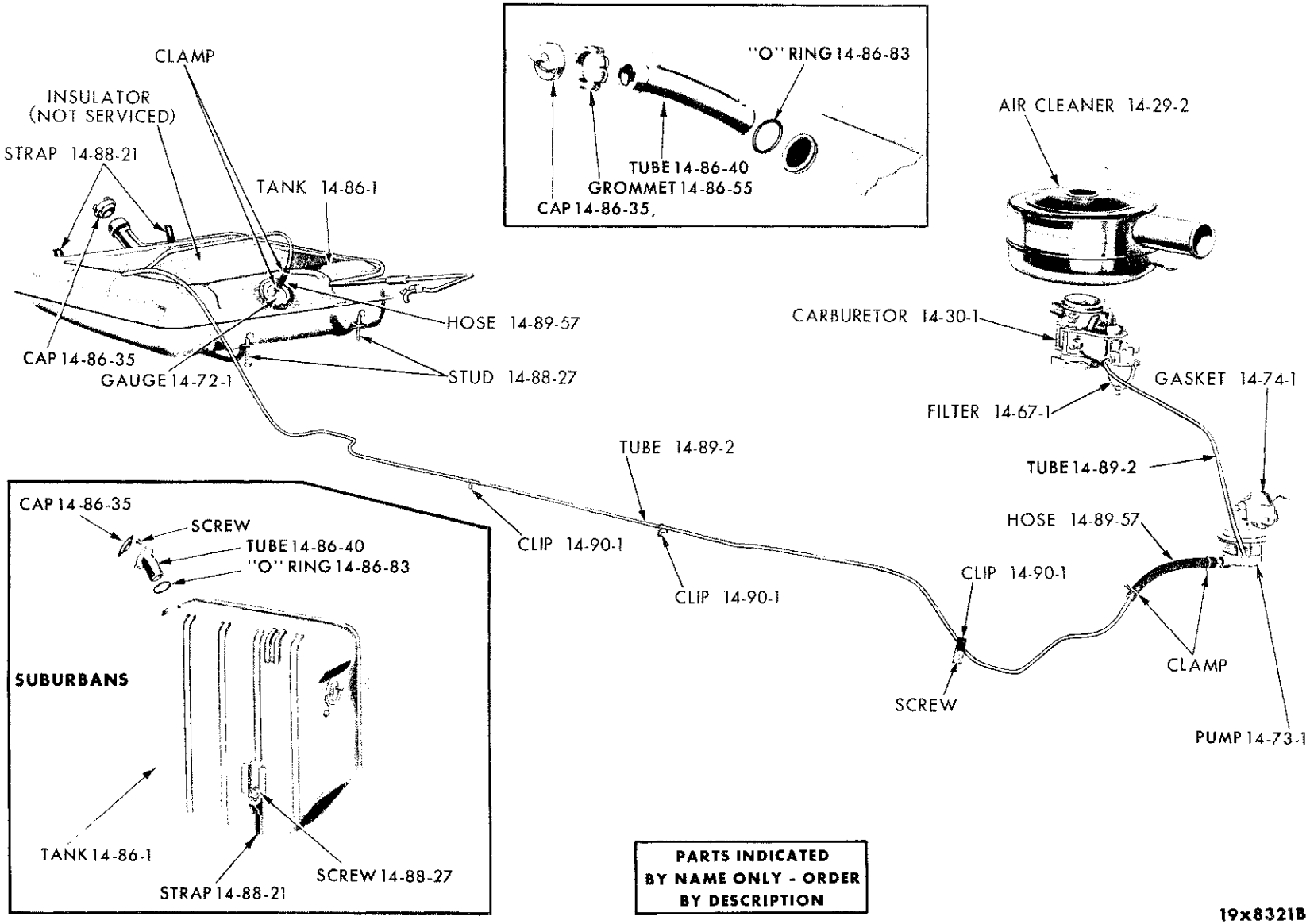

FUEL SYSTEM - CHRYSLER SC1-2-3

MyMopar.com

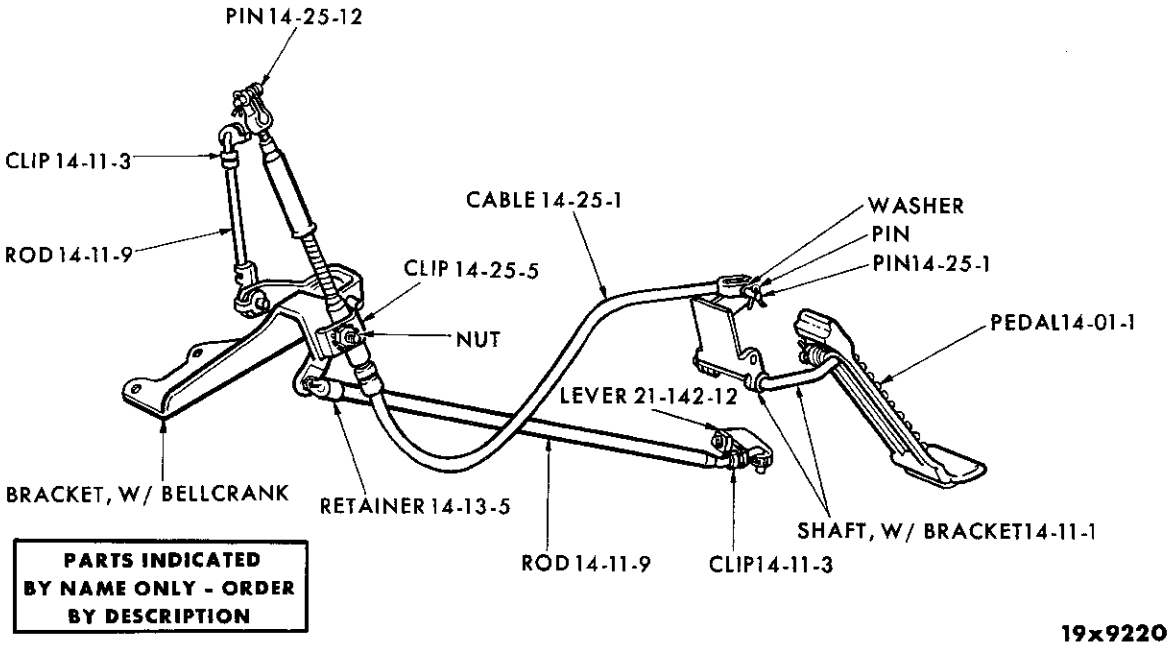

THROTTLE LINKAGE - PLYMOUTH SP1 AND DODGE SD1

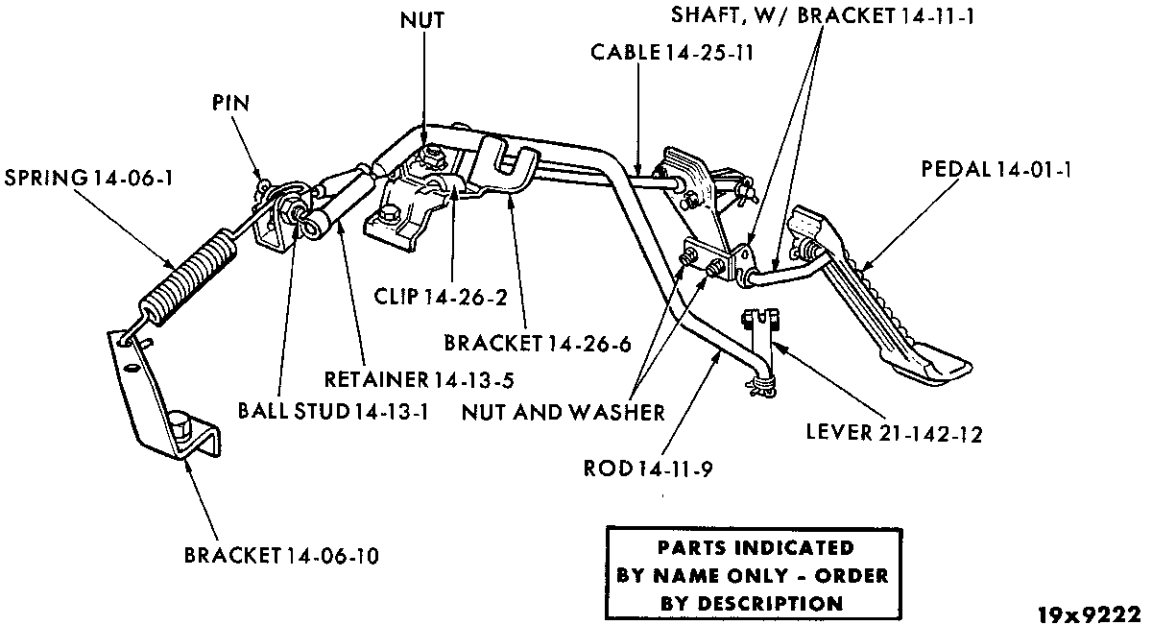

THROTTLE LINKAGE (V8 CYLINDER) - PLYMOUTH SP2 AND DODGE SD2 ("A" ENGINE)

MyMopar.com

CODE	PART NAME AND DESCRIPTION	CYL.	PER CAR	VALIANT LANCER	PLYMOUTH DODGE	CHRYSLER IMPERIAL

NOTES

MyMopar.com

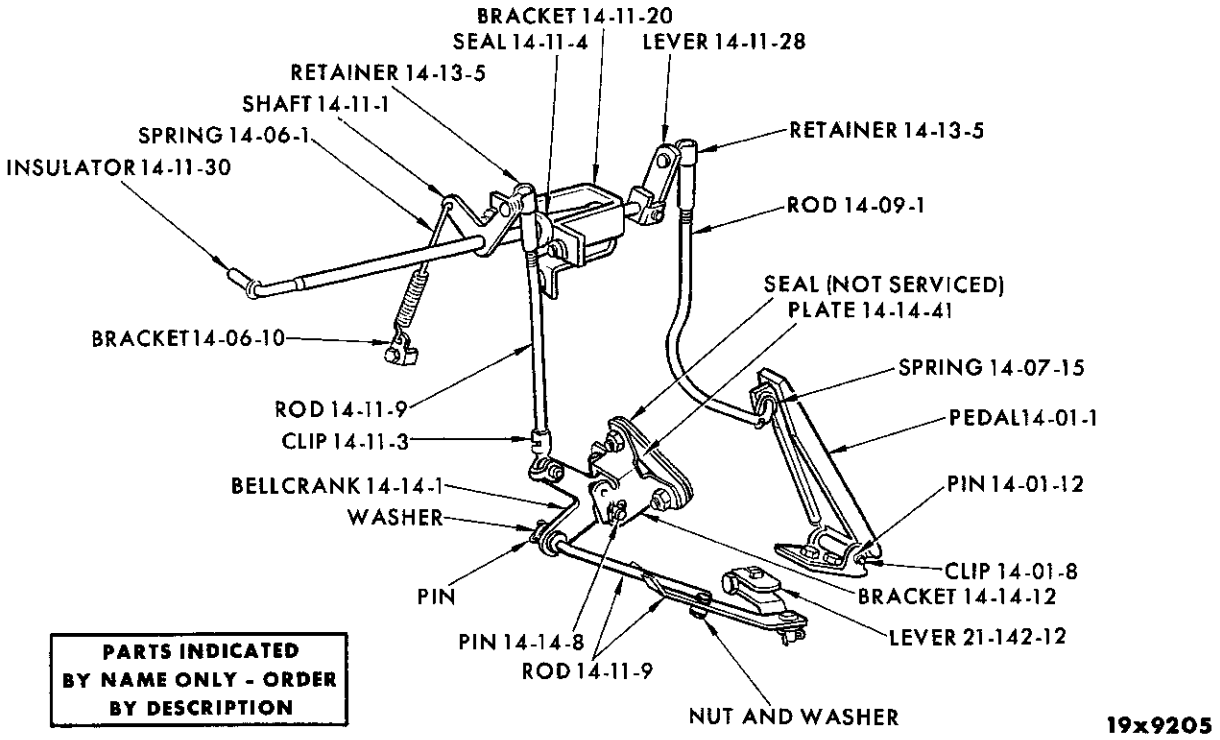

THROTTLE LINKAGE (6 CYLINDER) - VALIANT SV1 AND LANCER SL1 (AUTOMATIC TRANSMISSION)

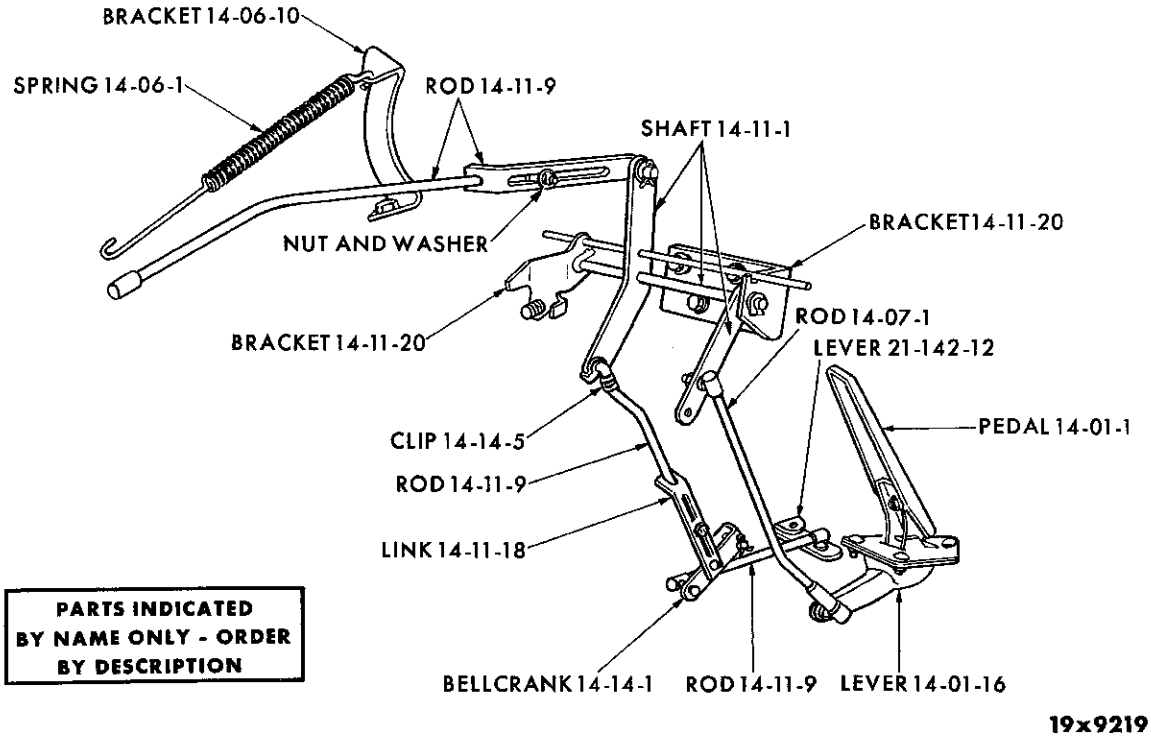

THROTTLE LINKAGE - CHRYSLER SC1-2-3 (EXCEPT HIGH PERFORMANCE)

MyMopar.com

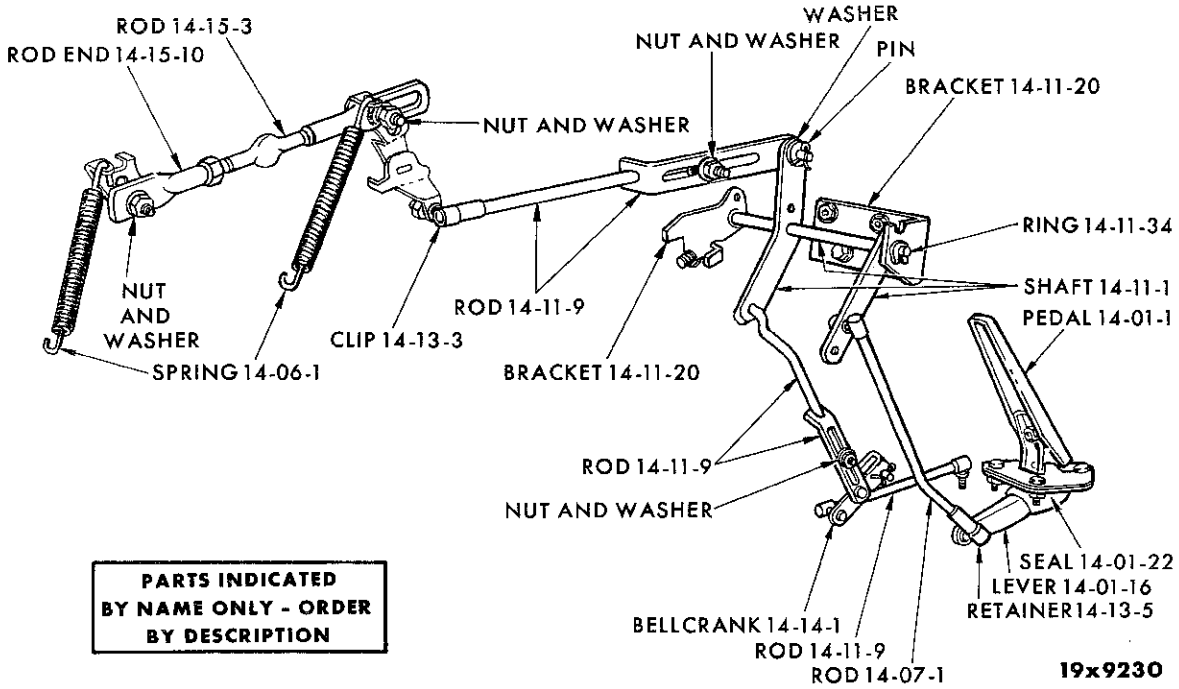

PARTS INDICATED BY NAME ONLY - ORDER BY DESCRIPTION

THROTTLE LINKAGE - CHRYSLER SC2 (HIGH PERFORMANCE)

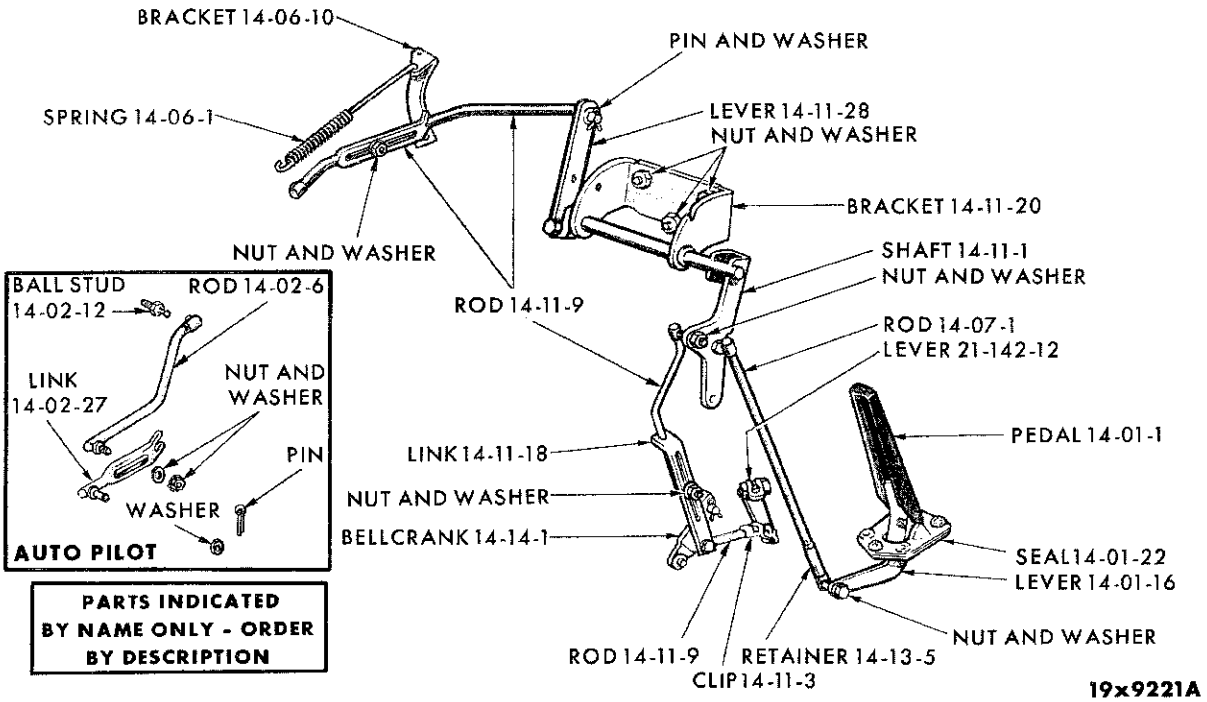

PARTS INDICATED BY NAME ONLY - ORDER BY DESCRIPTION

THROTTLE LINKAGE (WITH AUTO PILOT LINKAGE) - IMPERIAL SY1

MyMopar.com

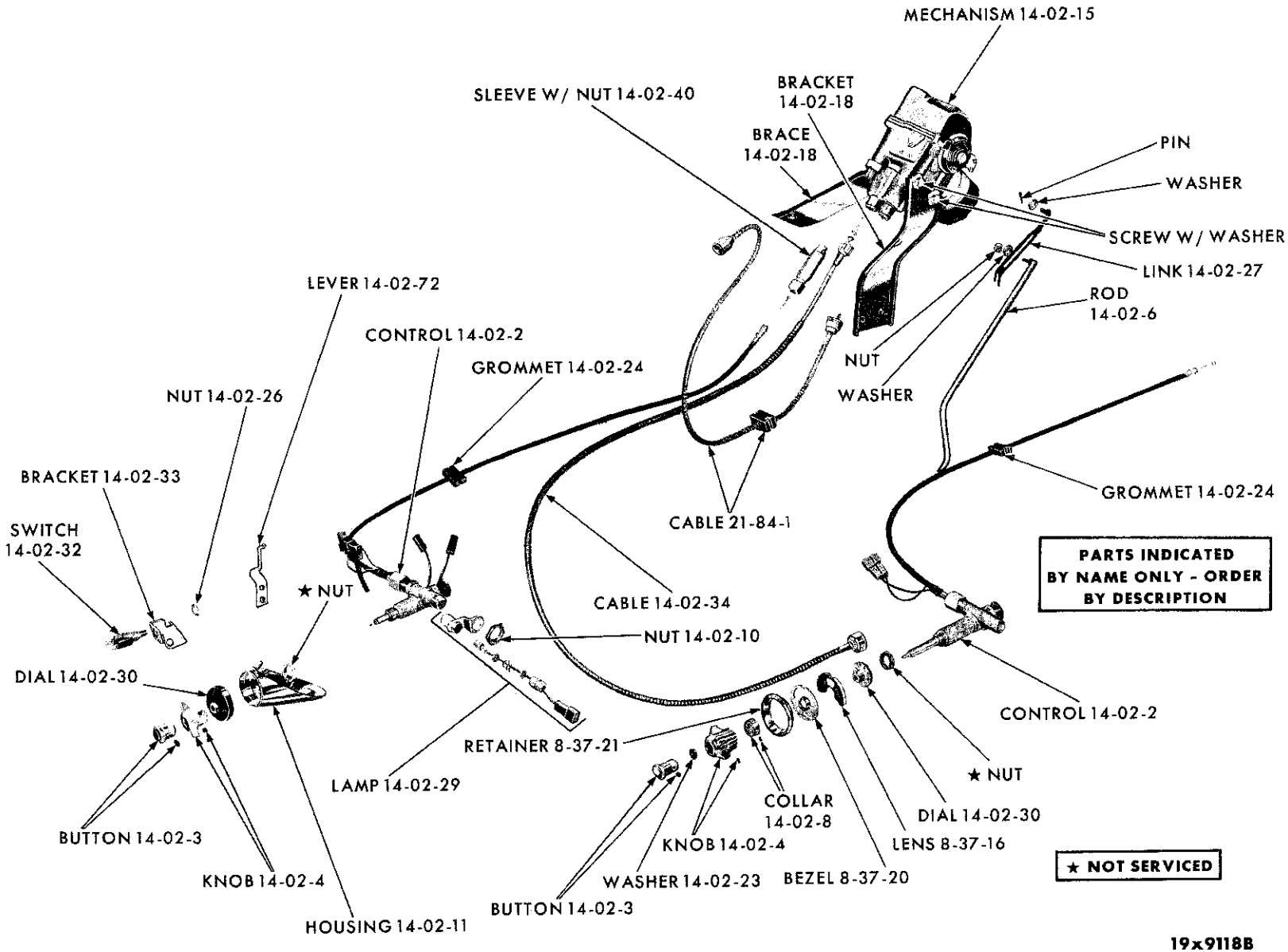

AUTO PILOT SYSTEM

MyMopar.com

CODE	PART NAME AND DESCRIPTION	CYL.	PER CAR	VALIANT LANCER	PLYMOUTH DODGE	CHRYSLER IMPERIAL
14-01-0	**ACCELERATOR PEDAL**					
14-01-1	PEDAL, Except SD3		1	*2264 535	*2268 206	
	SD3	8	1	---- ---	*2121 967	
	Except SY1	8	1	---- ---	---- ---	2121 967
	SY1	8	1	---- ---	---- ---	2128 664
14-01-3	SHIELD, Pedal Lever, SC1 Police Car	8	1	---- ---	---- ---	2129 264
14-01-8	CLIP, Hinge Pin	6	1	1947 818		
14-01-12	PIN, Pedal Hinge	6	1	1947 817		
14-01-15	BRACKET, Pedal Hinge	6	1	1947 815		
14-01-16	LEVER, Pedal, except SY1		1	---- ---	1947 311	1947 311
	SY1	8	1	---- ---	---- ---	2264 472
14-01-22	SEAL, Lever		1	---- ---	1947 415	1947 415
14-01-23	SCREW, Hinge Bracket		2	1947 301	2202 583	
14-01-25	PLATE, Pedal Linkage Mounting		1	---- ---	2254 357	
	Pedal to Floor Pan	6	1	2081 074		
	Accelerator Pedal Mounting Reinforcement		1	---- ---	⊟2255 583	
14-01-30	BUSHING, Pedal Bracket	6	1	1859 768		
14-01-31	INSULATOR, Pedal Bracket Sound	6	1	1859 767		
14-02-0	**AUTOMATIC PILOT**					
14-02-1	AUTOMATIC PILOT PACKAGE, except SY1	8	1	---- ---	---- ---	2290 419
	SY1	8	1	---- ---	---- ---	2290 420
14-02-2	CONTROL, except SY1	8	1	---- ---	---- ---	2258 852
	SY1	8	1	---- ---	---- ---	2258 853
14-02-3	BUTTON, Control Reset, except SY1	8	1	---- ---	---- ---	1972 902
	SY1	8	1	---- ---	---- ---	2258 859
14-02-4	KNOB, Control, except SY1	8	1	---- ---	---- ---	1887 798
	SY1	8	1	---- ---	---- ---	2258 858
14-02-6	ROD, Accelerator Shaft to Auto. Pilot, except SY1	8	1	---- ---	---- ---	2268 556
	SY1, 14 1/8" long	8	1	---- ---	---- ---	⊟2264 604
	SY1, 11" long	8	1	---- ---	---- ---	*2268 556
14-02-8	COLLAR, Control Knob, SY1	8	1	---- ---	---- ---	2198 361
14-02-10	NUT, Mounting Brace	8	1	---- ---	---- ---	2076 232
14-02-11	HOUSING, Control, except SY1	8	1	---- ---	---- ---	2291 148
14-02-12	BALL STUD, Accelerator Shaft Lever	8	1	---- ---	---- ---	1858 936
14-02-15	MECHANISM, Drive	8	1	---- ---	---- ---	2257 989
14-02-18	BRACKET, Mounting, SC1, SC2	8	1	---- ---	---- ---	2123 513
	Mounting, SC3, SY1	8	1	---- ---	---- ---	2201 080
	BRACE, Mounting, SC1, SC2	8	1	---- ---	---- ---	2123 515
	Mounting, SC3, SY1	8	1	---- ---	---- ---	2201 082
14-02-23	WASHER, Reset Button	8	1	---- ---	---- ---	1972 906
14-02-24	GROMMET, Control	8	1	---- ---	---- ---	*2097 816

★ Indicates use as required. Numerals in parentheses ( ) refer to notes. Printed in U.S.A.
⊟ Indicates parts not listed in any previous parts book. Prices and specifications subject to change without notice.
* Indicates change or addition. May 1, 1962 Supersedes Nov. 30, 1961.

MyMopar.com

CODE	PART NAME AND DESCRIPTION	CYL.	PER CAR	VALIANT LANCER	PLYMOUTH DODGE	CHRYSLER IMPERIAL
14-02-0	**AUTOMATIC PILOT - Cont'd**					
14-02-26	NUT, Brake Switch Mounting	8	1	---- ---	---- ---	1886 313
14-02-27	LINK, Accelerator Shaft to Auto. Pilot Rod Adjusting, except SY1	8	1	---- ---	---- ---	2268 557
	SY1	8	1	---- ---	---- ---	2268 557
14-02-28	STUD, Control Housing, except SY1	8	2	---- ---	---- ---	6010 020
14-02-29	LAMP, Control, except SY1	8	1	---- ---	---- ---	2097 471
	SY1	8	1	---- ---	---- ---	2257 272
14-02-30	DIAL, Control, except SY1	8	1	---- ---	---- ---	1887 794
	SY1	8	1	---- ---	---- ---	2197 156
14-02-32	SWITCH, Brake, Mechanical	8	1	---- ---	---- ---	1885 974
14-02-33	BRACKET, Cutout Switch	8	1	---- ---	---- ---	2071 075
14-02-34	CABLE, Drive Mechanism	8	1	---- ---	---- ---	2290 966
14-02-36	HOLDER, Fuse	8	1	---- ---	---- ---	1971 742
14-02-40	SLEEVE, w/NUT, Drive Mechanism	8	1	---- ---	---- ---	*1881 965
14-02-68	NUT, Control Lamp Bracket, except SY1	8	1	---- ---	---- ---	6008 070
14-02-70	SCREW, Calibration Adjusting, except SY1	8	1	---- ---	---- ---	2256 702
14-02-72	LEVER, Cutout Switch	8	1	---- ---	---- ---	*2401 698
	w/Power Brake	8	1	---- ---	---- ---	2401 698
14-06-0	**ACCELERATOR PEDAL RETURN SPRING**					
14-06-1	SPRING	6	1	2264 376	1138 102	
		8	1	---- ---	2264 735	
	SP2, SD2, High Performance, w/o Alternator	8	1	---- ---	2264 735	
	SP2, SD2, High Performance, w/Alternator	8	1	---- ---	2265 027	
	SD3	8	1	---- ---	2264 382	
	High Performance	8	1	---- ---	---- ---	1320 133
	Except SY1	8	1	---- ---	---- ---	2264 382
	SY1	8	1	---- ---	---- ---	1856 580
14-06-10	BRACKET	6	1	2128 776		
	w/o Governor, SP1, SD1	6	1	---- ---	2264 686	
	w/Governor, SP1, SD1	6	1	---- ---	2268 188	
	SP2, SD2	8	1	---- ---	2264 736	
	High Performance	8	1	---- ---	2264 751	
	w/Air Cond.	8	1	---- ---	2268 117	
	Except High Performance, SD3	8	1	---- ---	1827 999	1827 999
	High Performance	8	1	---- ---	---- ---	1851 753
	w/Air Cond.	8	1	---- ---	---- ---	2268 105
14-07-0	**ACCELERATOR PEDAL TO ACCELERATOR SHAFT ROD**					
14-07-1	ROD	6	1	2264 538		
	SD3	8	1	---- ---	1859 396	
	SY1	8	1	---- ---	---- ---	2264 474
	Except SY1	8	1	---- ---	---- ---	1859 396
14-07-15	SPRING, Accelerator Pedal to Accelerator Shaft Rod	6	1	2128 417		

★ Indicates use as required. Numerals in parentheses ( ) refer to notes. Printed in U.S.A.
⊟ Indicates parts not listed in any previous parts book. Prices and specifications subject to change without notice.
May 1, 1962 Supersedes Nov. 30, 1961. * Indicates change or addition.

MyMopar.com

CODE	PART NAME AND DESCRIPTION	CYL.	PER CAR	VALIANT LANCER	PLYMOUTH DODGE	CHRYSLER IMPERIAL
14-08-0	**CARBURETOR LEVER RETURN SPRING**					
14-08-36	SPRING, SC2, w/2-4 Barrel Carburetors	8	1	---- ---	---- ---	1320 133
14-08-37	BRACKET, Spring, w/o Air Conditioning, 2-4 Barrel Carburetors, SC2	8	1	---- ---	---- ---	1851 752
	w/Air Conditioning, 2-4 Barrel Carburetors, SC2.	8	1	---- ---	---- ---	2268 106
14-11-0	**ACCELERATOR SHAFT**					
14-11-1	SHAFT, w/Std. or Auto. Trans.	6	1	2203 237		
	SV1, SL1, Taxi, w/Governor, w/Std. Trans.	6	1	2203 237		
	SV1, SL1, Taxi, w/Governor, w/Auto. Trans.	6	1	2264 720		
	SV1, SL1, High Performance, w/Std. or Auto. Trans.	6	1	2264 720		
	SP1, SP2, SD1, SD2		1	---- ---	2268 344	
	w/ or w/o Auto. Trans., SP2, SD2 High Performance	8	1	---- ---	2268 344	
	w/Std. Trans., SD3, SC1	8	1	---- ---	2264 333	
	w/Auto. Trans., SD3, SC1, SC2, SC3	8	1	---- ---	2264 333	
	w/All Trans., SC2 High Performance, 2-4 Barrel Carburetors	8	1	---- ---	---- ---	2264 333
	SY1.	8	1	---- ---	---- ---	1859 991
14-11-3	CLIP, Accelerator Shaft to Bell Crank Rod	6	1	2120 878		
	Bell Crank to Carburetor Rod, Upper	6	1	---- ---	6008 144	
	Lower	6	1	---- ---	1652 093	
	Bell Crank to Trans. Rod, SY1		1	---- ---	667 774	667 774
14-11-4	SEAL, Shaft, w/o Governor	6	1	2128 474		
	SV1, SL1, Taxi, w/Governor	6	1	2264 167		
	SL1 High Performance	6	1	2264 167		
14-11-9	ROD, Shaft to Bell Crank, w/Auto. Trans.	6	1	2203 235		
	Shaft to Bell Crank, w/Auto. Trans., w/Governor, Taxi	6	1	2264 057		
	Bell Crank to Trans., w/STUD	6	1	2120 814		
	Bell Crank to Trans., w/SLOT	6	1	2202 428		
	Bell Crank to Carburetor, w/Auto. Trans.	6	1	2268 356		
	Bell Crank to Carburetor, w/Auto. Trans.	6	1	---- ---	2268 356	
	Bell Crank to Carburetor, Taxi	6	1	---- ---	2268 385	
	Bell Crank to Trans.	6	1	---- ---	2268 358	
	Carburetor to Trans., SP2, SD2	8	1	---- ---	2264 742	
	Shaft to Carburetor, w/STUD, SD3, SC1, SC2, SC3	8	1	---- ---	2120 968	2120 968
	Shaft to Carburetor, w/SLOT, SD3, SC1, SC2, SC3	8	1	---- ---	2129 569	2129 569
	Shaft to Bell Crank, w/STUD, SD3, SC1, SC2, SC3	8	1	---- ---	2264 640	2264 640
	Shaft to Carburetor, w/STUD, SC2 High Performance	8	1	---- ---	---- ---	2129 910
	Bell Crank to Trans., SD3, SC1, SC2, SC3	8	1	---- ---	2264 648	2264 648
	Shaft to Carburetor, w/STUD, SY1	8	1	---- ---	---- ---	*1859 996
	Shaft to Carburetor, w/SLOT, SY1	8	1	---- ---	---- ---	*1859 995
	Shaft to Bell Crank, SY1	8	1	---- ---	---- ---	2264 413
	Bell Crank to Trans., SY1.	8	1	---- ---	---- ---	2264 341
14-11-18	LINK, Bell Crank to Trans. Rod	6	1	2202 428		
	Shaft to Carburetor Rod	8	1	---- ---	2129 611	2129 611
	Shaft to Bell Crank	8	1	---- ---	---- ---	2264 411
14-11-20	BRACKET, Shaft, w/o Governor.	6	1	2120 799		
	w/Governor, SV1, SL1, Taxi	6	1	2264 060		
	SL1, SV1, High Performance	6	1	2264 060		
	Shaft Engine, SD3, SC1, SC2, SC3	8	1	---- ---	2264 800	2264 800
	Shaft Body, SD3, SC1, SC2, SC3	8	1	---- ---	2205 820	2205 820
	SY1.	8	1	---- ---	---- ---	1734 030

MyMopar.com

CODE	PART NAME AND DESCRIPTION	CYL.	PER CAR	VALIANT LANCER	PLYMOUTH DODGE	CHRYSLER IMPERIAL
14-11-0	**ACCELERATOR SHAFT - Cont'd**					
14-11-23	SCREW, Dash Bracket, except SD3		2	1947 301	6025 097	1947 301
	SD3	8	3	---- ---	1947 301	
14-11-25	PLATE, Shaft Bracket Stud Retainer, SY1	8	1	---- ---	---- ---	1734 028
14-11-28	LEVER, Shaft, SY1		1	2264 539	---- ---	1859 994
	Shaft Intermediate	6	1	2128 778		
14-11-30	INSULATOR, Shaft Sound, SD3		1	2128 347	1859 767	1859 767
14-11-33	BUSHING, Shaft Seal	6	1	2120 525		
	Shaft Engine Bracket, SD3, SC1, SC2, SC3	8	1	---- ---	2264 801	2264 801
	Shaft Lever	8	1	---- ---	---- ---	1859 768
14-11-34	RING, Shaft Retaining, SD3, SC1, SC2, SC3	8	1	---- ---	1936 051	1936 051
14-11-39	ROLLER, Shaft		1	---- ---	2268 346	
14-11-48	SEAL, Shaft Bracket, SY1	8	1	---- ---	---- ---	1827 773
14-13-0	**THROTTLE LINKAGE BALL STUD**					
14-13-1	BALL STUD, Accelerator Shaft Lever, SD3		1	2128 636	2128 636	2128 636
	Engine Bell Crank, SD3, SC1, SC2, SC3	8	1	---- ---	---- ---	2128 636
	Carburetor Lever	8	1	---- ---	2268 420	1858 936
	Accelerator Pedal Lever, SD3	8	1	---- ---	2128 636	2128 636
	Throttle Control Lever, SD3, SC1, SC2, SC3	8	1	---- ---	2128 636	2128 636
14-13-3	CLIP, Ball Stud Retainer		★	2121 571	2121 571	2121 571
14-13-5	RETAINER, Ball Stud, Threaded, except SD3		★	2268 367	2268 367	1945 197
	SD3		★	---- ---	1945 197	
14-14-0	**THROTTLE CONTROL BELL CRANK**					
14-14-1	BELL CRANK	6	1	2203 239		
	SD3, SC1, SC2, SC3	8	1	---- ---	2264 646	2264 646
	SY1	8	1	---- ---	---- ---	2264 415
14-14-4	PLATE, Bell Crank Tapping	6	1	2121 694		
14-14-5	CLIP, Bell Crank to Carburetor Rod	6	1	---- ---	1652 093	
	Bell Crank to Trans. Rod	6	1	---- ---	667 774	
	Accelerator Shaft to Bell Crank, except SY1	8	1	---- ---	---- ---	666 790
14-14-8	PIN, Bell Crank	6	1	2120 811		
14-14-12	BRACKET, Bell Crank Mounting	6	1	2203 240		
	w/Bell Crank	6	1	---- ---	2268 351	
14-14-13	NUT, Bell Crank Bracket	6	1	---- ---	2073 205	
14-14-20	STUD, Bell Crank, except SD3		1	---- ---	2264 702	
	SD3	8	1	---- ---	2264 480	2264 480
14-14-42	SCREW, Tapping Plate		3	2202 583	*2202 583	
14-14-56	BUSHING, Bell Crank, SD3		1	1859 768	1859 768	1859 768
14-14-57	INSULATOR, Bell Crank Sound, SD3		1	1859 767	1859 767	1859 767
14-15-0	**THROTTLE LEVER ROD**					
14-15-3	ROD, Interconnecting, SC2, w/ 2-4 Barrel Carburetor	8	1	---- ---	---- ---	1825 924

★ Indicates use as required. Numerals in parentheses ( ) refer to notes. Printed in U.S.A.
⊟ Indicates parts not listed in any previous parts book. Prices and specifications subject to change without notice.
March 8, 1963 Supersedes May 1, 1962. * Indicates change or addition.

MyMopar.com

CODE	PART NAME AND DESCRIPTION	CYL.	PER CAR	VALIANT LANCER	PLYMOUTH DODGE	CHRYSLER IMPERIAL
14-15-0	**THROTTLE LEVER ROD - Cont'd**					
14-15-6	SWIVEL, Rod, SC2	8	1	---- ---	---- ---	1822 124
14-15-10	ROD END, Front	8	1	---- ---	---- ---	1822 123
	Rear	8	1	---- ---	---- ---	1634 876
14-24-0	**FAST IDLE CABLE**					
14-24-1	CABLE, except SY1		1	917 248	917 248	917 248
14-24-4	COLLAR, Cable, SC1		1	2268 677	2268 677	2268 677
	SCREW		2	9417 273	9417 273	9417 273
14-24-5	PIN, Cable		1	2268 679	2268 679	
14-24-6	BRACKET, Cable Mounting		1	2205 934	2205 934	
14-24-9	SWIVEL, Cable, except SY1	8	1	---- ---	---- ---	639 173
14-24-11	CLIP, Cable Swivel, except SY1		1	---- ---	---- ---	639 174
14-25-0	**THROTTLE CONTROL**					
14-25-3	LEVER, Control Cable		1	---- ---	2264 744	
14-25-5	CLIP, Control Cable		1	---- ---	2264 696	
14-25-11	CABLE, Control, SP1, SD1	6	1	---- ---	2268 348	
	SP2, SD2	8	1	---- ---	2268 349	
14-25-12	PIN, Cable		1	---- ---	2264 706	
	CLIP		★	---- ---	6023 385	
14-25-13	RING, Cable Retainer		1	---- ---	1884 405	
14-26-0	**THROTTLE CONTROL CABLE MOUNTING BRACKET**					
14-26-2	CLIP, Mounting Bracket	8	1	---- ---	2264 741	
14-26-3	STUD, Bracket Mounting, SP2, SD2	8	1	---- ---	2264 702	
14-26-6	BRACKET, Control Cable	6	1	---- ---	2268 383	
	SP2, SD2	8	1	---- ---	2402 113	
	w/Alternator, SP2, SD2, High Performance	8	1	---- ---	*2268 422	
14-26-9	EXTENSION, Control Cable Bracket	8	1	---- ---	2402 110	
14-29-0	**CARBURETOR AIR CLEANER**					
14-29-2	AIR CLEANER, SV1, SL1, SP1, SD1, w/o Governor, Oil Bath	6	1	2128 805	2128 805	
	SV1, SL1, SP1, SD1, w/Governor, Oil Bath	6	1	1859 750	1859 750	
	w/o Governor, Dry Type, PACKAGE	6	1	*2279 891	*2279 891	
	SP2, SD2, w/2 Barrel Carburetor, Dry Type	8	1	---- ---	2264 609	
	SP2, SD2, w/2 Barrel Carburetor, Oil Bath	8	1	---- ---	2129 384	
	SP2, SD2, w/Power Package, w/4 Barrel Carburetor, Dry Type	8	1	---- ---	2264 606	
	SD3	8	1	---- ---	1859 527	
	SC1, SC2, w/2 Barrel Carburetor	8	1	---- ---	---- ---	1945 543
	SC2, w/Power Package, 1-4 Barrel Carburetor	8	1	---- ---	---- ---	1859 527
	SP2, SD2, High Performance, 1-4 Barrel Carburetor	8	1	---- ---	1859 527	
	SC2 High Performance, w/2-4 Barrel Carburetors	8	2	---- ---	---- ---	1852 568
	SC3, SY1, w/4 Barrel Carburetor	8	1	---- ---	---- ---	1945 543
14-29-3	GASKET, Oil Chamber, Upper, w/Oil Bath Cleaner	6	1	2128 879	2128 879	
	Lower	6	1	1821 144	1821 144	
	Air Cleaner Adapter, w/Oil Bath Cleaner	8	1	---- ---	2128 661	

★ Indicates use as required. Numerals in parentheses ( ) refer to notes. Printed in U.S.A.
⊟ Indicates parts not listed in any previous parts book. Prices and specifications subject to change without notice.
* Indicates change or addition.

March 8, 1963 Supersedes May 1, 1962.

MyMopar.com

14-29-0 CARBURETOR AIR CLEANER - Cont'd

CODE	PART NAME AND DESCRIPTION	CYL.	PER CAR	VALIANT LANCER	PLYMOUTH DODGE	CHRYSLER IMPERIAL
14-29-4	GASKET, Cover	8	1	---- ---	1945 561	
14-29-5	GASKET, w/o Governor	6	1	1947 797	1947 797	
	w/2 Barrel Carburetor	8	1	---- ---	1326 847	
	w/4 Barrel Carburetor	8	1	---- ---	1821 170	1821 170
14-29-6	FILTER	6	1	2206 376	2206 376	
	w/2 Barrel Carburetor	8	1	---- ---	1739 547	1946 923
	w/4 Barrel Carburetor		1	---- ---	1946 923	1946 923
	SC2, w/2-4 Barrel Carburetors	8	2	---- ---	---- ---	1852 569
14-29-7	COVER, Air Cleaner, w/Power Package	8	1	---- ---	2265 045	
14-29-10	ADAPTER, Cleaner to Carburetor, w/Oil Bath Cleaner	6	1	2129 000	2129 000	
14-29-12	BRACKET, Steady, w/Oil Bath Cleaner	6	1	2129 562	2129 562	
14-29-15	CLAMP, w/Dry Cleaner	6	1	2129 597	2264 116	
	w/Oil Bath Cleaner	6	1	2264 545	2264 545	
	SV1, SL1, High Performance, Dry Type		1	2264 116		
14-29-33	STUD, Cleaner to Carburetor	8	1	---- ---	1826 286	1826 286
14-29-44	SPACER, Steady Bracket	6	1	2129 856	2129 856	

14-30-0 CARBURETOR

	MODEL	USE WITH TRANSMISSION	CARBURETOR STAMPED	PART NUMBER
14-30-1	CARBURETOR ASSEMBLIES			
	SV1, SL1, w/170 cu. in. Eng., w/o Governor, w/o Closed Vent	STANDARD	3229S	2206 220
	SV1, SL1, w/170 cu. in. Eng., w/o Governor, w/o Closed Vent	AUTOMATIC	3230S	2206 221
	SV1, SL1, w/170 cu. in. Eng., w/o Governor, w/o Closed Vent, Domestic	ALL	3231S	2206 222
	SV1, SL1, w/170 cu. in. Eng., w/o Governor, w/Closed Vent, Domestic	ALL	3234S	2206 226
	SV1, SL1, Taxi, w/170 cu. in. Eng., w/o Governor, w/o Closed Vent, Export	STANDARD	3229S	2206 220
	SV1, SL1, Taxi, w/170 cu. in. Eng., w/o Governor, w/o Closed Vent, Export	AUTOMATIC	3230S	2206 221
	SV1 Taxi, w/170 cu. in. Eng., w/o Governor, w/o Closed Vent, Domestic	ALL	3286S	2206 229
	SV1 Taxi, w/170 cu. in. Eng., w/Governor, w/o Closed Vent, Domestic	ALL	3286S	2206 229
	SV1 Taxi, w/170 cu. in. Eng., w/Closed Vent	ALL	3287S	2206 230
	SV1, SL1, w/225 cu. in. Eng., w/o Vent, w/o Governor	STANDARD	3237S	2264 570
	SV1, SL1, w/225 cu. in. Eng., w/o Governor, w/o Closed Vent	AUTOMATIC	3238S	2264 571
	SV1, SL1, w/225 cu. in. Eng., w/o Governor, w/Closed Vent	ALL	3239S	2264 572
	SV1, SL1, w/170 cu. in. Eng., w/o Closed Vent	STANDARD	R2136A	2268 320

★ Indicates use as required. Numerals in parentheses ( ) refer to notes. Printed in U.S.A.
⊟ Indicates parts not listed in any previous parts book. Prices and specifications subject to change without notice.
March 8, 1963 Supersedes May 1, 1962. * Indicates change or addition.

MyMopar.com

14-30-0 CARBURETOR - Cont'd

	MODEL	USE WITH TRANSMISSION	CARBURETOR STAMPED	PART NUMBER
14-30-1	CARBURETOR ASSEMBLIES - Cont'd			
	SV1, SL1, w/170 cu. in. Eng., w/o Closed Vent	AUTOMATIC	R2416A	2268 321
	SV1, SL1, w/225 cu. in. Eng., w/o Closed Vent	STANDARD	R2303A	2268 322
	SV1, SL1, w/225 cu. in. Eng., w/o Closed Vent	AUTOMATIC	R2417A	2268 323
	SP1, SD1, w/o Closed Vent, w/225 cu. in. Eng.	STANDARD	R2418A	2268 324
	SP1, SD1, w/o Closed Vent, w/225 cu. in. Eng.	AUTOMATIC	R2419A	2268 325
	SP1, SD1, w/o Closed Vent, w/o Governor, w/225 cu. in. Eng.	STANDARD	3231S	2206 222
	SP1, SD1, w/225 cu. in. Eng., w/o Governor, w/o Closed Vent	AUTOMATIC	3232S	2206 223
	SP1, SD1, w/225 cu. in. Eng., w/o Governor, w/Closed Vent	ALL	3235S	2206 227
	SP1, SD1, Taxi, w/170 or 225 cu. in. Eng., w/o Governor, w/o Closed Vent	ALL	3233S	2206 224
	SP1, SD1, Taxi, w/170 or 225 cu. in. Eng., w/Closed Vent	ALL	3236S	2206 228
	SP2, SD2, w/318 cu. in. Eng., w/o Closed Vent, 2 Barrel, Detroit and Valley Park Built	STANDARD	3240S	2203 130
	SP2, SD2, w/318 cu. in. Eng., w/o Closed Vent, 2 Barrel	STANDARD	WW3-198	2203 131
	SP2, SD2, w/318 cu. in. Eng., w/o Closed Vent, 2 Barrel, Detroit and Valley Park Built	AUTOMATIC	3241S	2203 132
	SP2, SD2, w/318 cu. in. Eng., w/o Closed Vent, 2 Barrel, except Valley Park Built	AUTOMATIC	WW3-199	2203 133
	SP2, SD2, w/Power Package, w/318 cu. in. Eng., 4 Barrel, w/o Closed Vent	AUTOMATIC	3247S	2203 138
	SP2, SD2, w/318 cu. in. Eng., 2 Barrel, w/Closed Vent	ALL	WW3-200	2203 134
	SP2, SD2, w/Power Package, w/318 cu. in. Eng., 4 Barrel, w/Closed Vent	AUTOMATIC	3249S	2203 142
	SP2, SD2, High Performance, w/361 cu. in. Eng., w/o Closed Vent, 4 Barrel	STANDARD	3252S	2205 760
	SP2, SD2, High Performance, w/361 cu. in. Eng., w/o Closed Vent, 4 Barrel	AUTOMATIC	3253S	2205 761
	SP2, SD2, High Performance, w/361 cu. in. Eng., w/Closed Vent, 4 Barrel	ALL	3257S	2205 768
	SD3, w/361 cu. in. Eng., w/o Closed Vent, 2 Barrel, PACKAGE	ALL	WW3-201	*2299 171
	SD3, w/361 cu. in. Eng., w/Closed Vent, 2 Barrel, PACKAGE	ALL	3245S	*2299 173
	SP2, SD2, Police Car, w/383 cu. in Eng., w/o Closed Vent, 4 Barrel	ALL	3437S	2402 211
	SP2, SD2, Police Car, w/383 cu. in. Eng., w/Closed Vent, 4 Barrel	ALL	3438S	2402 212
	SP2, SD2, w/413 cu. in. Eng., 2-4 Barrel Carburetors	All	3447S	*2402 359

MyMopar.com

14-30-0 CARBURETOR - Cont'd

	MODEL	USE WITH TRANSMISSION	CARBURETOR STAMPED	PART NUMBER
14-30-1	CARBURETOR ASSEMBLIES - Cont'd			
	SC1, w/361 cu. in. Eng., w/o Closed Vent, 2 Barrel, PACKAGE	ALL	WW3-201	*2299 171
	SC1, w/361 cu. in. Eng., w/Closed Vent, 2 Barrel	ALL	3245S	2205 765
	SC1 Police Car, w/383 cu. in. Eng., w/o Closed Vent, 4 Barrel	ALL	3375S	2268 768
	SC1, w/383 cu. in. Eng., w/Closed Vent, 4 Barrel	ALL	3374S	2268 767
	SC2, w/383 cu. in. Eng., w/Closed Vent, 2 Barrel	AUTOMATIC	3245S	2205 765
	SC2, w/383 cu. in. Eng., w/o Closed Vent, 2 Barrel	AUTOMATIC	3244S	2264 573
	SC3, SY1, w/413 cu. in. Eng., w/o Closed Vent, 4 Barrel	AUTOMATIC	3251S	2205 758
	SC3, SY1, w/413 cu. in. Eng., w/Closed Vent, 4 Barrel	AUTOMATIC	3256S	2205 766
	SC2, w/Power Package, w/413 cu. in. Eng., 4 Barrel, w/o Closed Vent	AUTOMATIC	3251S	*2205 758
	SC2, w/Power Package, w/413 cu. in. Eng., 4 Barrel, w/Closed Vent	AUTOMATIC	3256S	*2205 766
	SC2, w/413 cu. in. Eng., w/ or w/o Closed Vent, 4 Barrel, Front	ALL	3258S	2206 468
	SC2, w/413 cu. in. Eng., w/ or w/o Closed Vent, 4 Barrel, Rear	ALL	3259S	2206 469

NOTE: For further Carburetor Service Parts see the following Charts.

PART TYPE CODE	SERVICE PARTS	CARBURETOR ASSEMBLIES						
		2203 130 3240S	2203 131 WW3-198	2203 132 3241S	2203 133 WW3-199	2203 134 WW3-200	2203 138 3247S	2203 142 3249S
14-30-2	GASKET, Flange	1634 701	1634 701	1634 701	1634 701	1634 701	2121 953	2121 953
14-30-4	REPAIR PACKAGE	*2299 176	2299 082	2240 496	2299 086	2299 082	2275 251	2240 465
	ZIP KIT	2299 076	2299 083	2299 076	2299 083	2299 083	2299 077	2299 077
14-30-7	GASKET PACKAGE	1826 511	2275 255	1826 511	2275 255	2275 255	2196 211	2196 211
14-30-8	NEEDLE, w/SEAT, Float	2240 410	2240 436	2240 410	2240 436	2240 436	2196 207	2196 207
14-30-27	STRAINER, Fuel Inlet	---- ---	---- ---	---- ---	---- ---	---- ---	1826 864	1826 864
14-30-28	NUT, Fuel Inlet Strainer	---- ---	---- ---	---- ---	---- ---	---- ---	1826 863	1826 863
14-35-1	JET, Main Metering	1618 220	1553 087	1618 220	1553 086	1553 087	---- ---	---- ---
	Primary	---- ---	---- ---	---- ---	---- ---	---- ---	2240 464	2240 464
	Secondary	---- ---	---- ---	---- ---	---- ---	---- ---	1631 356	1631 356
14-35-6	JET, Power By-Pass	---- ---	2240 454	---- ---	2299 085	2240 454	---- ---	---- ---
14-35-8	JET, Main Discharge	---- ---	1631 353	---- ---	1631 353	1631 353	---- ---	---- ---
14-39-45	CHOKE	1737 780	1852 020	1737 780	1852 020	1852 020	2121 955	2121 955
14-41-3	PLUNGER, w/ROD, Pump	2084 163	2084 733	2084 163	2084 733	2084 733	1826 369	1826 369
14-43-5	ROD, Step-Up	2299 117	---- ---	2299 120	---- ---	---- ---	2240 466	2240 473

★ Indicates use as required. Numerals in parentheses ( ) refer to notes. Printed in U.S.A.
⊟ Indicates parts not listed in any previous parts book. Prices and specifications subject to change without notice.
March 8, 1963 Supersedes May 1, 1962. * Indicates change or addition.

MyMopar.com

14-30-0 CARBURETOR - Cont'd

CARBURETOR ASSEMBLIES - Cont'd

NOTE: For further Carburetor Service Parts see the following Charts.

PART TYPE CODE	SERVICE PARTS	CARBURETOR ASSEMBLIES						
		*2299 171 WW3-201	2205 758 3251S	2205 760 3252S	2205 761 3253S	2205 765 3245S	2205 766 3256S	2205 768 3257S
14-30-2	GASKET, Flange	2264 193	2121 954	2121 952	2121 952	2264 193	2121 953	2121 952
14-30-4	REPAIR PACKAGE	2299 091	2240 467	2275 253	2240 498	2240 477	*2299 186	2240 475
	ZIP KIT	2299 093	2299 080	2299 078	2299 078	2299 074	2299 080	2299 078
14-30-7	GASKET PACKAGE	2299 092	2196 212	2196 209	2196 209	2240 478	2196 212	2196 209
14-30-8	NEEDLE, w/SEAT, Float	2240 436	2196 207	2196 207	2196 207	2240 410	2196 207	2196 207
14-30-27	STRAINER, Fuel Inlet	---- ---	1826 864	1826 864	1826 864	---- ---	1826 864	1826 864
14-30-28	NUT, Inlet Strainer	---- ---	1826 863	1826 863	1826 863	---- ---	1826 863	1826 863
14-35-1	JET, Main Metering	2299 121	---- ---	---- ---	---- ---	2240 437	---- ---	---- ---
	Primary	---- ---	2240 464	2240 464	2240 464	---- ---	2240 464	2240 464
	Secondary	---- ---	1676 770	1676 770	1631 356	---- ---	1676 770	1676 770
14-35-6	JET, Power By-Pass	2299 089	---- ---	---- ---	---- ---	---- ---	---- ---	---- ---
14-39-45	CHOKE	1947 842	2264 580	2264 580	2264 580	1858 523	2264 580	2264 580
14-41-3	PLUNGER, w/ROD, Pump	2084 730	1826 369	1826 369	1826 369	1826 607	1826 369	1826 369
14-43-5	ROD, Step-Up	---- ---	2240 466	---- ---	2240 463	2291 115	2240 466	2240 474

NOTE: For further Carburetor Service Parts see the following Charts.

PART TYPE CODE	SERVICE PARTS	CARBURETOR ASSEMBLIES						
		2206 220 3229S	2206 221 3230S	2206 222 3231S	2206 223 3232S	2206 224 3233S	2206 226 3234S	2206 227 3235S
14-30-2	GASKET, Flange	2205 582	2205 582	2205 582	2205 582	2205 582	2205 582	2205 582
	w/Governor	---- ---	---- ---	2205 858	2205 858	2205 858	---- ---	2205 858
14-30-4	REPAIR PACKAGE	2299 003	2299 007	2299 007	2299 007	2196 246	2299 017	2299 021
	ZIP KIT	2299 069	2299 070	2299 070	2299 070	2299 069	2299 073	2299 072
14-30-7	GASKET PACKAGE	2196 221	2196 222	2196 222	2196 222	2196 221	2240 472	2240 470
14-30-8	NEEDLE, w/SEAT, Float	2240 401	2240 401	2240 401	2240 401	2240 401	2240 401	2240 401
14-35-1	JET, Main Metering	2299 109	2299 005	2299 005	2299 005	1618 157	2299 109	2299 005
14-39-45	CHOKE	2264 579	2264 579	2129 561	2264 579	*2268 504	2264 579	2264 579
14-41-3	PLUNGER, w/ROD, Pump	2196 214	2196 214	2196 214	2196 214	2196 214	2196 214	2196 214
14-43-5	ROD, Step-Up	2299 110	2299 112	2299 111	2299 112	1631 502	2299 108	2299 113

NOTE: For further Carburetor Service Parts see the following Charts.

PART TYPE CODE	SERVICE PARTS	CARBURETOR ASSEMBLIES						
		2206 228 3236S	2206 229 3286S	2206 230 3287S	2206 468 3258S	2206 469 3259S	2264 570 3237S	2264 571 3238S
14-30-2	GASKET, Flange	2205 582	2205 582	2205 582	1852 586	1852 586	2205 582	2205 582
	w/Governor	2205 858	2205 858	2205 858	---- ---	---- ---	---- ---	---- ---

★ Indicates use as required. Numerals in parentheses ( ) refer to notes. Printed in U.S.A.
⊟ Indicates parts not listed in any previous parts book. Prices and specifications subject to change without notice.
* Indicates change or addition. March 8, 1963 Supersedes May 1, 1962.

MyMopar.com

14-30-0 CARBURETOR - Cont'd

CARBURETOR ASSEMBLIES - Cont'd

NOTE: For Further Carburetor Service Parts see the following Charts.

PART TYPE CODE	SERVICE PARTS	CARBURETOR ASSEMBLIES 2206 228 3236S	2206 229 3286S	2206 230 3287S	2206 468 3258S	2206 469 3259S	2264 570 3237S	2264 571 3238S
14-30-4	REPAIR PACKAGE	2240 471	2196 246	2240 471	2299 057	2299 060	2299 007	2299 007
	ZIP KIT	2299 073	2299 069	2299 073	2299 079	2299 079	2299 070	2299 070
14-30-7	GASKET PACKAGE	2240 472	2196 221	2240 472	1826 561	1826 561	2196 222	2196 222
14-30-8	NEEDLE, w/SEAT, Float	2240 401	2240 401	2240 401	2196 207	2196 207	2240 401	2240 401
14-30-27	STRAINER, Fuel Inlet	---- ---	---- ---	---- ---	1826 864	1826 864	---- ---	---- ---
14-30-28	NUT, Inlet Strainer	---- ---	---- ---	---- ---	1826 346	1826 863	---- ---	---- ---
14-33-5	SPACER	---- ---	---- ---	---- ---	1852 278	1852 278	---- ---	---- ---
14-35-1	JET, Main Metering	1618 157	1618 157	1618 157	---- ---	---- ---	2299 005	2299 005
	Primary	---- ---	---- ---	---- ---	1400 857	1400 857	---- ---	---- ---
	Secondary	---- ---	---- ---	---- ---	1676 692	1631 629	---- ---	---- ---
14-39-45	CHOKE	2129 561	2264 579	2264 579	---- ---	---- ---	2264 579	2264 579
14-41-3	PLUNGER, w/ROD, Pump	2196 214	2196 214	2196 214	1826 846	1826 846	2196 214	2196 214
14-43-5	ROD, Step-Up	1631 502	1631 502	1631 502	1826 860	2299 059	2299 111	2299 112

NOTE: For further Carburetor Service Parts see the following Charts.

PART TYPE CODE	SERVICE PARTS	CARBURETOR ASSEMBLIES 2264 572 3239S	2264 573 3244S	2268 320 R2136A	2268 321 R2416A	2268 322 R2303A	2268 323 R2417A	2268 325 R2419A
14-30-2	GASKET, Flange	2205 582	2264 193	2205 582	2205 582	2205 582	2205 582	2205 582
14-30-4	REPAIR PACKAGE	2299 021	2240 477	2299 036	2299 036	2299 036	2299 036	2299 036
	ZIP KIT	2299 072	2299 074	---- ---	---- ---	---- ---	---- ---	---- ---
14-30-7	GASKET PACKAGE	2240 470	2240 478	2299 037	2299 037	2299 037	2299 037	2299 037
14-30-8	NEEDLE, w/SEAT, Float	2240 401	2240 410	2299 042	2299 042	2299 042	2299 042	2299 042
14-35-1	JET, Main Metering	2299 005	2240 437	2299 041	2299 041	2299 041	2299 041	2299 041
14-35-33	STEM, Economizer	---- ---	---- ---	2299 040	2299 040	2299 040	2299 040	2299 040
14-35-39	WELL, Main	---- ---	---- ---	2299 039	2299 039	2299 039	2299 039	2299 039
14-39-45	CHOKE	2264 579	1858 523	2268 327	2268 327	2268 327	2268 327	2268 327
14-41-3	PLUNGER, w/ROD, Pump	2196 214	1826 607	2299 038	2299 038	2299 038	2299 038	2299 038
14-43-5	ROD, Step-Up	2299 113	2299 116	---- ---	---- ---	---- ---	---- ---	---- ---

NOTE: For further Carburetor Service Parts see the following Charts.

PART TYPE CODE	SERVICE PARTS	CARBURETOR ASSEMBLIES 2268 767 3374S	2268 768 3375S	2402 211 3437S	2402 212 3438S	*2268 324 R2418A	*2402 359 3447S	---- --- ---- ---
14-30-2	GASET, Flange	2121 952	2121 952	2121 952	2121 952	*2205 582	*1947 810	---- ---

★ Indicates use as required. Numerals in parentheses ( ) refer to notes. Printed in U.S.A.
⊟ Indicates parts not listed in any previous parts book. Prices and specifications subject to change without notice.
March 8, 1963 Supersedes May 1, 1962. * Indicates change or addition.

MyMopar.com

14-30-0 CARBURETOR - Cont'd

CARBURETOR ASSEMBLIES - Cont'd

NOTE: For further Carburetor Service Parts see the following Charts.

PART TYPE CODE	SERVICE PARTS	CARBURETOR ASSEMBLIES 2268 767 3374S	2268 768 3375S	2402 211 3437S	2402 212 3438S	*2268 324 R2418A	2402 359 3447S	---- --- ---- ---
14-30-4	REPAIR PACKAGE	*2240 480	*2240 480	*2240 480	*2240 480	*2299 036	*2299 181	---- ---
	ZIP KIT	*2299 080	*2299 080	2299 080	2299 080	---- ---	*2299 184	---- ---
14-30-7	GASKET PACKAGE	*2196 212	*2196 212	*2196 212	*2196 212	*2299 037	*2299 182	---- ---
14-30-8	NEEDLE, w/SEAT, Float	2196 207	2196 207	2196 207	2196 207	*2299 042	*2196 207	---- ---
14-30-27	STRAINER, Fuel Inlet	1826 864	1826 864	1826 864	1826 864	---- ---	*1826 864	---- ---
14-30-28	NUT, Inlet Strainer	1826 863	1826 863	1826 863	1826 863	---- ---	*1826 863	---- ---
14-35-1	JET, Main Metering Primary	2240 464	2240 464	2240 464	2240 464	*2299 041	*1826 208	---- ---
	Secondary	2084 166	2084 166	2084 166	2084 166	---- ---	---- ---	---- ---
14-35-33	STEM, Economizer	---- ---	---- ---	---- ---	---- ---	*2299 040	---- ---	---- ---
14-35-39	WELL, Main	---- ---	---- ---	---- ---	---- ---	*2299 039	---- ---	---- ---
14-39-45	CHOKE	*2402 201	*2402 201	2264 580	2264 580	*2268 327	Manual	---- ---
14-41-3	PLUNGER, w/ROD, Pump	1826 369	1826 369	1826 369	1826 369	*2299 038	*1826 369	---- ---
14-43-5	ROD, Step-Up	2240 479	2240 479	2240 479	2240 479	---- ---	*1826 861	---- ---

CODE	PART NAME AND DESCRIPTION	CYL.	PER CAR	VALIANT LANCER	PLYMOUTH DODGE	CHRYSLER IMPERIAL
14-65-0	**AUTOMATIC CHOKE TO CARBURETOR ROD CLIP**					
14-65-4	CLIP, Stamped D-L		★	---- ---	1639 182	1639 182
	Stamped D-R		★	1738 635	1738 635	1738 635
14-67-0	**FUEL FILTER**					
14-67-1	FILTER		1	2084 258	2084 258	2084 258
14-67-2	HOSE, Filter to Carburetor		★	1739 230	1739 230	1739 230
	CLAMP		★	274 461	274 461	274 461

14-68-0 GOVERNOR

NOTE: To insure against delay in shipment of Governor DO NOT send orders to Chrysler Corporation. Enter orders direct to the following: Handy Division of King-Seeley Corporation, Ann Arbor, Michigan, U.S.A.

14-68-3	GASKET, Governor	6	1	2205 858	2205 858	
14-68-5	CONNECTOR, Tube	6	1	2206 146	2206 146	
14-68-8	SPACER, Governor to Carburetor, w/o Closed Vent	6	1	1615 836	1615 836	
	w/Closed Vent	6	1	2205 857	2205 857	
14-72-0	**FUEL TANK GAUGE**					
14-72-1	GAUGE	6	1	2209 296		
	Except Sub.		1	---- ---	2275 589	2240 547
	Sub.		1	---- ---	2275 588	2240 548
	Except Sub., SD3	8	1	---- ---	2240 547	
	Sub., SD3	8	1	---- ---	2240 548	

★ Indicates use as required. Numerals in parentheses ( ) refer to notes. Printed in U.S.A.
⊟ Indicates parts not listed in any previous parts book. Prices and specifications subject to change without notice.
* Indicates change or addition.

March 8, 1963 Supersedes May 1, 1962.

MyMopar.com

CODE	PART NAME AND DESCRIPTION	CYL.	PER CAR	VALIANT LANCER	PLYMOUTH DODGE	CHRYSLER IMPERIAL
14-72-0	**FUEL TANK GAUGE - Cont'd**					
14-72-5	CLIP, Gauge Grounding		1	2258 862	2258 412	2258 412
14-72-9	SEAL		1	1948 757	1948 757	1948 757
14-72-33	CABLE, w/TERMINAL and INSULATOR		1	2257 444	2257 444	2257 444
14-72-47	RETAINER, Gauge		1	1730 095	1730 095	1730 095
14-73-0	**FUEL PUMP**					
14-73-1	PUMP PACKAGE	6	1	2084 859	2279 914	
	SP2, SD2, w/o Air Cond.	8	1	---- ---	1843 287	
	SP2, SD2, w/Air Cond.	8	1	---- ---	2279 901	
	SP2, SD2, High Performance, SC1, SC2	8	1	---- ---	2275 573	2275 573
	SD3	8	1	---- ---	2275 573	
	SC2 High Performance, SC3, SY1	8	1	---- ---	---- ---	*2275 573
	SCREW		2	*6023 548	*6023 548	*6023 548
14-74-0	**FUEL PUMP MOUNTING**					
14-74-1	GASKET		1	1400 185	1400 185	1400 185
14-77-0	**FUEL PUMP PUSH ROD**					
14-77-17	ROD	8	1	---- ---	1737 745	1737 745
14-86-0	**FUEL TANK**					
14-86-1	TANK	6	1	2074 056		
	Except Sub.		1	---- ---	*2409 323	
	Sub.		1	---- ---	2074 005	1944 200
	w/Filler TUBE, SD3 except Sub.	8	1	---- ---	2123 642	
	Sub., SD3	8	1	---- ---	1944 200	
	w/Filler TUBE, except SY1	8	1	---- ---	---- ---	2123 642
	SY1	8	1	---- ---	---- ---	2123 623
14-86-13	PLUG, Drain		1	---- ---	1739 194	1739 194
14-86-20	SPACER, Fuel Tank Wheelhouse, Sub., SD3	8	1	---- ---	1960 602	1960 602
14-86-24	SEAL, Drain Plug		1	---- ---	1739 196	1739 196
14-86-35	CAP, Filler Tube		1	2074 054		
	Except Sub.		1	---- ---	2073 998	1948 749
	Except Sub., SD3	8	1	---- ---	1948 749	
	Sub.		1	---- ---	2074 054	
	CAP PACKAGE, Sub., SD3	8	1	---- ---	2240 235	2240 235
14-86-40	TUBE, Filler, except Sub.	6	1	2208 480	2074 016	
	Sub., except SD3		1	2203 456	2074 017	1944 206
	Sub., SD3	8	1	---- ---	1944 206	
	SY1	8	1	---- ---	---- ---	1948 734
14-86-42	GASKET, Filler Tube Cam	6	1	2073 931		
14-86-50	TUBE, Fuel Vent, except Sub.	6	1	2208 467		
14-86-55	GROMMET, Filler Tube, SY1	8	1	---- ---	---- ---	1948 741
14-86-57	HOSE, Vent Tube, except Sub., SD3		1	1828 456	1828 456	1828 456
	Sub.	6	1	2074 063		
	SY1	8	1	---- ---	---- ---	1826 456
14-86-83	"O" RING, Filler Tube	6	1	2073 938		
	Except Sub.		1	---- ---	1730 087	1730 087
	Sub.		1	---- ---	2073 938	
14-86-85	FILTER, Inside of Tank		1	1670 694	1670 694	1670 694

★ Indicates use as required. Numerals in parentheses ( ) refer to notes. Printed in U.S.A.
⊟ Indicates parts not listed in any previous parts book. Prices and specifications subject to change without notice.

MyMopar.com

CODE	PART NAME AND DESCRIPTION	CYL.	PER CAR	VALIANT LANCER	PLYMOUTH DODGE	CHRYSLER IMPERIAL
14-87-0	**FUEL TANK STONE DEFLECTOR**					
14-87-2	DEFLECTOR, Sub. except SD3		1	---- ---	*2251 725	
	Sub., SD3			---- ---	*1961 353	*1961 353
14-88-0	**FUEL TANK SUPPORT**					
14-88-8	BRACKET, Support Strap, Sub.		1	---- ---	2251 722	
	Support Strap, Inner, Sub., SD3	8	1	---- ---	*1878 264	*1878 264
	Support Strap, Outer, Sub., SD3	8	1	---- ---	*1878 263	*1878 263
14-88-21	STRAP	6	1	2203 449		
	Except Sub.		1	---- ---	2074 036	
	Except Sub., SD3, SC1, SC2, SC3	8	2	---- ---	*1944 194	*1944 194
	Sub., SD3, SC1, SC3	8	1	---- ---	*1944 203	*1944 203
	SY1	8	1	---- ---	---- ---	1944 177
	Sub.		1	---- ---	2074 015	
14-88-27	STUD, Strap	6	1	1671 610		
	Except Sub.		1	---- ---	2074 032	
	Except SY1	8	1	---- ---	---- ---	1944 171
	SY1	8	1	---- ---	---- ---	1671 610
	Sub.		1	---- ---	1671 610	
14-88-36	REINFORCEMENT, Rear Floor Pan Fuel Tank, SD3, SC1, SC2, SC3, except Sub.	8	1	---- ---	*1878 169	*1878 169
14-89-0	**FUEL LINE TUBE**					
14-89-2	TUBING, 25 Ft. Roll, 5/16" O.D.		★	*1843 253	*1843 253	*1843 253
14-89-57	HOSE, Tube		★	1739 230	1739 230	1739 230
	CLAMP		★	274 461	274 461	274 461
14-90-0	**FUEL LINE TUBE CLIP**					
14-90-1	CLIP, except SY1		★	2123 341	2123 341	2123 341
	SY1	8	★	---- ---	---- ---	1119 423

NOTES

★ Indicates use as required. Numerals in parentheses ( ) refer to notes. Printed in U.S.A.
⊟ Indicates parts not listed in any previous parts book. Prices and specifications subject to change without notice.
* Indicates change or addition.

May 1, 1962 Supersedes Nov. 30, 1961.

MyMopar.com

CODE	PART NAME AND DESCRIPTION	CYL.	PER CAR	VALIANT LANCER	PLYMOUTH DODGE	CHRYSLER IMPERIAL

NOTES

MyMopar.com

GROUP 15 - HOOD

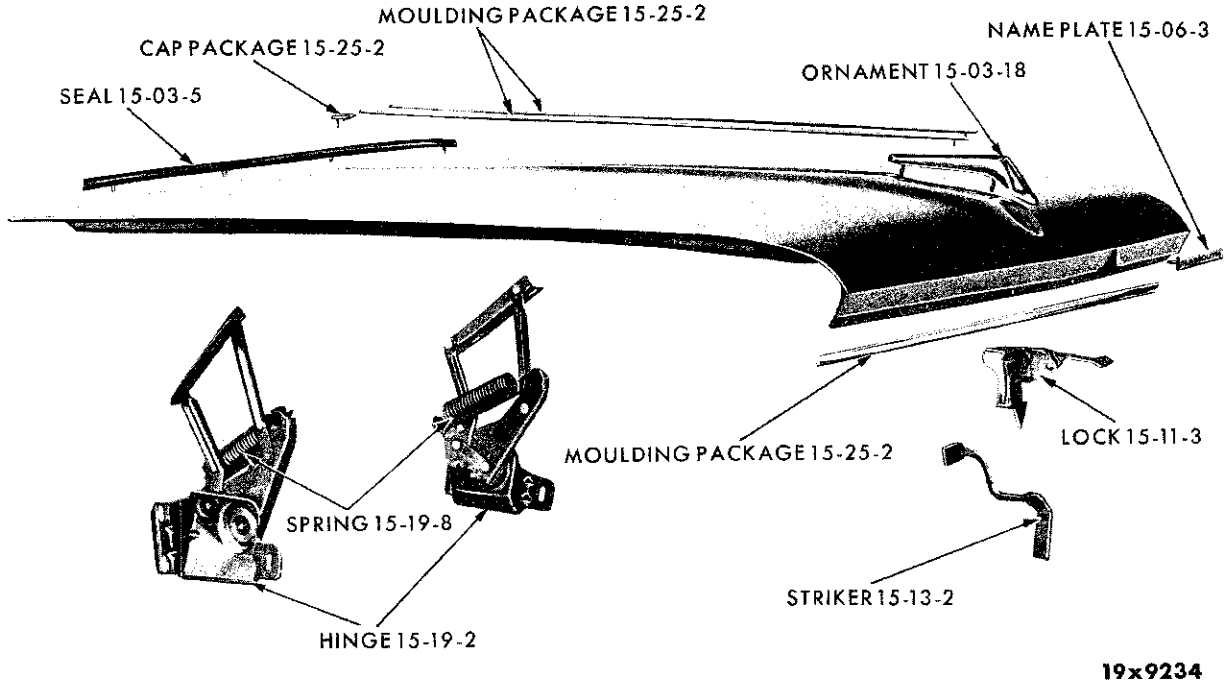

HOOD - PLYMOUTH SP1-2

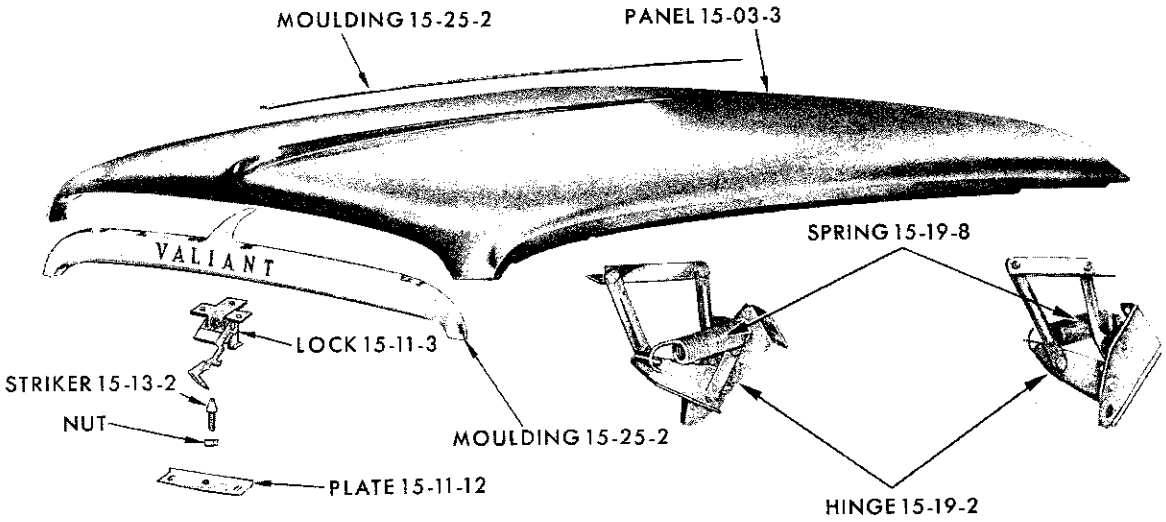

PARTS INDICATED BY NAME ONLY - ORDER BY DESCRIPTION

19x8740A

HOOD - VALIANT SV1

MyMopar.com

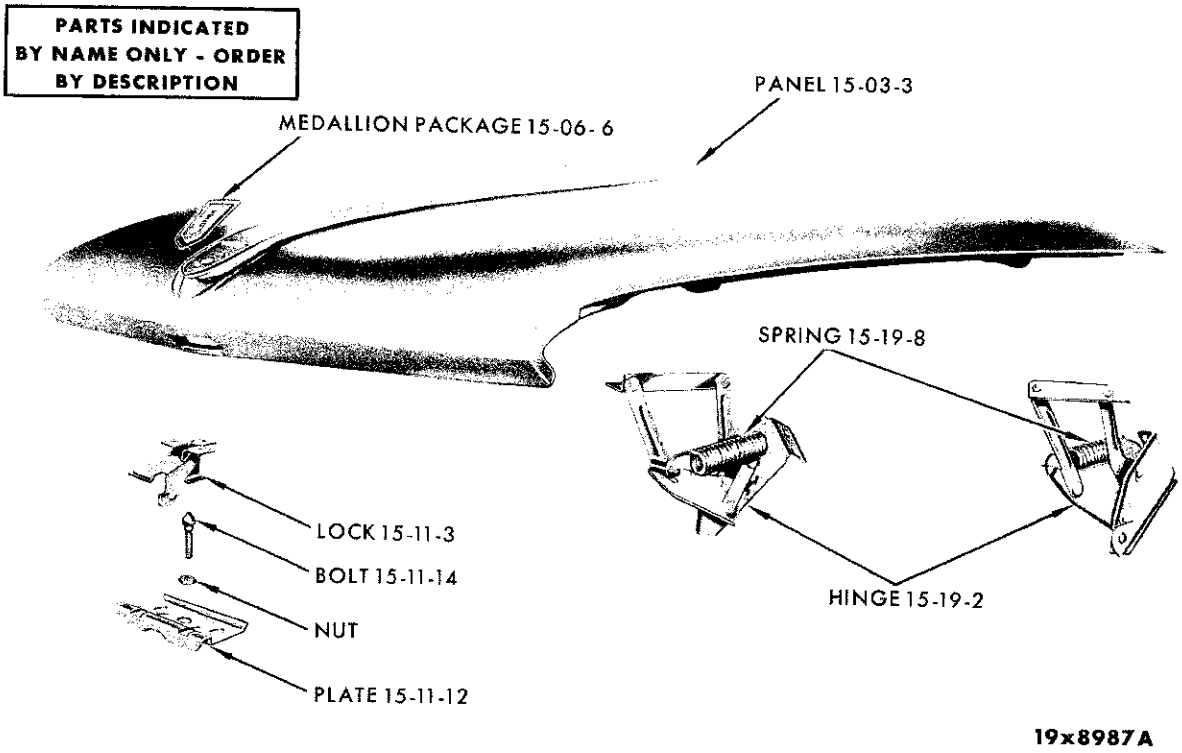

HOOD - LANCER SL1

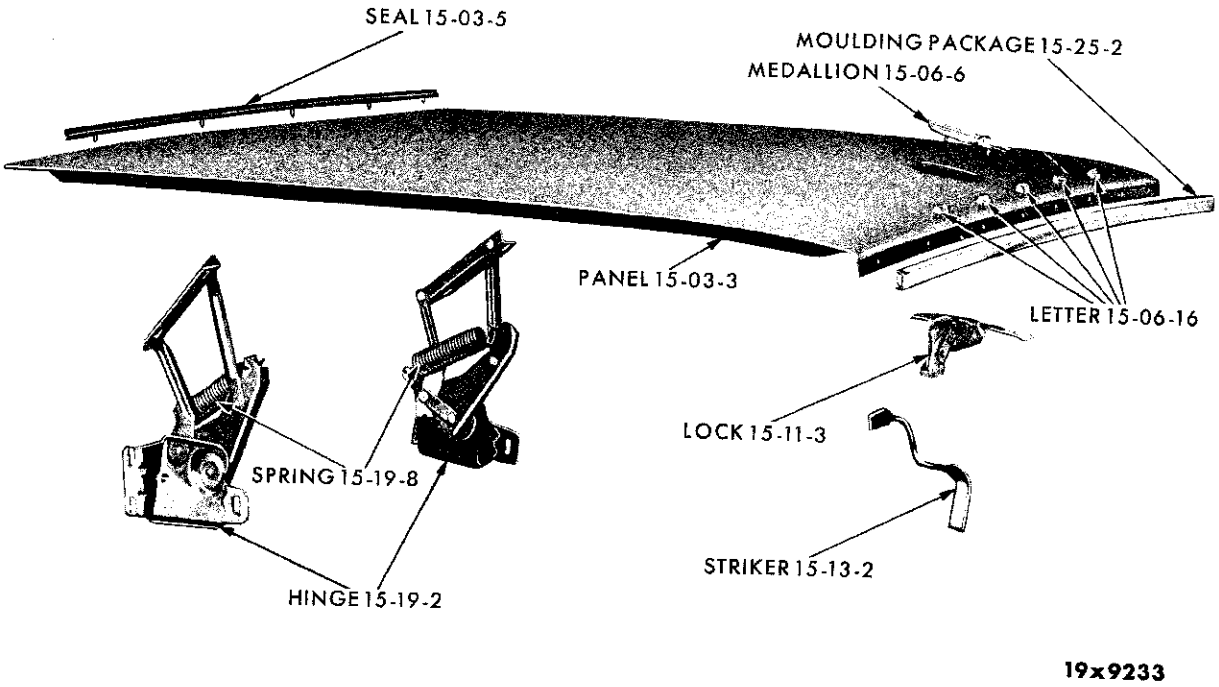

HOOD - DODGE SD1-2

MyMopar.com

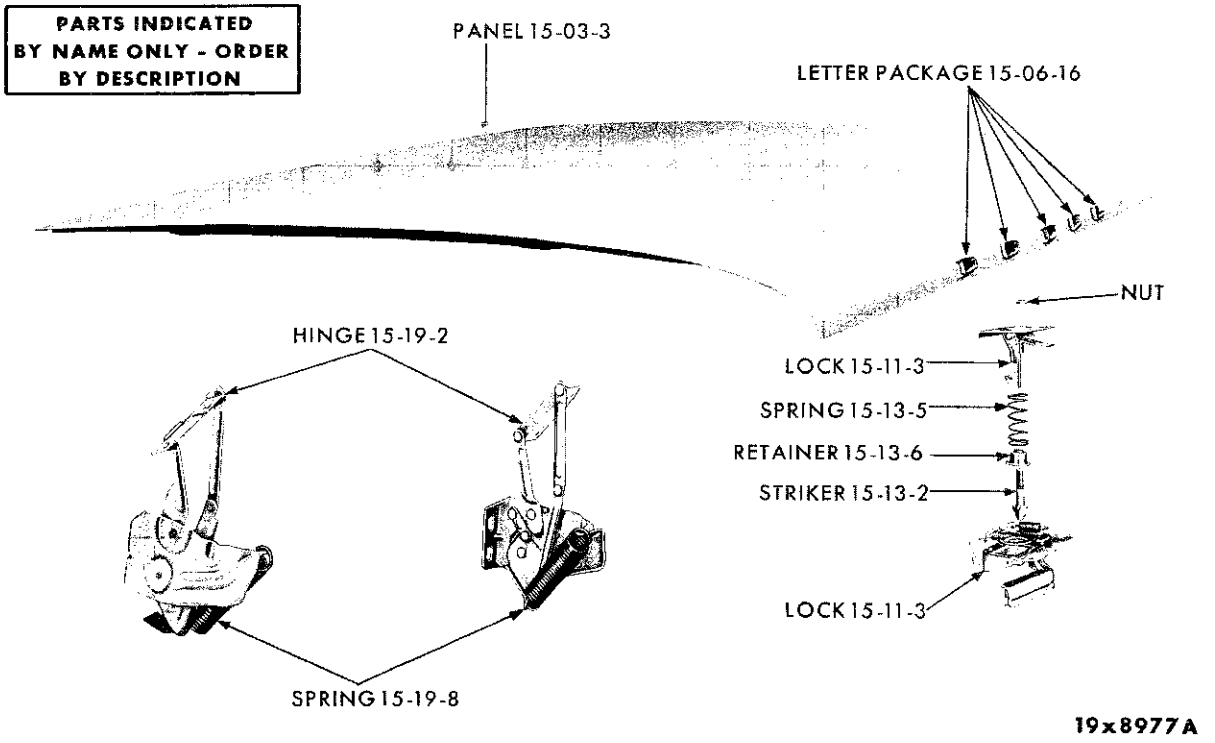

HOOD - DODGE SD3

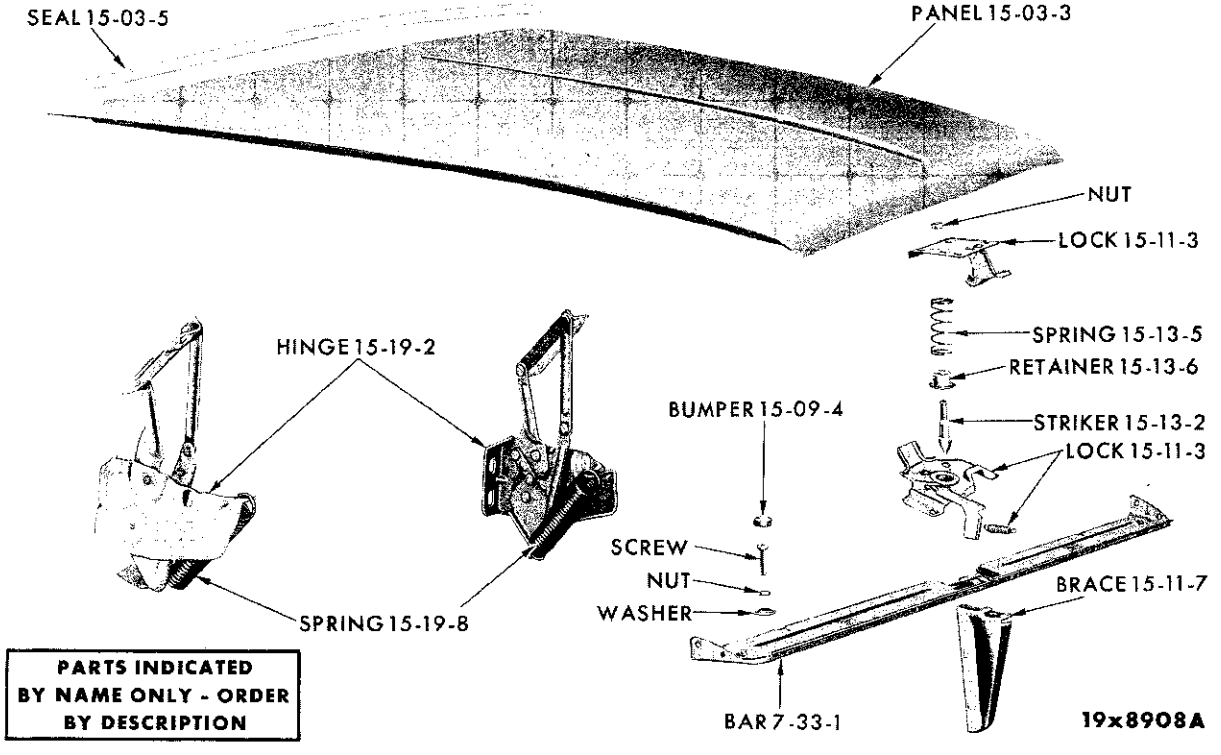

HOOD - CHRYSLER SC1-2-3

MyMopar.com

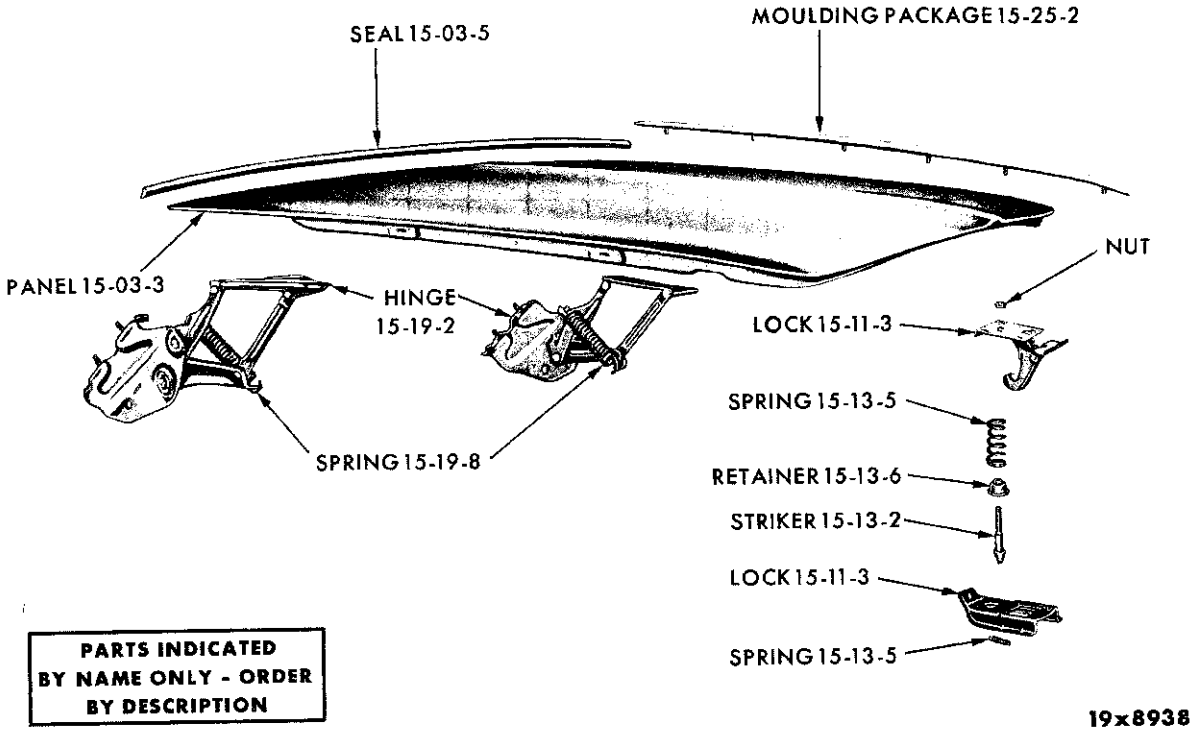

HOOD - IMPERIAL SY1

NOTES

MyMopar.com

CODE	PART NAME AND DESCRIPTION	CYL.	PER CAR	VALIANT LANCER	PLYMOUTH DODGE	CHRYSLER IMPERIAL
15-03-0	**HOOD TOP PANEL**					
15-03-3	PANEL, SV1	6	1	2253 159		
	SL1	6	1	2195 521		
	SP1, SP2		1	---- ---	2099 002	
	SD1, SD2		1	---- ---	2099 058	
	SD3	8	1	---- ---	2417 182	
	SC1, SC2	8	1	---- ---	---- ---	2253 241
	SC3	8	1	---- ---	---- ---	2253 249
	SY1	8	1	---- ---	---- ---	1904 054
15-03-5	SEAL, Hood to Cowl, except SY1		1	2082 965	2217 348	2165 551
	Hood to Yoke		★	---- ---	1242 974	1242 974
	CLIP, to Inner Panel		★	---- ---	6010 094	
	CLIP, to Yoke	8	★	---- ---	---- ---	6000 070
15-03-11	REINFORCEMENT, Hood Inner Panel, except SY1	8	1	---- ---	---- ---	2099 926
15-03-18	ORNAMENT, w/MEDALLION, Hood Top					
	NOTE: See Exterior Moulding Illustrations in Front of Group 23 Body.					
15-03-42	PLATE, Ornament, Rear, SP1, SP2		1	---- ---	⊟2417 240	
15-03-60	SILENCER	6	1	2259 105		
	SP1, SP2		1	---- ---	2276 870	
	SD1, SD2		1	---- ---	2241 877	
	SD3	8	1	---- ---	*2241 165	
	SC1, SC2, SC3	8	1	---- ---	---- ---	*2241 167
	SY1	8	1	---- ---	---- ---	*2276 955
	CLIP	8	★	6000 932	6000 932	6000 932

15-06-0 HOOD NAME PLATE, MEDALLIONS AND LETTERS

NOTE: See Exterior Moulding Illustrations in Front of Group 23 Body.

15-09-0	**HOOD BUMPER**					
15-09-4	BUMPER, Fender to Hood	6	2	2082 688		
	Fender to Hood (also specify 2-6023 541 Screw)		2	2276 804	2276 804	
	Fender to Hood, w/o Stud, Front		2	---- ---	2276 603	
	Fender to Hood, w/o Stud, Rear		2	---- ---	2276 749	
	Fender to Hood, w/o Stud, SD3	8	4	---- ---	1904 825	
	Radiator Cross Bar to Hood, SD3	8	2	---- ---	6010 155	
	Fender to Hood, except SY1	8	4	---- ---	---- ---	2276 865
	Fender to Hood, Front, SY1	8	4	---- ---	---- ---	1904 197
	Fender to Hood, Side, SY1	8	6	---- ---	---- ---	1904 198
	Hood to Radiator Cross Bar, SD1, SD2, SD3		2	---- ---	6010 155	6010 155
15-09-22	WASHER, Radiator Yoke to Hood Bumper	6	2	1903 513	6022 189	
	Radiator Cross Bar to Hood	8	2	---- ---	6022 188	6022 188
15-11-0	**HOOD LOCK**					
15-11-3	LOCK, Upper Half, SV1	6	1	2242 181		
	Upper Half, SL1	6	1	2195 498		
	Upper Half, SP1, SP2		1	---- ---	2099 402	
	Upper Half, SD1, SD2		1	---- ---	2099 513	
	Upper Lock, except SY1	8	1	---- ---	---- ---	1904 643
	Upper Lock, SY1	8	1	---- ---	---- ---	1904 143
	Upper Half, SD3	8	1	---- ---	1904 691	
	Lower Half, SD3	8	1	---- ---	1904 598	
	Lower Lock, except SY1	8	1	---- ---	---- ---	1904 415
	Lower Lock, SY1	8	1	---- ---	---- ---	1904 175
	NUT, Upper Lock	8	4	---- ---	---- ---	6000 123

★ Indicates use as required. Numerals in parentheses ( ) refer to notes. Printed in U.S.A.
⊟ Indicates parts not listed in any previous parts book. Prices and specifications subject to change without notice.
* Indicates change or addition. March 8, 1963 Supersedes May 1, 1962.

MyMopar.com

CODE	PART NAME AND DESCRIPTION	CYL.	PER CAR	VALIANT LANCER	PLYMOUTH DODGE	CHRYSLER IMPERIAL
15-11-0	**HOOD LOCK - Cont'd**					
15-11-3	SCREW, w/WASHER, Upper Lock	6	3	6022 525		
	Lower Lock	6	2	6022 525		
	Upper Lock		★	---- ---	6022 530	
	Lower Lock		★	---- ---	6022 506	
	Upper Lock	8	★	---- ---	---- ---	6022 506
	Lower Lock	8	★	---- ---	---- ---	6022 506
15-11-7	BRACE, Lower Lock, except SY1	8	1	---- ---	---- ---	1904 413
	Lock Support to Dust Shield, SY1	8	1	---- ---	---- ---	2099 801
15-11-9	NUT, w/WASHER, Upper Lock, SV1	6	3	2076 232		
15-11-12	PLATE, Lower Lock, SV1	6	1	2242 216		
15-11-16	SPRING, Lower Lock Locking Lever, SD3	8	1	---- ---	1904 104	
15-11-38	SPRING, Upper Lock Safety Catch		1	---- ---	2099 407	
	Upper Lock Locking Bolt		1	---- ---	2099 407	
	Upper Lock Safety Catch, SD3		1	---- ---	1541 977	
15-11-46	SUPPORT, Lock to Front Crossmember, SV1	6	1	*2082 086		
	Lower Lock Plate to Yoke, SD3, SC1, SC2	8	1	---- ---	1904 908	1904 908
	Lower Lock Plate to Yoke, SC3	8	1	---- ---	---- ---	1863 719
	Lower Lock Plate to Yoke, SY1	8	1	---- ---	---- ---	1904 173
	SCREW, Support to Yoke, Upper, SD3	8	4	---- ---	6022 506	6022 506
15-11-58	PLATE, Lower Lock Base, SL1	6	1	2195 520		
	Except SY1	8	1	---- ---	---- ---	1904 407
15-13-0	**HOOD LOCK STRIKER**					
15-13-2	STRIKER, Lower Lock		1	2195 497	2428 041	
	Upper Lock, SD3	8	1	---- ---	1863 331	1863 331
15-13-5	SPRING, Upper Lock Striker, SD3, SC1, SC2, SC3	8	1	---- ---	1903 285	1903 285
	Upper Lock Striker, SY1	8	1	---- ---	---- ---	1373 263
	Striker Bolt, SY1	8	1	---- ---	---- ---	1904 896
15-13-6	RETAINER, Upper Lock Striker Spring, SD3	8	1	---- ---	1696 605	1696 605
15-14-0	**HOOD LOCK CONTROL**					
15-14-1	CONTROL, on Instrument Panel, SY1	8	1	---- ---	---- ---	2217 195
	Hog Ring	8	2	---- ---	---- ---	6008 076
	CLIP	8	1	---- ---	---- ---	6015 143
15-14-12	STOP, Control Cable, SY1	8	1	---- ---	---- ---	932 143
15-14-13	SCREW, Cable Stop, SY1	8	1	---- ---	---- ---	988 098
15-14-20	GROMMET, Control Cable, SY1	8	1	---- ---	---- ---	2161 290
15-14-21	SLEEVE, Control Cable, SY1	8	1	---- ---	---- ---	2097 055
15-19-0	**HOOD HINGE**					
15-19-2	HINGE, Right	6	1	2082 020		
	Left	6	1	2082 021		
	Right		1	---- ---	2099 384	
	Left		1	---- ---	2099 385	
	Right, SD3, SC1, SC2	8	1	---- ---	1903 440	1903 440
	Left, SD3, SC1, SC2	8	1	---- ---	1903 441	1903 441

★ Indicates use as required. Numerals in parentheses ( ) refer to notes. Printed in U.S.A.
⊟ Indicates parts not listed in any previous parts book. Prices and specifications subject to change without notice.
* Indicates change or addition.

MyMopar.com

CODE	PART NAME AND DESCRIPTION	CYL.	PER CAR	VALIANT LANCER	PLYMOUTH DODGE	CHRYSLER IMPERIAL
15-19-0	**HOOD HINGE - Cont'd**					
15-19-2	HINGE - Cont'd					
	Right, SC3	8	1	---- ---	---- ---	1903 028
	Left, SC3	8	1	---- ---	---- ---	1903 029
	Right, SY1	8	1	---- ---	---- ---	1904 160
	Left, SY1	8	1	---- ---	---- ---	1904 161
	SCREW, w/WASHER, Hinge to Side Shield, SP1, SP2		2	---- ---	6022 533	
	Hinge to Hood, SP1, SP2		4	---- ---	6022 533	6022 532
	Hinge to Dash Shield, SP1, SP2		4	---- ---	6022 533	
	Hinge to Side Shield, SD1, SD2		2	---- ---	6022 532	
	Hinge to Hood, SD1, SD2		4	---- ---	6022 532	
	Hinge to Dash, SD1, SD2		4	---- ---	6022 532	
	Hinge to Cowl, except SY1	8	4	---- ---	---- ---	6022 534
	Hinge to Cowl, SY1	8	2	---- ---	---- ---	6022 536
	Hinge to Cowl, Right Side, SY1	8	2	---- ---	---- ---	6022 531
	Hinge to Inner Panel, SY1	8	2	---- ---	---- ---	1903 386
	Hinge to Fender Bracket, SY1	8	2	---- ---	---- ---	6022 237
	Hinge to Support, SY1	8	2	---- ---	---- ---	6022 536
	Hinge to Fender Shield, except SY1	8	4	---- ---	---- ---	6022 031
	Hinge to Flange Reinforcement, SC1, SC2, SC3	8	4	---- ---	---- ---	6022 187
	Hinge to Inner Panel REINFORCEMENT, SY1	8	4	---- ---	---- ---	6022 270
	STUD, Hinge to Cowl, Left Side only, SY1	8	2	---- ---	---- ---	6023 484
	SHIM, Hinge to Panel REINFORCEMENT, SY1	8	2	---- ---	---- ---	6010 031
15-19-8	SPRING, Hinge	6	2	2082 070		
			2	---- ---	2099 400	
	SD3, SC1, SC2	8	2	---- ---	1863 235	1863 235
	SC3	8	2	---- ---	---- ---	1863 708
	SY1	8	2	---- ---	---- ---	1754 236
15-19-40	U-NUT, Hinge to Fender	6	2	2082 878		
15-25-0	**HOOD MOULDING**					
	NOTE: See Exterior Moulding Illustrations in Front of Group 23 Body.					
15-25-6	TAPE, Hood Top Moulding, SY1	8	1	---- ---	---- ---	*2417 202

NOTES

MyMopar.com

CODE	PART NAME AND DESCRIPTION	CYL.	PER CAR	VALIANT LANCER	PLYMOUTH DODGE	CHRYSLER IMPERIAL

NOTES

MyMopar.com

GROUP 16 - PROPELLER SHAFT AND UNIVERSAL JOINT

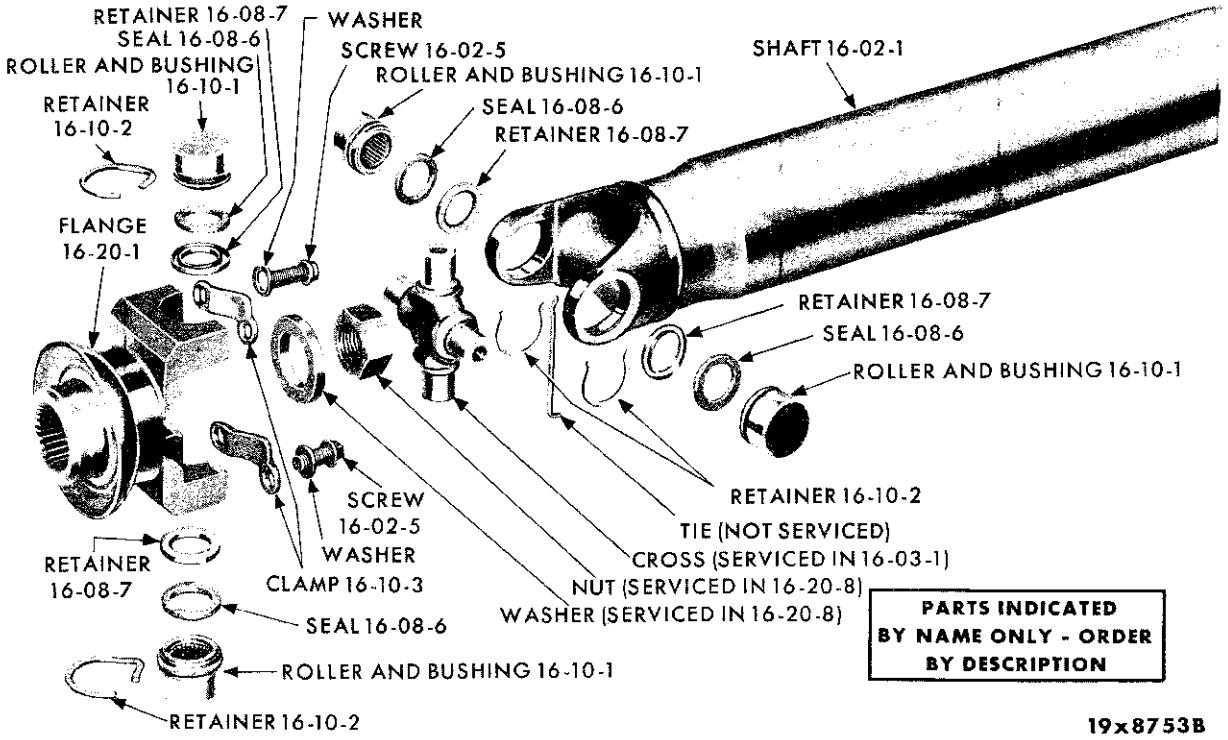

PROPELLER SHAFT - AXLE END

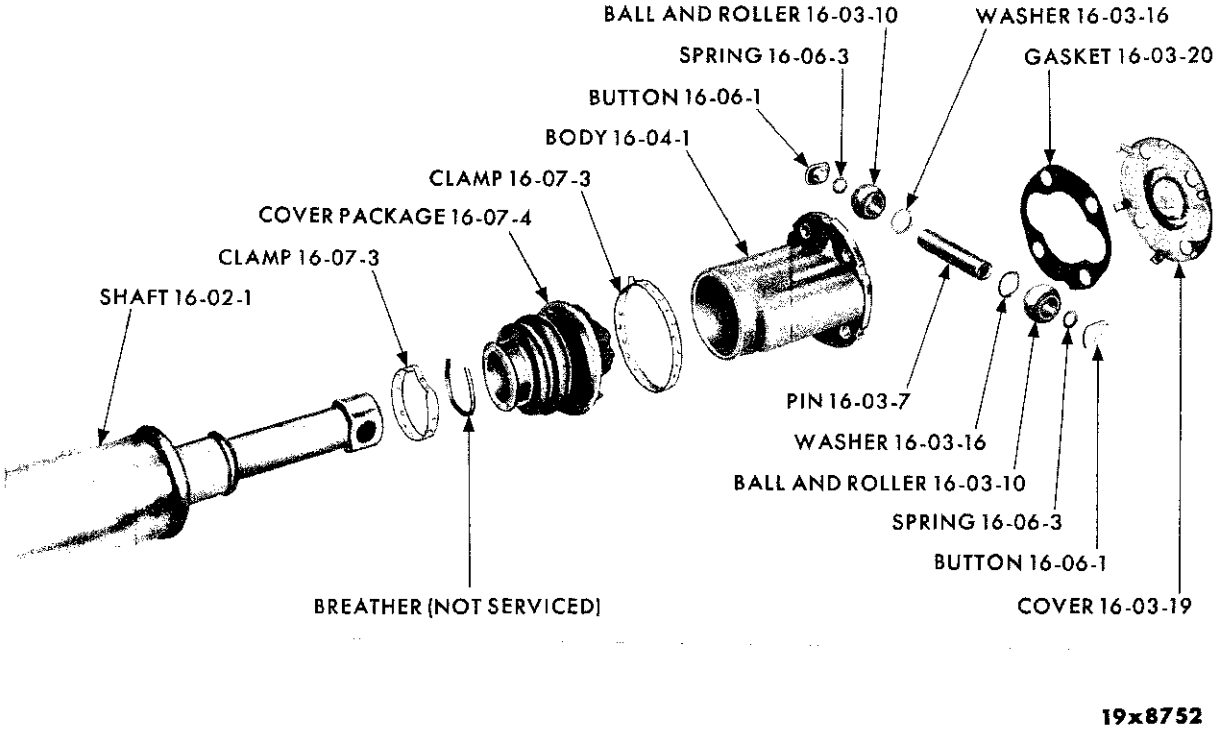

PROPELLER SHAFT - TRANSMISSION END

MyMopar.com

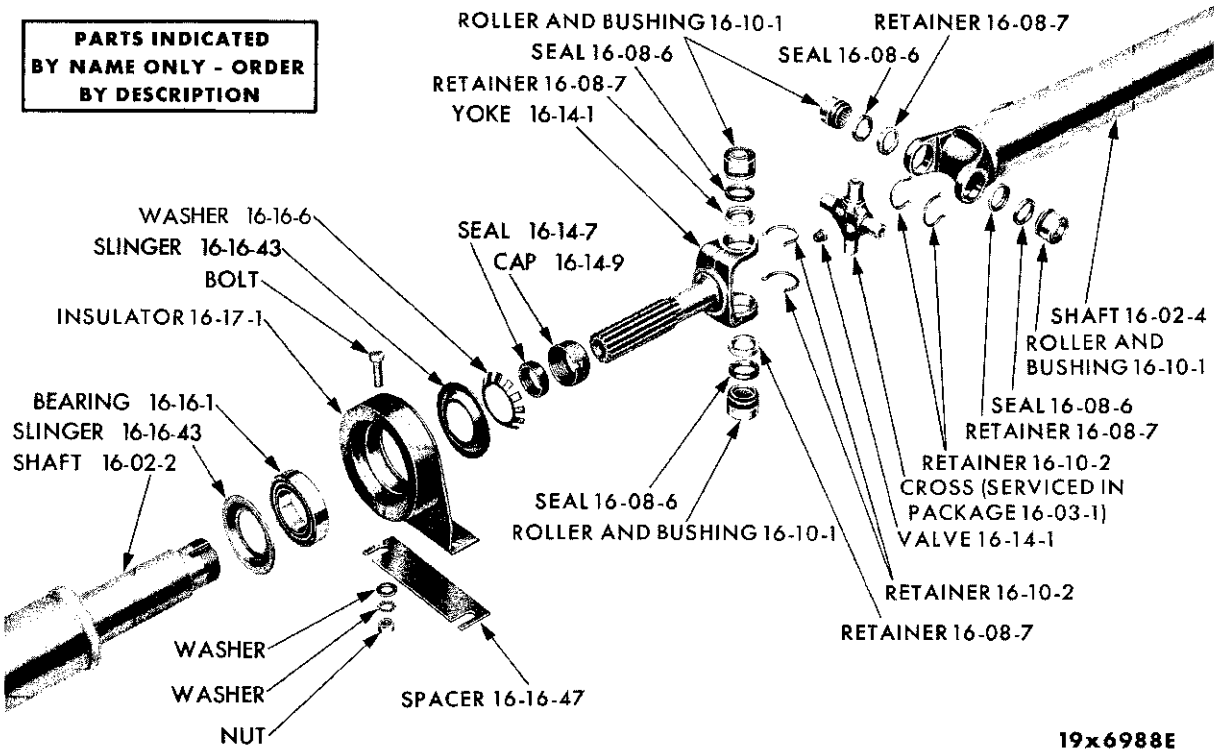

PROPELLER SHAFT CENTER BEARING - IMPERIAL SY1

NOTES

MyMopar.com

16-02-0 PROPELLER SHAFT

NOTE 1: Used w/Propeller Shaft No. 2071 017, 2269 974, 2401 359, 2401 362.
NOTE 2: Used w/Propeller Shaft No. 2401 355, 2206 994, 2200 534, 2401 351, 2401 641, 2401 669.
NOTE 3: Used w/Propeller Shaft No. 2206 974, 2071 017.
NOTE 4: Used w/Propeller Shaft No. 2401 359, 2401 362.
NOTE 5: Used w/Propeller Shaft No. 2401 355, 2401 351.
NOTE 6: Used w/Propeller Shaft No. 2206 994, 2200 534.
NOTE 7: When it becomes necessary to service Propeller Shafts or Front Universal Joints on cars with the 413 cu. in. Eng., Police Cars, it is recommended that the Shaft be replaced as a complete assembly.

CODE	PART NAME AND DESCRIPTION	CYL.	PER CAR	VALIANT LANCER	PLYMOUTH DODGE	CHRYSLER IMPERIAL
16-02-1	SHAFT, 53 3/8" lgh., 2 3/4" dia., w/Std. and 3 Speed Auto. Trans. w/3.23, 3.55 Axle Ratio, 170 cu. in. Eng.	6	1	2071 017		
	SHAFT, 53 3/8" lgh., 3" dia., w/Std. Trans., 3.91 Axle Ratio, 170 cu. in. Eng., w/Std. and 3 Speed Trans., 225 cu. in. Eng.	6	1	2206 974		
	53 7/8" lgh. 2 3/4" dia., w/3 Speed Auto. Trans.	6	1	---- ---	2401 359	
	53 3/4" lgh., 2 3/4" dia., SP1, SD1, w/Std. and Std. Heavy Duty Trans., SP2, SD2, w/Std. Trans.		1	---- ---	*2401 362	
	55 7/8" lgh., 3" dia., SP2, SD2, w/Std. Trans.	8	1	---- ---	*2401 351	
	55 7/8" lgh., 3" dia., SP2, SD2, w/Std. Heavy Duty Trans., Includes U/JOINTS, Police Cars	8	1	---- ---	*2401 350	
	53 5/8" lgh., 2 3/4" dia., SP2, SD2, w/3 Speed Auto. Trans.	8	1	---- ---	*2401 355	
	58 3/4" lgh., 3" dia., SD3, w/Std. Heavy Duty Trans., 361 cu. in. Eng., SC1, w/Std. Heavy Duty and 3 Speed Auto. Trans., 361 cu. in. Eng., SC2 w/Heavy Duty and 3 Speed Auto. Trans., 413 cu. in. Eng., SC2, w/Heavy Duty and 3 Speed Auto Trans., 383 cu. in. Eng., Police Cars	8	1	---- ---	*2401 641	*2401 641
	59 1/4" lgh., 3" dia., SD3, w/Std. Heavy Duty Trans., 361 cu. in. Eng., SC1, w/Std. Heavy Duty and 3Speed Auto. Trans., 361 cu. in. Eng., SC2 w/Std. Heavy Duty and 3 Speed Auto. Trans., 413 cu. in. Eng., SC2, w/Heavy Duty Std. Trans. and 3 Speed Auto. Trans., 383 cu. in. Eng. Police Cars	8	1	---- ---	*2206 994	*2206 994
	53 5/8" lgh., 2 3/4" dia., w/3 Speed Auto. Trans., SP2, SD2, w/413 cu. in. Eng., Also SP2, SD2, Police Cars, includes U/JOINTS	8	1	---- ---	*2401 356	
	54" lgh., 3" dia., SP2, SD2, w/Std. Heavy Duty Trans., 413 cu. in. Eng., includes U/JOINTS	8	1	---- ---	*2401 668	
	59 1/4" lgh., 3 1/4" dia., SD3, SC1, SC2, SC3, w/3 Speed Auto. Trans.	8	1	---- ---	2200 534	2200 534
16-02-2	SHAFT, Front, SY1	8	1	---- ---	---- ---	2200 527
16-02-4	SHAFT, Rear, SY1	8	1	---- ---	---- ---	1946 297
16-02-5	SCREW, Axle End, 9/16" lgh., 1/4" dia.		4	952 538	952 538	952 538
	BOLT, Trans. End, 1 5/16" lgh., 3/8" dia.	8	4	---- ---	1326 773	1326 773
	BOLT, Trans. End, 1 1/4" lgh. 3/8" dia.		4	1942 069	1942 069	1942 069

16-03-0 UNIVERSAL JOINT

16-03-1	JOINT PACKAGE, Ball and Pin Type, w/Std. and 3 Speed Auto. Trans.	6	1	2298 940		
	JOINT PACKAGE, Ball and Pin Type, SP1, SD1, w/Std. and 3 Speed Auto. Trans., Note 1		1	---- ---	*2298 940	
	JOINT PACKAGE, Ball and Pin Type, SP2, SD2, w/Std. and 3 Speed Auto, Trans., Note 2	8	1	---- ---	---- ---	*2298 941

★ Indicates use as required. Numerals in parentheses ( ) refer to notes. Printed in U.S.A.
B Indicates parts not listed in any previous parts book. Prices and specifications subject to change without notice.
* Indicates change or addition.

MyMopar.com

CODE	PART NAME AND DESCRIPTION	CYL.	PER CAR	VALIANT LANCER	PLYMOUTH DODGE	CHRYSLER IMPERIAL
16-03-0	**UNIVERSAL JOINT - Cont'd**					
16-03-1	JOINT PACKAGE, Ball and Pin Type, SD3, SC1, SC2, w/Std. Heavy Duty Trans., SD3, SC1, SC2, SC3, w/3 Speed Auto. Trans.	8	1	---- ---	---- ---	2298 941
	JOINT PACKAGE, Cross and Roller Type, SV1, SL1, SP1, SD1, w/Std. and 3 Speed Auto. Trans., SP2, SD2, SD3, SC1, SC2, w/Heavy Duty and 3 Speed Auto. Trans., SC3, SY1		★	1752 624	1752 624	1752 624
16-03-3	ROLLER		1	* 638 637	* 638 637	* 638 637
16-03-7	PIN, Note 1		1	579 445	579 445	579 445
	Note 2		1	1739 923	1739 923	1739 923
16-03-10	BALL, w/ROLLER		2	1739 927	1739 927	1739 927
16-03-16	WASHER, Thrust		1	605 004	605 004	605 004
16-03-19	COVER, Grease, Note 3		1	602 820	602 820	602 820
	Note 6		1	1635 092	1635 092	1635 092
	Note 4		1	2266 923	2266 923	2266 923
	Note 5		1	2266 922	2266 922	
16-03-20	GASKET, Note 1		1	1616 185	1616 185	1616 185
	Note 2		1	1635 098	1635 098	1635 098
16-04-0	**UNIVERSAL JOINT BODY**					
16-04-1	BODY, Note 1		1	1734 159	1734 159	1734 159
	Note 2	8	1	---- ---	1739 920	1739 920
16-06-0	**UNIVERSAL JOINT CENTERING BUTTON**					
16-06-1	BUTTON, Note 1		2	629 768	629 768	629 768
	Note 2		2	---- ---	1739 924	1739 924
16-06-3	SPRING, Centering Button		2	1739 926	1739 926	1739 926
16-07-0	**UNIVERSAL JOINT COVER**					
16-07-3	CLAMP, Cover, Small		1	870 540	870 540	870 540
	Large, Note 1		1	870 539	870 539	870 539
	Large, Note 2		1	1532 943	1532 943	1532 943
16-07-4	COVER PACKAGE, Dust, Note 1		1	1603 397	1603 397	1603 397
	Note 2		1	---- ---	2275 514	2275 514
16-08-0	**UNIVERSAL JOINT CROSS**					
16-08-6	SEAL, Dust		4	857 999	857 999	857 999
16-08-7	RETAINER, Seal		4	1739 912	1739 912	1739 912
16-10-0	**UNIVERSAL CROSS ROLLER AND BUSHING**					
16-10-1	ROLLER, w/BUSHING		4	1739 913	1739 913	1739 913
16-10-2	RETAINER, Roller Bushing		2	858 006	858 006	858 006
16-10-3	CLAMP, Roller Bushing		2	1828 824	1828 824	1828 824

★ Indicates use as required. Numerals in parentheses ( ) refer to notes. Printed in U.S.A.
⊟ Indicates parts not listed in any previous parts book. Prices and specifications subject to change without notice.
March 8, 1963 Supersedes May 1, 1962. * Indicates change or addition.

MyMopar.com

CODE	PART NAME AND DESCRIPTION	CYL.	PER CAR	VALIANT LANCER	PLYMOUTH DODGE	CHRYSLER IMPERIAL
16-14-0	**PROPELLER SHAFT SPLINE OR SLIDING YOKE**					
16-14-1	YOKE, SY1		1	---- ---	---- ---	1739 915
	VALVE, Pressure Release, SY1		1	---- ---	---- ---	* 106 671
16-14-7	SEAL, Spline, SY1		1	---- ---	---- ---	1672 049
16-14-9	CAP, Seal, SY1		1	---- ---	---- ---	1672 050
16-16-0	**PROPELLER SHAFT CENTER BEARING**					
16-16-1	BEARING, SY1		1	---- ---	---- ---	1672 051
16-16-6	WASHER, Lock, SY1		1	---- ---	---- ---	1638 151
16-16-25	RING, Shaft Bearing Snap, Outer, Thin		★	640 280	640 280	640 280
16-16-43	SLINGER. Bearing Dust. SY1		1	---- ---	---- ---	1672 053
16-16-47	SPACER, Bearing, except Conv. Cp., SY1		★	---- ---	---- ---	1945 836
	Conv. Cp., SY1		★	---- ---	---- ---	1856 944
16-17-0	**PROPELLER SHAFT CENTER BEARING HOUSING INSULATOR**					
16-17-1	INSULATOR, except Cv. Cp., SY1		1	---- ---	---- ---	1945 831
	Cv. Cp., SY1		1	---- ---	---- ---	1856 942
16-20-0	**PROPELLER SHAFT FLANGE**					
	NOTE: For Trans. Shaft Flange not shown see Part Type Code 4-01-1 Hand Brake Drum and Flange Assembly.					
16-20-1	FLANGE, Trans. End, w/Std. and 3 Speed Auto. Trans.	6	1	1949 378	---- ---	---- ---
	Heavy Duty Std. Trans.	6	1	---- ---	2400 012	
	w/3 Speed Auto. Trans.	6	1	---- ---	2400 010	
	w/Std. Trans.	6	1	---- ---	2124 279	
	Heavy Duty Std. Trans. and 3 Speed Auto. Trans.	8	1	---- ---	2400 013	2125 130
	Std. Trans.	8	1	---- ---	2400 011	
	ADAPTER, Trans. Flange, SY1	8	1	---- ---	---- ---	2200 214
	FLANGE PACKAGE, Axle End		1	2240 614	2240 612	2240 612
16-20-2	WASHER, Axle End		1	2070 117	1556 556	1556 556
16-20-3	NUT, Axle End		1	1556 638	1556 638	1556 638
16-20-5	SCREW, Trans. Flange		4	1942 069	1942 069	
	w/Internal Brake	8	4	---- ---	1326 773	1326 773
	Axle End		4	952 538	952 538	952 538
16-20-8	NUT PACKAGE, Trans. Output Flange, includes WASHER		1	*2298 967	*2298 967	*2298 967

NOTES

MyMopar.com

CODE	PART NAME AND DESCRIPTION	CYL.	PER CAR	VALIANT LANCER	PLYMOUTH DODGE	CHRYSLER IMPERIAL

NOTES

MyMopar.com

GROUP 17 - SPRINGS

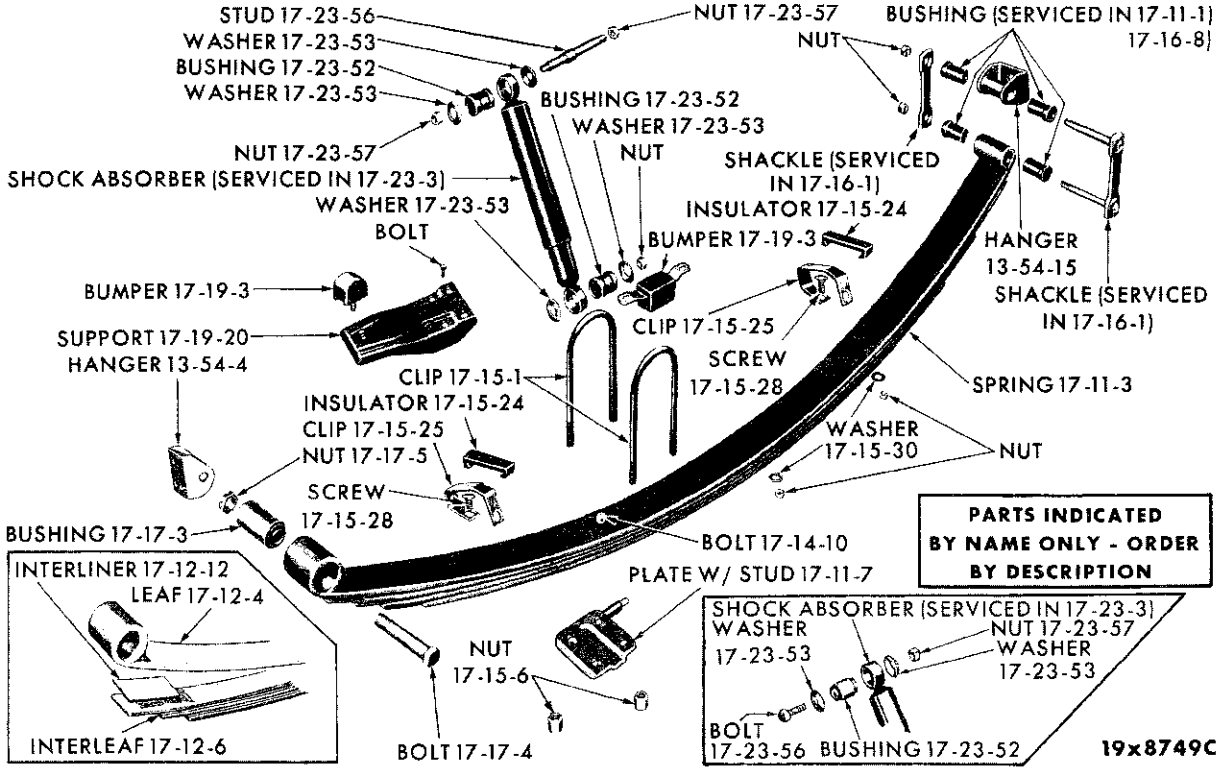

REAR SPRING - VALIANT SV1, LANCER SL1, PLYMOUTH SP1-2 AND DODGE SD1-2

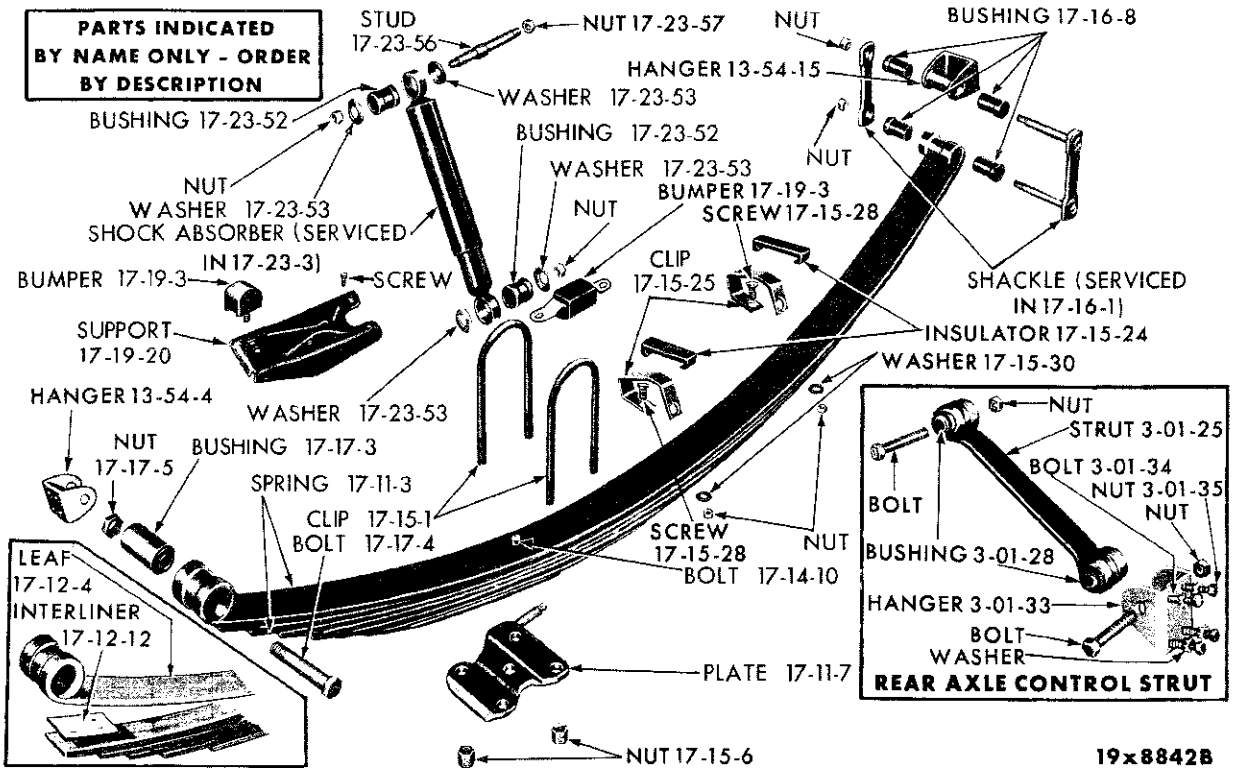

REAR SPRING - DODGE SD3, CHRYSLER SC1-2-3 AND IMPERIAL SY1

MyMopar.com

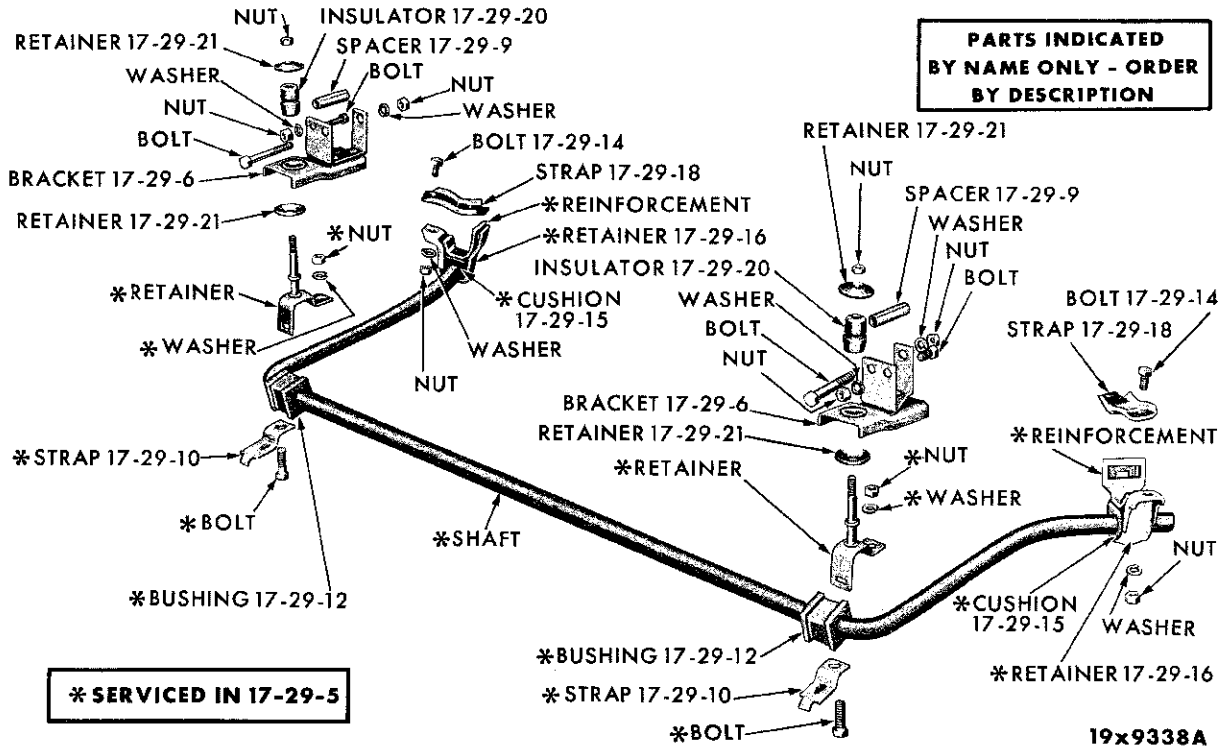

SWAY ELIMINATOR - PLYMOUTH SP1-2 AND DODGE SD1-2

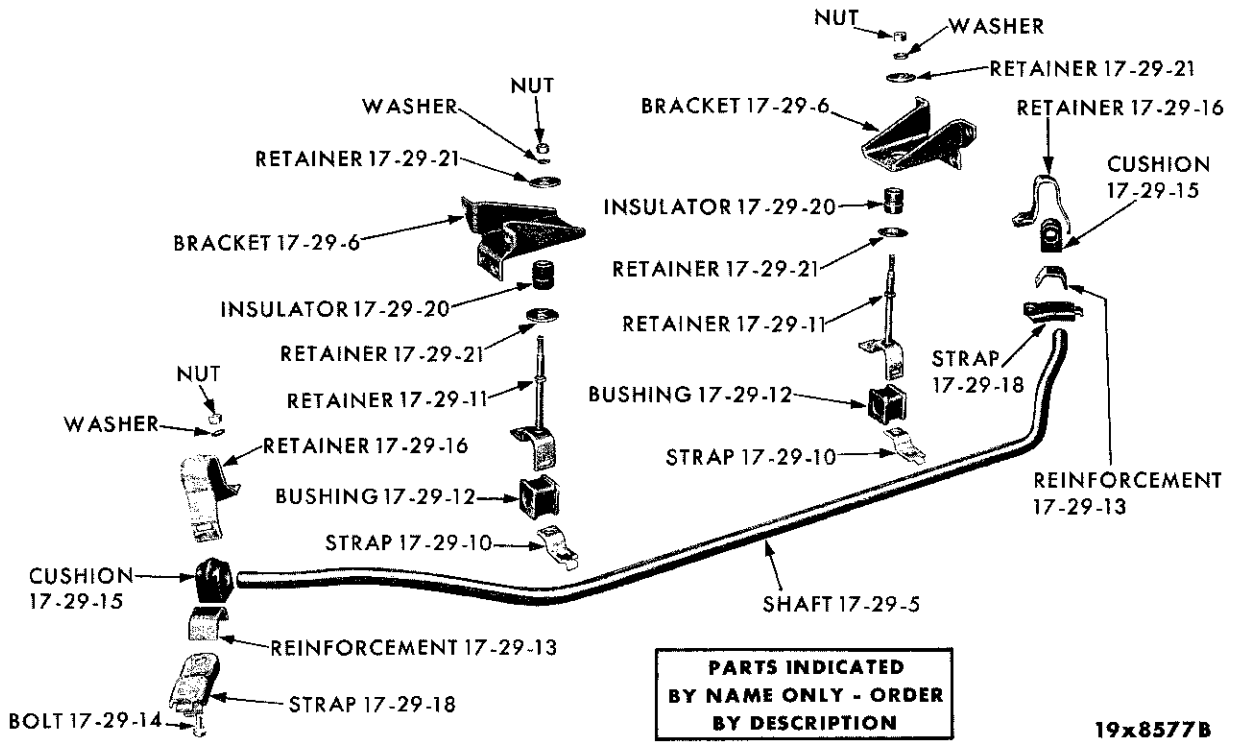

SWAY ELIMINATOR - DODGE SD3, CHRYSLER SC1-2-3 AND IMPERIAL SY1

MyMopar.com

CODE	PART NAME AND DESCRIPTION	CYL.	PER CAR	VALIANT LANCER	PLYMOUTH DODGE	CHRYSLER IMPERIAL
17-11-0	**REAR SPRINGS**					
17-11-1	BUSHING PACKAGE	6	2	2196 011		
17-11-3	SPRING, Std., except Sub.	6	2	*2275 851	*2275 858	
	Except Sub., w/225 cu. in. Eng., Right	6	1	2298 934		
	Except Sub., w/225 cu. in. Eng., Left	6	1	2298 935		
	Std., Sub., Right	6	1	2275 852	2275 863	
	Std., Sub., Left	6	1	2275 853	2275 864	
	Heavy Duty, except Sub., Right	6	1	2275 855	2275 862	
	Heavy Duty, except Sub., Left	6	1	2298 513	2275 862	
	Heavy Duty, Sub., Right	6	1	2275 856	2275 866	
	Heavy Duty, Sub., Left	6	1	2275 857	2275 867	
	Std., 2 D., Sp. Cl. Cp., w/318 cu. in. Eng.	8	2	---- ---	2275 858	
	Std., 4 D., Sp. 4 D., Cv. Cp., w/318 cu. in. Eng.	8	2	---- ---	2275 859	
	Std., w/361 cu. in. Eng., SP2, SD2	8	2	---- ---	*2298 929	
	Std., Sub., Right, SP2, SD2	8	1	---- ---	2275 864	
	Std., Sub., Left, SP2, SD2	8	1	---- ---	2275 865	
	Heavy Duty, 4 D., SP. 4 D., Cv. Cp., SP2, SD2	8	2	---- ---	2298 512	
	Heavy Duty, 2 D., Sp. Cl. Cp., w/318 cu. in. Eng.	8	2	---- ---	2275 862	
	Heavy Duty, w/361 cu. in. Eng., SP2, SD2	8	2	---- ---	*2298 512	
	Heavy Duty, Sub., Right, SP2, SD2	8	1	---- ---	2275 867	
	Heavy Duty, Sub., Left, SP2, SD2	8	1	---- ---	2275 868	
	Std., except Sub., w/o Dual Air Conditioning, Right, SD3, SC1, SC2	8	1	---- ---	2275 872	2275 872
	Std., except Sub., w/o Dual Air Conditioning, Left, SD3, SC1, SC2	8	1	---- ---	2275 873	2275 873
	Std., except Sub., w/Dual Air Conditioning, Right SC1, SC2	8	1	---- ---	---- ---	2275 873
	Std., except Sub., w/Dual Air Conditioning, Left, SC1, SC2	8	1	---- ---	---- ---	2275 874
	Std., Sub., Right, SD3, SC1	8	1	---- ---	2275 876	2275 876
	Std., Sub., Left, SD3, SC1	8	1	---- ---	2275 875	2275 875
	SC2 w/413 cu. in. Eng.	8	2	---- ---	---- ---	2275 869
	Std., except Sub., Right, SC3	8	1	---- ---	---- ---	2084 908
	Std., except Sub., Left, SC3	8	1	---- ---	---- ---	2084 909
	Except Sub., w/Air Conditioning, Right, SC3	8	1	---- ---	---- ---	2240 240
	Except Sub., w/Air Conditioning, Left, SC3	8	1	---- ---	---- ---	2240 241
	Std., Sub., Right, SC3	8	1	---- ---	---- ---	2275 881
	Std., Sub., Left, SC3	8	1	---- ---	---- ---	2275 882
	Heavy Duty, except Sub., SD3, SC1, SC2	8	2	---- ---	2240 686	2240 686
	Heavy Duty, Sub., SD3, SC1	8	2	---- ---	2275 879	2275 879
	Heavy Duty, except Sub., Right, SC3	8	1	---- ---	---- ---	2275 877
	Heavy Duty, except Sub., Left, SC3	8	1	---- ---	---- ---	2275 878
	Heavy Duty, Sub., Right, SC3	8	1	---- ---	---- ---	2275 870
	Heavy Duty, Sub., Left, SC3	8	1	---- ---	---- ---	2275 871
	Std., Right, SY1	8	1	---- ---	---- ---	2196 789
	Std., Left, SY1	8	1	---- ---	---- ---	2196 790
	w/Air Conditioning, Right, SY1	8	1	---- ---	---- ---	2196 789
	w/Air Conditioning, Left, SY1	8	1	---- ---	---- ---	2196 791
	Heavy Duty, Right, SY1	8	1	---- ---	---- ---	2196 792
	Heavy Duty, Left, SY1	8	1	---- ---	---- ---	2196 793
17-11-5	PLATE, Seat Angle, Sub., SD3, SC1, SC3	8	2	---- ---	2122 857	2122 857
17-11-7	PLATE, w/STUD, Right, except SD3		1	2071 766	1856 346	
	Left, except SD3		1	2071 767	1856 347	
	Right, except Sub., SD3, SC1, SC2	8	1	---- ---	1856 344	1856 344
	Left, except Sub., SD3, SC1, SC2	8	1	---- ---	1856 345	1856 345

★ Indicates use as required. Numerals in parentheses ( ) refer to notes. Printed in U.S.A.
⊟ Indicates parts not listed in any previous parts book. Prices and specifications subject to change without notice.
* Indicates change or addition.

MyMopar.com

CODE	PART NAME AND DESCRIPTION	CYL.	PER CAR	VALIANT LANCER	PLYMOUTH DODGE	CHRYSLER IMPERIAL
17-11-0	**REAR SPRINGS - Cont'd**					
17-11-7	PLATE, w/STUD - Cont'd					
	Right, Sub., SD3, SC1	8	1	---- ---	*1856 346	*1856 346
	Left, Sub., SD3, SC1	8	1	---- ---	*1856 347	*1856 347
	Right, SC3, SY1	8	1	---- ---	---- ---	1856 346
	Left, SC3, SY1	8	1	---- ---	---- ---	1856 347
17-11-10	INSULATOR, Spring, Lower, SD3, SC1, SC2, except Sub.	8	2	---- ---	*1731 798	*1731 798
	Upper, SD3, SC1, SC2, except Sub.	8	2	---- ---	*1731 796	*1731 796
17-12-0	**REAR SPRING LEAF**					
17-12-4	LEAF, Main, Std., except SD3		2	*2196 784	*2084 819	
	Std., SD3, SC1, SC2	8	2	---- ---	*2084 822	*2084 822
	Std., except Sub., SC3	8	2	---- ---	---- ---	2084 823
	Std., Sub., SC3	8	2	---- ---	---- ---	2084 825
	Std., SY1	8	2	---- ---	---- ---	2196 787
	Heavy Duty, except Sub., except SD3		2	*2196 785	*2084 818	
	Heavy Duty, Sub., except SD3		2	*2196 786	*2084 818	
	Heavy Duty, or w/Dual, Air Conditioning, except Sub., SD3, SC1, SC2	8	2	---- ---	*2084 820	*2084 820
	Heavy Duty, Sub., SD3, SC1	8	2	---- ---	*2084 821	*2084 821
	Heavy Duty, except Sub., SC3	8	2	---- ---	---- ---	2084 824
	Heavy Duty, Sub., SC3	8	2	---- ---	---- ---	2298 920
	Heavy Duty, SY1	8	2	---- ---	---- ---	2196 788
	SP2, SD2, w/361 cu. in. Eng., SC2 w/413 cu. in. Eng.	8	2	---- ---	*2298 918	*2298 919
17-12-6	INTERLEAF, SY1	8	4	---- ---	---- ---	2123 781
17-12-12	INTERLINER	6	★	1948 396		
	Front End		★	---- ---	2122 359	2122 359
	Rear End, w/FASTENERS		★	---- ---	2123 785	2123 785
17-14-0	**REAR SPRING CENTER BOLT**					
17-14-10	BOLT		2	1944 361	1944 361	1944 361
17-15-0	**REAR SPRING CLIP**					
17-15-1	CLIP, 5 3/8" lgh.	6	4	2071 771		
	5 7/8" lgh.	6	4	2071 787		
	7" lgh.		4	---- ---	1489 747	1489 747
	7 3/8" lgh.		4	*1635 666	1635 666	1635 666
17-15-6	NUT		8	6023 020	6023 021	6023 021
17-15-24	INSULATOR, Alignment Clip		2	1829 929	1829 929	1829 929
17-15-25	CLIP, Alignment, 1" lgh.		★	1820 812	1820 812	1820 812
	1 1/4" lgh., SC1, SC2		2	1820 152	1820 152	1820 152
	1 1/2" lgh., SC1, SC2, SY1	8	2	---- ---	1820 153	1820 153
	1 7/8" lgh., SC3, SY1		2	---- ---	1820 813	1820 813
17-15-28	SCREW, Alignment		4	1485 510	1485 510	1485 510
17-15-30	WASHER, Screw		4	1530 398	1530 398	1530 398
17-16-0	**REAR SPRING SHACKLE**					
17-16-1	SHACKLE and BUSHING PACKAGE		2	2196 010		
	Except Sub., SC1, SC2		2	---- ---	1450 961	1450 961
	Except Sub., SC3, SY1	8	2	---- ---	---- ---	1450 087
	Sub., except SD3		2	---- ---	*2275 543	
	Sub., SD3, SC1, SC3	8	2	---- ---	*2084 236	*2084 236

★ Indicates use as required. Numerals in parentheses ( ) refer to notes. Printed in U.S.A.
⊟ Indicates parts not listed in any previous parts book. Prices and specifications subject to change without notice.
May 1, 1962 Supersedes Nov. 30, 1961. * Indicates change or addition.

MyMopar.com

CODE	PART NAME AND DESCRIPTION	CYL.	PER CAR	VALIANT LANCER	PLYMOUTH DODGE	CHRYSLER IMPERIAL
17-16-0	**REAR SPRING SHACKLE - Cont'd**					
17-16-8	BUSHING, Shackle		8	---- ---	1400 269	1400 269
17-17-0	**REAR SPRING SILENT BLOCK**					
17-17-3	BUSHING, Front Pivot, SC1, SC2, SC3		2	2071 763	1948 869	1948 869
	SY1		2	---- ---	---- ---	1530 380
17-17-4	BOLT, SC1, SC2, SC3		2	2071 761	1948 876	1948 876
	SY1			---- ---	---- ---	1400 788
17-17-5	NUT		2	6023 020	1948 877	1948 877
17-19-0	**REAR SPRING BUMPER**					
17-19-3	BUMPER, Axle Drive Pinion Carrier, except SD3		1	2206 637	2206 637	
	w/413 cu. in. Eng.	8	1	---- ---	*1948 338	
	SD3, SC1, SC2, SC3	8	1	---- ---	1948 338	1948 338
	SY1	8	1	---- ---	---- ---	2206 637
	Std., Side Rail Rear Axle, w/PLATE, except Sub., except SD3		2	2071 778	2206 940	
	Std., w/PLATE, SD3, SC1, SC2, SC3	8	2	---- ---	2206 884	2206 884
	Heavy Duty, w/o Plate, except SD3		2	1940 238	1940 238	
	Heavy Duty, w/PLATE, SD3, SC1, SC2, SC3		2	2206 938	2206 939	2206 939
	Std., SY1	8	2	---- ---	---- ---	1828 851
	Heavy Duty, w/o Plate and Block	8	2	---- ---	---- ---	1940 238
	Heavy Duty, w/PLATE and BLOCK	8	2	---- ---	---- ---	1940 234
17-19-4	BRACKET, Bumper	6	1	2081 013		
17-19-6	NUT, Axle Drive Pinion Carrier Bumper Retainer, SD3, SC1, SC2, SC3		1	1943 997	1943 997	1943 997
17-19-10	PLATE, Side Rail Rear Axle Bumper, SC1, SC2, SC3		2	---- ---	2206 883	2206 883
	Axle Drive Pinion Carrier, SY1	8	1	---- ---	---- ---	1730 183
	SCREW, w/WASHER, Bumper Plate		4	6022 311	6022 311	
17-19-20	SUPPORT, Axle Drive Pinion Carrier Bumper, except SD3		1	2071 774	2070 645	
	w/413 cu. in. Eng.	8	1	---- ---	⊟2403 265	
	SD3, SC1, SC2, SC3	8	1	---- ---	1948 351	1948 351
	SY1	8	1	---- ---	---- ---	1673 531
	REINFORCEMENT, except SD3		1	---- ---	2251 351	
17-23-0	**SHOCK ABSORBERS**					
17-23-3	PACKAGE, Shock Absorber, Rear, Std., except SD3		2	2240 317	2275 847	
	Rear, Std., SD3, SC1, SC2, SC3	8	2	---- ---	2240 358	2240 358
	Rear, Std., SY1	8	2	---- ---	---- ---	2240 359
	Rear, Heavy Duty, except SD3		2	2298 912	2275 849	
	Rear, Heavy Duty, SD3, SC1, SC2, SC3	8	2	---- ---	2240 360	2240 360
	Rear, Heavy Duty, SY1	8	2	---- ---	---- ---	2240 361
	Rear, Heavy Duty, 1 3/8" dia., except SD3		2	---- ---	2275 848	
	Rear, Heavy Duty, 1 3/8" dia., SD3, SC1, SC2, SC3	8	2	---- ---	2240 362	2240 362
	Front, Std., except SD3		2	2298 803	2275 884	
	Front, Std., SD3, SC1, SC2, SC3	8	2	---- ---	2298 806	2298 806
	Front, Std., SY1	8	2	---- ---	---- ---	2298 805
	Front, Heavy Duty, except SD3		2	2298 804	2275 883	2298 807
	Front, Heavy Duty, SD3	8	2	---- ---	2298 807	

★ Indicates use as required. Numerals in parentheses ( ) refer to notes. Printed in U.S.A.
⊟ Indicates parts not listed in any previous parts book. Prices and specifications subject to change without notice.
* Indicates change or addition.

March 8, 1963 Supersedes May 1, 1962.

MyMopar.com

CODE	PART NAME AND DESCRIPTION	CYL.	PER CAR	VALIANT LANCER	PLYMOUTH DODGE	CHRYSLER IMPERIAL
17-23-0	**SHOCK ABSORBERS - Cont'd**					
17-23-52	BUSHING, Front Shock Absorber Upper Mounting		2	2206 923	2206 923	2206 923
	Lower Mounting		2	1635 588	1635 588	1635 588
	Rear, Upper, except SD3		2	1319 902	2201 554	1319 902
	Rear, Upper, SD3	8	2	---- ---	1319 902	
	Rear, Lower		2	1319 902	1319 902	1319 902
17-23-53	WASHER, Pivot Bushing Retainer Inner, Rear		4	1319 555	1319 555	1319 555
	Outer		4	1319 554	1319 554	1319 554
	Upper Mounting Bushing, Front		4	2206 925	2206 925	2206 925
17-23-56	STUD, Upper Mounting, Rear	6	2	*2071 714		
	Rear, SD3	8	2	---- ---	1948 884	1948 884
	BOLT, Lower Mounting, Front		2	6022 823	6022 823	6022 823
	BOLT, Upper Mounting, Rear, except SD3		2	---- ---	182 785	
17-23-57	NUT, Upper Stud, Rear, SD3		2	6022 136	6022 136	6022 136
	Upper Mounting Bolt, except SD3		2	---- ---	1929 355	
	Lower Mounting Bolt, Front		2	6022 831	6022 831	6022 831
17-24-0	**SHOCK ABSORBER BRACKET**					
17-24-3	BRACKET, Rear, Right, except SD3		1	---- ---	2188 050	
	Left, except SD3		1	---- ---	2188 051	
17-24-28	SUPPORT, Front Shock Absorber, SD3	8	2	---- ---	1675 821	1675 821
17-29-0	**SWAY ELIMINATOR SHAFT**					
17-29-5	SHAFT, except SD3		1	---- ---	1857 906	
	SD3, SC1, SC2	8	1	---- ---	1671 437	1671 437
	SC3, SY1	8	1	---- ---	---- ---	1672 964
17-29-6	BRACKET, Support, Right, except SD3		1	---- ---	1858 100	
	Left, except SD3		1	---- ---	1858 101	
	Frame, SD3, SC1, SC2		2	---- ---	1824 879	1824 879
17-29-9	SPACER, Support Bracket, Except SD3		2	---- ---	1858 105	
17-29-10	STRAP, Bushing		2	---- ---	1673 065	1673 065
17-29-11	RETAINER, Bushing, SD3	8	2	---- ---	1673 060	1673 060
17-29-12	BUSHING, except SD3		2	---- ---	1824 935	1824 936
	SD3	8	2	---- ---	1824 936	
17-29-13	REINFORCEMENT, Cushion, SD3	8	2	---- ---	1672 989	1672 989
17-29-14	BOLT, Cushion Strap, except SD3		2	---- ---	6023 012	1824 934
	SD3	8	2	---- ---	1824 934	
17-29-15	CUSHION, except SD3		2	---- ---	1731 341	1673 090
	SD3	8	2	---- ---	1673 090	
17-29-16	RETAINER, Cushion		2	---- ---	1672 988	1672 988
17-29-18	STRAP, Cushion, except SD3		2	---- ---	1857 911	1731 275
	SD3	8	2	---- ---	1731 275	
17-29-20	INSULATOR, Link		2	---- ---	1734 315	1734 315
17-29-21	RETAINER, Insulator		4	---- ---	1558 352	1558 352

MyMopar.com

GROUP 18 - STANDARD PARTS

The Standard Parts listed herein are furnished only in carton quantities, and should be ordered in these quantities or multiples thereof.

BALL - STEEL

Plate 18-1

Diameter	Part No.	Ctn. Qty.	Diameter	Part No.	Ctn. Qty.
1/4	104 918	50	5/8	104 924	10
5/16	104 919	50	7/8	104 927	5
11/32	119 282	25			

BOLT - HEXAGON HEAD

National Coarse Thread

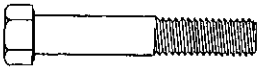

Plate 18-2

Length	Diameter & Thread 1/4-20 Part No.	1/4-20 Carton Qty.	5/16-18 Part No.	5/16-18 Carton Qty.	3/8-16 Part No.	3/8-16 Carton Qty.	7/16-14 Part No.	7/16-14 Carton Qty.	1/2-13 Part No.	1/2-13 Carton Qty.
1/2	180 016	50			180 116	25			180 166	25
5/8	180 018	100								
3/4	180 020	50	180 077	25			180 143	25		
1	180 022	50	180 079	25	180 122	25				
1-1/4	180 024	50	180 081	25	180 124	25			180 175	10
1-1/2	180 034	25			180 126	25	180 149	10		
1-3/4			181 094	25			180 151	10		
2					181 126	25			180 181	10
2-1/2	180 048	10					180 157	10		
3			180 113	10			180 160	10	180 190	10
3-3/4					186 284	10				
4			189 298	10	186 285	10	180 165	10		
5							272 406	50		

BOLT - HEXAGON HEAD

National Fine Thread

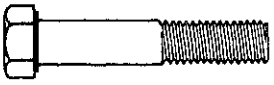

Plate 18-3

Length	Diameter & Thread 1/4-28 Part No.	1/4-28 Carton Qty.	5/16-24 Part No.	5/16-24 Carton Qty.	3/8-24 Part No.	3/8-24 Carton Qty.	7/16-20 Part No.	7/16-20 Carton Qty.	1/2-20 Part No.	1/2-20 Carton Qty.	9/16-18 Part No.	9/16-18 Carton Qty.
1/2	181 561	50			181 627	25			181 683	25		
5/8			181 593	25								
3/4			181 595	25								
1	181 568	50	181 608	25	181 637	25			181 696	25		
1-1/4			181 610	25	181 639	25	181 668	25	181 698	10		
1-1/2			181 614	25	181 643	25	181 670	10	181 700	10	181 727	10
1-3/4	181 577	25			181 646	25	181 672	10	660 378	10		
2	181 579	25	181 620	25			181 674	10	181 705	10	181 731	10
2-1/4											2228 700	10
2-1/2					181 650	10			181 709	10		
2-3/4			181 623	10								
3			182 703	10	181 652	10			181 711	10	181 735	10
					186 310	10	181 680	10	182 788	10		
4							181 682	10			181 747	10
4-1/4							187 612	10				

▲ - Indicates bright finish.

MyMopar.com

BUSHING
Pipe Reducing

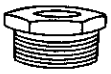

Plate 18-4

Ext. Thd.	Int. Thd.	Part No.	Carton Qty.
1/4	1/8	119 930	5
3/8	1/8	119 923	5
1/2	1/4	144 051	5
1/2	3/8	120 322	5

CONNECTOR
Flared Tube

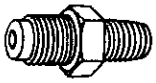

Plate 18-6

Diameter	Taper Thd.	Thread	Part No.	Carton Qty.
1/4	1/8	7/16-20	118 748	5
5/16	1/8	1/2-20	118 749	5
3/8	1/4	5/8-20	118 750	5
7/16	1/4	11/16-16	118 751	5
1/2	3/8	3/4-16	118 752	5

COUPLING - PIPE

Plate 18-8

Diameter & Thread	Part No.	Carton Qty.
1/8 x .96	105 408	5

ELBOW
Ball, Sleeve Tubing

Plate 18-10

Diameter	Taper Thd.	Thread	Part No.	Carton Qty.
1/4	1/8	7/16-24	114 632	10
5/16	1/8	1/2-24	114 633	10
3/8	1/4	9/16-24	140 305	10

ELBOW
Inverted Flared Tube, 45 Degree

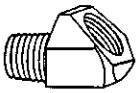

Plate 18-12

Diameter	Taper Thd.	Thread	Part No.	Carton Qty.
3/16	1/8	3/8-24	127 829	5
1/4	1/8	7/16-24	125 859	5
5/16	1/8	1/2-20	116 341	5
3/8	1/4	5/8-18	143 338	5

CONNECTOR
Ball Sleeve Tubing

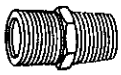

Plate 18-5

Tube Dia.	Taper Thd.	Thd. Size	Part No.	Carton Qty.
5/16	1/8	1/2-24	114 629	10

CONNECTOR
Inverted Flared Tube

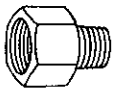

Plate 18-7

Diameter	Taper Thd.	Thread	Part No.	Carton Qty.
1/8	1/8	5/16-28	137 403	5
1/4	1/8	7/16-24	111 345	5
5/16	1/8	1/2-20	137 406	5
3/8	1/4	5/8-18	137 407	5
1/2	3/8	3/4-18	143 426	5

DRAIN COCK

Plate 18-9

Diameter	Part No.	Carton Qty.
1/4	103 647	5

ELBOW
Flared Tube

Plate 18-11

Diameter	Taper Thd.	Thread	Part No.	Carton Qty.
3/16	1/8	3/8-24	121 339	5

ELBOW
Inverted Flared Tube, 90 Degree

Plate 18-13

Diameter	Taper Thd.	Thread	Part No.	Carton Qty.
3/16	1/8	3/8-24	137 420	5
1/4	1/8	7/16-24	137 421	5
5/16	1/8	3/8-20	137 422	5
5/16	1/4	1/2-18	143 343	5
3/8	1/4	5/8-18	137 423	5
7/16	1/4	11/16-18	137 424	5
1/2	1/4		188 947	5

▲ - Indicates bright finish.

MyMopar.com

ELBOW

Pipe, 90 Degree

Plate 18-14

Diameter	Part No.	Carton Qty.
1/4	105 413	5

FITTING - LUBRICATING

Ball and Spring Type

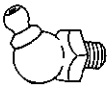

Plate 18-17

Length	Diameter & Thread	Part No.	Carton Qty.
7/8	1/4-28	110 309	10
1	1/4-28	110 308	10

FITTING - LUBRICATING

Straight Type

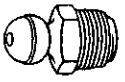

Plate 18-19

Thread & Length	Part No.	Carton Qty.
1/8 x 43/64	9411 010	10

FITTING - LUBRICATING

Straight Type C

Plate 18-21

Length	Diameter & Thread	Part No.	Carton Qty.
1/2	1/4-20	110 347	10
11/16	1/4-20	111 595	10
15/16	1/4-20	125 846	5
1-1/8	1/4-20	128 274	5

GASKET

ANNULAR, TYPE A

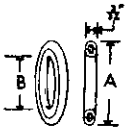

Plate 18-23

Dim. "A"	Dim. "B"	Part No.	Carton Qty.
1 1/8	.890	105 456	50

NIPPLE - PIPE

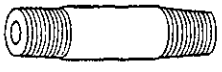

Plate 18-25

Diameter & Length	Part No.	Carton Qty.
1/4 x 1-1/2	144 596	5

FITTING - LUBRICATING

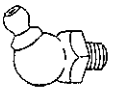

Plate 18-16

Thread & Length		Part No.	Carton Qty.
1/8 x 1-3/16	67-1/2°	109 365	5
1/8 x 1-13/16	90°	109 357	5

FITTING - LUBRICATING

Straight Drive Base

Plate 18-18

Diameter & Length	Part No.	Carton Qty.
.311 x 5/8	119 516	10

FITTING - LUBRICATING

Straight Type and Threaded Drive Type

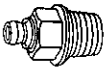

Plate 18-20

Diameter & Length	Part No.	Carton Qty.
1/8 x 23/32	9411 022	10

FITTING - LUBRICATING

Threaded Drive Type

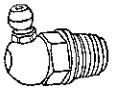

Plate 18-22

Length		Part No.	Carton Qty.
1	30°	145 434	10
47/64	85°	9411 025	10
25/32	67-1/2°	9411 024	10

GASKET

ANNULAR, TYPE C

Plate 18-24

Dim. "A"	Dim. "B"	Part No.	Carton Qty.
25/32	.561	150 189	100

NUT

Flared Tube

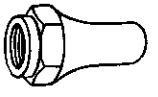

Plate 18-26

Tube Dia.	Thread	Part No.	Carton Qty.
5/16	1/2-20	118 538	5

▲ Indicates bright finish.

MyMopar.com

NUT - HEXAGON

Plate 18-27

Diameter & Thread	Part No.	Carton Qty.
3/4-16	219 758	10

NUT - HEXAGON
Lock, Thin, Semi - Finished

Plate 18-29

Diameter & Thread	Part No.	Carton Qty.
5/8-18	145 013	10

NUT - HEXAGON
Ball Sleeve Tubing

Plate 18-31

Tube Dia.	Thread	Part No.	Carton Qty.
5/16	1/2-24	114 630	10
3/4	1-28	144 409	5

NUT - HEXAGON
Slotted, Standard Semi - Finished

Plate 18-33

Diameter & Thread	Part No.	Carton Qty.
3/8-24	125 233	50
7/16-20	128 014	50
9/16-18	128 178	25
5/8-18	128 027	25

NUT - HEXAGON
Standard, Semi-Finished National Fine Thread

Plate 18-35

Diameter & Thread	Part No.	Carton Qty.
1/4-28	120 367	50
5/16-24	120 368	50
3/8-24	114 547	25
3/8-24	120 369	50
7/16-20	271 506	50
1/2-20	120 371	50
9/16-18	124 634	25

NUT - HEXAGON

Plate 18-28

Diameter & Thread	Part No.	Carton Qty.
3/4-16	426 099	10

NUT - HEXAGON
Lock, Standard, Semi - Finished

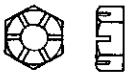

Plate 18-30

Diameter & Thread	Part No.	Carton Qty.
7/16-14	126 012	50

NUT - HEXAGON
Common

Plate 18-32

Thread & Length	Part No.	Carton Qty.
No. 8-32	120 322	100
No. 10-24	151 497	100
No. 12-24	121 743	100

NUT - HEXAGON
Standard, Semi-Finished National Coarse Thread

Plate 18-34

Diameter & Thread	Part No.	Carton Qty.
1/4-20	120 375	50
5/16-18	120 376	50
3/8-16	120 377	50
7/16-14	271 501	50
1/2-13	120 378	50
9/16-12	124 583	25
5/8-11	124 589	25

NUT
Inverted Flared Tube

Plate 18-36

Tube Dia.	Thread	Part No.	Carton Qty.
3/16	3/8-24	137 396	50
1/4	7/16-24	137 397	50
5/16	1/2-20	137 398	25
3/8	5/8-18	137 399	25

▲ - Indicates bright finish.

MyMopar.com

NUT - HEXAGON
Tri-Slot, Semi-Finished

Plate 18-37

Diameter & Thread	Part No.	Carton Qty.
3/4-16	128 180	5

PIN - DOWEL

Plate 18-39

Diameter	Length	Part No.	Carton Qty.
1/4	2-1/4	141 210	10
5/16	2-1/4	141 232	10

PIN
Straight, Grooved

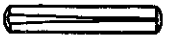

Plate 18-40

Diameter	Length	Part No.	Carton Qty.
1/4	1	142 520	10

PIN - COTTER
Split

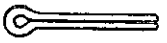

Plate 18-38

Length	Diameter	Part No.	Carton Qty.
3/4	3/32	103 373	100
1	1/16	103 363	100
1-1/8	3/32	108 636	100
1-5/8	1/8	119 209	100
1-3/4	1/8	190 381	100
1-3/4	5/32	103 399	100
3	3/16	103 415	50

PLUG - BUTTON

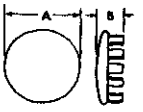

Plate 18-41

Dim. "A"	Dim. "B"	Part No.	Carton Qty.
1	19/64	142 093	10

PLUG - EXPANSION

Plate 18-42

Diameter	Part No.	Carton Qty.
5/8	103 891	25
3/4	103 892	25
13/16	105 602	25
7/8	103 893	25
15/16	117 919	25
1-1/16	117 920	10
1-1/8	106 517	10
1-3/16	140 690	10
1-3/16	117 921	10
1-1/4	179 380	10
1-3/8	117 923	10
1-1/2	103 896	10
1-5/8	117 924	10
1-5/8	140 802	10
1-3/4	103 897	10
1-7/8	114 564	10
2	140 089	10

PLUG - PIPE
Countersunk Headless

Plate 18-43

Diameter & Thread	Part No.	Carton Qty.
3/8-18	143 162	10
3/4-14	103 875	5

PLUG - PIPE
Square Head, Hollow

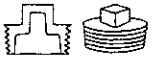

Plate 18-46

Diameter & Thread	Part No.	Carton Qty.
3/8-18	112 304	5
3/4-14	103 869	5

MyMopar.com

PLUG - PIPE
Slotted Headless

Plate 18-45

Diameter & Thread	Part No.	Carton Qty.
1/8-27	118 831	10

RING

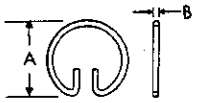

Plate 18-48

Dim. "A"	Dim. "B"	Part No.	Carton Qty.
.990	.0605	200 434	24

RIVET
Solid, Round Head

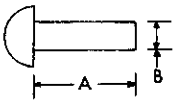

Plate 18-50

Dim. "A"	Dim. "B"	Part No.	Carton Qty.
5/8	3/16	108 682	100

RIVET - TUBULAR
Oval Head, Drilled

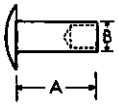

Plate 18-52

Dim. "A"	Dim. "B"	Part No.	Carton Qty.
9/64	1/4	118 140	100
3/16	3/32	131 284	100

SCREW - FILLISTER HEAD
Cross Recess, National Coarse Thread

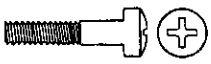

Plate 18-54

Diameter & Thread	Length	Part No.	Carton Qty.
No. 10-24	7/16	153 241	100

SCREW
Fillister Head, Slotted

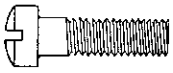

Plate 18-56

Diameter & Thread	Length	Part No.	Carton Qty.
1/4-20	2-1/2	132 300	100

PLUG - PIPE
Square Head, Solid

Plate 18-47

Diameter & Thread	Part No.	Carton Qty.
1/8-27	143 932	25
1/4-18	143 933	25

RIVET - TUBULAR
Flat Head, Countersunk

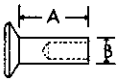

Plate 18-49

Dim. "A"	Dim. "B"	Part No.	Carton Qty.
9/32	9/64	121 573	100
13/32	3/16	114 518	100

RIVET
Split, Oval Head

Plate 18-51

Diameter	Length	Part No.	Carton Qty.
9/64	7/16	113 194	100

SCREW - TAPPING
Cross Recess, National Coarse Thread

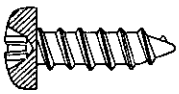

Plate 18-53

Diameter & Thread	Length	Part No.	Carton Qty.
No. 14-10	3/4	162 077	100

SCREW - FILLISTER HEAD
Cross Recess, National Fine Thread

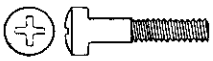

Plate 18-55

Diameter & Thread	Length	Part No.	Carton Qty.
No. 10-32	1/2	153 421	100
	1-1/2	153 479	50

▲ - Indicates bright finish.

MyMopar.com

SCREW - FLAT HEAD

Cross Recess, National Coarse Thread

Plate 18-57

Length	Diameter & Thread									
	No. 6-32		No. 8-32		No. 10-24		No. 12-24		1/4-20	
	Part No.	Carton Qty.	Part No.	Carton Qty.	Part No.	Carton Qty.	Part No.	Carton Qty.	Part No.	Carton Qty.
3/16			155 864	100						
1/4	155 830	100								
1/2							156 094	100		
5/8									156 250	100
1					155 954	100				

SCREW - FLAT HEAD

Cross Recess, National Fine Thread

Plate 18-58

Length	Diameter & Thread			
	No. 10-32		5/16-24	
	Part No.	Carton Qty.	Part No.	Carton Qty.
1/2	156 009	100		
1	156 033	100	178 837	50

SCREW - OVAL HEAD

Cross Recess, National Coarse Thread

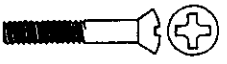

Plate 18-59

Length	Diameter & Thread									
	No. 8-32		No. 10-24		No. 12-24		1/4-20		5/16-18	
	Part No.	Carton Qty.	Part No.	Carton Qty.	Part No.	Carton Qty.	Part No.	Carton Qty.	Part No.	Carton Qty.
7/16			156 960	100						
1/2	156 771	50	156 963	100	157 277	100	157 391	100		
5/8	147 762	50	148 109	100						
3/4	186 575	100					157 402	100		
1										
1-1/2	156 831	50								

SCREW - ROUND HEAD

Cross Recess, National Coarse Thread

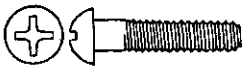

Plate 18-61

Length	Diameter & Thread											
	No. 4-40		No. 6-32		No. 8-32		No. 10-24		No. 12-24		1/4-20	
	Part No.	Carton Qty.	Part No.	Carton Qty.	Part No.	Carton Qty.	Part No.	Carton Qty.	Part No.	Carton Qty.	Part No.	Carton Qty.
1/4	154 921	100	154 959	100								
5/16					155 028	100						
1/2			154 987	100	155 043	100	155 113	100				
3/4									155 278	100	155 348	100
1					188 764	25						

MyMopar.com

SCREW - ROUND HEAD
Cross Recess, National Fine Thread

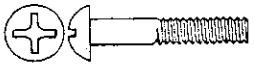

Plate 18-62

Diameter & Thread	Length	Part No.	Carton Qty.
No. 10-32	5/16	155 178	100
No. 10-32	1/2	155 194	100

STUD

Plate 18-64

Stud End Dia. & Thread	Nut End Dia. & Thread	Length	Part No.	Ctn. Qty.
3/8-16	3/8-24	3-5/16	103 203	5
3/8-16	3/8-24	5-13/16	111 647	5

WASHER - LOCK

Plate 18-66

Bolt Size	Part No.	Carton Qty.
1/4	120 380	100
5/16	120 214	100
3/8	120 382	100
1/2	120 384	100
9/16	120 898	50
5/8	121 574	50

WASHER - LOCK
External Teeth

Plate 18-68

Bolt Size	Part No.	Carton Qty.
1/4	121 753	100
5/16	138 485	100
3/8	138 489	100
7/16	136 857	50
1/2	135 629	100
9/16	138 498	50
5/8	138 502	50

SLEEVE
Ball Sleeve Tubing

Plate 18-63

Diameter	Part No.	Carton Qty.
5/16	114 631	25
3/8	114 624	25
3/4	125 654	25

WASHER - LOCK
Countersunk, External Tooth

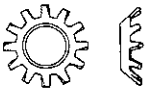

Plate 18-65

Bolt Size	I. D.	Part No.	Carton Qty.
3/8	.398	138 617	100

WASHER - LOCK
External and Internal Teeth

Plate 18-67

Bolt Size	Part No.	Carton Qty.
1/4	174 916	50
5/16	178 532	50
7/16	178 571	50
9/16	178 612	25

WASHER - PLAIN
Small

Plate 18-70

Bolt Size	Part No.	Carton Qty.
1/4	120 392	100
5/16	120 387	100
3/8	120 394	100
7/16	120 395	100
1/2	120 396	50
9/16	121 458	50
5/8	131 016	50

WASHER - PLAIN
Large

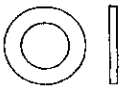

Plate 18-69

Bolt Size	Part No.	Carton Qty.
1/4	147 697	100
5/16	120 387	100
3/8	128 051	50
1/2	126 335	50

▲ - Indicates bright finish.

MyMopar.com

GROUP 19 - STEERING

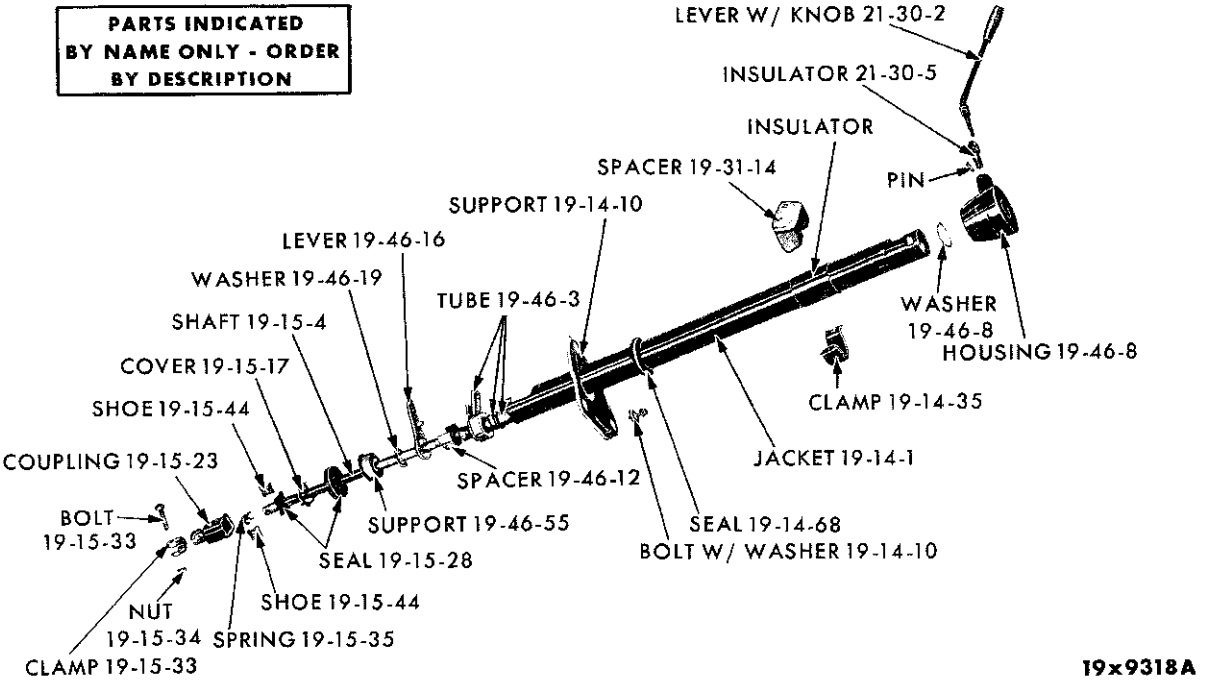

STEERING GEAR CONTROLS - PLYMOUTH SP1-2, DODGE SD1-2, VALIANT SV1 AND LANCER SL1

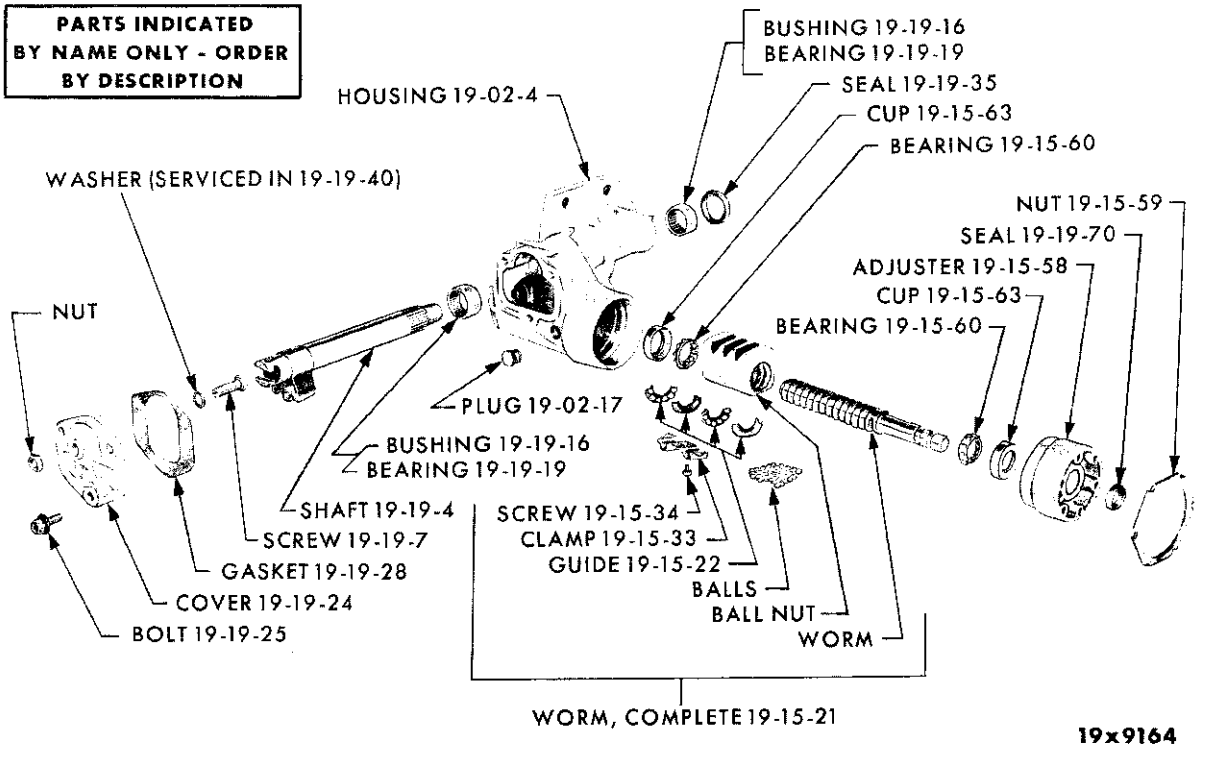

MANUAL STEERING GEAR - PLYMOUTH SP1-2, DODGE SD1-2, VALIANT SV1 AND LANCER SL1

MyMopar.com

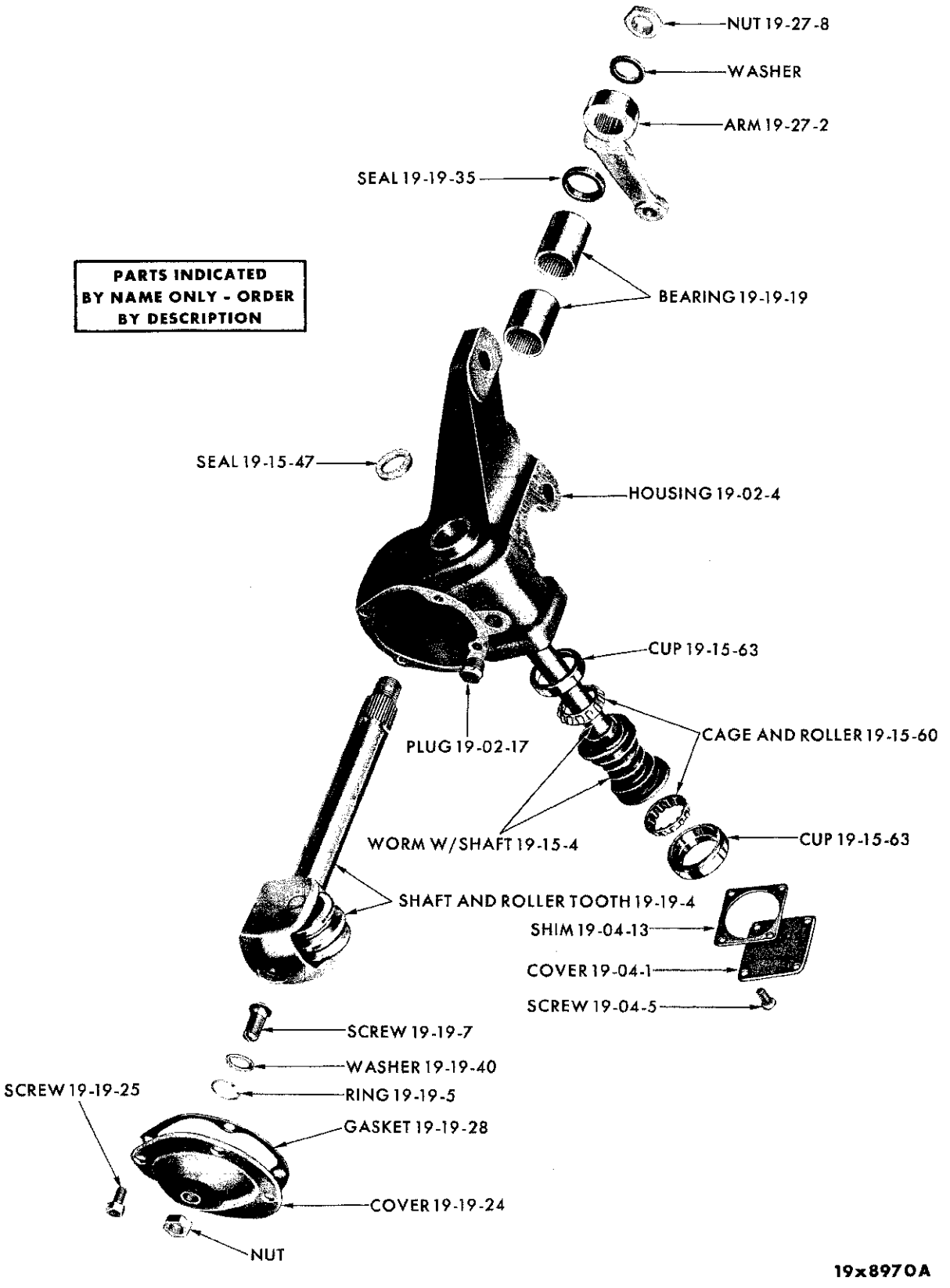

MANUAL STEERING GEAR - DODGE SD3 AND CHRYSLER SC1

MyMopar.com

CODE	PART NAME AND DESCRIPTION	PER CAR	VALIANT LANCER	PLYMOUTH DODGE	CHRYSLER IMPERIAL

NOTES

MyMopar.com

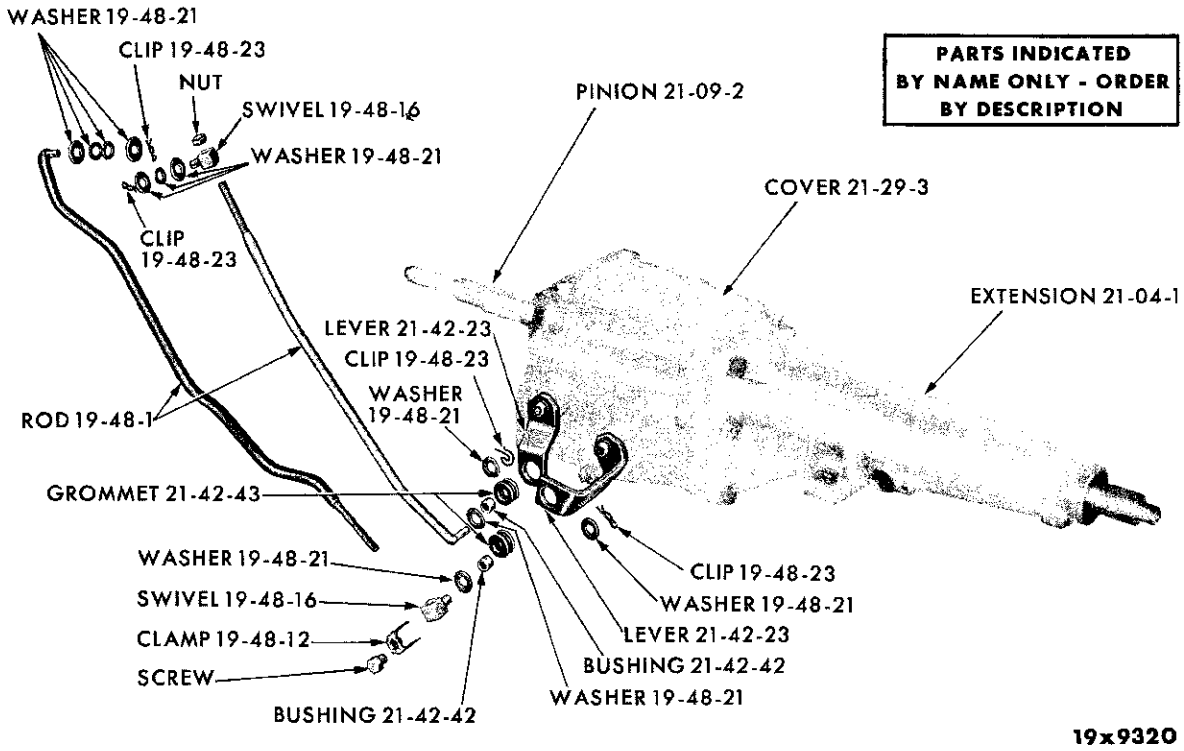

GEARSHIFT CONTROLS - VALIANT SV1 AND LANCER SL1

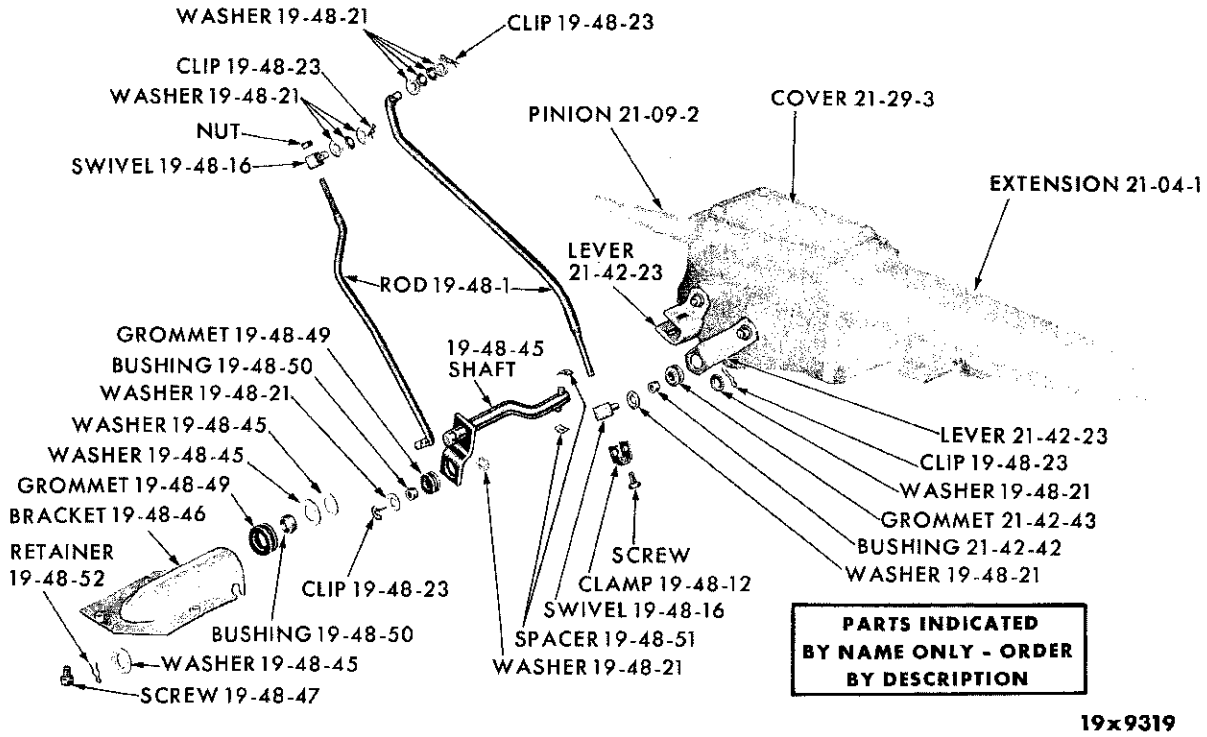

GEARSHIFT (STANDARD TRANSMISSION) - PLYMOUTH SP1-2 AND DODGE SD1-2

MyMopar.com

NOTES

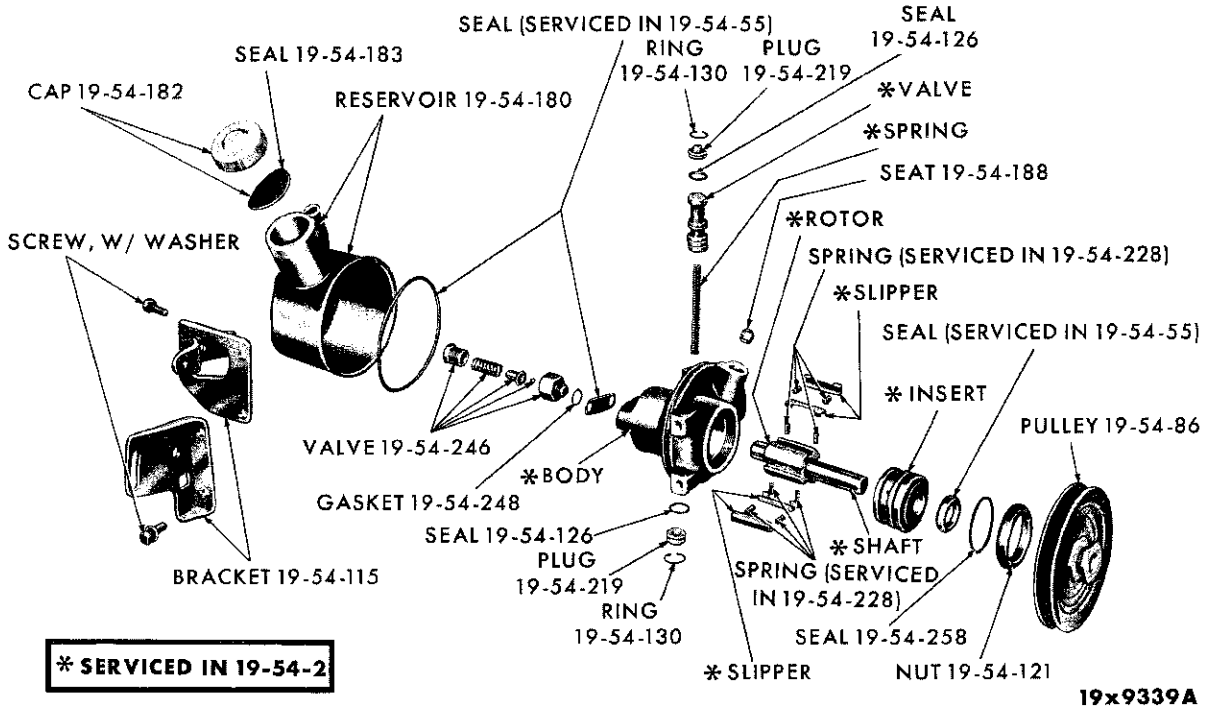

POWER STEERING PUMP

MyMopar.com

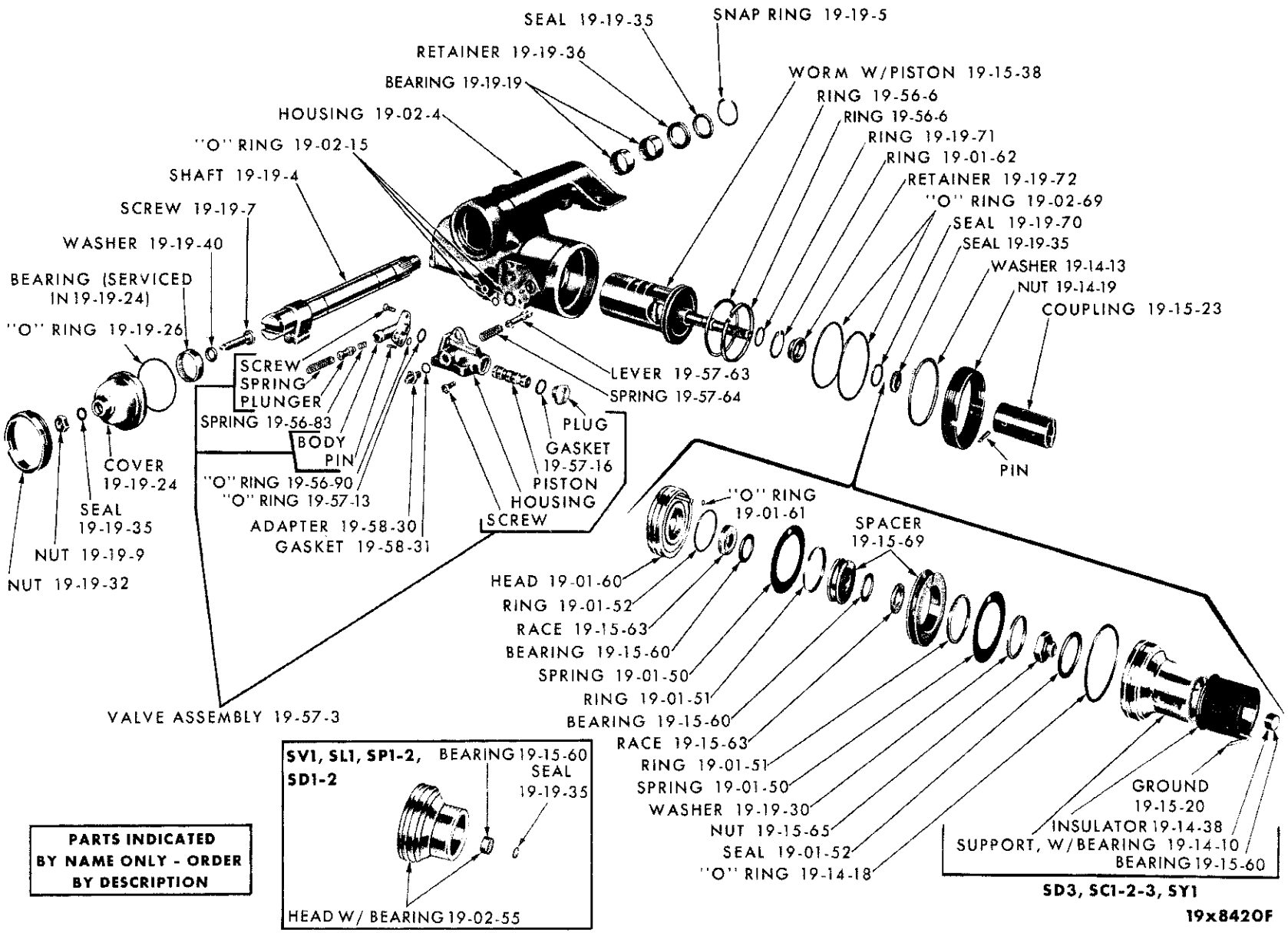

POWER STEERING GEAR

MyMopar.com

CODE	PART NAME AND DESCRIPTION	CYL.	PER CAR	VALIANT LANCER	PLYMOUTH DODGE	CHRYSLER IMPERIAL
	STANDARD STEERING					
19-01-0	**STEERING GEAR ASSEMBLY**					
19-01-3	OVERHAUL PACKAGE, except SD3		1	*2279 955	*2279 954	
	SD3, SC1	8	1	---- ---	*2196 995	*2196 995
19-01-8	CHUCK, except SD3		1	*2267 160	*2267 160	
	SD3, SC1	8	1	---- ---	*2201 622	*2201 622
19-01-12	BOLT, Housing to Frame, 4 1/2" x 7/16", SD3, SC1	8	2	---- ---	*2201 621	*2201 621
	4 5/8" x 7/16", SD3, SC1	8	2	---- ---	*2201 620	*2201 620
19-01-24	SPACER, Frame Bolt, SD3, SC1	8	1	---- ---	*1733 218	*1733 218
19-02-0	**STEERING GEAR HOUSING**					
19-02-4	HOUSING, except SD3		1	*2127 099	*2127 099	
	SD3, SC1	8	1	---- ---	*2200 719	*2200 719
19-02-17	PLUG, Filler, SC1		1	1673 974	1673 974	1673 974
19-02-18	WASHER, Housing to Frame Bolt Plain, SD3, SC1	8	1	---- ---	* 562 704	* 562 704
	To Bracket Bolt Coned, except SD3		3	*1531 725	*1531 725	
19-04-0	**STEERING GEAR HOUSING COVER**					
19-04-1	COVER, SD3, SC1	8	1	---- ---	*2201 237	*2201 237
19-04-5	SCREW, Cover, SD3, SC1	8	4	---- ---	*1134 479	*1134 479
19-04-13	SHIM, .003" thk., SD3, SC1	8	★	---- ---	*1123 313	*1123 313
	.006" thk., SD3, SC1	8	★	---- ---	* 620 180	* 620 180
	.011" thk., SD3, SC1	8	★	---- ---	* 620 181	* 620 181
	.0275" thk., SD3, SC1	8	★	---- ---	*1856 992	*1856 992
19-14-0	**STEERING GEAR COLUMN JACKET**					
19-14-1	JACKET, w/Auto. Trans., except SD3		1	*2265 621	*2265 621	
	w/Std. Trans., except SD3		1	*2265 670	*2265 670	
	SD3, SC1	8	1	---- ---	*2123 668	*2201 232
19-14-4	BEARING, except SD3		1	*2265 656	*2265 656	
	SD3, SC1	8	1	---- ---	*1828 911	*1828 911
19-14-5	SPRING, Bearing, SD3, SC1	8	1	---- ---	*1828 566	*1828 566
19-14-6	WASHER, Bearing, SD3, SC1	8	1	---- ---	*2260 099	*2260 099
19-14-10	SUPPORT, except SD3		1	*2265 664	*2265 693	
	BOLT, w/WASHER, Support Plate, except SD3		4	*6022 339	*6022 339	
	STUD, Support Plate, except SD3		1	---- ---	*6022 016	
19-14-15	SPACER, Bearing, SD3, SC1	8	1	---- ---	*1316 772	*1316 772
19-14-16	SNAP RING, Bearing, SD3, SC1	8	2	---- ---	*1944 011	*1944 011
	Upper, except SD3		1	*6023 044	*6023 044	
	Lower, except SD3		1	*6023 045	*6023 045	
19-14-21	HOUSING, Shaft Bearing, except SD3		1	*2265 652	*2265 652	
	BOLT, except SD3		3	*6023 036	*6023 036	
19-14-23	PLATE, Shaft Bearing Retainer, except SD3		1	*2265 654	*2265 654	
	SCREW, except SD3		3	*6023 088	*6023 088	

★ Indicates use as required. Numerals in parentheses ( ) refer to notes. Printed in U.S.A.
⊟ Indicates parts not listed in any previous parts book. Prices and specifications subject to change without notice.
* Indicates change or addition.

May 1, 1962 Supersedes Sept. 15, 1961.

MyMopar.com

STANDARD STEERING

CODE	PART NAME AND DESCRIPTION	CYL.	PER CAR	VALIANT LANCER	PLYMOUTH DODGE	CHRYSLER IMPERIAL
19-14-0	**STEERING GEAR COLUMN JACKET - Cont'd**					
19-14-24	COVER, Bearing Housing, w/Auto. Trans., except SD3		1	*2265 622	*2265 622	
19-14-29	STRUT, Column to Windshield Lower Frame Support	6	1	2292 366		
19-14-35	CLAMP, Column, except SD3		1	*2162 858	*2162 191	
	Jacket, SD3, SC1		1	---- ---	*2201 272	*2201 272
	To Support Strut	6	1	2292 367		
	SCREW, w/WASHER, Column Clamp		2	---- ---	*6022 245	
19-14-38	INSULATOR, Column Shaft Bearing, except SD3		1	*2265 658	*2265 658	
	Column, SD3	8	1	---- ---	*1602 951	
19-14-42	BUSHING, Jacket, SD3, SC1	8	2	---- ---	*2201 624	*2201 624
19-14-68	SEAL, Jacket, except SD3		1	*2265 697	*2265 697	
	SD3, SC1	8	1	---- ---	*2201 234	*2201 234
19-14-72	SCREW, w/WASHER, to Floor, SC1	8	6	---- ---	---- ---	6008 218
19-15-0	**STEERING GEAR TUBE AND COUPLING**					
19-15-4	SHAFT, w/PIN, except SD3		1	*2266 683	*2266 681	
	TUBE, w/HUB, SD3, SC1	8	1	---- ---	*2200 748	*2200 749
	TUBE, SD3	8	1	---- ---	*2200 748	
	WORM, w/Ball NUT, Complete, except SD3		1	*2267 139	*2267 139	
	WORM, w/SHAFT, SD3, SC1	8	1	---- ---	*2127 017	*2127 017
19-15-12	GROMMET, Tube, SD3, SC1	8	1	---- ---	*1403 226	*1403 226
19-15-17	COVER, Column Shaft Coupling, except SD3		1	*2266 708	*2266 708	
19-15-20	HORN GROUND, Coupling, SD3, SC1		1	---- ---	*2207 843	*2207 843
19-15-21	WORM, w/Ball NUT, Complete, except SD3		1	*2267 139	*2267 139	
19-15-23	COUPLING, w/PLUG, Shaft, except SD3		1	*2266 685	*2266 685	
19-15-28	SEAL, Shaft, except SD3		1	*2266 738	*2266 738	
	Shaft Coupling, except SD3		1	*2266 707	*2266 707	
19-15-30	NUT, Coupling Clamp Bolt, except SD3		1	*6023 022	*6023 022	
	Shaft Coupling, except SD3		1	*6023 022	*6023 022	
19-15-33	CLAMP, Shaft Coupling, except SD3		1	*2265 613	*2265 613	
	BOLT, Clamp, except SD3		1	*6023 246	*6023 246	
19-15-35	SPRING, Shaft Coupling, except SD3		1	*2266 737	*2266 737	
19-15-44	SHOE, Shaft Coupling, except SD3		2	*2266 736	*2266 736	
19-15-47	OIL SEAL, Worm Shaft, SD3, SC1	8	1	---- ---	*2200 730	*2200 730
19-15-48	HUB, Worm Shaft, SD3, SC1	8	1	---- ---	*2260 484	*2260 484
19-15-58	ADJUSTER, Worm Bearing, except SD3		1	*2127 146	*2127 146	
19-15-59	NUT, Worm Shaft Adjuster Lock, except SD3		1	*2127 083	*2127 083	
19-15-60	BEARING, Worm Thrust, except SD3		2	*2072 060	*2072 060	
	CAGE and ROLLER, SD3, SC1		2	---- ---	* 640 086	* 640 086

★ Indicates use as required. Numerals in parentheses ( ) refer to notes. Printed in U.S.A.
⊟ Indicates parts not listed in any previous parts book. Prices and specifications subject to change without notice.
May 1, 1962 Supersedes Nov. 30, 1961. * Indicates change or addition.

MyMopar.com

STANDARD STEERING

CODE	PART NAME AND DESCRIPTION	CYL.	PER CAR	VALIANT LANCER	PLYMOUTH DODGE	CHRYSLER IMPERIAL
19-15-0	**STEERING GEAR TUBE AND COUPLING - Cont'd**					
19-15-63	CUP, Worm Thrust Bearing, except SD3		2	*2127 097	*2127 097	
	Lower, SD3, SC1	8	1	---- ---	* 637 539	* 637 539
	Upper, SD3, SC1	8	1	---- ---	* 376 751	* 376 751
19-15-109	DISC, Flexible Joint, SD3, SC1	8	1	---- ---	*1856 999	*1856 999
19-15-110	BOLT, Coupling, SD3, SC1	8	2	---- ---	*1857 003	*1857 003
	Drive, SD3, SC1	8	2	---- ---	*1857 001	*1857 001
19-15-111	PLATE, Flexible Joint, SD3, SC1	8	4	---- ---	*1857 004	*1857 004
19-19-0	**STEERING GEAR SHAFT AND ROLLER TOOTH ASSEMBLY**					
19-19-4	SHAFT, except SD3		1	*2127 104	*2127 104	
	w/Roller TOOTH, SD3, SC1	8	1	---- ---	*2201 612	*2201 612
19-19-5	SNAP RING, Shaft, SD3, SC1	8	1	---- ---	*2126 978	*2126 978
19-19-7	SCREW, Shaft Adjusting, except SD3		1	*2267 178	*2267 178	
	SD3, SC1	8	1	---- ---	* 682 905	* 682 905
19-19-16	BUSHING, Shaft	6	2	2267 128		
19-19-19	BEARING, Shaft, except SD3		2	---- ---	*2126 890	
	Lower, SD3, SC1	8	1	---- ---	*2123 170	*2123 170
	Upper, SD3, SC1	8	1	---- ---	*2123 169	*2123 169
19-19-24	COVER, Shaft, except SD3		1	*2267 152	*2267 152	
	SD3, SC1	8	1	---- ---	*1829 128	
19-19-25	BOLT, w/WASHER, Shaft Cover, except SD3		3	*6025 063	*6025 063	
	SCREW, SD3, SC1	8	4	---- ---	*1188 668	*1188 668
	Housing Cover, SD3	8	4	---- ---	*1134 479	*1134 479
19-19-28	GASKET, Shaft Cover, except SD3		1	*2127 108	*2127 108	
	SD3, SC1	8	1	---- ---	*1738 206	*1738 206
19-19-35	OIL SEAL, Shaft, except SD3		1	*2127 154	*2127 154	
	SD3, SC1	8	1	---- ---	*1730 985	*1730 985
19-19-40	WASHER PACKAGE, Shaft Adjusting Screw, except SD3		1	*2279 961	*2279 961	
	WASHER, Shaft Thrust, SD3, SC1	8	1	---- ---	*1329 092	*1329 092
19-19-70	SEAL, Worm Shaft, except SD3		1	*2267 156	*2267 156	
19-27-0	**STEERING GEAR ARM AND IDLER ARM**					
19-27-2	ARM, Gear, except SD3		1	*2072 573	*1858 017	
	SD3, SC1	8	1	---- ---	*1824 941	*1824 941
19-27-8	NUT, Arm, SC1		1	1392 770	1392 770	1392 770
19-27-31	ARM, Idler, except SD3		1	*2072 577	*1858 067	
	SD3, SC1	8	1	---- ---	*1734 335	*1734 335
19-27-33	BRACKET, Idler Arm, except SD3		1	⊟2401 053	⊟2401 051	
	SD3, SC1	8	1	---- ---	*1671 702	*1671 702
19-27-34	BUSHING, Idler Arm, SD3, SC1	8	1	---- ---	*1734 327	*1734 327

★ Indicates use as required. Numerals in parentheses ( ) refer to notes. Printed in U.S.A.
⊟ Indicates parts not listed in any previous parts book. Prices and specifications subject to change without notice.
* Indicates change or addition.

May 1, 1962 Supersedes Nov. 30, 1961.

MyMopar.com

STANDARD STEERING

CODE	PART NAME AND DESCRIPTION	CYL.	PER CAR	VALIANT LANCER	PLYMOUTH DODGE	CHRYSLER IMPERIAL
19-27-0	**STEERING GEAR ARM AND IDLER ARM - Cont'd**					
19-27-40	SEAL, Idler Arm End, except SD3		1	1857 748	1670 299	
	Idler Arm Bracket Stud, except SD3		1	1857 748	1670 299	
19-27-45	BOLT, Idler Arm, SD3, SC1	8	1	---- ---	1734 326	1734 326
19-27-50	LINK, Center, except SD3		1	2072 571	1858 015	
	SD3, SC1	8	1	---- ---	1673 008	1673 008
19-27-55	SEAL, Center Link, SD3, SC1	8	2	---- ---	1670 299	1670 299
19-30-0	**STEERING WHEEL**					
19-30-4	WHEEL, Black Frost, w/Horn Button	6	1	2266 206		
	Blue	6	1	2266 207		
	Cordovan	6	1	2266 212		
	Green, w/Horn Ring	6	1	2266 216		
	Red	6	1	2266 208		
	White, Service Only	6	1	2266 213		
	Alabaster, Service Only, except SD3		1	---- ---	⊟2405 011	
	Beige, SD2 Polara	8	1	---- ---	2266 719	
	Black Frost, w/o Spoke Inlay, SP1, SP2		1	---- ---	2265 341	
	Black Frost, w/Spoke Inlay, except SD3		1	---- ---	2207 880	
	Blue, w/Spoke Inlay, except SD3		1	---- ---	2260 984	
	Blue, SD3	8	1	---- ---	2405 003	
	Cordovan, w/Spoke Inlay, except SD3		1	---- ---	2260 986	
	Cordovan, SD3	8	1	---- ---	2405 004	
	Gray, SD3	8	1	---- ---	2201 316	
	Green, w/Spoke Inlay, except SD3		1	---- ---	2260 985	
	Red, W/Spoke Inlay, except SD3		1	---- ---	2260 987	
	Red, SD3	8	1	---- ---	2201 317	
	Black, Police Cars		1	---- ---	2265 600	
	Plastic, White Pearl and Black, except SD3		1	---- ---	2260 978	
	Plastic, White Pearl and Blue, except SD3		1	---- ---	2260 975	
	Plastic, White Pearl and Cordovan, except SD3		1	---- ---	2260 977	
	Plastic, White Pearl and Green, except SD3		1	---- ---	2260 976	
	Plastic, White Pearl and Red, except SD3		1	---- ---	2260 979	
	Rubber, Albaster, Service Only, SC1	8	1	---- ---	---- ---	⊟2405 019
	Rubber, Black Frost, SC1	8	1	---- ---	---- ---	2260 996
	Rubber, Blue, SC1	8	1	---- ---	---- ---	2260 981
	Rubber, Red, SC1	8	1	---- ---	---- ---	2260 998
	Rubber, Medium Tan, SC1	8	1	---- ---	---- ---	2260 997
	Rubber, Saddle Tan, SC1	8	1	---- ---	---- ---	2266 716
	Plastic, Alabaster, Service Only, SC1	8	1	---- ---	---- ---	⊟2405 018
	Plastic, Clear and Black Frost, SC1	8	1	---- ---	---- ---	2265 616
	Plastic, Clear and Blue, SC1	8	1	---- ---	---- ---	2265 615
	Plastic, Clear and Red, SC1	8	1	---- ---	---- ---	2265 618
	Plastic, Clear and Medium Tan, SC1	8	1	---- ---	---- ---	2265 617
	Plastic, Clear and Saddle Tan, SC1	8	1	---- ---	---- ---	2266 717
19-30-18	NUT, Wheel, except SD3		1	145 032	145 032	
	SD3, SC1	8	1	---- ---	2200 577	2200 577
19-31-0	**STEERING COLUMN BRACKET**					
19-31-1	BRACKET, Column, SD3, SC1	8	1	---- ---	1839 984	1902 223
	Column Jacket, SD3, SC1	8	1	---- ---	2260 992	2260 992
	w/NUT, to Windshield Lower Frame, except SD3		1	---- ---	2162 706	
19-31-14	SPACER, Column to Bracket, except SD3		1	---- ---	2162 530	
	Column Bracket and Reinforcement, SC1	8	2	---- ---	---- ---	2161 617

★ Indicates use as required. Numerals in parentheses ( ) refer to notes. Printed in U.S.A.
⊟ Indicates parts not listed in any previous parts book. Prices and specifications subject to change without notice.

MyMopar.com

STANDARD STEERING

CODE	PART NAME AND DESCRIPTION	CYL.	PER CAR	VALIANT LANCER	PLYMOUTH DODGE	CHRYSLER IMPERIAL
19-31-0	**STEERING COLUMN BRACKET - Cont'd**					
19-31-15	NUT, w/WASHER, Support Strut Attaching	6	1	*2076 232		
	Column Bracket, SD3, SC1	8	2	---- ---	*2076 232	*2076 232
	SPEED NUT, Bracket Attaching, SD3	8	2	---- ---	*1327 986	
19-31-19	STUD, Bracket, SC1	8	2	---- ---	---- ---	6010 043
	Column Cap Attaching, SD3	8	2	---- ---	*1901 587	
	NUT, Bracket to Lower Reinforcement Attaching, SC1	8	2	---- ---	---- ---	6012 032
	SCREW, w/WASHER, Bracket to Windshield Lower Frame		2	---- ---	6023 083	
19-31-24	CAP, Column, SD3, SC1	8	1	---- ---	*1839 685	*1839 685
	CAP, Column Bracket, SD3	8	1	---- ---	*1839 985	
19-46-0	**GEARSHIFT ROD OR TUBE**					
19-46-3	TUBE, w/Std. Trans., except SD3		1	*2265 676	*2265 676	
19-46-8	HOUSING, Gearshift, except SD3		1	*2265 650	*2265 650	
	WASHER, Spring, except SD3		1	⊟6023 046	⊟6023 046	
19-46-12	SPACER, Tube Lever, w/Std. Trans., except SD3.		1	*2265 688	*2265 688	
19-46-16	LEVER, Tube, w/Std. Trans., First and Reverse, except SD3		1	*2265 682	*2265 682	
19-46-19	WASHER, Tube Lever, w/Std. Trans., except SD3		1	*2265 687	*2265 687	
19-46-55	SUPPORT, Tube Lever, w/Std. Trans., except SD3		1	*2265 689	*2265 689	
19-48-0	**GEARSHIFT CONTROL RODS**					
	NOTE: Approximately November 24, 1961 and AFTER Engine No. 86488, the heavy duty transmission was made Standard equipment on the SP2 and SD2 Models. The heavy duty transmission can also be identified by the cast iron extension while the standard transmission has an aluminum extension.					
19-48-1	ROD, Second and High, w/Std. Trans., except SD3		1	*2266 410	*2208 154	
	First and Reverse, except SD3		1	*2208 175	*2208 153	
	Heavy Duty, First and Reverse, except SD3		1	---- ---	*2208 171	
19-48-7	SMALL PARTS PACKAGE, w/Std. Trans., except SD3.		1	*2298 507	*2298 508	
	Heavy Duty, except SD3		1	---- ---	*2298 509	
19-48-12	CLAMP, Rod, First and Reverse, except SD3		1	*2204 274	*2204 274	
19-48-16	SWIVEL, Rod, First and Reverse, except SD3		1	*2208 155	*2208 155	
	Second and High, except SD3		1	*2074 521	*2074 521	
19-48-21	WASHER, Swivel, Plain, Second and High, except SD3		2	* 631 217	* 631 217	
	First and Reverse, except SD3		★	* 631 217	* 631 217	
	Spring, except SD3		2	*6025 070	*6025 070	
	Heavy Duty, Swivel, First and Reverse, except SD3		2	---- ---	*1533 190	

★ Indicates use as required. Numerals in parentheses ( ) refer to notes. Printed in U.S.A.
⊟ Indicates parts not listed in any previous parts book. Prices and specifications subject to change without notice.
* Indicates change or addition.

May 1, 1962 Supersedes Sept, 15, 1961.

MyMopar.com

STANDARD STEERING

CODE	PART NAME AND DESCRIPTION	CYL.	PER CAR	VALIANT LANCER	PLYMOUTH DODGE	CHRYSLER IMPERIAL
19-48-0	**GEARSHIFT CONTROL RODS - Cont'd**					
19-48-23	CLIP, except SD3		4	*6025 071	*6025 071	
19-48-45	SHAFT, Torque, except SD3		1	---- ---	*2208 163	
	Heavy Duty, except SD3		1	---- ---	*2208 166	
	WASHER, Spring, except SD3		1	---- ---	*6023 086	
	WASHER, Plain, except SD3		2	---- ---	*6023 085	
19-48-46	BRACKET, Torque Shaft Frame, except SD3		1	---- ---	*2208 156	
19-48-47	SCREW, Bracket, except SD3		3	---- ---	*6022 201	
19-48-49	GROMMET, Bracket, except SD3		1	---- ---	*2208 158	
	Lever, except SD3		1	---- ---	*1941 699	
19-48-50	BUSHING, Grommet, except SD3		1	---- ---	*2208 159	
	Lever Grommet, except SD3		1	---- ---	*1676 200	
19-48-51	SPACER, Torque Shaft, except SD3		2	---- ---	*2208 172	
19-48-52	RETAINER, Torque Shaft, except SD3		1	---- ---	*1671 569	

NOTES

MyMopar.com

POWER STEERING

CODE	PART NAME AND DESCRIPTION	CYL.	PER CAR	VALIANT LANCER	PLYMOUTH DODGE	CHRYSLER IMPERIAL
19-01-0	**STEERING GEAR ASSEMBLY**					
19-01-4	"O" RING and SEAL PACKAGE, except SD3		1	*2279 995	*2279 995	
	SD3, SC1, SC2, SC3	8	1	---- ---	*2084 839	*2084 839
	SY1	8	1	---- ---	---- ---	2084 840
19-01-8	CHUCK, except SD3		1	*2127 010	*2127 010	
	SD3, SC1, SC2, SC3	8	1	---- ---	*1733 763	*1733 763
	SY1	8	1	---- ---	---- ---	2122 032
19-01-12	BOLT, Housing to Frame, SD3	8	2	---- ---	*2201 620	*2201 620
	Housing to Frame Wedge, SD3, SC1, SC2	8	1	---- ---	*2200 554	*2200 554
	SC3, SY1	8	1	---- ---	---- ---	2200 556
19-01-24	SPACER, Frame, Bolt, SD3, SC1, SC2	8	1	---- ---	*1733 218	*1733 218
19-01-50	SPRING, Reaction, SC1, SC2, SC3		2	1822 134	1822 134	1822 134
	SY1	8	2	---- ---	---- ---	1822 953
19-01-51	RING, Reaction, SC1, SC2, SC3		2	1822 150	1822 150	1822 150
	SY1	8	2	---- ---	---- ---	1733 791
19-01-52	"O" RING, Reaction, Upper, SC1, SC2, SC3		1	1822 151	1822 151	1822 151
	Upper, SY1	8	1	---- ---	---- ---	1733 593
	Lower, SC1, SC2, SC3		1	1822 149	1822 149	1822 149
	Lower, SY1	8	1	---- ---	---- ---	1823 091
19-01-60	HEAD, Cylinder, SC1, SC2, SC3		1	1823 157	1823 157	1823 157
	SY1	8	1	---- ---	---- ---	1823 161
19-01-61	"O" RING, Cylinder Head Ferrule		1	1486 205	1486 205	1486 205
19-01-62	SNAP RING, Cylinder Head		1	1822 321	1822 321	1822 321
19-02-0	**STEERING GEAR HOUSING**					
19-02-4	HOUSING, except SD3		1	*2127 012	*2127 012	
	HOUSING PACKAGE, SD3	8	1	---- ---	*2240 602	*2240 602
19-02-13	BOLT, to Frame Wedge, SC3, SY1	8	1	---- ---	---- ---	2200 556
	SC2	8	1	---- ---	---- ---	2200 554
19-02-15	"O" RING, Housing		1	1823 150	1823 150	1823 150
	Port		2	1556 385	1556 385	1556 385
19-02-18	WASHER, Housing to Frame Bolt Plain, SD3, SC1, SC2, SC3	8	1	---- ---	* 562 704	* 562 704
	Housing to Frame Wedge Plain, SC2, SC3, SY1	8	★	---- ---	---- ---	566 170
19-02-20	SPACER, Housing to Frame, SD3	8	5	---- ---	*1671 586	*1671 586
19-02-21	WEDGE, Housing to Frame, SD3	8	1	---- ---	*1671 587	*1671 587
19-02-55	HEAD, Housing, except SD3		1	*2126 946	*2126 946	
19-02-69	"O" RING, Cylinder Head		2	1733 562	1733 562	1733 562
19-14-0	**STEERING GEAR COLUMN JACKET**					
19-14-1	JACKET, w/Std. Trans., except SD3		1	*2265 670	*2265 670	
	w/Auto. Trans., except SD3		1	*2265 621	*2265 621	
	SD3	8	1	---- ---	*2123 670	
	SC1, SC2	8	1	---- ---	---- ---	1945 782
	SC3	8	1	---- ---	---- ---	1945 777
	SY1	8	1	---- ---	---- ---	2123 730

★ Indicates use as required. Numerals in parentheses ( ) refer to notes. Printed in U.S.A.
⊟ Indicates parts not listed in any previous parts book. Prices and specifications subject to change without notice.
* Indicates change or addition.

May 1, 1962 Supersedes Sept. 15, 1961.

MyMopar.com

POWER STEERING

CODE	PART NAME AND DESCRIPTION	CYL.	PER CAR	VALIANT LANCER	PLYMOUTH DODGE	CHRYSLER IMPERIAL
19-14-0	**STEERING GEAR COLUMN JACKET - Cont'd**					
19-14-4	BEARING, except SD3		1	*2265 656	*2265 656	*1828 911
	SD3	8	1	---- ---	*1828 911	
19-14-5	SPRING, Bearing, SD3	8	1	---- ---	*1828 566	*1828 566
19-14-6	WASHER, Bearing, SD3	8	1	---- ---	*2260 099	*2260 099
19-14-10	SUPPORT, except SD3		1	*2265 664	*2265 693	
	SD3, SC1, SC2, SC3	8	1	---- ---	*1823 155	*1823 155
	SY1	8	1	---- ---	---- ---	1823 160
	BOLT, w/WASHER, Support Plate, except SD3		4	*6022 339	*6022 339	
	STUD, Support Plate, except SD3		1	---- ---	*6022 016	
19-14-13	WASHER, Support Nut		1	1733 588	1733 588	1733 588
19-14-15	SPACER, Bearing, SD3	8	1	---- ---	*1316 772	*1316 772
19-14-16	SNAP RING, Bearing, SD3	8	2	---- ---	*1944 011	*1944 011
	Upper, except SD3		1	*6023 044	*6023 044	
	Lower, except SD3		1	*6023 045	*6023 045	
19-14-18	"O" RING, Support		1	1733 602	1733 602	1733 602
19-14-19	NUT, Support		1	1733 625	1733 625	1733 625
19-14-21	HOUSING, Shaft Bearing, except SD3		1	*2265 652	*2265 652	
	BOLT, except SD3		3	*6023 036	*6023 036	
19-14-23	PLATE, Shaft Bearing Retainer, except SD3		1	*2265 654	*2265 654	
	SCREW, except SD3		3	*6023 088	*6023 088	
19-14-24	COVER, Bearing Housing, w/Auto. Trans., except SD3		1	*2265 622	*2265 622	
19-14-29	STRUT, Column to Windshield Lower Frame Support	6	1	2292 366		
19-14-35	CLAMP, Column, except SD3		1	*2162 858	*2162 191	
	SY1	8	1	---- ---	---- ---	*2161 160
	Jacket, SD3		1	---- ---	*1820 385	*1820 385
	To Support Strut	6	1	2292 367		
	SCREW, w/WASHER, Column Clamp, except SD3		2	---- ---	*6022 245	
19-14-38	INSULATOR, Column Shaft Bearing, except SD3		1	*2265 658	*2265 658	
	Column Jacket, SD3		1	---- ---	*1850 547	*1850 547
	Column, SD3	8	1	---- ---	*1602 951	
19-14-68	SEAL, Jacket, except SD3		1	*2265 697	*2265 697	
19-14-72	SCREW, w/WASHER, to Floor, SC1, SC2, SC3	8	6	---- ---	---- ---	6008 218
	SY1	8	5	---- ---	---- ---	6000 160
19-15-0	**STEERING GEAR TUBE AND COUPLING**					
19-15-4	SHAFT, w/PIN, except SD3		1	*2266 684	*2266 682	
	TUBE, SD3, SC1, SC2	8	1	---- ---	*1948 688	*1948 691
	SC3	8	1	---- ---	---- ---	1948 692
	SY1	8	1	---- ---	---- ---	2123 722
19-15-10	INSULATOR, Tube, SD3	8	1	---- ---	*1822 668	*1822 668
19-15-11	INSERT, Tube Insulator, SD3	8	2	---- ---	*1822 667	*1822 667

MyMopar.com

POWER STEERING

19-15-0 STEERING GEAR TUBE AND COUPLING - Cont'd

CODE	PART NAME AND DESCRIPTION	CYL.	PER CAR	VALIANT LANCER	PLYMOUTH DODGE	CHRYSLER IMPERIAL
19-15-17	COVER, Column Shaft Coupling, except SD3 . . .		1	*2266 708	*2266 708	
19-15-20	HORN GROUND, Tube, SD3	8	1	---- ---	*1943 777	*1943 777
19-15-23	COUPLING, Shaft, except SD3		1	*2266 686	*2266 686	
	Worm, SD3	8	1	---- ---	*1850 524	*1850 524
	BOLT, except SD3		1	*6023 246	*6023 246	
19-15-28	SEAL, Shaft, except SD3		1	*2266 738	*2266 738	
	Shaft Coupling, except SD3		1	*2266 707	*2266 707	
19-15-30	NUT, Shaft Coupling, except SD3		1	*6023 022	*6023 022	
19-15-33	CLAMP, Shaft Coupling, except SD3		1	*2266 687	*2266 687	
19-15-35	SPRING, Shaft Coupling, except SD3		1	*2266 737	*2266 737	
19-15-38	WORM, w/PISTON, except SD3		1	*2072 031	*2072 031	*1822 736
	SD3	8	1	---- ---	*1822 736	
19-15-39	SPRING PACKAGE, Ball Guide		1	2084 215	2084 215	2084 215
19-15-44	SHOE, Shaft Coupling, except SD3		2	*2266 736	*2266 736	
19-15-60	BEARING, Thrust.		2	1822 158	1822 158	1822 158
	Worm		1	1733 594	1733 594	1733 594
19-15-63	RACE, Thrust Bearing Inner.		1	1856 292	1856 292	1856 292
	Outer.		1	1822 156	1822 156	1822 156
19-15-65	NUT, Thrust Bearing		1	1822 157	1822 157	1822 157
19-15-69	SPACER, w/Center Race		1	1822 390	1822 390	1822 390

19-19-0 STEERING GEAR SHAFT AND ROLLER TOOTH ASSEMBLY

CODE	PART NAME AND DESCRIPTION	CYL.	PER CAR	VALIANT LANCER	PLYMOUTH DODGE	CHRYSLER IMPERIAL
19-19-1	SEAL PACKAGE, Cross Shaft Cover		1	2279 986	2279 986	2279 986
19-19-4	SHAFT, except SD3		1	*2127 117	*2127 117	*1733 577
	SD3	8	1	---- ---	*1733 577	
19-19-5	SNAP RING, Shaft Oil Seal, except SD3		1	*2126 966	*2126 966	*2127 049
	SD3	8	1	---- ---	*2127 049	
19-19-7	SCREW, Shaft Adjusting		1	2267 173	2267 173	2267 173
19-19-9	NUT, Adjusting Screw		1	1822 204	1822 204	1822 204
19-19-19	BEARING, Shaft, except SD3		2	*2126 890	*2126 890	*1734 078
	SD3	8	2	---- ---	*1734 078	
19-19-24	COVER, Shaft		1	1733 604	1733 604	1733 604
19-19-26	"O" RING, Shaft Cover		1	1733 615	1733 615	1733 615
19-19-30	WASHER, Reaction Seal Upper.		1	1733 790	1733 790	1733 790
19-19-32	NUT, Shaft Cover.		1	1733 627	1733 627	1733 627
19-19-35	OIL SEAL, Shaft, except SD3		1	*2126 956	*2126 956	*1730 985
	SD3	8	1	---- ---	*1730 985	
	SEAL, Adjusting Screw.		1	1822 203	1822 203	1822 203
	Worm Shaft Upper		1	2267 129	2267 129	2267 129
19-19-36	RETAINER, Shaft Oil Seal, except SD3.		1	*2126 965	*2126 965	*1670 356
	SD3	8	1	---- ---	*1670 356	

★ Indicates use as required. Numerals in parentheses ( ) refer to notes. Printed in U.S.A.
⊟ Indicates parts not listed in any previous parts book. Prices and specifications subject to change without notice.
* Indicates change or addition.

May 1, 1962 Supersedes Sept. 15, 1961.

MyMopar.com

POWERSTEERING

19-19-0 STEERING GEAR SHAFT AND ROLLER TOOTH ASSEMBLY - Cont'd

CODE	PART NAME AND DESCRIPTION	CYL.	PER CAR	VALIANT LANCER	PLYMOUTH DODGE	CHRYSLER IMPERIAL
19-19-40	WASHER, Adjusting Screw Thrust		1	1675 271	1675 271	1675 271
19-19-70	SEAL, Worm Sleeve		1	1822 324	1822 324	1822 324
19-19-71	RING, Worm Sealing		1	1822 406	1822 406	1822 406
19-19-72	SLEEVE, Worm		1	1822 320	1822 320	1822 320

19-27-0 STEERING GEAR ARM AND IDLER ARM

CODE	PART NAME AND DESCRIPTION	CYL.	PER CAR	VALIANT LANCER	PLYMOUTH DODGE	CHRYSLER IMPERIAL
19-27-2	ARM, Gear, except SD3		1	2072 573	1858 017	
	SD3, SC1, SC2	8	1	---- ---	1731 414	1731 414
	SC3, SY1	8	1	---- ---	---- ---	1731 415
19-27-8	NUT, Arm		1	1392 770	1392 770	1392 770
19-27-31	ARM, Idler, except SD3		1	2072 577	1858 067	
	SD3, SC1, SC2	8	1	---- ---	1734 335	1734 335
	SD3, SC1, SC2 used with Frame Part No. 2401 047, Part Type Code 13-01-1	8	1	---- ---	*2208 080	*2208 080
	SC3, SY1	8	1	---- ---	---- ---	1734 330
19-27-33	BRACKET, Idler Arm, except SD3		1	*2401 053	*2401 051	*1671 702
	SD3	8	1	---- ---	*1671 702	
19-27-34	BUSHING, Idler Arm, SD3	8	1	---- ---	1734 327	1734 327
19-27-40	SEAL, Idler Arm Bracket Stud, except SD3		1	1857 748	1670 299	
	Idler Arm End, except SD3		1	1857 748	1670 299	
19-27-45	BOLT, Idler Arm, SD3	8	1	---- ---	1734 326	1734 326
19-27-50	LINK, Center, except SD3		1	2072 571	1858 015	
	SD3, SC1, SC2	8	1	---- ---	1673 008	1673 008
	SC3, SY1	8	1	---- ---	---- ---	1672 980
19-27-55	SEAL, Center Link, SD3	8	2	---- ---	1670 299	1670 299

19-30-0 STEERING WHEEL

CODE	PART NAME AND DESCRIPTION	CYL.	PER CAR	VALIANT LANCER	PLYMOUTH DODGE	CHRYSLER IMPERIAL
19-30-4	WHEEL, Black Frost, w/Horn Button	6	1	2266 206		
	Blue	6	1	2266 207		
	Cordovan	6	1	2266 212		
	Green, w/Horn Ring	6	1	2266 216		
	Red	6	1	2266 208		
	White, Service Only	6	1	2266 213		
	Alabaster, Service Only, except SD3		1	---- ---	⊟2405 011	
	Beige, SD2 Polara	8	1	---- ---	2266 719	
	Black Frost, w/o Spoke Inlay, SP1, SP2		1	---- ---	2265 341	
	Black Frost, w/Spoke Inlay, except SD3		1	---- ---	2207 880	
	Blue, w/Spoke Inlay, except SD3		1	---- ---	2260 984	
	Blue, SD3	8	1	---- ---	2405 003	
	Cordovan, w/Spoke Inlay, except SD3		1	---- ---	2260 986	
	Cordovan, SD3	8	1	---- ---	2405 004	
	Gray, SD3	8	1	---- ---	2201 316	
	Green, w/Spoke Inlay, except SD3		1	---- ---	2260 985	
	Red, w/Spoke Inlay, except SD3		1	---- ---	2260 987	
	Red, SD3	8	1	---- ---	2201 317	
	Black, Police Cars		1	---- ---	2265 600	
	Plastic, White Pearl and Black, except SD3		1	---- ---	2260 978	
	Plastic, White Pearl and Blue, except SD3		1	---- ---	2260 975	

MyMopar.com

POWER STEERING

CODE	PART NAME AND DESCRIPTION	CYL.	PER CAR	VALIANT LANCER	PLYMOUTH DODGE	CHRYSLER IMPERIAL
19-30-0	**STEERING WHEEL - Cont'd**					
19-30-4	WHEEL - Cont'd					
	Plastic, White Pearl and Cordovan, except SD3		1	---- ---	2260 977	
	Plastic, White Pearl and Green, except SD3		1	---- ---	2260 976	
	Plastic, White Pearl and Red, except SD3		1	---- ---	2260 979	
	Rubber, Alabaster, Service Only, SC1, SC2	8	1	---- ---	---- ---	⊟2405 019
	Rubber, Black Frost, SC1, SC2	8	1	---- ---	---- ---	2260 996
	Rubber, Blue, SC1, SC2	8	1	---- ---	---- ---	2260 981
	Rubber, Red, SC1, SC2	8	1	---- ---	---- ---	2260 998
	Rubber, Medium Tan, SC1, SC2	8	1	---- ---	---- ---	2260 997
	Rubber, Saddle Tan, SC1, SC2	8	1	---- ---	---- ---	2266 716
	Plastic, Alabaster, Service Only, SC1, SC2, SC3	8	1	---- ---	---- ---	⊟2405 018
	Plastic, Clear and Black Frost, SC1, SC2, SC3	8	1	---- ---	---- ---	2265 616
	Plastic, Clear and Blue, SC1, SC2, SC3	8	1	---- ---	---- ---	2265 615
	Plastic, Clear and Red, SC1, SC2, SC3	8	1	---- ---	---- ---	2265 618
	Plastic, Clear and Medium Tan, SC1, SC2, SC3	8	1	---- ---	---- ---	2265 617
	Plastic, Clear and Saddle Tan, SC1, SC2, SC3	8	1	---- ---	---- ---	2266 717
	Plastic, Flat, Alabaster, Service Only, SY1	8	1	---- ---	---- ---	⊟2405 013
	Plastic, Flat, Black, SY1	8	1	---- ---	---- ---	2201 306
	Plastic, Flat, Blue, SY1	8	1	---- ---	---- ---	2260 965
	Plastic, Flat, Cordovan, SY1	8	1	---- ---	---- ---	2260 967
	Plastic, Flat, Green, SY1	8	1	---- ---	---- ---	2260 966
	Plastic, Flat, Red, SY1	8	1	---- ---	---- ---	2260 969
	Plastic, Flat, Tan, SY1	8	1	---- ---	---- ---	2260 968
19-30-18	NUT, Wheel, except SD3		1	145 032	145 032	2200 577
	SD3	8	1	---- ---	2200 577	
19-31-0	**STEERING COLUMN BRACKET**					
19-31-1	BRACKET, Column, SD3, SC1, SC2	8	1	---- ---	1839 984	1902 223
	SC3	8	1	---- ---	---- ---	1902 210
	w/NUT, to Windshield Lower Frame, except SD3		1	---- ---	2162 706	
19-31-7	BRACE, to Windshield Frame Upper, SY1	8	1	---- ---	---- ---	2162 491
	Lower, SY1	8	1	---- ---	---- ---	2292 117
19-31-14	SPACER, Column to Bracket, except SD3		1	---- ---	2162 530	
	Column Bracket and Reinforcement, SC1, SC2, SC3	8	1	---- ---	---- ---	2161 617
19-31-15	NUT, w/WASHER, Support Strut Attaching	6	1	2076 232		
19-31-19	STUD, Bracket, SC1, SC2, SC3	8	2	---- ---	---- ---	6010 043
	Column Cap Attaching, SD3	8	2	---- ---	1901 587	
	NUT, Bracket to Lower Reinforcement Attaching, SC1, SC2, SC3	8	2	---- ---	---- ---	6012 032
	SCREW, w/WASHER, Bracket to Windshield Lower Frame, except SD3		2	---- ---	6023 083	
19-31-24	CAP, Column, SD3, SC1, SC2, SC3	8	1	---- ---	1839 685	1839 685
	SY1	8	1	---- ---	---- ---	2080 720
	Column Bracket, SD3	8	1	---- ---	1839 985	
19-31-38	INSULATOR, Column (specify 1 foot)	8	★	---- ---	---- ---	1242 974
19-46-0	**GEARSHIFT ROD OR TUBE**					
19-46-3	TUBE, w/Std. Trans., except SD3		1	2265 676	2265 676	
19-46-8	HOUSING, Gearshift, w/Std. Trans., except SD3		1	2265 650	2265 650	
	WASHER, Spring, except SD3		1	6023 046	6023 046	

★ Indicates use as required. Numerals in parentheses ( ) refer to notes. Printed in U.S.A.
⊟ Indicates parts not listed in any previous parts book. Prices and specifications subject to change without notice.
* Indicates change or addition.

March 8, 1963 Supersedes May 1, 1962.

MyMopar.com

POWER STEERING

CODE	PART NAME AND DESCRIPTION	CYL.	PER CAR	VALIANT LANCER	PLYMOUTH DODGE	CHRYSLER IMPERIAL
19-46-0	**GEARSHIFT ROD OR TUBE - Cont'd**					
19-46-12	SPACER, Tube Lever, w/Std. Trans., except SD3.		1	2265 688	2265 688	
19-46-16	LEVER, Tube, w/Std. Trans., First and Reverse, except SD3		1	2265 682	2265 682	
19-46-19	WASHER, Tube Lever, w/Std. Trans., except SD3		1	2265 687	2265 687	
19-46-55	SUPPORT, Tube Lever, w/Std. Trans., except SD3		1	2265 689	2265 689	
19-48-0	**GEARSHIFT CONTROL RODS**					
	NOTE: Approximately November 24, 1961 and AFTER Engine No. 86488, the heavy duty transmission was made standard equipment on the SP2 and the SD2 models. The heavy duty transmission can also be identified by the cast iron extension while the standard transmission has an aluminum extension.					
19-48-1	ROD, Second and High, w/Std. Trans., except SD3		1	2266 410	2208 154	
	First and Reverse, except SD3		1	2208 175	2208 153	
	Heavy Duty, First and Reverse, except SD3 . . .		1	---- ---	2208 171	
19-48-7	SMALL PARTS PACKAGE, w/Std. Trans., except SD3		1	2298 507	2298 508	
	Heavy Duty, except SD3		1	---- ---	2298 509	
19-48-12	CLAMP, Rod, First and Reverse, except SD3 . . .		1	2204 274	2204 274	
19-48-16	SWIVEL, Rod, First and Reverse, except SD3 . .		1	2208 155	2208 155	
	Second and High, except SD3		1	2074 521	2074 521	
19-48-21	WASHER, Swivel, Plain, Second and High, except SD3		2	631 217	631 217	
	First and Reverse, except SD3		★	631 217	631 217	
	Spring, except SD3		2	6025 070	6025 070	
	Heavy Duty, Swivel, First and Reverse, except SD3		2	---- ---	1533 190	
19-48-23	CLIP, except SD3		4	6025 071	6025 071	
19-48-45	SHAFT, Torque, except SD3		1	---- ---	2208 163	
	Heavy Duty, except SD3		1	---- ---	2208 166	
	WASHER, Spring, except SD3		1	---- ---	6023 086	
	WASHER, Plain, except SD3		2	---- ---	6023 085	
19-48-46	BRACKET, Torque Shaft Frame, except SD3 . . .		1	---- ---	2208 156	
19-48-47	SCREW, w/WASHER, Bracket, except SD3		3	---- ---	6022 201	
19-48-49	GROMMET, Bracket, except SD3		1	---- ---	2208 158	
	Lever, except SD3		1	---- ---	1941 699	
19-48-50	BUSHING, Grommet, except SD3		1	---- ---	2208 159	
	Lever Grommet, except SD3		1	---- ---	1676 200	
19-48-51	SPACER, Torque Shaft, except SD3		2	---- ---	2208 172	
19-48-52	RETAINER, Torque Shaft, except SD3		1	---- ---	1671 569	

MyMopar.com

CODE	PART NAME AND DESCRIPTION	CYL.	PER CAR	VALIANT LANCER	PLYMOUTH DODGE	CHRYSLER IMPERIAL

POWER STEERING

19-54-0	**POWER STEERING OIL PUMP**					
19-54-2	PUMP PACKAGE	6	1	2240 620	2240 620	
	SP2, SD2	8	1	---- ---	*2240 620 (1)	
	SP2, SD2	8	1	---- ---	*2196 082 (1)	
	SD3	8	1	---- ---	*2196 082	*2196 082

POWER STEERING OIL PUMP DETAIL PARTS

NOTE: Quantity 1 per vehicle unless otherwise indicated.

CODE	PART NAME	PUMP ASSEMBLIES 2240 620 SV1, SL1, SP1, SD1	2240 620 SP2, SD2	2196 082 SP2, SD2	2196 082 SD3, SC1, SC2, SC3, SY1
19-54-55	SEAL PACKAGE, Pump	2279 997	2279 997	2279 998	2279 998
19-54-60	FILTER, Pump	1851 957	1851 957	1851 957	1851 957
19-54-86	PULLEY, SV1, SL1	2202 851	---- ---	2206 193	---- ---
	SP1, SD1	2205 523	---- ---	---- ---	---- ---
	w/318 cu. in. Eng.	---- ---	*1733 488	---- ---	---- ---
	w/361 cu. in. Eng., w/o Air Conditioning	---- ---	*1826 056	---- ---	---- ---
	w/361 cu. in. Eng., w/Air Conditioning	---- ---	*1851 732	---- ---	---- ---
	w/o Air Conditioning	---- ---	---- ---	---- ---	2128 337
	w/Air Conditioning	---- ---	---- ---	---- ---	2128 338
	Pulley, Drive, see Part Type Code 7-06-1				
19-54-90	BELT, Pump, see Chart Part Type Code 7-03-1				
19-54-115	BRACKET, Pump, SV1, SL1	2129 916	---- ---	---- ---	2128 323
	SP1, SD1	2205 521	---- ---	---- ---	---- ---
	Front, w/318 cu. in. Eng.	---- ---	*1945 384		
	Front, w/361 cu. in. Eng.	---- ---	*1826 058	---- ---	---- ---
	Rear, w/318 cu. in. Eng.	---- ---	*1851 314		
	Rear, w/361 cu. in. Eng.	---- ---	*1826 057	---- ---	---- ---
	Front	---- ---	---- ---	2206 191	
	Rear	---- ---	---- ---	2206 192	
	Pump Engine, SV1, SL1	2202 846	---- ---	---- ---	---- ---
	SP1, SD1, w/o Air Conditioning	2205 519	---- ---	---- ---	---- ---
	SP1, SD1, w/Air Conditioning	2264 873	---- ---	---- ---	---- ---
	Adjusting	---- ---	---- ---	---- ---	2128 324
	Adapter, w/Air Conditioning, SV1, SL1	*1997 565			
19-54-116	SPACER, Adapter Bracket, w/Air Conditioning, SV1, SL1	*1998 587			
19-54-121	NUT, Pump Front Insert	2127 189	2127 189	2120 012	2120 012
19-54-123	BOLT, Pump Engine Bracket Swivel, SV1, SL1	2202 850	---- ---	---- ---	2128 325
	SP1, SD1	2205 522	---- ---	---- ---	---- ---
	SCREW, w/WASHER, Pump Bracket Adjusting	1945 404	---- ---	---- ---	---- ---

NOTE 1: 2240 620 and 2196 082 Pumps are being used intermittently on the SP2 and SD2 models. To identify either pump, measure the diameter of the Pump Reservoir. The reservoir on pump 2240 620 measures 4 5/8 in. dia. as compared to 5 1/8 in. dia. for the 2196 082 pump reservoir.

MyMopar.com

POWER STEERING

19-54-0 POWER STEERING OIL PUMP - Cont'd

POWER STEERING OIL PUMP DETAIL PARTS - Cont'd

NOTE: Quantity 1 per vehicle unless otherwise indicated.

CODE	PART NAME	PUMP ASSEMBLIES 2240 620 SV1, SL1 SP1, SD1	2240 620 SP2, SD2	2196 082 SP2, SD2	2196 082 SD3, SC1, SC2, SC3, SY1
19-54-126	SEAL, Flow Control Valve Bore Oil (2 per car)	2120 017	2120 017	2120 017	2120 017
19-54-130	SNAP RING, Pump Flow Control Valve	*1738 678	*1738 678	*1738 678	*1738 678
19-54-131	BUMPER, Adjusting Bracket	---- ---	---- ---	---- ---	1940 147
19-54-132	NUT, Mounting Bracket Swivel Bolt	2129 684	---- ---	---- ---	2129 684
19-54-133	PLATE, Pump Engine Bracket, w/Air Conditioning, SP1, SD1	2264 872	---- ---	---- ---	---- ---
19-54-180	RESERVOIR, w/FILLER	2127 174	2127 174	2127 196	2127 196
19-54-181	OIL SEAL, Reservoir	1732 946	1732 946	2120 018	2120 018
	SEAL, Reservoir Mounting	1738 662	1738 662	2120 019	2120 019
19-54-182	CAP, Reservoir Filler	2127 157	2127 157	2127 157	2127 157
19-54-183	SEAL, Cap	2127 159	2127 159	2127 159	2127 159
19-54-188	SEAT, Outlet Fitting Ball	1738 683	1738 683	1738 683	1738 683
19-54-219	PLUG, Flow Control Valve Bore	*2120 016	*2120 016	---- ---	---- ---
19-54-228	REPAIR PACKAGE, Slipper Spring	⊟2448 098	⊟2448 098	⊟2448 097	⊟2448 097
19-54-246	VALVE, Pressure Relief, SV1, SL1	2127 184	2127 185	2129 019	---- ---
	SP1, SD1	2127 185	---- ---	---- ---	---- ---
	SD3, SC1, SC2, SC3	---- ---	---- ---	---- ---	2121 600
	SY1	---- ---	---- ---	---- ---	1944 792
19-54-248	GASKET, Valve	1852 920	1852 920	1852 920	1852 920
19-54-258	OIL SEAL, Pump Front Insert	---- ---	---- ---	2128 275	2128 275

CODE	PART NAME AND DESCRIPTION	CYL.	PER CAR	VALIANT LANCER	PLYMOUTH DODGE	CHRYSLER IMPERIAL
19-56-0	**POWER STEERING GEAR PISTON**					
19-56-6	RING, Piston		1	1822 672	1822 672	1822 672
	"O" RING, Piston Ring		1	1822 671	1822 671	1822 671
19-56-83	SPRING, Pressure Control Valve Lower		1	1822 442	1822 442	1822 442
19-56-90	"O" RING, Pressure Control Valve		1	1536 268	1536 268	1536 268
19-57-0	**POWER STEERING GEAR VALVES**					
19-57-1	SEAL PACKAGE, Valve		1	2279 985	2279 985	2279 985

★ Indicates use as required. Numerals in parentheses ( ) refer to notes. Printed in U.S.A.
⊟ Indicates parts not listed in any previous parts book. Prices and specifications subject to change without notice.
March 8, 1963 Supersedes May 1, 1962. * Indicates change or addition.

MyMopar.com

POWER STEERING

19-57-0 POWER STEERING GEAR VALVES - Cont'd

CODE	PART NAME AND DESCRIPTION	CYL.	PER CAR	VALIANT LANCER	PLYMOUTH DODGE	CHRYSLER IMPERIAL
19-57-2	PISTON and SPRING PACKAGE, Pressure Control Valve		1	1879 509	1879 509	1879 509
19-57-3	VALVE		1	1823 148	1823 148	1823 148
19-57-13	"O" RING, Valve Housing		1	1733 612	1733 612	1733 612
19-57-16	GASKET, Valve Plug		1	1733 724	1733 724	1733 724
19-57-63	LEVER, Valve		1	1822 380	1822 380	1822 380
19-57-64	SPRING, Valve Lever		1	1823 151	1823 151	1823 151

19-58-0 POWER STEERING GEAR HOSE

CODE	PART NAME AND DESCRIPTION	CYL.	PER CAR	VALIANT LANCER	PLYMOUTH DODGE	CHRYSLER IMPERIAL
19-58-7	HOSE, Pressure, except SD3		1	*2127 211	*2127 255	*2201 764
	SD3	8	1	---- ---	*2201 764	
19-58-9	BUMPER, Pressure Hose, SP2, SD2, w/361 cu. in. Eng.	8	1	---- ---	1637 502	
19-58-14	HOSE, Return	6	1	2127 227	2200 560	
	SP2, SD2	8	1	---- ---	2267 235	
	SD3	8	1	---- ---	2200 560	2200 560
19-58-22	SLEEVE, Return Hose, w/Auto. Pilot, SC1, SC2	8	1	---- ---	---- ---	2127 280
19-58-23	SHIELD, Return Hose Heat, SP2, SD2, w/361 cu. in. Eng.	8	1	---- ---	2127 269	
19-58-25	CLAMP, Return Hose Heat Shield		2	870 469	870 469	870 469
19-58-30	ADAPTER, Pressure Hose		1	1618 610	1618 610	1618 610
19-58-31	GASKET, Adapter		1	1618 611	1618 611	1618 611

NOTES

★ Indicates use as required. Numerals in parentheses ( ) refer to notes. Printed in U.S.A.
⊟ Indicates parts not listed in any previous parts book. Prices and specifications subject to change without notice.
* Indicates change or addition.

March 8, 1963 Supersedes May 1, 1962.

MyMopar.com

CODE	PART NAME AND DESCRIPTION	CYL.	PER CAR	VALIANT LANCER	PLYMOUTH DODGE	CHRYSLER IMPERIAL

NOTES

MyMopar.com

GROUP 21 - TRANSMISSION

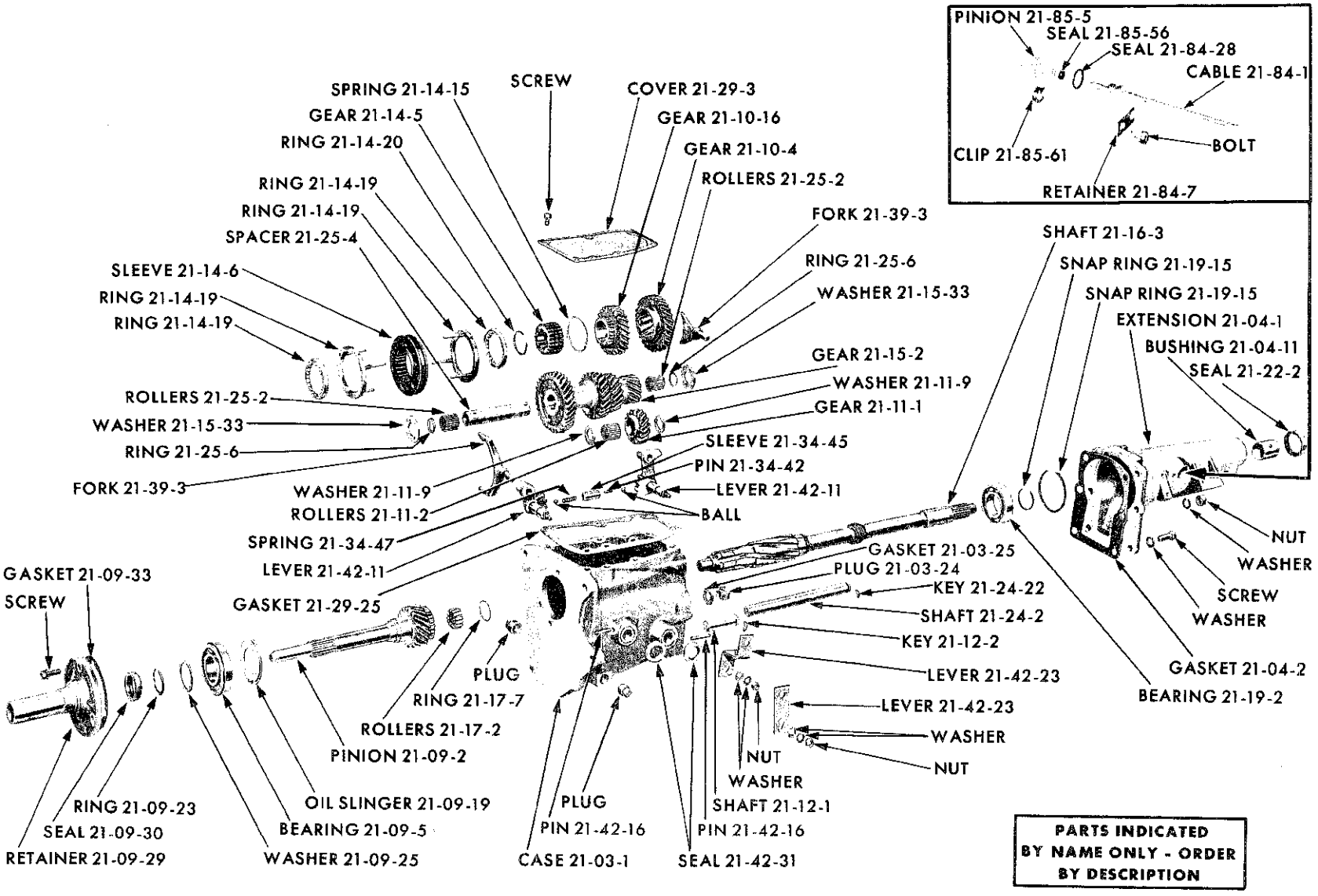

STANDARD TRANSMISSION - EXCEPT PLYMOUTH SP2 SPORT FURY, DODGE SD2 POLARA AND CHRYSLER SC1-2

MyMopar.com

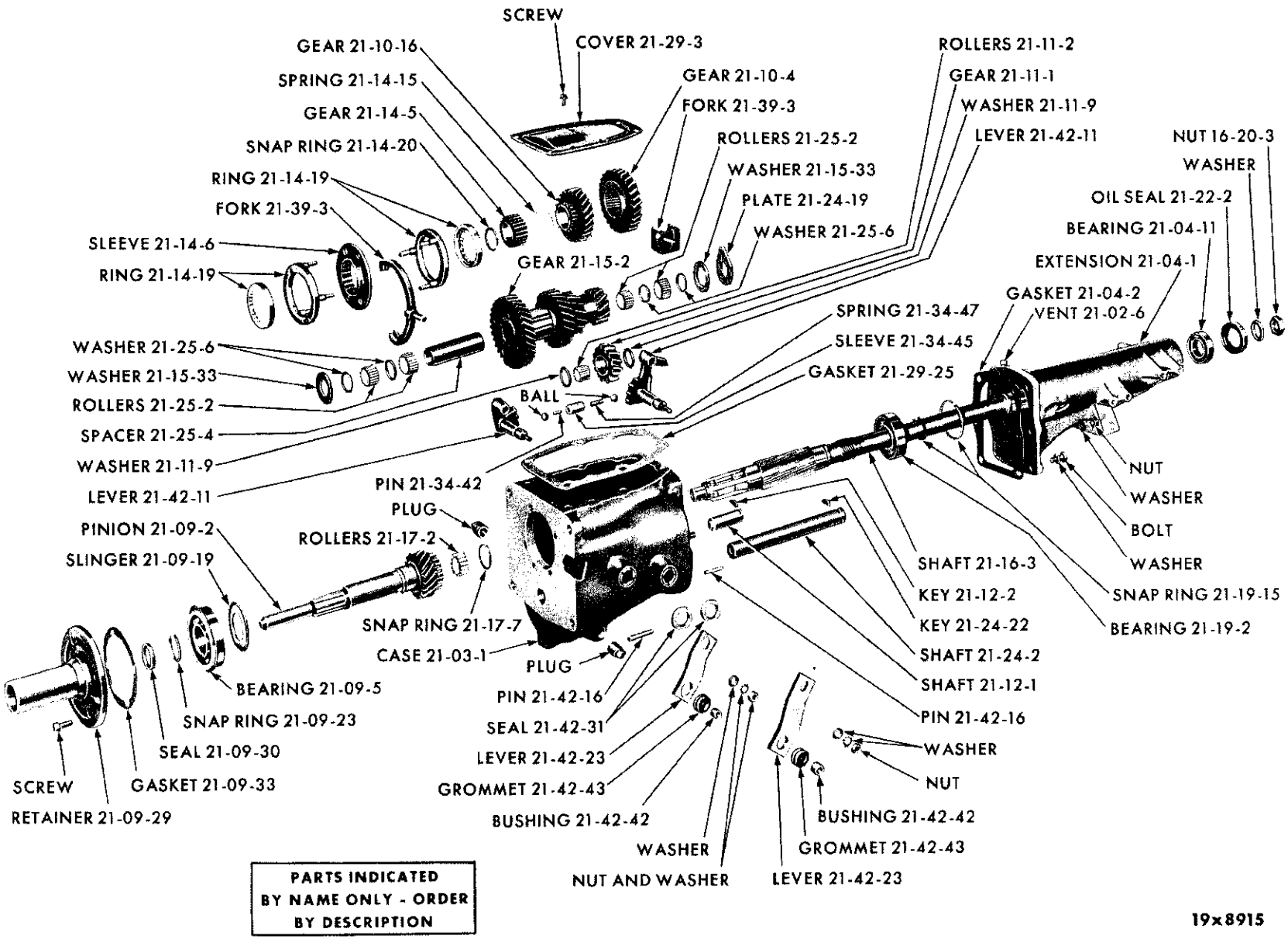

STANDARD TRANSMISSION (HEAVY DUTY) - PLYMOUTH SP1-2, DODGE SD1-2 AND CHRYSLER SC1-2

MyMopar.com

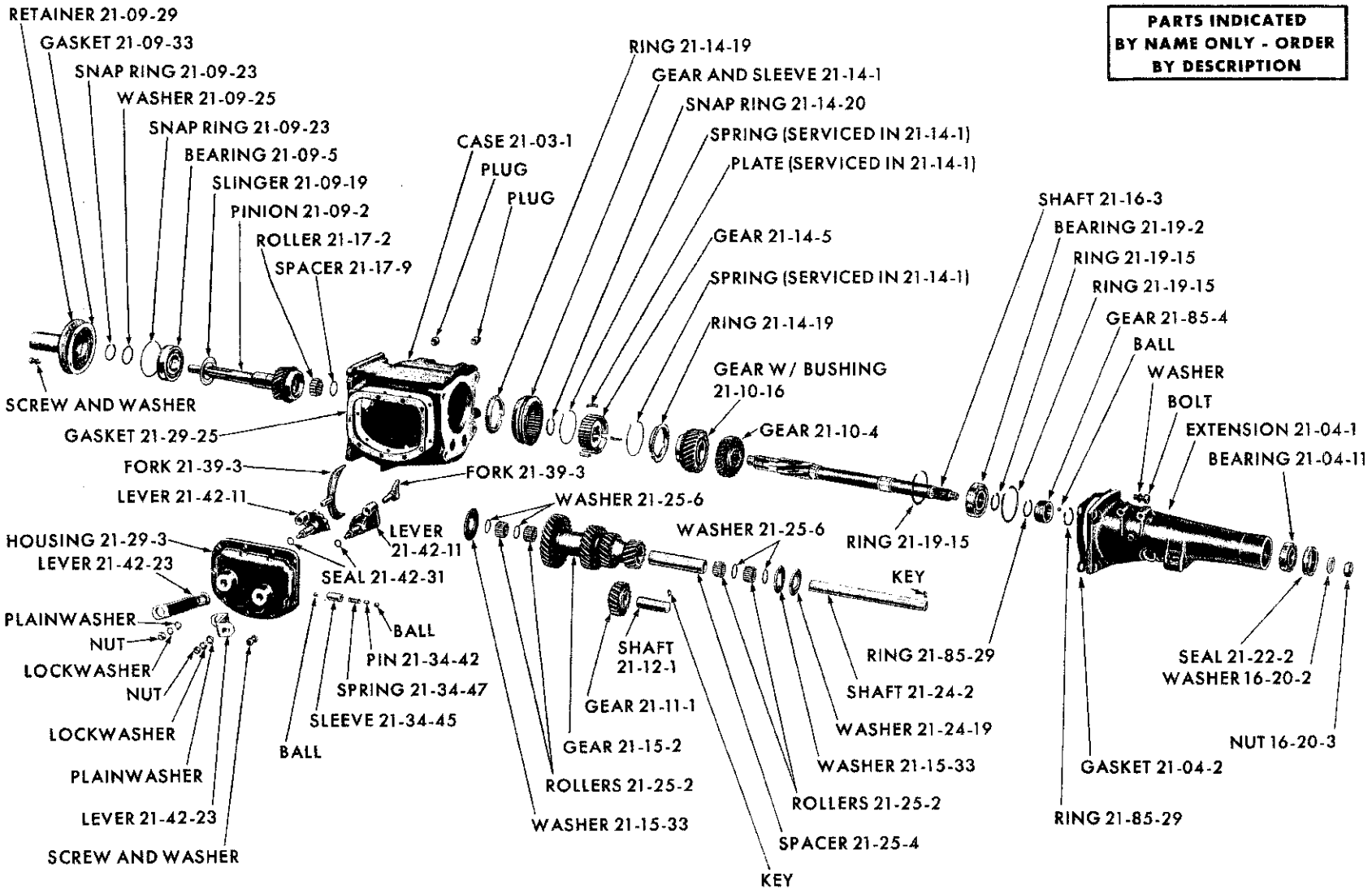

STANDARD TRANSMISSION - PLYMOUTH SP1-2 AND DODGE SD1-2 (WITH 426 CU. IN. ENGINE)

MyMopar.com

CODE	PART NAME AND DESCRIPTION	PER CAR	VALIANT LANCER	PLYMOUTH DODGE	CHRYSLER IMPERIAL

NOTES

MyMopar.com

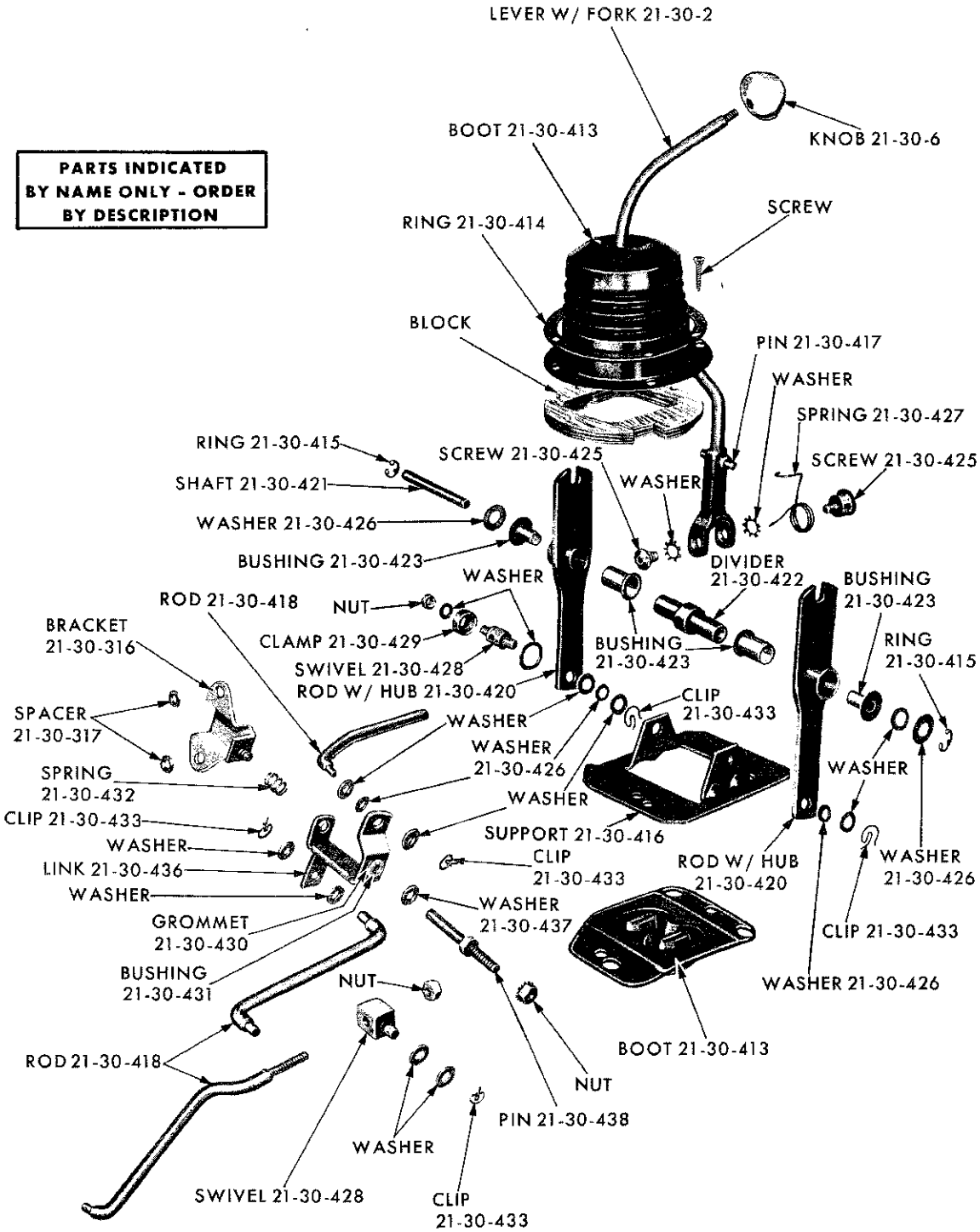
PARTS INDICATED BY NAME ONLY - ORDER BY DESCRIPTION
LEVER W/ FORK 21-30-2
KNOB 21-30-6
BOOT 21-30-413
SCREW
RING 21-30-414
BLOCK
PIN 21-30-417
WASHER
SPRING 21-30-427
SCREW 21-30-425
RING 21-30-415
SCREW 21-30-425
SHAFT 21-30-421
WASHER
WASHER 21-30-426
BUSHING 21-30-423
DIVIDER 21-30-422
WASHER
BUSHING 21-30-423
ROD 21-30-418
NUT
BRACKET 21-30-316
CLAMP 21-30-429
BUSHING 21-30-423
RING 21-30-415
SWIVEL 21-30-428
ROD W/ HUB 21-30-420
CLIP 21-30-433
SPACER 21-30-317
WASHER
WASHER 21-30-426
WASHER
SPRING 21-30-432
WASHER
CLIP 21-30-433
SUPPORT 21-30-416
WASHER
CLIP 21-30-433
ROD W/ HUB 21-30-420
WASHER 21-30-426
LINK 21-30-436
WASHER
WASHER 21-30-437
GROMMET 21-30-430
CLIP 21-30-433
BUSHING 21-30-431
NUT
WASHER 21-30-426
BOOT 21-30-413
ROD 21-30-418
NUT
PIN 21-30-438
WASHER
SWIVEL 21-30-428
CLIP 21-30-433
19x9342

MyMopar.com

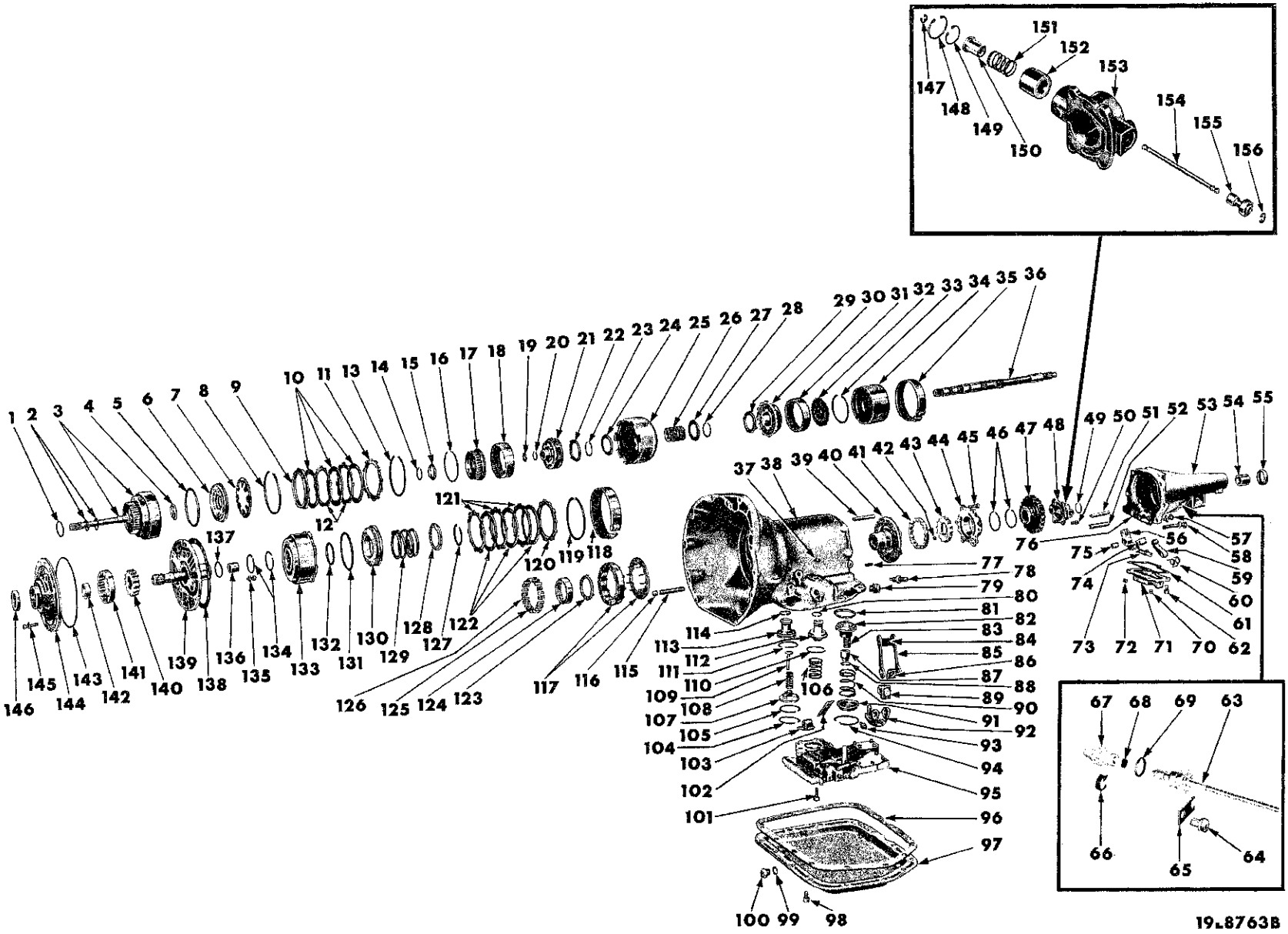

AUTOMATIC 3-SPEED TRANSMISSION - 6 CYLINDER

MyMopar.com

AUTOMATIC 3-SPEED TRANSMISSION - 6 CYLINDER

Ref. No.	Name	Part Type Code
1	Washer	21-133-65
2	Ring	21-129-7
3	Shaft, Input	21-129-5
4	Seal	21-133-17
5	Seal	21-133-17
6	Piston	21-133-15
7	Spring	21-133-20
8	Snap Ring	21-133-25
9	Plate	21-133-39
10	Disc	21-133-36
11	Plate	21-133-38
12	Plate	21-133-39
13	Snap Ring	21-133-43
14	Snap Ring	21-134-40
15	Washer	21-134-45
16	Snap Ring	21-134-40
17	Support	21-134-36
18	Gear	21-134-38
19	Washer	21-05-35
20	Snap Ring	21-05-19
21	Carrier, Front	21-134-5
22	Washer	21-133-48
23	Ring	21-133-46
24	Plate	21-133-47
25	Shell	21-133-42
26	Gear, Sun	21-133-40
27	Plate	21-133-47
28	Ring	21-133-46
29	Washer	21-133-48
30	Carrier, Rear	21-134-5
31	Gear	21-134-38
32	Support	21-134-36
33	Snap Ring	21-134-40
34	Drum, Reverse	21-136-65
35	Band, Reverse	21-136-30
36	Shaft, Output	21-05-1
37	Seal	21-139-47
38	Case	21-03-1
39	Shaft	21-136-49
40	Housing, Rear	21-118-40
41	Rotor, Outer	21-118-7
42	Ball	
43	Rotor, Inner (Serviced in 21-118-6)	
44	Cover	21-118-53
45	Screw	
46	Ring	21-138-38
47	Support	21-138-10
48	Housing (Serviced in 21-138-2)	
49	Snap Ring	21-138-7
50	Screw	
51	Shaft	4-10-8
52	Bushing	4-10-12
53	Extension	21-04-1
54	Bushing	21-04-11
55	Oil Seal	21-05-12
56	Lever	4-10-7
57	Screw	
58	Screw	
59	Sprag	4-10-10
60	Spring	4-10-11
61	Gasket	4-10-16
62	Screw	
63	Cable	21-84-1
64	Screw	
65	Retainer	21-84-7
66	Clip	21-85-61
67	Pinion	21-85-5
68	Seal	21-85-56
69	Seal	21-84-28
70	Plug	
71	Cover	4-10-15
72	Plug	
73	Adapter	4-10-2
74	Spacer	4-10-9
75	Bearing	4-10-19
76	Gasket	21-04-2
77	Pin	
78	Screw	21-136-17
79	Switch	21-113-24
80	Ring	21-137-202
81	Seal	21-137-50
82	Piston, Reverse	21-137-35
83	Spring	21-137-41
84	Anchor	21-136-41
85	Link	21-136-44
86	Strut	21-136-41
87	Plug	21-137-47
88	Snap Ring	21-137-44
89	Lever, Short	21-136-47
90	Spring	21-137-53
91	Retainer	21-137-56
92	Lever, w/Stem	21-136-47
93	Screw	21-136-52
94	Snap Ring	21-137-59
95	Body, w/Transfer Plate	21-139-4
96	Gasket	21-119-5
97	Pan	21-119-3
98	Screw	21-119-3
99	Gasket	21-119-12
100	Plug	21-119-11
101	Screw	
102	Strut	21-136-15
103	Lever	21-136-20
104	Snap Ring	21-137-19
105	Ring	21-137-8
106	Spring	21-137-205
107	Guide	21-137-13
108	Spring	21-137-22
109	Rod	21-137-11
110	Ring	21-137-202
111	Ring	21-137-8
112	Piston, Accumulator	21-137-200
113	Piston, Kickdown	21-137-5
114	Ring	21-137-8
115	Shaft	21-136-23
116	Plug	
117	Retainer and Cam	21-136-228
118	Band, Kickdown	21-136-5
119	Snap Ring	21-133-43
120	Plate	21-133-39
121	Plate	21-133-38
122	Disc	21-133-36
123	Washer	21-136-237
124	Race	21-136-232
125	Spring	21-136-236
126	Roller	21-136-235
127	Snap Ring	21-133-43
128	Retainer	21-133-22
129	Spring	21-133-20
130	Piston	21-133-15
131	Seal	21-133-17
132	Seal	21-133-17
133	Retainer, Front	21-133-7
134	Ring	21-129-13
135	Screw	
136	Bushing	21-129-23
137	Washer	21-133-65
138	Gasket	21-129-24
139	Shaft, Reacting, w/Support	21-129-10
140	Rotor, Inner (Serviced in 21-118-6)	
141	Rotor, Outer (Serviced in 21-118-6)	
142	Bushing	21-118-47
143	Oil Seal	21-118-45
144	Housing, Front	21-118-40
145	Screw	21-118-55
146	Oil Seal	21-118-42
147	Snap Ring	21-138-29
148	Snap Ring	21-138-19
149	Snap Ring	21-138-19
150	Weight	21-138-13
151	Spring	21-138-15
152	Weight	21-138-13
153	Body (Serviced in 21-138-2)	
154	Shaft	21-138-26
155	Valve	21-138-23
156	Snap Ring	21-138-29

PARTS INDICATED BY NAME ONLY - ORDER BY DESCRIPTION

MyMopar.com

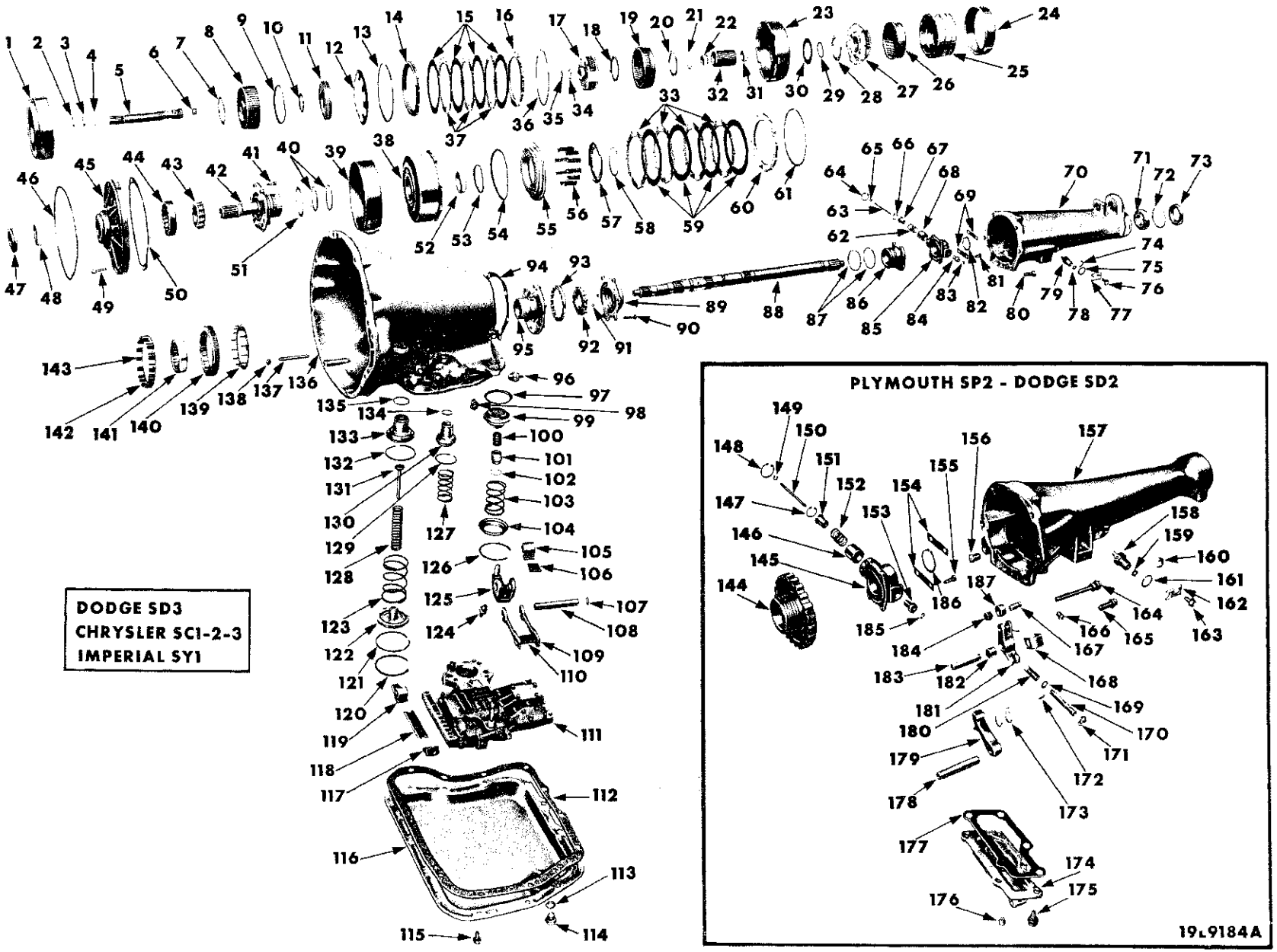

AUTOMATIC 3-SPEED TRANSMISSION - V8 CYLINDER

MyMopar.com

AUTOMATIC 3-SPEED TRANSMISSION - V8 CYLINDER

Ref. No.	Name	Part Type Code
1	Retainer	21-133-7
2	Ring	21-129-7
3	Ring	21-129-7
4	Ring	21-133-25
5	Shaft, Input	21-129-5
6	Bushing	21-129-6
7	Washer	21-133-65
8	Retainer, Piston	21-133-7
9	Seal	21-133-17
10	Seal	21-133-17
11	Piston	21-133-15
12	Spring	21-133-20
13	Ring	21-133-25
14	Plate	21-133-39
15	Disc	21-133-36
16	Plate	21-133-39
17	Carrier	21-134-5
18	Washer	21-134-30
19	Gear	21-134-38
20	Washer	21-133-48
21	Ring	21-133-46
22	Bushing (Serviced in 21-133-40)	
23	Shell	21-133-42
24	Band	21-136-30
25	Drum	21-136-65
26	Gear	21-134-38
27	Carrier	21-134-5
28	Washer	21-134-30
29	Ring	21-133-46
30	Plate	21-133-47
31	Bushing (Serviced in 21-133-40)	
32	Gear	21-133-40
33	Plate	21-133-38
34	Ring	21-05-19
35	Washer	21-05-35
36	Ring	21-133-43
37	Plate	21-133-38
38	Retainer	21-133-7
39	Band	21-136-5
40	Ring	21-129-13
41	Bolt	
42	Shaft, Reaction	21-129-10
43	Rotor (Serviced in 21-118-6)	
44	Rotor (Serviced in 21-118-6)	
45	Housing	21-118-40
46	Seal	21-118-45
47	Seal	21-118-42
48	Bushing	21-118-47
49	Bolt	21-118-49
50	Gasket	21-118-54
51	Washer	21-133-65
52	Bushing (Serviced in 21-133-7)	
53	Seal	21-133-17
54	Seal	21-133-17
55	Piston	21-133-15
56	Spring	21-133-20
57	Retainer	21-133-22
58	Ring	21-133-43
59	Disc	21-133-36
60	Plate	21-133-39
61	Ring	21-133-43
62	Spring	21-138-15
63	Shaft	21-138-26
64	Ring	21-138-19
65	Ring	21-138-29
66	Ring	21-138-19
67	Weight	21-138-13
68	Weight	21-138-13
69	Lock	21-138-21
70	Extension	21-04-1
71	Bearing	21-04-11
72	Ring	21-04-12
73	Seal	21-05-12
74	Clip	21-85-61
75	Seal	21-84-28
76	Bolt	
77	Clamp	21-84-7
78	Seal	21-85-56
79	Pinion	21-85-5
80	Bolt	
81	Bolt	
82	Ring	21-138-7
83	Ring	21-138-29
84	Valve	21-138-23
85	Housing (Serviced in 21-138-2)	
86	Support	21-138-10
87	Ring	21-138-38
88	Shaft, Output	21-05-1
89	Cover	21-118-53
90	Screw	
91	Ball	
92	Rotor (Serviced in 21-118-6)	
93	Rotor	21-118-7
94	Gasket	21-04-2
95	Housing	21-118-40
96	Switch	21-113-24
97	Seal	21-137-50
98	Screw	21-136-17
99	Piston	21-137-35
100	Spring	21-137-41
101	Plug	21-137-47
102	Ring	21-137-44
103	Spring	21-137-53
104	Retainer	21-137-56
105	Lever	21-136-47
106	Strut	21-136-41
107	Ring	21-136-55
108	Shaft	21-136-49
109	Link	21-136-44
110	Anchor	21-136-41
111	Body, w/Plate	21-139-4
112	Gasket	21-119-5
113	Gasket	21-119-12
114	Plug	21-119-11
115	Bolt	
116	Pan	21-119-3
117	Anchor	21-136-15
118	Strut	21-136-15
119	Lever	21-136-20
120	Ring	21-137-19
121	Ring	21-137-8
122	Guide	21-137-13
123	Spring	21-137-22
124	Screw	21-136-52
125	Lever	21-136-47
126	Ring	21-137-59
127	Spring	21-137-205
128	Spring	21-137-22
129	Ring	21-137-202
130	Piston	21-137-200
131	Rod	21-137-11
132	Ring	21-137-8
133	Piston	21-137-5
134	Ring	21-137-202
135	Ring	21-137-8
136	Case	21-03-1
137	Shaft	21-136-23
138	Plug	
139	Retainer	21-136-233
140	Cam	21-136-231
141	Race	21-136-232
142	Spring	21-136-236
143	Roller	21-136-235
144	Support	21-138-10
145	Body (Serviced in 21-138-2)	
146	Weight	21-138-13
147	Ring	21-138-19
148	Ring	21-138-19
149	Ring	21-138-29
150	Shaft	21-138-26
151	Weight	21-138-13
152	Spring	21-138-15
153	Valve	21-138-23
154	Lock	21-138-21
155	Bolt	
156	Plug	
157	Extension	21-04-1
158	Pinion	21-85-5
159	Seal	21-85-56
160	Clip	21-85-61
161	Seal	21-84-28
162	Retainer	21-84-7
163	Bolt	
164	Screw	
165	Screw	
166	Plug	
167	Shaft (Serviced in 4-10-7)	
168	Spacer	4-10-9
169	Washer	4-10-4
170	Adapter	4-10-2
171	Spring	4-10-3
172	Pin	
173	Spring	4-10-11
174	Cover	4-10-15
175	Screw	
176	Plug	
177	Gasket	4-10-16
178	Bushing	4-10-12
179	Sprag	4-10-10
180	Spring	4-10-3
181	Lever	4-10-7
182	Bearing (Serviced in 4-10-7)	
183	Shaft	4-10-8
184	Roller	4-10-19
185	Ring	21-138-29
186	Ring	21-138-7
187	Roller	4-10-17

PARTS INDICATED BY NAME ONLY - ORDER BY DESCRIPTION

MyMopar.com

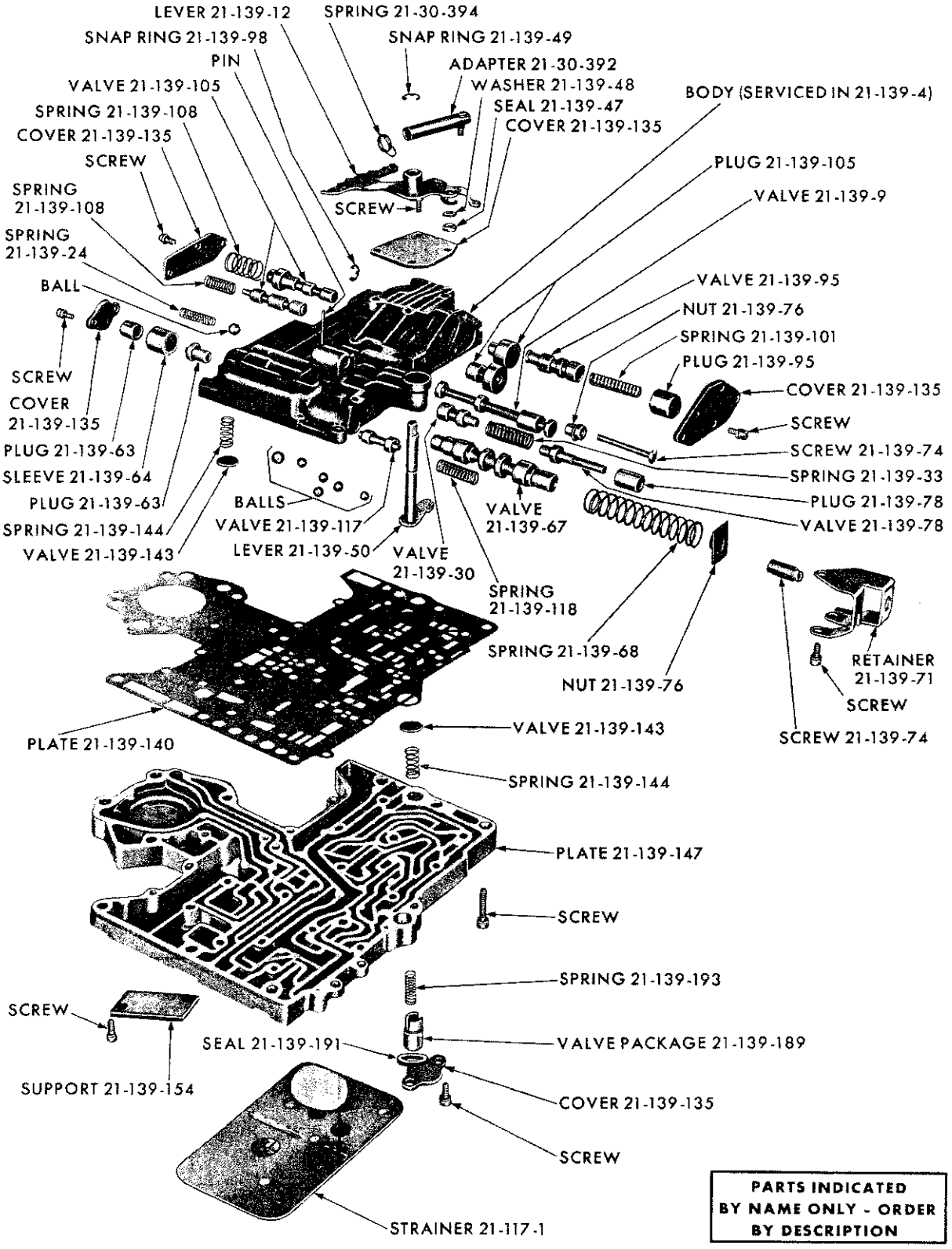

19x8761C

AUTOMATIC 3-SPEED TRANSMISSION VALVE BODY AND VALVES

MyMopar.com

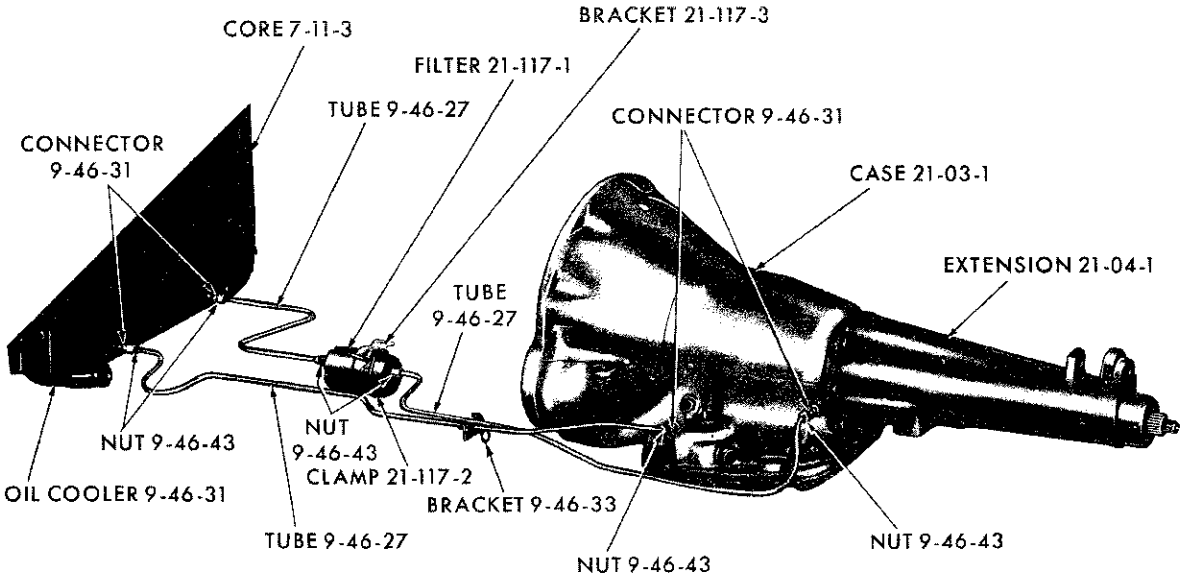

19x9340

TRANSMISSION COOLER SYSTEM

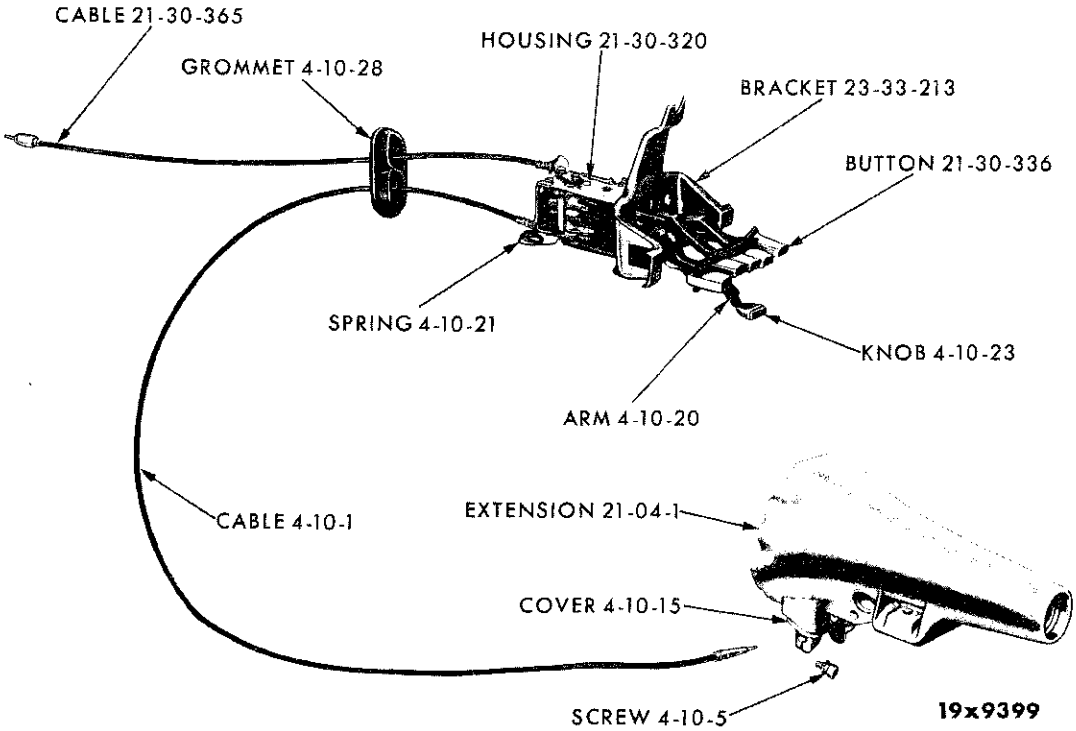

19x9399

TRANSMISSION PARKING LOCK SYSTEM

MyMopar.com

CODE	PART NAME AND DESCRIPTION	CYL.	PER CAR	VALIANT LANCER	PLYMOUTH DODGE	CHRYSLER IMPERIAL

NOTES

★ Indicates use as required.
⊟ Indicates parts not listed in any previous parts book.

Printed in U.S.A.
Prices and specifications subject to change without notice.

MyMopar.com

CODE	PART NAME AND DESCRIPTION	CYL.	PER CAR	VALIANT LANCER	PLYMOUTH DODGE	CHRYSLER IMPERIAL

STANDARD TRANSMISSION

21-01-0 TRANSMISSION SETS OR PACKAGES

NOTE: Standard Transmission listed as Heavy Duty is used on SP1, SP2, SD1, SD2, also Police Cars, Taxies and all extreme usage.
Heavy Duty Standard Transmission is also Standard Equipment on SP2 Sport Fury, SD2 Polara, SC1, SC2 w/413 cu. in. Engine w/Single 4 Barrel Carburetor and on all SP2, SD2, AFTER Engine No. 86488.
Standard Transmission has an Aluminum Extension. Heavy Duty Transmission has a Cast Iron Extension.

CODE	PART NAME AND DESCRIPTION	CYL.	PER CAR	VALIANT LANCER	PLYMOUTH DODGE	CHRYSLER IMPERIAL
21-01-3	GASKET SET		1	2196 062	2275 896 (1)	
	Heavy Duty Trans.		1	---- ---	2275 893 (2)	
	SD3, SC1, SC2	8	1	---- ---	2240 320	2240 320
21-02-0	**TRANSMISSION ASSEMBLY**					
21-02-1	TRANSMISSION	6	1	2204 883	2204 881	
	Heavy Duty Trans.	6	1	---- ---	2204 876	
	UP TO Engine No. 86488	8	1	---- ---	2204 870	
	Heavy Duty Trans.	8	1	---- ---	*2400 801 (2)	
	SD3	8	1	---- ---	2400 238	
	SP2, SD2, w/413 cu. in. Engine	8	1	---- ---	⊟2400 690	
	SC1, SC2	8	1	---- ---	---- ---	*2400 238
21-02-6	VENT, SC1, SC2		1	1139 204	1139 204	1139 204
21-03-0	**TRANSMISSION CASE**					
21-03-1	CASE, SP1, SP2, SD1, SD2		1	2205 075	2205 075 (1)	
	SP1, SP2, SD1, SD2, Heavy Duty Trans., SD3, SC1, SC2		1	---- ---	2205 077 (2)	2205 077
	SP2, SD2, w/413 cu. in. Engine	8	1	---- ---	⊟2424 271	
21-03-24	PLUG, Back-Up Light Switch Hole, SC1, SC2		1	1139 153	1139 153	1139 153
21-03-25	GASKET, Plug, SC1, SC2		1	1302 807	1302 807	1302 807
21-04-0	**TRANSMISSION CASE EXTENSION**					
21-04-1	EXTENSION, SP1, SP2, SD1, SD2		1	2125 145	1949 367 (1)	
	Heavy Duty Trans., SP1, SP2, SD1, SD2		1	---- ---	2125 228 (2)	
	SD3, SC1, SC2	8	1	---- ---	2124 457	2124 457
	SP2, SD2, w/413 cu. in. Engine	8	1	---- ---	⊟2400 700	
21-04-2	GASKET, SP1, SP2, SD1, SD2		1	1949 361	1949 361 (1)	
	SP1, SP2, SD1, SD2, Heavy Duty Trans., SD3, SC1, SC2		1	---- ---	2124 519 (2)	2124 519
	SP2, SD2, w/413 cu. in. Engine	8	1	---- ---	*1921 480	
21-04-11	BUSHING, Extension, SP1, SP2, SD1, SD2		1	2124 607	1941 887 (1)	
	BEARING, Extension, SP1, SP2, SD1, SD2, Heavy Duty Trans., SD3, SC1, SC2		1	---- ---	1672 194 (2)	1672 194
	SP2, SD2, w/413 cu. in. Engine	8	1	---- ---	*1672 194	
	WASHER, Extension Bearing	8	1	---- ---	*6023 561	
21-04-12	SNAP RING, Bearing, w/413 cu. in. Engine	8	1	---- ---	*6023 560	

NOTE 1: SP2-L-M-H UP TO Engine No. 86488. SD2-L-M-H UP TO Engine No. 86488.
SP1, SD1

NOTE 2: SP2-L-M-H, SD2-L-M-H, Heavy Duty Trans. Special Equipment on UP TO Engine No. 86488.
Heavy Duty Trans. is Standard Equipment on AFTER Engine No. 86488 also Standard Equipment on SP2 Sport Fury, SD2 Polara.

MyMopar.com

STANDARD TRANSMISSION

CODE	PART NAME AND DESCRIPTION	CYL.	PER CAR	VALIANT LANCER	PLYMOUTH DODGE	CHRYSLER IMPERIAL
21-09-0	**TRANSMISSION MAIN DRIVE PINION**					
21-09-2	PINION, 24 T., 18 T., 23 Splines, 10 1/2" lgh. . .	6	1	2204 944	2204 944	
	24 T., 18 T., 23 Splines, 10 17/32" lgh., Heavy Duty Trans.	6	1	---- ---	2125 195	
	24 T., 22 T., 23 Splines, 10 17/32 lgh., SP2, SD2	8	1	---- ---	1949 371 (5)	
	24 T., 20 T., 23 Splines, 10 25/32" lgh., Heavy Duty Trans., SP2, SD2	8	1	---- ---	2124 937 (2)	
	24T., 20T., 24 Splines, 12 29/32" lgh., SD3, SC1, SC2	8	1	---- ---	*2124 683	*2124 683
	SP2, SD2, w/413 cu. in. Engine	8	1	---- ---	⊟2400 694	
21-09-5	BEARING, SP 1, SP2, SD1, SD2		1	1633 718	1633 718 (1)	
	SP1, SP2, SD1, SD2, Heavy Duty Trans., SD3, SC1, SC2		1	---- ---	2124 516 (2)	2124 516
	SP2, SD2, w/413 cu. in. Engine	8	1	---- ---	*2124 516	
21-09-19	SLINGER, Bearing, SC1, SC2		1	1633 669	1633 669	1633 669
	SP2, SD2, w/413 cu. in. Engine	8	1	---- ---	*1921 471	
21-09-23	SNAP RING, Bearing., .088" thk., SP1, SP2, SD1, SD2		★	631 823	631 823 (1)	
	.091" thk., SP1, SP2, SD1, SD2		★	631 824	631 824 (1)	
	.094" thk., SP1, SP2, SD1, SD2		★	631 825	631 825 (1)	
	.097" thk., SP1, SP2, SD1, SD2		★	640 332	640 332 (1)	
	.086" thk., SP1, SP2, SD1, SD2, Heavy Duty Trans., SC1, SC2		★	---- ---	2125 113 (4)	2125 113 (4)
	.090" thk., SP1, SP2, SD1, SD2, Heavy Duty Trans., SC1, SC2		★	---- ---	2125 114 (4)	2125 114 (4)
	.094" thk., SP1, SP2, SD1, SD2, Heavy Duty Trans., SC1, SC2		★	---- ---	2125 115 (4)	2125 115 (4)
	.098" thk., SP1, SP2, SD1, SD2, Heavy Duty Trans., SC1, SC2		★	---- ---	2125 116 (4)	2125 116 (4)
	.088" thk., SP1, SD1, Heavy Duty Trans., SP2, SD2, SD3, SC1, SC2		★	---- ---	631 823 (3)	631 823 (3)
	.091" thk., SP1, SD1, Heavy Duty Trans., SP2, SD2, SD3, SC1, SC2		★	---- ---	631 824 (3)	631 824 (3)
	.094" thk., SP1, SD1, Heavy Duty Trans., SP2, SD2, SD3, SC1, SC2		★	---- ---	631 825 (3)	631 825 (3)
	.097" thk., SP1, SD1, Heavy Duty Trans., SP2, SD2, SD3, SC1, SC2		★	---- ---	640 332 (3)	640 332 (3)
	Inner, SP2, SD2, w/413 cu. in. Engine	8	1	---- ---	*1921 472	
	Outer.	8	1	---- ---	*1569 909	
21-09-25	WASHER, Bearing		1	631 877	631 877 (1)	
	SP2, SD2, w/413 cu. in. Engine	8	1	---- ---	*1921 473	

NOTE 1: SP2-L-M-H UP TO Engine No. 86488. SD2-L-M-H UP TO Engine No. 86488.
SP1, SD1

NOTE 2: SP2-L-M-H, SD2-L-M-H, Heavy Duty Trans. Special Equipment on UP TO Engine No. 86488.
Heavy Duty Trans. is Standard Equipment on AFTER Engine No. 86488 also Standard Equipment on SP2 Sport Fury, SD2 Polara.

NOTE 3: SP1, SD1, AFTER Engine No. S17-11-61 and S22-11-61, Heavy Duty Trans.
SP2-L-M-H, SD2-L-M-H, UP TO Engine No. 86488, Heavy Duty Trans.
SP2-P AFTER Engine No. S36-11-61. SD2-P AFTER Engine No. S36-11-61.
SC1 AFTER Engine No. S36-11-61. SC2 AFTER Engine No. S41-11-61.
SD3

NOTE 4: SP1, SD1, UP TO Engine No. S17-11-61 and S22-11-61.
SP2-L-M-H, SD2-L-M-H, AFTER Engine No. 86488.
SP2-P UP TO Engine No. S36-11-61. SD2-P UP TO Engine No. S36-11-61.
SC1 UP TO Engine No. S36-11-61. SC2 UP TO Engine No. S41-11-61.

NOTE 5: SP2-L-M-H UP TO Engine No. 86488. SD2-L-M-H UP TO Engine No. 86488.

★ Indicates use as required. Numerals in parentheses ( ) refer to notes. Printed in U.S.A.
⊟ Indicates parts not listed in any previous parts book. Prices and specifications subject to change without notice.
March 8, 1963 Supersedes May 1, 1962. * Indicates change or addition.

MyMopar.com

STANDARD TRANSMISSION

CODE	PART NAME AND DESCRIPTION	CYL.	PER CAR	VALIANT LANCER	PLYMOUTH DODGE	CHRYSLER IMPERIAL
21-09-0	**TRANSMISSION MAIN DRIVE PINION - Cont'd**					
21-09-29	RETAINER, Bearing		1	2204 491	2204 491 (1)	
	SP1, SP2, SD1, SD2, Heavy Duty Trans.		1	---- ---	2124 945 (2)	
	SD3, SC1, SC2	8	1	---- ---	2124 396	2124 396
	SP2, SD2, w/413 cu. in. Engine	8	1	---- ---	⊟2400 438	
21-09-30	OIL SEAL, Pinion		1	1949 343	1949 343	
	SD3, SC1, SC2	8	1	---- ---	1949 933	1949 933
21-09-33	GASKET, Bearing Retainer, .009" thk.		★	865 180	865 180 (1)	
	.0135" thk.		★	865 181	865 181 (1)	
	.0225" thk.		★	672 709	672 709 (1)	
	.009" thk., SP1, SP2, SD1, SD2, Heavy Duty Trans., SD3, SC1, SC2		★	---- ---	2124 496 (2)	2124 496
	.0135" thk., SP1, SP2, SD1, SD2, Heavy Duty Trans., SD3, SC1, SC2		★	---- ---	2124 497 (2)	2124 497
	.0225" thk., SP1, SP2, SD1, SD2, Heavy Duty Trans., SD3, SC1, SC2		★	---- ---	2124 499 (2)	2124 499
	SP2, SD2, w/413 cu. in. Engine	8	1	---- ---	*1921 475	
21-10-0	**TRANSMISSION GEARS**					
21-10-4	GEAR, Sliding, First and Reverse, 29 T., 6 Splines		1	1853 855	1853 855 (1)	
	First and Reverse, 28 T., 34 Splines, SP1, SP2, SD1, SD2, Heavy Duty Trans., SD3, SC1, SC2		1	---- ---	2124 561 (2)	2124 561
	First and Reverse, SP2, SD2, w/413 cu. in. Engine	8	1	---- ---	⊟2400 683	
21-10-16	GEAR, Second Speed, 24 T., 24 T.	6	1	2205 134	2205 134	
	Second Speed, 24 T., 25 T.	8	1	---- ---	1322 765 (3)	
	Second Speed, 24 T., 24 T., SP1, SP2, SD1, SD2, Heavy Duty Trans., SD3, SC1, SC2		1	---- ---	2124 560 (2)	2124 560
	Second Speed, SP2, SD2, w/413 cu. in. Engine, 36T., 27T.	8	1	---- ---	⊟2400 692	
21-11-0	**TRANSMISSION REVERSE IDLER GEAR**					
21-11-1	GEAR, 15 T.		1	1853 695	1853 695 (1)	
	14 T., SP1, SP2, SD1, SD2, Heavy Duty Trans., SD3, SC1, SC2		1	---- ---	2124 562 (2)	2124 562
	SP2, SD2, w/413 cu. in. Engine	8	1	---- ---	⊟1921 501	
21-11-2	ROLLER, Bearing, SC1, SC2		22	666 927	666 927	666 927
	Bushing, SP2, SD2, w/413 cu.in. Engine	8	1	---- ---	⊟1921 503	
21-11-9	WASHER		2	666 924	666 924 (1)	
	SP1, SP2, SD1, SD2, Heavy Duty Trans., SD3, SC1, SC2		2	---- ---	2204 978 (2)	2204 978
21-12-0	**TRANSMISSION REVERSE IDLER GEAR SHAFT**					
21-12-1	SHAFT, SC1, SC2		1	1635 290	1635 290	1635 290
	SP2, SD2, w/413 cu. in. Engine	8	1	---- ---	⊟1921 504	
21-12-2	KEY, SC1, SC2		1	1635 293	1635 293	1635 293

NOTE 1: SP2-L-M-H UP TO Engine No. 86488. SD2-L-M-H UP TO Engine No. 86488.
SP1, SD1

NOTE 2: SP2-L-M-H, SD2-L-M-H, Heavy Duty Trans. Special Equipment on UP TO Engine No. 86488.
Heavy Duty Trans. is Standard Equipment on AFTER Engine No. 86488 also Standard Equipment on SP2 Sport Fury, SD2 Polara.

NOTE 3: SP2-L-M-H UP TO Engine No. 86488. SD2-L-M-H UP TO Engine No. 86488.

★ Indicates use as required. Numerals in parentheses ( ) refer to notes. Printed in U.S.A.
⊟ Indicates parts not listed in any previous parts book. Prices and specifications subject to change without notice.
* Indicates change or addition.

March 8, 1963 Supersedes May 1, 1962.

MyMopar.com

STANDARD TRANSMISSION

CODE	PART NAME AND DESCRIPTION	CYL.	PER CAR	VALIANT LANCER	PLYMOUTH DODGE	CHRYSLER IMPERIAL
21-14-0	**TRANSMISSION CLUTCH GEAR**					
21-14-1	SYNCHRONIZER UNIT		1	2205 058	2205 058 (1)	
	SP1, SP2, SD1, SD2, Heavy Duty Trans., SC1, SC2		1	---- ---	2124 467 (4)	2124 467 (4)
			1	---- ---	2400 315 (5)	2400 315 (5)
	SP2, SD2, w/413 cu. in. Engine	8	1	---- ---	*1921 487	
21-14-5	GEAR, 24 T.		1	1853 672	1853 672 (1)	
	24 T., SP1, SP2, SD1, SD2, Heavy Duty Trans., SC1, SC2		1	---- ---	2124 392 (4)	2124 392 (4)
	24 T.		1	---- ---	2204 666 (5)	2204 666 (5)
	Second and Direct, SP2, SD2, w/413 cu. in. Engine	8	1	---- ---	*1921 486	
21-14-6	SLEEVE		1	1676 197	1676 197 (1)	
	SP1, SP2, SD1, SD2, Heavy Duty Trans., SD3, SC1, SC2		1	---- ---	2124 387 (2)	2124 387
21-14-15	SPRING, Synchronizer Stop Ring		1	2205 061	2205 061 (1)	
	SP1, SP2, SD1, SD2, Heavy Duty Trans., SC1, SC2		1	---- ---	2204 503 (4)	2204 503 (4)
			1	---- ---	2205 061 (5)	2205 061 (5)
21-14-19	RING, Synchronizer Stop, Outer		2	2205 059	2205 059 (1)	
	Inner		★	1322 763	1322 763 (1)	
	Outer, SP1, SP2, SD1, SD2, Heavy Duty Trans., SD3, SC1, SC2		2	---- ---	2124 468 (2)	2124 468
	Inner, SP1, SP2, SD1, SD2, Heavy Duty Trans., SD3, SC1, SC2		2	---- ---	2124 472 (2)	2124 472
	SP2, SD2, w/413 cu. in. Engine	8	1	---- ---	*1921 499	
21-14-20	SNAP RING, .088" thk., SC1, SC2		★	631 823	631 823 (4)	631 823 (4)
	.091" thk., SC1, SC2		★	631 824	631 824 (4)	631 824 (4)
	.094" thk., SC1, SC2		★	631 825	631 825 (4)	631 825 (4)
	.097" thk., SC1, SC2		★	640 332	640 332 (4)	640 332 (4)
			1	---- ---	2205 192 (5)	2205 192 (5)
21-15-0	**TRANSMISSION COUNTERSHAFT GEAR**					
21-15-2	GEAR, 33 T., 24 T., 18 T., 14 T., 6.83" lgh.	6	1	2205 132	2205 132	
	33 T., 25 T., 17 T., 13 T., Heavy Duty Trans.	6	1	---- ---	2124 386	
	29 T., 23 T., 18 T., 14 T.	8	1	---- ---	1853 627 (3)	
	31 T., 25 T., 17 T., 13 T., SP2, SD2, Heavy Duty Trans., SD3, SC1, SC2	8	1	---- ---	2124 384 (2)	2124 384
	SP2, SD2, w/413 cu. in. Engine	8	1	---- ---	⊟2400 696	
21-15-33	WASHER, Thrust, .057" thk.		★	1633 763	1633 763 (1)	
	.062" thk.		★	1633 762	1633 762 (1)	
	.057" thk., SP1, SP2, SD1, SD2, Heavy Duty Trans., SD3, SC1, SC2		★	---- ---	2124 505 (2)	2124 505

NOTE 1: SP2-L-M-H UP TO Engine No. 86488. SD2-L-M-H UP TO Engine No. 86488.
SP1, SD1

NOTE 2: SP2-L-M-H, SD2-L-M-H, Heavy Duty Trans. Special Equipment on UP TO Engine No. 86488.
Heavy Duty Trans., is Standard Equipment on AFTER Engine No. 86488 also Standard Equipment on SP2 Sport Fury, SD2 Polara.

NOTE 3: SP2-L-M-H UP TO Engine No. 86488. SD2-L-M-H UP TO Engine No. 86488.

NOTE 4: SP1, SD1, UP TO Engine No. S17-11-61 and S22-11-61.
SP2-L-M-H, SD2-L-M-H, UP TO Engine No. 86488, Heavy Duty Trans.
SP2-P UP TO Engine No. S36-11-61. SD2-P UP TO Engine No. S36-11-61.
SC1 UP TO Engine No. S36-11-61. SC2 UP TO Engine No. S41-11-61.

NOTE 5: SP1, SD1, AFTER Engine No. S17-11-61 and S22-11-61, Heavy Duty Trans.
SP2-L-M-H, SD2-L-M-H, AFTER Engine No. 86488.
SP2-P AFTER Engine No. S36-11-61. SD2 AFTER Engine No. S36-11-61.
SC1 AFTER Engine No. S36-11-61. SC2 AFTER Engine No. S41-11-61.
SD3

★ Indicates use as required. Numerals in parentheses ( ) refer to notes. Printed in U.S.A.
⊟ Indicates parts not listed in any previous parts book. Prices and specifications subject to change without notice.
March 8, 1963 Supersedes May 1, 1962. * Indicates change or addition.

MyMopar.com

STANDARD TRANSMISSION

CODE	PART NAME AND DESCRIPTION	CYL.	PER CAR	VALIANT LANCER	PLYMOUTH DODGE	CHRYSLER IMPERIAL
21-15-0	**TRANSMISSION COUNTERSHAFT GEAR - Cont'd**					
21-15-33	WASHER - Cont'd					
	.062" thk., SP1, SP2, SD1, SD2, Heavy Duty Trans., SD3, SC1, SC2		★	---- ---	2124 504 (2)	2124 504
	Front, SP2, SD2, w/413 cu. in. Engine	8	1	---- ---	*1921 492	
	Rear, SP2, SD2, w/413 cu. in. Engine	8	1	---- ---	*1921 493	
21-16-0	**TRANSMISSION MAIN SHAFT**					
21-16-3	SHAFT, 6, 23, Splines, 22 1/4" lgh.	6	1	2125 179		
	6, 23, Splines, 25 1/2" lgh.		1	---- ---	1949 365 (1)	
	6, 34, 23, Splines, 25" lgh., SP1, SP2, SD1, SD2, Heavy Duty Trans., SC1, SC2		1	---- ---	2124 554 (3)	2124 554 (3)
	32, 34, 23, Splines, 25 1/4" lgh.		1	---- ---	2204 665 (4)	⊟2204 665 (4)
	SP2, SD2, w/413 cu. in. Engine	8	1	---- ---	⊟2400 697	
21-17-0	**TRANSMISSION MAIN SHAFT PILOT BEARING**					
21-17-2	ROLLER, SC1, SC2		★	1949 834	1949 834	1949 834
	SP2, SD2, w/413 cu. in. Engine	8	14	---- ---	*1921 482	
21-17-7	SNAP RING, Roller		1	601 108	601 108 (1)	
	SP1, SP2, SD1, SD2, Heavy Duty Trans., SD3, SC1, SC2		1	---- ---	862 173 (2)	862 173
21-17-9	SPACER, Bearing Roller, SP2, SD2, w/413 cu. in. Engine	8	1	---- ---	*1923 509	
21-19-0	**TRANSMISSION MAIN SHAFT BEARING**					
21-19-2	BEARING		1	1633 718	1633 718 (1)	
	Front, SP1, SP2, SD1, SD2, Heavy Duty Trans., SD3, SC1, SC2		1	---- ---	620 521 (2)	620 521
	SP2, SD2, w/413 cu. in. Engine	8	1	---- ---	* 620 521	
21-19-15	SNAP RING, Inner, .088" thk., SC1, SC2		★	631 823	631 823	631 823
	Inner, .091" thk., SC1, SC2		★	631 824	631 824	631 824
	Inner, .095" thk., SC1, SC2		★	631 825	631 825	631 825
	Inner, .097" thk., SC1, SC2		★	640 332	640 332	640 332
	Outer, .086" thk.		★	640 280	640 280 (1)	
	Outer, .089" thk.		★	631 809	631 809 (1)	
	Outer, .092" thk.		★	631 810	631 810 (1)	
	Outer, .095" thk.		★	640 331	640 331 (1)	
	Outer, .087" thk., SP1, SP2, SD1, SD2, Heavy Duty Trans., SD3, SC1, SC2		★	---- ---	2124 508 (2)	2124 508

NOTE 1: SP2-L-M-H UP TO Engine No. 86488. SD2-L-M-H UP TO Engine No. 86488.
SP1, SD1

NOTE 2: SP2-L-M-H, SD2-L-M-H, Heavy Duty Trans., Special Equipment on UP TO Engine No. 86488.
Heavy Duty Trans., is Standard Equipment on AFTER Engine No. 86488, also Standard Equipment on SP2 Sport Fury, SD2 Polara, SD3.

NOTE 3: SP1, SD1, UP TO Engine No. S17-11-61 and S22-11-61.
SP2-L-M-H, SD2-L-M-H, UP TO Engine No. 86488, Heavy Duty Trans.
SP2-P UP TO Engine No. S36-11-61 SD2-P UP TO Engine No. S36-11-61.
SC1 UP TO Engine No. S36-11-61. SC2 UP TO Engine No. S41-11-61.

NOTE 4: SP1, SD1, AFTER Engine No. S17-11-61 and S22-11-61, Heavy Duty Trans.
SP2-L-M-H, SD2-L-M-H, AFTER Engine No. 86488.
SP2-P AFTER Engine No. S36-11-61. SD2 AFTER Engine No. S36-11-61.
SC1 AFTER Engine No. S36-11-61. SC2 AFTER Engine No. S41-11-61.
SD3

★ Indicates use as required. Numerals in parentheses ( ) refer to notes. Printed in U.S.A.
⊟ Indicates parts not listed in any previous parts book. Prices and specifications subject to change without notice.
* Indicates change or addition.

March 8, 1963 Supersedes May 1, 1962.

MyMopar.com

STANDARD TRANSMISSION

CODE	PART NAME AND DESCRIPTION	CYL.	PER CAR	VALIANT LANCER	PLYMOUTH DODGE	CHRYSLER IMPERIAL
21-19-0	**TRANSMISSION MAIN SHAFT BEARING - Cont'd**					
21-19-15	SNAP RING - Cont'd					
	Outer, .090" thk., SP1, SP2, SD1, SD2, Heavy Duty Trans., SD3, SC1, SC2		★	---- ---	2124 509 (2)	2124 509
	Outer, .093" thk., SP1, SP2, SD1, SD2, Heavy Duty Trans., SD3, SC1, SC2		★	---- ---	2124 510 (2)	2124 510
	Outer, .096" thk., SP1, SP2, SD1, SD2, Heavy Duty Trans., SD3, SC1, SC2		★	---- ---	2124 511 (2)	2124 511
	Outer, SP2, SD2, w/413 cu. in. Engine	8	2	---- ---	*1921 481	
	Inner, SP2, SD2, w/413 cu. in. Engine	8	1	---- ---	*1921 472	
21-22-0	**TRANSMISSION MAIN SHAFT BEARING OIL SEAL**					
21-22-2	OIL SEAL		1	1942 401	1854 449 (1)	
	SP1, SP2, SD1, SD2, Heavy Duty Trans., SD3, SC1, SC2		1	---- ---	2205 080 (2)	2205 080
	SP2, SD2, w/413 cu. in. Engine	8	1	---- ---	*2205 080	
21-24-0	**TRANSMISSION COUNTERSHAFT**					
21-24-2	COUNTERSHAFT		1	1635 282	1635 282 (1)	
	SP1, SP2, SD1, SD2, Heavy Duty Trans., SD3, SC1, SC2		1	---- ---	2124 393 (2)	2124 393
	SP2, SD2, w/413 cu. in. Engine	8	1	---- ---	*1921 491	
21-24-19	PLATE or WASHER, Thrust, SP1, SP2, SD1, SD2, Heavy Duty Trans., SD3, SC1, SC2		1	---- ---	2124 474 (2)	2124 474
	Rear, SP2, SD2, w/413 cu. in. Engine	8	1	---- ---	*1921 494	
21-24-22	KEY, SC1, SC2		1	1635 293	1635 293	1635 293
21-25-0	**TRANSMISSION COUNTERSHAFT BEARING**					
21-25-2	ROLLER		44	666 927	666 927 (1)	
	SP1, SP2, SD1, SD2, Heavy Duty Trans., SD3, SC1, SC2		88	---- ---	2124 502 (2)	2124 502
	SP2, SD2, w/413 cu. in. Engine	8	80	---- ---	*1921 495	
21-25-4	SPACER		1	697 812	697 812 (1)	
	SP1, SP2, SD1, SD2, Heavy Duty Trans., SD3, SC1, SC2		1	---- ---	2124 473 (2)	2124 473
	SP2, SD2, w/413 cu. in. Engine	8	1	---- ---	*1921 496	
21-25-6	WASHER or RING, Roller Thrust		2	1630 878	1630 878 (1)	
	SP1, SP2, SD1, SD2, Heavy Duty Trans., SD3, SC1, SC2		4	---- ---	2124 506 (2)	2124 506
	SP2, SD2, w/413 cu. in. Engine	8	4	---- ---	*1921 497	
21-29-0	**TRANSMISSION CASE COVER**					
21-29-3	COVER		1	1949 345	1949 345 (1)	
	SP1, SP2, SD1, SD2, Heavy Duty Trans., SD3, SC1, SC2		1	---- ---	2124 465 (2)	2124 465
21-29-3	HOUSING, SP2, SD2, w/413 cu. in. Engine	8	1	---- ---	*1921 506	
21-29-25	GASKET, Cover		1	1949 346	1949 346 (1)	
	SP1, SP2, SD1, SD2, Heavy Duty Trans., SD3, SC1, SC2		1	---- ---	2124 466 (2)	2124 466
	SP2, SD2, w/413 cu. in. Engine	8	1	---- ---	*1921 507	

NOTE 1: SP2-L-M-H UP TO Engine No. 86488. SD2-L-M-H UP TO Engine No. 86488. SP1, SD1

NOTE 2: SP2-L-M-H, SD2-L-M-H, Heavy Duty Trans. Special Equipment on UP TO Engine No. 86488. Heavy Duty Trans. is Standard Equipment on AFTER Engine No. 86488 also Standard Equipment on SP2 Sport Fury, SD2 Polara.

★ Indicates use as required. Numerals in parentheses ( ) refer to notes. Printed in U.S.A.
⊟ Indicates parts not listed in any previous parts book. Prices and specifications subject to change without notice.
March 8, 1963 Supersedes May 1, 1962. * Indicates change or addition.

MyMopar.com

STANDARD TRANSMISSION

21-30-O TRANSMISSION GEARSHIFT LEVER AND RODS

CODE	PART NAME AND DESCRIPTION	CYL.	PER CAR	VALIANT LANCER	PLYMOUTH DODGE	CHRYSLER IMPERIAL
21-30-2	LEVER, w/KNOB, SP1, SP2, SD1, SD2		1	*2266 176	*2266 176	
	WASHER, Spring		1	6023 046	6023 046	
	LEVER, w/FORK, SD3, SC1, SC2	8	1	---- ---	2203 480	2203 480
	LEVER, SP2, SD2, w/413 cu. in. Engine	8	1	---- ---	⊟2404 890	
21-30-5	INSULATOR, Lever		1	2265 662	2265 662	
21-30-6	KNOB, SD3, SC1, SC2	8	1	---- ---	2208 140	2208 140
21-30-315	PLATE, Control Bell Crank to Floor Pan Bracket, SD3, SC1, SC2	8	1	---- ---	2203 483	2203 483
21-30-316	BRACKET, Control Bell Crank to Extension, SD3, SC1, SC2	8	1	---- ---	2203 498	2203 498
	Control Bell Crank to Floor, SD3, SC1, SC2	8	1	---- ---	2208 189	2208 189
21-30-317	SPACER, Control Bell Crank to SD3, SC1, SC2	8	2	---- ---	6022 279	6022 279
21-30-413	BOOT, Control, Upper, SD3, SC1, SC2	8	1	---- ---	2260 856	2260 856
	Lower, SD3, SC1, SC2	8	1	---- ---	2074 506	2074 506
	SP2, SD2, w/413 cu. in. Engine	8	1	---- ---	⊟2419 709	
21-30-414	RING, Upper Boot, SD3, SC1, SC2	8	1	---- ---	2073 554	2073 554
	Lower, SP2, SD2, w/413 cu. in. Engine	8	1	---- ---	⊟2419 710	
	Upper, SP2, SD2, w/413 cu. in. Engine	8	1	---- ---	⊟2419 711	
21-30-415	RING, Shaft Lock, SD3, SC1, SC2	8	1	---- ---	1946 343	1946 343
21-30-416	SUPPORT, Gearshift Control Lever, SD3, SC1, SC2	8	1	---- ---	2208 188	2208 188
21-30-417	PIN, Control Lever, SD3, SC1, SC2	8	1	---- ---	2073 553	2073 553
21-30-418	ROD, Control, 1st and Reverse, SD3, SC1, SC2	8	1	---- ---	2203 493	2203 493
	Rear, 2nd and 3rd, SD3, SC1, SC2	8	1	---- ---	2203 488	2203 488
	Front, 2nd and 3rd, SD3, SC1, SC2	8	1	---- ---	2203 494	2203 494
	1st and Reverse, SP2, SD2, w/413 cu. in. Engine	8	1	---- ---	⊟2404 881	
	2nd and 3rd, SP2, SD2, w/413 cu. in. Engine	8	1	---- ---	⊟2404 880	
21-30-420	LEVER, Control Rod, SD3, SC1, SC2	8	2	---- ---	2203 475	2203 475
21-30-421	SHAFT, Gearshift Control Lever, SD3, SC1, SC2	8	1	---- ---	2073 555	2073 555
21-30-422	DIVIDER, Lever Rod, SD3, SC1, SC2	8	1	---- ---	2073 557	2073 557
21-30-423	BUSHING, Lever Hub, SD3, SC1, SC2	8	2	---- ---	2073 558	2073 558
	Lever Shaft, SD3, SC1, SC2	8	2	---- ---	2073 556	2073 556
21-30-425	SCREW, Lever Pivot, Rear, SD3, SC1, SC2	8	1	---- ---	2074 526	2074 526
	Front, SD3, SC1, SC2	8	1	---- ---	2074 525	2074 525
21-30-426	WASHER, Lever Shaft, Plain, SD3, SC1, SC2	8	2	---- ---	2073 574	2073 574
	WASHER, Control Rod Spring, SD3, SC1, SC2	8	★	---- ---	6025 070	6025 070
	WASHER, Control Rod, Plain, SD3, SC1, SC2	8	★	---- ---	631 217	631 217
	WASHER, Rear Swivel Spring, SD3, SC1, SC2	8	1	---- ---	391 888	391 888
21-30-427	SPRING, Lever, SD3, SC1, SC2	8	1	---- ---	2073 565	2073 565
	SP2, SD2, w/413 cu. in. Engine	8	1	---- ---	⊟2404 885	
21-30-428	SWIVEL, Rod, 1st and Reverse, SD3, SC1, SC2	8	1	---- ---	2074 521	2074 521
	2nd and 3rd, SD3, SC1, SC2	8	1	---- ---	2074 535	2074 535
	SP2, SD2, w/413 cu. in. Engine	8	2	---- ---	⊟2404 859	

★ Indicates use as required. Numerals in parentheses ( ) refer to notes. Printed in U.S.A.
⊟ Indicates parts not listed in any previous parts book. Prices and specifications subject to change without notice.
* Indicates change or addition.

March 8, 1963 Supersedes May 1, 1962.

MyMopar.com

STANDARD TRANSMISSION

CODE	PART NAME AND DESCRIPTION	CYL.	PER CAR	VALIANT LANCER	PLYMOUTH DODGE	CHRYSLER IMPERIAL
21-30-0	**TRANSMISSION GEARSHIFT LEVER AND RODS - Cont'd**					
21-30-429	CLAMP, Rod Swivel, SD3, SC1, SC2	8	1	---- ---	2074 543	2074 543
21-30-430	GROMMET, Gearshift Control Bell Crank Bushing, SD3, SC1, SC2	8	1	---- ---	2074 539	2074 539
21-30-431	BUSHING, Bell Crank, SD3, SC1, SC2	8	1	---- ---	2074 553	2074 553
21-30-432	SPRING, Control Bell Crank to Trans. Extension Bracket Stud, SD3, SC1, SC2	8	1	---- ---	2074 534	2074 534
21-30-433	CLIP, Rod, SD3, SC1, SC2	8	★	---- ---	1137 669	1137 669
21-30-434	BRACKET, Gearshift Control Shaft, w/LEVERS, SP2, SD2, w/413 cu. in. Engine	8	1	---- ---	⊟2404 882	
21-30-435	STUD, Bell Crank to Trans. Extension Bracket, SD3, SC1, SC2	8	1	---- ---	2074 508	2074 508
21-30-436	LINK or BELL CRANK, Control, w/BUSHING, SD3, SC1, SC2	8	1	---- ---	2203 495	2203 495
21-30-437	WASHER, Bell Crank Bushing, SD3, SC1, SC2	8	1	---- ---	2074 554	2074 554
21-30-438	PIN, Bell Crank to Floor Pan Bracket, SD3, SC1, SC2	8	1	---- ---	2074 547	2074 547
21-34-0	**TRANSMISSION GEARSHIFT RAIL**					
21-34-42	PIN, Interlock, SC1, SC2		1	1949 356	1949 356	1949 356
	SP2, SD2, w/413 cu. in. Engine	8	1	---- ---	*1921 522	
21-34-45	SLEEVE, Interlock, SC1, SC2*		1	1949 355	1949 355	1949 355
	Thin, SP2, SD2, w/413 cu. in. Engine	8	★	---- ---	*1921 518	
	Medium, SP2, SD2, w/413 cu. in. Engine	8	★	---- ---	*1921 519	
	Thick, SP2, SD2, w/413 cu. in. Engine	8	★	---- ---	*1921 520	
	Extra Thick, SP2, SD2, w/413 cu. in. Engine	8	★	---- ---	*1921 521	
21-34-47	SPRING, Interlock Ball		1	2205 131	2205 131 (1)	
	SP1, SP2, SD1, SD2, Heavy Duty Trans., SD3, SC1, SC2		1	---- ---	1853 745 (2)	1853 745
	SP2, SD2, w/413 cu. in. Engine	8	1	---- ---	*1921 523	
21-39-0	**TRANSMISSION GEARSHIFT FORK**					
21-39-3	FORK, Low and Reverse		1	1949 351	1949 351 (1)	
	Second and Direct		1	2125 059	2125 059 (1)	
	Low and Reverse, SP1, SP2, SD1, SD2, Heavy Duty Trans., SD3, SC1, SC2		1	---- ---	2124 463 (2)	2124 463
	Second and Direct, SP1, SP2, SD1, SD2, Heavy Duty Trans., SD3, SC1, SC2		1	---- ---	2124 462 (2)	2124 462
	Low and Reverse, SP2, SD2, w/413 cu. in. Engine	8	1	---- ---	*1921 517	
	Second and Direct, SP2, SD2, w/413 cu. in. Engine	8	1	---- ---	*1921 516	
21-42-0	**TRANSMISSION REMOTE CONTROL GEARSHIFT**					
21-42-11	LEVER, Low and Reverse		1	1949 347	1949 347 (1)	
	Second and Direct		1	1949 352	1949 352 (1)	

NOTE 1: SP1-L-M-H UP TO Engine No. 86488. SD2-L-M-H UP TO Engine No. 86488. SP1, SD1

NOTE 2: SP2-L-M-H, SD2-L-M-H, Heavy Duty Trans., Special Equipment on UP TO Engine No. 86488, Heavy Duty Trans. is Standard Equipment on AFTER Engine No. 86488, also Standard Equipment on SP2 Sport Fury, SD2 Polara.

★ Indicates use as required. Numerals in parentheses ( ) refer to notes. Printed in U.S.A.
⊟ Indicates parts not listed in any previous parts book. Prices and specifications subject to change without notice.
March 8, 1963 Supersedes May 1, 1962. * Indicates change or addition.

MyMopar.com

STANDARD TRANSMISSION

21-42-0 TRANSMISSION REMOTE CONTROL GEARSHIFT - Cont'd

CODE	PART NAME AND DESCRIPTION	CYL.	PER CAR	VALIANT LANCER	PLYMOUTH DODGE	CHRYSLER IMPERIAL
21-42-11	LEVER - Cont'd					
	Low and Reverse, SP1, SP2, SD1, SD2, Heavy Duty Trans., SD3, SC1, SC2		1	---- ---	2124 523 (2)	2124 523
	Second and Direct, SP1, SP2, SD1, SD2, Heavy Duty Trans., SD3, SC1, SC2		1	---- ---	2124 494 (2)	2124 494
	Low and Reverse, SP2, SD2, w/413 cu. in. Engine	8	1	---- ---	*1923 508	
	Second and Direct, SP2, SD2, w/413 cu. in. Engine	8	1	---- ---	*1921 508	
21-42-16	PIN, SC1, SC2		2	6022 161	6022 161	6022 161
21-42-23	LEVER, Operating, Low and Reverse	6	1	2204 903		
	Second and Direct	6	1	2204 904		
	Low and Reverse, SP1, SP2, SD1, SD2		1	---- ---	2204 907 (1)	
	Low and Reverse, Heavy Duty Trans., SP1, SP2, SD1, SD2		1	---- ---	2204 932 (2)	
	Second and Direct, SP1, SP2, SD1, SD2		1	---- ---	2208 160	
	Low and Reverse, SD3, SC1, SC2	8	1	---- ---	2204 398	2204 398
	Second and Direct, SD3, SC1, SC2	8	1	---- ---	2204 397	2204 397
	Low and Reverse, SP2, SD2, w/413 cu. in. Engine	8	1	---- ---	⊟2400 699	
	Second and Direct, SP2, SD2, w/413 cu. in. Engine	8	1	---- ---	⊟2400 698	
21-42-31	SEAL, Gearshift Lever, Shaft, SC1, SC2		2	*1949 350	*1949 350	*1949 350
	SP2, SD2, w/413 cu. in. Engine	8	2	---- ---	*1921 513	
21-42-42	BUSHING, Operating Lever Grommet		2	1676 200	1676 200	
21-42-43	GROMMET, Operating Lever		2	1941 699	1941 699	

21-84-0 TRANSMISSION SPEEDOMETER CABLE SHAFT AND HOUSING

CODE	PART NAME AND DESCRIPTION	CYL.	PER CAR	VALIANT LANCER	PLYMOUTH DODGE	CHRYSLER IMPERIAL
21-84-1	HOUSING, w/SHAFT, 58" lgh.	6	1	2290 459		
	78" lgh.		1	---- ---	2290 461	
	58" lgh., SD3, SC1, except Sub., SC2	8	1	---- ---	2290 459	2290 459
	59 1/32" lgh., SD3, SC1, Sub. (also specify 1 of 1370460)	8	1	---- ---	1819 948	1819 948
	59 1/32" lgh., SC1 except Sub., SC2, w/3.23 Ratio and 15 x 7.60 Tires (also specify 1 of 1370460) w/ADAPTER	8	1	---- ---	---- ---	1819 948
21-84-4	SHAFT, 58" lgh.	6	1	2290 469		
	58 43/64" lgh.	6	1	⊟2426 164		
	78" lgh.		1	---- ---	2290 471	
	62 43/64" lgh., SD3, SC1, except Sub., SC2	8	1	---- ---	2076 656	2076 656
	65" lgh., SD3, SC1, Sub.	8	1	---- ---	2209 229	2209 229
	65" lgh., SC1 except Sub., SC2, w/3.23 Ratio and 15 x 7.60 Tires, w/ADAPTER	8	1	---- ---	---- ---	2209 229
	58" lgh., SD3, SC1, except Sub., SC2	8	1	---- ---	2290 469	2290 469
	59 1/32" lgh., SD3, SC1, Sub.	8	1	---- ---	1163 782	1163 782
21-84-7	CLAMP, Cable		1	2204 942	2204 942	2204 942
21-84-28	SEAL, Speedometer Cable Adapter		1	1942 259	1942 259	1942 259

NOTE 1: SP2-L-M-H UP TO Engine No. 86488. SD2-L-M-H UP TO Engine No. 86488.
SP1, SD1

NOTE 2: SP2-L-M-H, SD2-L-M-H, Heavy Duty Trans., Special Equipment on UP TO Engine No. 86488. Heavy Duty Trans., is Standard Equipment on AFTER Engine No. 86488, also Standard Equipment on SP2 Sport Fury, SD2 Polara.

MyMopar.com

CODE	PART NAME AND DESCRIPTION	CYL.	PER CAR	VALIANT LANCER	PLYMOUTH DODGE	CHRYSLER IMPERIAL

STANDARD TRANSMISSION

21-85-0 TRANSMISSION SPEEDOMETER PINION

21-85-4	GEAR, Speedometer Drive, SP2, SD2, w/413 cu. in. Engine	8	1	---- ---	⊟2400 437	
21-85-5	PINION, SP2, SD2, w/413 cu. in. Engine, w/3.23 Ratio	8	1	---- ---	*2204 355	
	SP2, SD2, w/413 cu. in. Engine, w/3.91 Ratio	8	1	---- ---	*2204 357	

STANDARD TRANSMISSION SV1, SL1, SP1, SP2, SD1, SD2 - A903

	3.23 to 1 Ratio		3.31 to 1 Ratio		3.55 to 1 Ratio		3.91 to 1 Ratio	
Tire Size	Pinion	Teeth	Pinion	Teeth	Pinion	Teeth	Pinion	Teeth
6.50 x 13	2204 358	19 DB	---- ---	--	2204 359	20 G	2204 359	20 G
6.70 x 13	2204 356	17 O	---- ---	--	2204 358	19 DB	2204 360	21 GR
6.50 x 14	2204 357	18 DP	2204 358	19 DB	2204 359	20 G	2204 359	20 G
7.00 x 14	2204 357	18 DP	2204 357	18 DP	2204 358	19 DB	2204 360	21 GR
7.50 x 14	2204 356	17 O	2204 356	17 O	2204 358	19 DB	2204 360	21 GR
6.70 x 15	2204 356	17 O	2204 356	17 O	2204 357	18 DP	2204 359	20 G

COLORS OF PINIONS

DB-DARK BLUE O-ORANGE DP-DARK PURPLE G-GREEN GR-GRAY

HEAVY DUTY STANDARD TRANSMISSION SP1, SP2, SD1, SD2, SD3, SC1, SC2 - A745

	3.23 to 1 Ratio		3.55 to 1 Ratio		3.91 to 1 Ratio	
Tire Size	Pinion	Teeth	Pinion	Teeth	Pinion	Teeth
6.50 x 14	1949 402	18 N	1949 404	20 B	1949 406	22 Y
7.00 x 14	1949 402	18 N	1949 403	19 R	1949 405	21 LB
7.50 x 14	1949 401	17 LP	1949 403	19 R	1949 405	21 LB
8.00 x 14	1949 401	17 LP	---- ---	-- --	---- ---	-- --
8.50 x 14	1949 401	17 LP	---- ---	-- --	---- ---	-- --
6.70 x 15	1949 401	17 LP	1949 402	18 N	1949 404	20 B
7.60 x 15	1949 401	17 LP	---- ---	-- --	---- ---	-- --

COLORS OF PINIONS

N-NATURAL B-BLACK Y-YELLOW LP-LIGHT PURPLE R-RED LB-LIGHT BLUE

CODE	PART NAME AND DESCRIPTION	CYL.	PER CAR	VALIANT LANCER	PLYMOUTH DODGE	CHRYSLER IMPERIAL
21-85-9	ADAPTER, Drive Pinion, w/3.91 to 1 Ratio and 6.50 x 13" tires	6	1	2291 133		
	w/3.91 to 1 Ratio and 6.50 x 14" Tires	6	1	---- ---	2291 141	
	SD3, Sub. use w/7.10 x 15, 7.60 x 15, 8.50 x 14 Tires	8	1	---- ---	2291 140	2291 140
	w/3.91 Ratio, SP2, SD2, w/413 cu.in. Engine	8	1	---- ---	*2291 141	
	w/3.23 Ratio, SP2, SD2, w/413 cu.in. Engine	8	1	---- ---	*2291 140	
21-85-29	SNAP RING, Speedometer Drive Gear, SP2, SD2, w/413 cu. in. Engine	8	2	---- ---	*6023 560	
21-85-56	SEAL, Pinion, SC1, SC2		1	2124 328	2124 328	2124 328
21-85-61	CLIP, Pinion, SC1, SC2		1	1942 174	1942 174	1942 174

★ Indicates use as required. Numerals in parentheses ( ) refer to notes. Printed in U.S.A.
⊟ Indicates parts not listed in any previous parts book. Prices and specifications subject to change without notice.
March 8, 1963 Supersedes May 1, 1962. * Indicates change or addition.

MyMopar.com

AUTOMATIC 3 - SPEED TRANSMISSION

CODE	PART NAME AND DESCRIPTION	CYL.	PER CAR	VALIANT LANCER	PLYMOUTH DODGE	CHRYSLER IMPERIAL
21-01-0	**TRANSMISSION SETS OR PACKAGES**					
21-01-3	SEAL and GASKET PACKAGE,					
	UP TO Trans. No. 523930	6	1	2275 422	2275 422	
	AFTER Trans. No. 523930	6	1	2298 952	2298 952	
	SP2, SD2, UP TO Trans. No. 117651	8	1	---- ---	2275 499	
	SP2, SD2, AFTER Trans. No. 117651	8	1	---- ---	2298 953	
	SD3	8	1	---- ---	2275 499	2275 499
21-02-0	**TRANSMISSION ASSEMBLY**					
21-02-1	TRANSMISSION, UP TO Trans. No. 523930	6	1	2204 917	2204 841	
	AFTER Trans. No. 523930	6	1	2400 154	2400 155	
	w/225 cu.in. Engine, UP TO Trans. No. 523930	6	1	2204 916		
	w/225 cu.in. Engine, AFTER Trans. No. 523930	6	1	2400 156		
	SP2, SD2, w/318 cu. in. Engine	8	1	---- ---	*2400 157	
	SP2, SD2, w/361 and 383 cu. in. Engine	8	1	---- ---	*2400 158	
	SP2, SD2, w/413 cu. in. Engine	8	1	---- ---	⊟2408 007	
	SD3	8	1	---- ---	1942 275	1942 275
	SC1 Police Cars w/383 cu. in. Engine, SC2 w/413 cu. in. Engine	8	1	---- ---	---- ---	2205 190
21-02-8	BAFFLE, Vent	8	1	---- ---	2400 479	2400 479
21-03-0	**TRANSMISSION CASE**					
21-03-1	CASE, UP TO Trans. No. 523930	6	1	2125 237	2125 237	
	AFTER Trans. No. 523930	6	1	2400 099	2400 099	
	SP2, SD2, w/318 cu. in. Engine	8	1	---- ---	*2400 130	
	SP2, SD2, w/361, 383 and 413 cu. in. Engine, SD3.	8	1	---- ---	*2400 131	2400 131
21-03-6	COVER, Case, Torque Converter	6	1	1949 767	1949 767	
	SP2, SD2, w/318 cu. in. Engine	8	1	---- ---	*2125 057	
	SP2, SD2, w/361, 383 and 413 cu. in. Engine	8	1	---- ---	*1942 248	
	SD3	8	1	---- ---	1942 248	1942 248
21-03-7	COVER, Torque Converter Drain, SP2, SD2, w/318 cu. in. Engine	8	1	---- ---	*2204 728	
21-03-23	SCREW, Cylinder Block to Transmission Case	6	1	2124 411	2124 411	
		6	2	2124 410	2124 410	
	Case to Cylinder Block		★	6023 187	6023 187	6023 187
	Cylinder Block to Transmission Case	8	2	---- ---	6012 042	6012 042
	Bracket to Cylinder Block	6	2	6023 143	6023 143	
	Bracket to Case, SP2, SD2	8	2	---- ---	6023 143	
	Bracket to Case	6	2	6022 258	6022 258	
	Bracket to Cylinder Block, SP2, SD2	8	2	---- ---	6022 258	
21-03-28	BRACKET, Case to Cylinder Block, Left Side	6	1	1949 701	1949 701	
	Left Side, SP2, SD2	8	1	---- ---	2204 707	
	Right Side, SP2, SD2	8	1	---- ---	2204 702	
21-04-0	**TRANSMISSION CASE EXTENSION**					
21-04-1	EXTENSION, UP TO Trans., No. 523930	6	1	2204 395	1942 530	
	AFTER Trans., No. 523930	6	1	2400 134	2400 136	
	SP2, SD2	8	1	---- ---	*2400 065	
	SD3	8	1	---- ---	2204 676	2204 676
21-04-2	GASKET, UP TO Trans. No. 523930	6	1	2125 239	2125 239	
	AFTER Trans. No. 523930	6	1	2205 322	2205 322	
	SP2, SD2, SC1, SC2, SC3, SY1, UP TO Trans. No. 117651	8	1	---- ---	2124 860	2124 860

★ Indicates use as required. Numerals in parentheses ( ) refer to notes. Printed in U.S.A.
⊟ Indicates parts not listed in any previous parts book. Prices and specifications subject to change without notice.
* Indicates change or addition.

March 8, 1963 Supersedes May 1, 1962.

MyMopar.com

AUTOMATIC 3 - SPEED TRANSMISSION

CODE	PART NAME AND DESCRIPTION	CYL.	PER CAR	VALIANT LANCER	PLYMOUTH DODGE	CHRYSLER IMPERIAL
21-04-0	**TRANSMISSION CASE EXTENSION - Cont'd**					
21-04-2	GASKET - Cont'd					
	SP2, SD2, SC1, SC2, SC3, SY1, AFTER Trans., No. 117651, SD3	8	1	---- ---	2400 064	2400 064
21-04-6	BOLT, Extension, w/Nylon PELLET	8	1	---- ---	---- ---	⊟6023 515
21-04-11	BUSHING	6	1	2124 607	2124 607	
	BEARING	8	1	---- ---	1672 194	1672 194
21-04-12	SNAP RING, Bearing	8	1	---- ---	1736 432	1736 432
21-05-0	**TRANSMISSION OUTPUT SHAFT**					
21-05-1	SHAFT, w/PLUG	6	1	1942 413	2240 627	
		8	1	---- ---	2124 840	2124 840
21-05-12	OIL SEAL, Output Shaft	6	1	1942 401	1942 401	
		8	1	---- ---	2205 080	2205 080
21-05-19	SNAP RING, Output Shaft	6	1	6022 859	6022 859	
		8	1	---- ---	6022 816	6022 816
21-05-35	WASHER, Output Shaft Thrust, .052" thk., Natural, Fiber	6	1	1942 454	1942 454	
	.068" thk., Red, Fiber	6	1	1942 455	1942 455	
	.083" thk., Black, Fiber	6	1	1942 456	1942 456	
		8	1	---- ---	2125 104	2125 104
21-30-0	**TRANSMISSION GEARSHIFT BUTTON AND CABLE**					
21-30-28	SOCKET, Selector Bulb, w/CABLE, SP1, SP2, SD1, SD2		1	---- ---	2226 796	
	SD3, SC1, SC2, SC3	8	1	---- ---	2257 275	1885 977
	SY1	8	1	---- ---	---- ---	2197 939
21-30-320	HOUSING, w/SLIDES	6	1	2266 413		
	SP1, SP2, SD1, SD2		1	---- ---	2265 186	
	SD3	8	1	---- ---	1946 547	1946 547
21-30-325	ACTUATOR, Back-Up Light Switch, SD3	8	1	---- ---	1676 629	1676 629
	RIVET	8	1	---- ---	131 284	131 284
21-30-329	BRACKET, Reverse Slide Light Switch, SP1, SP2, SD1, SD2		1	2123 249	2123 249	
21-30-336	BUTTON, Neutral, SV1	6	1	2401 276		
	Drive, SV1	6	1	2401 277		
	First, SV1	6	1	2401 279		
	Second, SV1	6	1	2401 278		
	Reverse, SV1	6	1	2401 275		
	BUTTON, Neutral, SL1	6	1	2265 178		
	Drive, SL1	6	1	2265 179		
	First, SL1	6	1	2265 181		
	Second, SL1	6	1	2265 180		
	Reverse, SL1	6	1	2265 177		
	BUTTON, w/COVER, Neutral, SP1, SP2		1	---- ---	2260 858	
	Drive, SP1, SP2		1	---- ---	2260 859	
	First, SP1, SP2		1	---- ---	2260 861	
	Second, SP1, SP2		1	---- ---	2260 860	
	Reverse, SP1, SP2		1	---- ---	2260 857	

★ Indicates use as required. Numerals in parentheses ( ) refer to notes. Printed in U.S.A.
⊟ Indicates parts not listed in any previous parts book. Prices and specifications subject to change without notice.
March 8, 1963 Supersedes May 1, 1962. * Indicates change or addition.

MyMopar.com

AUTOMATIC 3 - SPEED TRANSMISSION

21-30-0 TRANSMISSION GEARSHIFT BUTTON AND CABLE - Cont'd

CODE	PART NAME AND DESCRIPTION	CYL.	PER CAR	VALIANT LANCER	PLYMOUTH DODGE	CHRYSLER IMPERIAL
21-30-336	BUTTON, w/COVER, Neutral, SD1, SD2		1	---- ---	2208 183	
	Drive, SD1, SD2		1	---- ---	2208 184	
	First, SD1, SD2		1	---- ---	2208 186	
	Second, SD1, SD2		1	---- ---	2208 185	
	Reverse, SD1, SD2		1	---- ---	2208 182	
	BUTTON, w/COVER, Neutral, SD3	8	1	---- ---	2200 884	
	Drive, SD3	8	1	---- ---	2200 885	
	First, SD3	8	1	---- ---	2200 887	
	Second, SD3	8	1	---- ---	2200 886	
	Reverse, SD3	8	1	---- ---	2200 883	
	BUTTON, w/COVER, Neutral, SC1, SC2, SC3	8	1	---- ---	---- ---	1946 505
	Drive, SC1, SC2, SC3	8	1	---- ---	---- ---	1946 508
	First, SC1, SC2, SC3	8	1	---- ---	---- ---	1946 514
	Second, SC1, SC2, SC3	8	1	---- ---	---- ---	1946 511
	Reverse, SC1, SC2, SC3	8	1	---- ---	---- ---	1946 502
	BUTTON, w/COVER, Neutral, SY1	8	1	---- ---	---- ---	2200 862
	Drive, SY1	8	1	---- ---	---- ---	2200 864
	First, SY1	8	1	---- ---	---- ---	2200 868
	Second, SY1	8	1	---- ---	---- ---	2200 866
	Reverse, SY1	8	1	---- ---	---- ---	2200 860
21-30-340	BUMPER, Slide		4	*1731 143	*1731 143	*1731 143
21-30-345	SPRING, Slide		5	1639 970	1639 970	1639 970
21-30-365	CABLE, Control, 42" lgh.	6	1	2266 403		
	44" lgh., SP1, SP2		1	---- ---	2266 404	
	42" lgh., SD1, SD2		1	---- ---	2266 403	
	48" lgh., w/361 cu. in. Engine	8	1	---- ---	*2266 405	
	48" lgh., SD3	8	1	---- ---	*2266 405	*2266 405
21-30-370	BRACKET, Cable, on Housing		1	1673 921	1673 921	1673 921
21-30-375	FLANGE or WHEEL, Control Cable Adjusting		1	1856 492	1856 492	1856 492
21-30-390	SEAL, Cable, on Trans.		1	1316 813	1316 813	1316 813
21-30-392	ADAPTER, Control Cable, w/PIN		1	1941 636	1941 636	1941 636
21-30-394	SPRING, Control Cable Adapter		1	1673 184	1673 184	1673 184

21-84-0 TRANSMISSION SPEEDOMETER CABLE, INCLUDES SHAFT AND HOUSING

21-84-1	HOUSING, w/SHAFT, 58" lgh.		1	2290 459		
	78" lgh., SP1, SP2, SD1, SD2		1	---- ---	2290 461	
	70" lgh., SD3	8	1	---- ---	2257 840	2257 840
	w/Auto. Pilot, 31 3/8" lgh.	8	1	---- ---	---- ---	1972 351
21-84-4	SHAFT, 58" lgh.	6	1	2290 469		
	78" lgh., SP1, SP2, SD1, SD2		1	---- ---	2290 471	
	64 43/64" lgh., SD3	8	1	---- ---	2209 229	2209 229
	28 5/32" lgh., w/Auto. Pilot	8	1	---- ---	---- ---	1887 657
	w/Auto. Pilot, 31 3/8" lgh.	8	1	---- ---	---- ---	1972 352
21-84-7	CLAMP, Cable		1	2204 942	2204 942	2204 942
21-84-28	SEAL, Cable Adapter		1	1942 259	1942 259	1942 259

★ Indicates use as required. Numerals in parentheses ( ) refer to notes. Printed in U.S.A.
⊟ Indicates parts not listed in any previous parts book. Prices and specifications subject to change without notice.
* Indicates change or addition.

March 8, 1963 Supersedes May 1, 1962.

MyMopar.com

AUTOMATIC 3 - SPEED TRANSMISSION

21-85-0 TRANSMISSION SPEEDOMETER PINION

21-85-5 PINION

6 CYLINDER CARS ONLY

Tire Size	2.76 to 1 Ratio Pinion	Teeth	2.93 to 1 Ratio Pinion	Teeth	3.23 to 1 Ratio Pinion	Teeth	3.31 to 1 Ratio Pinion	Teeth	3.55 to 1 Ratio Pinion	Teeth	3.91 to 1 Ratio Pinion	Teeth
6.50 x 13	---- ---	-- --	2204 356	17 O	2204 358	19 DB	---- ---	-- --	2204 359	20 G	2204 359	20 G
6.70 x 13	---- ---	-- --	2204 355	16 B	2204 356	17 O	---- ---	-- --	2204 358	19 DB	2204 360	21 GR
6.50 x 14	2204 355	16 B	2204 355	16 B	2204 357	18 DP	2204 358	19 DB	2204 359	20 G	2204 359	20 G
7.00 x 14	2204 355	16 B	2204 355	16 B	2204 357	18 DP	2204 357	18 DP	2204 358	19 DB	2204 360	21 GR
7.50 x 14	2204 355	16 B	2204 355	16 B	2204 356	17 O	2204 356	17 O	2204 358	19 DB	2204 360	21 GR
6.70 x 15	2204 355	16 B	2204 355	16 B	2204 356	17 O	2204 356	17 O	2204 357	18 DP	2204 359	20 G

8 CYLINDER CARS ONLY

Tire Size	2.76 to 1 Ratio Pinion	Teeth	2.93 to 1 Ratio Pinion	Teeth	3.23 to 1 Ratio Pinion	Teeth	w/Auto. Pilot 2.93 to 1 Ratio Pinion	Teeth	w/Auto. Pilot 3.23 to 1 Ratio Pinion	Teeth	3.91 to 1 Ratio Pinion	Teeth
7.00 x 14	2204 356	17 O	2204 357	18 DP	2204 359	20 C	---- ---	-- --	---- ---	-- --	---- ---	-- --
7.50 x 14	2204 356	17 O	2204 357	18 DP	2204 358	19 DB	---- ---	-- --	---- ---	-- --	*2204 360	21 GR
8.00 x 14	2204 355	16 B	2204 356	17 O	2204 358	19 DB	2204 358	19 DB	2204 360	21 GR	---- ---	-- --
8.50 x 14	2204 355	16 B	2204 356	17 O	2204 358	19 DB	2204 358	19 DB	2204 360	21 GR	---- ---	-- --
9.00 x 14	---- ---	-- --	2204 355	16 B	2204 357	18 DP	2204 358	19 DB	2204 359	20 G	---- ---	-- --
6.70 x 15	2204 355	16 B	2204 356	17 O	2204 358	19 DB	---- ---	-- --	---- ---	-- --	---- ---	-- --
7.60 x 15	---- ---	-- --	---- ---	-- --	2204 357	18 DP	---- ---	-- --	2204 359	20 G	---- ---	-- --
8.20 x 15	---- ---	-- --	2204 355	16 B	---- ---	-- --	2204 357	18 DP	---- ---	-- --	---- ---	-- --

COLOR OF PINIONS

B-BLUE DP-DARK PURPLE G-GREEN O-ORANGE DB-DARK BLUE GR-GRAY

CODE	PART NAME AND DESCRIPTION	CYL.	PER CAR	VALIANT LANCER	PLYMOUTH DODGE	CHRYSLER IMPERIAL
21-85-9	ADAPTER, Drive Pinion, w/3.91 to 1 ratio and 6.50 x 14" Tires	6	1	---- ---	2291 141	
	SP2, SD2, w/413 cu. in. Engine, w/7.50 x 14 Tires and 3.91 Ratio	8	1	---- ---	*2291 141	
21-85-56	SEAL, Pinion		1	2124 328	2124 328	2124 328
21-85-61	CLIP, Pinion		1	1942 174	1942 174	1942 174

21-113-0 TRANSMISSION NEUTRAL STARTER SWITCH

21-113-24	SWITCH PACKAGE, w/WASHER and "O" RING, on Trans.		1	1704 283	1704 283	1704 283
21-113-28	"O" RING, Mounting		1	1316 849	1316 849	1316 849
21-113-29	WASHER, Mounting		1	1704 482	1704 482	1704 482

21-117-0 TRANSMISSION OIL PUMP STRAINER

NOTE: See Code 9-46-27 for Tubes.

21-117-1	STRAINER		1	1949 964	1949 964	1949 964
	FILTER, Oil, Attached to Oil Pan		1	2400 124	2400 124	2400 124

MyMopar.com

AUTOMATIC 3 - SPEED TRANSMISSION

CODE	PART NAME AND DESCRIPTION	CYL.	PER CAR	VALIANT LANCER	PLYMOUTH DODGE	CHRYSLER IMPERIAL
21-117-0	**TRANSMISSION OIL PUMP STRAINER - Cont'd**					
21-117-2	CLAMP, Oil Filter		1	2268 908	2268 908	2268 908
21-117-3	BRACKET, Oil Filter	6	1	2400 126	2400 126	
		8	1	---- ---	2400 078	2400 078
21-118-0	**TRANSMISSION OIL PUMP**					
21-118-6	ROTOR PACKAGE, Front Pump	6	1	2240 302	2240 302	
	Rear Pump	6	1	2196 795	2196 795	
	Front Pump	8	1	---- ---	2275 497	2275 497
	Rear Pump	8	1	---- ---	2275 496	2275 496
21-118-7	ROTOR, Rear Pump, Outer		1	1672 296	1672 296	1672 296
21-118-40	HOUSING, Front Pump, w/BUSHING	6	1	2204 712	2204 712	
	Rear Pump	6	1	1942 463	1942 463	
	Front Pump, w/PLUGS	8	1	---- ---	2400 492	2400 492
	Rear Pump	8	1	---- ---	1942 105	1942 105
21-118-42	OIL SEAL, Front Pump Housing, 2 1/4" O.D.	6	1	2124 705	2124 705	
	2 5/8" O.D.	8	1	---- ---	1942 020	1942 020
21-118-45	OIL SEAL, Front Pump Housing, 8 17/64" O.D.	6	1	2204 709	2204 709	
	10" O.D.	8	1	---- ---	1942 021	1942 021
21-118-47	BUSHING, Front Pump Housing	6	1	2204 953	2204 953	
		8	1	---- ---	2205 041	2205 041
21-118-53	COVER, Rear Pump Housing		1	1942 107	1942 107	1942 107
21-118-54	GASKET, Front Pump Housing	8	1	---- ---	2124 846	2124 846
21-118-55	SCREW, Front Pump Housing, w/WASHER		★	2124 600	2124 600	2124 600
21-118-57	SHIELD, Front Pump Housing Vent	8	1	---- ---	2204 993	2204 993
21-119-0	**TRANSMISSION OIL PAN**					
21-119-3	PAN, Oil	6	1	2205 314	2205 314	
		8	1	---- ---	2124 865	2124 865
	SCREW		★	6023 355	6023 355	6023 355
21-119-5	GASKET, Oil Pan	6	1	2205 299	2205 299	
		8	1	---- ---	2124 867	2124 867
21-119-11	PLUG, Oil Pan Drain		1	863 986	863 986	863 986
21-119-12	GASKET, Drain Plug		1	863 987	863 987	863 987
21-119-15	TUBE, Oil Filler	6	1	2204 641	2204 641	
	SP2, SD2, w/318 cu. in. Engine	8	1	---- ---	*2204 788	
	SP2, SD2, w/361 and 383 cu. in. Engine	8	1	---- ---	*2204 716	
	SD3	8	1	---- ---	2204 929	2204 929
	SP2, SD2, w/413 cu. in. Engine	8	1	---- ---	⊟2400 652	
21-119-19	INDICATOR, Oil Level	6	1	2204 643	2204 643	
		8	1	---- ---	2204 799	2204 799
	SP2, SD2, w/413 cu. in. Engine	8	1	---- ---	⊟2400 655	
21-119-25	SEAL, Oil Filler Tube		1	1316 815	1316 815	1316 815

★ Indicates use as required. Numerals in parentheses ( ) refer to notes. Printed in U.S.A.
⊟ Indicates parts not listed in any previous parts book. Prices and specifications subject to change without notice.
* Indicates change or addition.

March 8, 1963 Supersedes May 1, 1962.

MyMopar.com

AUTOMATIC 3 - SPEED TRANSMISSION

CODE	PART NAME AND DESCRIPTION	CYL.	PER CAR	VALIANT LANCER	PLYMOUTH DODGE	CHRYSLER IMPERIAL
21-129-0	**TRANSMISSION INPUT SHAFT AND TORQUE CONVERTER REACTION SHAFT**					
21-129-5	SHAFT, Input, w/Rear Clutch Piston RETAINER . .	6	1	2125 201	2125 201	
	SHAFT, Input	6	1	2125 200	2125 200	
	SHAFT, Input, w/BUSHING.	8	1	---- ---	*2124 831	*2124 831
21-129-6	BUSHING, Input Shaft	8	1	---- ---	2205 242	2205 242
21-129-7	RING, Input Shaft Seal	6	2	1941 831	1941 831	
		8	2	---- ---	1942 041	1942 041
	SNAP RING, Input Shaft	6	1	6022 859	6022 859	
21-129-10	SHAFT, Reaction, w/SUPPORT, 27T., 6 5/8" lgh. .	6	1	1942 419	1942 419	
	27T., 6 5/8" lgh.	8	1	---- ---	2124 810	2124 810
21-129-13	RING, Reaction Shaft Support Seal	6	2	1942 389	1942 389	
		8	2	---- ---	2124 813	2124 813
21-129-23	BUSHING, Reaction Shaft	6	1	2205 302	2205 302	
		8	1	---- ---	2205 240	2205 240
21-129-24	GASKET, Reaction Shaft Support	6	1	1942 390	1942 390	
21-133-0	**TRANSMISSION CLUTCH**					
21-133-5	RETAINER, Front Clutch Piston, w/DISC, PISTON and SPRING	6	1	2205 326		
	Front Clutch, w/225 cu. in. Engine, Heavy Duty and Taxi	6	1	2204 979		
	Front Clutch	6	1	---- ---	2204 979	
	Front Clutch	8	1	---- ---	2124 814	2124 814
	Front, SP2, SD2, w/413 cu. in. Engine	8	1	---- ---	⊟2400 724	
21-133-7	RETAINER, Front Clutch Piston, w/BUSHING . . .	6	1	2205 325	2204 980	
	Front Clutch, w/225 cu. in. Engine, Heavy Duty and Taxi	6	1	2204 980		
	Front Clutch Piston, w/BUSHING	8	1	---- ---	2124 815	2124 815
	Rear Clutch Piston, 28T., 62T.	8	1	---- ---	*2124 833	*2124 833
	Rear Clutch, SD2	8	1	---- ---	2204 976	2124 836
	Rear Clutch, SP2, SD2, w/361 cu. in. Engine, SD3	8	1	---- ---	2124 836	
21-133-10	BUSHING, Front Clutch Retainer	6	1	2205 303	2205 303	
		8	1	---- ---	2205 241	2205 241
21-133-15	PISTON, Front Clutch	6	1	1942 395	1942 395	
	Rear Clutch	6	1	2125 198	2125 198	
	Front Clutch	8	1	---- ---	2124 819	2124 819
	Rear Clutch	8	1	---- ---	2204 645	2204 645
21-133-17	SEAL, Front Clutch Piston, Inner	6	1	1942 396	1942 396	
	Outer	6	1	1942 397	1942 397	
	Rear Clutch Piston, Inner	6	1	2125 187	2125 187	
	Outer	6	1	1942 397	1942 397	
	Front Clutch Piston, Inner	8	1	---- ---	2124 820	2124 820
	Outer	8	1	---- ---	2124 821	2124 821
	Rear Clutch Piston, Inner	8	1	---- ---	1942 054	1942 054
	Outer	8	1	---- ---	2124 835	2124 835
21-133-20	SPRING, Front Clutch Piston Return	6	1	2205 233	1942 467	
	Front Clutch, w/225 cu. in. Engine, Heavy Duty and Taxi	6	1	1942 467		

★ Indicates use as required. Numerals in parentheses ( ) refer to notes. Printed in U.S.A.
⊟ Indicates parts not listed in any previous parts book. Prices and specifications subject to change without notice.
March 8, 1963 Supersedes May 1, 1962. * Indicates change or addition.

MyMopar.com

AUTOMATIC 3 - SPEED TRANSMISSION

CODE	PART NAME AND DESCRIPTION	CYL.	PER CAR	VALIANT LANCER	PLYMOUTH DODGE	CHRYSLER IMPERIAL
21-133-0	**TRANSMISSION CLUTCH - Cont'd**					
21-133-20	SPRING - Cont'd					
	Rear Clutch	6	1	1942 414	1942 414	
	Front Clutch	8	10	---- ---	2124 822	2124 822
	Rear Clutch	8	1	---- ---	1942 015	1942 015
21-133-22	RETAINER, Front Clutch Piston Spring	6	1	1942 399	1942 399	
		8	1	---- ---	2124 823	2124 823
21-133-25	SNAP RING, Rear Clutch Piston Spring, 5 27/64" O.D.	6	1	1942 415	1942 415	
	Rear Clutch Piston Spring, 7 3/16" O.D.	8	1	---- ---	1942 057	1942 057
	Rear Clutch Piston Retainer, 1 5/16" O.D.	8	1	---- ---	2124 872	2124 872
21-133-36	DISC, Front Clutch Driving	6	★	2205 203	1942 404	
	Front Clutch Driving, w/225 cu. in. Engine, Heavy Duty and Taxi	6	4	1942 404		
	Rear Clutch Driving	6	3	1942 418	1942 418	
	Front Clutch Driving	8	4	---- ---	2124 827	2124 827
	Rear Clutch Driving	8	★	---- ---	2124 838	2124 838
	Front Clutch Driving, SP2, SD2, w/413 cu.in.Eng.	8	4	---- ---	⊟2400 725	
21-133-38	PLATE, Front Clutch	6	★	1942 403	1942 403	
	Rear Clutch	6	2	1942 403	1942 403	
	Front Clutch	8	4	---- ---	2124 826	2124 826
	Rear Clutch	8	★	---- ---	2124 826	2124 826
21-133-39	PLATE, Front Clutch Pressure	6	1	1942 402	1942 402	
	Rear Clutch Pressure, Front	6	1	1949 930	1949 930	
	Rear Clutch Pressure, Rear	6	1	1942 402	1942 402	
	Front Clutch Pressure	8	1	---- ---	2124 825	2124 825
	Rear Clutch Pressure, Front	8	1	---- ---	2124 837	2124 837
	Rear Clutch Prrssure, Rear	8	1	---- ---	2124 825	2124 825
21-133-40	GEAR, Sun, w/BUSHING	6	1	1942 434	1942 434	
		8	1	---- ---	1942 076	1942 076
21-133-42	SHELL, Sun Gear Driving	6	1	1942 438	1942 438	
		8	1	---- ---	2124 847	2124 847
21-133-43	SNAP RING, Front Clutch, Outer	6	1	1942 421	1942 421	
	Front Clutch, Inner	6	1	1942 400	1942 400	
	Rear Clutch Retainer, .060" thk.	6	★	1942 421	1942 421	
	Rear Clutch Retainer, .068" thk.	6	★	1942 422	1942 422	
	Rear Clutch Retainer, .076" thk.	6	★	1942 423	1942 423	
	Front Clutch, Inner, 3 1/4" O. D.	8	1	---- ---	2124 824	2124 824
	Front Clutch, 7" O. D.	8	1	---- ---	1942 063	1942 063
	Rear Clutch Retainer, .060" thk., 7" O. D.	8	★	---- ---	1942 063	1942 063
	Rear Clutch Retainer, .074" thk., 7" O. D.	8	★	---- ---	1942 064	1942 064
	Rear Clutch Retainer, .088" thk., 7" O. D.	8	★	---- ---	1942 065	1942 065
21-133-46	RING, Sun Gear Driving Shell Lock	6	2	1942 439	1942 439	
		8	2	---- ---	1736 521	1736 521
21-133-47	PLATE, Sun Gear Driving Shell Thrust	6	2	2124 258	2124 258	
		8	1	---- ---	1942 080	1942 080
21-133-48	WASHER, Sun Gear Driving Shell Thrust	6	2	2205 223	2205 223	
	Sun Gear Driving Shell Thrust, w/3 Tabs	8	1	---- ---	1942 081	1942 081

★ Indicates use as required. Numerals in parentheses ( ) refer to notes. Printed in U.S.A.
⊟ Indicates parts not listed in any previous parts book. Prices and specifications subject to change without notice.
* Indicates change or addition.

March 8, 1963 Supersedes May 1, 1962.

MyMopar.com

AUTOMATIC 3 - SPEED TRANSMISSION

CODE	PART NAME AND DESCRIPTION	CYL.	PER CAR	VALIANT LANCER	PLYMOUTH DODGE	CHRYSLER IMPERIAL
21-133-0	**TRANSMISSION CLUTCH - Cont'd**					
21-133-65	WASHER, Front Clutch Thrust, Front and Rear, Plastic	6	2	2204 369	2204 369	
	Front Clutch Thrust, Front, Natural, .043" thk.	8	★	---- ---	2204 621	2204 621
	Front Clutch Thrust, Front, Green, .061" thk.	8	★	---- ---	2204 622	2204 622
	Front Clutch Thrust, Front, Red, .084" thk.	8	★	---- ---	2204 623	2204 623
	Front Clutch Thrust, Front, Yellow, .102" thk.	8	★	---- ---	2400 284	2400 284
	Front Clutch Thrust, Rear, Green, .061" thk.	8	1	---- ---	2204 622	2204 622
21-134-0	**TRANSMISSION FRONT AND REAR PLANET PINION CARRIER AND COMPONENTS**					
21-134-5	CARRIER, w/PINIONS and WASHERS, Front	6	1	2298 931	2298 931	
	Rear	6	1	*2421 262	*2421 262	
	CARRIER, w/PINIONS, Front	8	1	---- ---	1942 070	1942 070
	Rear	8	1	---- ---	1942 074	1942 074
21-134-30	WASHER, Front and Rear Planet Pinion Carrier Thrust, w/3 Tabs	8	2	---- ---	1942 081	1942 081
21-134-36	SUPPORT, Front Annulus Gear	6	1	1942 446	1942 446	
	Rear Annulus	6	1	1942 450	1942 450	
21-134-38	GEAR, Front and Rear Annulus	6	2	1942 443	1942 443	
	Front Annulus	8	1	---- ---	2124 841	2124 841
	Rear Annulus	8	1	---- ---	1942 086	1942 086
21-134-40	SNAP RING, Front and Rear Annulus Gear	6	2	1942 444	1942 444	
	Front Annulus Gear Support	6	1	1942 448	1942 448	
21-134-45	WASHER, Front Annulus Gear Support Thrust	6	1	1942 447	1942 447	
21-136-0	**TRANSMISSION BANDS**					
21-136-5	BAND, Kickdown	6	1	2204 792	2204 792	
		8	1	---- ---	2124 342	2124 342
	SP2, SD2, w/413 cu. in. Engine	8	1	---- ---	⊟2400 726	
21-136-15	STRUT, Kickdown Band	6	1	1630 896	1630 896	
	STRUT, Kickdown Band	8	1	---- ---	2124 848	2124 848
	ANCHOR, Kickdown Band	8	1	---- ---	1942 120	1942 120
21-136-17	SCREW, Kickdown Band Adjusting	6	1	1942 477	1942 477	
	UP TO Trans. No. 321977	8	1	---- ---	*1736 215	*1736 215
	AFTER Trans. No. 321977	8	1	---- ---	⊟2400 389	⊟2400 389
21-136-20	LEVER, Kickdown Band	6	1	2204 952		
	w/225 cu. in. Engine, Heavy Duty and Taxi	6	1	2125 067		
		6	1	---- ---	2125 067	
	w/318 cu. in. Engine	8	1	---- ---	*2204 952	
	SP2, SD2, w/361 and 383 cu. in. Engine	8	1	---- ---	*2125 067	
	SD3	8	1	---- ---	2125 067	2125 067
	SP2, SD2, w/413 cu. in. Engine	8	1	---- ---	*2124 579	
21-136-23	SHAFT, Kickdown Band Lever		1	1942 132	1942 132	1942 132
21-136-30	BAND, Reverse	6	1	1942 487	1942 487	
		8	1	---- ---	1942 133	1942 133
21-136-41	ANCHOR, Reverse Band	6	1	1942 496	1942 496	
	STRUT, Reverse Band	6	1	1942 497	1942 497	
	STRUT, Reverse Band	8	1	---- ---	2204 823	2204 823

MyMopar.com

AUTOMATIC 3 - SPEED TRANSMISSION

CODE	PART NAME AND DESCRIPTION	CYL.	PER CAR	VALIANT LANCER	PLYMOUTH DODGE	CHRYSLER IMPERIAL
21-136-0	**TRANSMISSION BANDS - Cont'd**					
21-136-44	LINK, Reverse Band	6	1	1942 494	1942 494	
	w/ANCHOR	8	2	---- ---	2204 820	2204 820
21-136-47	LEVER, Reverse Band, w/STEM	6	1	1942 491	1942 491	
	Reverse Band, Short	6	1	1942 140	1942 140	
	w/STEM	8	1	---- ---	1942 137	1942 137
	Short	8	1	---- ---	2124 493	2124 493
21-136-49	SHAFT, Reverse Band Lever	6	1	1942 493	1942 493	
		8	1	---- ---	2124 857	2124 857
21-136-52	SCREW, Reverse Band Adjusting	6	1	1942 543	1942 543	
		8	1	---- ---	1942 141	1942 141
21-136-55	SEAL, Reverse Band Lever Shaft	8	1	---- ---	1550 711	1550 711
21-136-65	DRUM, Reverse	6	1	1942 451	1942 451	
		8	1	---- ---	2124 843	2124 843
21-136-228	CAM and RETAINER PACKAGE, "O" Running Clutch	6	1	2279 960	2279 960	
21-136-229	WASHER, Cam Screw	6	5	1823 543	1823 543	
21-136-231	CAM, "O" Running Clutch	8	1	---- ---	1942 095	1942 095
21-136-232	RACE, "O" Running Clutch	6	1	⊟2400 365	⊟2400 365	
		8	1	---- ---	2124 844	2124 844
21-136-233	RETAINER, "O" Running Clutch Spring	8	1	---- ---	1942 096	1942 096
21-136-235	ROLLER, "O" Running Clutch Cam	6	10	670 776	670 776	
		8	12	---- ---	670 776	670 776
21-136-236	SPRING, "O" Running Clutch Cam Roller	6	10	1942 187	1942 187	
		8	12	---- ---	1942 187	1942 187
21-136-237	WASHER, "O" Running Clutch Race Thrust, UP TO Trans. No. 541302	6	1	*2204 727	*2204 727	
	AFTER Trans. No. 541302	6	1	⊟2400 528	⊟2400 528	
21-137-0	**TRANSMISSION SERVOS**					
21-137-5	PISTON, Kickdown Servo	6	1	1942 478	1942 478	
		8	1	---- ---	2124 850	2124 850
21-137-8	RING, Kickdown Servo Piston Seal, Small	6	1	1672 287	1672 287	
	Large	6	1	1636 470	1636 470	
	Kickdown Servo Guide Seal	6	1	1636 470	1636 470	
	Kickdown Servo Piston Seal, Small	8	1	---- ---	2124 851	2124 851
	Large	8	1	---- ---	1942 123	1942 123
	Kickdown Servo Guide Seal	8	1	---- ---	1942 123	1942 123
21-137-11	ROD, Kickdown Servo Piston	6	1	1942 482	1942 482	
		8	1	---- ---	2124 853	2124 853
21-137-13	GUIDE, Kickdown Servo Piston Rod	6	1	1942 485	1942 485	
		8	1	---- ---	2124 856	2124 856
21-137-19	SNAP RING, Kickdown Servo Piston Rod Guide	6	1	1942 486	1942 486	
		8	1	---- ---	1942 130	1942 130

MyMopar.com

AUTOMATIC 3 - SPEED TRANSMISSION

CODE	PART NAME AND DESCRIPTION	CYL.	PER CAR	VALIANT LANCER	PLYMOUTH DODGE	CHRYSLER IMPERIAL
21-137-0	**TRANSMISSION SERVOS - Cont'd**					
21-137-22	SPRING, Kickdown Servo Piston	6	1	1942 481	1942 481	
	Inner	8	1	---- ---	2124 852	2124 852
	Outer	8	1	---- ---	2125 069	2125 069
	Inner SP2, SD2, w/413 cu. in. Engine	8	1	---- ---	⊟2400 729	
21-137-35	PISTON, Reverse Servo	6	1	1942 498	1942 498	
		8	1	---- ---	1942 147	1942 147
21-137-41	SPRING, Reverse Servo Piston Cushion		1	1823 941	1823 941	1823 941
21-137-44	SNAP RING, Reverse Servo Piston Plug		1	1823 940	1823 940	1823 940
21-137-47	PLUG, Reverse Servo Piston		1	1942 152	1942 152	1942 152
21-137-50	RING, Reverse Servo Piston Seal, Rubber	6	1	1942 499	1942 499	
		8	1	---- ---	1942 148	1942 148
21-137-53	SPRING, Reverse Servo Piston	6	1	1942 458	1942 458	
		8	1	---- ---	1942 149	1942 149
21-137-56	RETAINER, Reverse Servo Piston Spring	6	1	1942 501	1942 501	
		8	1	---- ---	1942 150	1942 150
21-137-59	SNAP RING, Reverse Servo Piston Spring Retainer	6	1	1942 502	1942 502	
		8	1	---- ---	1942 130	1942 130
21-137-200	PISTON, Accumulator		1	1942 153	1942 153	1942 153
21-137-202	RING, Accumulator Piston Seal, Small		1	1941 831	1941 831	1941 831
	Large		1	2124 255	2124 255	2124 255
21-137-205	SPRING, Accumulator Piston	6	1	1942 156	1942 156	
		8	1	---- ---	2125 109	2125 109
21-138-0	**TRANSMISSION GOVERNOR**					
21-138-2	REPAIR PACKAGE, Governor	6	1	2196 998	2196 998	
		8	1	---- ---	2275 498	2275 498
	SP2, SD2, w/361 and 383 cu. in. Engine, SC1 Police Cars w/383 cu. in. Engine, SC2 w/413 cu. in. Engine	8	1	---- ---	*2298 514	*2298 514
	SP2, SD2, w/413 cu. in. Engine	8	1	---- ---	⊟2421 377	
21-138-7	SNAP RING, Governor Body	6	1	6022 583	6022 583	
		8	1	---- ---	6022 817	6022 817
21-138-10	SUPPORT, Governor	6	1	1942 466	1942 466	
	SP2, SD2	8	1	---- ---	1942 108	
	SD3	8	1	---- ---	1949 838	1949 838
21-138-13	WEIGHT, Governor, Outer		1	1636 461	1636 461	1636 461
	Inner		1	1636 462	1636 462	1636 462
	Inner SP2, SD2, w/413 cu. in. Engine	8	1	---- ---	⊟2400 705	
21-138-15	SPRING, Governor Weight	6	1	2124 662		
	w/225 cu. in. Engine, Heavy Duty and Taxi	6	1	1949 858		
			1	---- ---	1949 858	1949 858
	SP2, SD2, w/361, 383 and 413 cu. in. Engine, SC1 Police Cars w/383 cu. in. Engine, SC2 w/413 cu. in. Engine	8	1	---- ---	*1949 859	*1949 859

★ Indicates use as required. Numerals in parentheses ( ) refer to notes. Printed in U.S.A.
⊟ Indicates parts not listed in any previous parts book. Prices and specifications subject to change without notice.
March 8, 1963 Supersedes May 1, 1962. * Indicates change or addition.

MyMopar.com

AUTOMATIC 3 - SPEED TRANSMISSION

CODE	PART NAME AND DESCRIPTION	CYL.	PER CAR	VALIANT LANCER	PLYMOUTH DODGE	CHRYSLER IMPERIAL
21-138-0	**TRANSMISSION GOVERNOR - Cont'd**					
21-138-19	SNAP RING, Governor Weight, Outer		1	1636 465	1636 465	1636 465
	Inner		1	1636 464	1636 464	1636 464
21-138-21	LOCK, Body Bolt		2	2125 024	2125 024	2125 024
21-138-23	VALVE, Governor		1	2124 663	2124 663	2124 663
21-138-26	SHAFT, Governor Valve		1	1556 082	1556 082	1556 082
21-138-29	SNAP RING, Governor Valve Shaft		2	1638 461	1638 461	1638 461
21-138-38	RING, Governor Support Seal		2	1942 109	1942 109	1942 109
21-139-0	**TRANSMISSION VALVE BODY AND VALVES**					
21-139-4	BODY, w/Transfer PLATE	6	1	*2400 430	*2400 430	
		8	1	---- ---	*2400 431	*2400 431
21-139-9	VALVE, Manual		1	1942 211	1942 211	1942 211
21-139-12	LEVER, Manual Valve		1	1942 223	1942 223	1942 223
21-139-24	SPRING, Manual Valve Lever Detent		1	1942 225	1942 225	1942 225
21-139-30	VALVE, Throttle		1	1636 423	1636 423	1636 423
21-139-33	SPRING, Throttle Valve		1	1949 847	1949 847	1949 847
21-139-47	SEAL, Throttle Lever Shaft		1	*2205 300	*2205 300	*2205 300
21-139-48	WASHER, Throttle Lever Shaft		1	1949 565	1949 565	1949 565
21-139-49	SNAP RING, Throttle Valve Lever Shaft		1	1539 430	1539 430	1539 430
21-139-50	LEVER, Throttle Valve		1	1949 652	1949 652	1949 652
21-139-63	PLUG, Regulator Valve Throttle Pressure		1	1942 245	1942 245	1942 245
	Regulator Valve Line Pressure		1	1942 218	1942 218	1942 218
21-139-64	SLEEVE, Regulator Valve Line Pressure Plug		1	1942 213	1942 213	1942 213
21-139-67	VALVE, Regulator		1	2124 733	2124 733	2124 733
21-139-68	SPRING, Regulator Valve		1	2124 734	2124 734	2124 734
21-139-71	RETAINER, Regulator Valve Spring		1	2124 735	2124 735	2124 735
21-139-74	SCREW, Line Pressure Adjusting		1	2124 736	2124 736	2124 736
	Throttle Pressure Adjusting	8	1	---- ---	6023 343	6023 343
21-139-76	NUT, Line Pressure Adjusting Screw		1	2124 737	2124 737	2124 737
	Throttle Pressure Adjusting Screw Lock		1	1949 523	1949 523	1949 523
21-139-78	VALVE, Kickdown		1	1941 623	1941 623	1941 623
	PLUG, Kickdown Detent		1	1941 624	1941 624	1941 624
21-139-95	VALVE, Shuttle		1	1854 275	1854 275	1854 275
	PLUG, Shuttle Valve		1	1854 274	1854 274	1854 274
21-139-98	SNAP RING, Shuttle Valve		1	1539 430	1539 430	1539 430
21-139-101	SPRING, Shuttle Valve		1	2124 697	2124 697	2124 697

★ Indicates use as required. Numerals in parentheses ( ) refer to notes. Printed in U.S.A.
⊟ Indicates parts not listed in any previous parts book. Prices and specifications subject to change without notice.
* Indicates change or addition.

MyMopar.com

AUTOMATIC 3 - SPEED TRANSMISSION

21-139-0 TRANSMISSION VALVE BODY AND VALVES - Cont'd

CODE	PART NAME AND DESCRIPTION	CYL.	PER CAR	VALIANT LANCER	PLYMOUTH DODGE	CHRYSLER IMPERIAL
21-139-105	VALVE, 1-2 Shift		1	1941 602	1941 602	1941 602
	PLUG, 1-2 Shift Valve		1	1941 603	1941 603	1941 603
	VALVE, 2-3 Shift		1	1941 600	1941 600	1941 600
	PLUG, 2-3 Shift Valve		1	1941 601	1941 601	1941 601
21-139-108	SPRING, 1-2 Shift Valve		1	2204 547	2204 547	2204 547
	2-3 Shift Valve		1	1942 231	1942 231	1942 231
21-139-117	VALVE, Torque Converter Control		1	2124 256	2124 256	2124 256
21-139-118	SPRING, Torque Converter Control Valve		1	2124 257	2124 257	2124 257
21-139-135	COVER, Regulator Valve		1	2205 034	2205 034	2205 034
	Shift Valve		1	1942 228	1942 228	1942 228
	Shift Valve Plug		1	1942 230	1942 230	1942 230
	Shuttle Valve		1	1942 227	1942 227	1942 227
	Reverse Blocker Valve		1	2205 034	2205 034	2205 034
21-139-140	PLATE, Valve Body	6	1	2205 053	2205 053	
		8	1	---- ---	2204 576	2204 576
21-139-143	VALVE, Front and Rear Pump Check		2	2124 552	2124 552	2124 552
21-139-144	SPRING, Front and Rear Pump Check Valve		2	1942 233	1942 233	1942 233
21-139-147	PLATE, Transfer, UP TO Trans. No. 550203	6	1	*2204 893		
	AFTER Trans. No. 550203	6	1	⊟2400 339		
		6	1	---- ---	*2204 893	
		8	1	---- ---	2205 182	2205 182
21-139-154	SUPPORT, Transfer Plate		1	1942 237	1942 237	1942 237
21-139-189	VALVE PACKAGE, Reverse Blocker, w/SEAL and SPRING		1	2275 523	2275 523	2275 523
21-139-191	SEAL, Reverse Blocker Valve		1	2204 885	2204 885	2204 885
21-139-193	SPRING, Reverse Blocker		1	2204 890	2204 890	2204 890

21-142-0 TRANSMISSION CONTROL LEVERS

21-142-12	LEVER, Throttle Control	6	1	2120 817	2264 701	
	SP2, SD2, SC1, SC2, SC3	8	1	---- ---	*2264 744	*2206 397
	SY1	8	1	---- ---	---- ---	2264 602
	SD3	8	1	---- ---	*2206 397	
21-142-20	INSULATOR, Throttle Control Lever Sound		1	1859 767	*1859 767	1859 767
21-142-21	BUSHING, Throttle Control Lever		1	1859 768	*1859 768	1859 768

NOTES

★ Indicates use as required. Numerals in parentheses ( ) refer to notes. Printed in U.S.A.
⊟ Indicates parts not listed in any previous parts book. Prices and specifications subject to change without notice.
May 1, 1962. * Indicates change or addition.

MyMopar.com

GROUP 22 - WHEELS

PARTS INDICATED BY NAME ONLY - ORDER BY DESCRIPTION

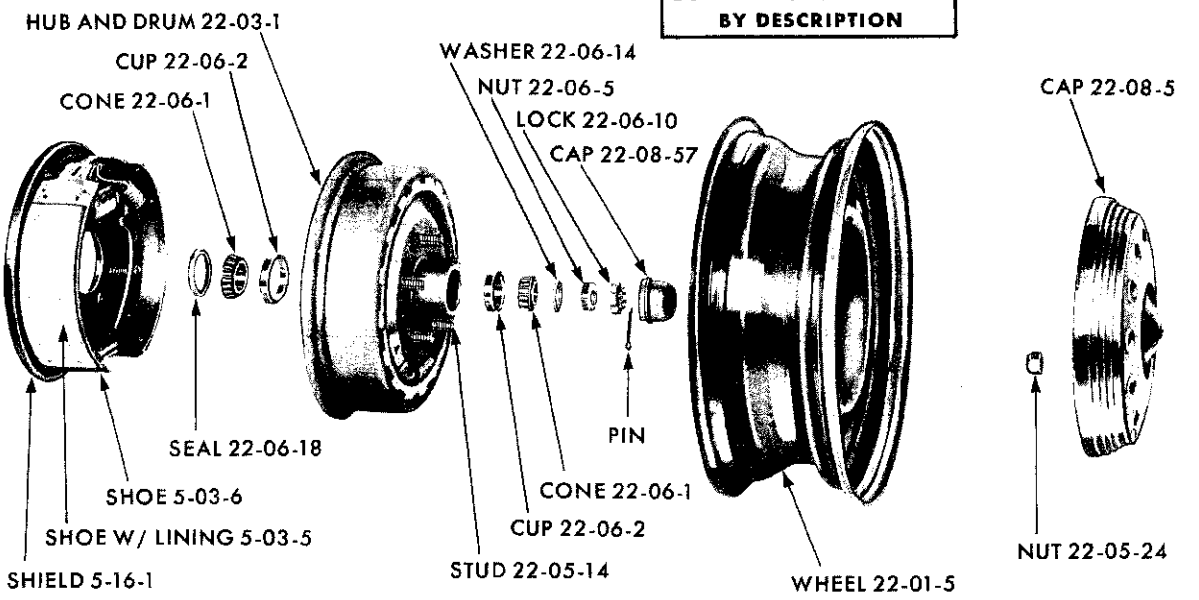

19x8785A

FRONT WHEEL - VALIANT SV1 AND LANCER SL1

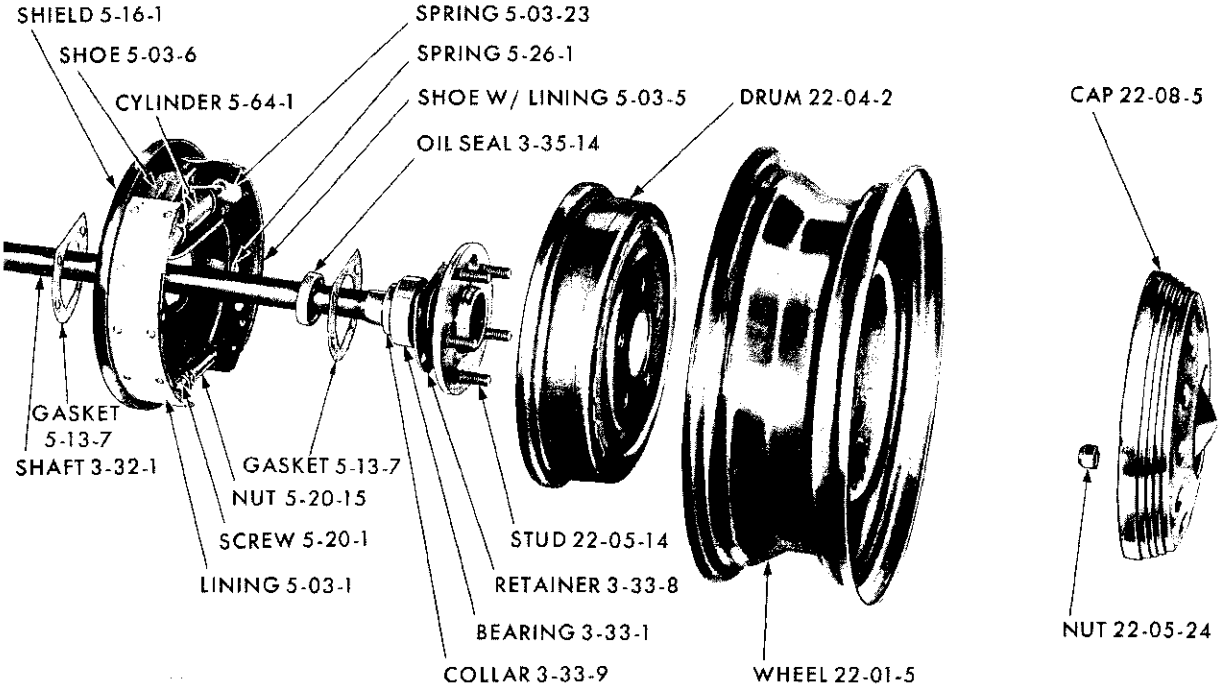

19x8787B

REAR WHEEL - VALIANT SV1 AND LANCER SL1

MyMopar.com

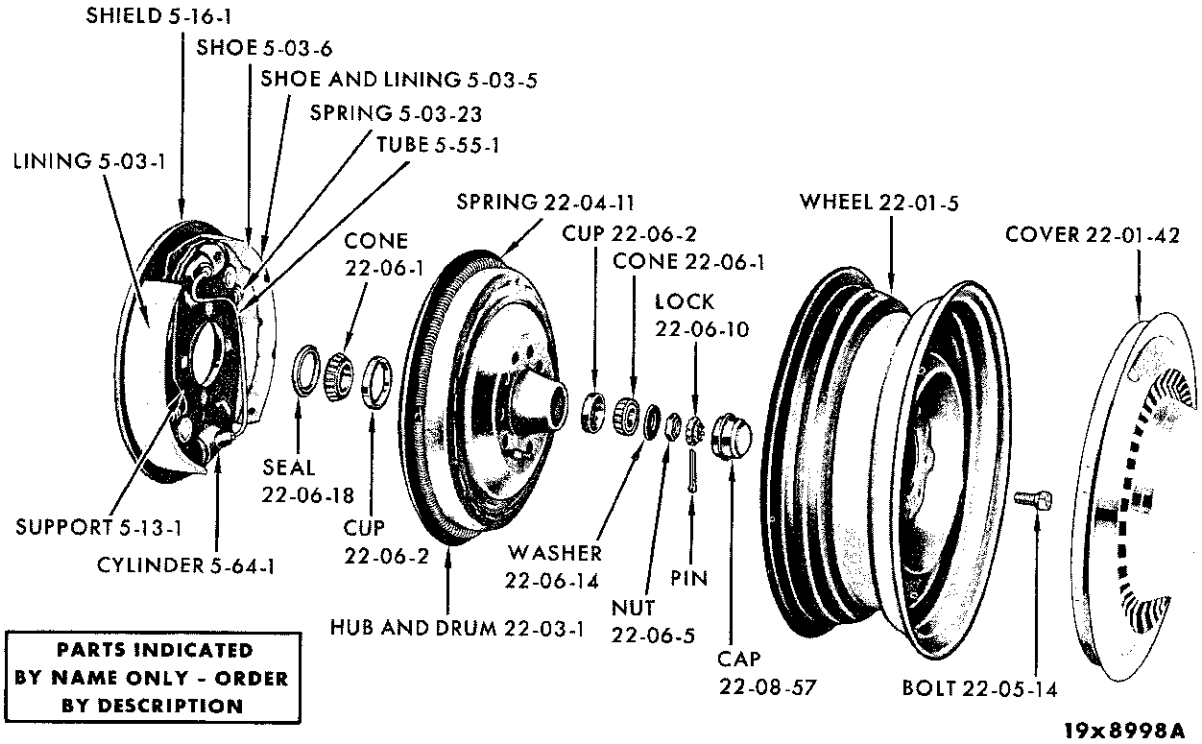

FRONT WHEEL - CHRYSLER SC1-2-3

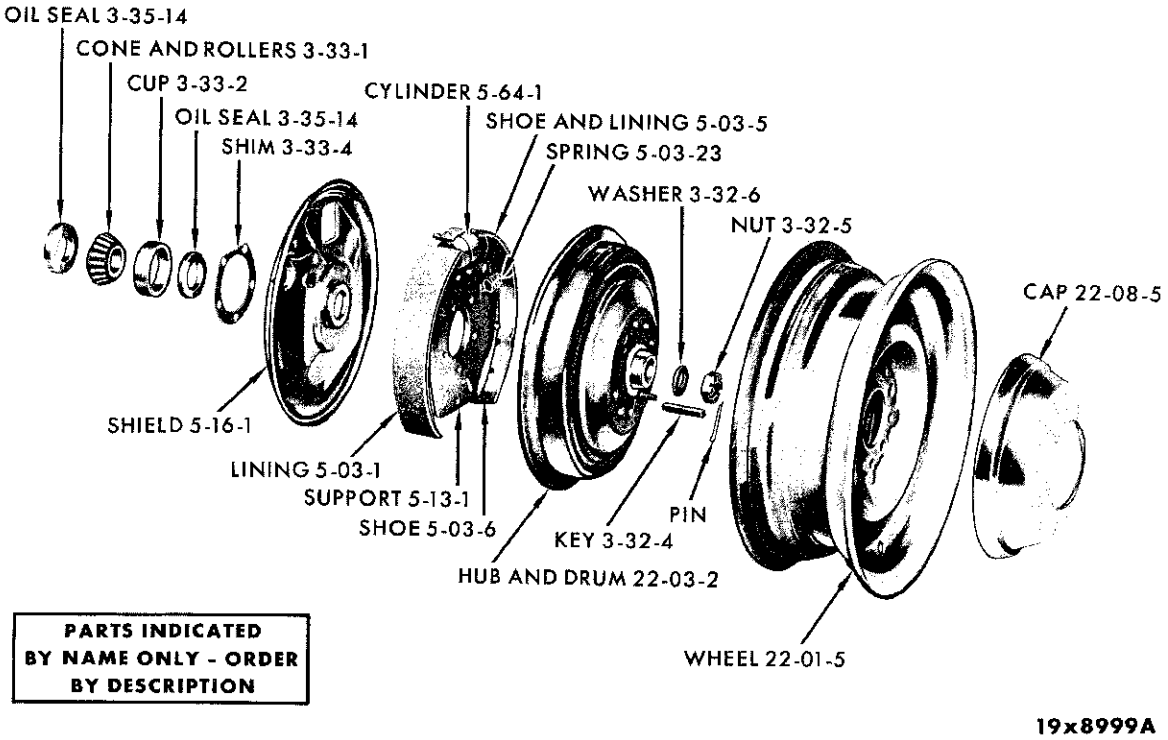

REAR WHEEL - CHRYSLER SC1

MyMopar.com

22-01-0 WHEELS

TIRE CHART

Wheel Size	Tire Size
13 x 4.50	6.50 x 13
14 x 5.00	6.50 x 14 - 7.00 x 14 - 7.50 x 14
14 x 5.50	7.00 x 14 - 7.50 x 14 - 8.00 x 14
14 x 6.00	8.00 x 14 - 8.50 x 14
14 x 6.50	9.00 x 14
15 x 5.50	6.70 x 15
15 x 6.00	7.60 x 15
15 x 6.00	7.60 x 15 - 8.00 x 15 - 8.20 x 15

CODE	PART NAME AND DESCRIPTION	CYL.	PER CAR	VALIANT LANCER	PLYMOUTH DODGE	CHRYSLER IMPERIAL
22-01-5	WHEEL, 13 x 4.50		5	2073 342		
	14 x 5.00 except Sub., SP1, SP2, SD1, SD2		5	---- ---	2298 522	
	14 x 5.50, SP1, SP2, SD1, SD2		5	---- ---	2298 523	
	14 x 5.50, SD3, SC1	8	5	---- ---	2084 628	2084 628
	15 x 5.50		5	---- ---	1856 808	
	14 x 6.00, SD3, SC1, SC2, SC3 except Sub.	8	5	---- ---	2275 898	2275 898
	14 x 6.50, SC3 Sub.		5	---- ---	---- ---	2122 468
	15 x 6.00, SC1, SC2, SC3	8	5	---- ---	---- ---	2200 928
	15 x 6.00, SY1		5	---- ---	---- ---	*1948 155
	15 x 6.50, SC3, Ambulance and Limousine	8	5	---- ---	---- ---	2260 158
22-01-42	COVER, Wheel, SV1-L, SV1-H	6	4	2266 135		
	SV1-P	6	4	2266 836		
	SL1-L, SL1-H	6	4	2266 143		
	SL1-P	6	4	2266 144		
	SP1, SP2-L, SP2-H		4	---- ---	2207 626	
	SP2-P, w/9 Ripples, AFTER Cars	8	4	---- ---	2265 638	
	SP2-P, Plain, UP TO Cars	8	4	---- ---	2401 958	
	SD1, SD2-L, SD2-H		4	---- ---	2266 136	
	SD2-P, SD3	8	4	---- ---	2266 834	
	SC1, SC3, Police and Ambulance, 15" Wheel	8	4	---- ---	---- ---	2260 160
	SC1, SC2, SC3, 14" Wheel		4	---- ---	---- ---	*2266 137
	SC2, 15" Wheel "300"		4	---- ---	---- ---	2265 535
	SY1		4	---- ---	---- ---	2266 139
22-01-43	MEDALLION, Wheel Cover, SC2 "300"		4	---- ---	---- ---	1828 420
	SPINNER, Cover Dome, SD2-P, SD3		4	---- ---	2266 831	
22-01-49	RETAINER, Wheel Cover, SC2 "300"		4	---- ---	---- ---	1829 625
22-01-51	DOME, Wheel Cover, SD2-P, SD3, SC2		4	---- ---	2266 832	1829 624
	SY1		4	---- ---	---- ---	2265 531

22-03-0 HUB AND BRAKE DRUM

22-03-1	HUB and BRAKE DRUM, Front, Cal. Blt., Right	6	1	*2072 794		
	Left	6	1	2072 795		
	Detroit Blt., Right	6	1	*2260 534		
	Left	6	1	2260 535		
	Except Detroit and Cal. Blt., Right	6	1	*2267 080		
	Left	6	1	*2267 081		
	10" x 2 1/2" Cal. Blt., Right, SP1, SP2, SD1, SD2		1	---- ---	2266 384	
	Left		1	---- ---	2266 385	
	10" x 2 1/2" Detroit Dodge Blt., Right, SD1, SD2		1	---- ---	2266 386	
	Left		1	---- ---	2266 387	

★ Indicates use as required. Numerals in parentheses ( ) refer to notes. Printed in U.S.A.
⊟ Indicates parts not listed in any previous parts book. Prices and specifications subject to change without notice.
* Indicates change or addition.

March 8, 1963 Supersedes May 1, 1962.

MyMopar.com

CODE	PART NAME AND DESCRIPTION	CYL.	PER CAR	VALIANT LANCER	PLYMOUTH DODGE	CHRYSLER IMPERIAL
22-03-0	**HUB AND BRAKE DRUM - Cont'd**					
22-03-1	HUB and BRAKE DRUM - Cont'd					
	10" x 2 1/2" except Cal. and Detroit Dodge Blt., Right, SP1, SP2, SD1, SD2		1	---- ---	2266 382	
	Left		1	---- ---	2266 383	
	11" x 3", Right, SP1, SP2, SD1, SD2		1	---- ---	2266 390	
	Left		1	---- ---	2266 391	
	11" x 2 1/2" Right, SD3, SC1, except Sub.		1	---- ---	2401 022	2401 022
	Left		1	---- ---	2401 023	2401 023
	12" x 2 1/2", SD3, SC1, SC2, SC3, Right		1	---- ---	2275 434	2275 434
	Left		1	---- ---	2275 433	2275 433
	Right, SY1		1	---- ---	---- ---	2265 218
	Left, SY1		1	---- ---	---- ---	2265 219
22-03-2	HUB and BRAKE DRUM, Rear, 10" x 2 1/2" Brakes, Right, Steel Encased, SP1, SP2, SD1, SD2		1	---- ---	2260 904	
	Left, Steel Encased		1	---- ---	2260 905	
	10 x 2 1/2" Brakes, Right, Cast Iron, SP1, SP2, SD1, SD2		1	---- ---	2265 550	
	Left, Cast Iron		1	---- ---	2265 551	
	11 x 2 1/2" Brakes, Right, SP1, SP2, SD1, SD2		1	---- ---	2265 354	
	Left		1	---- ---	2265 355	
	11 x 2 1/2" Brakes, Right, SD3, SC1, except Sub.		1	---- ---	2401 000	2401 000
	Left		1	---- ---	2401 001	2401 001
	12 x 2 1/2" Brakes, Right, SD3, SC1, SC2, SC3		1	---- ---	1732 512	1732 512
	Left		1	---- ---	1732 513	1732 513
	12" x 2 1/2" Brakes, Right, SY1		1	---- ---	---- ---	1732 296
	Left, SY1		1	---- ---	---- ---	1732 297
22-04-0	**BRAKE DRUM**					
22-04-2	DRUM, Rear, Steel Encased	6	2	*2267 083		
	Cast-Iron	6	2	2260 538		
22-04-4	SEAL, Front Wheel Brake Drum, SC1	8	2	---- ---	---- ---	2265 373
22-04-11	SPRING, Front Wheel Brake Drum Dampener	6	2	*2266 298		
	w/379 Coils, 35 3/16" SD3		★	---- ---	1142 258	1142 258
	w/344 Coils 32", SD3		★	---- ---	1142 259	1142 259
	10" Brakes		★	---- ---	1142 316	
22-04-14	RETAINER, Drum to Axle Shaft	6	★	*2072 676		
22-05-0	**WHEEL HUB**					
22-05-14	STUD, Front, Right, Cal. Blt.	6	5	*2265 390		
	Left	6	5	2265 391		
	Front, Right, Detroit Blt.	6	5	2260 540		
	Left	6	5	2260 541		
	Front, Right, except Detroit and Cal. Blt.	6	5	2072 750		
	Left	6	5	2072 751		
	Rear, Right	6	5	*2070 158		
	Left	6	5	2070 159		
	10" x 2 1/2" Brake, Cal. Blt., Right		10	---- ---	*2267 072	
	Left		10	---- ---	2267 073	
	10" x 2 1/2" Brake, Detroit Dodge Blt., Right		10	---- ---	1799 554	
	Left		10	---- ---	1799 555	
	10" x 2 1/2" Brake, except Cal. and Detroit Dodge Blt., Right		10	---- ---	1633 050	
	Left		10	---- ---	1633 051	

★ Indicates use as required. Numerals in parentheses ( ) refer to notes. Printed in U.S.A.
⊟ Indicates parts not listed in any previous parts book. Prices and specifications subject to change without notice.
March 8, 1963 Supersedes May 1, 1962. * Indicates change or addition.

MyMopar.com

CODE	PART NAME AND DESCRIPTION	CYL.	PER CAR	VALIANT LANCER	PLYMOUTH DODGE	CHRYSLER IMPERIAL
22-05-0	**WHEEL HUB - Cont'd**					
22-05-14	STUD - Cont'd					
	12" Right, SD3, SC1, SC2, SC3		10	---- ---	1633 050	1633 050
	Left		10	---- ---	1633 051	1633 051
	11" Right, SD3, SC1, except Sub.		10	---- ---	*2122 208	*2122 208
	Left		10	---- ---	*2122 209	*2122 209
	Right, SY1		10	---- ---	---- ---	1633 052
	Left, SY1		10	---- ---	---- ---	1633 053
22-05-24	NUT, Wheel Mtg. Right	6	10	2072 728		
	Left	6	10	2072 729		
	Wheel Driving, Right, SC1, SC2, SC3		10	---- ---	1139 316	1139 316
	Left, SC1, SC2, SC3		10	---- ---	1139 317	1139 317
	Right, SY1	8	10	---- ---	---- ---	1315 697
	Left, SY1	8	10	---- ---	---- ---	1315 698
22-06-0	**FRONT WHEEL BEARING**					
22-06-1	CONE and ROLLER, Inner, SC1, SC2, SC3		2	2203 352	1619 701	1619 701
	Outer, SC1, SC2, SC3		2	2203 350	1619 703	1619 703
	Inner, SY1	8	2	---- ---	---- ---	1789 755
	Outer, SY1	8	2	---- ---	---- ---	1790 241
22-06-2	CUP, Inner, SC1, SC2, SC3		2	2203 353	1619 700	1619 700
	Outer, SC1, SC2, SC3		2	2203 351	1619 702	1619 702
	Inner, SY1		2	---- ---	---- ---	1789 754
	Outer, SY1		2	---- ---	---- ---	1790 244
22-06-5	NUT		2	2072 731	1732 300	1732 300
22-06-10	LOCK, Nut		2	1673 324	1673 324	1673 324
22-06-14	WASHER, Nut Thrust		2	2072 733	600 194	600 194
22-06-18	SEAL, Hub Dust, SP1, SP2, SD1, SD2		2	2072 707	2266 378	---- ---
	SD3, SC1, SC2, SC3		2	---- ---	*1613 409	*1613 409
	SY1	8	2	---- ---	---- ---	*1671 340
22-08-0	**HUB CAP**					
22-08-5	CAP, SV1		4	2073 361		
	SL1		4	2208 050		
	14" Wheel, SC1		4	---- ---	2266 123	2266 123
	15" Wheel		4	---- ---	1943 733	1943 733
22-08-17	CLIP, Spring, SC2		25	---- ---	1316 017	1316 017
22-08-57	CAP, Grease, SC1, SC2, SC3		2	2072 718	1613 416	1613 416
	SY1		2	---- ---	---- ---	1671 341
22-09-0	**WHEEL BALANCE WEIGHT**					
22-09-1	WEIGHT, 1/2 oz.		★	---- ---	1615 349	1615 349
	1 oz.		★	---- ---	1615 350	1615 350
	1 1/2 oz.		★	---- ---	1615 351	1615 351
	2 oz.		★	---- ---	1615 352	1615 352
	2 1/2 oz.		★	---- ---	1615 353	1615 353
	3 oz.		★	---- ---	1615 354	1615 354
22-20-0	**SPARE WHEEL CARRIER**					
22-20-29	BRACKET, Mtg.	6	1	2083 190		
	Spare Wheel Anchor Bolt, except Sub., SP1, SP2, SD1, SD2		1	---- ---	2254 611	
	SP1, SP2, SD1, SD2, Sub.		1	---- ---	2254 646	
	Floor Pan Spare Wheel Anchor Bar, SP1, SP2, SD1, SD2, Sub. and Cv. Cp.		1	---- ---	2254 646	

★ Indicates use as required. Numerals in parentheses ( ) refer to notes. Printed in U.S.A.
⊟ Indicates parts not listed in any previous parts book. Prices and specifications subject to change without notice.
* Indicates change or addition.

March 8, 1963 Supersedes May 1, 1962.

MyMopar.com

CODE	PART NAME AND DESCRIPTION	CYL.	PER CAR	VALIANT LANCER	PLYMOUTH DODGE	CHRYSLER IMPERIAL
22-20-0	**SPARE WHEEL CARRIER - Cont'd**					
22-20-29	BRACKET - Cont'd					
	SD3, SC1, SC2, SC3, except Sub.	8	1	---- ---	2094 624	2094 624
	SD3, SC1, SC3, Sub.	8	1	---- ---	2093 980	2093 980
	SY1	8	1	---- ---	---- ---	1695 319
22-20-80	PLATE, Anchor Rod, SY1	8	1	---- ---	---- ---	1750 747
22-20-87	ROD, Spare Wheel Anchor, SD3, SC1, SC3, Sub., SY1		1	---- ---	*1963 237	*1963 237
	BOLT, except Sub. and Cv. Cp.		1	6023 593	2254 645	128 980
	Sub.		1	6022 801	2254 684	
	Cv. Cp.	8	1	---- ---	2252 176	
	Cv. Cp., w/7.00 Tire	8	1	---- ---	2252 177	
22-20-89	NUT, Anchor Rod Wing		1	6000 332	6000 332	6000 332

NOTES

MyMopar.com

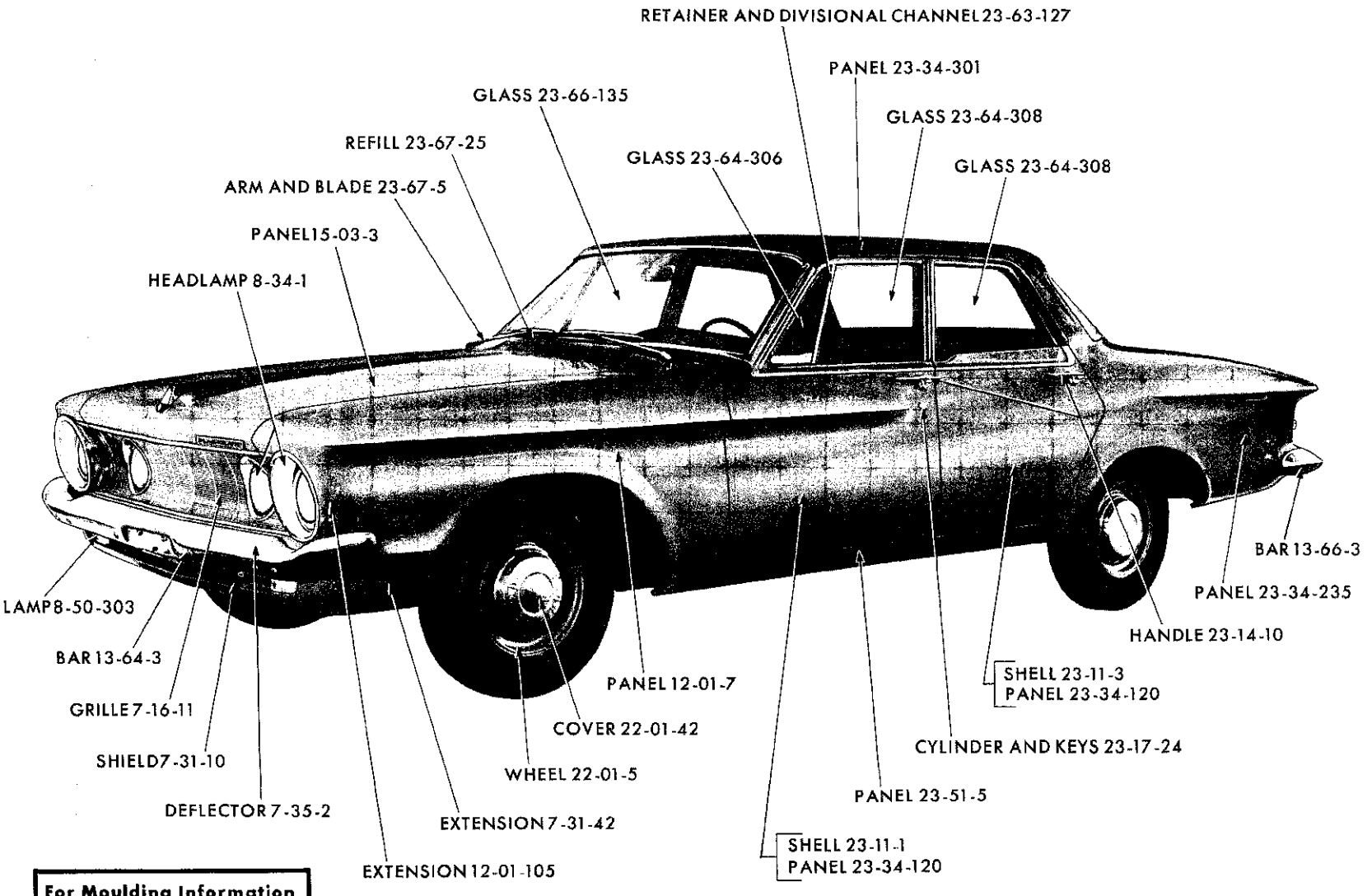

FRONT EXTERIOR - PLYMOUTH SP1-2 4 DOOR SEDAN

MyMopar.com

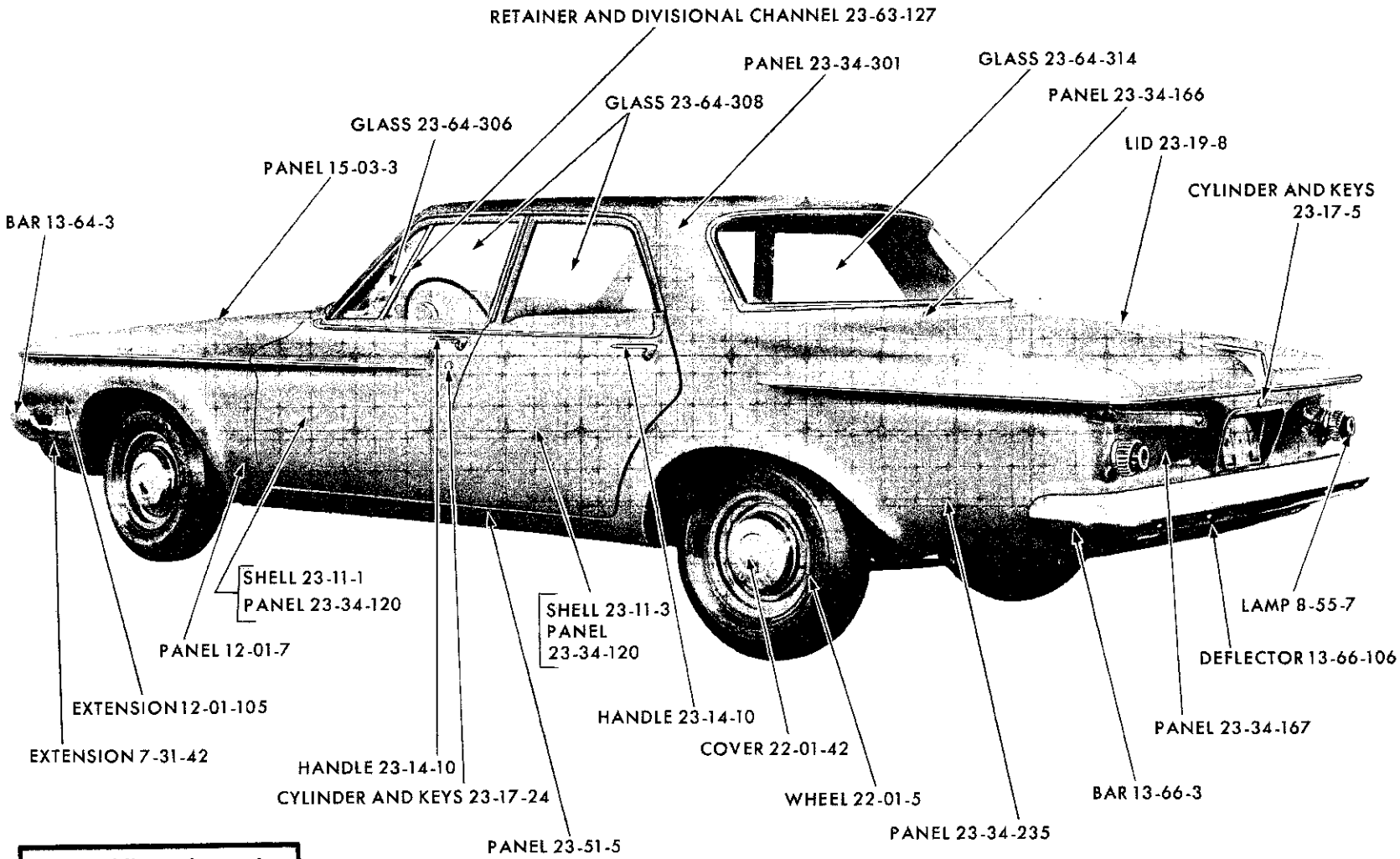

REAR EXTERIOR - PLYMOUTH SP1-2 4 DOOR SEDAN

MyMopar.com

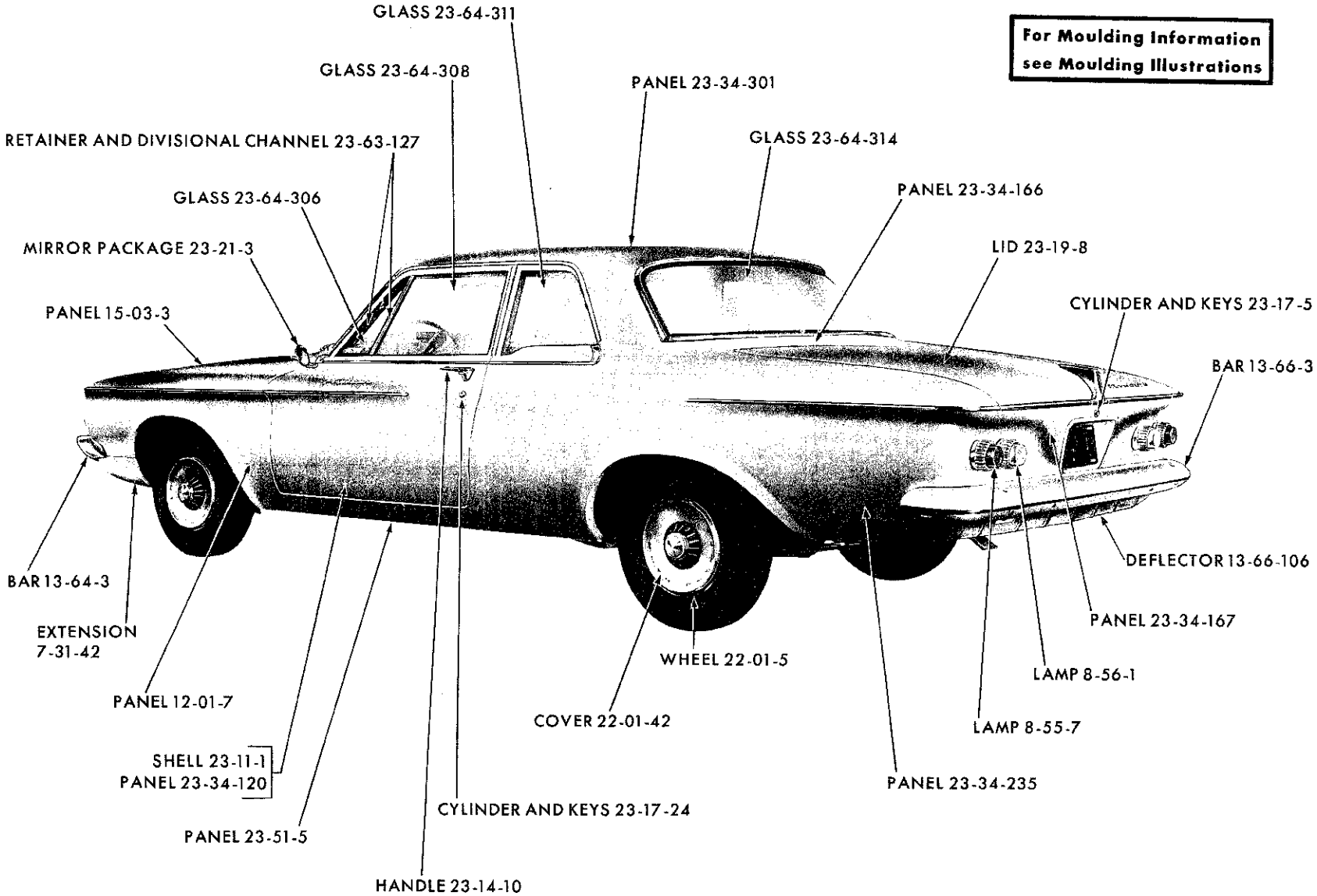

REAR EXTERIOR - PLYMOUTH SP1-2 CLUB SEDAN

MyMopar.com

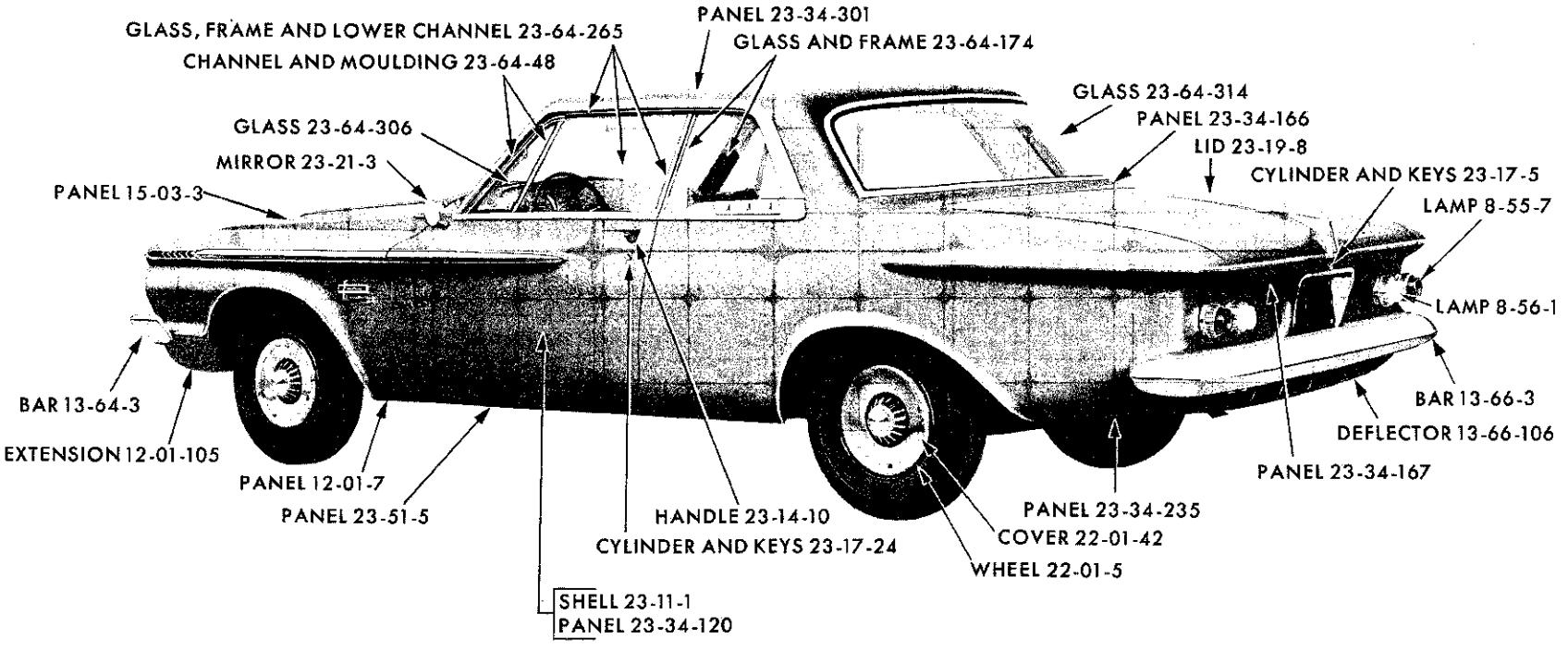

For Moulding Information see Moulding Illustrations

19x9175

REAR EXTERIOR - PLYMOUTH SP1-2 SPECIAL CLUB COUPE

MyMopar.com

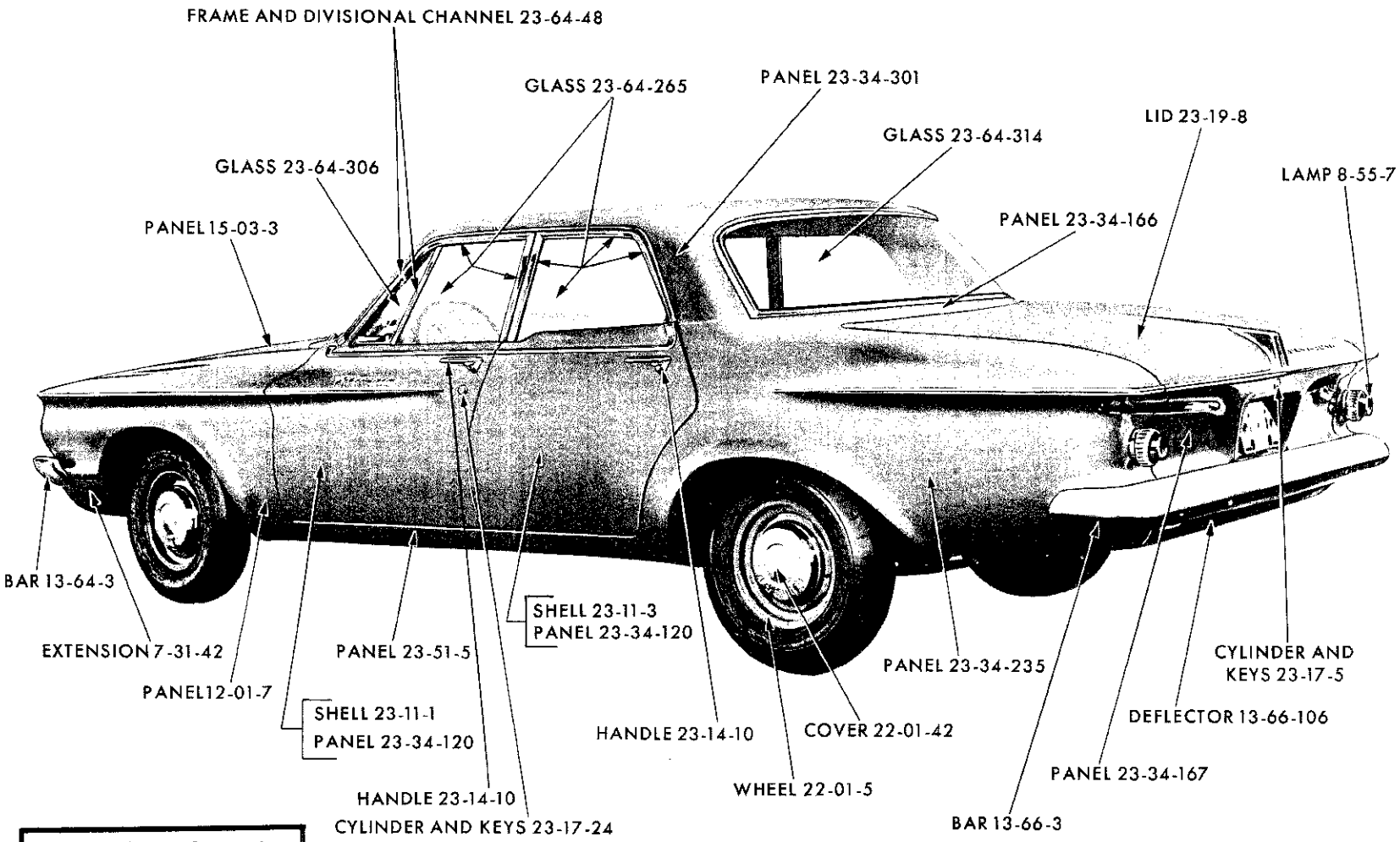

For Moulding Information see Moulding Illustrations

REAR EXTERIOR - PLYMOUTH SP1-2 SPECIAL 4 DOOR SEDAN

MyMopar.com

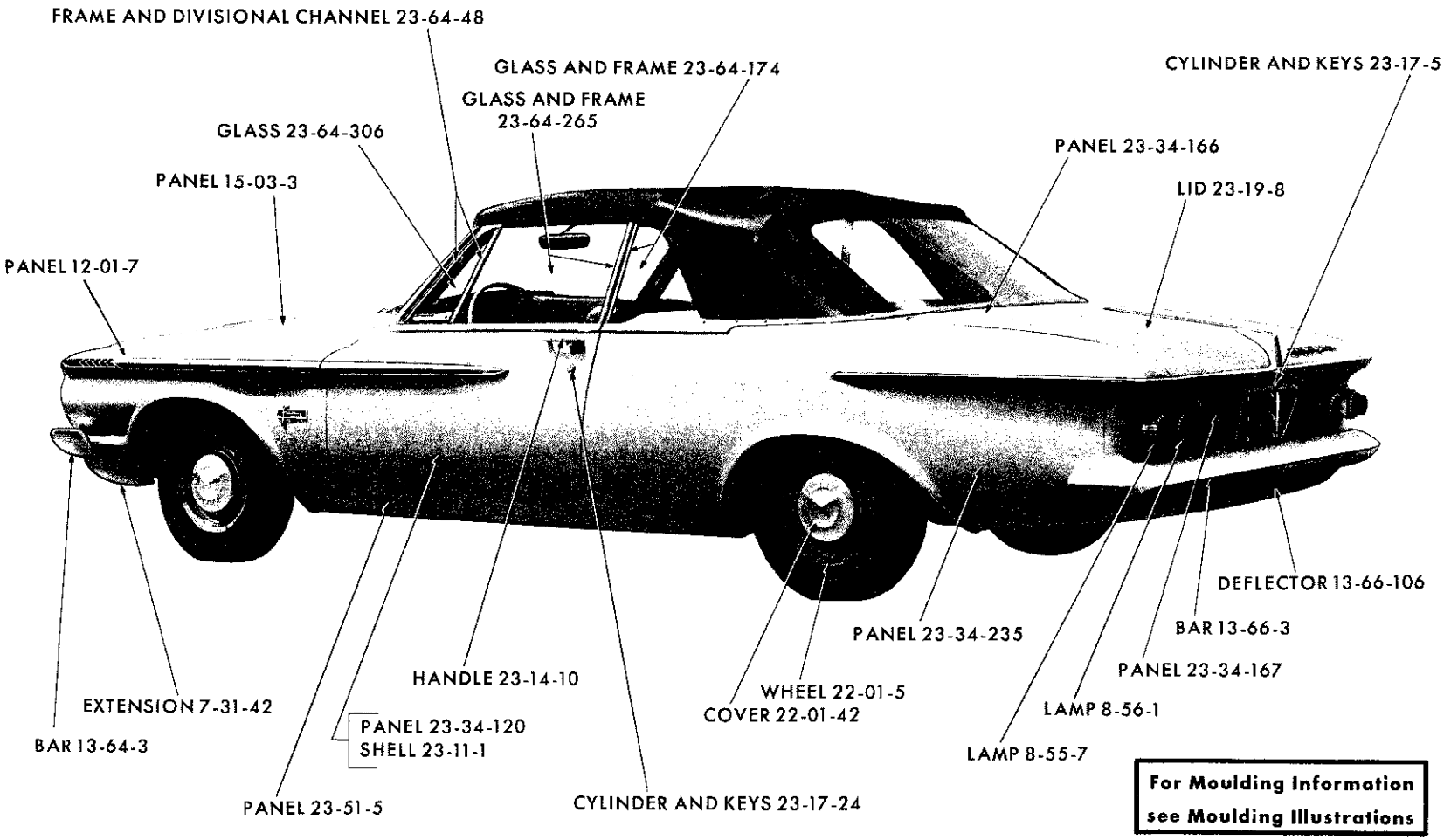

REAR EXTERIOR - PLYMOUTH SP2 CONVERTIBLE COUPE

MyMopar.com

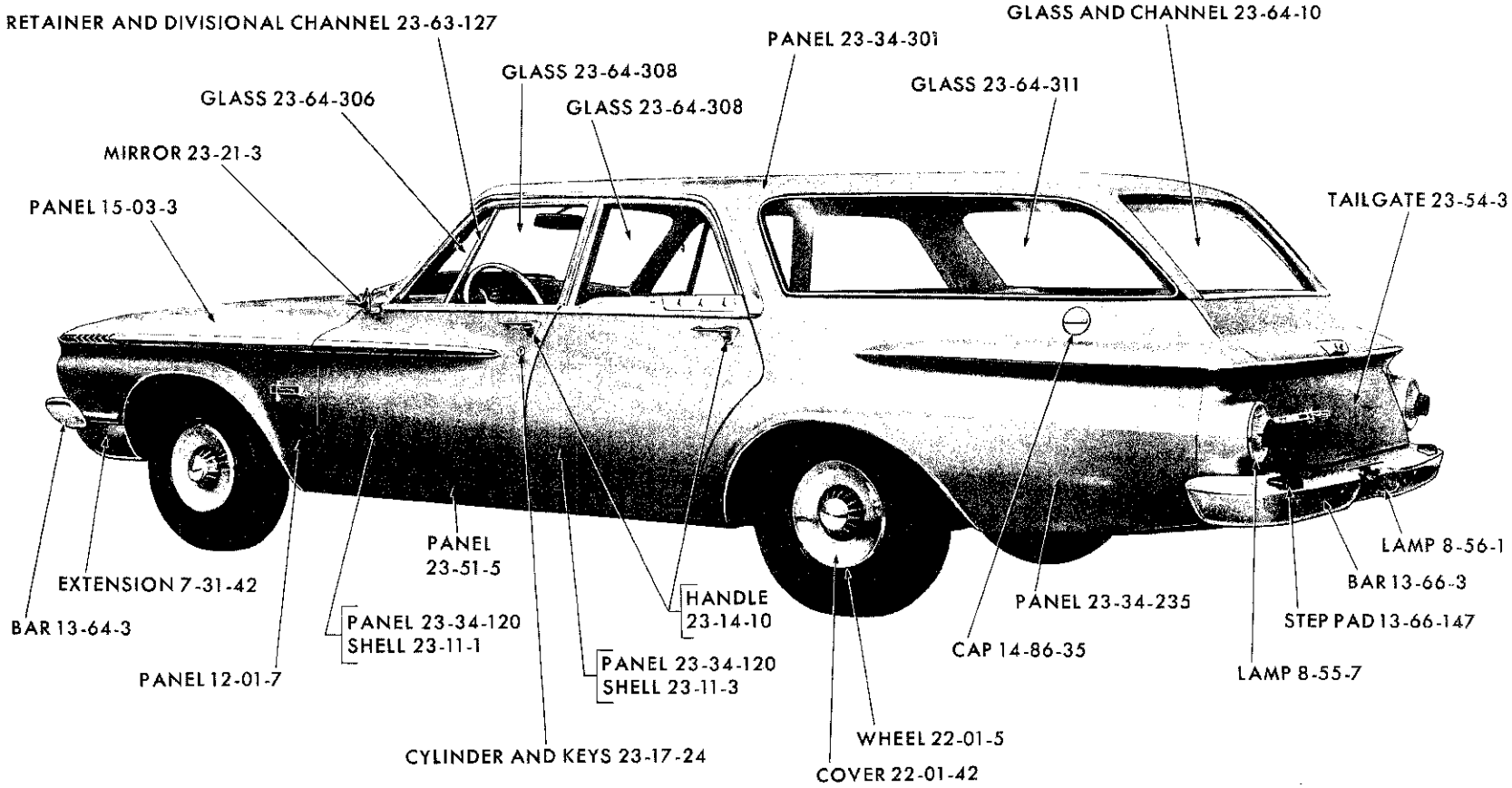

For Moulding Information see Moulding Illustrations

19x9202

REAR EXTERIOR - PLYMOUTH SP1-2 SUBURBAN

MyMopar.com

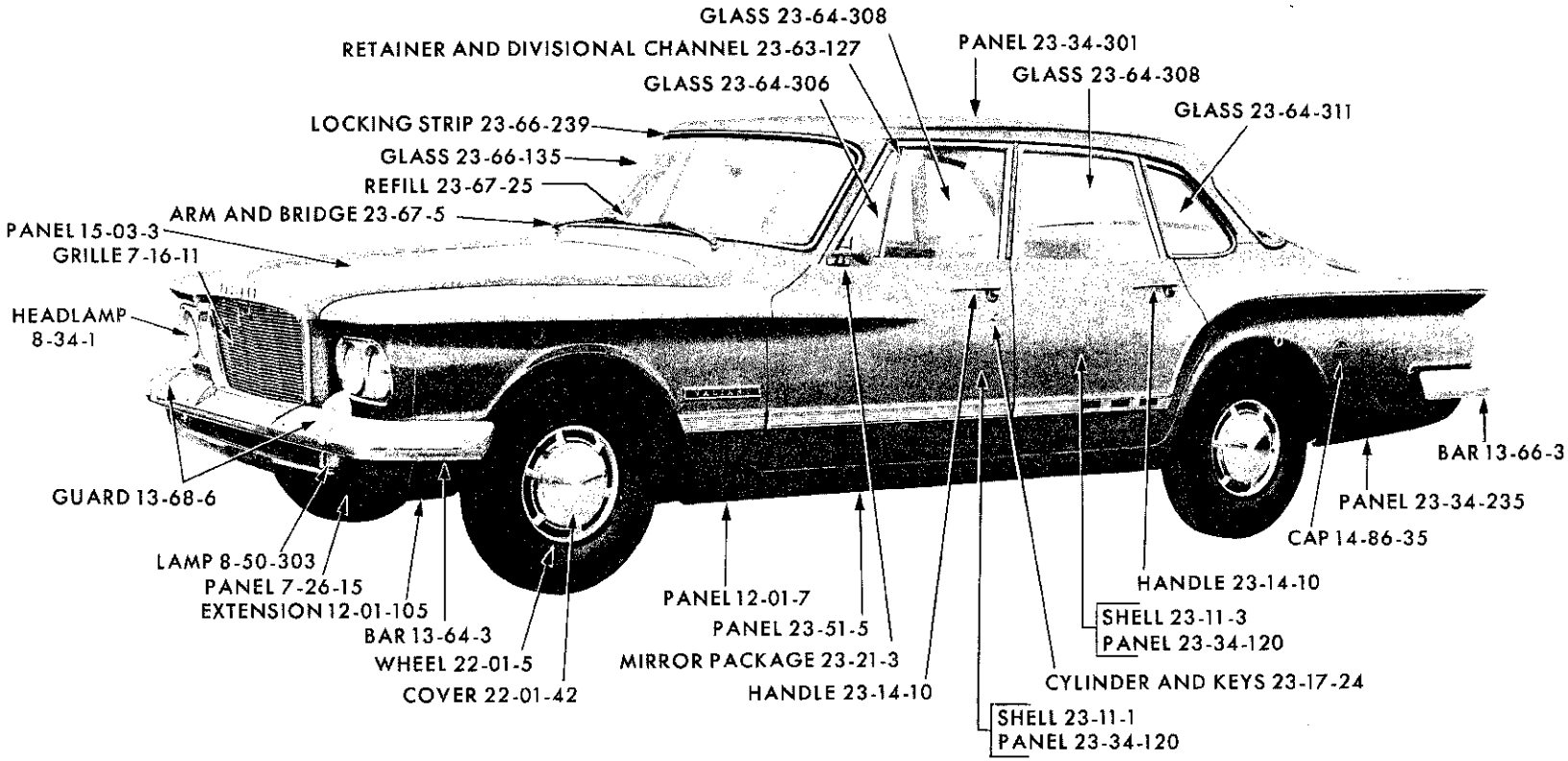

For Moulding Information see Moulding Illustrations

19x9176

FRONT EXTERIOR - VALIANT SV1 4 DOOR SEDAN

MyMopar.com

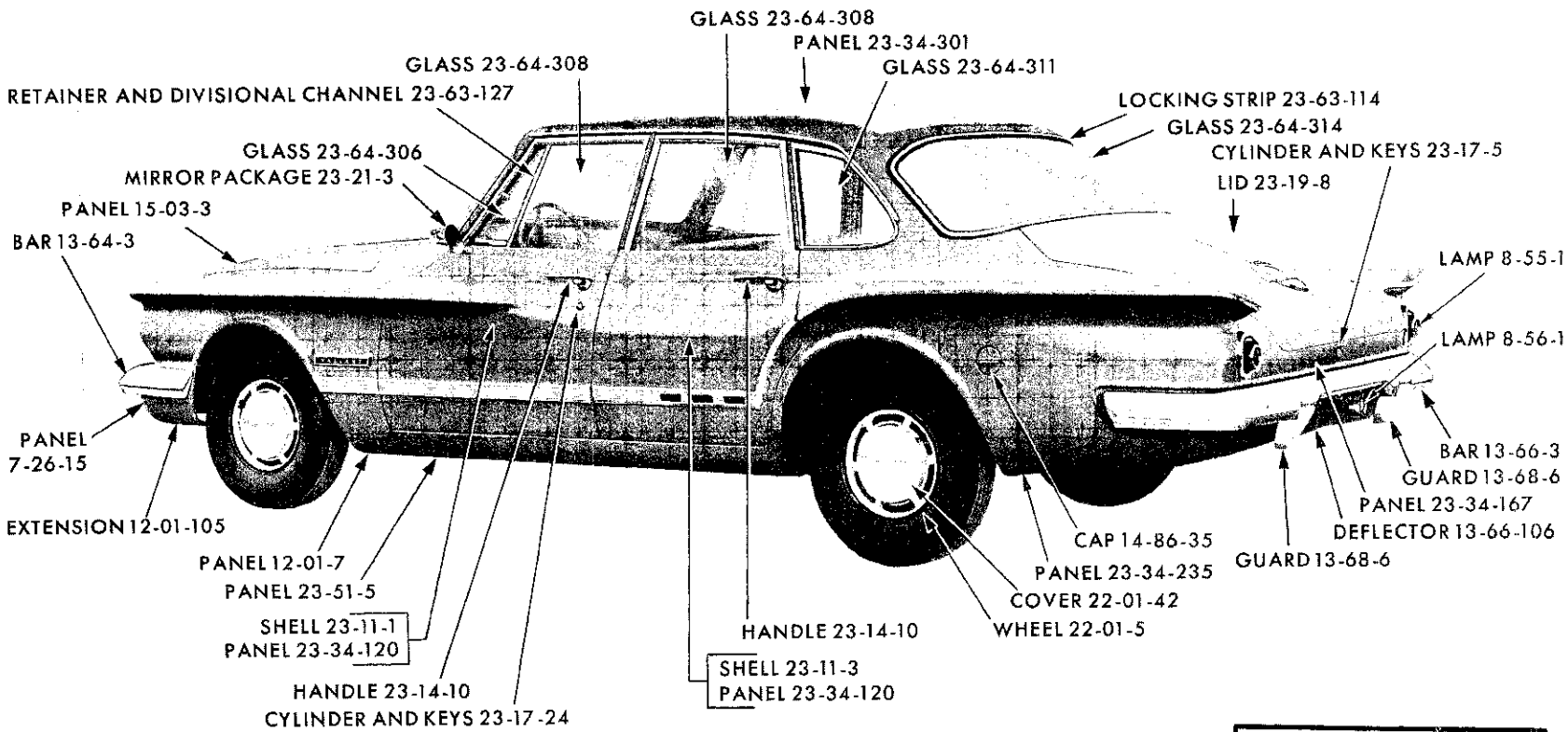

For Moulding Information see Moulding Illustrations

19x9177

REAR EXTERIOR - VALIANT SV1 4 DOOR SEDAN

MyMopar.com

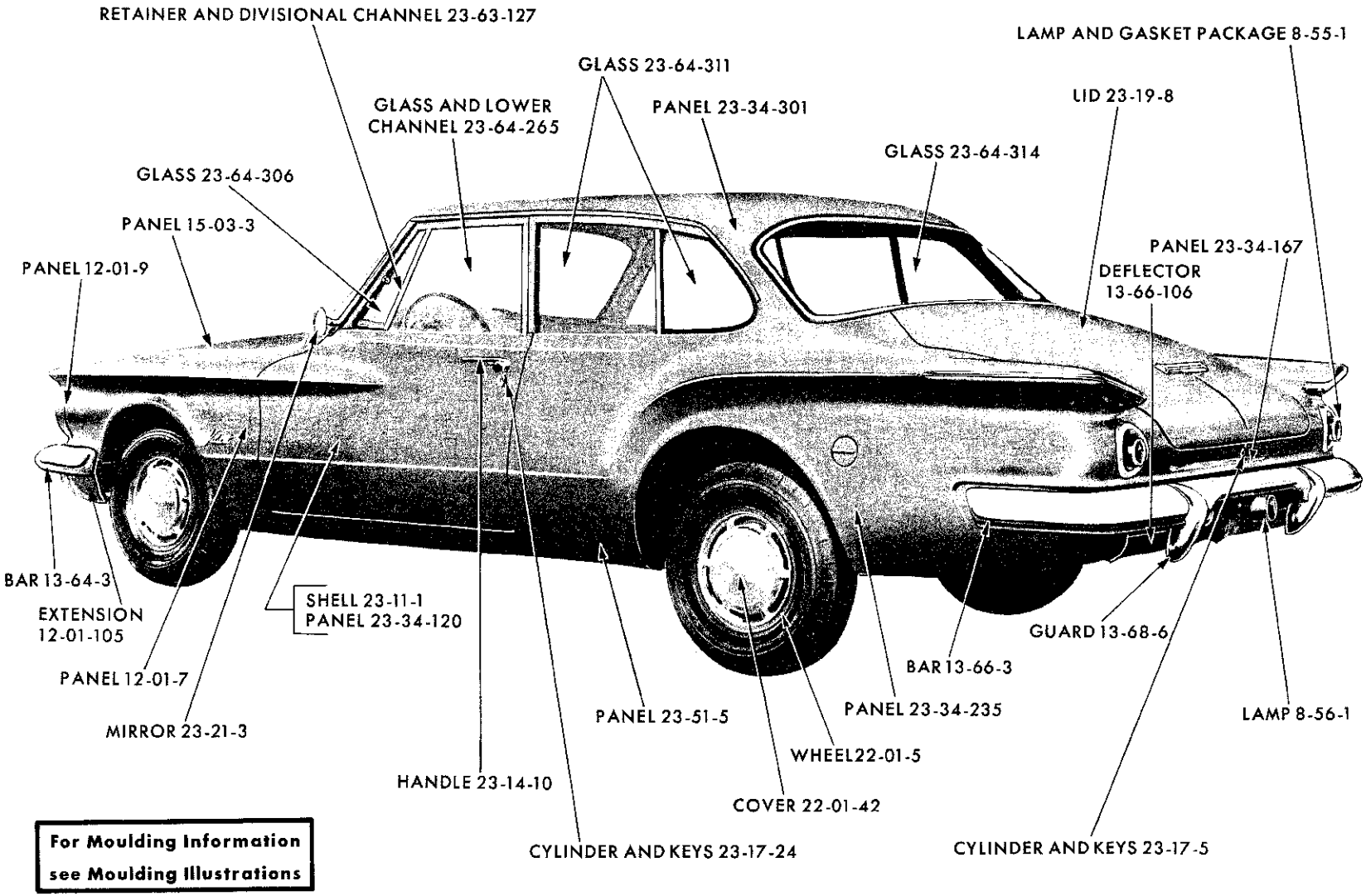

REAR EXTERIOR - VALIANT SV1 CLUB SEDAN

MyMopar.com

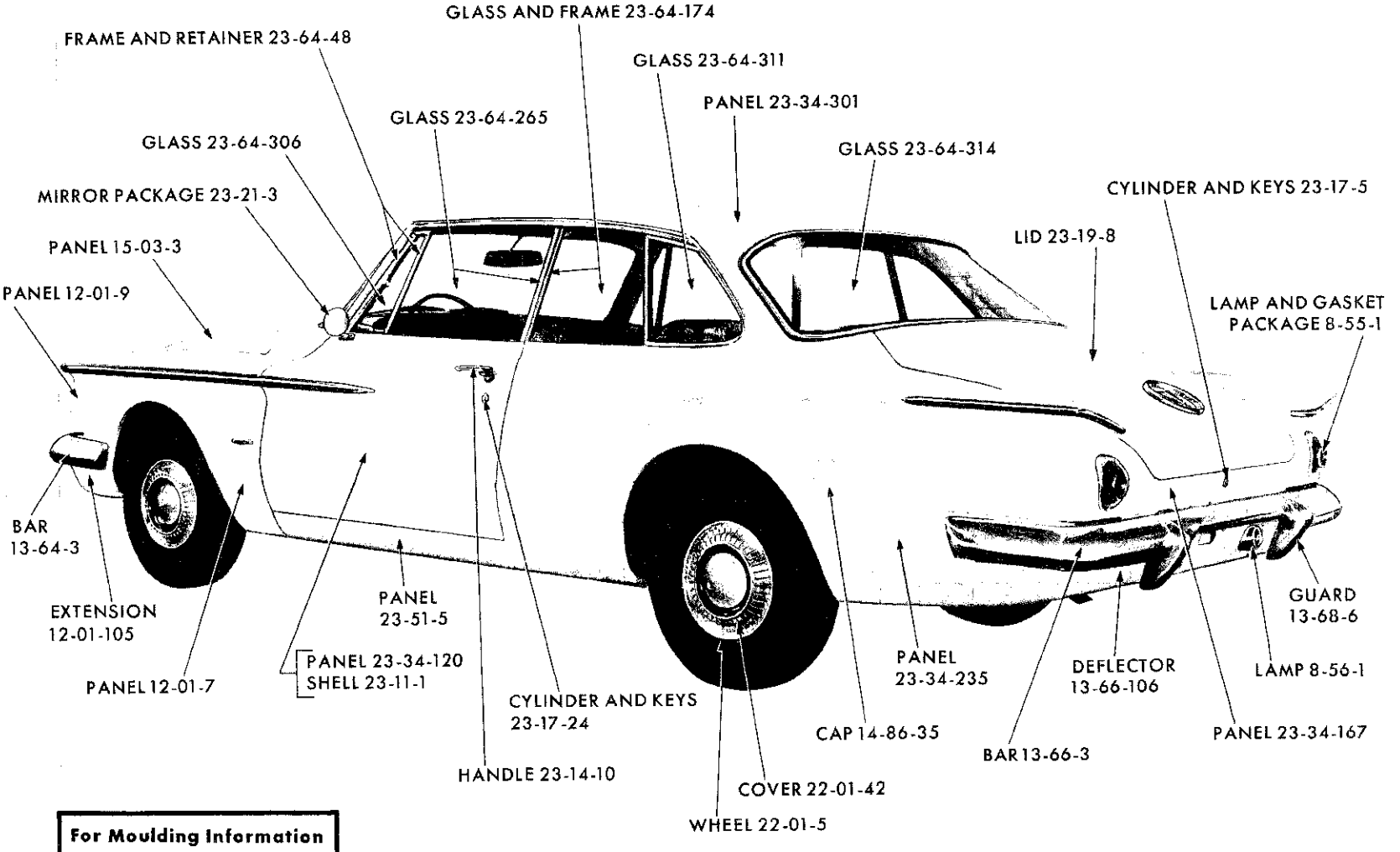

For Moulding Information see Moulding Illustrations

REAR EXTERIOR - VALIANT SV1 SPECIAL CLUB COUPE

MyMopar.com

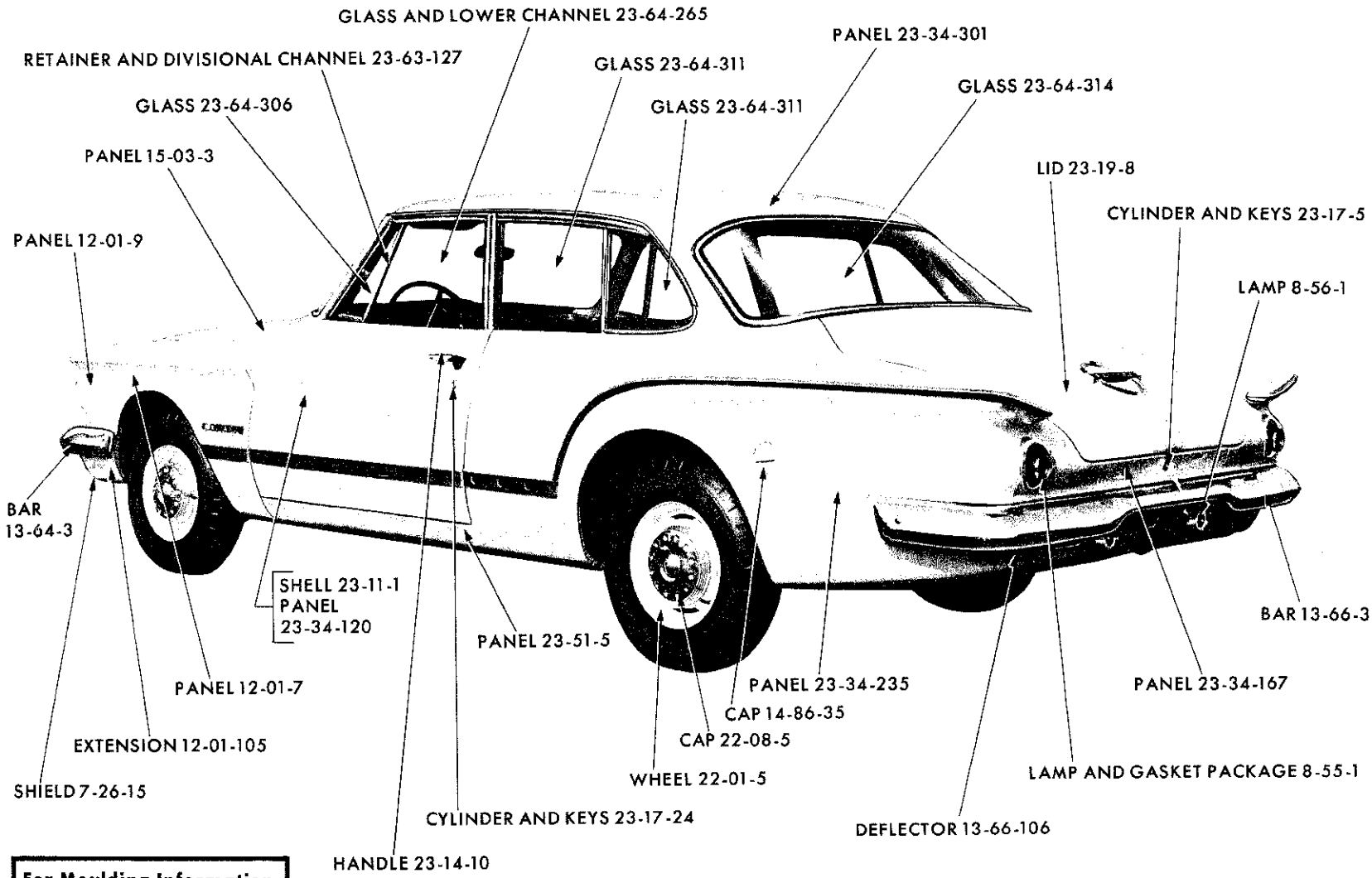

REAR EXTERIOR - VALIANT SV1(H) SPECIAL CLUB COUPE

MyMopar.com

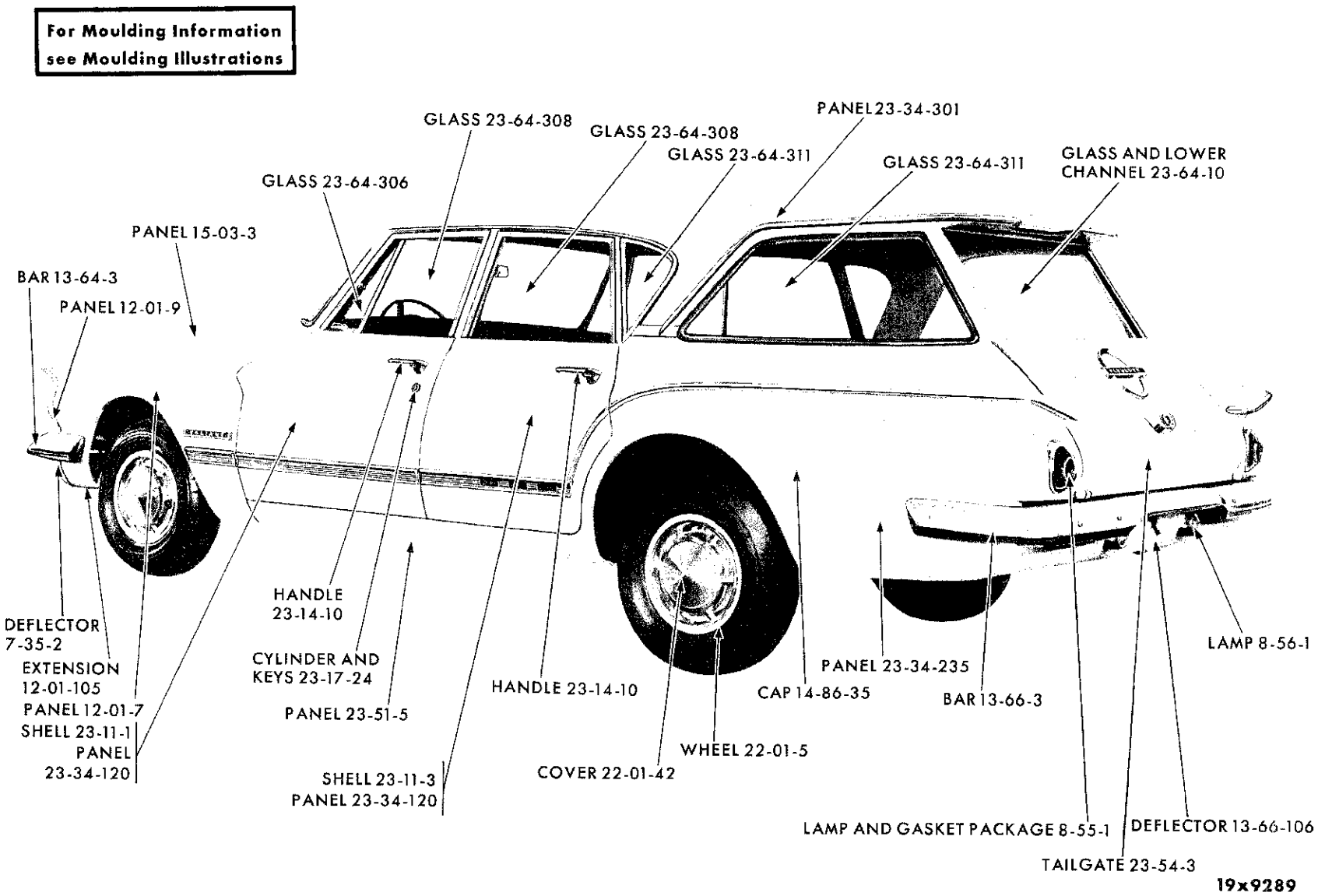

REAR EXTERIOR - VALIANT SV1 SUBURBAN

MyMopar.com

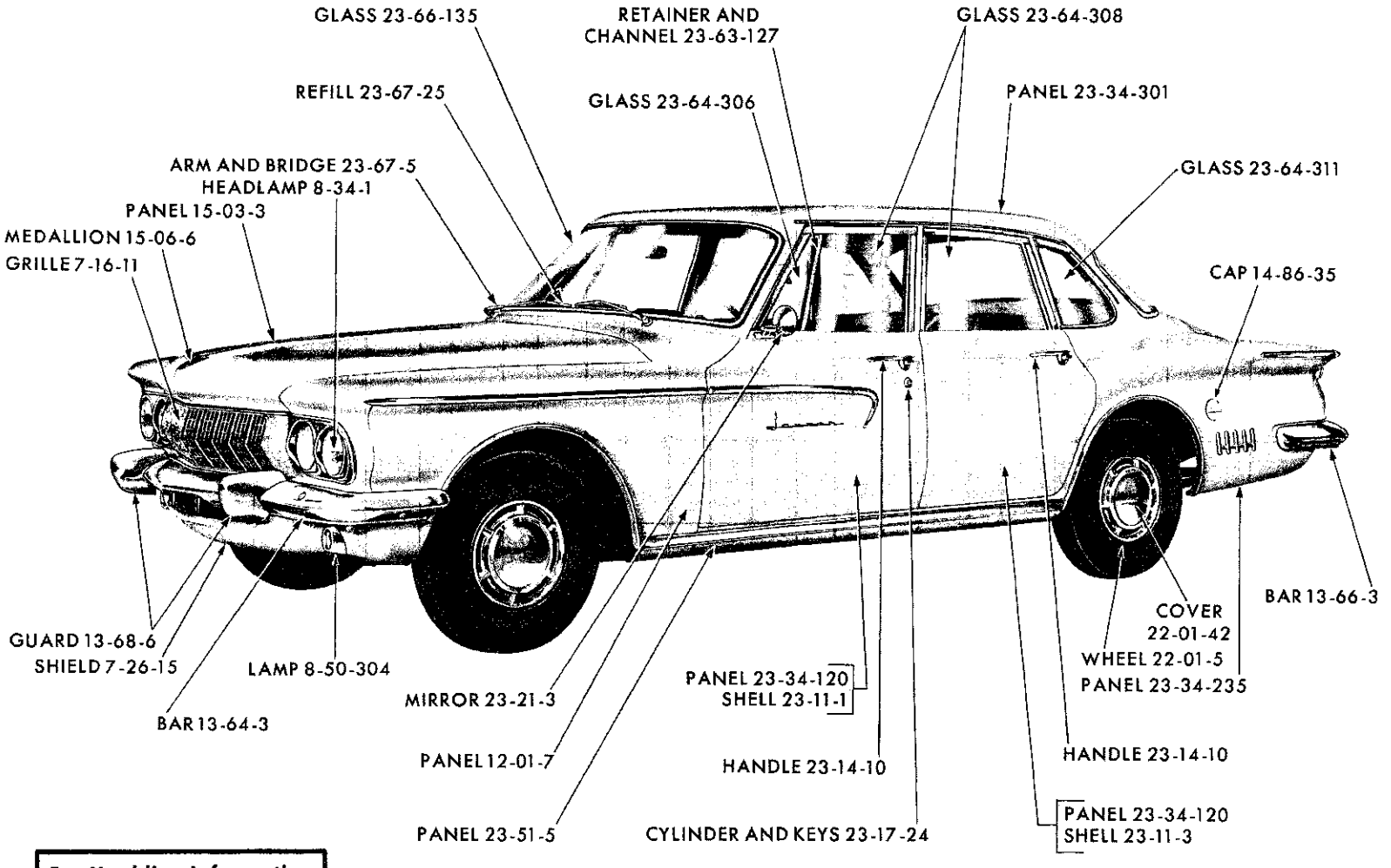

FRONT EXTERIOR - LANCER SL1 4 DOOR SEDAN

MyMopar.com

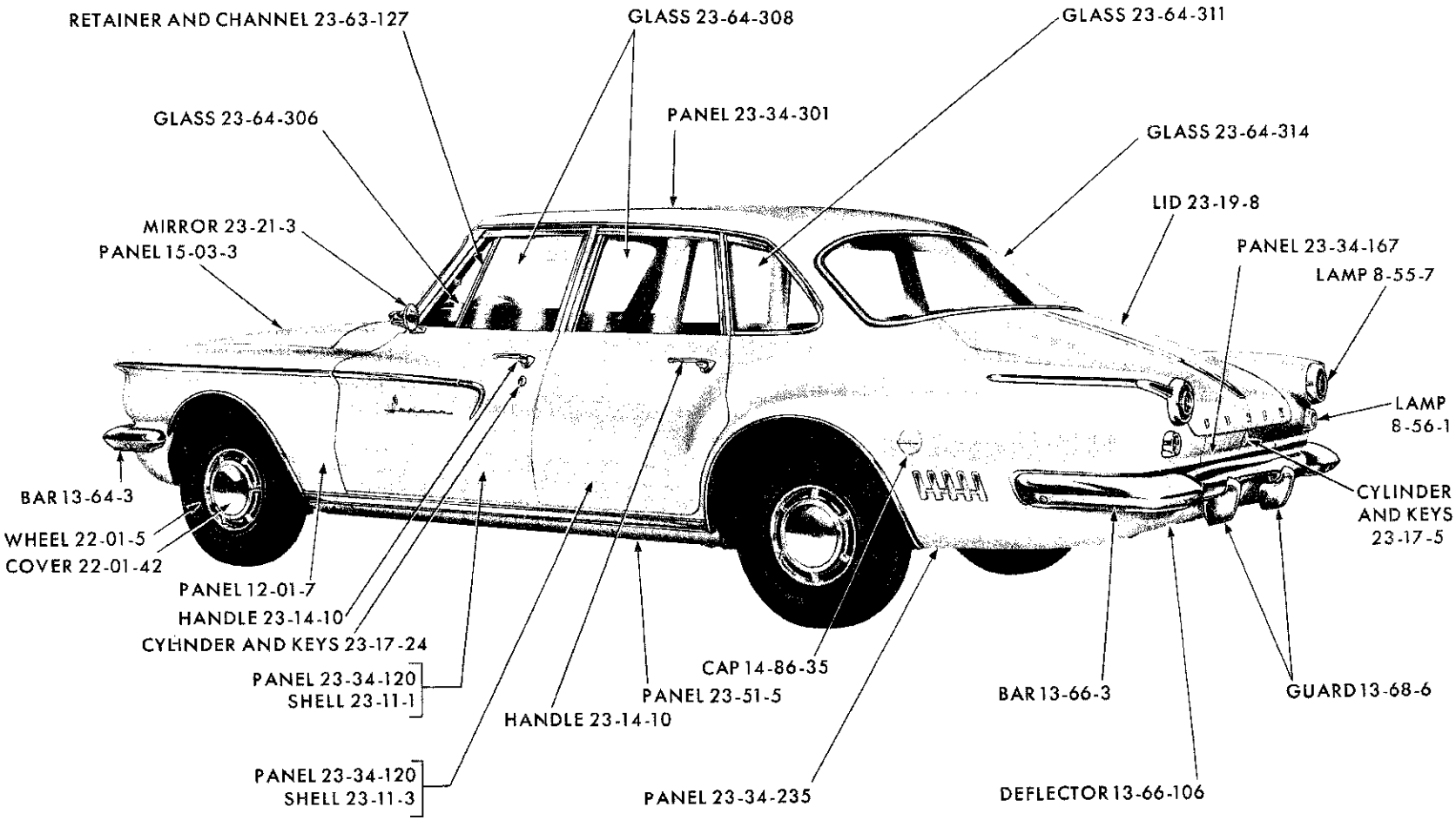

For Moulding Information see Moulding Illustrations

19x9170

REAR EXTERIOR - LANCER SL1 4 DOOR SEDAN

MyMopar.com

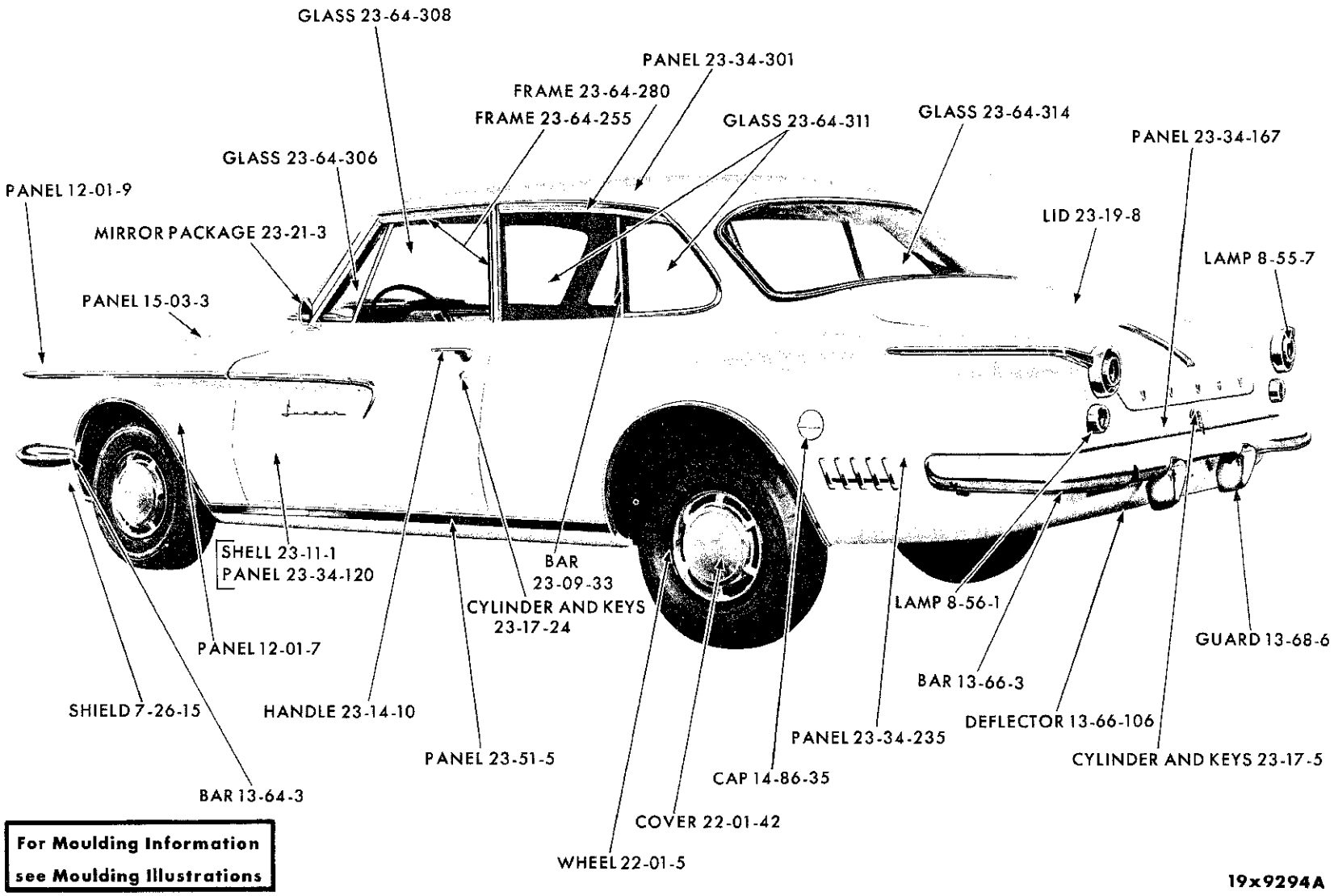

For Moulding Information see Moulding Illustrations

REAR EXTERIOR - LANCER SL1 CLUB SEDAN

MyMopar.com

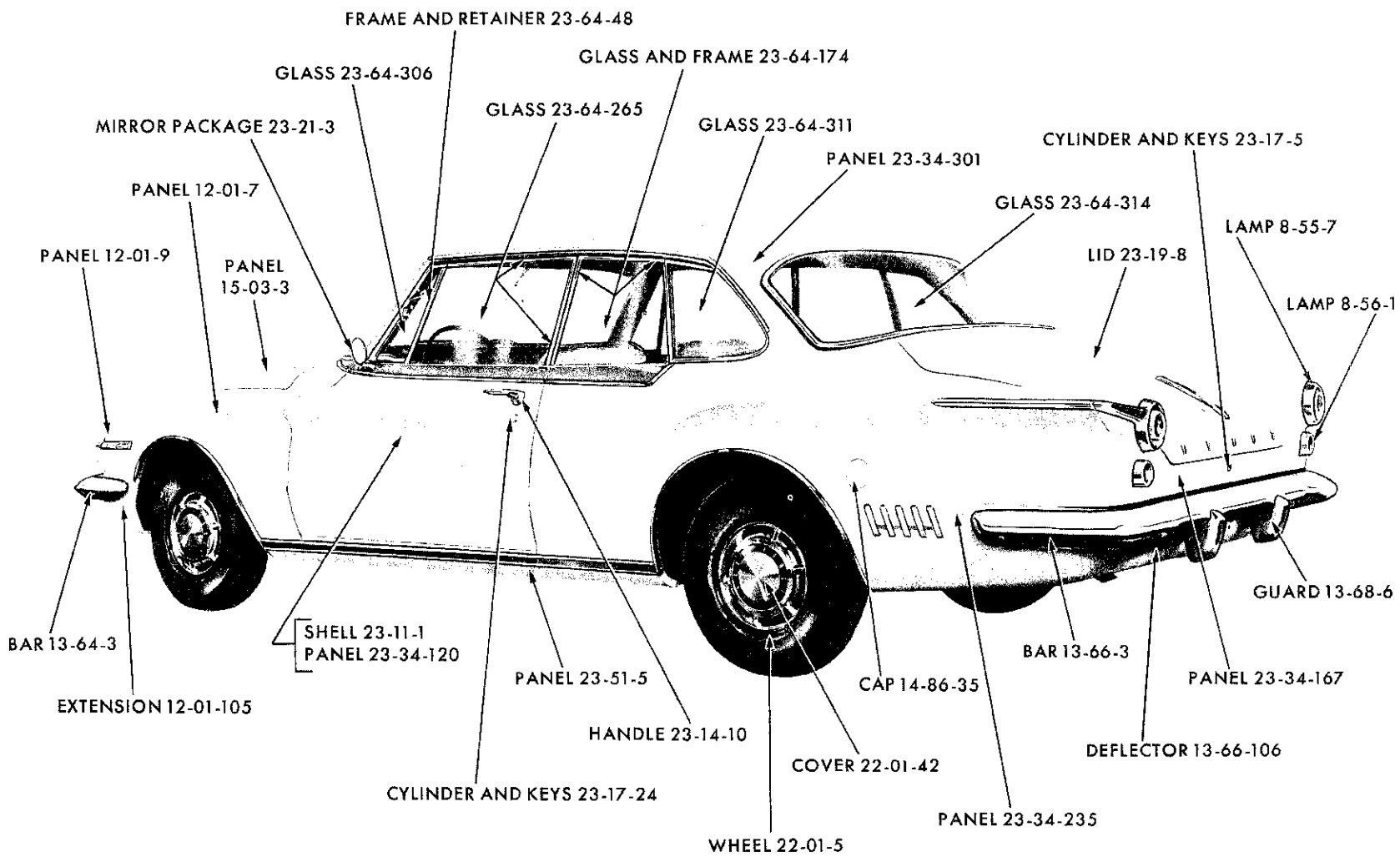

For Moulding Information see Moulding Illustrations

19x9305

REAR EXTERIOR - LANCER SL1 SPECIAL CLUB COUPE

MyMopar.com

CODE	PART NAME AND DESCRIPTION	CYL.	PER CAR	VALIANT LANCER	PLYMOUTH DODGE	CHRYSLER IMPERIAL

NOTES

★ Indicates use as required.
⊟ Indicates parts not listed in any previous parts book.
November 30, 1961.

Printed in U.S.A.
Prices and specifications subject to change without notice.

MyMopar.com

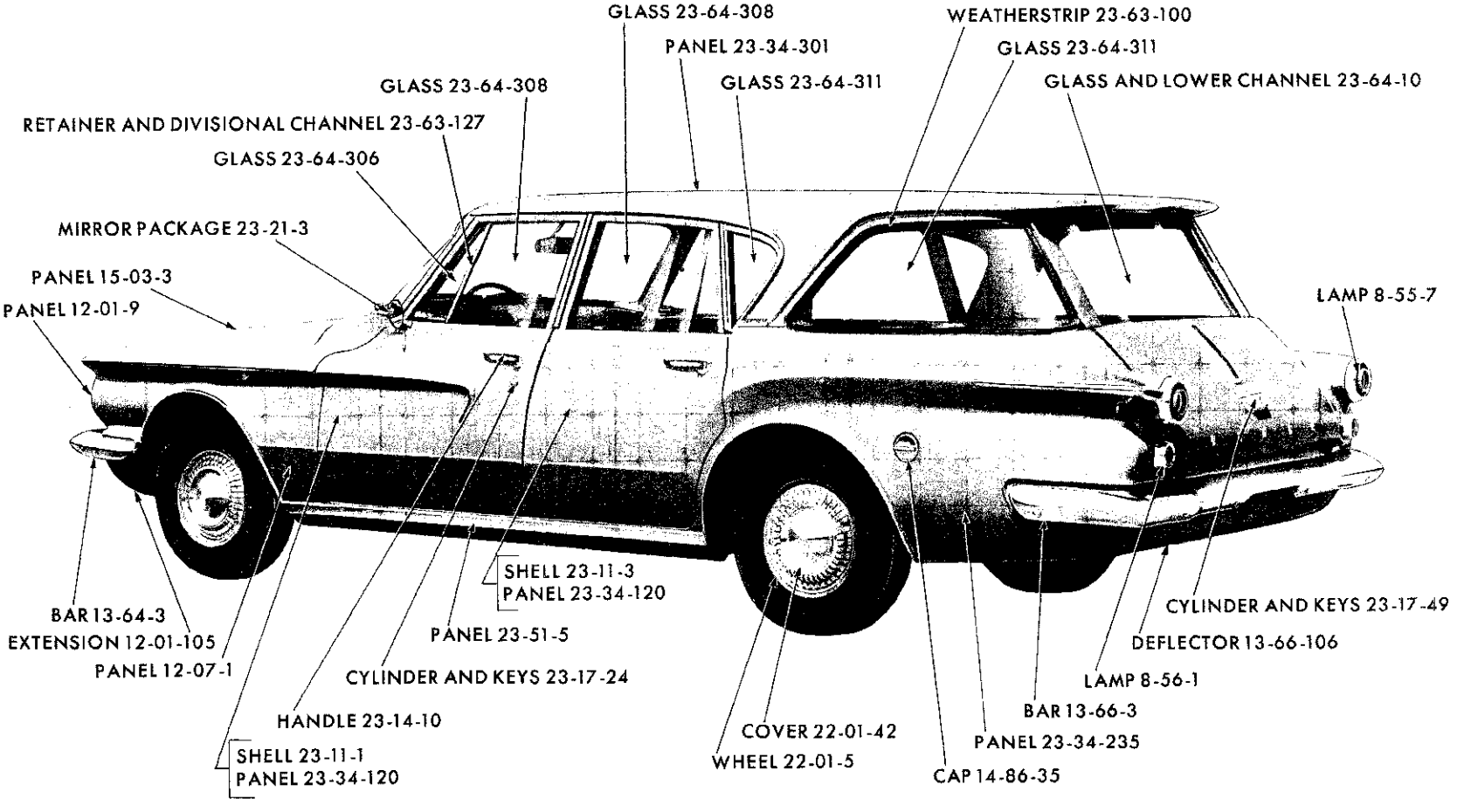

For Moulding Information see Moulding Illustrations

19x9183

REAR EXTERIOR - LANCER SL1 SUBURBAN

MyMopar.com

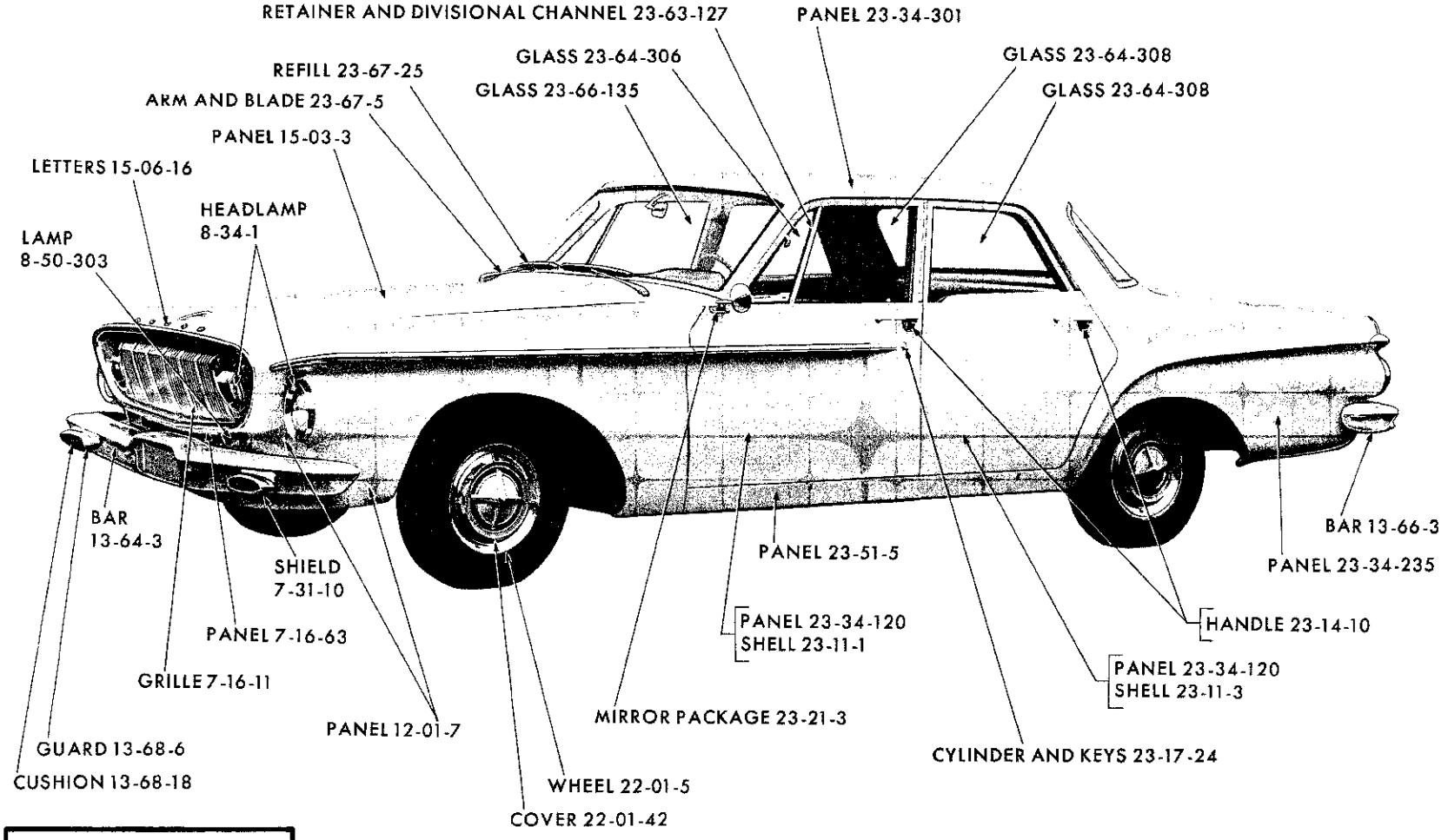

FRONT EXTERIOR - DODGE SD1-2 4 DOOR SEDAN

MyMopar.com

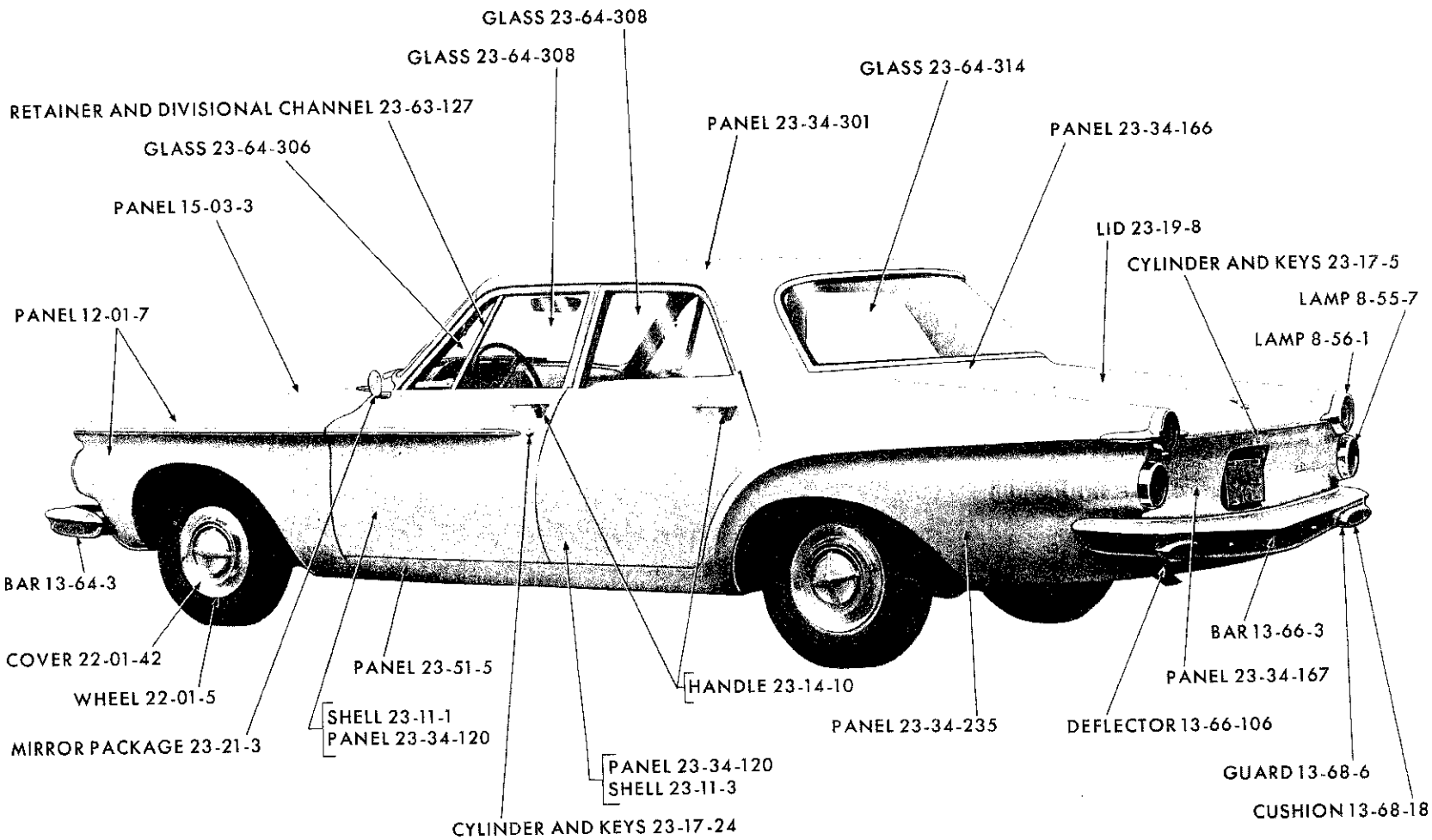

For Moulding Information see Moulding Illustrations

19x9200

REAR EXTERIOR - DODGE SD1-2 4 DOOR SEDAN

MyMopar.com

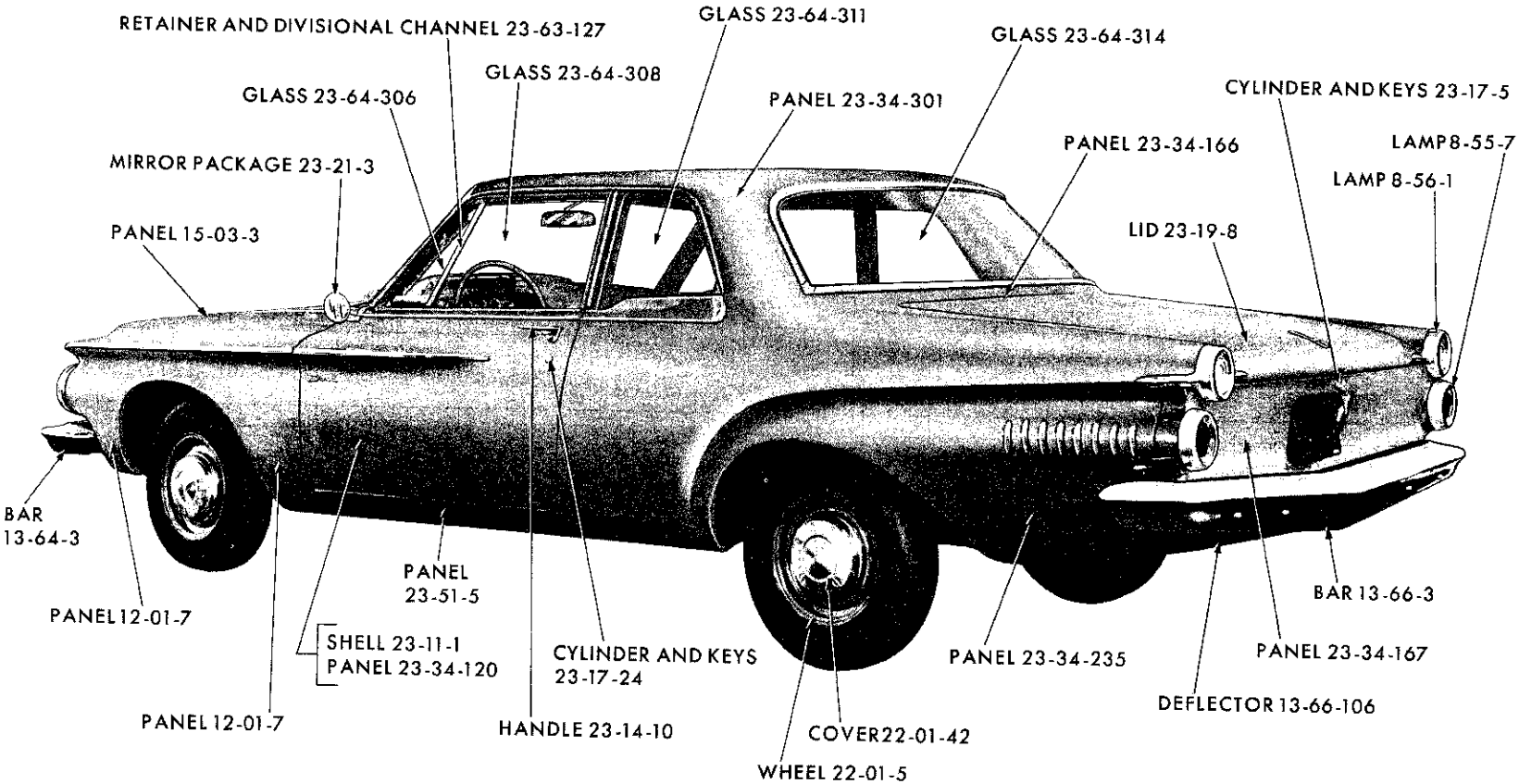

For Moulding Information see Moulding Illustrations

19x9278

REAR EXTERIOR - DART SD1-2 CLUB SEDAN

MyMopar.com

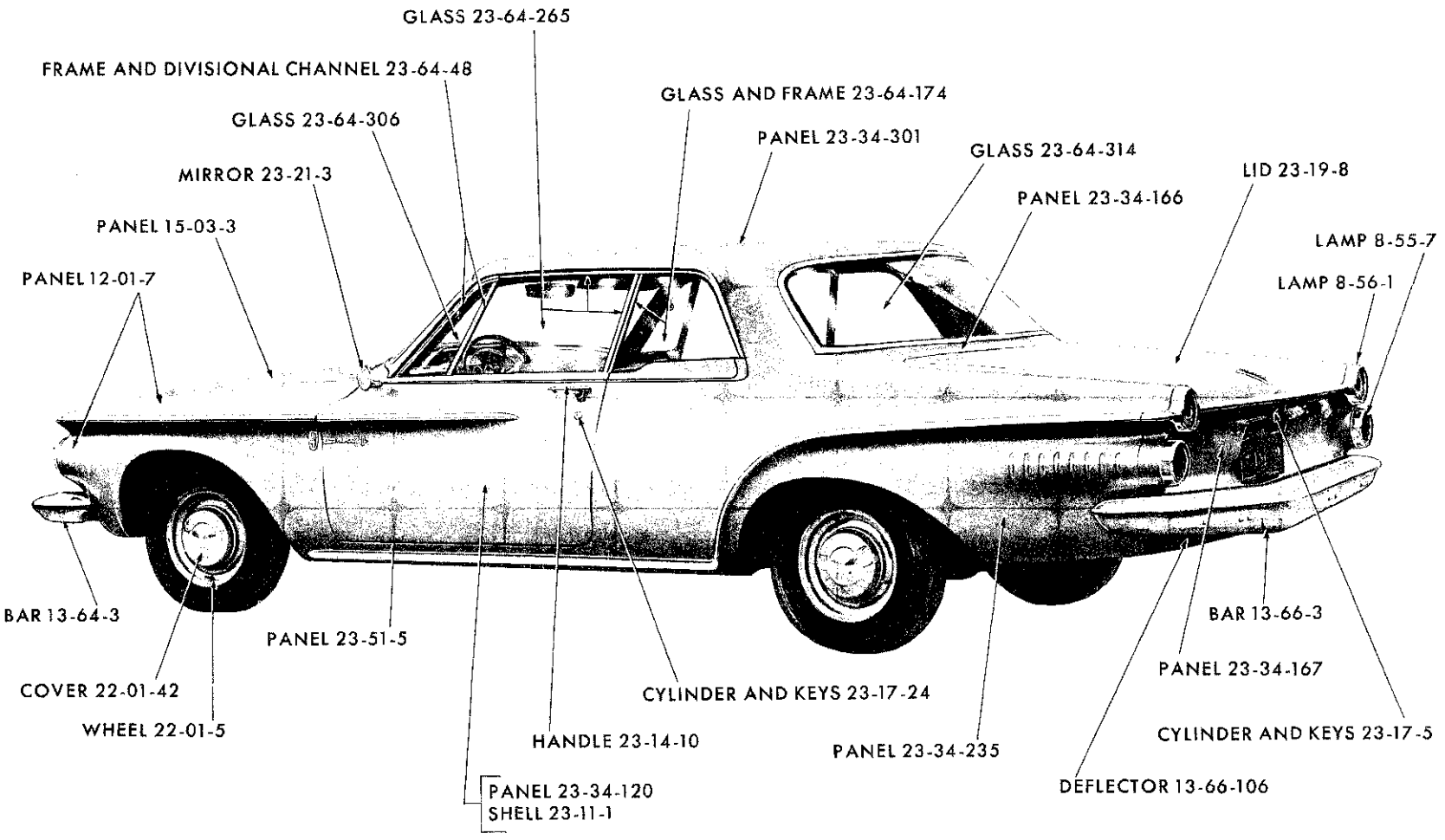

For Moulding Information see Moulding Illustrations

19x9195

REAR EXTERIOR - DODGE SD1-2 SPECIAL CLUB COUPE

MyMopar.com

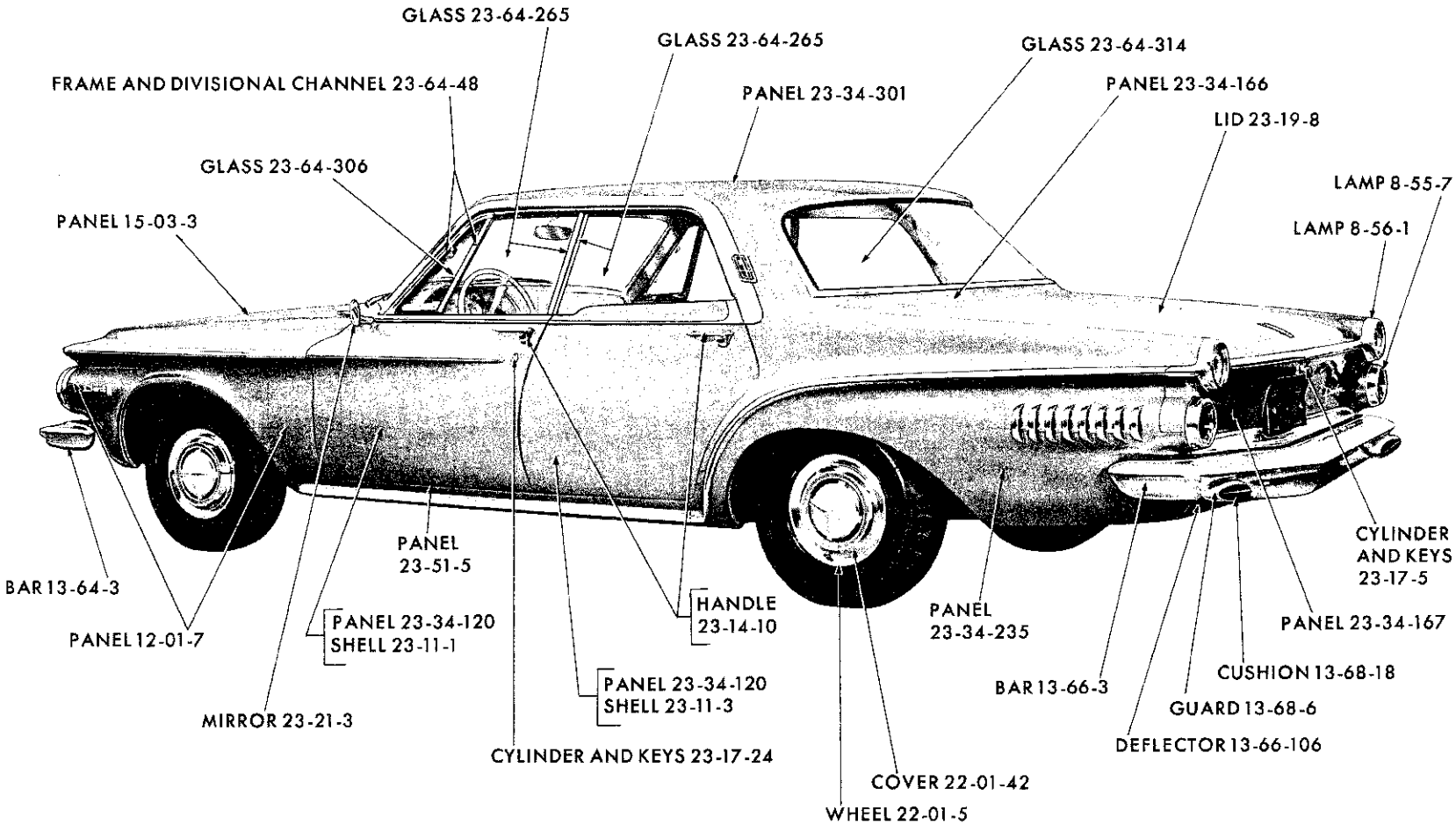

For Moulding Information see Moulding Illustrations

19x9207

REAR EXTERIOR - DODGE SD1-2 SPECIAL 4 DOOR SEDAN

MyMopar.com

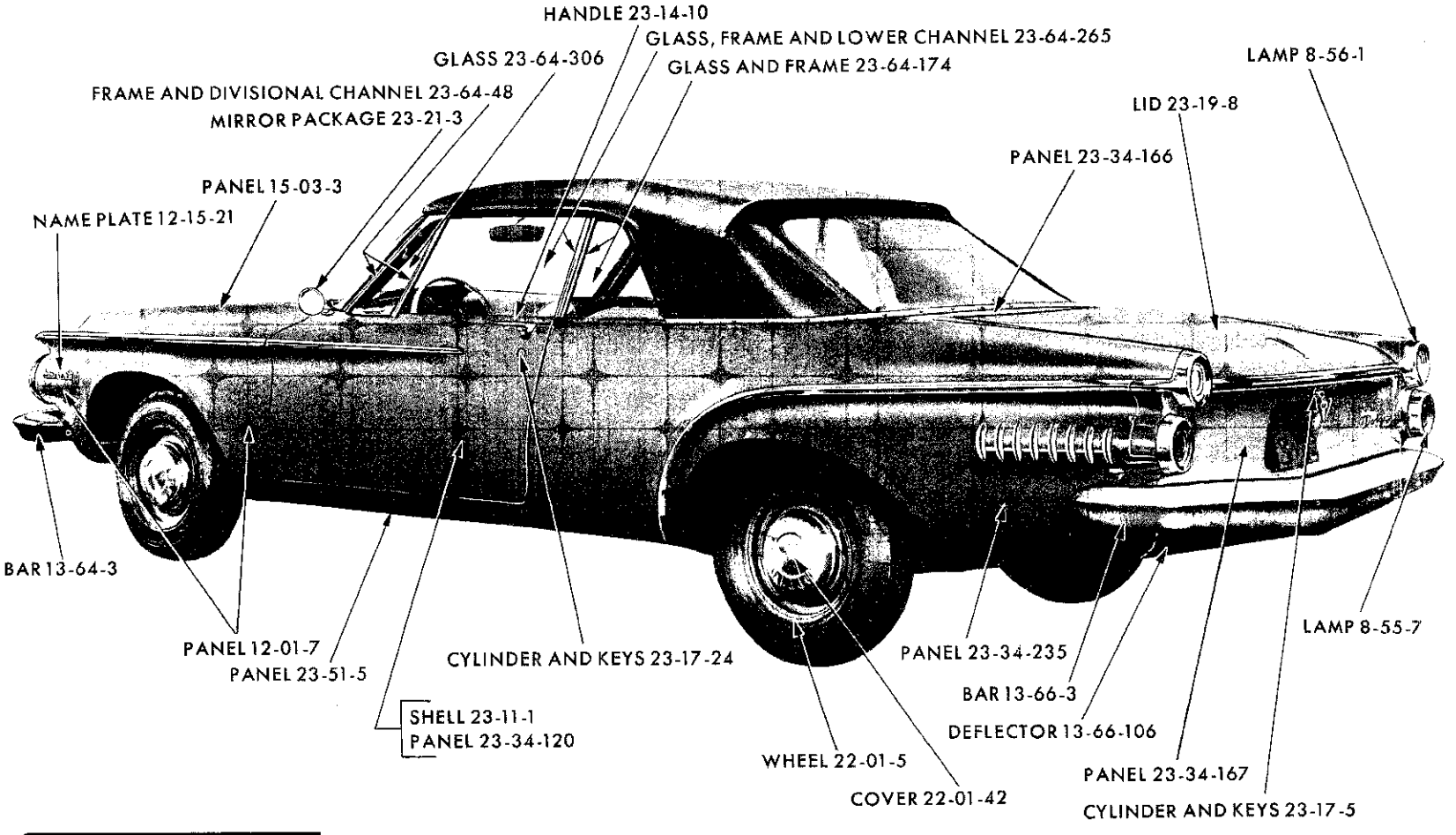

For Moulding Information see Moulding Illustrations

19x9283A

REAR EXTERIOR - DODGE SD2 CONVERTIBLE COUPE

MyMopar.com

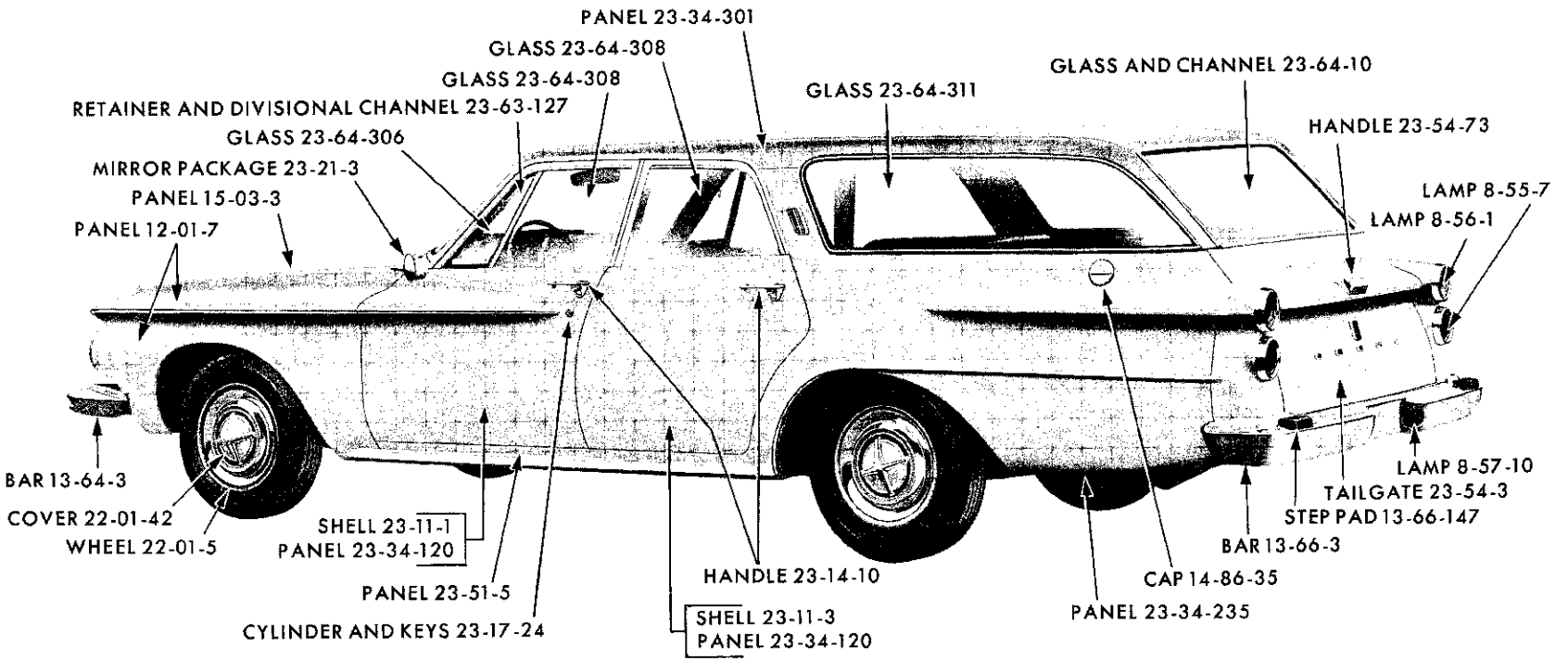

For Moulding Information see Moulding Illustrations

19x9197

REAR EXTERIOR - DODGE SD1-2 SUBURBAN

MyMopar.com

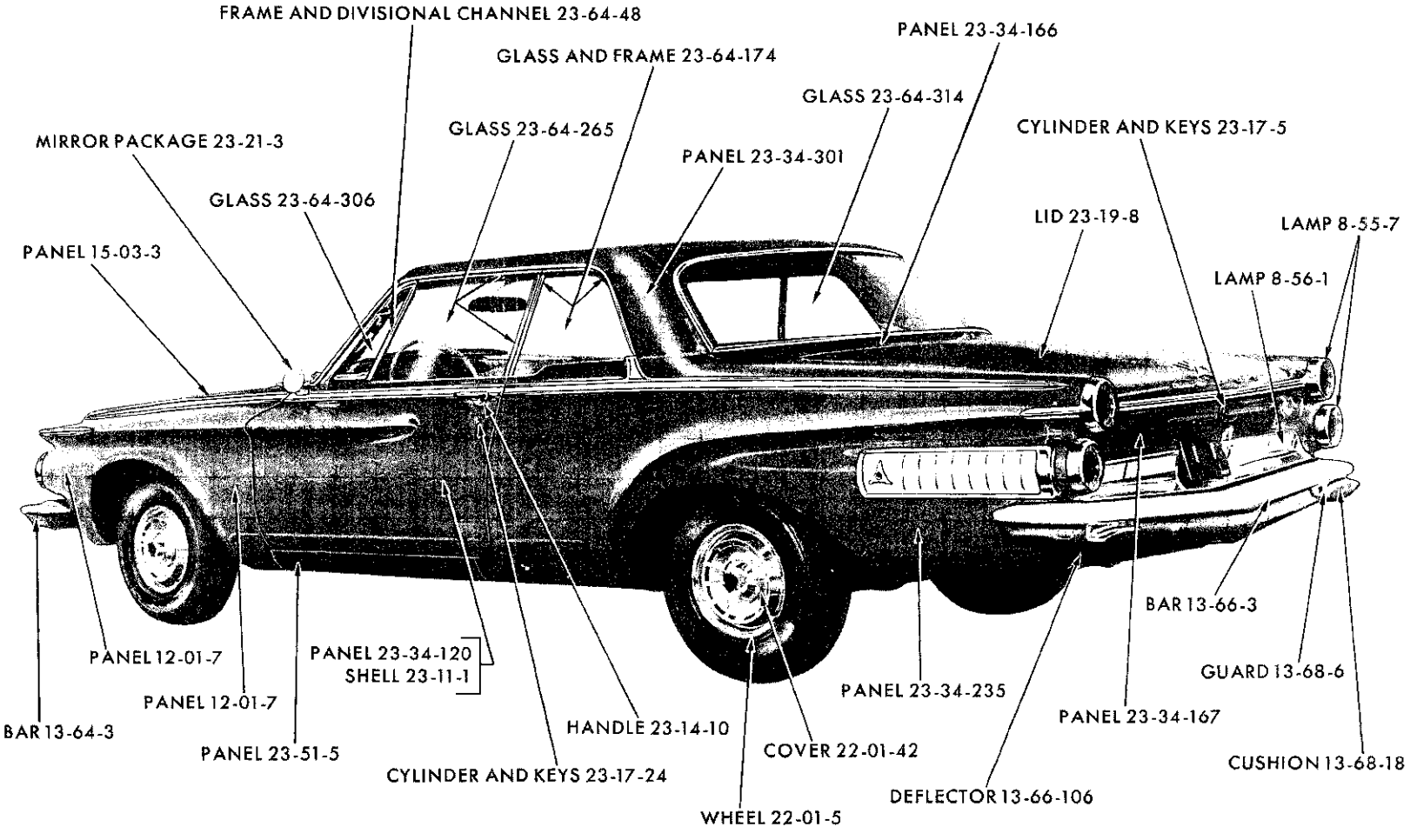

For Moulding Information see Moulding Illustrations

19x9303

REAR EXTERIOR - DODGE SD2-P SPECIAL CLUB COUPE

MyMopar.com

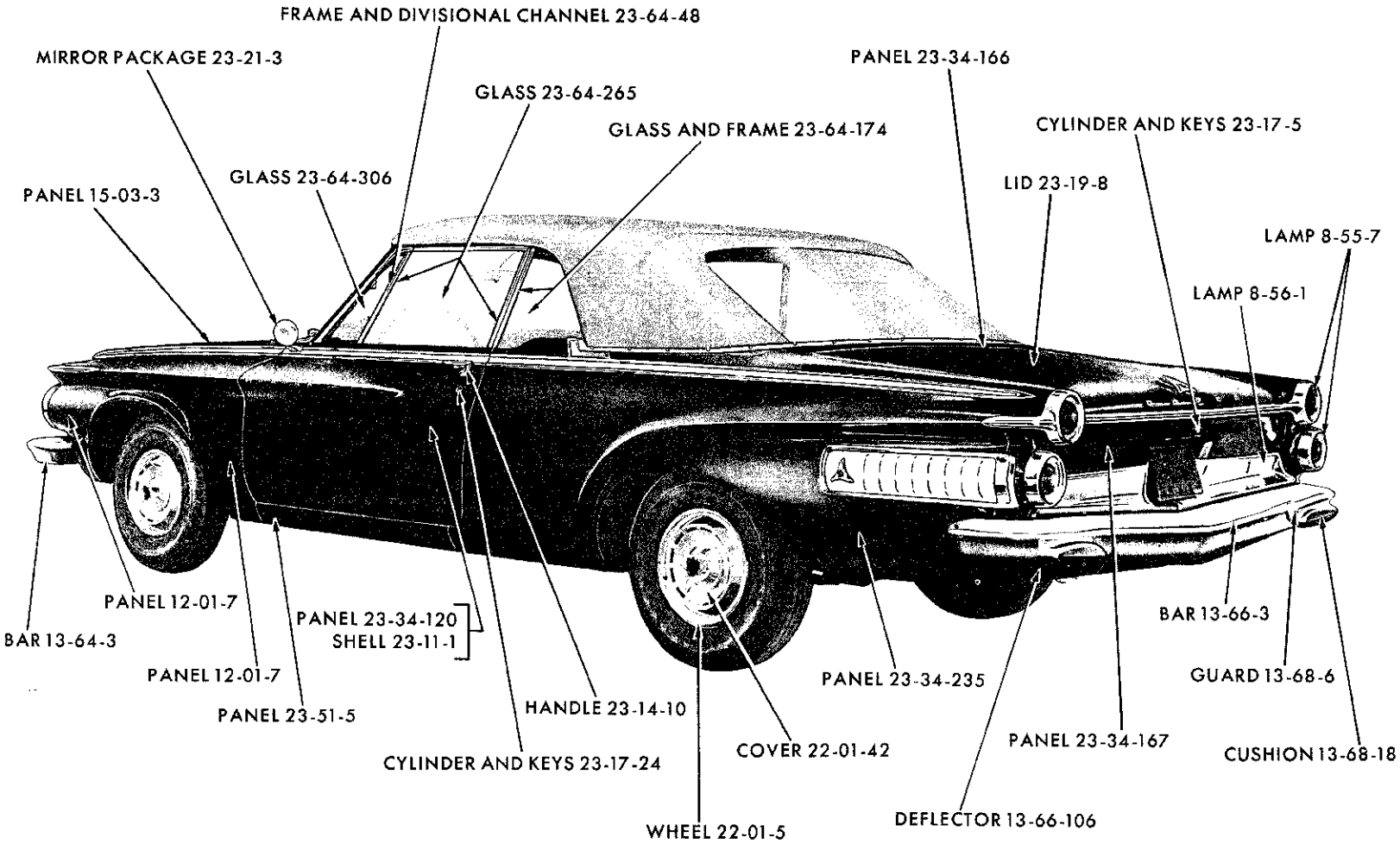

For Moulding Information see Moulding Illustrations

19x9304

REAR EXTERIOR - DODGE SD2-P CONVERTIBLE COUPE

MyMopar.com

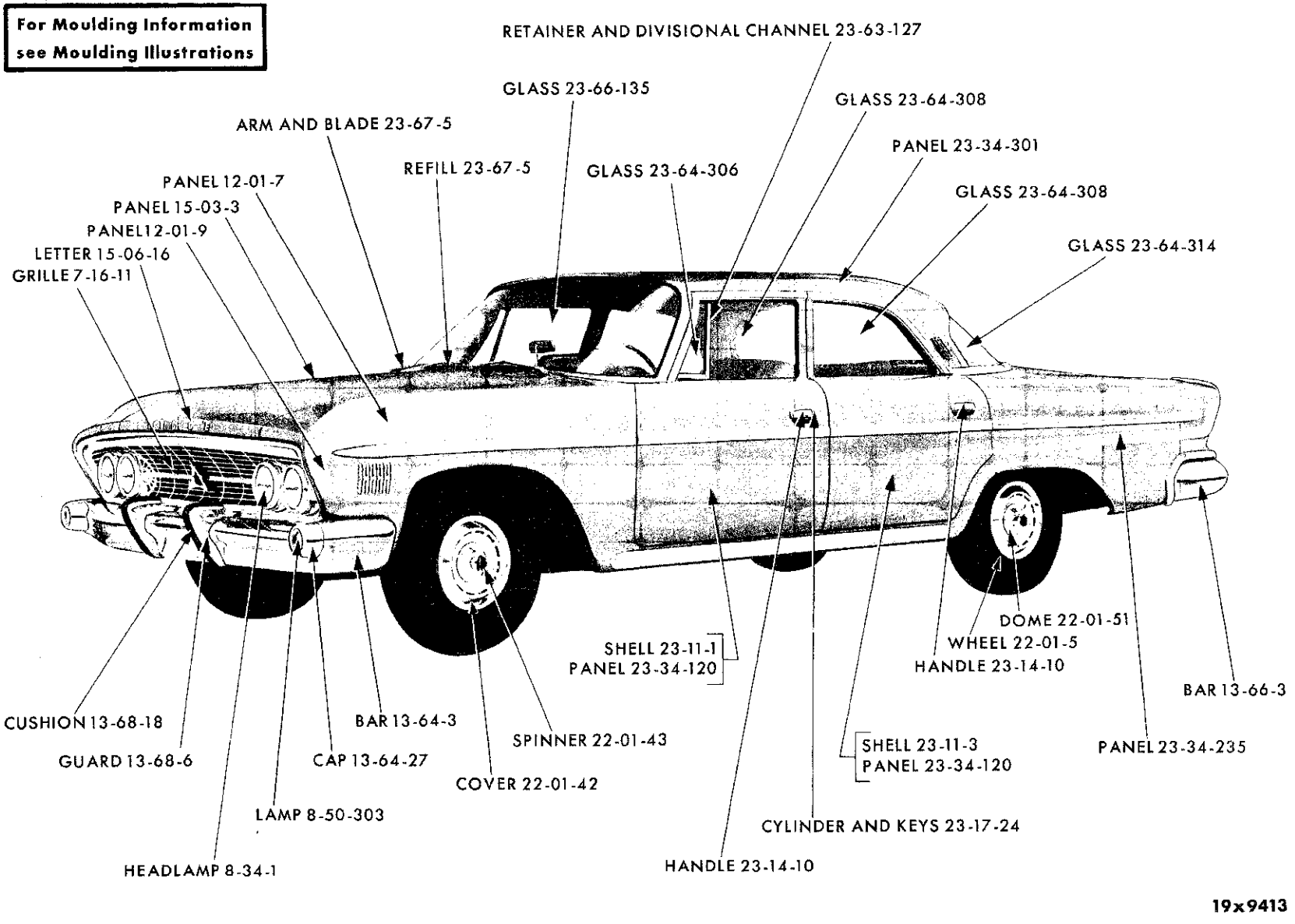

FRONT EXTERIOR - DODGE SD3 4 DOOR SEDAN

MyMopar.com

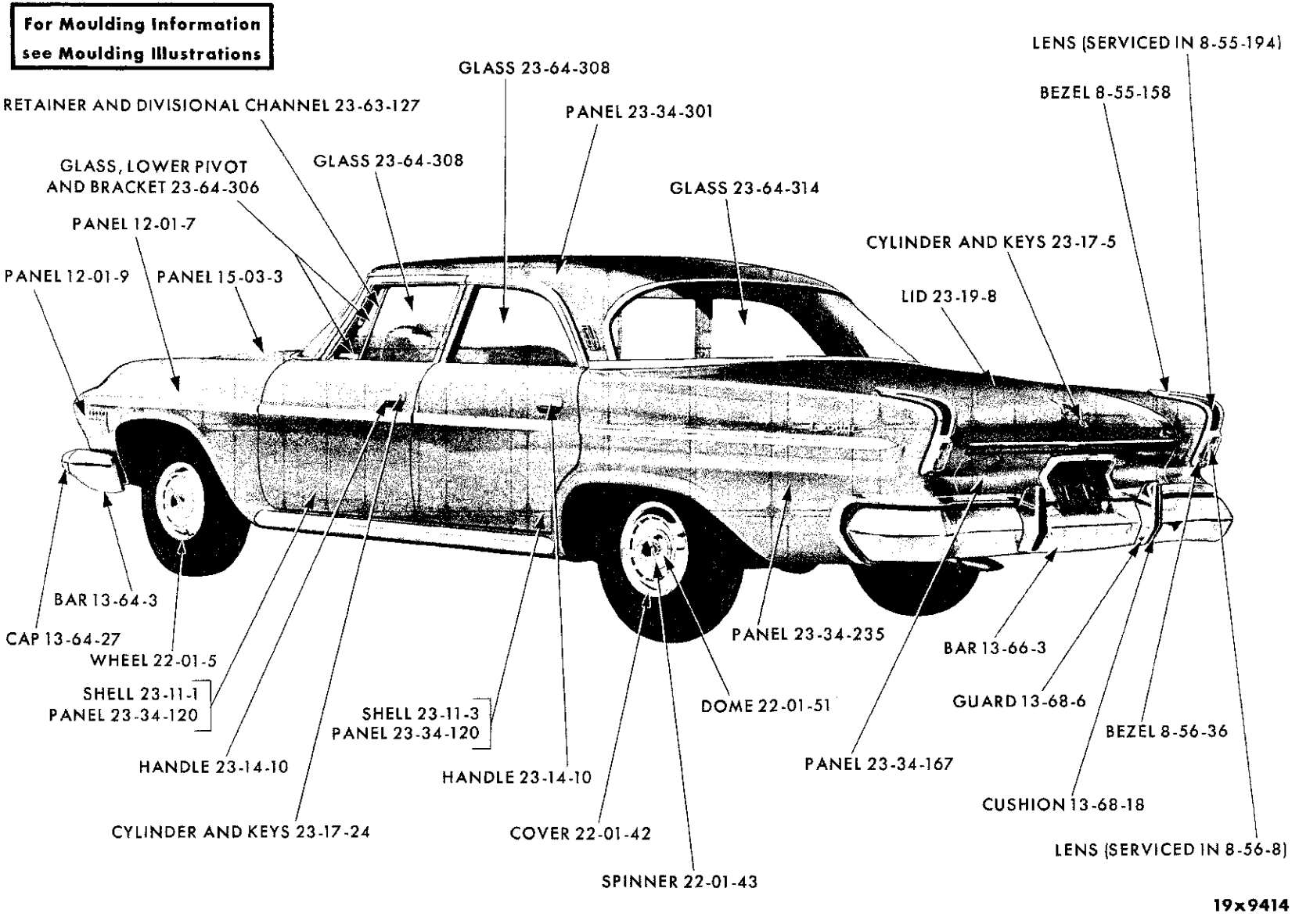

REAR EXTERIOR - DODGE SD3 4 DOOR SEDAN

MyMopar.com

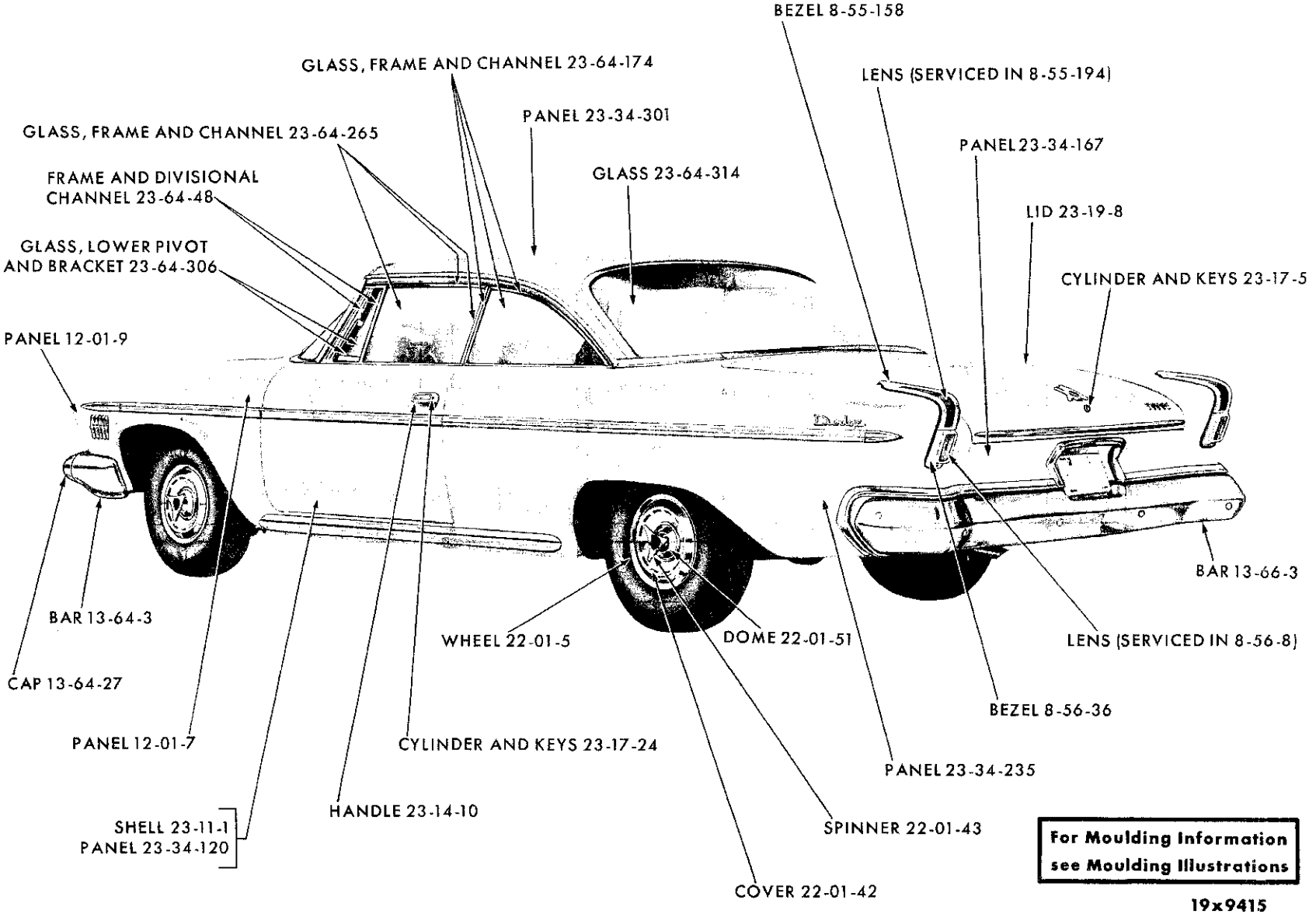

REAR EXTERIOR - DODGE SD3 SPECIAL CLUB COUPE

MyMopar.com

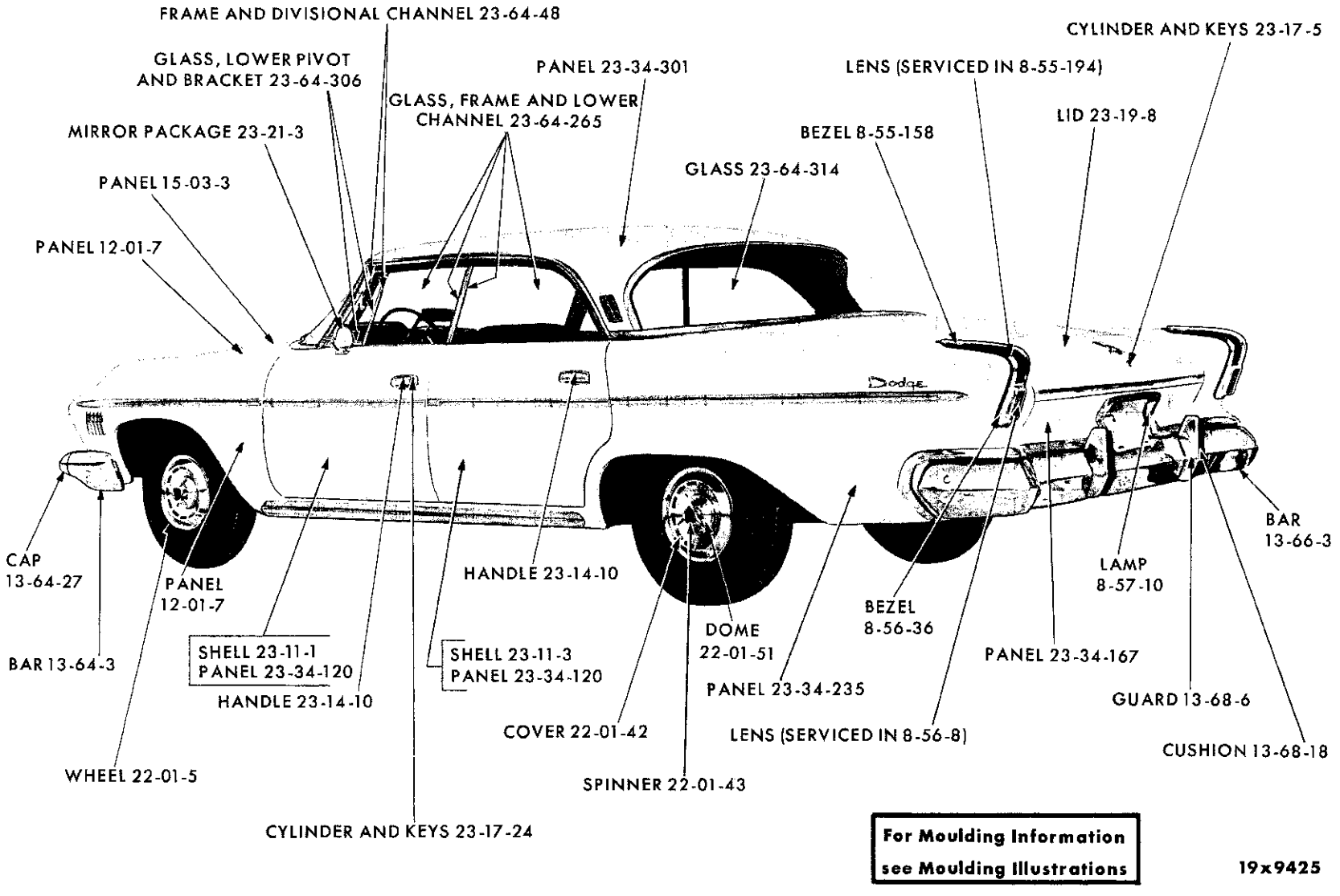

REAR EXTERIOR - DODGE SD3 SPECIAL 4 DOOR SEDAN

MyMopar.com

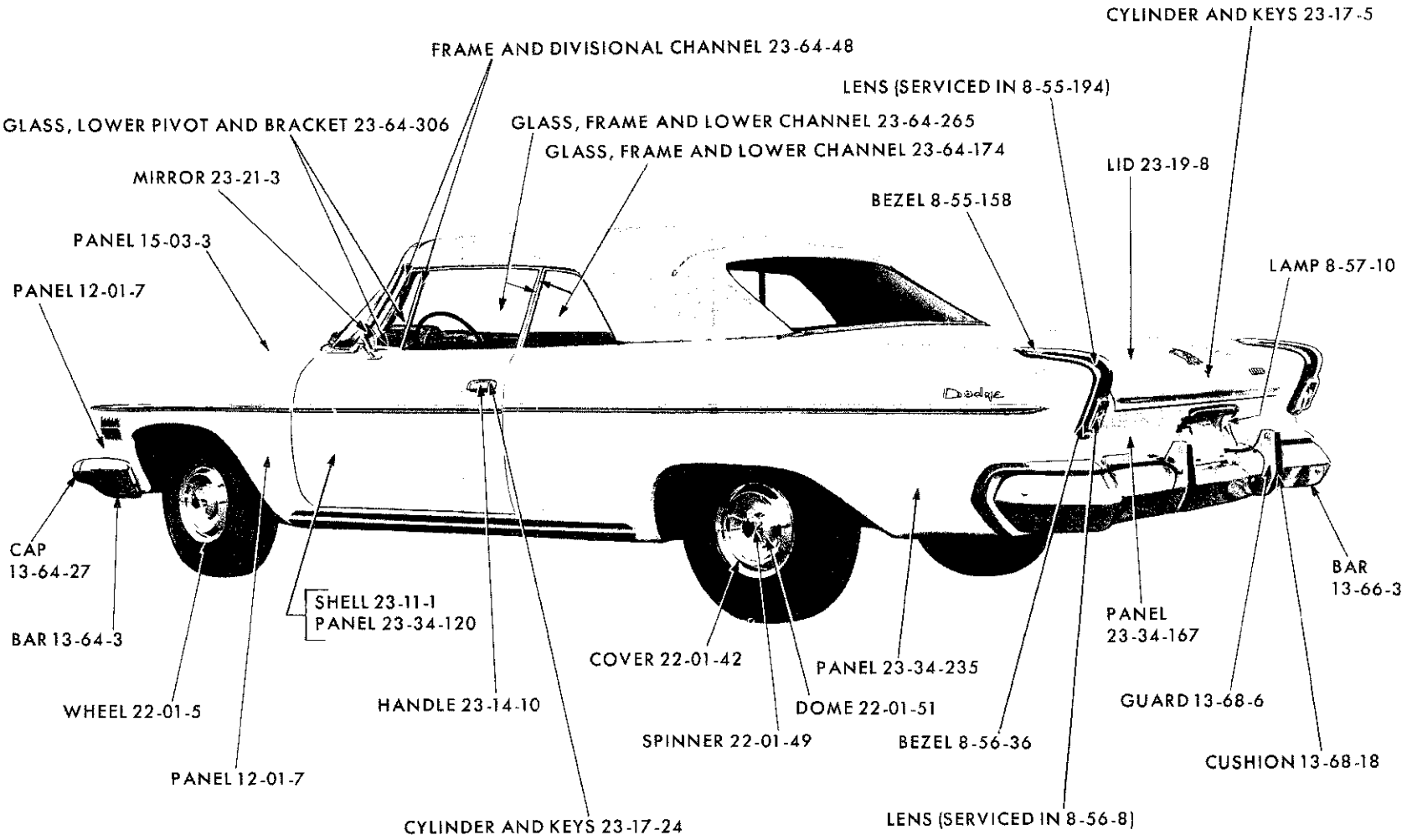

For Moulding Information see Moulding Illustrations

19x9424

REAR EXTERIOR - DODGE SD3 CONVERTIBLE COUPE

MyMopar.com

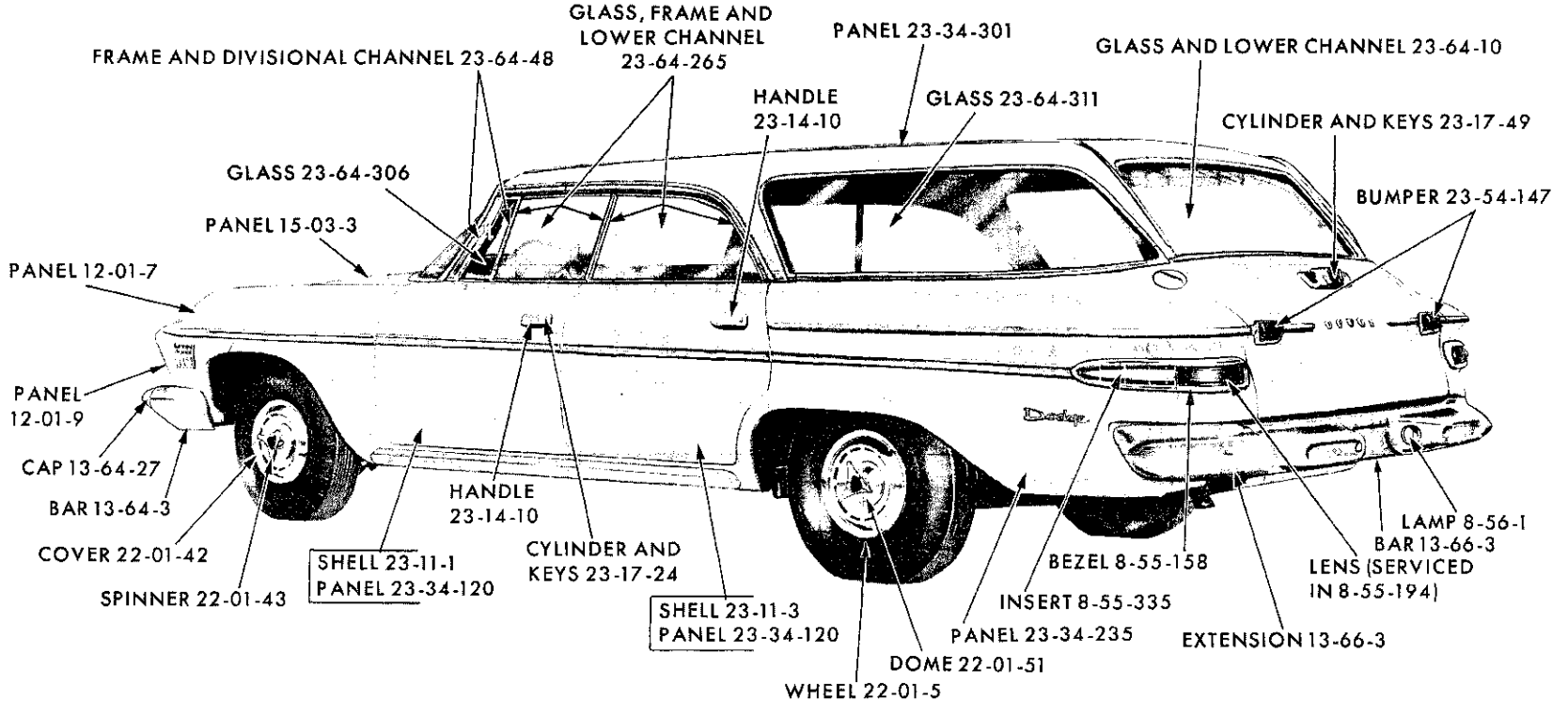

For Moulding Information see Moulding Illustrations

19x9426

REAR EXTERIOR - DODGE SD3 4 DOOR SUBURBAN

MyMopar.com

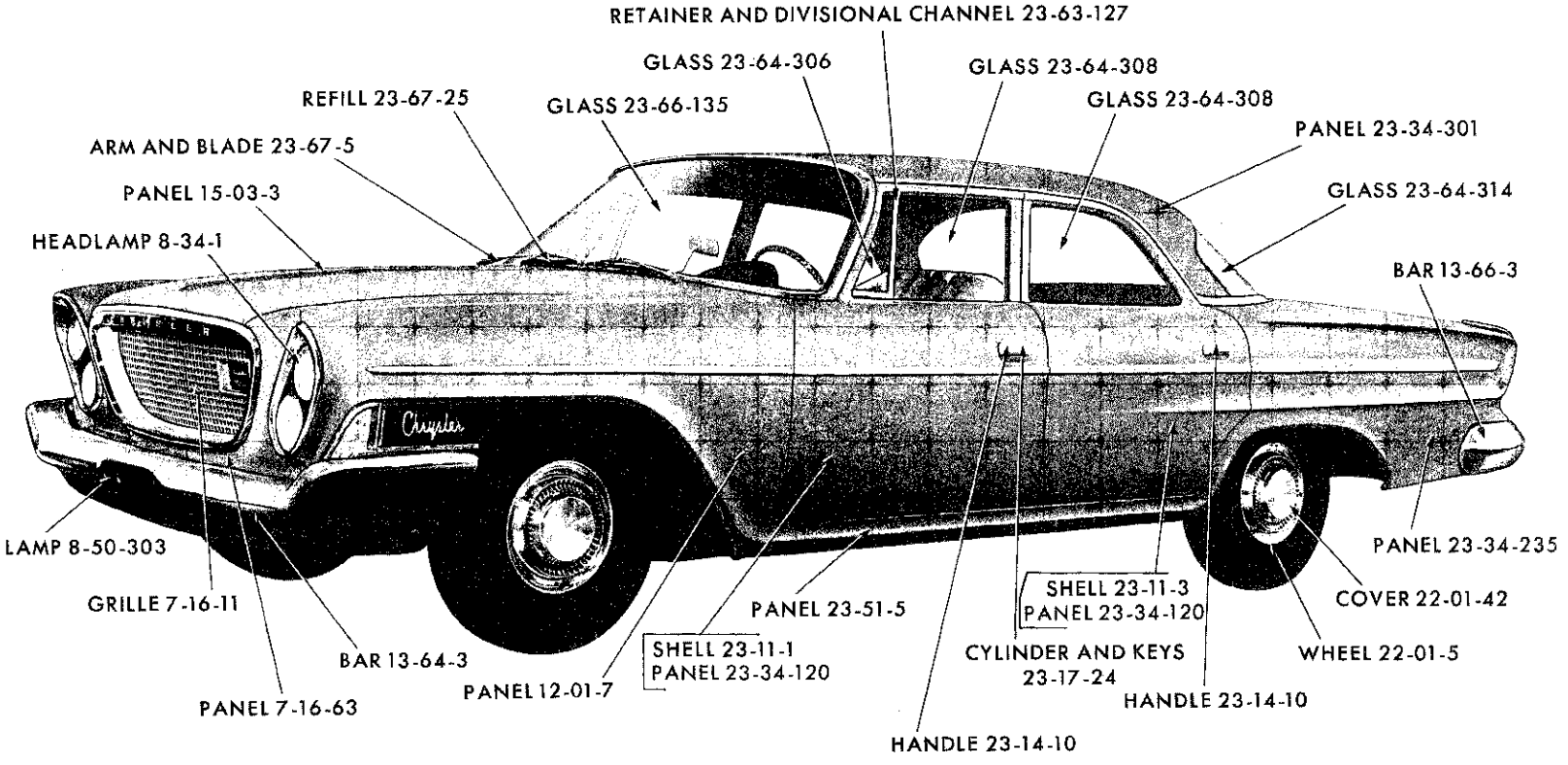

For Moulding Information see Moulding Illustrations

19x9248

FRONT EXTERIOR - CHRYSLER SC1-3 4 DOOR SEDAN

MyMopar.com

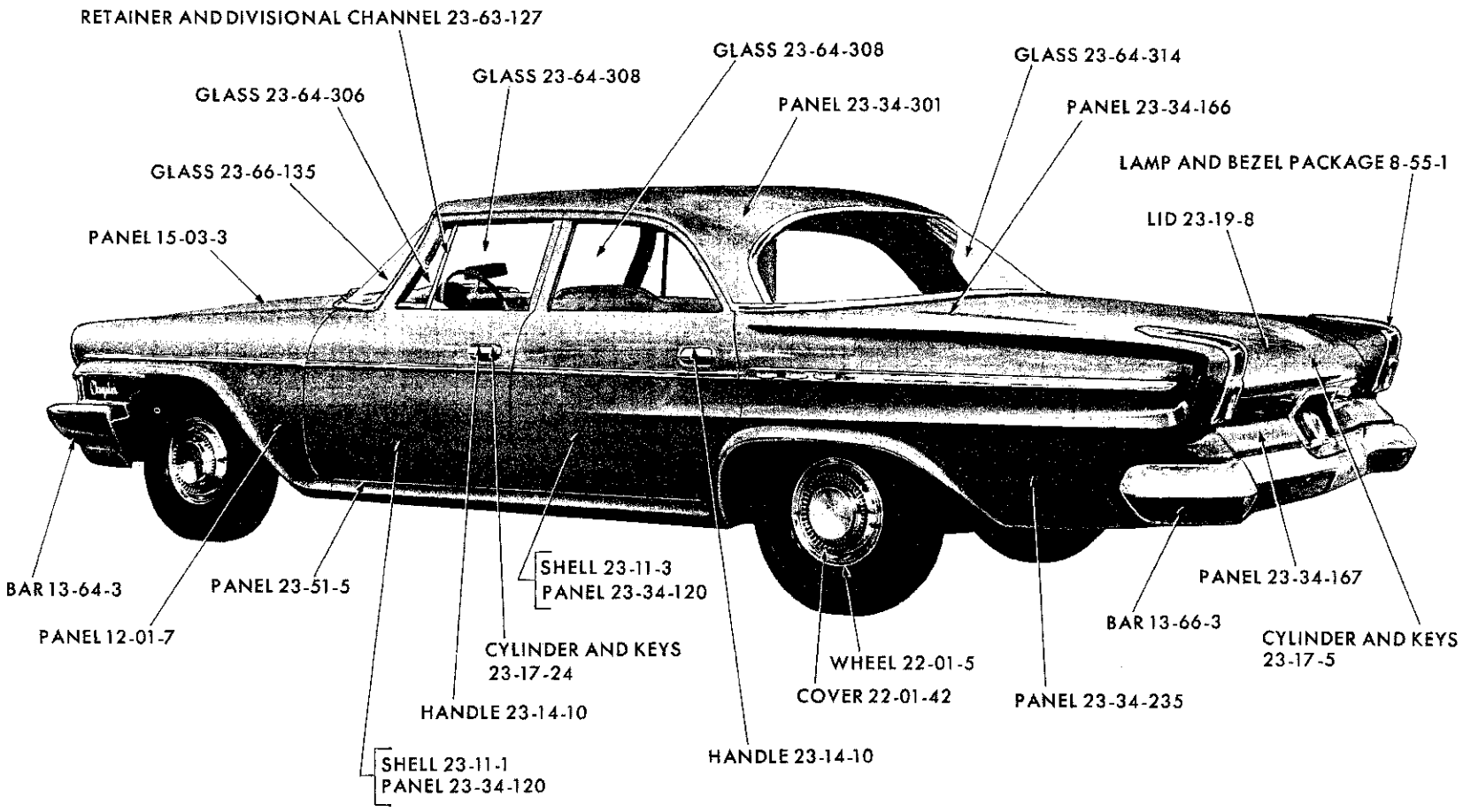

For Moulding Information see Moulding Illustrations

19x9251

REAR EXTERIOR - CHRYSLER SC1-3 4 DOOR SEDAN

MyMopar.com

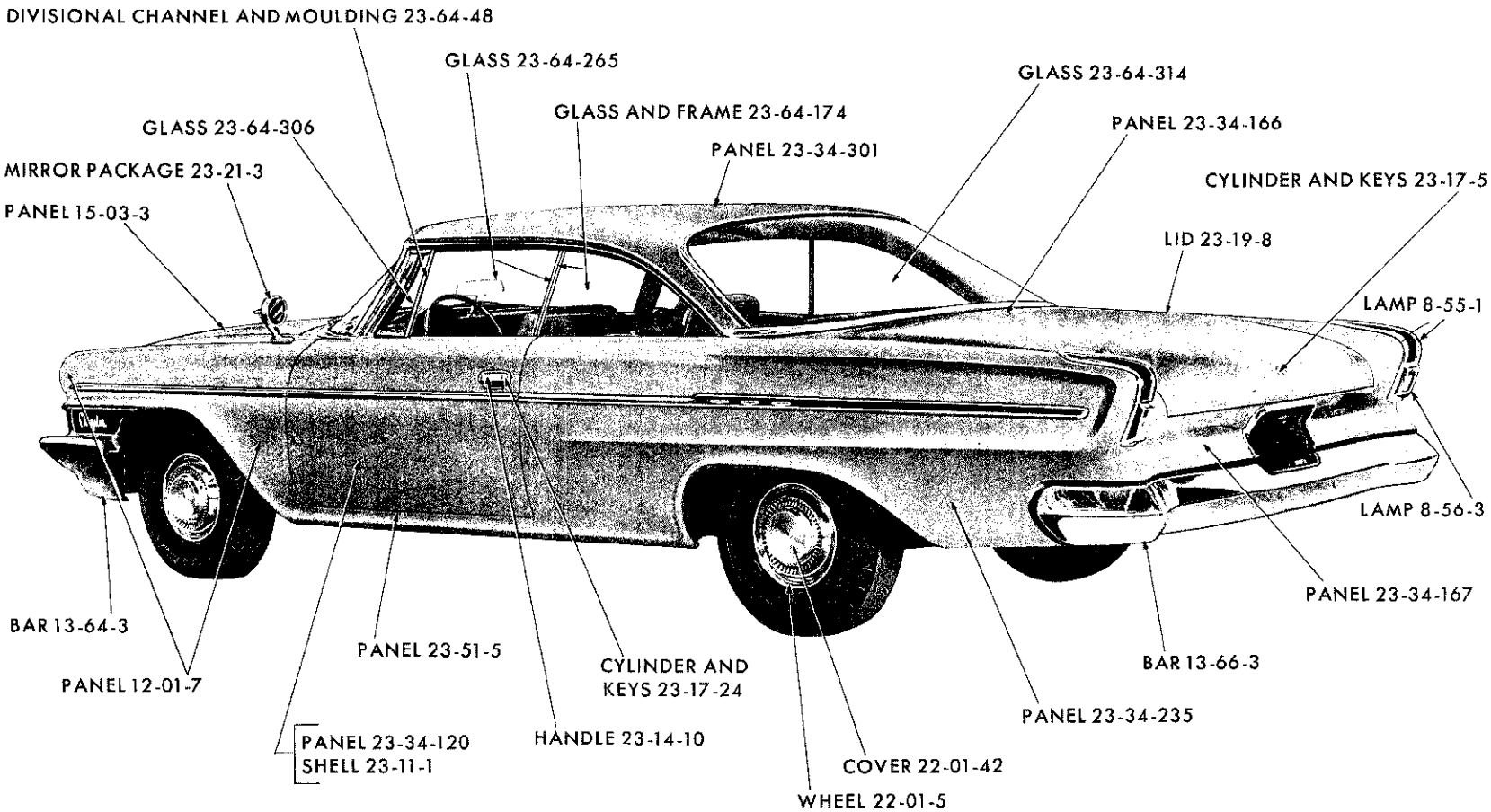

For Moulding Information see Moulding Illustrations

19x9228

REAR EXTERIOR - CHRYSLER SC1-2 SPECIAL CLUB COUPE

MyMopar.com

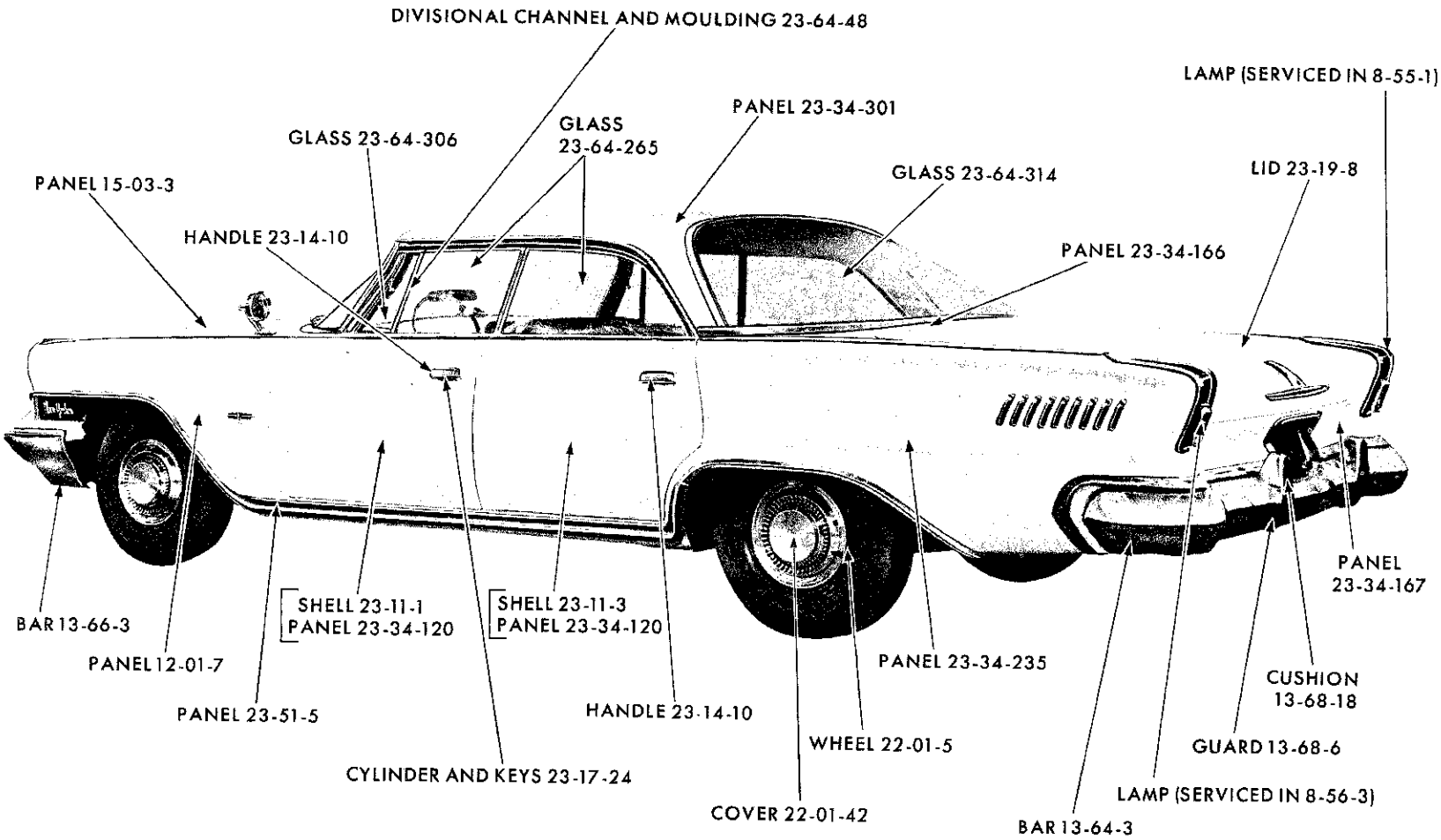

For Moulding Information see Moulding Illustrations

19x9231

REAR EXTERIOR - CHRYSLER SC1-2-3 SPECIAL 4 DOOR SEDAN

MyMopar.com

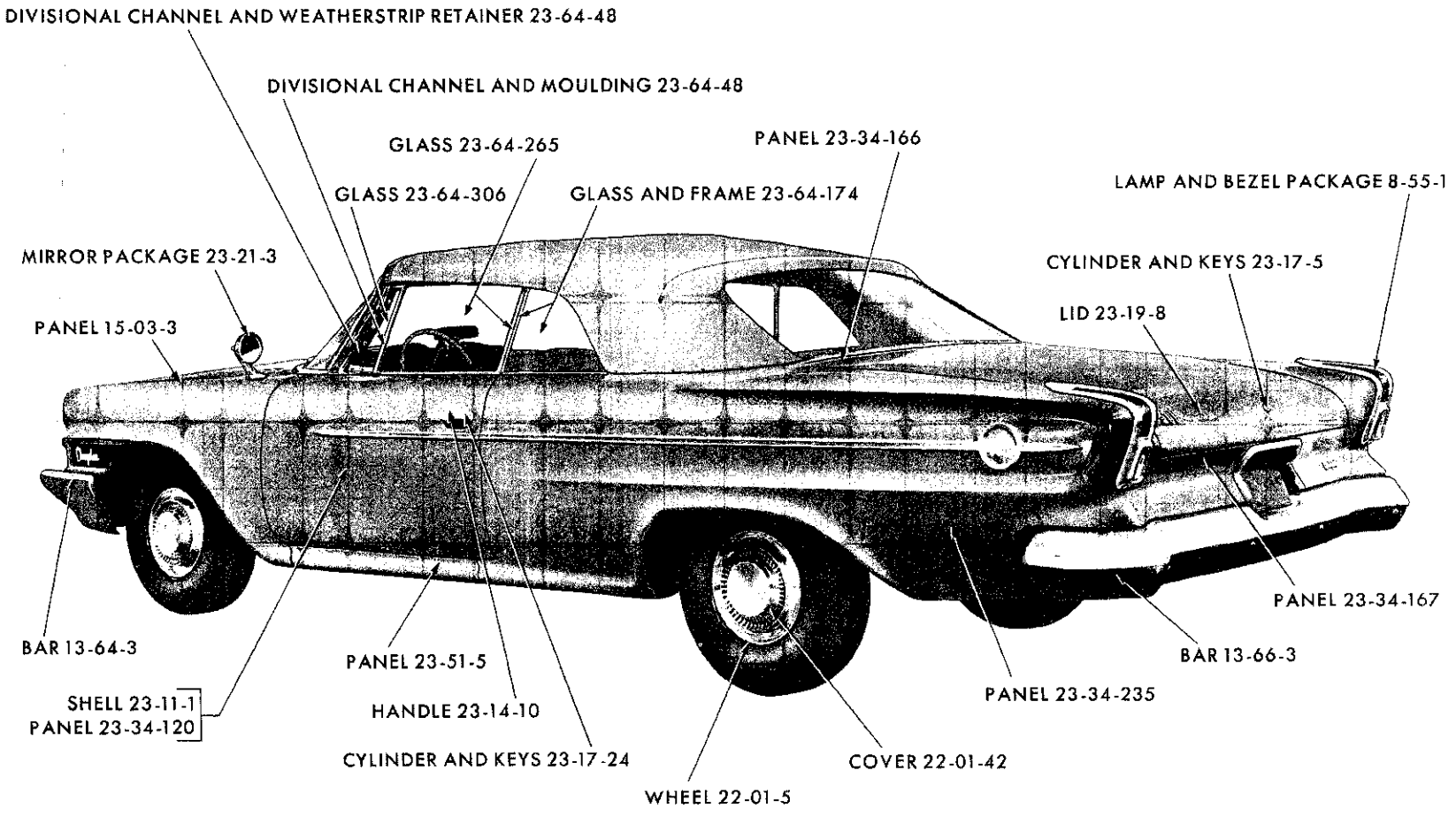

For Moulding Information see Moulding Illustrations

19x9247

REAR EXTERIOR - CHRYSLER SC1-2 CONVERTIBLE COUPE

MyMopar.com

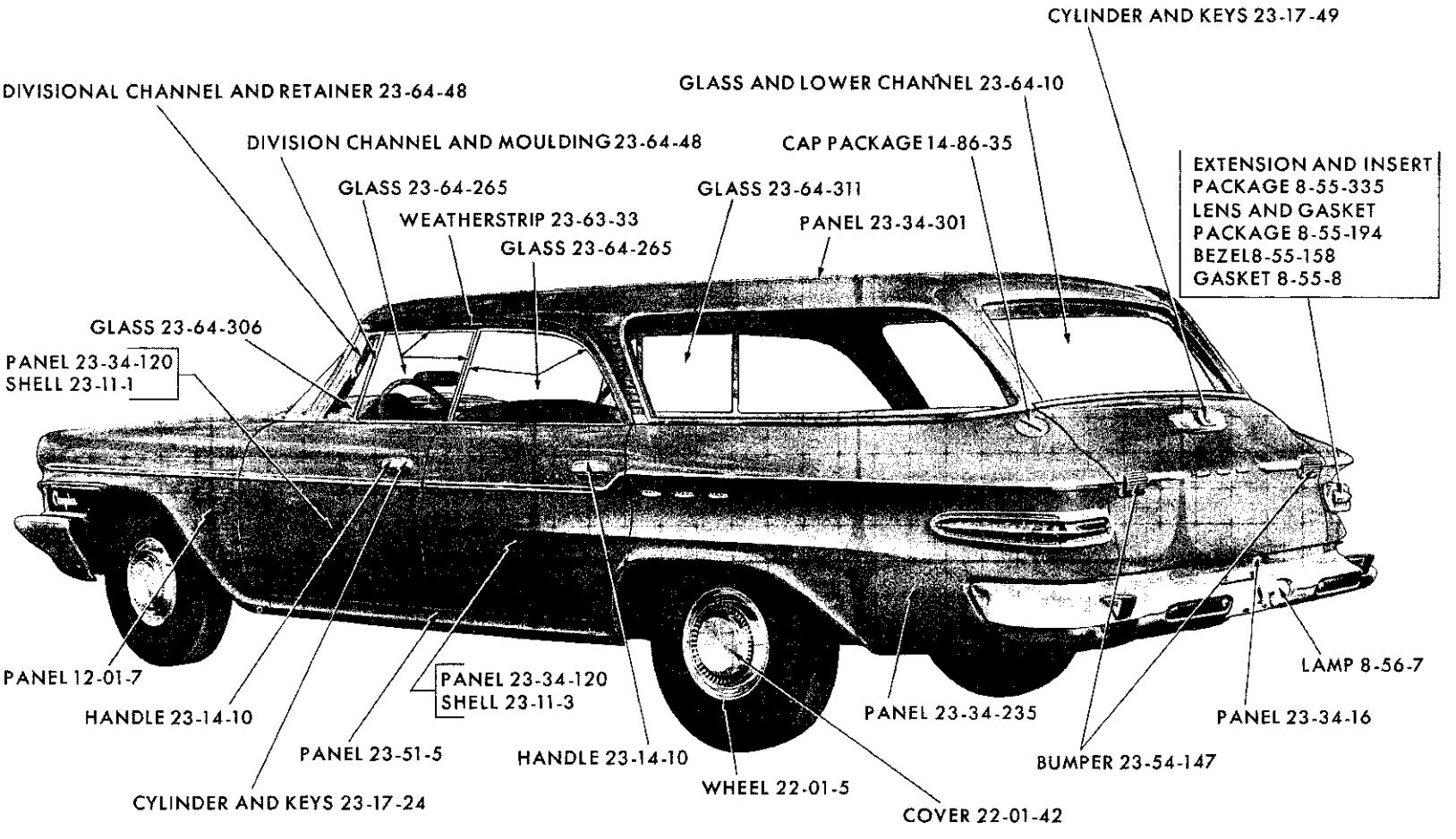

For Moulding Information see Moulding Illustrations

19x9252

REAR EXTERIOR - CHRYSLER SC1-3 SUBURBAN

MyMopar.com

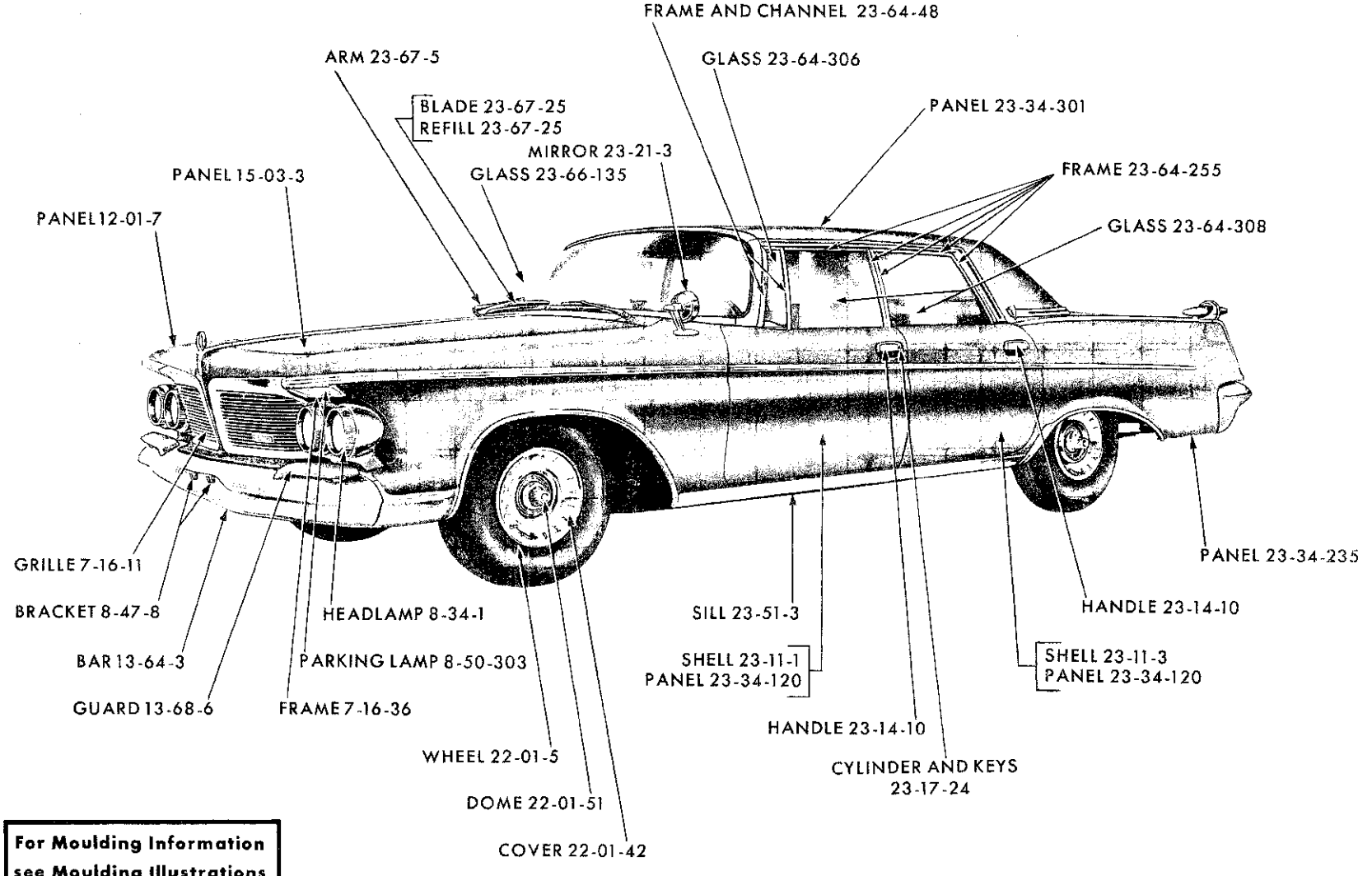

For Moulding Information see Moulding Illustrations

FRONT EXTERIOR - IMPERIAL SY1 SPECIAL 4 DOOR SEDAN

MyMopar.com

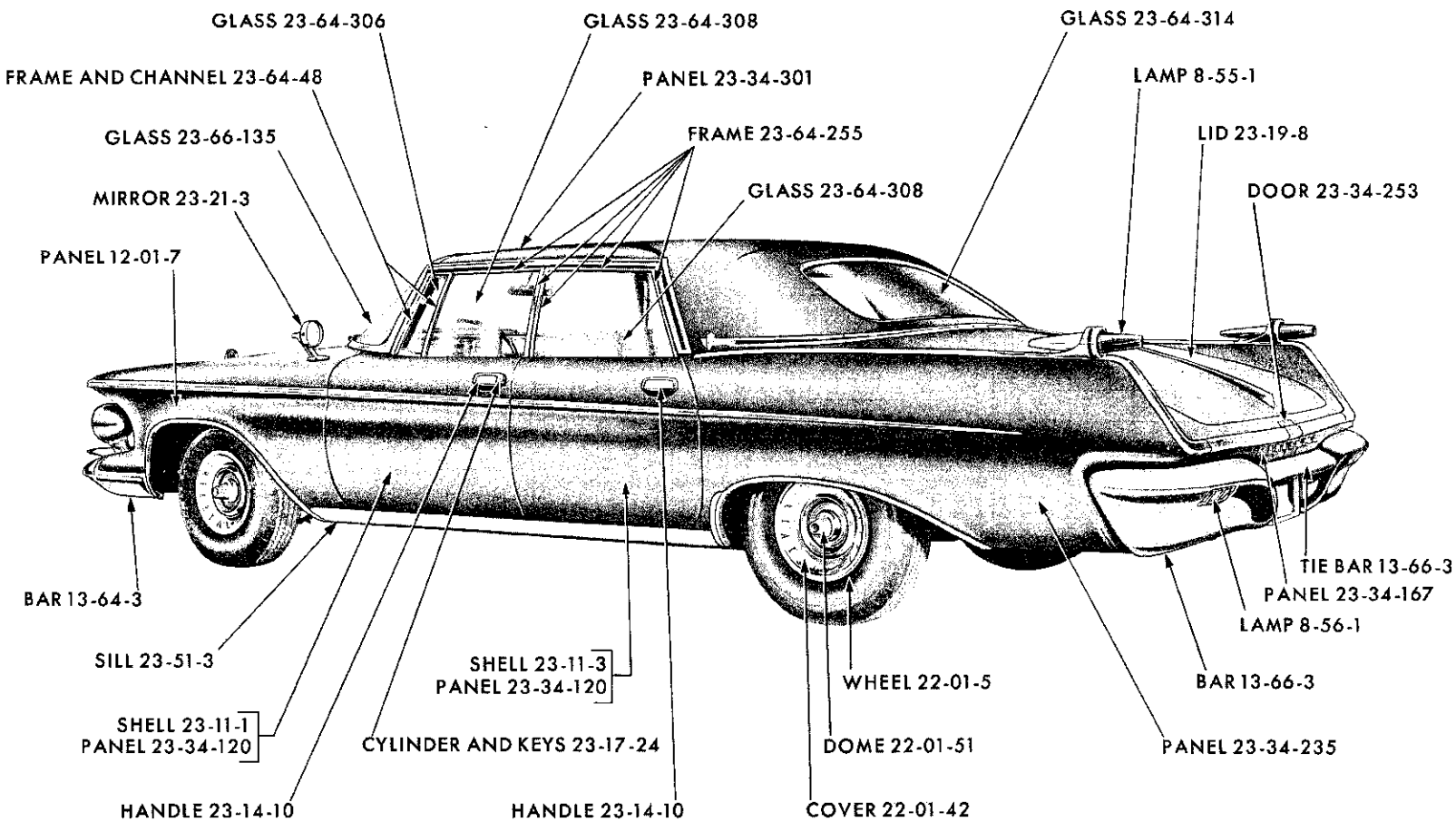

For Moulding Information see Moulding Illustrations

19x9160

REAR EXTERIOR - IMPERIAL SY1 SPECIAL 4 DOOR SEDAN

MyMopar.com

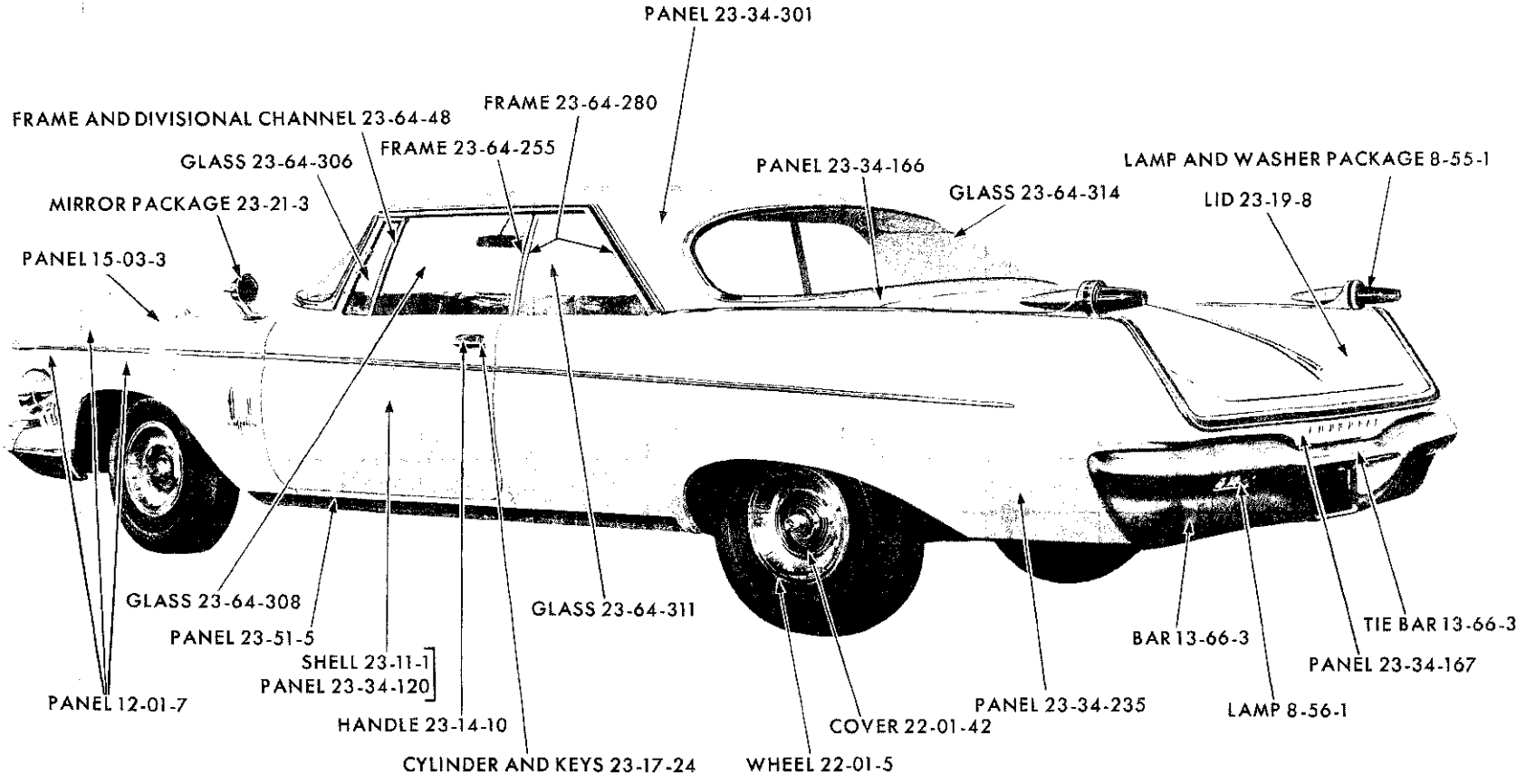

For Moulding Information see Moulding Illustrations

19x9290

REAR EXTERIOR - IMPERIAL SY1 SPECIAL CLUB COUPE

MyMopar.com

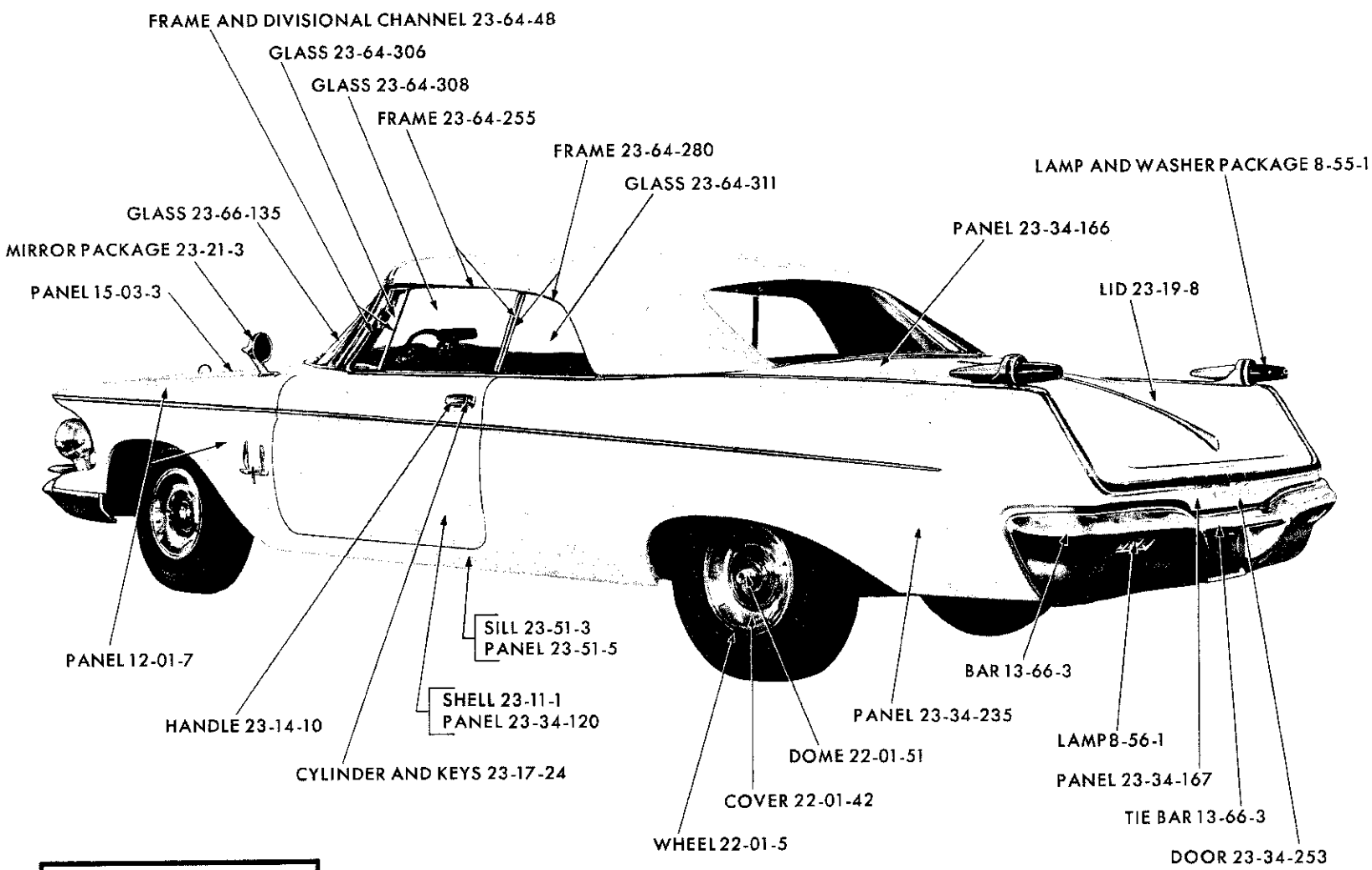

For Moulding Information see Moulding Illustrations

REAR EXTERIOR - IMPERIAL SY1 CONVERTIBLE COUPE

MyMopar.com

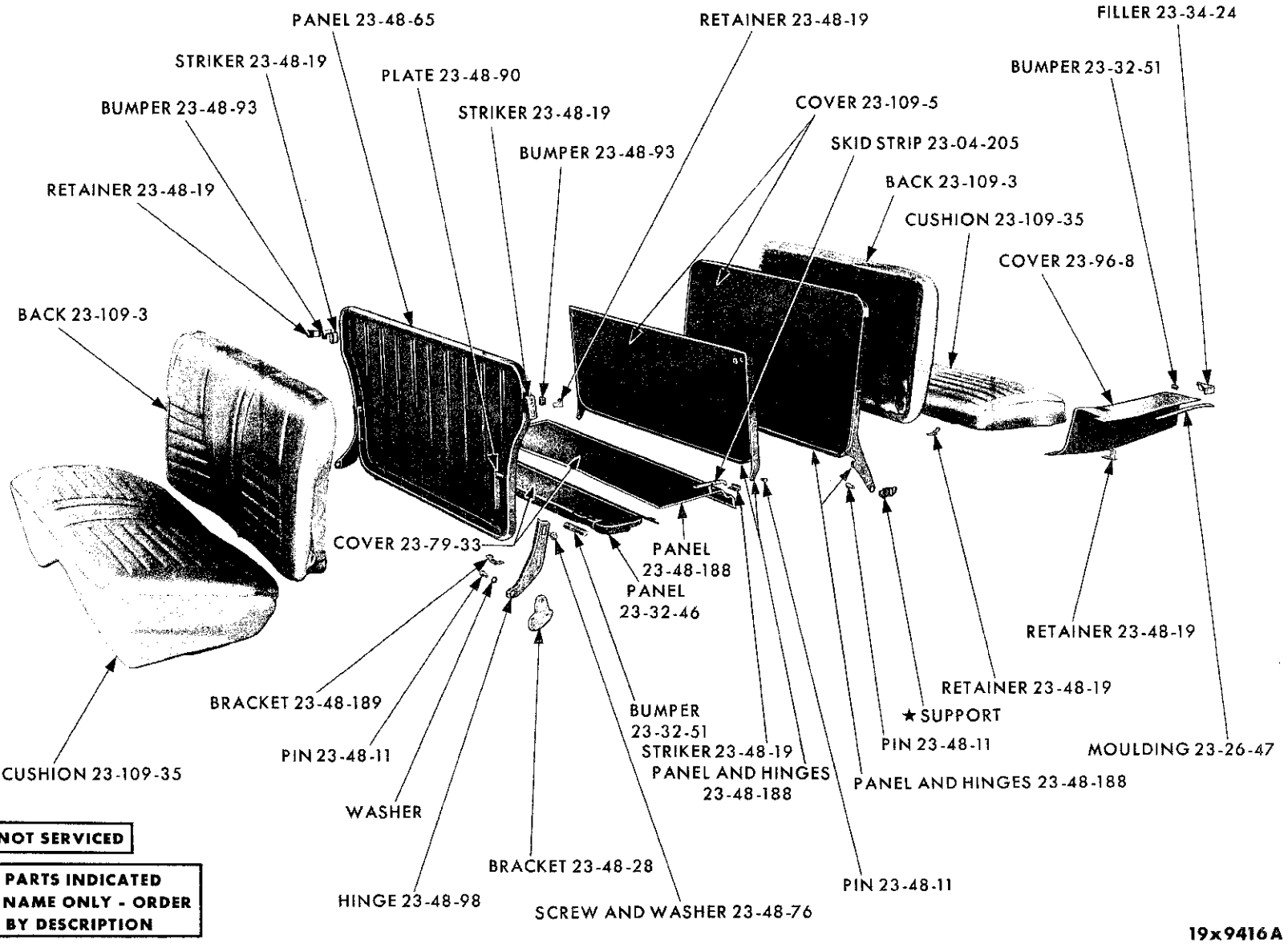

★ NOT SERVICED

PARTS INDICATED BY NAME ONLY - ORDER BY DESCRIPTION

SUBURBAN SEATS - PLYMOUTH SP1-2 AND DART SD1-2

MyMopar.com

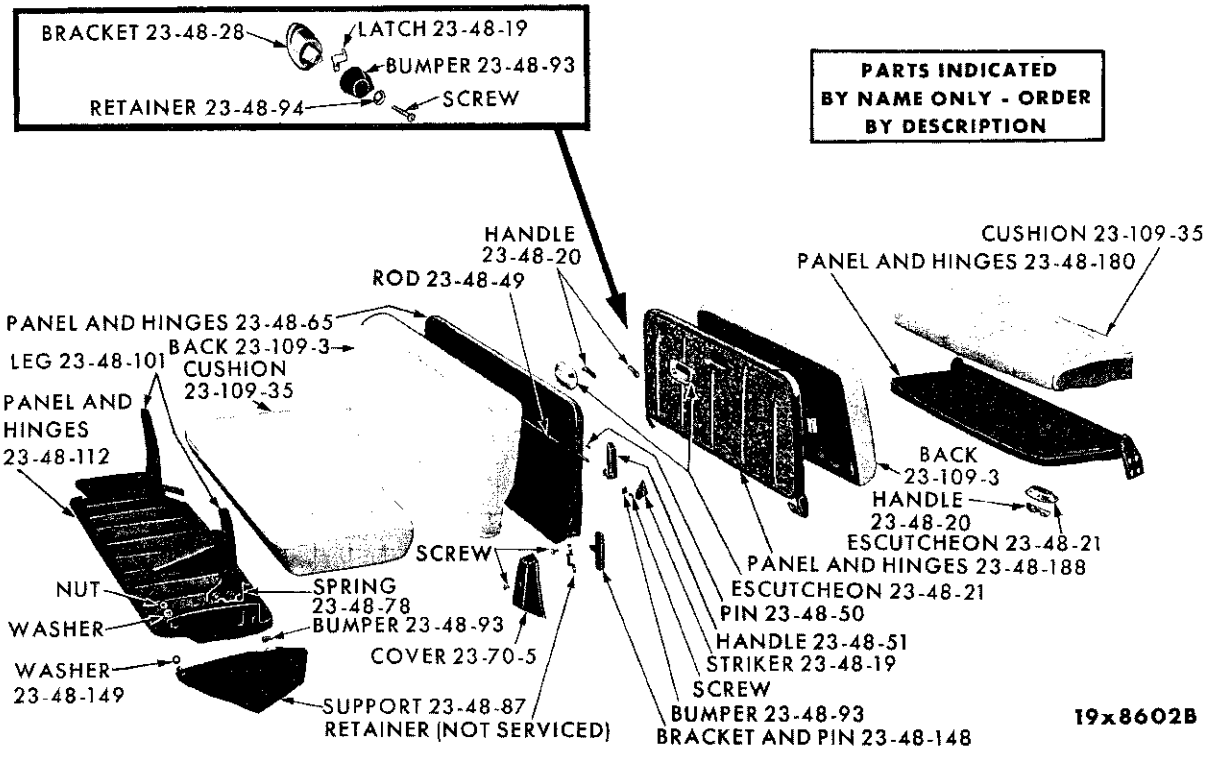

SUBURBAN SEATS - CHRYSLER SC1-2-3

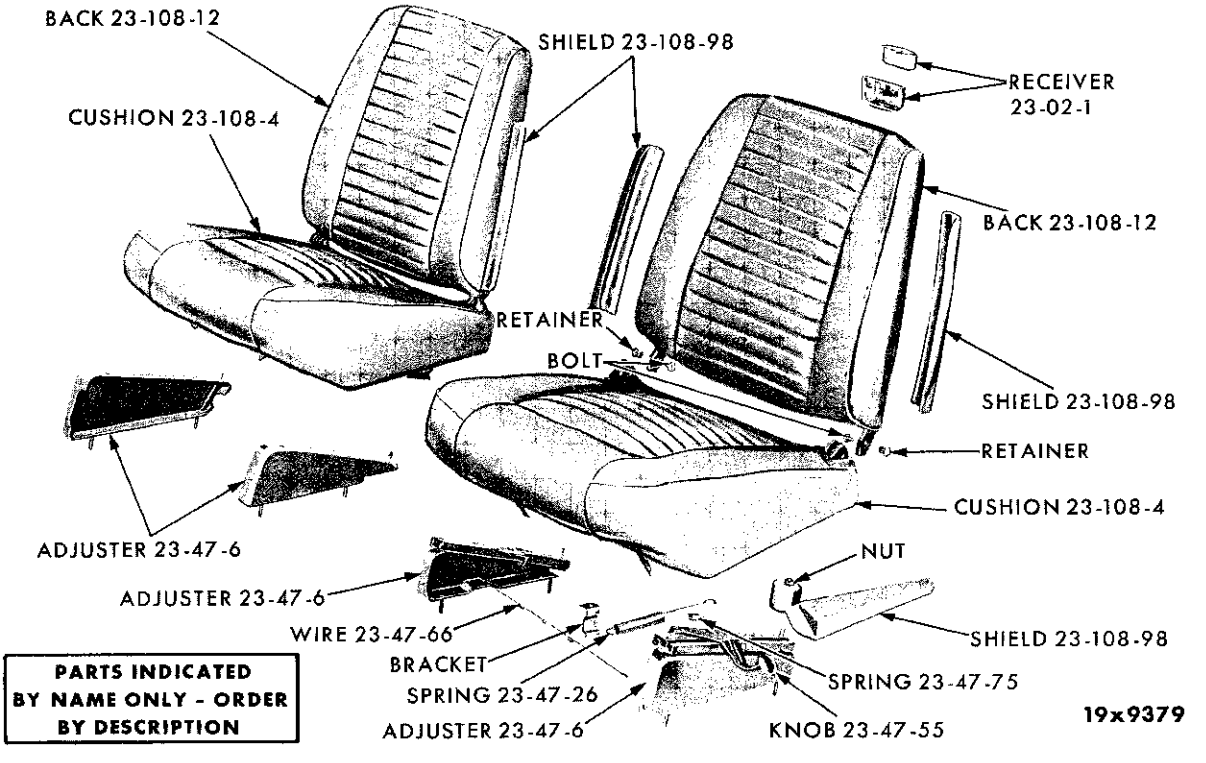

SEATS - VALIANT SV1 AND LANCER SL1

MyMopar.com

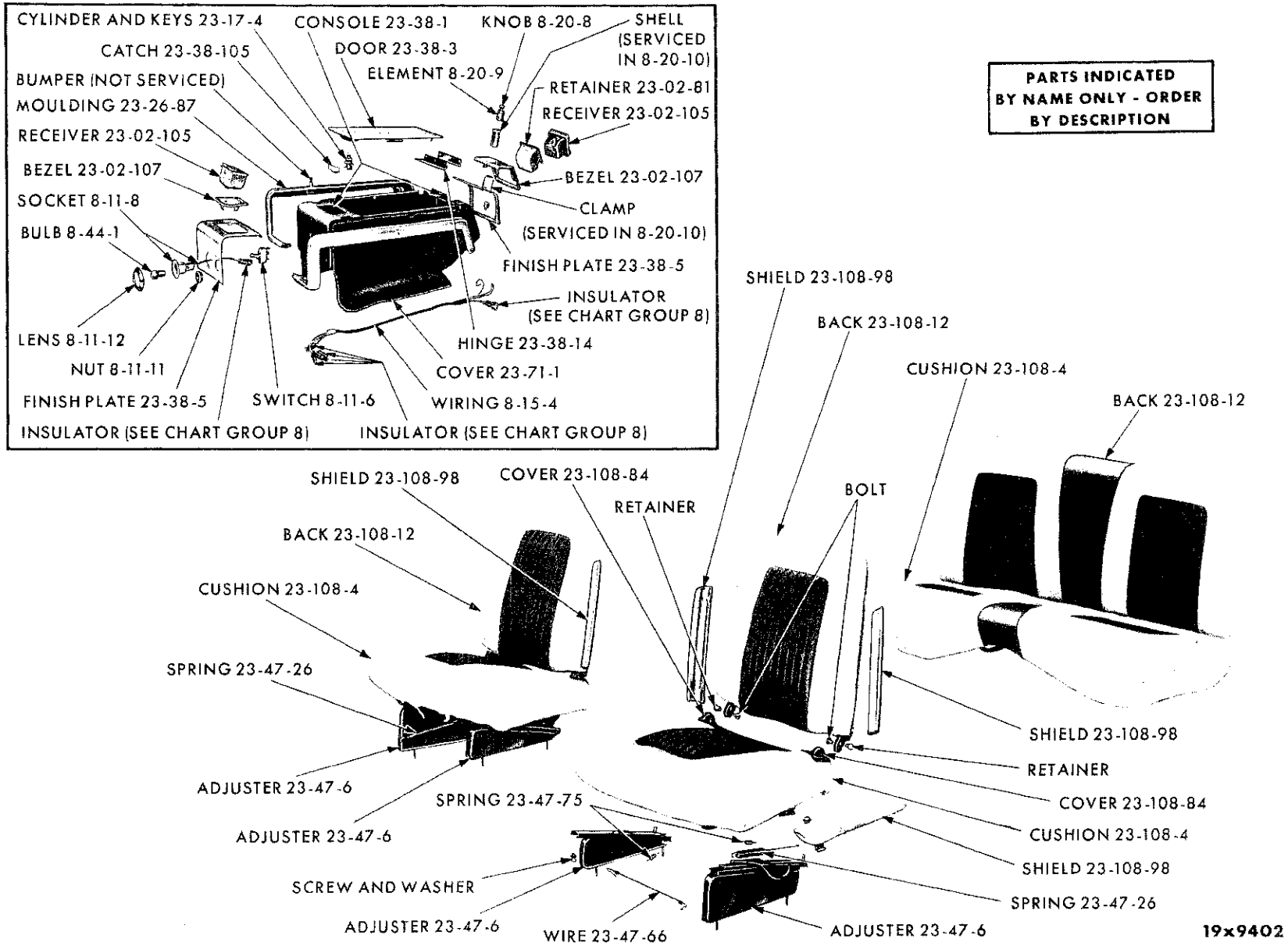

SEATS - DODGE POLARA SD2-P

MyMopar.com

CODE	PART NAME AND DESCRIPTION	PER CAR	VALIANT LANCER	PLYMOUTH DODGE	CHRYSLER IMPERIAL

NOTES

★ Indicates use as required.
⊟ Indicates parts not listed in any previous parts book.

Printed in U.S.A.
Prices and specifications subject to change without notice.

MyMopar.com

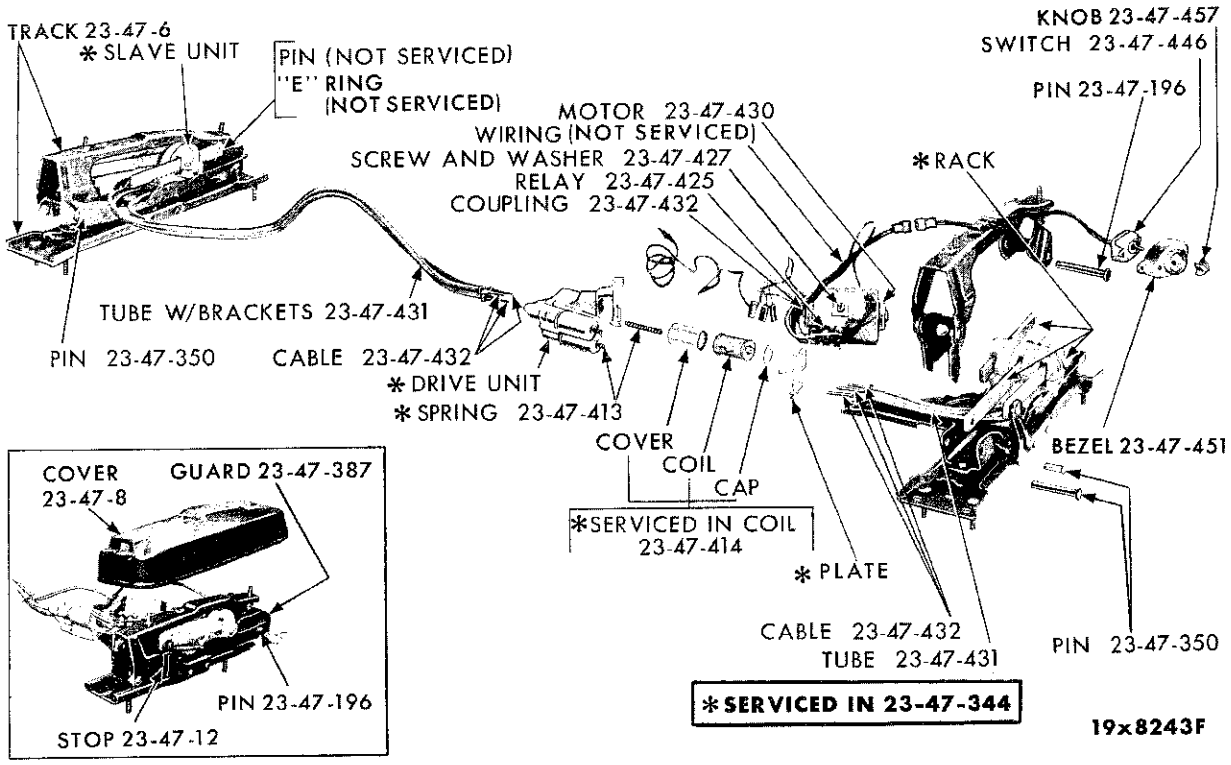

ELECTRIC SEAT ADJUSTER

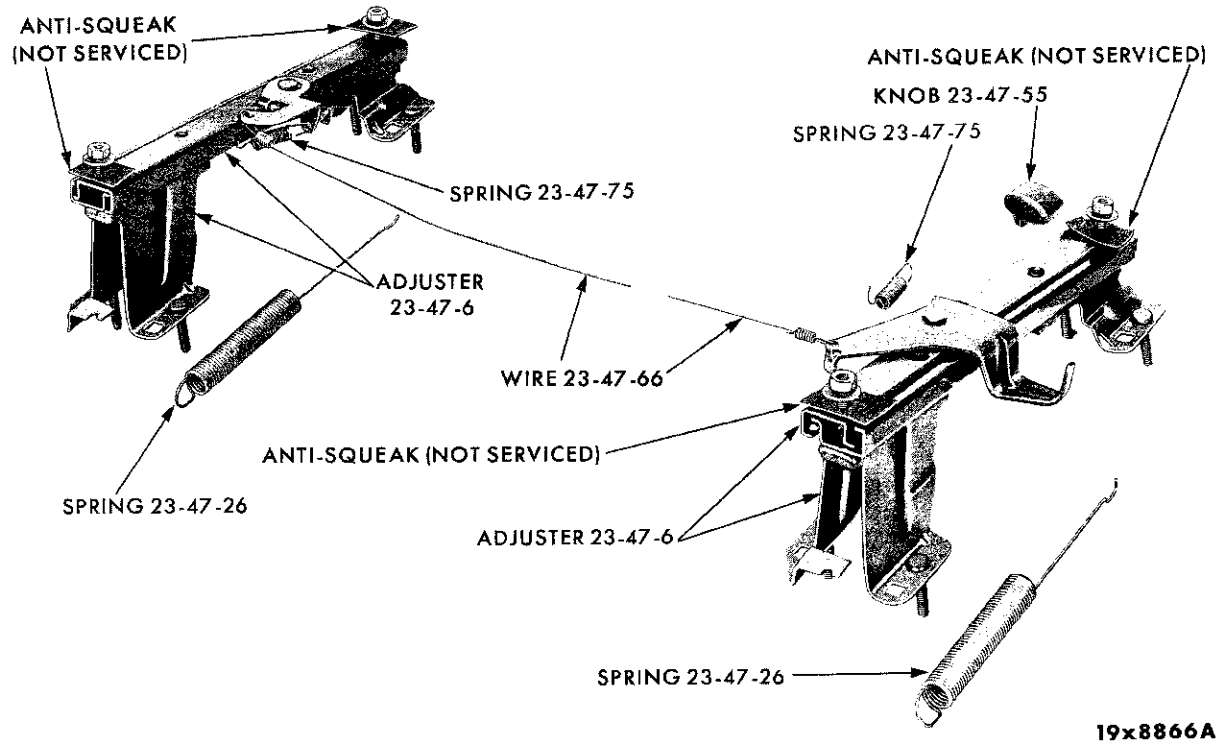

MANUAL SEAT ADJUSTER - VALIANT SV1 AND LANCER SL1

MyMopar.com

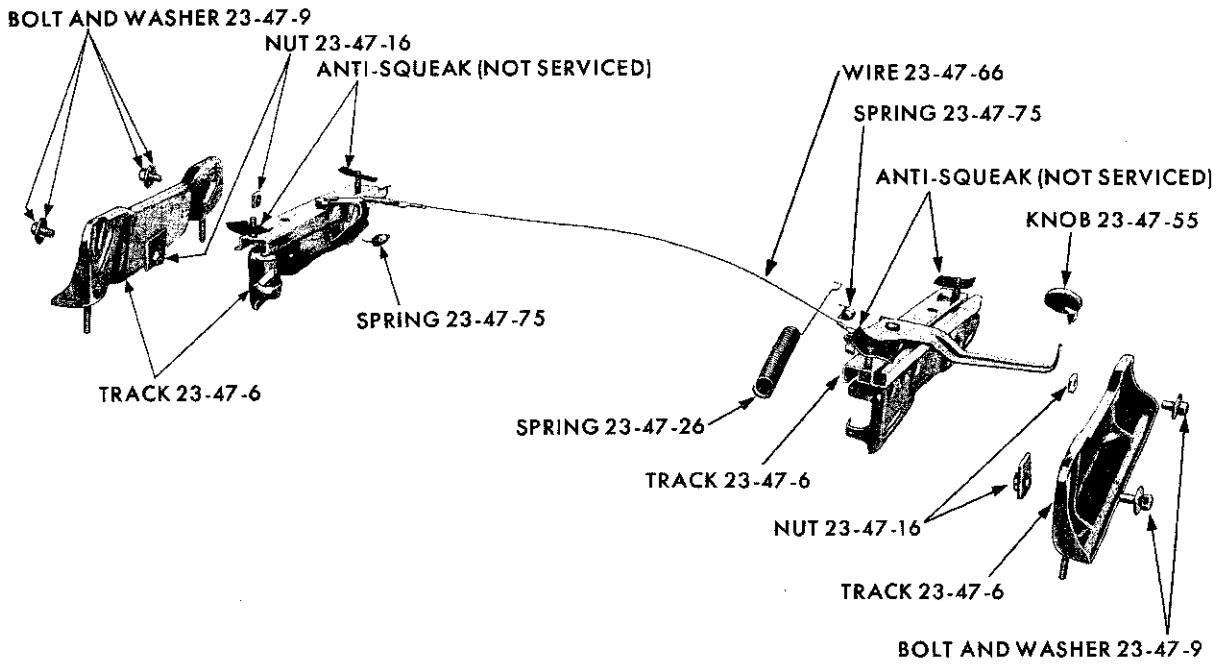

19x8815

MANUAL SEAT ADJUSTER - EXCEPT VALIANT SV1 AND LANCER SL1

NOTES

MyMopar.com

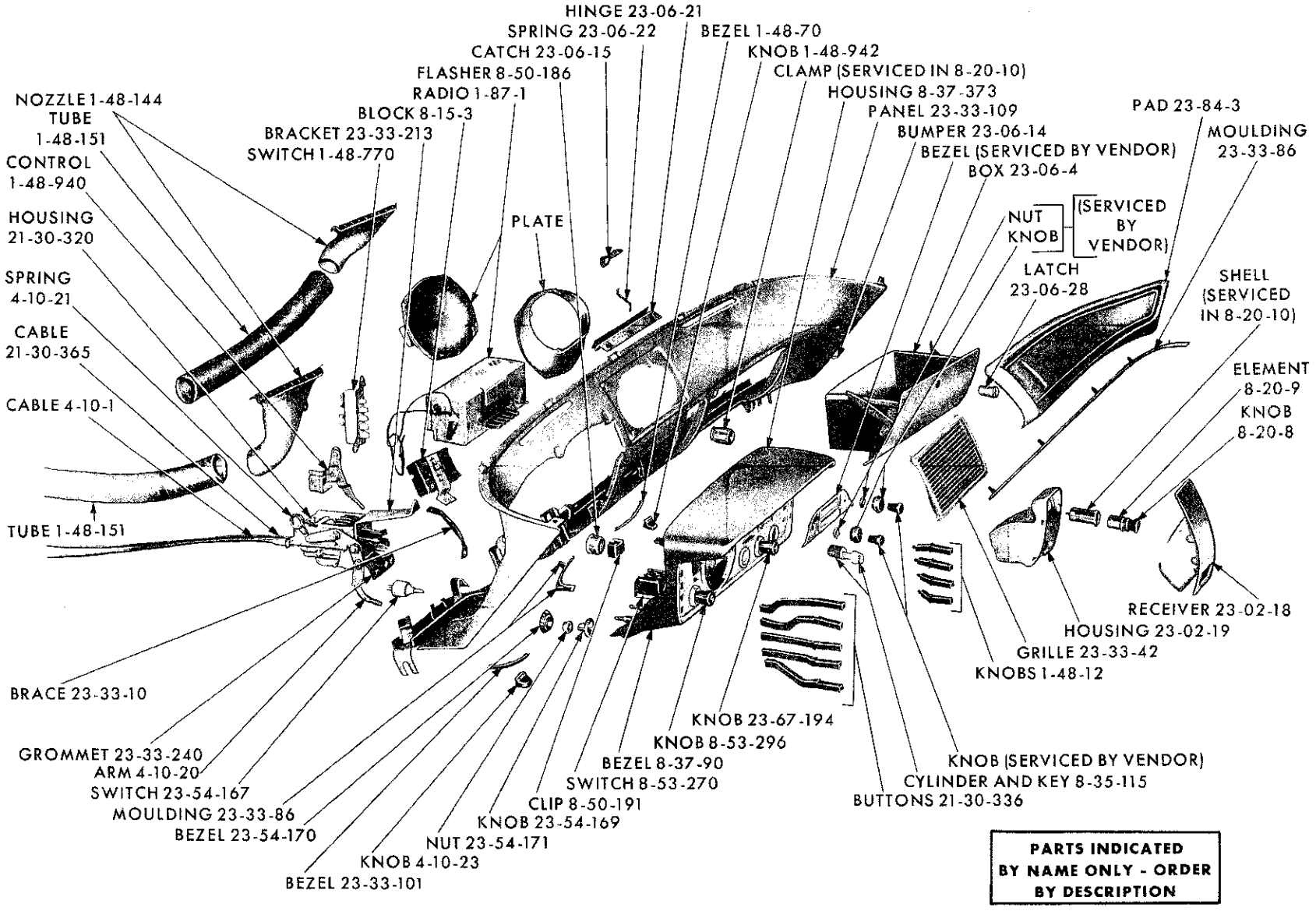

INSTRUMENT PANEL - VALIANT SV1 AND LANCER SL1

MyMopar.com

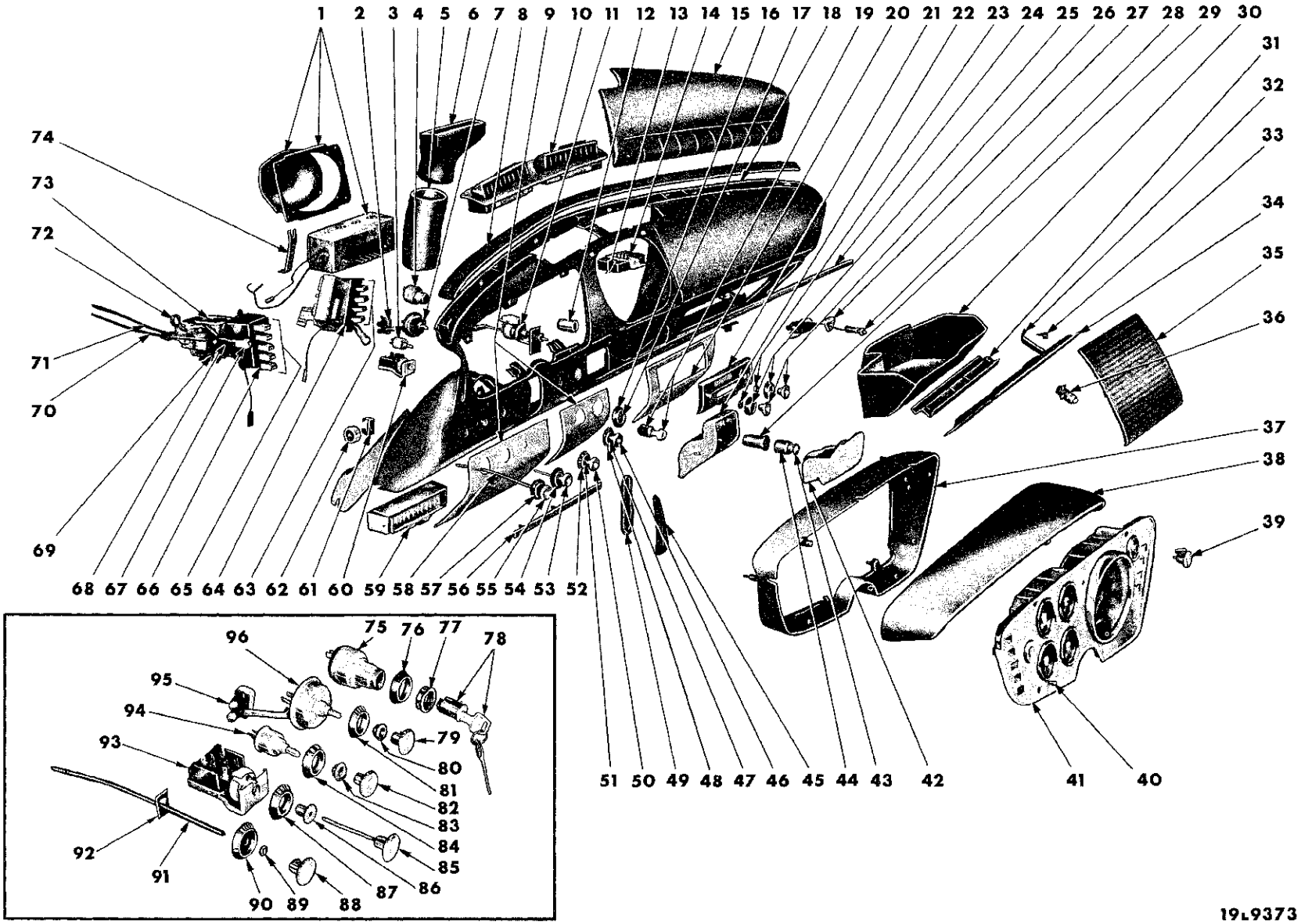

INSTRUMENT PANEL - PLYMOUTH SP1-2

MyMopar.com

INSTRUMENT PANEL - PLYMOUTH SP1-2

Ref. No.	Name	Part Type Code
1	Radio	1-87-1
2	Circuit Breaker	23-67-163
3	Switch	23-54-167
4	Switch	8-35-59
5	Tube	24-28-24
6	Connector	
7	Switch	23-67-160
8	Moulding	23-22-145
9	Plate	23-33-135
10	Bezel and Louver	24-28-75
11	Switch	1-48-770
12	Clamp (Serviced in 8-20-10)	
13	Fuse	8-17-2
14	Block	8-15-3
15	Pad	23-84-3
16	Bezel	8-35-85
17	Retainer	8-35-95
18	Panel	23-33-109
19	Cylinder and Key	8-35-115
20	Plate	23-33-135
21	Plate (Service Vendor)	
22	Housing	23-02-19
23	Spacer (Service Vendor)	
24	Moulding	23-33-86
25	Bezel (Service Vendor)	
26	Knob (Service Vendor)	
27	Catch	23-06-15
28	Lamp	1-19-1
29	Shell (Serviced in 8-20-10)	
30	Box	23-06-4
31	Hinge	23-06-21
32	Arm	23-06-13
33	Bumper	23-06-14
34	Door	23-06-10
35	Grille	23-33-42
36	Latch	23-06-28
37	Housing	8-37-178
38	Hood	23-33-129
39	Knob	1-48-801
40	Knob, Clock (Service Vendor)	
41	Bezel	8-37-90
42	Receiver	23-02-18
43	Knob	8-20-8
44	Element	8-20-9
45	Bezel	23-33-101
46	Knob	23-67-194
47	Nut	23-67-161
48	Bezel	23-67-195
49	Gasket	23-33-103
50	Knob	23-54-169
51	Nut	23-54-171
52	Bezel	23-54-170
53	Knob	8-53-296
54	Bezel	8-53-294
55	Knob	4-25-3
56	Moulding	23-33-86
57	Bezel	23-33-231
58	Rod	4-25-14
59	Spot Cooler	24-28-387
60	Switch	8-53-270
61	Clip	8-50-191
62	Flasher	8-50-186
63	Buttons	1-48-12 & 24-24-164
64	Control	1-48-4
65	Buttons	21-30-336
66	Gasket	23-33-227
67	Knob	4-10-23
68	Arm	4-10-20
69	Lever	4-10-20
70	Cable	4-10-1
71	Cable	21-30-365
72	Spring	4-10-3
73	Housing	21-30-320
74	Bracket	Not Serviced
75	Switch	8-35-59
76	Bezel	8-35-85
77	Retainer	8-35-95
78	Cylinder and Key	8-35-115
79	Knob	23-67-194
80	Nut	23-67-161
81	Bezel	23-67-195
82	Knob	23-54-169
83	Nut	23-54-171
84	Bezel	23-54-170
85	Knob	8-53-296
86	Retainer	Not Serviced
87	Bezel	8-53-294
88	Knob	4-25-3
89	Washer	4-25-5
90	Bezel	23-33-231
91	Rod	4-25-14
92	Nut	23-33-236
93	Switch	8-53-270
94	Switch	23-54-167
95	Circuit Breaker	23-67-163
96	Switch	23-67-160

PARTS INDICATED BY NAME ONLY - ORDER BY DESCRIPTION

MyMopar.com

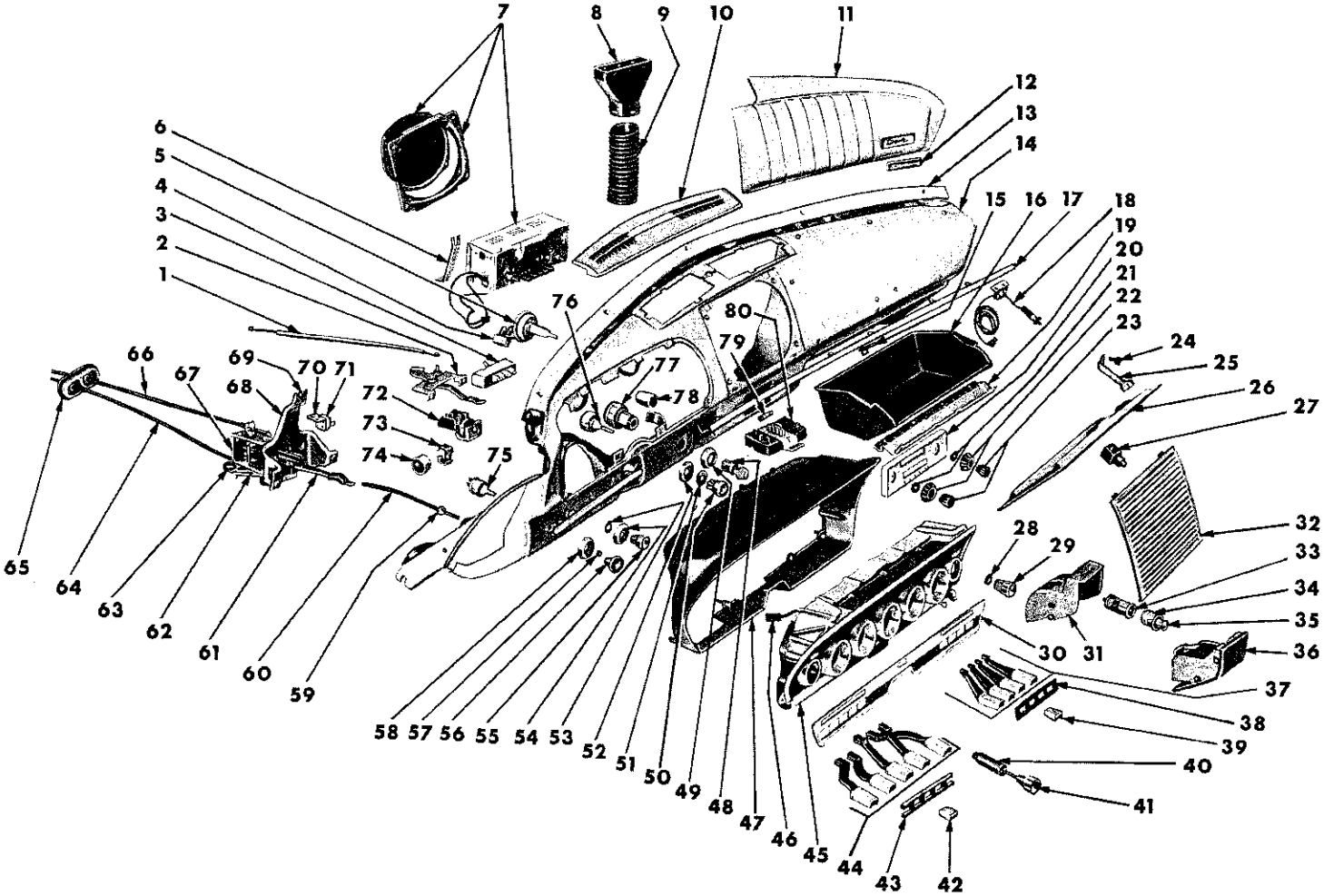

19L9372

INSTRUMENT PANEL - DART SD1-2

MyMopar.com

INSTRUMENT PANEL - DART SD1-2

Ref. No.	Name	Part Type Code
1	Cable	1-48-941
2	Control	1-48-940
3	Switch	1-48-770
4	Circuit Breaker	23-67-163
5	Switch	23-67-160
6	Bracket	Not Serviced
7	Radio (Service Vendor)	
8	Connector	1-48-280
9	Tube	1-48-151
10	Bezel and Louver	1-48-237
11	Pad	23-84-3
12	Name Plate	23-33-96
13	Moulding	23-22-145
14	Panel	23-33-109
15	Catch	23-06-15
16	Box	23-06-4
17	Moulding	23-33-86
18	Light	1-19-1
19	Hinge	23-06-21
20	Plate (Service Vendor)	
21	Nut (Service Vendor)	
22	Knob (Service Vendor)	
23	Knob (Service Vendor)	
24	Bumper	23-06-14
25	Stop	23-06-13
26	Door	23-06-10
27	Latch	23-06-28
28	Nut	23-67-161
29	Knob	23-67-194
30	Plate	23-33-220
31	Housing	23-02-19
32	Grille	23-33-42
33	Shell (Serviced in 8-20-10)	
34	Element	8-20-9
35	Knob	8-20-8
36	Receiver	23-02-18
37	Buttons	1-48-12
38	Pad	1-48-26
39	Knob	1-48-942
40	Retainer	8-53-312
41	Knob	8-53-296
42	Knob	4-10-23
43	Gasket	23-33-227
44	Buttons	21-30-336
45	Bezel	8-37-90
46	Terminal	8-16-1
47	Housing	8-37-178
48	Cylinder and Keys	8-35-115
49	Bezel	8-35-85
50	Knob	1-48-801
51	Decal	1-48-774
52	Bezel	1-48-70
53	Nut	23-54-171
54	Bezel	23-54-170
55	Knob	23-54-169
56	Knob	4-25-3
57	Washer	4-25-5
58	Bezel	23-33-231
59	Nut	23-33-236
60	Rod	4-25-14
61	Arm	4-10-20
62	Lever	4-10-20
63	Spring	4-10-3
64	Cable	4-10-1
65	Grommet	4-10-28
66	Cable	21-30-365
67	Housing	21-30-320
68	Bracket	23-33-213
69	Grommet	23-33-240
70	Bracket	21-30-329
71	Switch	8-56-2
72	Switch	8-53-270
73	Clip	8-50-191
74	Flasher	8-50-186
75	Switch	23-54-167
76	Switch	1-48-770
77	Switch	8-35-59
78	Clamp (Serviced in 8-20-10)	
79	Fuse	8-17-2
80	Block	8-15-3

MyMopar.com

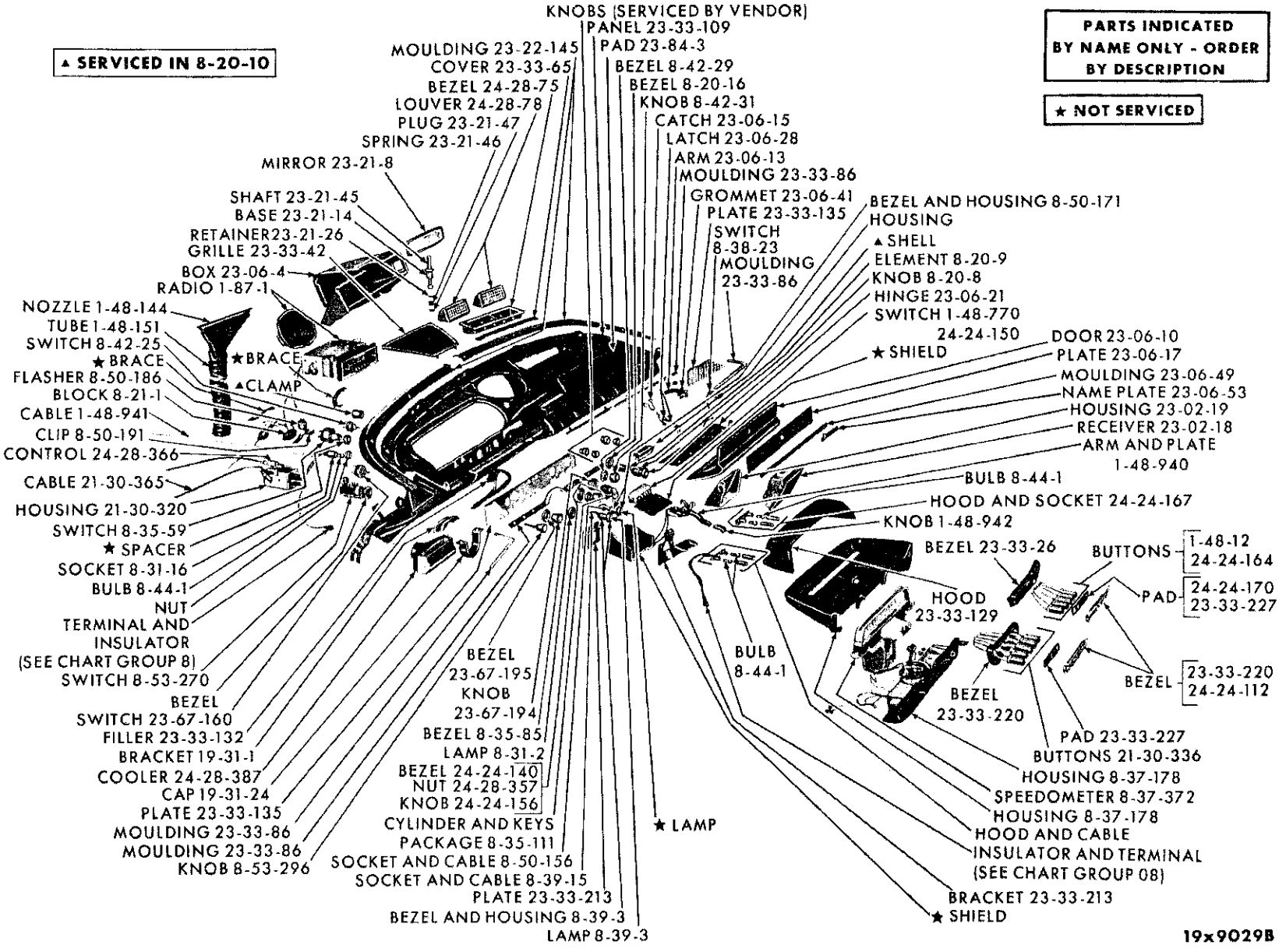

INSTRUMENT PANEL - DODGE SD3

MyMopar.com

CODE	PART NAME AND DESCRIPTION	CYL.	PER CAR	VALIANT LANCER	PLYMOUTH DODGE	CHRYSLER IMPERIAL

NOTES

★ Indicates use as required.
⊟ Indicates parts not listed in any previous parts book.

Numerals in parentheses ( ) refer to notes.

Printed in U.S.A.
Prices and specifications subject to change without notice.
May 1, 1962.

MyMopar.com

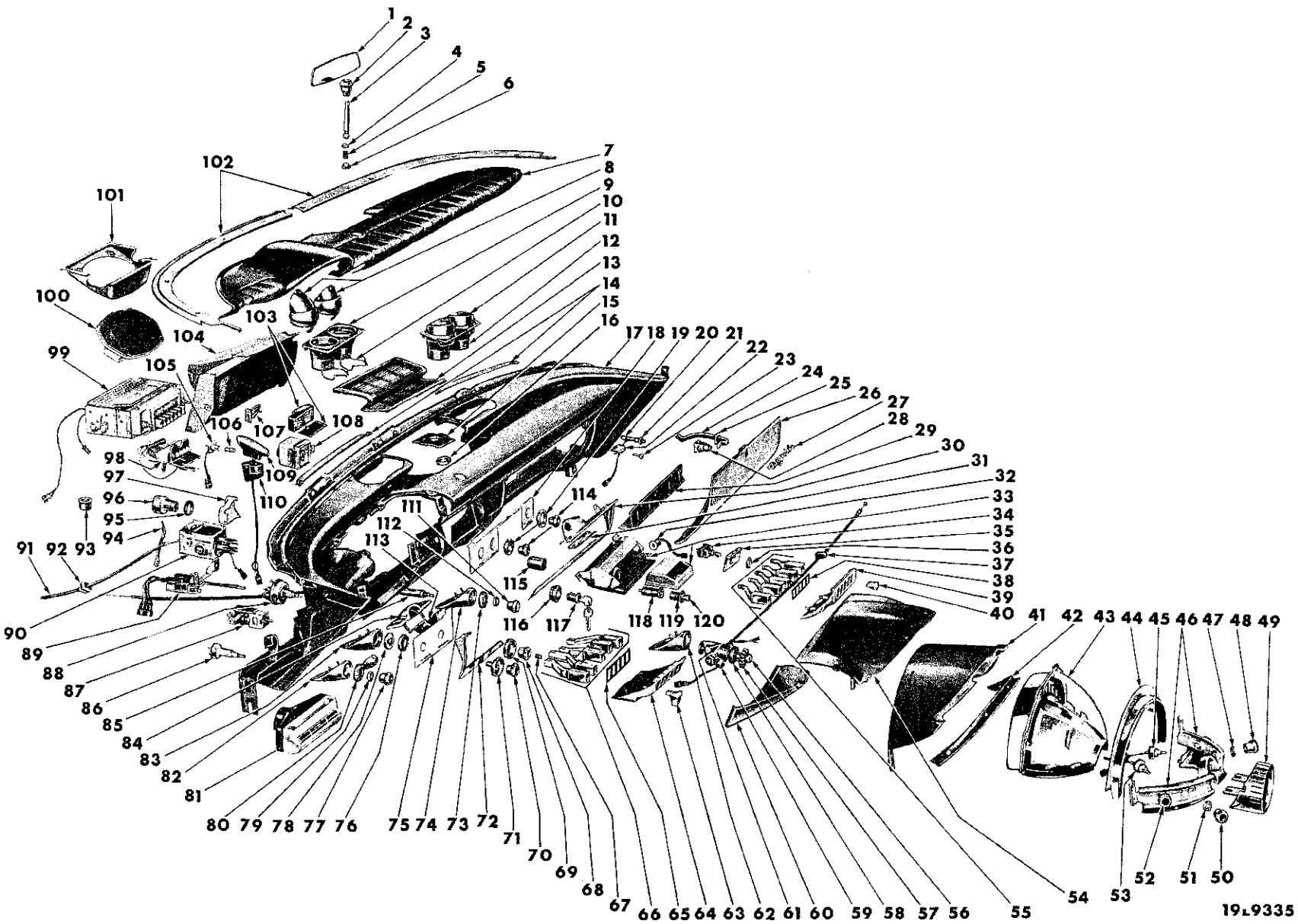

INSTRUMENT PANEL - CHRYSLER SC1-2-3

MyMopar.com

INSTRUMENT PANEL - CHRYSLER SC1-2-3

Ref. No.	Name	Part Type Code
1	Mirror	23-21-8
2	Base	23-21-14
3	Shaft	23-21-45
4	Retainer	23-21-26
5	Spring	23-21-46
6	Plug	23-21-47
7	Pad (order by serial number)	
8	Louver	24-28-78
9	Bezel	24-28-75
10	Retainer	24-01-33
11	Louver	24-28-78
12	Bezel	24-28-75
13	Grille	23-33-42
14	Cover	23-33-65
15	Reinforcement	Not Serviced
16	Nut	23-21-14
17	Panel	23-33-109
18	Plate	23-33-135
19	Bezel	1-87-1
20	Bulb	8-44-1
21	Socket and Switch	Not Serviced
22	Bracket	23-06-16
23	Catch	23-06-15
24	Arm	23-06-13
25	Grommet	23-06-41
26	Door	23-06-10
27	Name Plate	23-06-53
28	Latch	23-06-28
29	Hinge	23-06-21
30	Moulding	23-33-86
31	Lens	8-42-5
32	Housing, w/Cable	Not Serviced
33	Receiver	23-02-18
34	Control	23-13-31
35	Bezel	23-13-35
36	Nut	23-13-36
37	Grommet	14-02-24
38	Pad	1-48-26
39	Bezel	1-48-11
40	Knob	1-48-942
41	Hood	23-33-129
42	Moulding	23-33-36
43	Speedometer	8-37-372
44	Finish Plate and Moulding	23-33-86
45	Switch	8-05-14
46	Moulding	23-33-86
47	Nut	8-05-24
48	Knob	8-05-16
49	Cap	23-33-132
50	Knob	8-42-31
51	Nut	8-42-26
52	Knob	1-48-191
53	Switch	8-42-25
54	Hood	23-33-129
55	Button	1-48-12
56	Button	14-02-3
57	Knob	14-02-4
58	Dial	14-02-30
59	Lamp	14-02-29
60	Cover	23-33-132
61	Control	14-02-2
62	Housing	14-02-11
63	Knob	8-50-133
64	Housing	23-33-217
65	Pad	23-33-227
66	Buttons	21-30-336
67	Button	1-82-43
68	Knob	23-67-194
69	Bezel	23-67-195
70	Knob	8-53-296
71	Bezel	8-53-294
72	Moulding	23-33-86
73	Bezel	24-24-140
74	Housing	24-24-12
75	Plate	23-33-135
76	Nut	23-21-74
77	Knob	24-24-20
78	Bezel	23-21-66
79	Nut	24-24-8
80	Bezel	24-24-140
81	Spot Cooler	24-28-387
82	Housing	24-24-12
83	Housing	23-21-65
84	Bracket	19-31-1
85	Control	24-28-366
86	Switch	24-24-5
87	Switch	8-53-270
88	Switch	23-67-160
89	Switch	8-50-82
90	Housing	21-30-320
91	Cable	21-30-365
92	Grommet	8-30-1
93	Flasher	8-50-186
94	Brace	23-33-10
95	Gasket	8-40-8
96	Switch	8-35-59
97	Housing	Not Serviced
98	Control (Service Component Parts)	
99	Radio	1-87-1
100	Speaker	1-87-1
101	Adapter	Not Serviced
102	Moulding	23-22-145
103	Fuse Holder	8-17-23
104	Box	23-06-4
105	Socket, Bracket and Cable	1-48-886
106	Bulb	8-44-1
107	Clip	Not Serviced
108	Clock	1-21-1
109	Scanner	1-04-4
110	Base	1-04-6
111	Knob	24-28-20
112	Nut	24-24-8
113	Cap	19-31-24
114	Knob	1-87-1
115	Clamp	8-20-10
116	Ring	8-35-85
117	Cylinder and Keys	8-35-115
118	Shell	8-20-10
119	Element	8-20-9
120	Knob	8-20-8

MyMopar.com

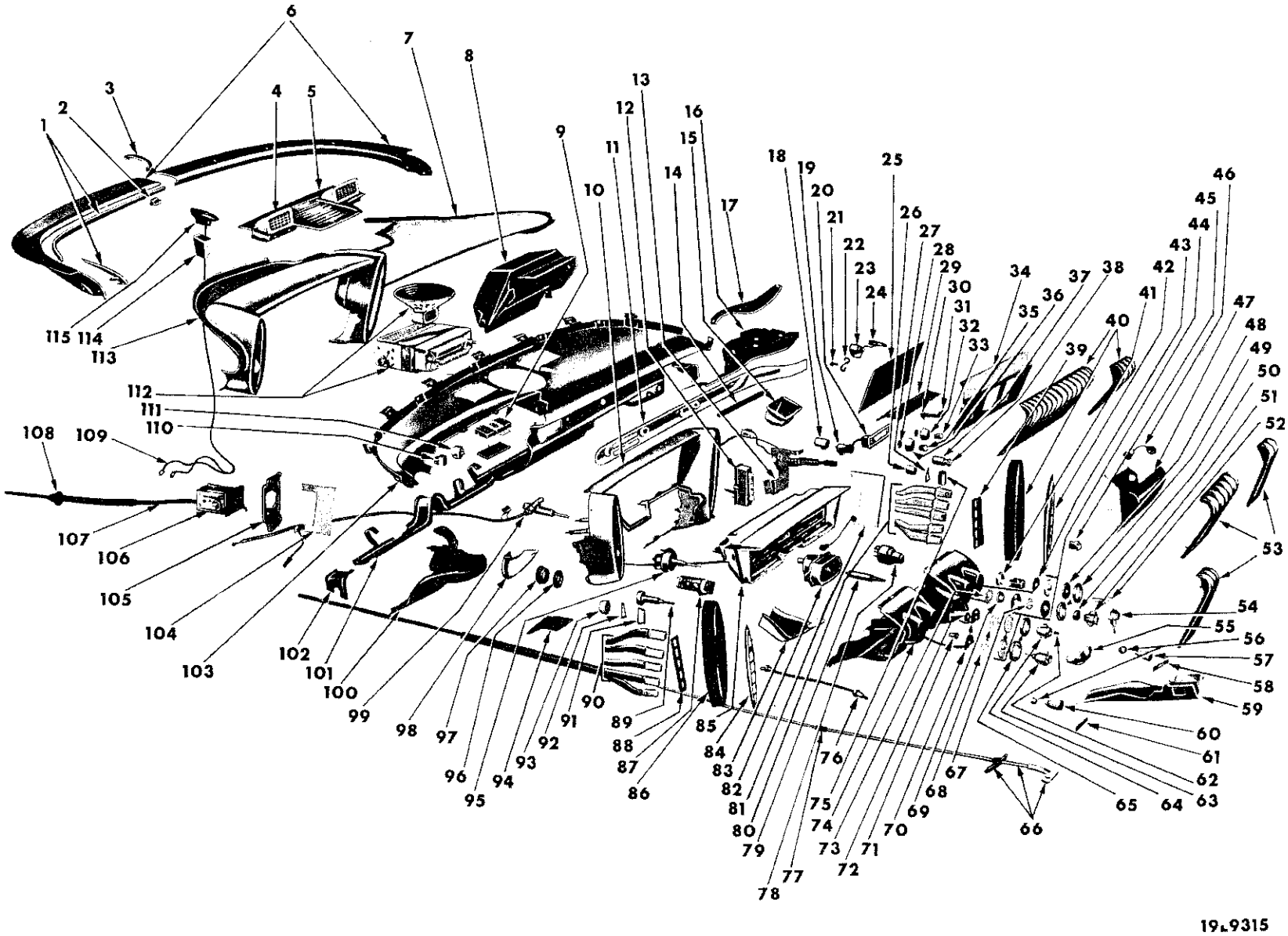

INSTRUMENT PANEL - IMPERIAL SY1

MyMopar.com

INSTRUMENT PANEL - IMPERIAL SY1

Ref. No.	Name	Part Type Code
1	Plate	23-22-145
2	Ornament	23-22-160
3	Cover	23-22-148
4	Louver	24-28-78
5	Grille	23-33-42
6	Moulding	23-22-145
7	Pad (order by serial number)	
8	Box	23-06-4
9	Circuit Breaker	8-15-3
10	Housing	8-37-178
11	Plate	23-33-135
12	Switch	1-48-770
13	Arm and Bracket (Serviced in 1-48-4)	
14	Plate	23-33-96
15	Receiver	23-06-18
16	Extension	23-33-109
17	Cover	23-33-147
18	Clamp (Serviced in 8-20-10)	
19	Shell (Serviced in 8-20-10)	
20	Switch	8-42-25
21	Catch	23-06-15
22	Bracket	23-06-16
23	Latch	23-06-28
24	Bumper	23-06-14
25	Plate	23-06-12
26	Housing	
27	Gasket	Not Serviced
28	Retainer	8-37-21
29	Hinge	23-06-21
30	Grommet	23-06-41
31	Arm	23-06-13
32	Bezel	8-37-20
33	Knob	1-88-116
34	Door	23-06-10
35	Knob	8-42-31
36	Bezel	8-37-20
37	Element	8-20-9
38	Knob	8-20-8
39	Spacer	Not Serviced
40	Pad (order by serial number)	
41	Ring	8-35-85
42	Bezel	1-48-70
43	Lamp	8-37-15
44	Retainer	8-37-21
45	Knob	1-48-942
46	Housing	8-19-83
47	Door and Housing	23-02-40
48	Lens	
49	Bezel	8-37-20
50	Collar	14-02-8
51	Knob	14-02-4
52	Cylinder and Key	8-35-115
53	Pad (order by serial number)	
54	Button	14-02-3
55	Clamp	19-14-35
56	Bezel	24-24-140
57	Knob	24-24-156
58	Plate	
59	Cap	19-31-24
60	Knob	24-24-20
61	Plate	24-24-13
62	Button	1-82-43
63	Knob	8-53-296
64	Knob	23-67-194
65	Bezel	8-37-20
66	Control	15-14-1
67	Dial	14-02-30
68	Lens	
69	Nut	
70	Lamp	8-37-15
71	Knob	1-21-1
72	Nut	
73	Lamp	14-02-29
74	Housing	8-37-178
75	Lens	
76	Cable	21-84-1
77	Grommet	15-14-20
78	Switch	8-35-59
79	Control	24-28-366
80	Buttons	24-24-164
81	Lamp and Cable	24-24-167
82	Clock (Serviced by Vendor)	
83	Brace	19-31-7
84	Bezel	23-33-220
85	Cluster	8-37-371
86	Pad (order by serial number)	
87	Switch	8-53-270
88	Pad	23-33-227
89	Switch	24-24-5
90	Buttons	21-30-336
91	Lens	
92	Gasket	Not Serviced
93	Housing	
94	Bracket	4-25-2
95	Switch	23-67-160
96	Nut	23-21-74
97	Bezel	23-21-66
98	Plate	23-33-135
99	Control	14-02-2
100	Extension	23-33-109
101	Reinforcement	23-07-168
102	Bracket	23-07-169
103	Panel	23-33-109
104	Cable and Socket	21-30-28
105	Bracket	23-33-213
106	Housing	21-30-320
107	Cable	21-30-365
108	Grommet	8-30-1
109	Wiring (Serviced in 1-04-1)	
110	Circuit Breaker	23-67-163
111	Flasher	8-50-186
112	Radio	1-87-1
113	Pad (order by serial number)	
114	Base	1-04-6
115	Scanner	1-04-4

PARTS INDICATED BY NAME ONLY - ORDER BY DESCRIPTION

MyMopar.com

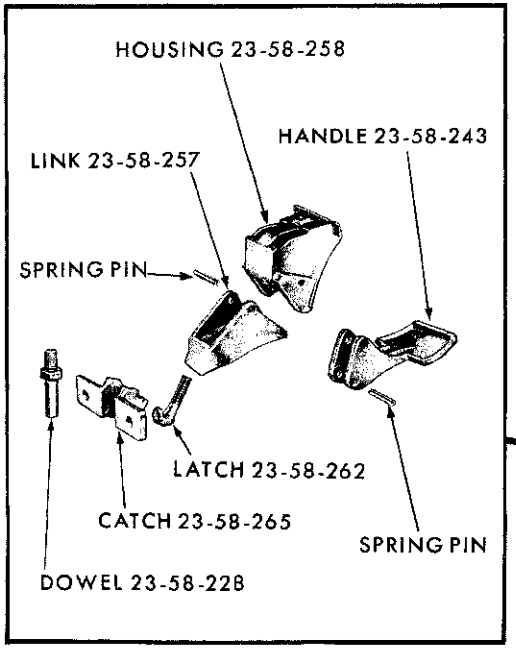

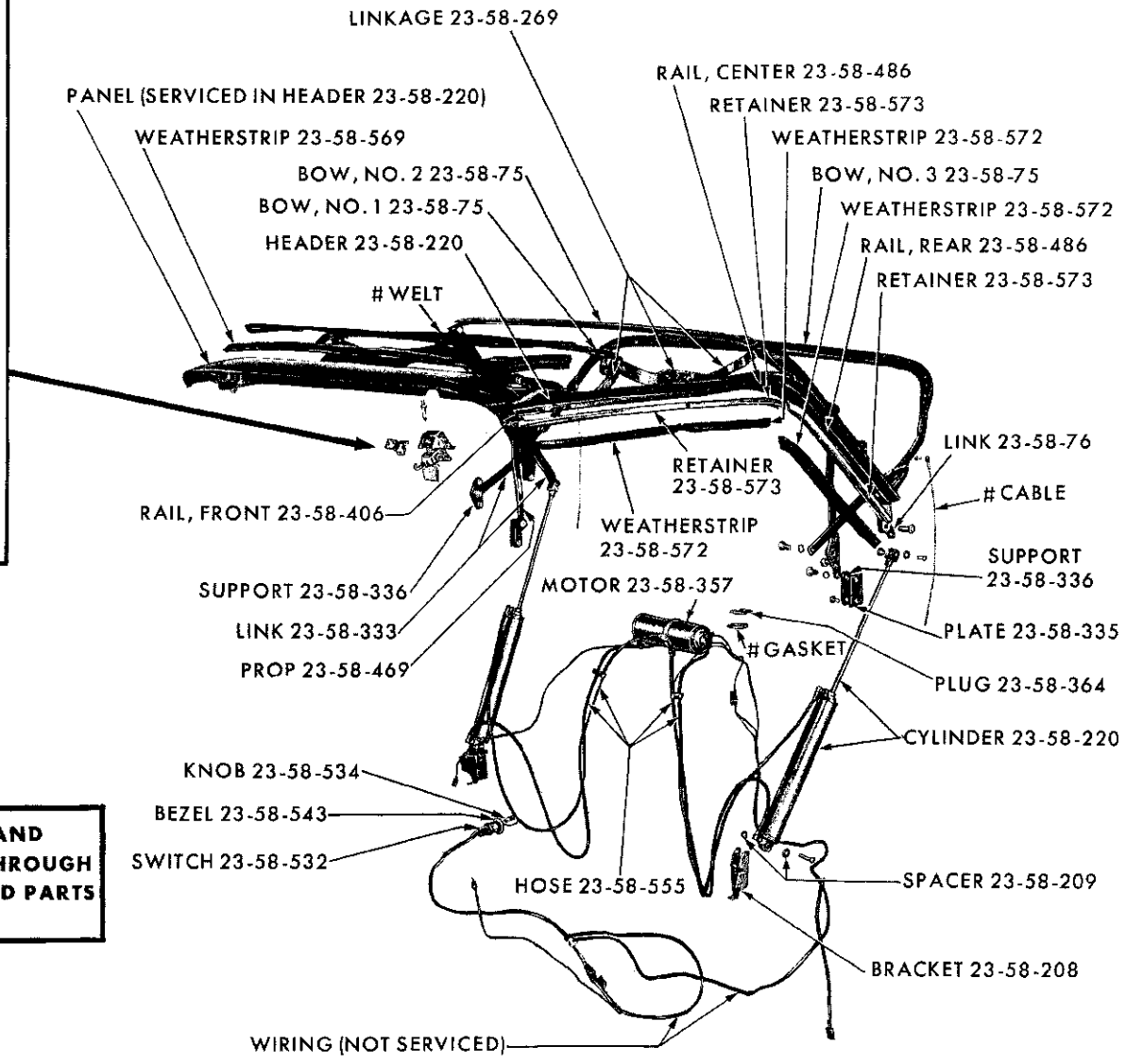

NOTE FOR, BOLTS, SCREWS, WASHERS AND PINS SEE PART TYPE CODES 23-58-601 THROUGH 23-58-607. NUTS AND OTHER STANDARD PARTS SHOULD BE ORDERED BY DESCRIPTION.

 # ORDER BY SERIAL NUMBER

19x9362

FOLDING TOP - PLYMOUTH SP1-2 AND DODGE SD1-2

MyMopar.com

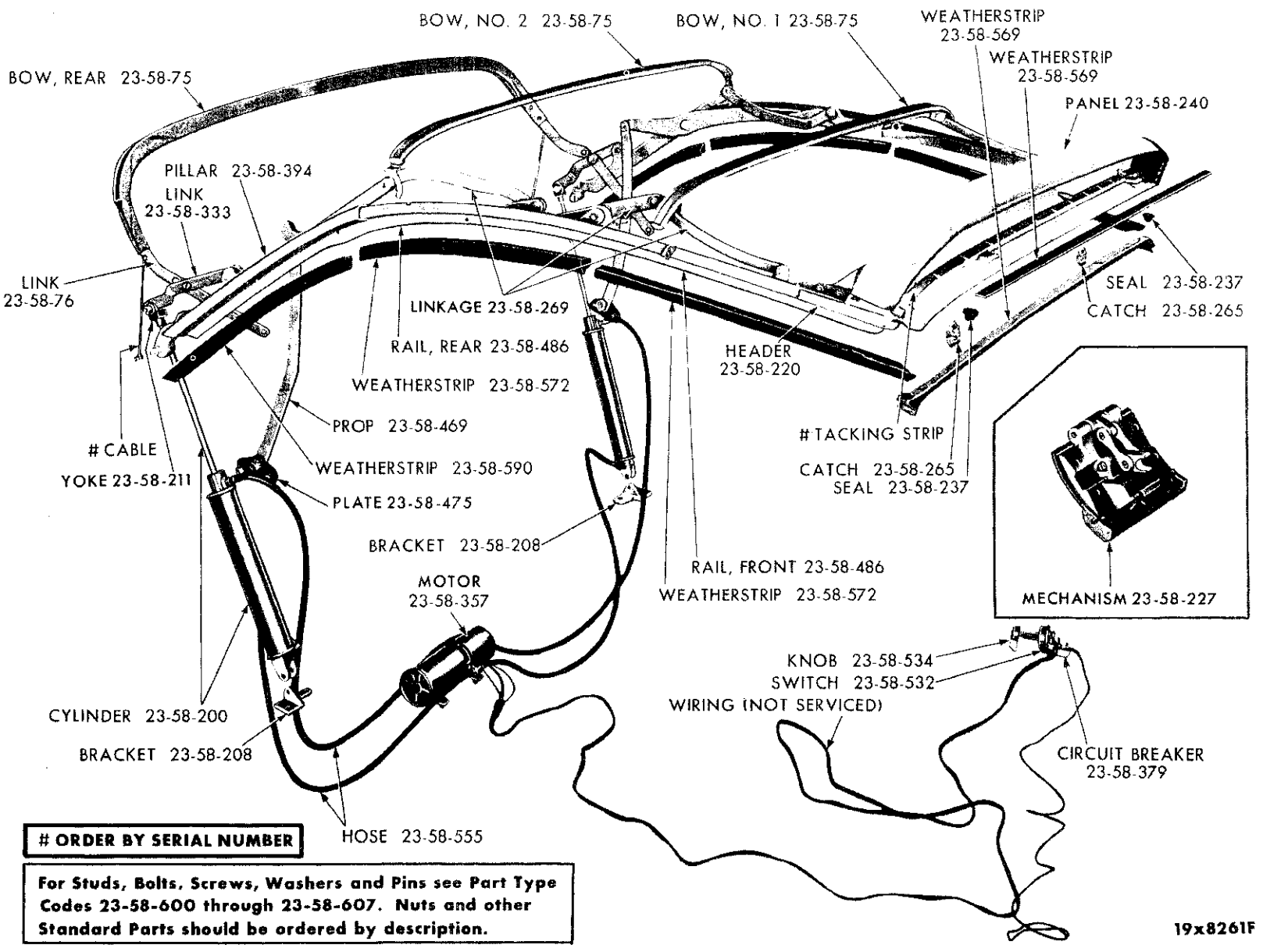

 # ORDER BY SERIAL NUMBER

For Studs, Bolts, Screws, Washers and Pins see Part Type Codes 23-58-600 through 23-58-607. Nuts and other Standard Parts should be ordered by description.

CONVERTIBLE COUPE FOLDING TOP - CHRYSLER SC1-2

MyMopar.com

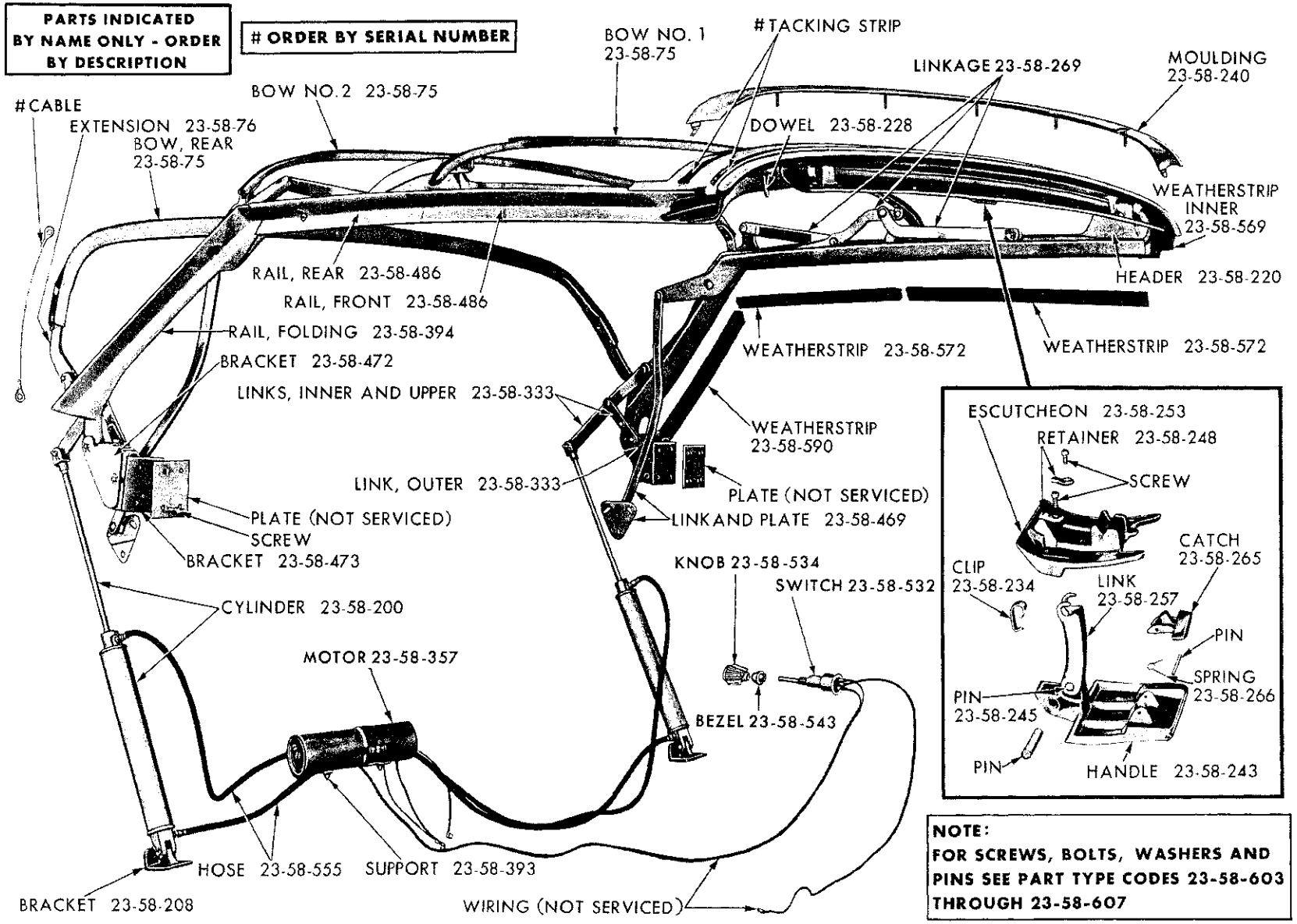

CONVERTIBLE COUPE FOLDING TOP - IMPERIAL SY1

MyMopar.com

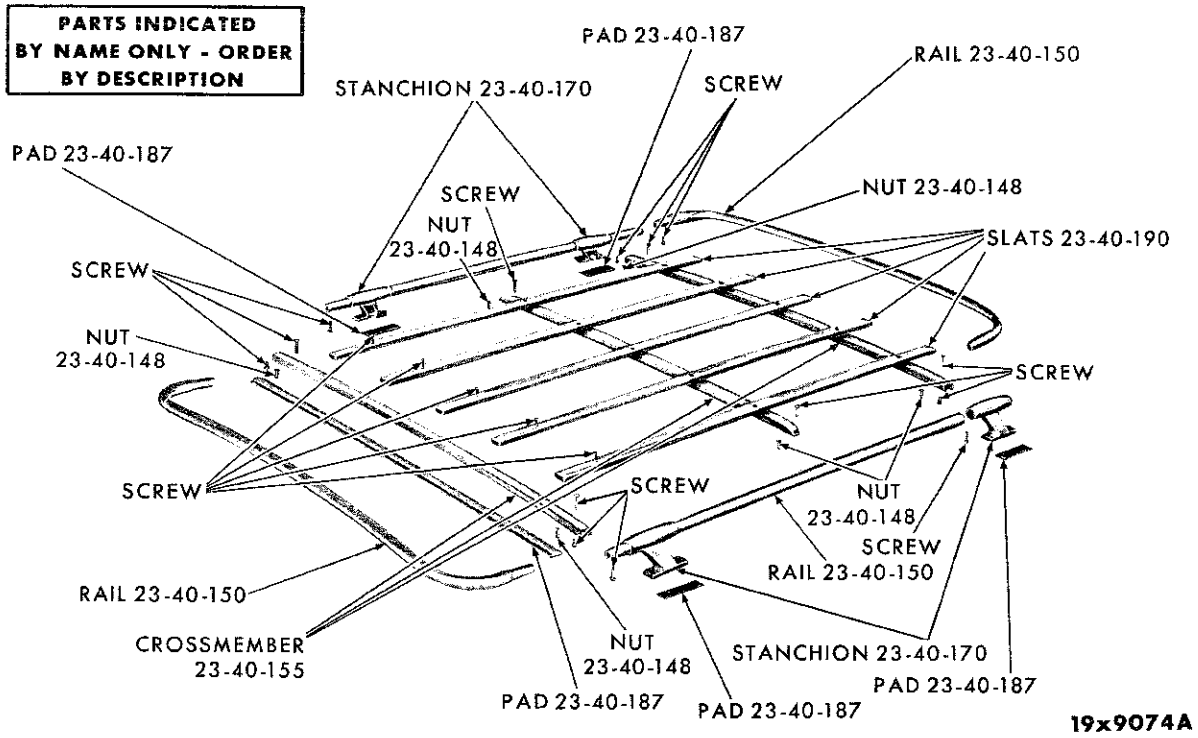

ROOF LUGGAGE RACK - EXCEPT CHRYSLER SC1-2-3 AND IMPERIAL SY1

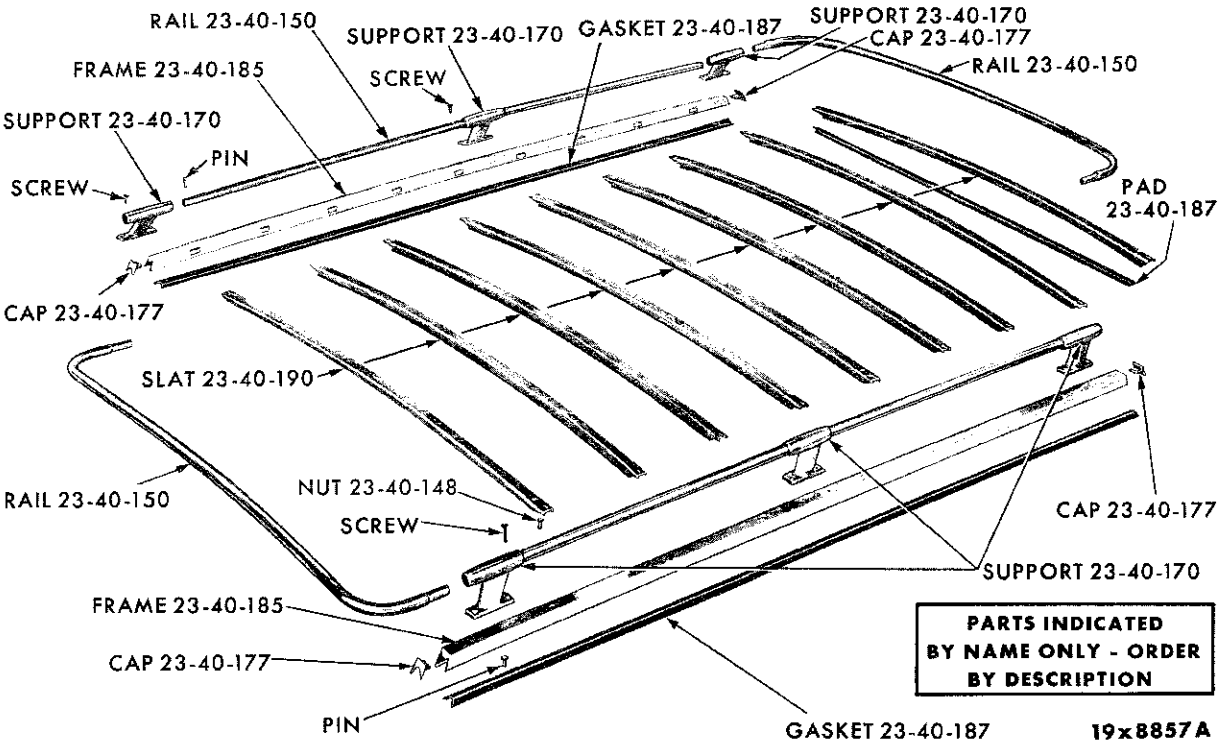

ROOF LUGGAGE RACK - CHRYSLER SC1-2-3

MyMopar.com

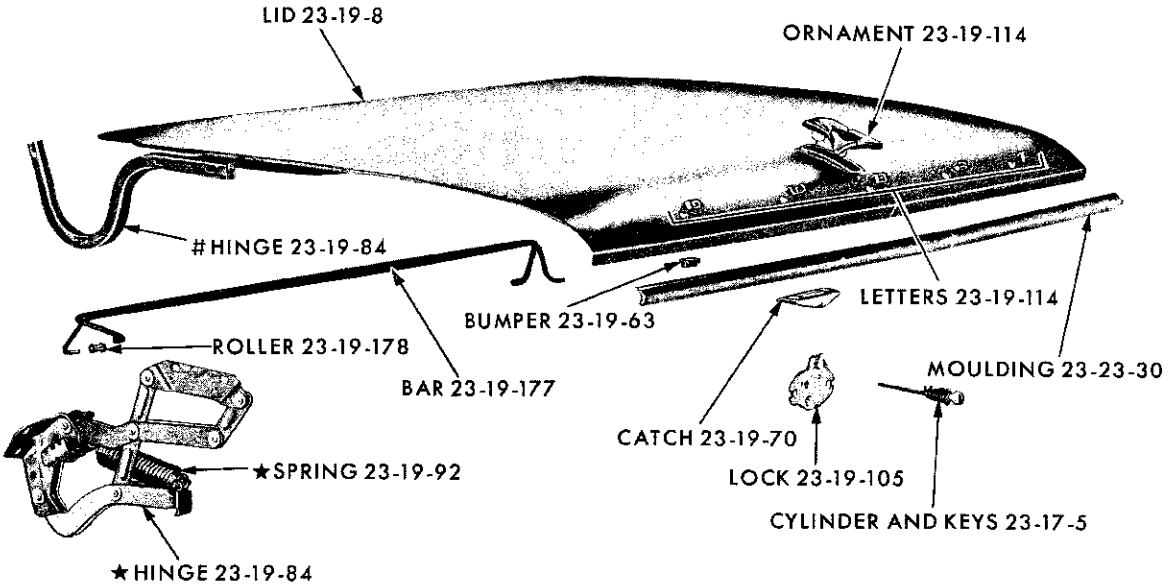

★ CONVERTIBLE COUPE
EXCEPT CONVERTIBLE COUPE

19x9407

DECK LID - EXCEPT CHRYSLER SC1-2-3 AND IMPERIAL SY1

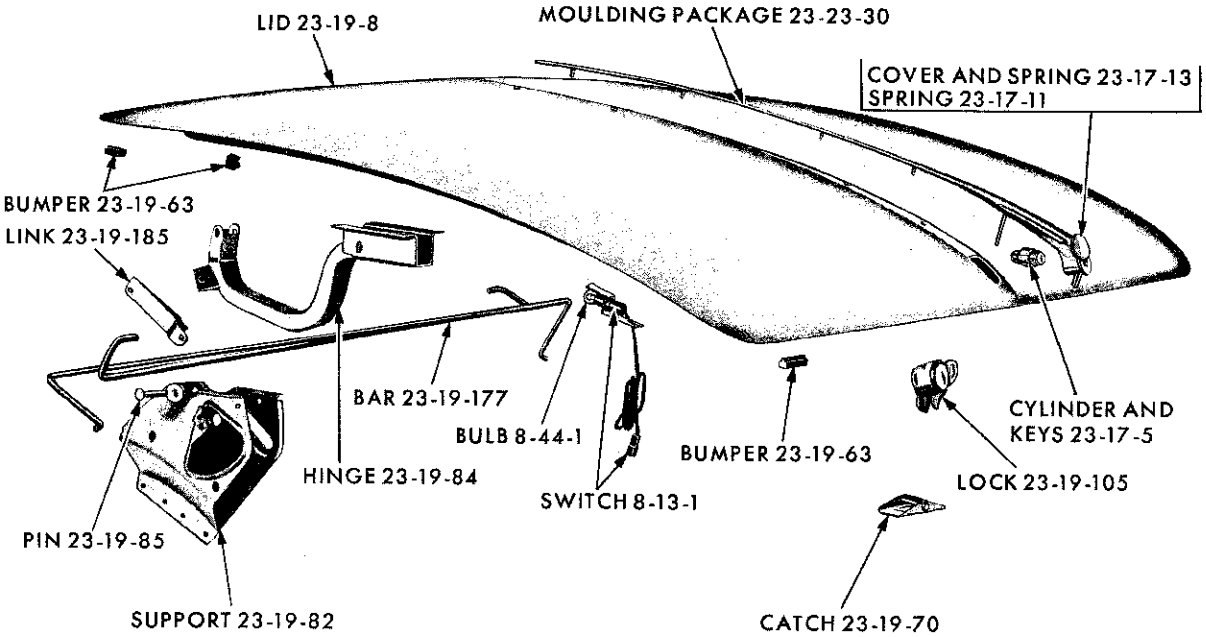

19x9378

DECK LID AND HINGES - IMPERIAL SY1

MyMopar.com

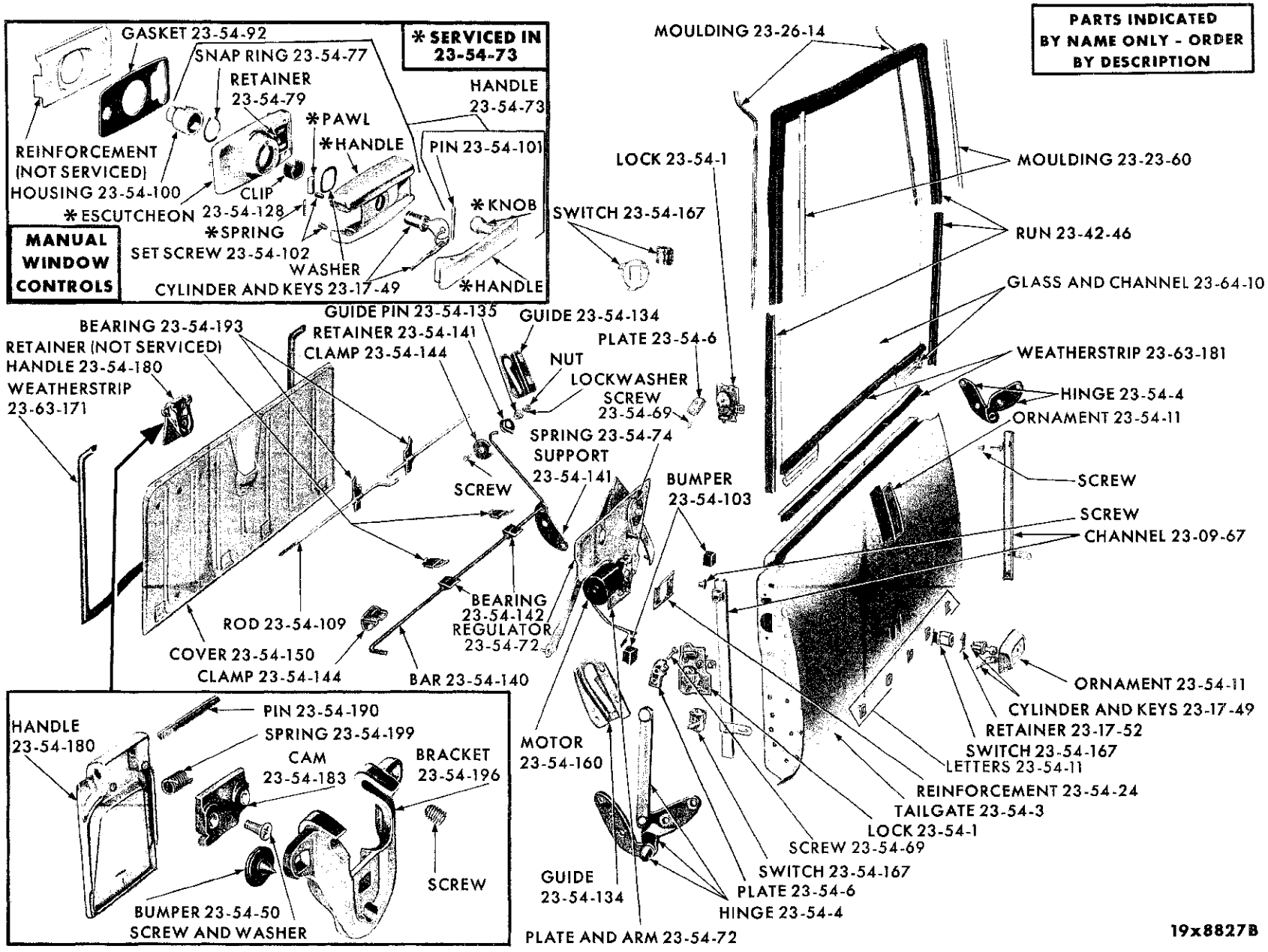

TAILGATE - VALIANT SV1 AND LANCER SL1

MyMopar.com

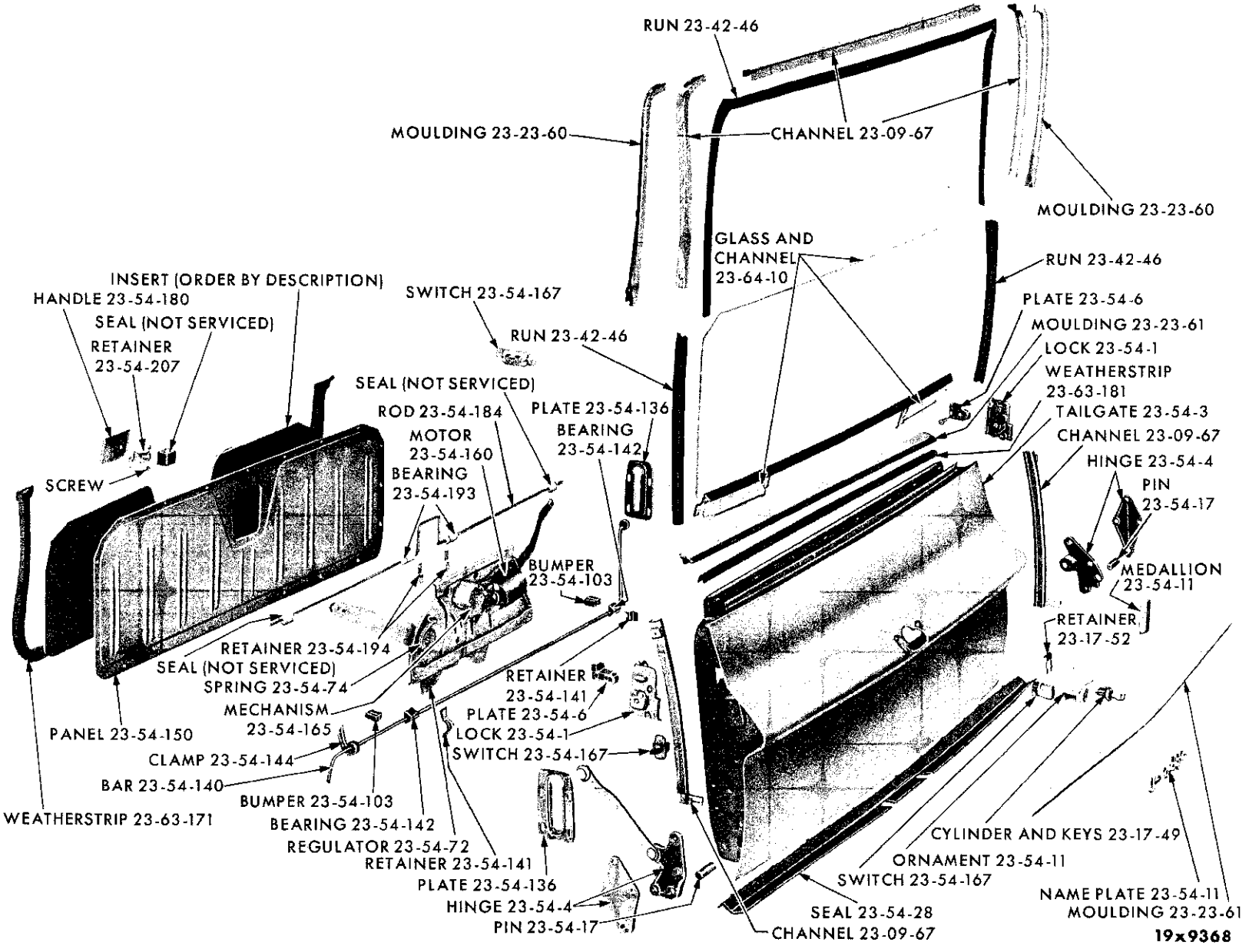

TAILGATE - PLYMOUTH SP1-2 AND DODGE SD1-2

MyMopar.com

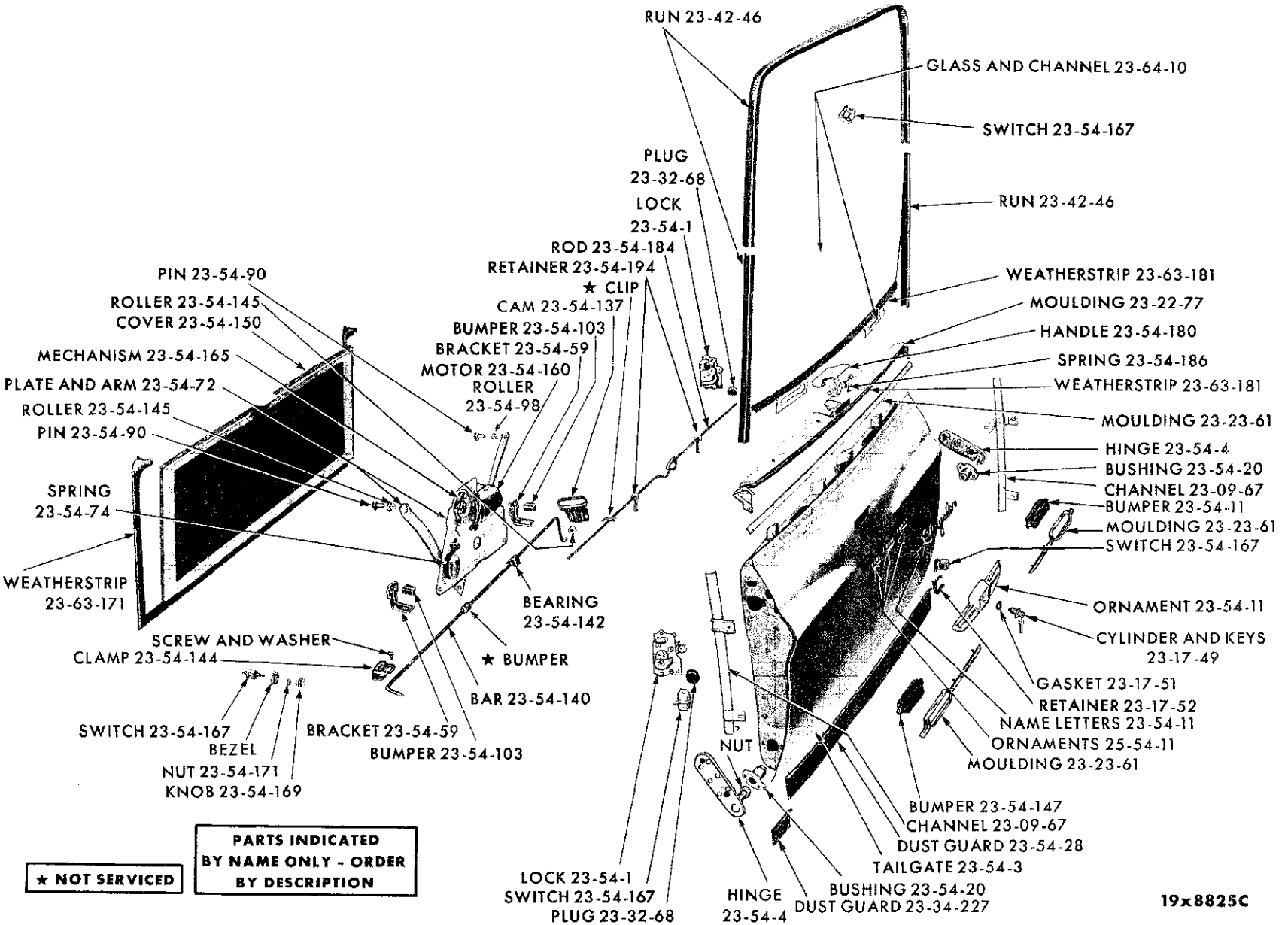

TAILGATE - CHRYSLER SC1-2-3

MyMopar.com

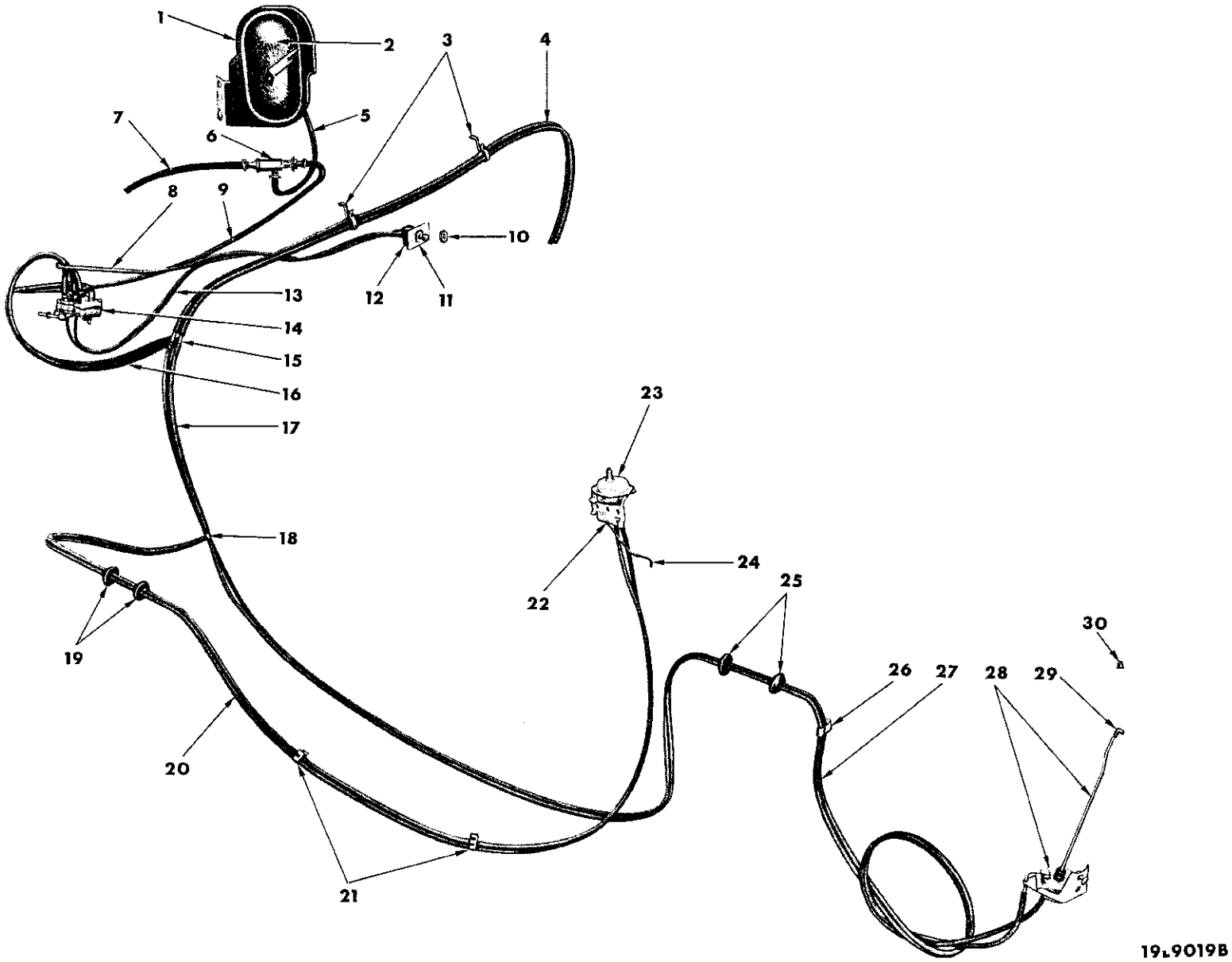

VACUUM DOOR LOCK SYSTEM

MyMopar.com

VACUUM DOOR LOCK SYSTEM

Ref. No.	Name	Part No.	Part Type Code
1	Connector, Tank Hose	2258 043	23-13-52
2	Tank, w/Bracket C3	2198 540	23-13-45
	C1, C2	2198 539	23-23-45
	Washer	2- 138 489	
	Nut	2- 120 377	
3	Clip	Not Serviced	
4	Tube, Floor Pan (Twin)	1964 204	23-13-10
5	Tube, Check Valve to Tank	2216 231	23-13-10
6	Valve, Tank Check, w/Hose	2258 044	23-13-47
7	Tube, Check Valve to Manifold	4′ of 2254 553	23-13-10
8	Tube, Instrument Panel Control to Valve (Single)	1964 641	23-13-10
9	Tube, Check Valve to Distributor Valve	1′ of 2254 553	23-13-10
10	Nut, Control and Bezel Mounting	2096 490	23-13-36
11	Bezel, Instrument Panel Control Oblong	2096 489	23-13-35
12	Control, Instrument Panel (or Switch)	2096 487	23-13-31
13	Tube, Instrument Panel Control to Valve (Twin)	1964 685	23-13-10
14	Valve, Distributor	2258 080	23-13-41
15	Tee, Main	2-1964 609	23-13-13
16	Tube, Distributor to Main Tee (Twin)	1964 202	23-13-10
17	Tube, Main Tee to Side Tee (Twin) Right	1964 204	23-13-10
	Left	1964 573	23-13-10
18	Tee, Side	4-1964 610	23-13-13
19	Grommet, Front Door	2-2166 678	23-13-11
20	Tube, Front Door (Twin)	2-1964 203	23-13-10
21	Clamp, Front Door	4-2165 090	23-13-25
22	Clip, Front Door	2-6022 297	23-13-17
23	Unit, Front Door Power	1963 196-7	23-13-6
24	Rod, Front Door Power Unit to Door Lock	2-1963 673	23-13-20
25	Grommet, Rear Door and Center Pillar	4-2166 678	23-13-11
26	Clamp, Rear Door	4-2165 090	23-13-25
27	Tube, Rear Door (Twin)	2-1964 206	23-13-10
28	Unit, Rear Door Power, w/Rod	1964 918-9	23-13-6
29	Clip, Rear Door Rod End to Door Lock	6008 144-5	23-13-17
30	Knob, Rear Door Lock Locking Control	2-1964 394	23-13-37

MyMopar.com

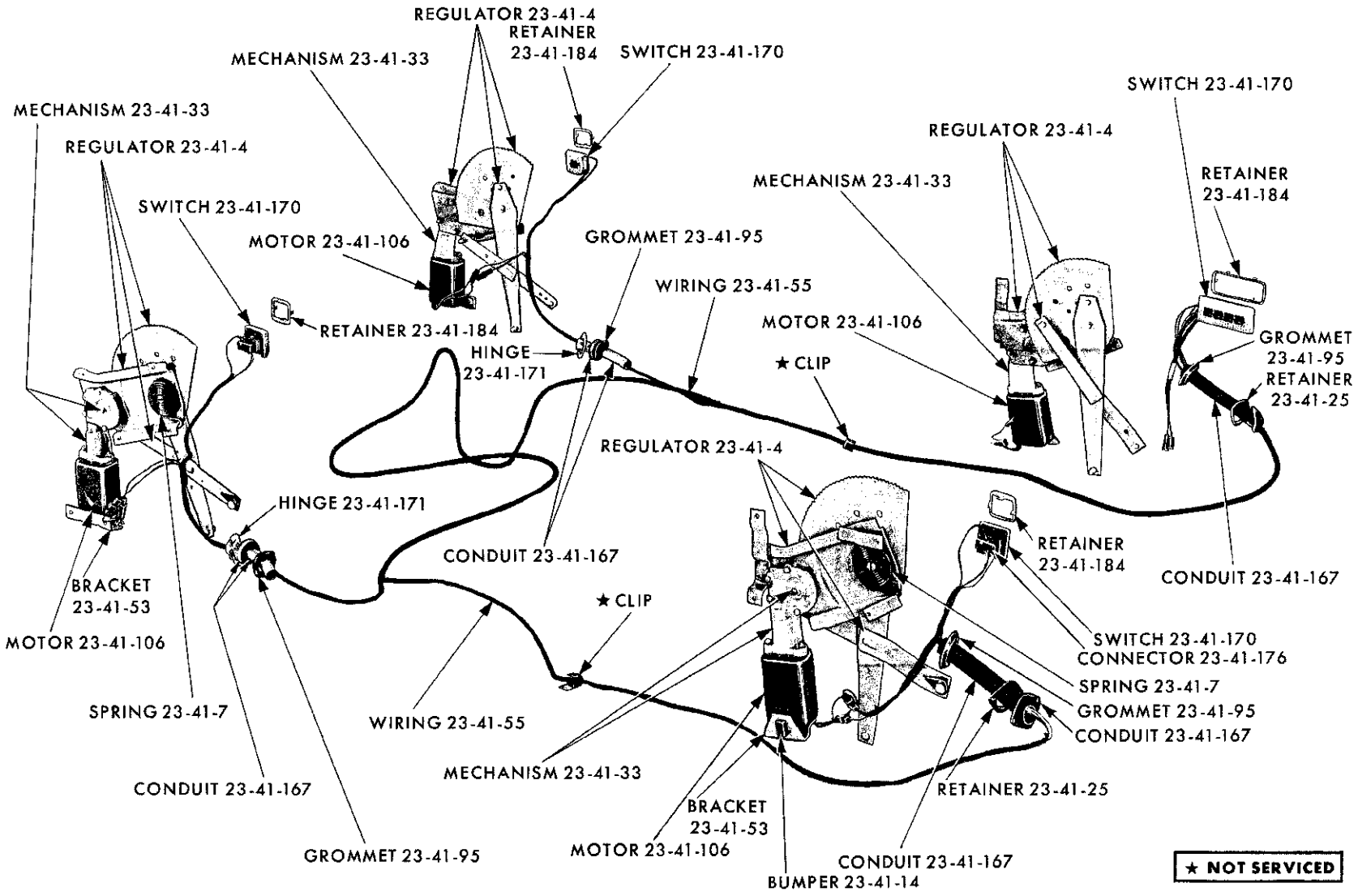

POWER WINDOWS - PLYMOUTH SP1-2 AND DART SD1-2

MyMopar.com

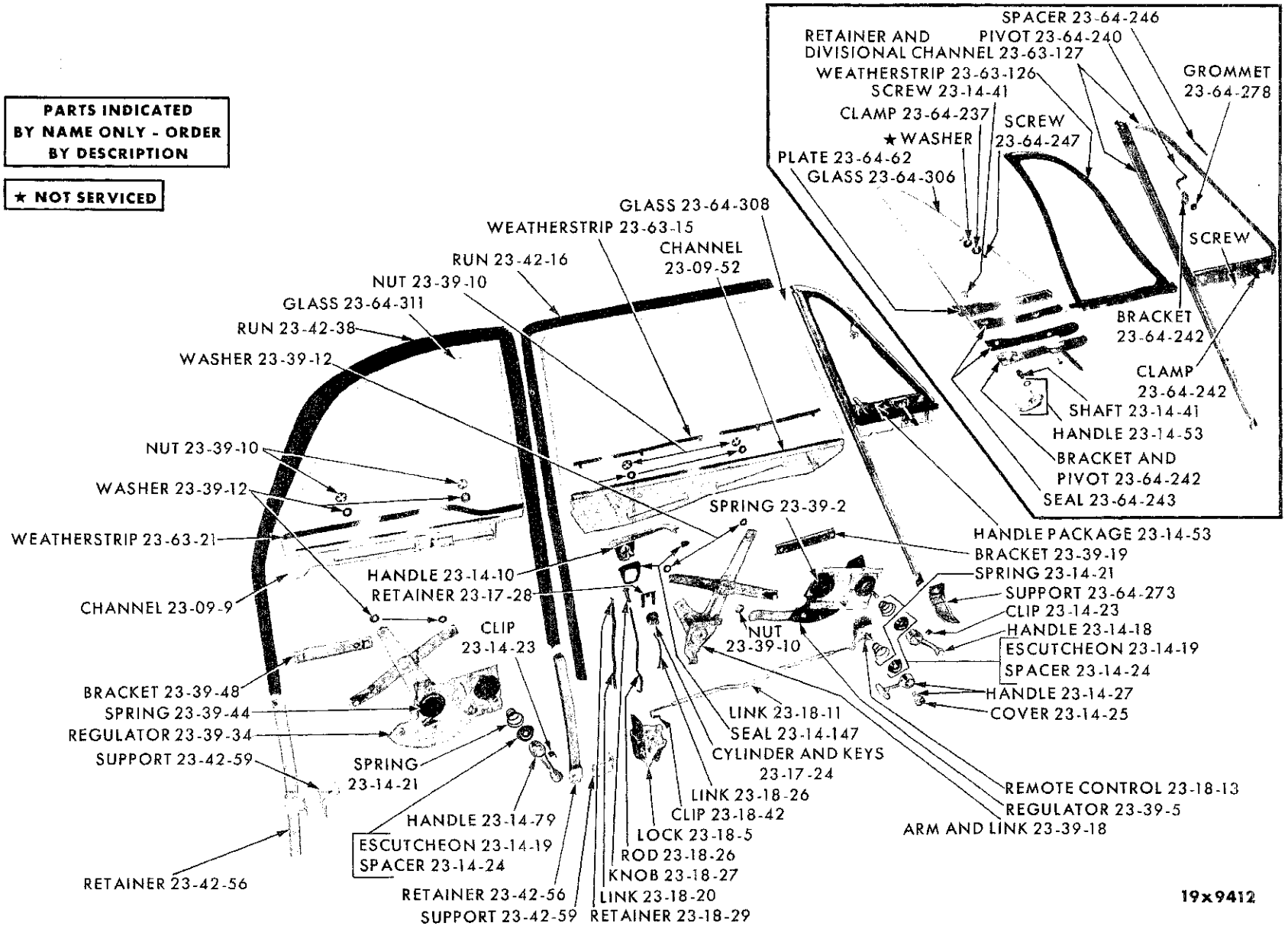

DOOR WINDOW REGULATORS AND RUNS - PLYMOUTH SP1-2 CLUB SEDAN

MyMopar.com

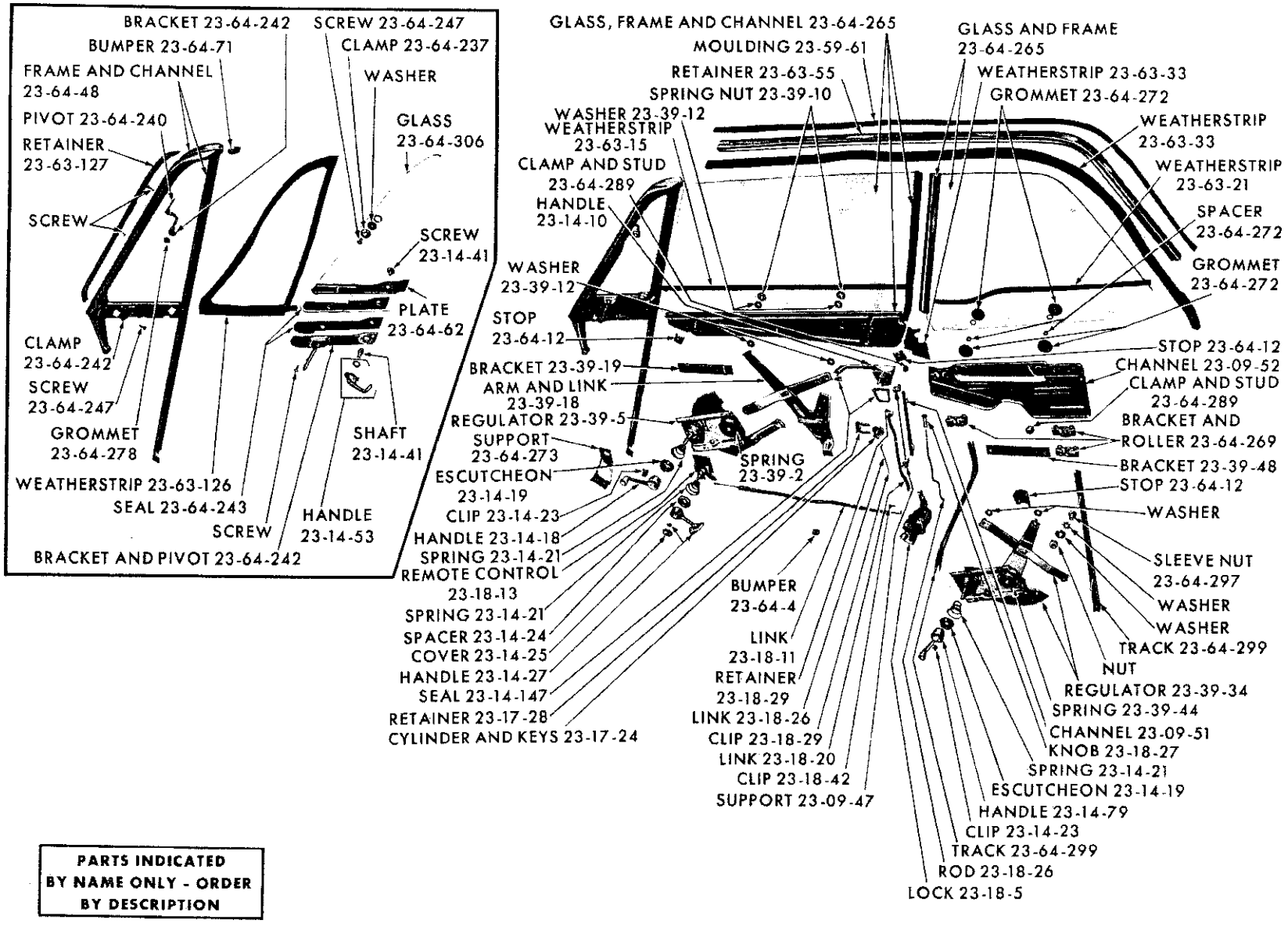

DOOR WINDOW REGULATORS AND RUNS - PLYMOUTH SP1-2 AND DART SD1-2 SPECIAL CLUB COUPE

MyMopar.com

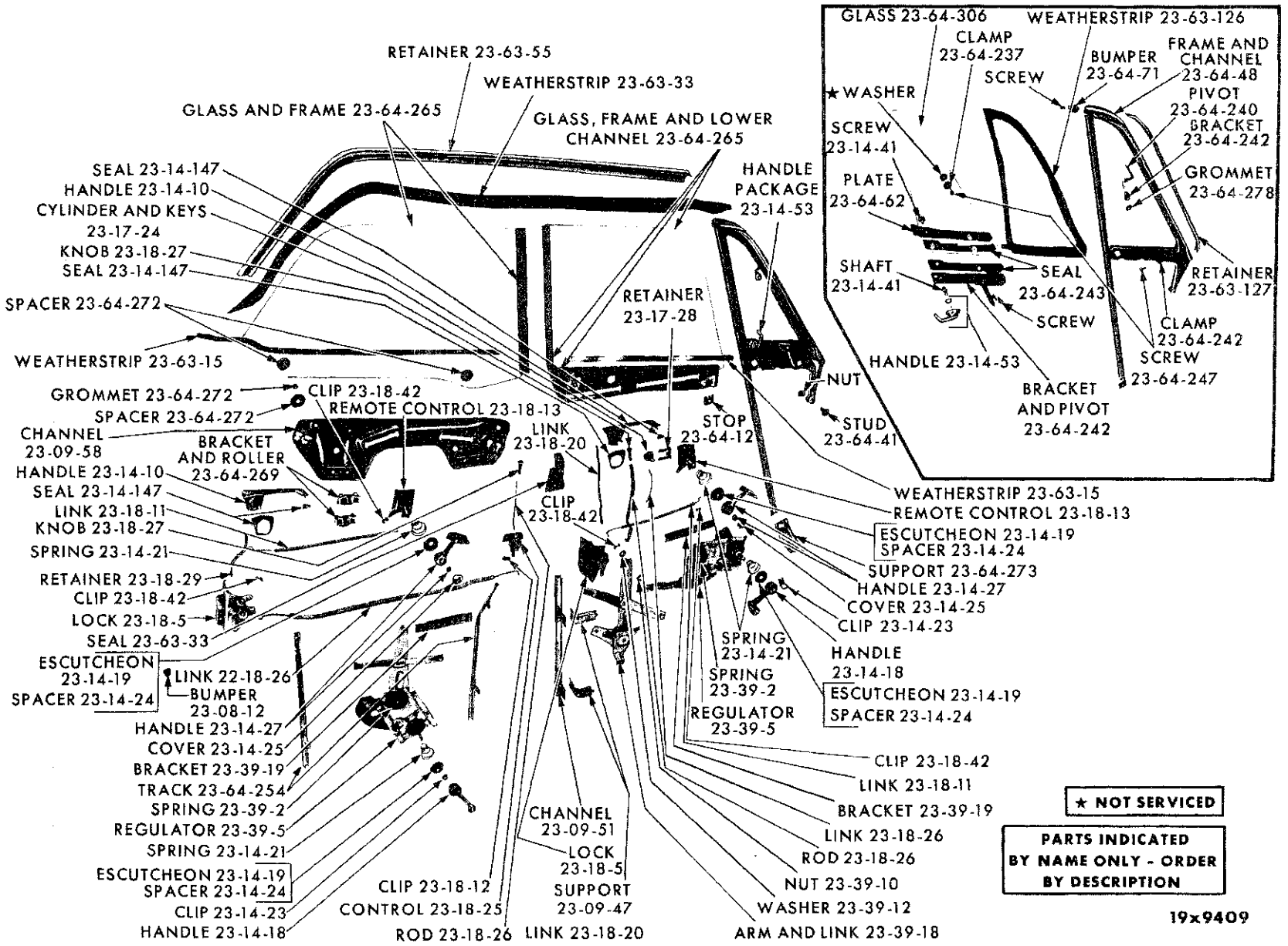

DOOR WINDOW REGULATORS AND RUNS - PLYMOUTH SP1-2 AND DART SD1-2 SPECIAL 4 DOOR SEDAN

MyMopar.com

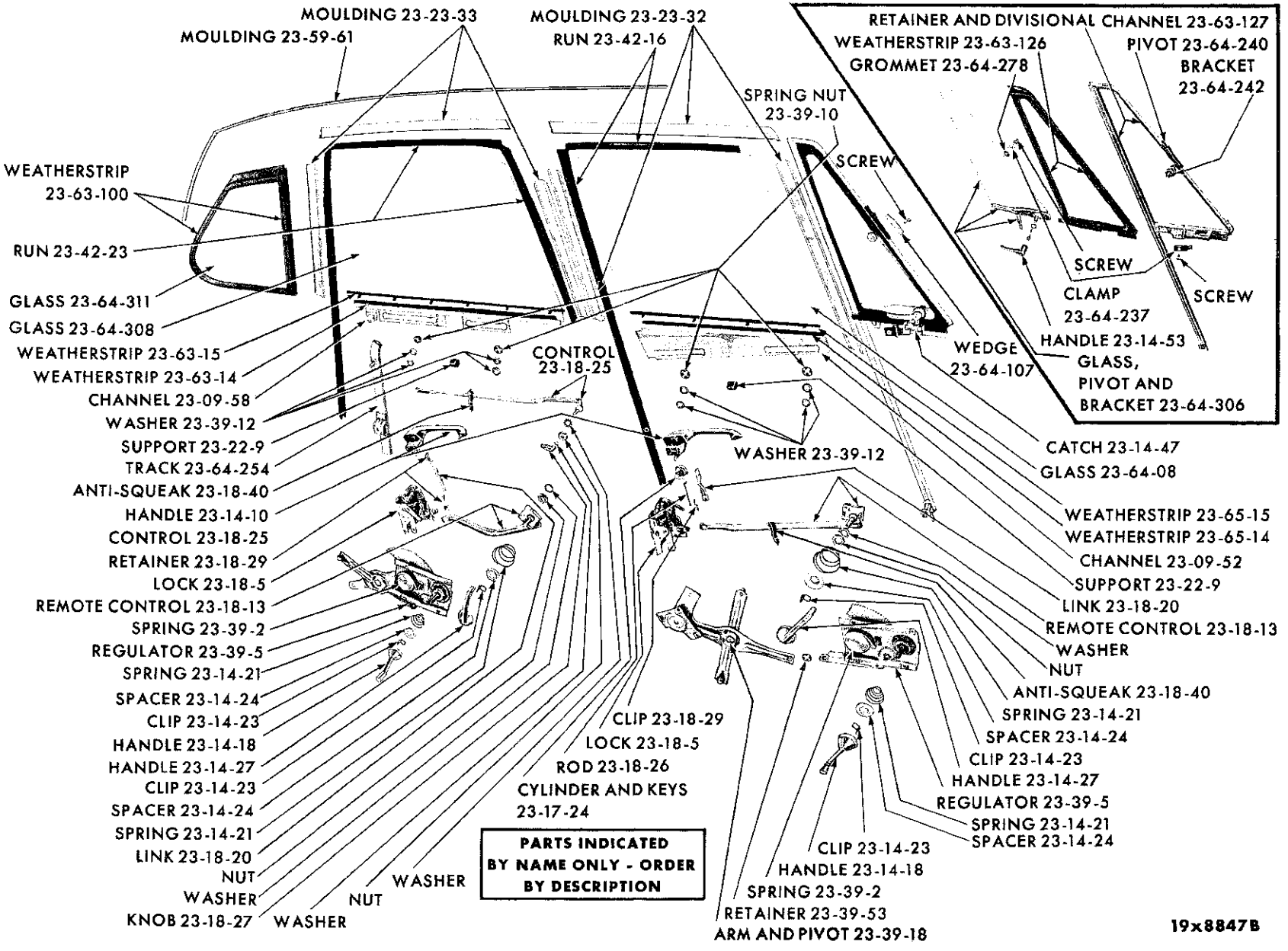

DOOR WINDOW REGULATORS AND RUNS - VALIANT SV1 AND LANCER SL1 4 DOOR SEDAN

MyMopar.com

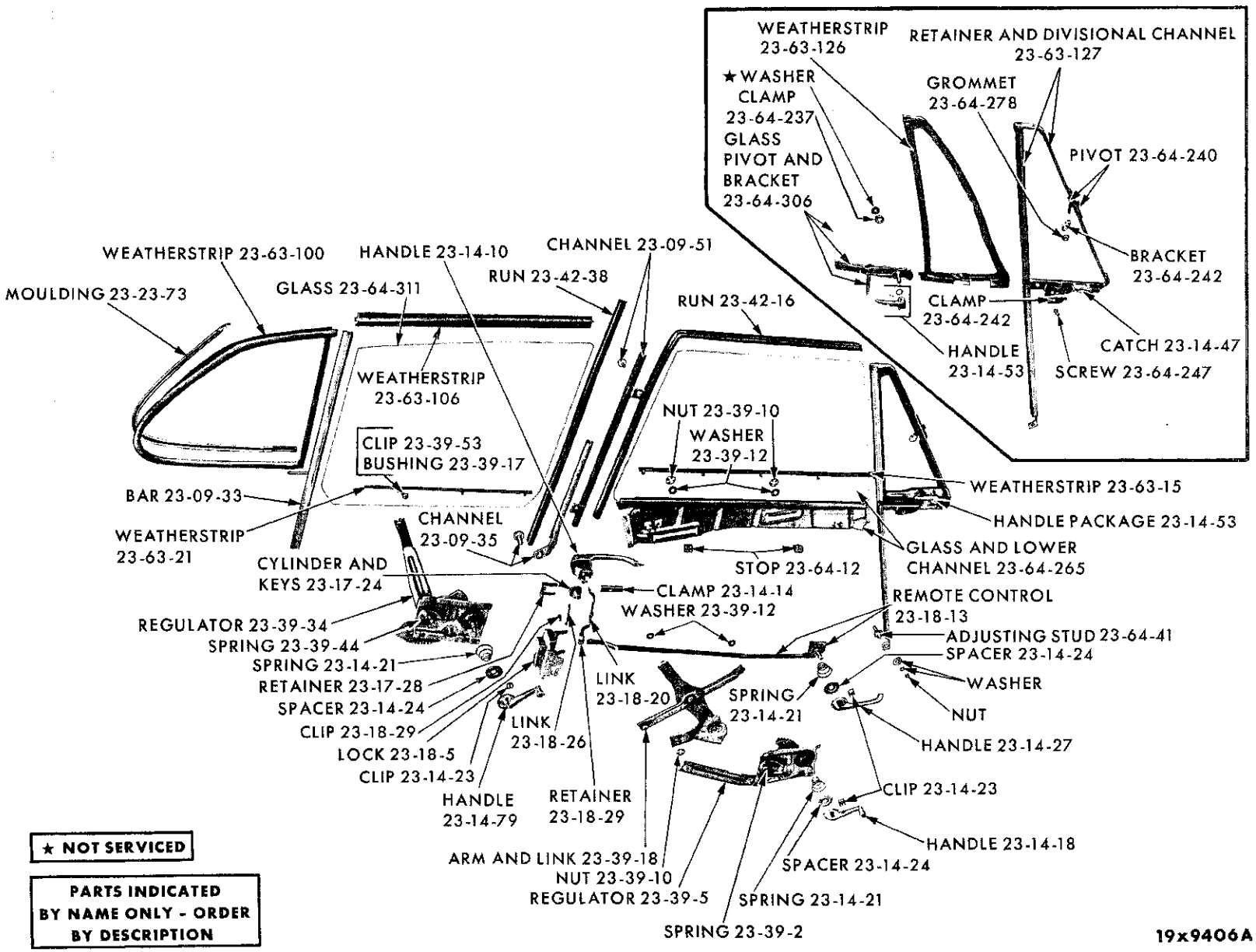

DOOR WINDOW REGULATORS AND RUNS - VALIANT SV1 AND LANCER SL1 CLUB SEDAN

MyMopar.com

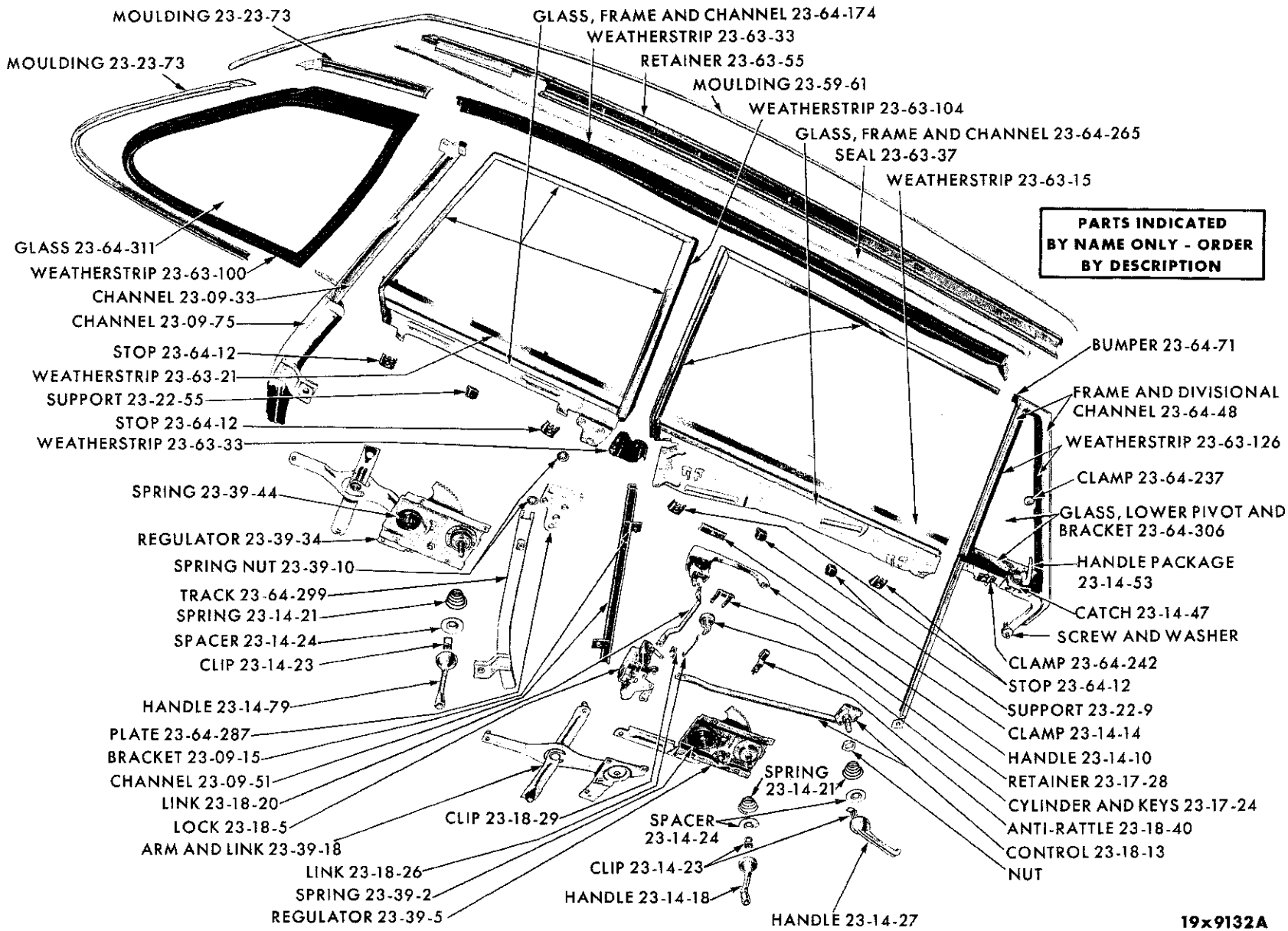

DOOR WINDOW REGULATORS AND RUNS - VALIANT SV1 AND LANCER SL1 SPECIAL CLUB COUPE

MyMopar.com

CODE	PART NAME AND DESCRIPTION	CYL.	PER CAR	VALIANT LANCER	PLYMOUTH DODGE	CHRYSLER IMPERIAL

NOTES

★ Indicates use as required.
⊟ Indicates parts not listed in any previous parts book.

Printed in U.S.A.
Prices and specifications subject to change without notice.
May 1, 1962.

MyMopar.com

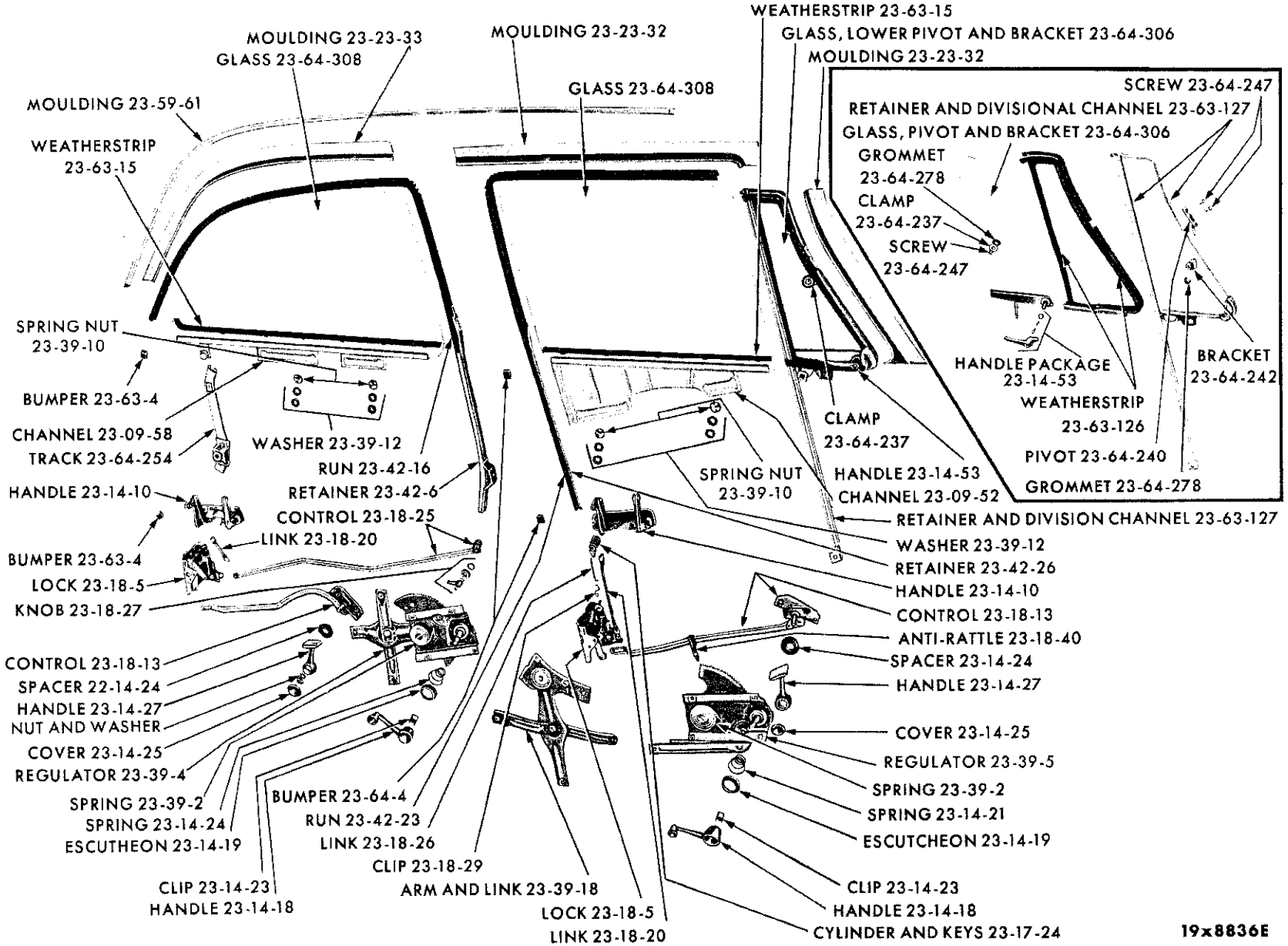

DOOR WINDOW REGULATORS AND RUNS - CHRYSLER SC1-3 4 DOOR SEDAN

MyMopar.com

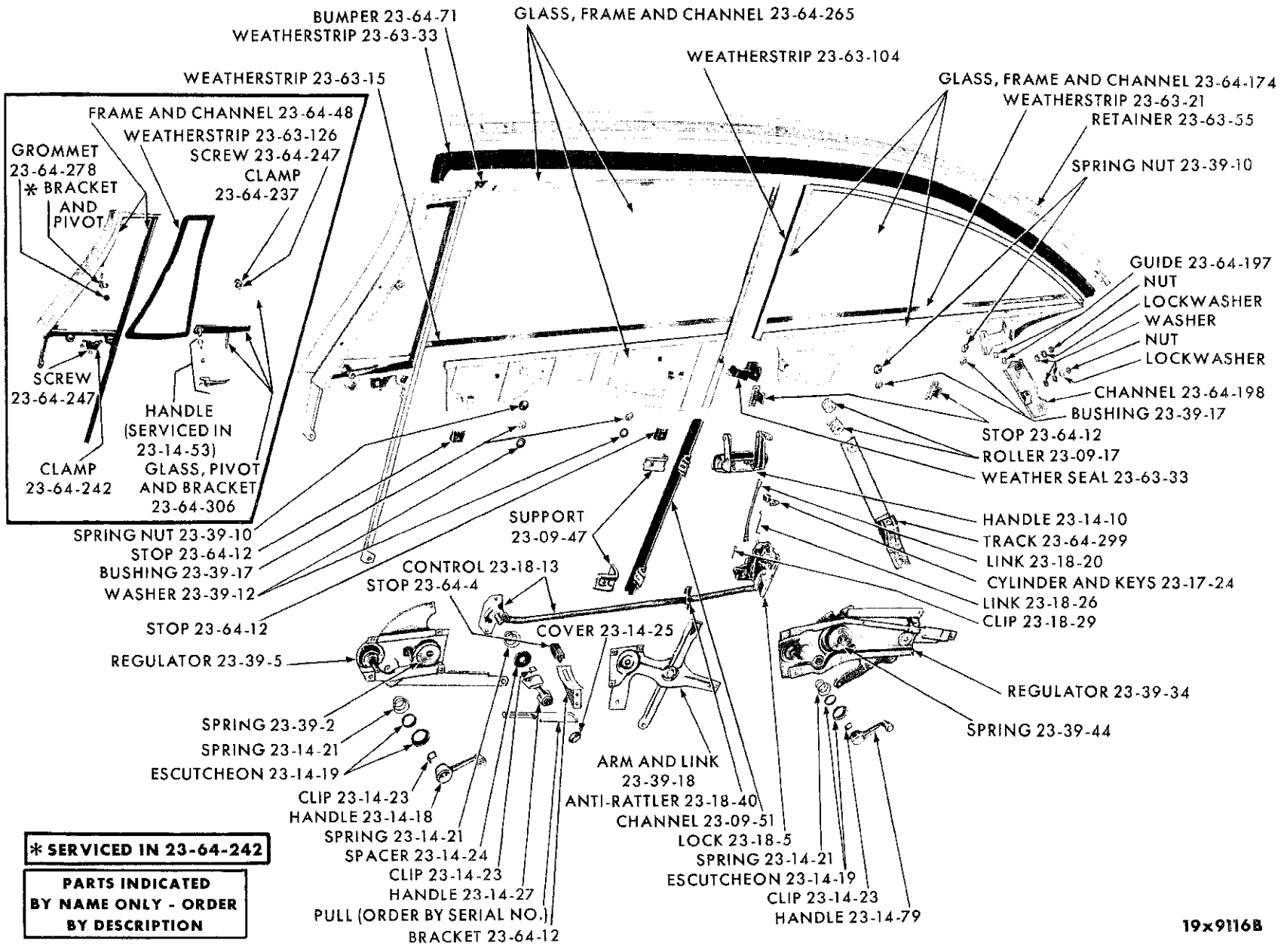

DOOR WINDOW REGULATORS AND RUNS - CHRYSLER SC1-2 SPECIAL CLUB COUPE

MyMopar.com

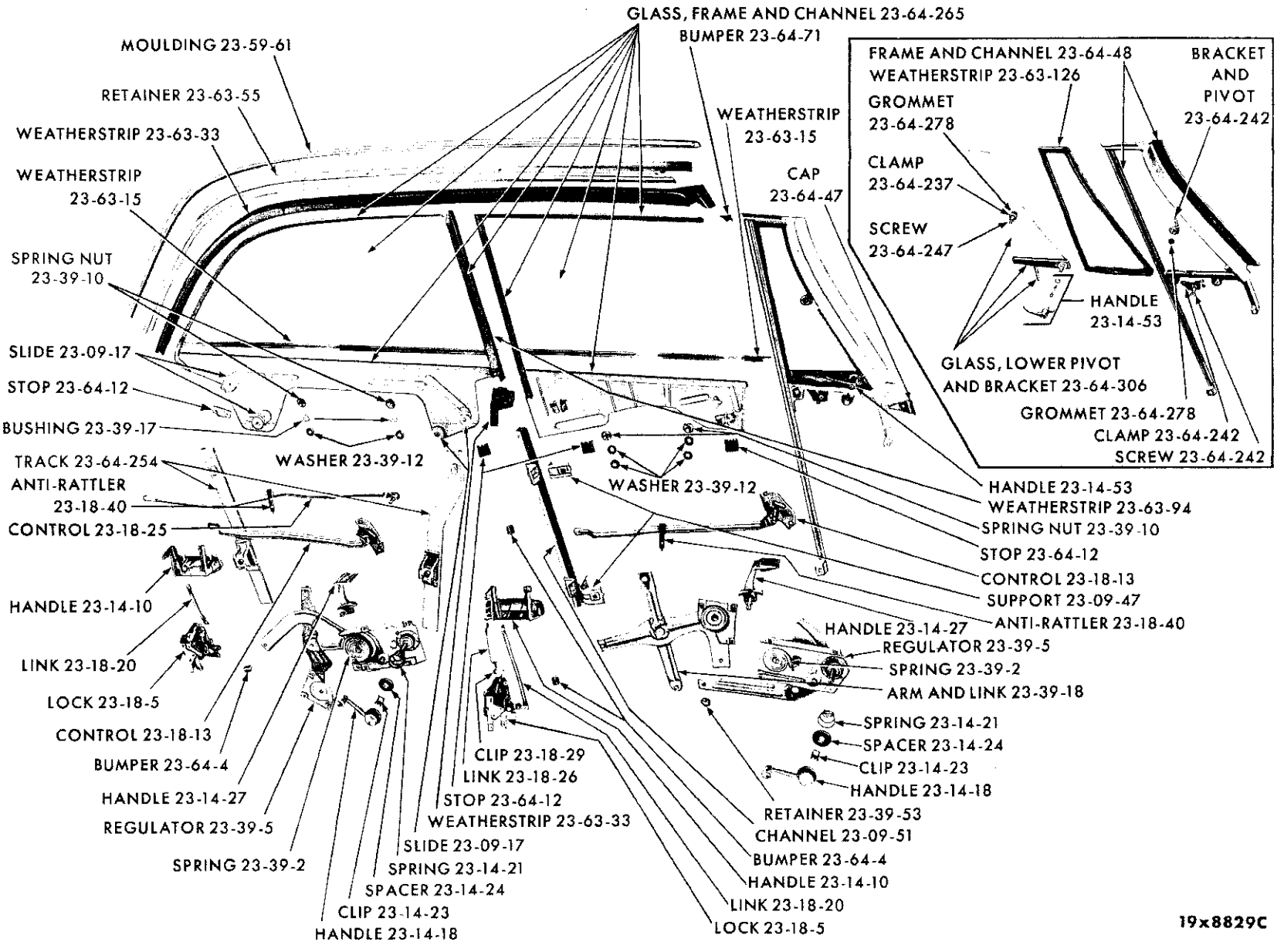

DOOR WINDOW REGULATORS AND RUNS - CHRYSLER SC1-2-3 SPECIAL 4 DOOR SEDAN

MyMopar.com

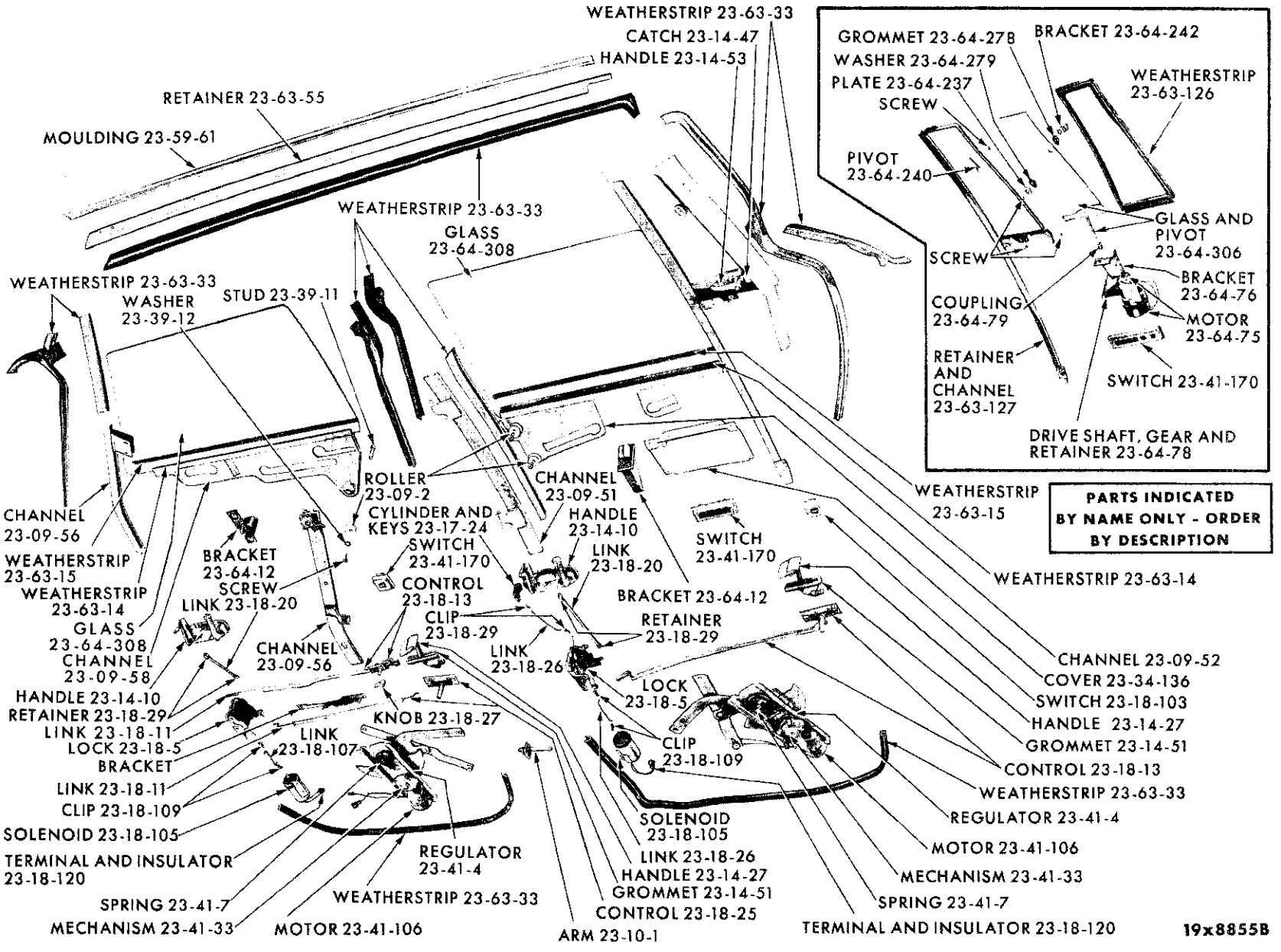

DOOR WINDOW REGULATORS AND RUNS - IMPERIAL SY1 SPECIAL 4 DOOR SEDAN

MyMopar.com

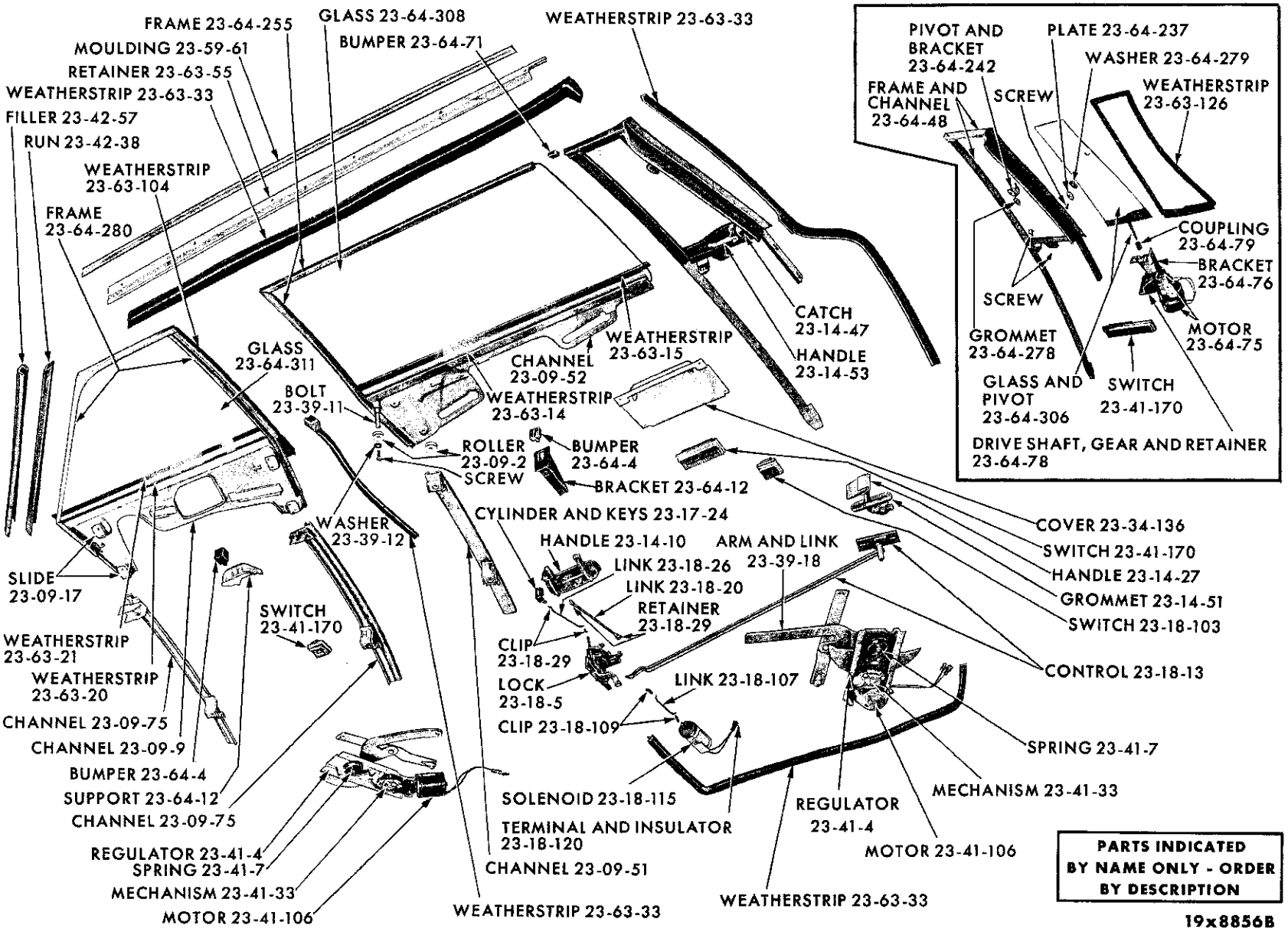

DOOR WINDOW REGULATORS AND RUNS - IMPERIAL SY1 SPECIAL CLUB COUPE

MyMopar.com

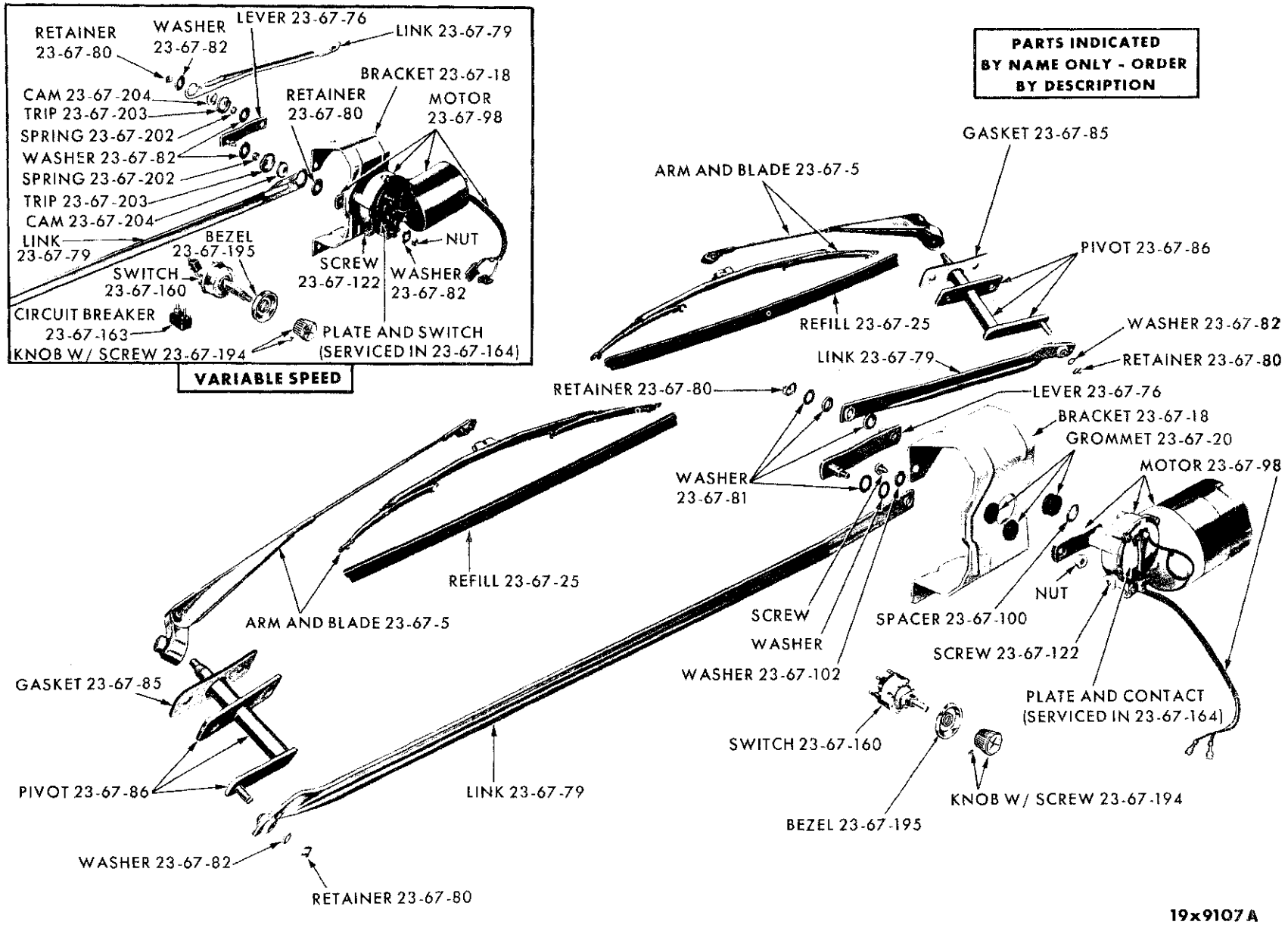

WINDSHIELD WIPER - PLYMOUTH SP1-2, DODGE SD1-2 AND CHRYSLER SC1-2-3

MyMopar.com

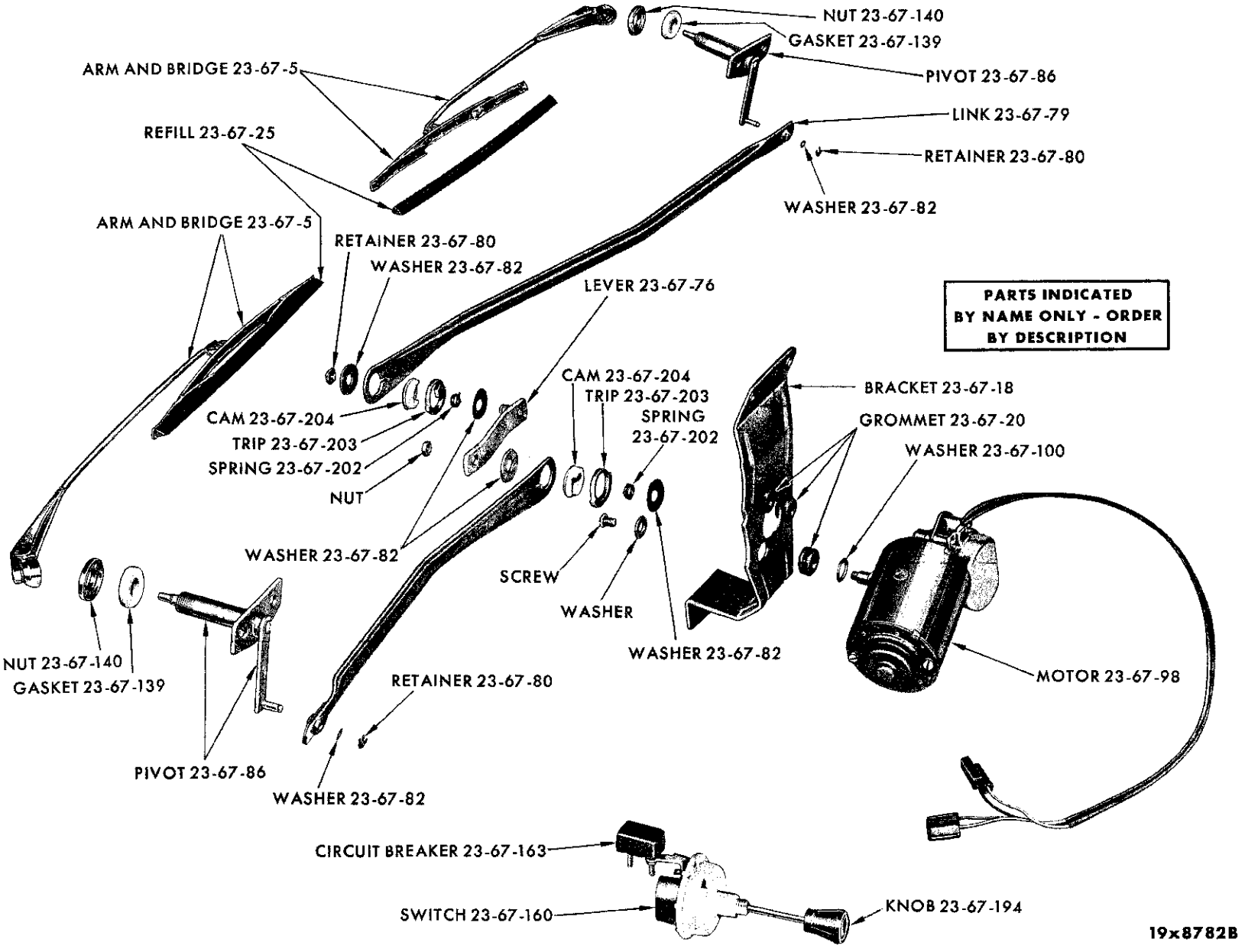

WINDSHIELD WIPER - VALIANT SV1 AND LANCER SL1

MyMopar.com

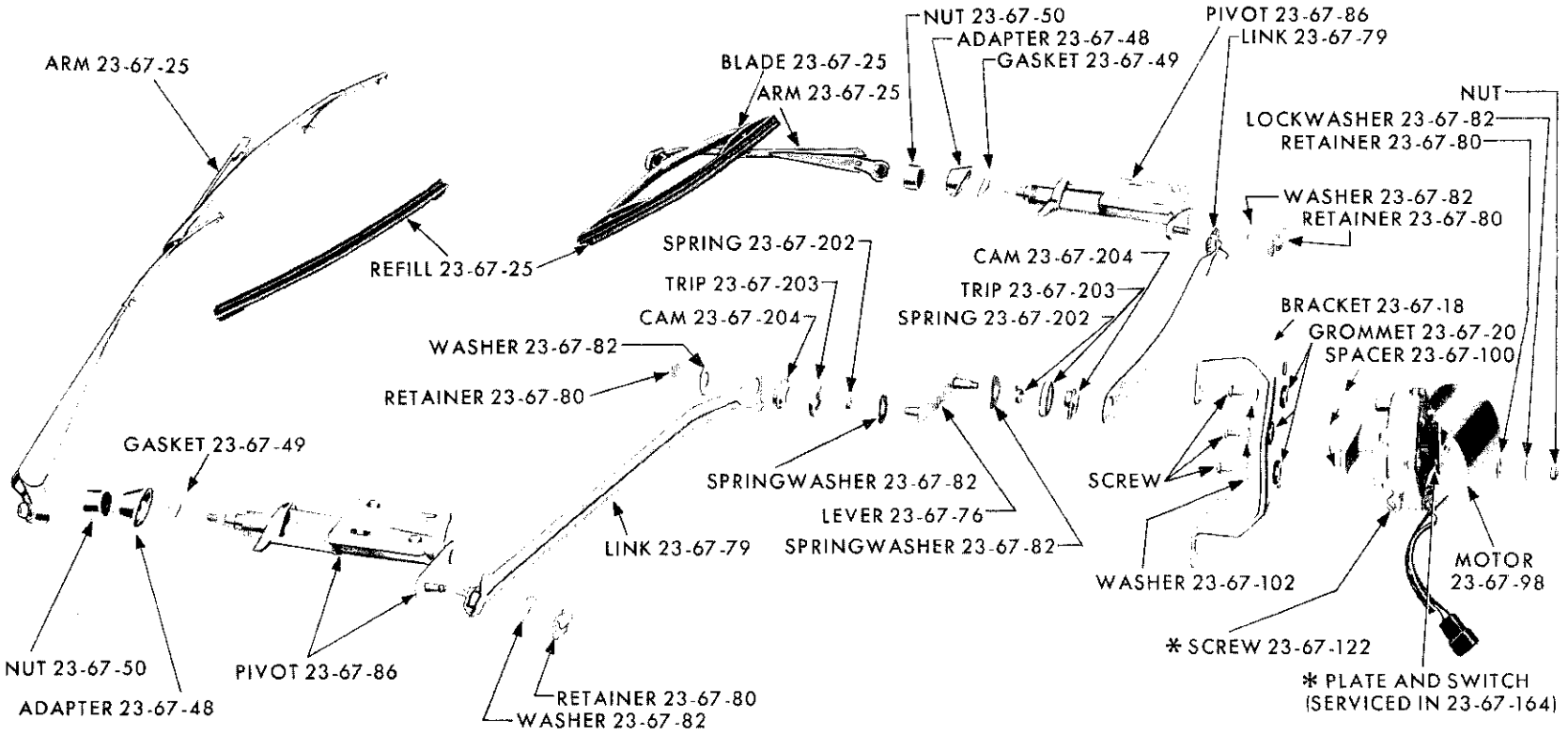

*** ALSO SERVICED IN 23-67-98**

PARTS INDICATED BY NAME ONLY - ORDER BY DESCRIPTION

19x8542C

MyMopar.com

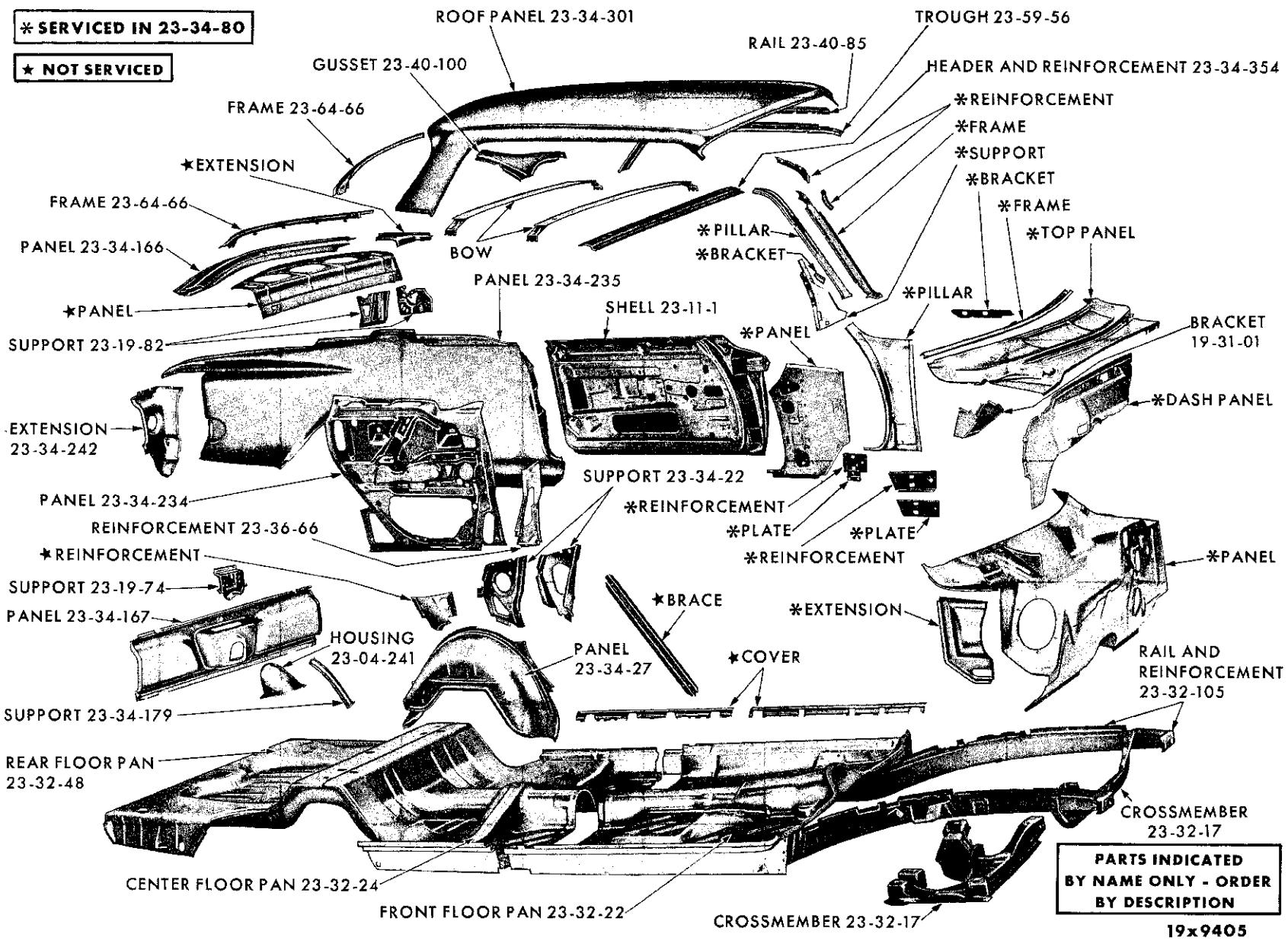

BODY - PLYMOUTH SP1-2 SPECIAL CLUB COUPE

MyMopar.com

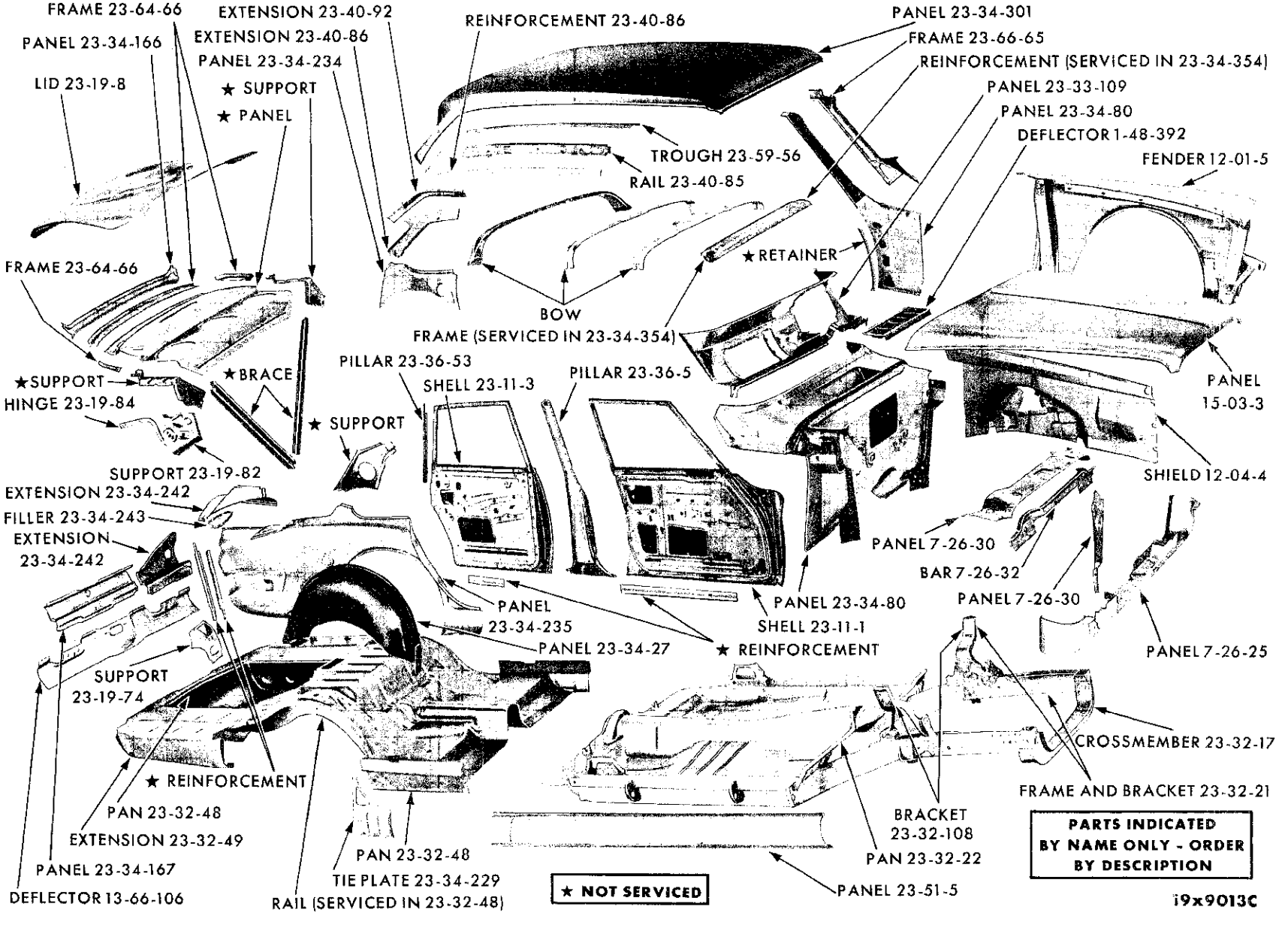

BODY - VALIANT SV1 4 DOOR SEDAN

MyMopar.com

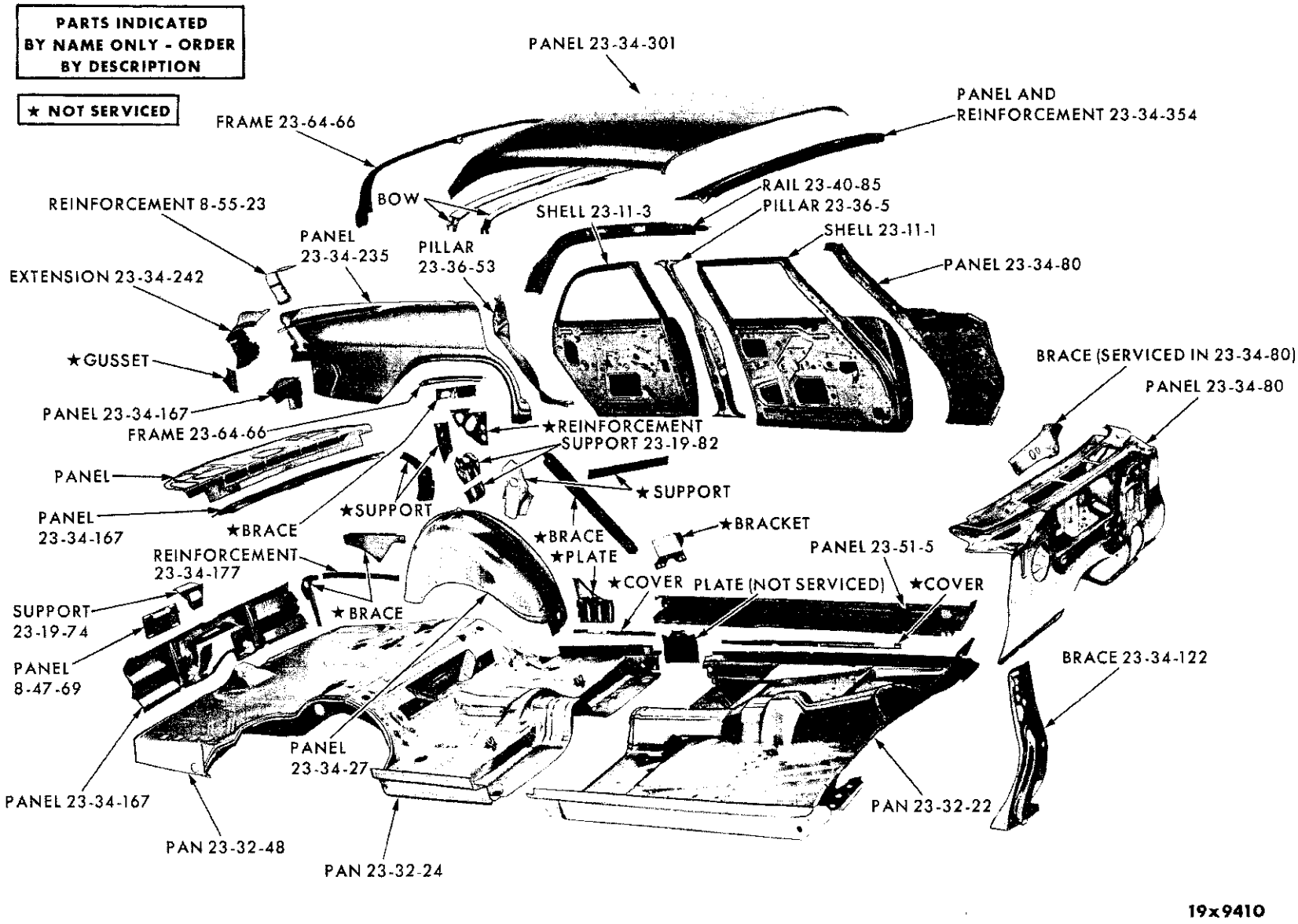

BODY - CHRYSLER SC1-2-3 4 DOOR SEDAN

MyMopar.com

CODE	PART NAME AND DESCRIPTION	CYL.	PER CAR	VALIANT LANCER	PLYMOUTH DODGE	CHRYSLER IMPERIAL

NOTES

★ Indicates use as required.
B Indicates parts not listed in any previous parts book.

Printed in U.S.A.
Prices and specifications subject to change without notice.
May 1, 1962 Supersedes Nov. 30, 1961.

MyMopar.com

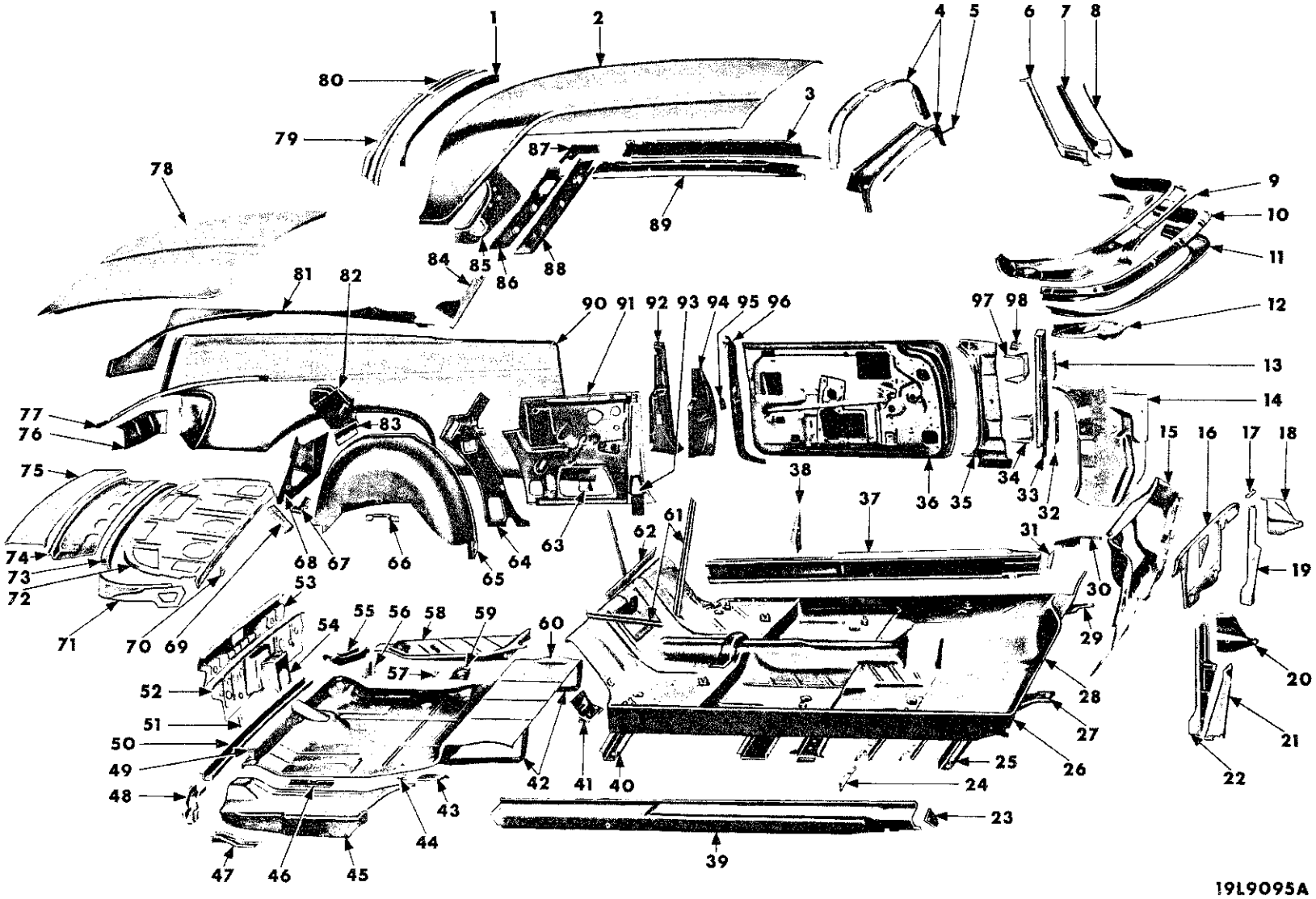

BODY - IMPERIAL SY1 SPECIAL CLUB COUPE

MyMopar.com

BODY - IMPERIAL SY1 SPECIAL CLUB COUPE

Ref. No.	Name	Part Type Code
1	Rear Window Opening Upper Frame	23-64-66
2	Roof Panel	23-34-301
3	Roof Side Rail	23-40-85
4	Windshield Opening Upper Frame (Serviced in 23-34-80)	
5	Windshield Header Trim Retainer (Serviced in 23-34-80)	
6	Front Hinge Pillar Extension (Serviced in 23-34-80)	
7	Windshield Opening Side Frame (Serviced in 23-34-80)	
8	Cowl Top Panel Extension (Serviced in 23-34-80)	
9	Cowl Top Panel (Serviced in 23-34-80)	
10	Windshield Opening Lower Frame (Serviced in 23-34-80)	
11	Windshield Opening Lower Frame Reinforcement (Serviced in 23-34-80)	
12	Front Pillar to Cowl Side Filler (Serviced in 23-34-80)	
13	Front Pillar Door Hinge Tapping Plate	23-15-13
14	Cowl Side Panel	23-34-80
15	Dash Panel	23-34-110
16	Dash Panel Air Duct Cover	23-34-116
17	Cowl Top Panel Hood Seal Support (Serviced in 23-34-80)	
18	Hood Hinge Support and Clinch Nut (Serviced in 23-34-80)	
19	Dash Panel No. 1 & 1A Body Bolt Brace and C/Nut	23-34-122
20	Hood Hinge Support and Clinch Nut (Serviced in 23-34-80)	
21	Dash Panel No. 1 & 1A Body Bolt Brace and Clinch Nut Reinforcement	23-34-126
22	Dash Panel No. 1 & 1A Body Bolt Brace and Clinch Nut	23-34-122
23	Body Side Sill Front End Cover	23-51-43
24	Body Floor Seat Track Reinforcement	Not Serviced
25	Floor Pan Reinforcement	Not Serviced
26	Body Side Inner Sill	23-51-5
27	No. 1 & 2 Body Bolt Strainer	Not Serviced
28	Front Floor Pan	Not Serviced
29	No. 1 & No. 2 Body Bolt Strainer	Not Serviced
30	Dash Panel Hood Hinge Support to Front Cowl Filler Reinforcement	Not Serviced
31	Body Side Sill End Cover	23-51-43
32	Front Pillar Door Hinge Tapping Plate	23-15-13
33	Front Pillar Front Half (Serviced in 23-34-80)	
34	Front Pillar Lower Hinge Reinforcement (Serviced in 23-34-80)	
35	Front Pillar Rear Half (Serviced in 23-34-80)	
36	Door Shell	23-11-1
37	Body Side Sill Outer Panel	23-51-5
38	Quarter Inside Panel to Seat Riser Brace	Not Serviced
39	Body Side Outer Sill	23-51-5
40	Body Floor Pan Reinforcement	Not Serviced
41	Axle Drive Pinion Carrier Bumper Reinforcement	Not Serviced
42	Fuel Tank Rear Floor Pan Reinforcement	Not Serviced
43	No. 5 Body Bolt Floor Pan Reinforcement	Not Serviced
44	Fuel Tank Hanger	Not Serviced
45	Rear Floor Pan Side Extension	23-32-49
46	Floor Pan Spare Wheel Bracket Reinforcement	Not Serviced
47	Fuel Tank Rear Floor Pan Reinforcement Extension	Not Serviced
48	No. 6 Body Bolt Floor Pan Reinforcement Extension	Not Serviced
49	No. 6 Body Bolt Reinforcement to Floor Pan Spacer	23-05-36
50	No. 6 Body Bolt Floor Pan Reinforcement	Not Serviced
51	Deck Opening Lower Panel Drain Trough Support	Not Serviced
52	Deck Opening Lower Panel Reinforcement	23-34-179
53	Deck Opening Lower Panel	23-34-167
54	Deck Opening Lower Panel Lock Support	23-19-74
55	No. 6 Body Bolt Floor Pan Reinforcement	Not Serviced
56	Rear Floor Pan Jack Stowage Bracket	Not Serviced
57	Spare Wheel Anchor Stud Bracket	Not Serviced
58	Extension	23-32-49
59	No. 5 Body Bolt Floor Pan Reinforcement	Not Serviced
60	Rear Floor Pan	23-32-48
61	Shelf Panel to Floor Brace	Not Serviced
62	Shelf Panel to Floor Center Brace Support	Not Serviced
63	Quarter Window Lower Stop Support	23-64-12
64	Quarter Inside Panel to Wheelhouse Reinforcement	23-34-249
65	Panel	23-34-27
66	Deck Lid Hinge Support to Wheelhouse Bracket	23-19-76
67	Wheelhouse Jack Stowage Bracket	Not Serviced
68	Support	Not Serviced
69	Shelf Panel to Wheelhouse Gusset	Not Serviced
70	Rear Seat Back Hanger	Not Serviced
71	Belt Side Bar	23-51-41
72	Shelf Panel	Not Serviced
73	Belt Center Bar (Serviced in 23-34-166)	
74	Deck Opening Upper Panel Reinforcement (Serviced in 23-34-166)	
75	Deck Opening Upper Panel	23-34-166
76	Extension	23-34-176
77	Reinforcement	23-59-37
78	Deck Lid	23-19-8
79	Rear Window Upper Frame Reinforcement, Right	23-64-67
80	Rear Window Upper Frame Reinforcement, Left	23-64-67
81	Panel	23-34-233
82	Deck Lid Hinge Body Bracket Support	23-19-82
83	Deck Lid Hinge Support to Wheelhouse Bracket	Not Serviced
84	Roof Side Rail Extension	23-40-92
85	Rear Window Side Frame	23-64-66
86	Roof Side Rear Outer Rail	23-40-85
87	Gusset	Not Serviced
88	Roof Side Rear Inner Rail	23-40-85
89	Roof Side Rail	23-40-85
90	Quarter Panel	23-34-235
91	Quarter Inner Panel	23-34-234
92	Quarter Inside Panel to Lock Pillar Extension	Not Serviced
93	Quarter Inside Panel to Outer Sill Reinforcement	23-51-6
94	Body Lock Pillar Reinforcement	23-36-66
95	Door Lock Striker Tapping Plate	23-08-75
96	Body Lock Pillar	23-36-53
97	Front Pillar Upper Hinge Reinforcement (Serviced in 23-34-80)	
98	Windshield Opening Lower Frame to Upper Strg. Column Bracket (Serviced in 23-34-80)	

MyMopar.com

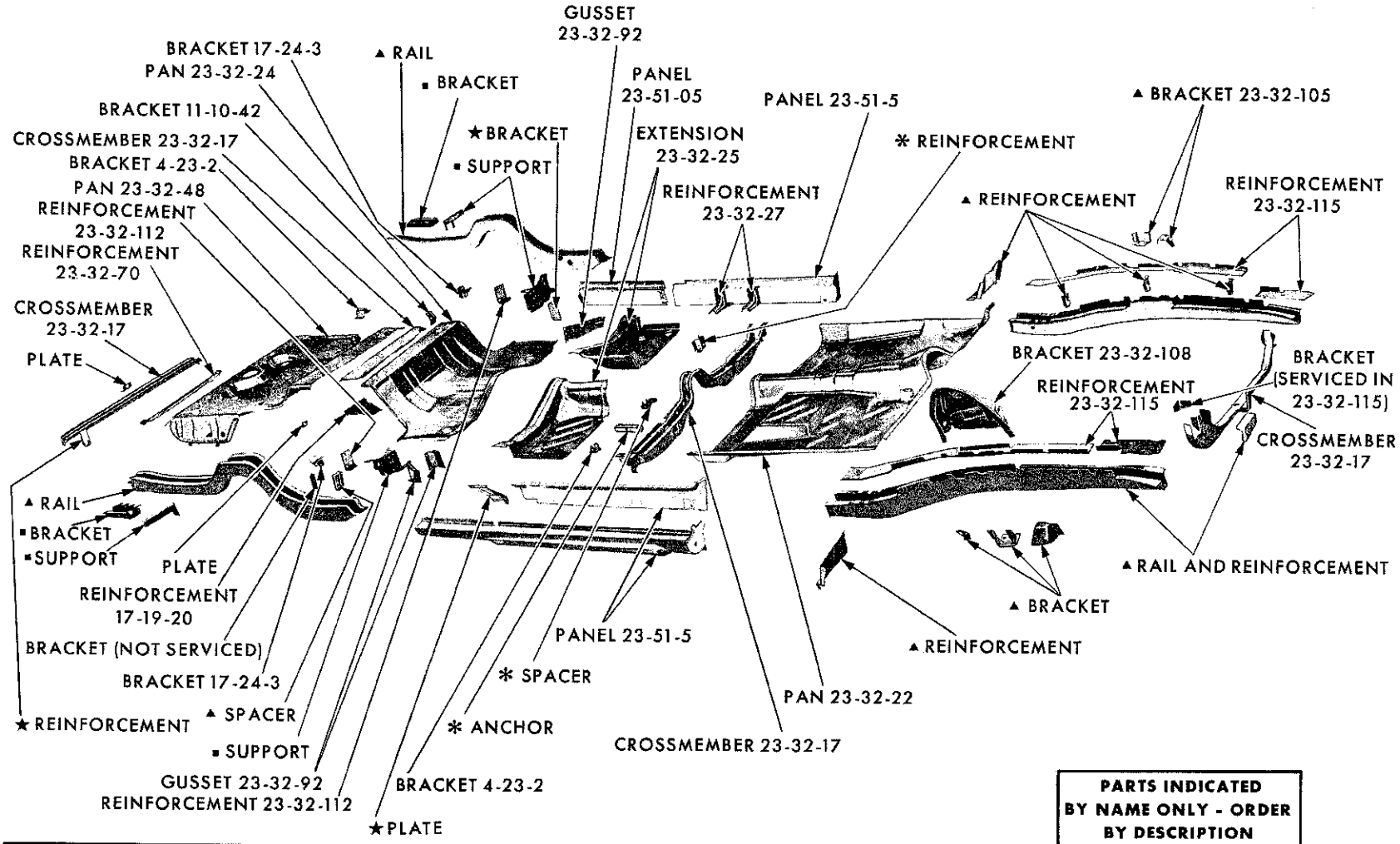

FLOOR PAN - PLYMOUTH SP1-2

MyMopar.com

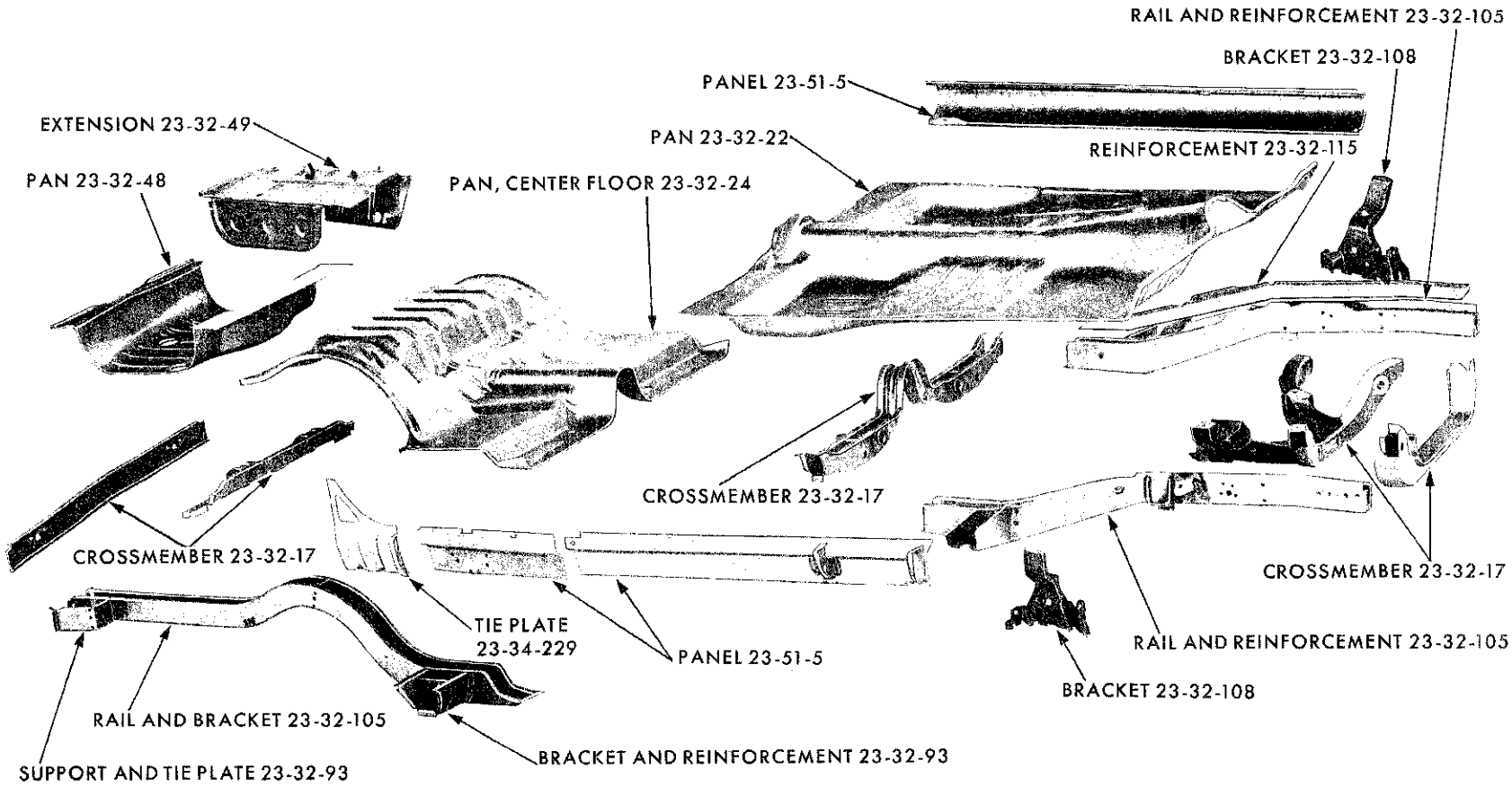

UNDERBODY - VALIANT SV1 AND LANCER SL1

MyMopar.com

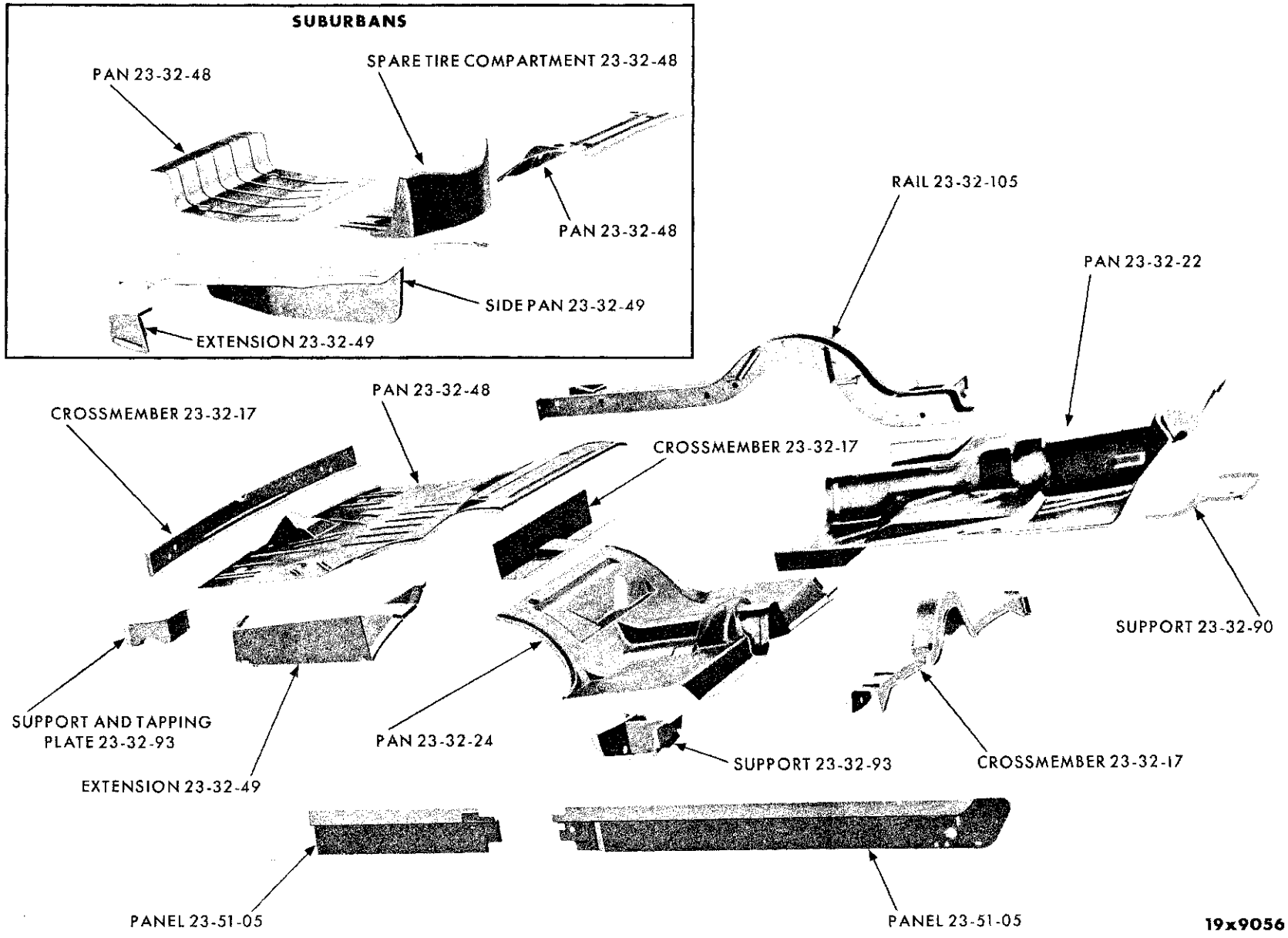

UNDERBODY - PLYMOUTH SP1-2, DODGE SD1-2 AND CHRYSLER SC1-2-3

MyMopar.com

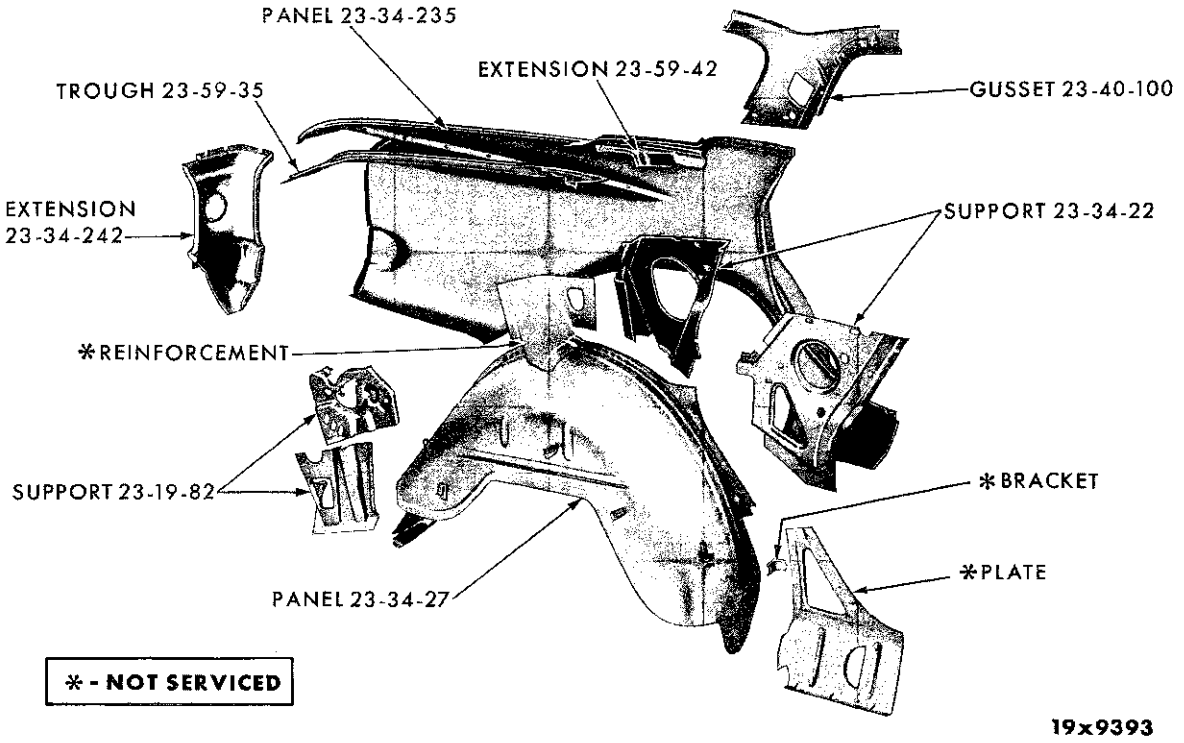

REAR QUARTER PANEL - PLYMOUTH SP1-2 4 DOOR SEDAN AND SPECIAL 4 DOOR SEDAN

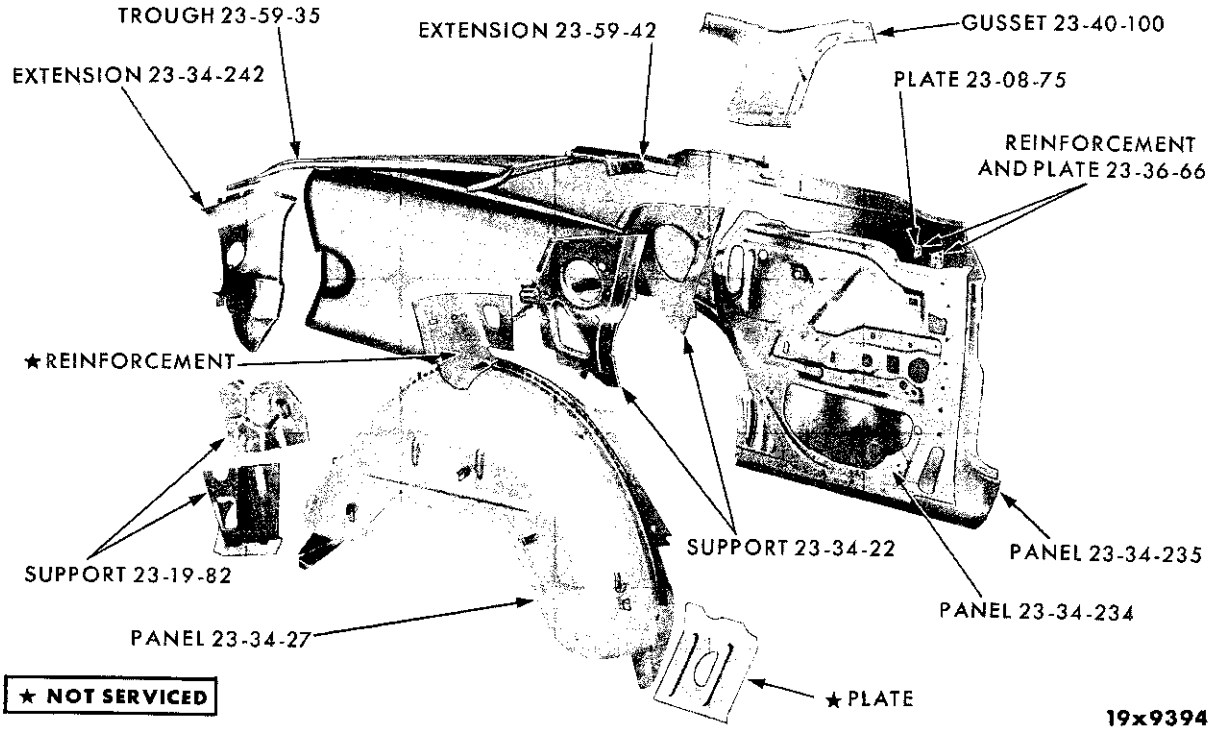

REAR QUARTER PANEL - PLYMOUTH SP1-2 CLUB SEDAN AND SPECIAL CLUB COUPE

MyMopar.com

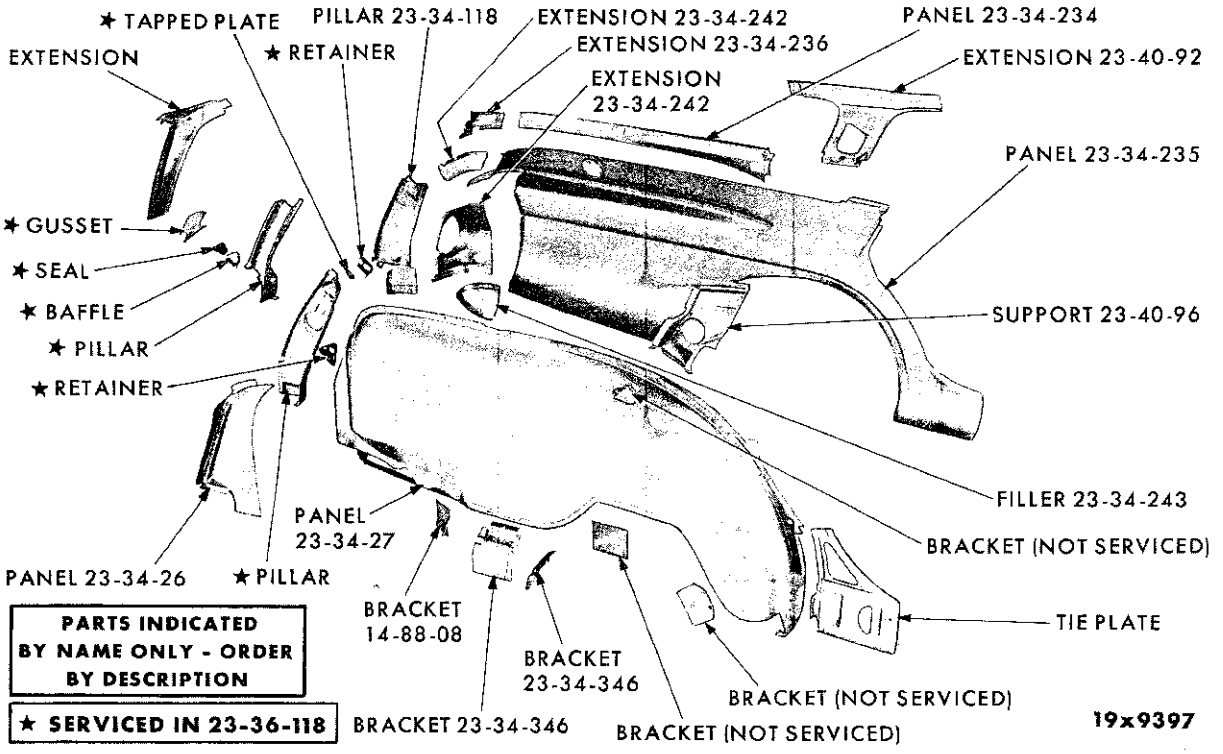

REAR QUARTER PANEL - PLYMOUTH SP1-2 4 DOOR SUBURBAN

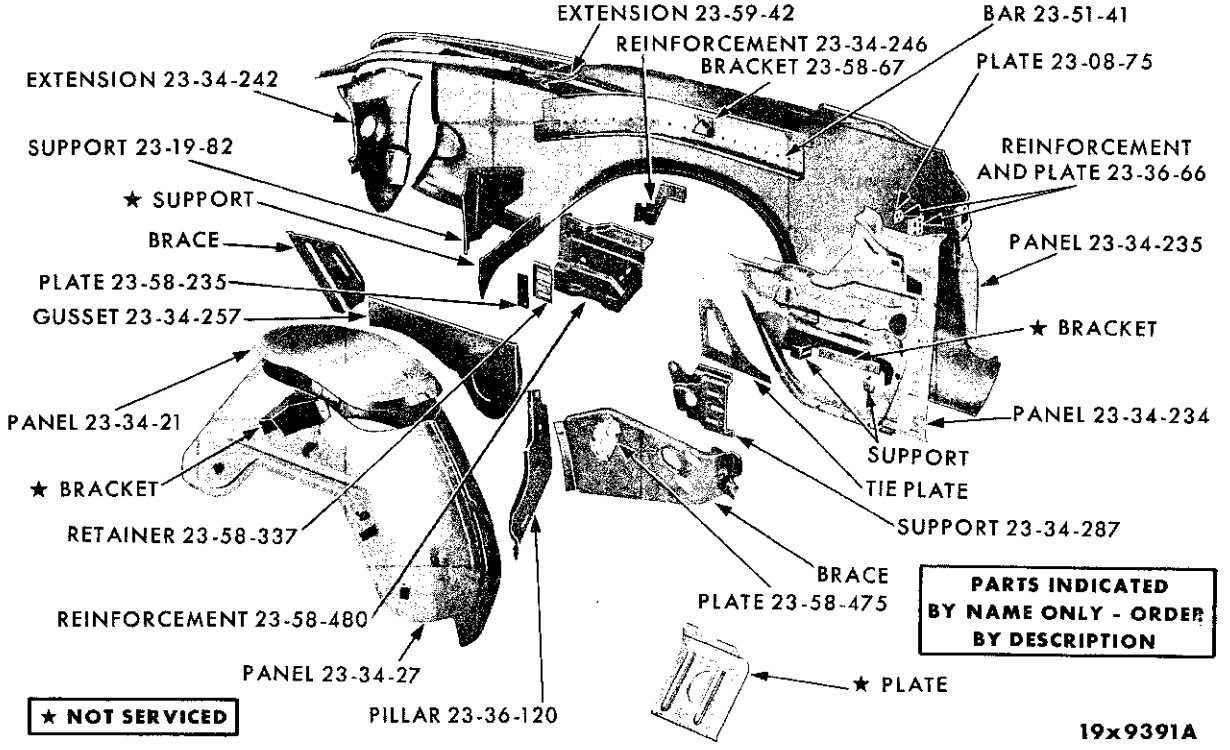

REAR QUARTER PANEL - PLYMOUTH SP2 CONVERTIBLE COUPE

MyMopar.com

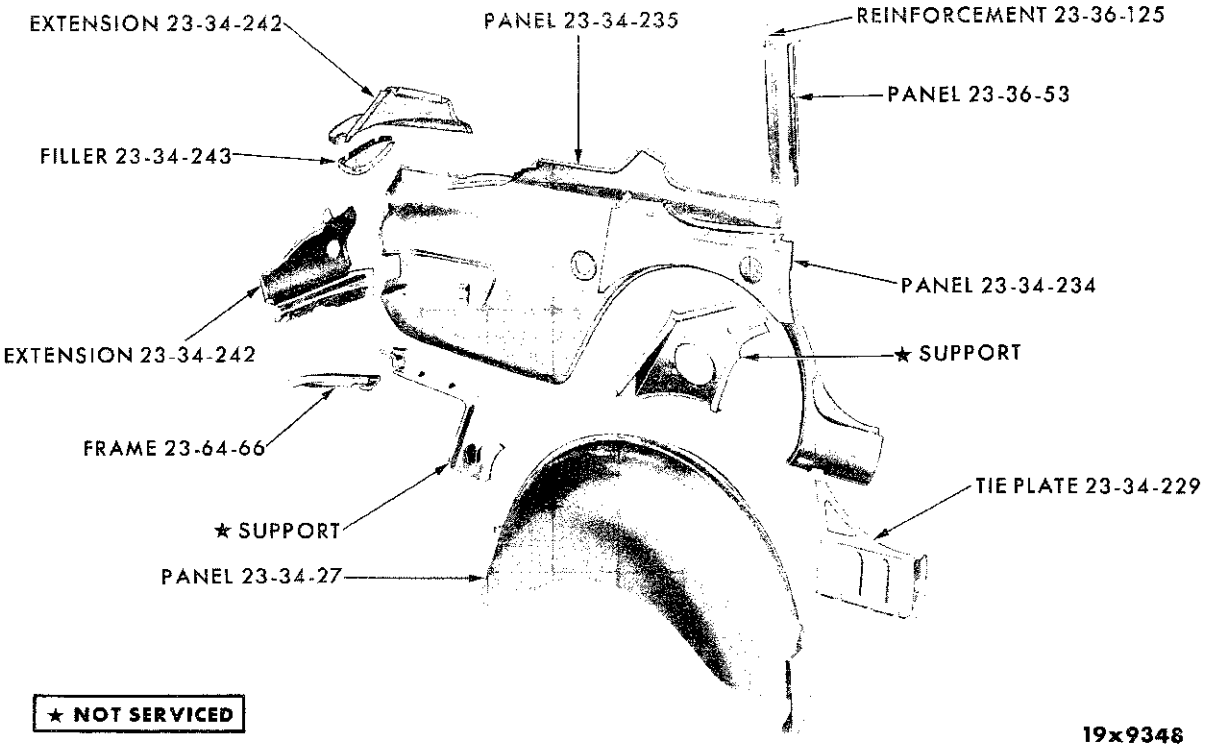

REAR QUARTER PANEL - VALIANT SV1 4 DOOR SEDAN

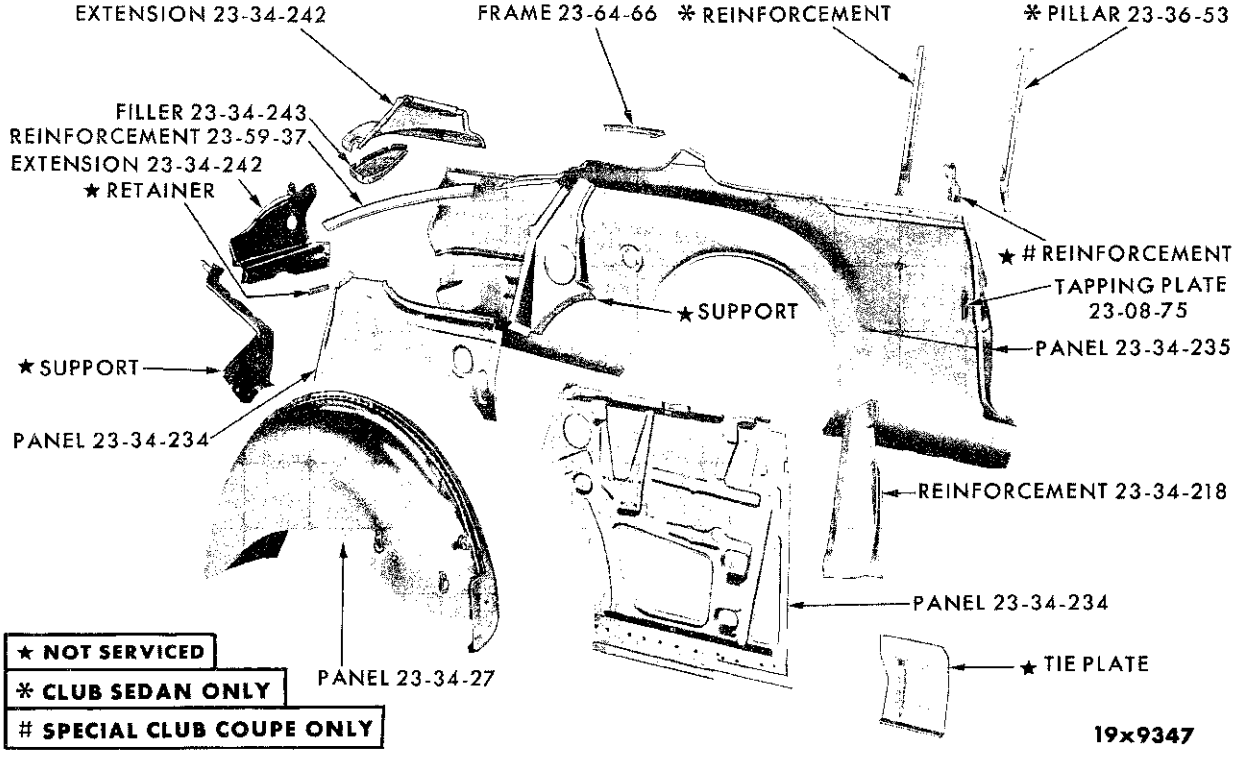

REAR QUARTER PANEL - VALIANT SV1 CLUB SEDAN AND SPECIAL CLUB COUPE

MyMopar.com

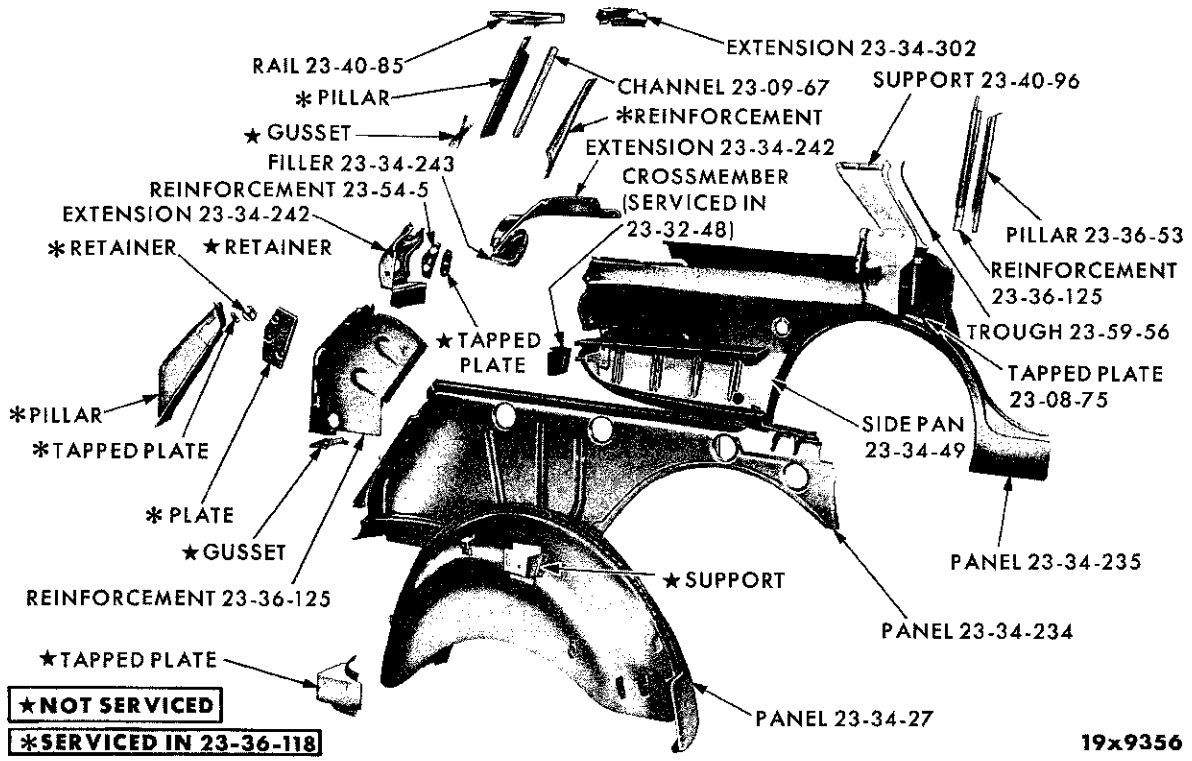

REAR QUARTER PANEL - VALIANT SV1 4 DOOR SUBURBAN

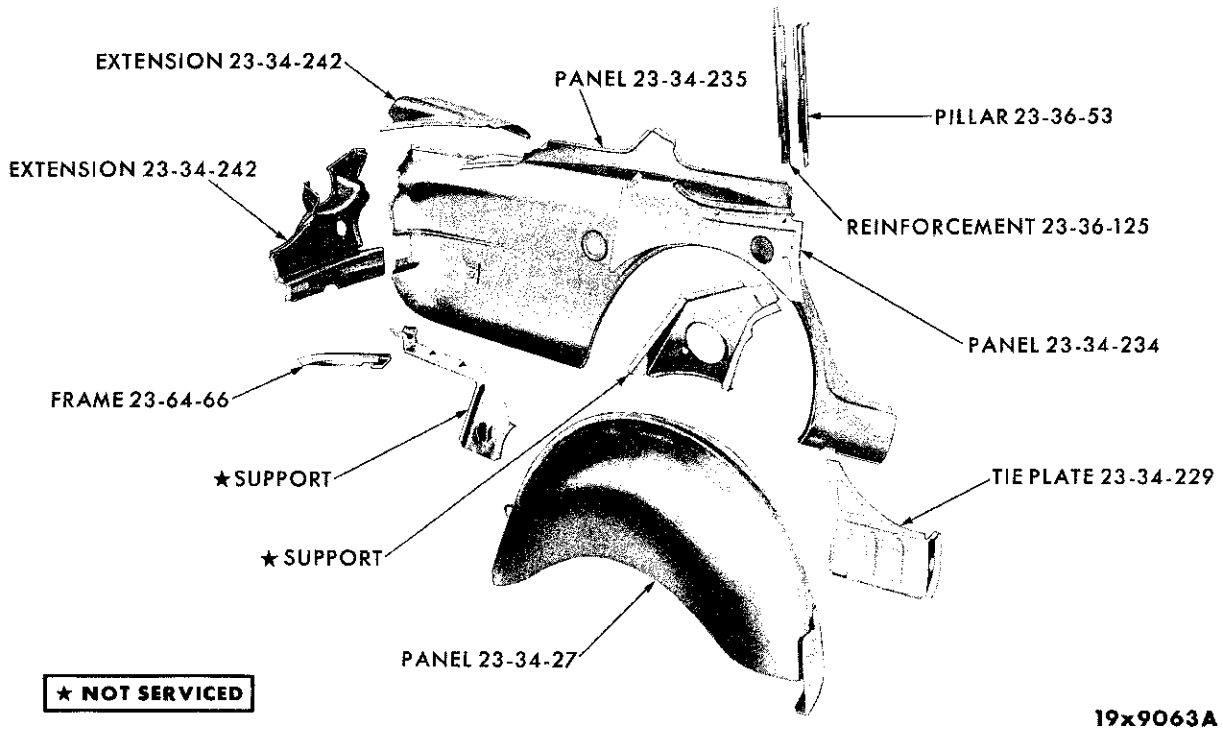

REAR QUARTER PANEL - LANCER SL1 4 DOOR SEDAN

MyMopar.com

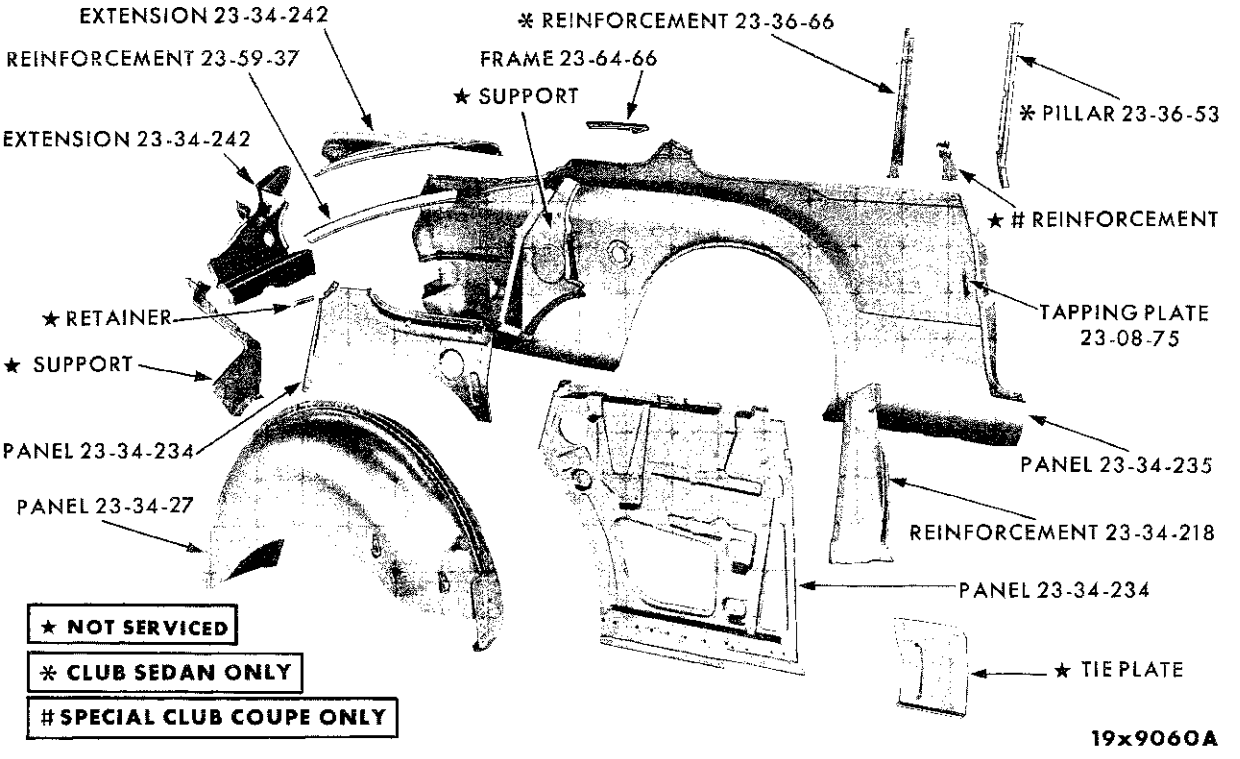

REAR QUARTER PANEL - LANCER SL1 CLUB SEDAN AND SPECIAL CLUB COUPE

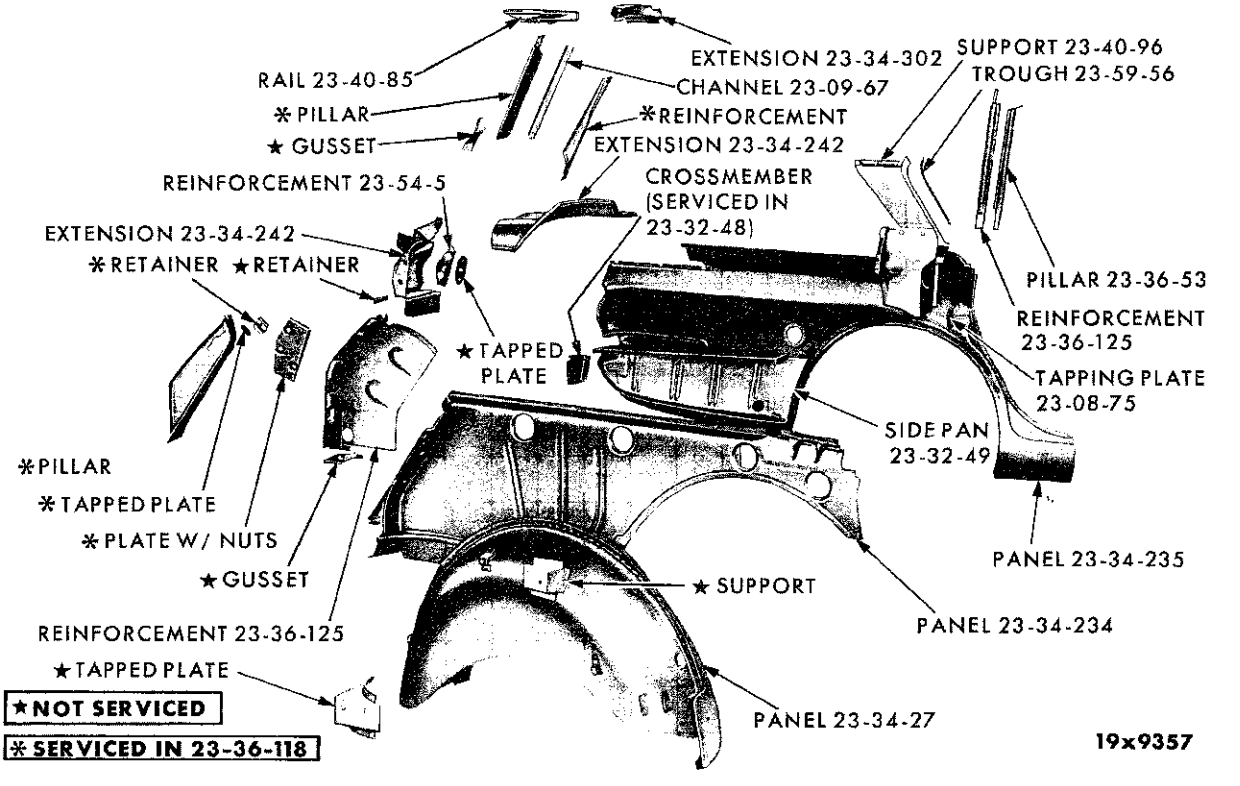

REAR QUARTER PANEL - LANCER SL1 4 DOOR SUBURBAN

MyMopar.com

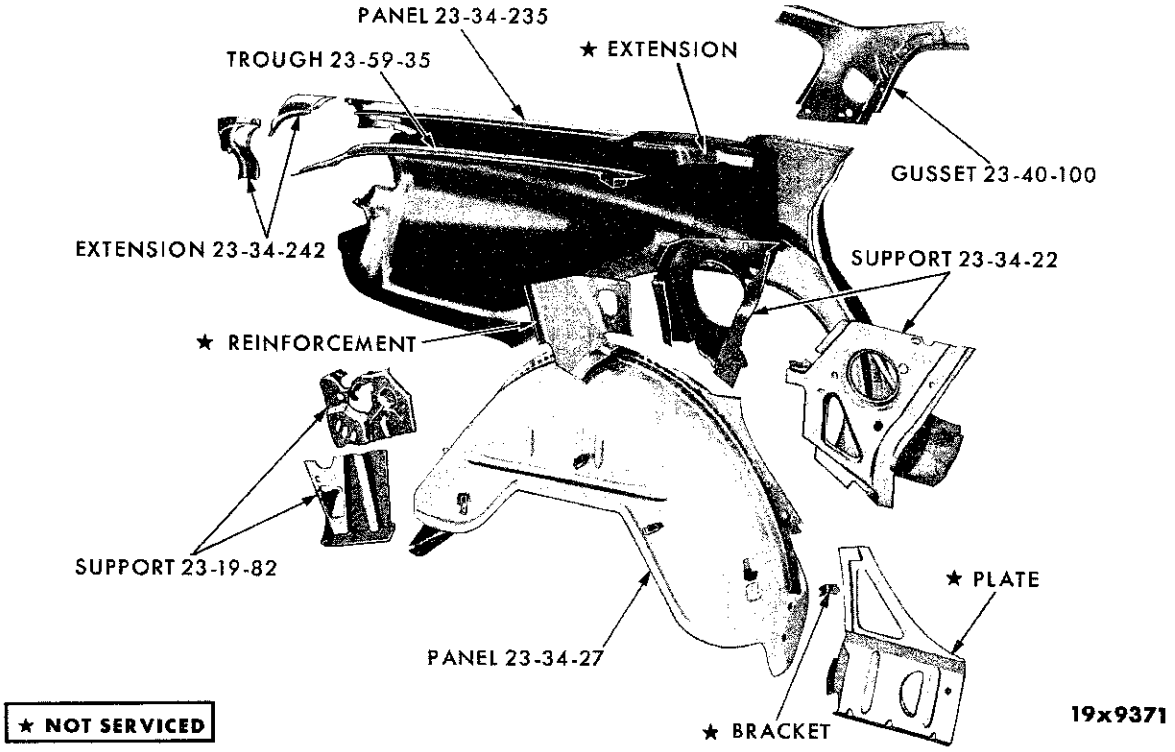

REAR QUARTER PANEL - DART SD1-2 4 DOOR SEDAN AND SPECIAL 4 DOOR SEDAN

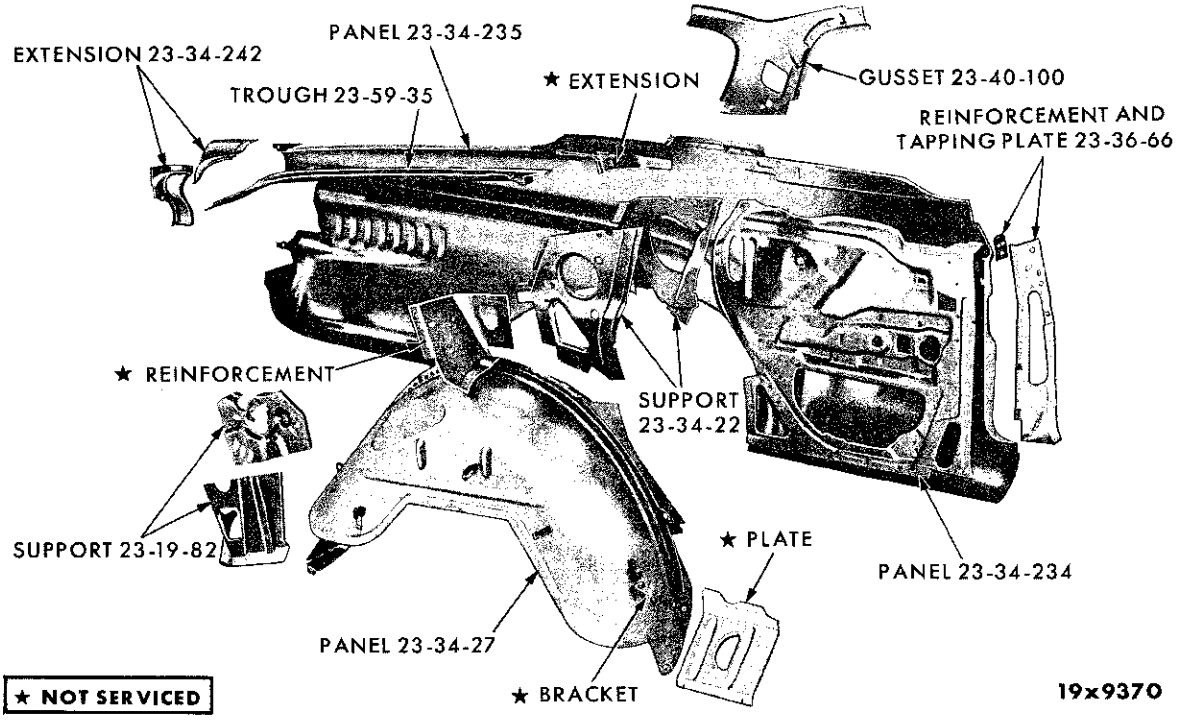

REAR QUARTER PANEL - DART SD1-2 CLUB SEDAN AND SPECIAL CLUB COUPE

MyMopar.com

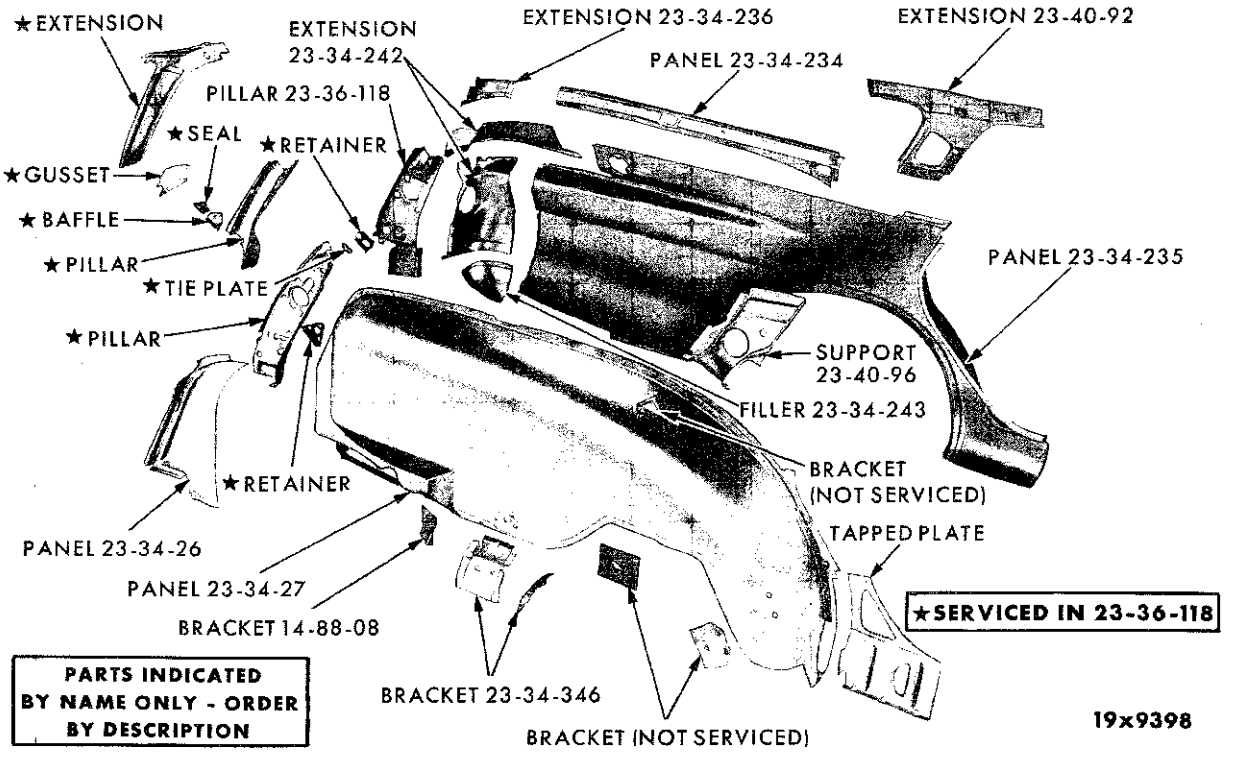

REAR QUARTER PANEL - DART SD1-2 4 DOOR SUBURBAN

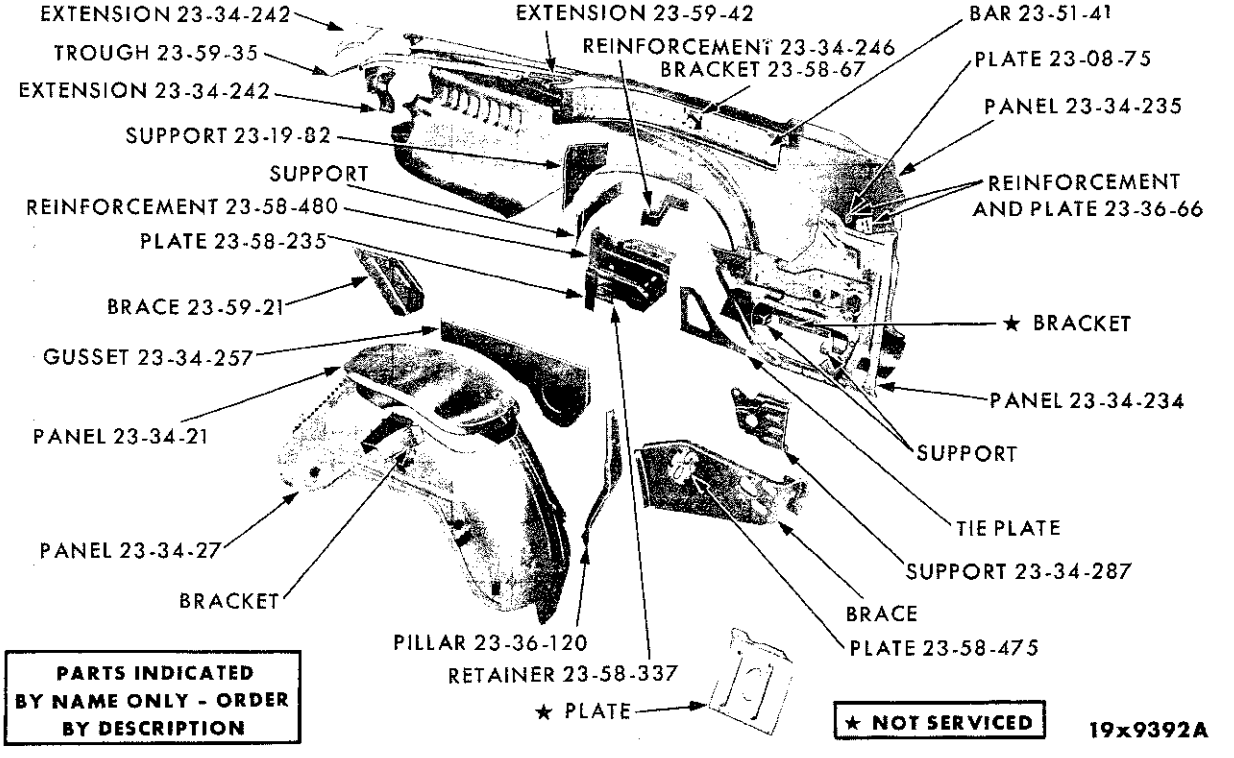

REAR QUARTER PANEL - DODGE SD2 CONVERTIBLE COUPE

MyMopar.com

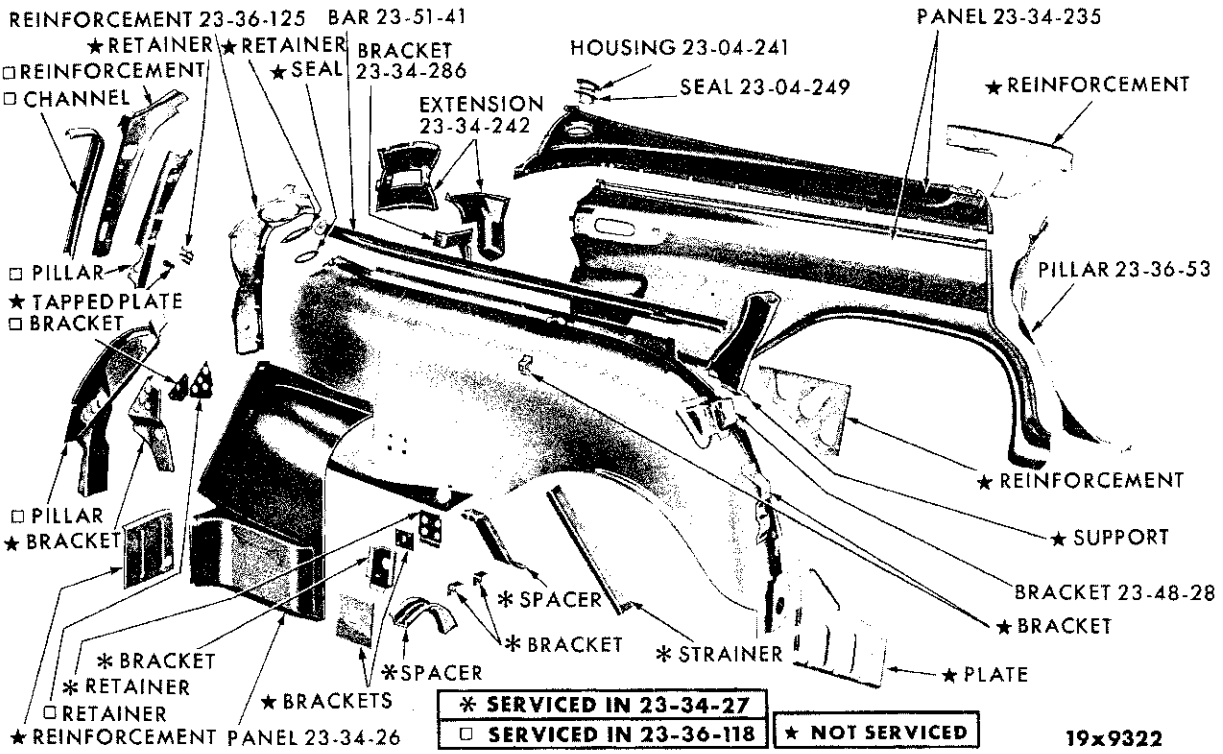

REAR QUARTER PANEL - CHRYSLER SC1-3 SPECIAL 4 DOOR SUBURBAN

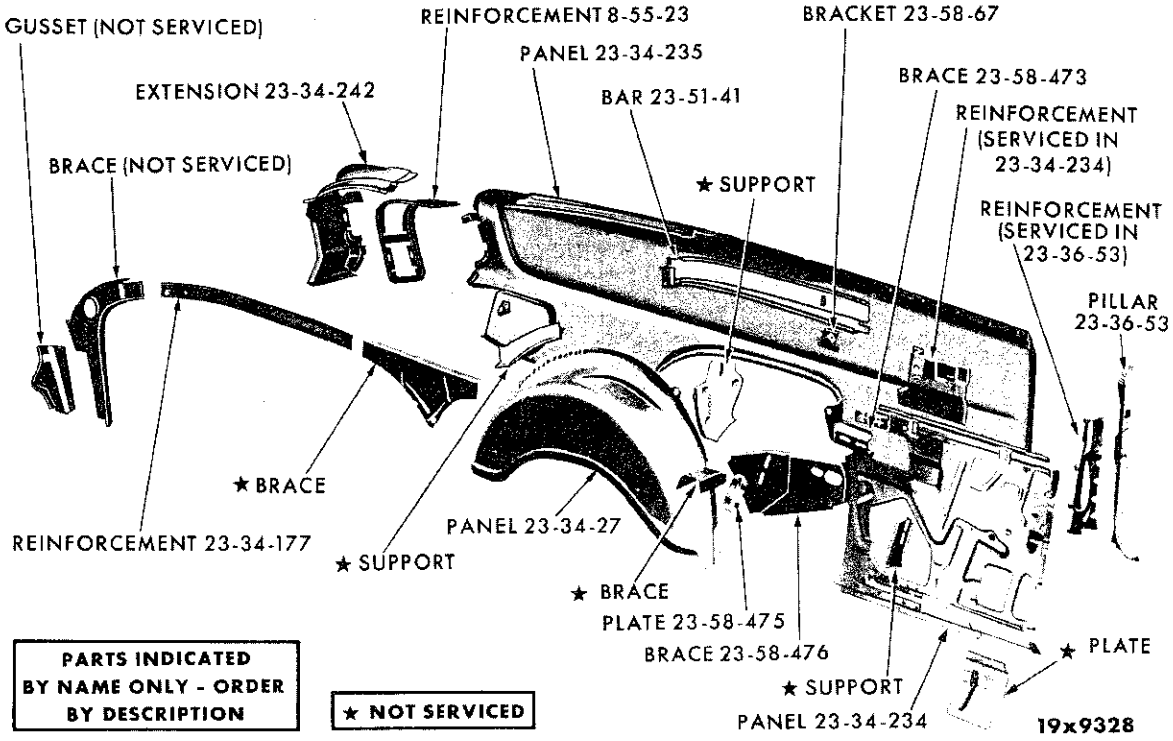

REAR QUARTER PANEL - CHRYSLER SC1(L), SC2(M) CONVERTIBLE COUPE

MyMopar.com

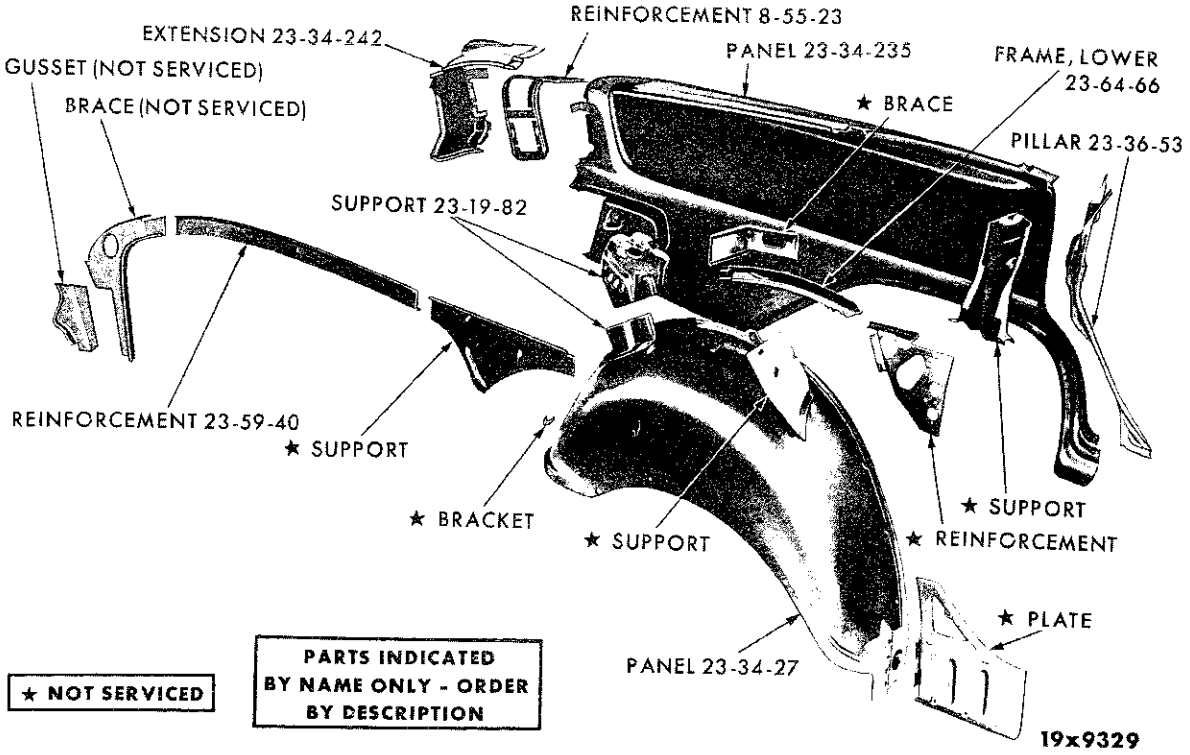

REAR QUARTER PANEL - CHRYSLER SC1-2-3 SPECIAL 4 DOOR SEDAN

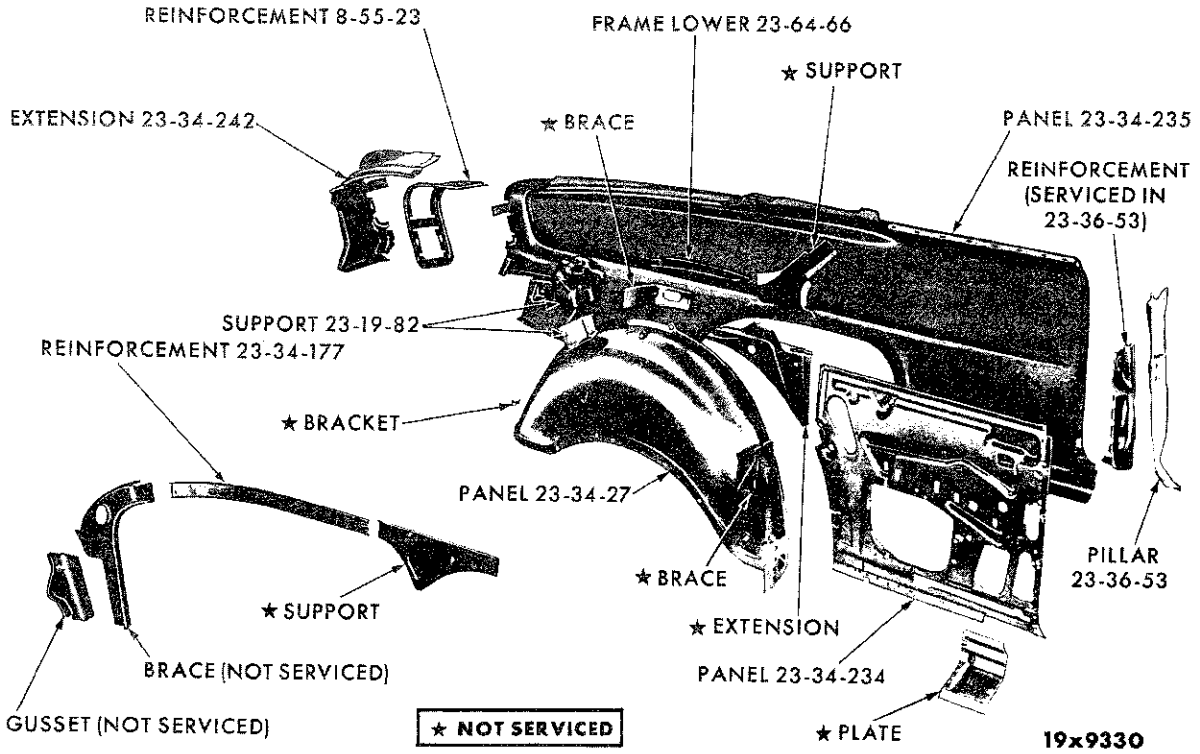

REAR QUARTER PANEL - CHRYSLER SC1-2-3 SPECIAL CLUB COUPE

MyMopar.com

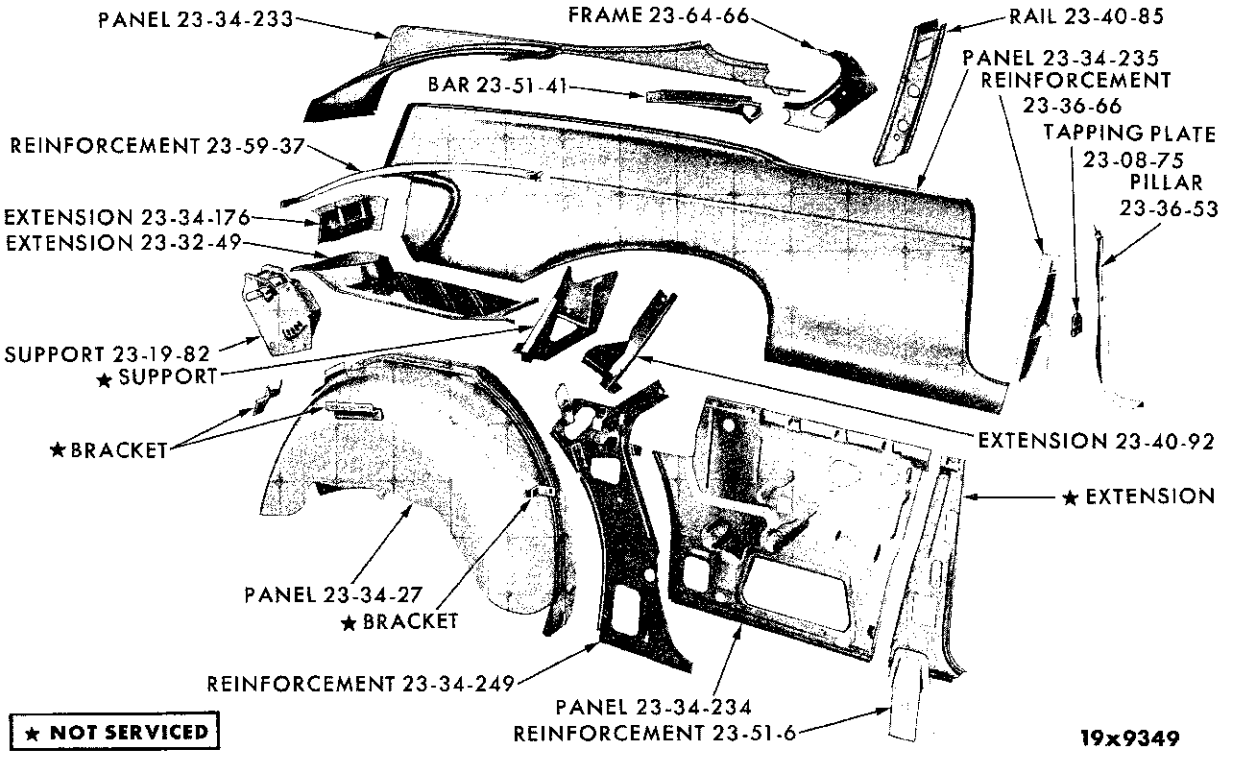

REAR QUARTER PANEL - IMPERIAL SY1 SPECIAL CLUB COUPE

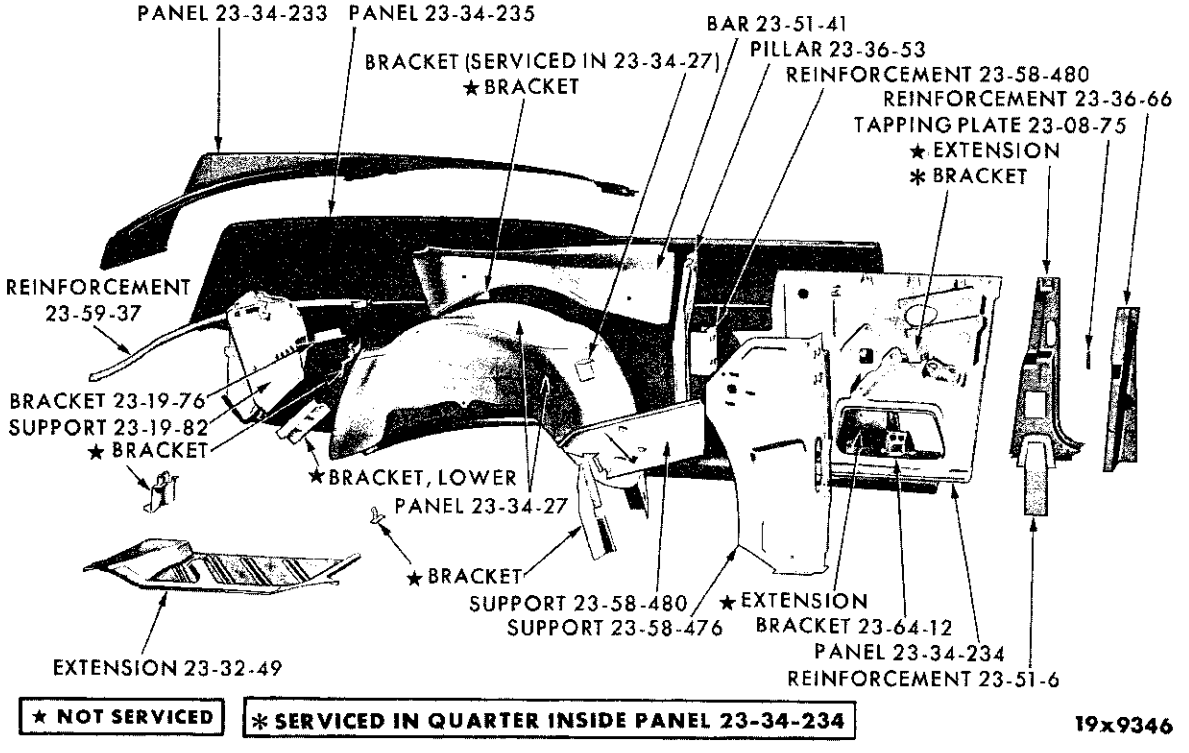

REAR QUARTER PANEL - IMPERIAL SY1 CONVERTIBLE COUPE

MyMopar.com

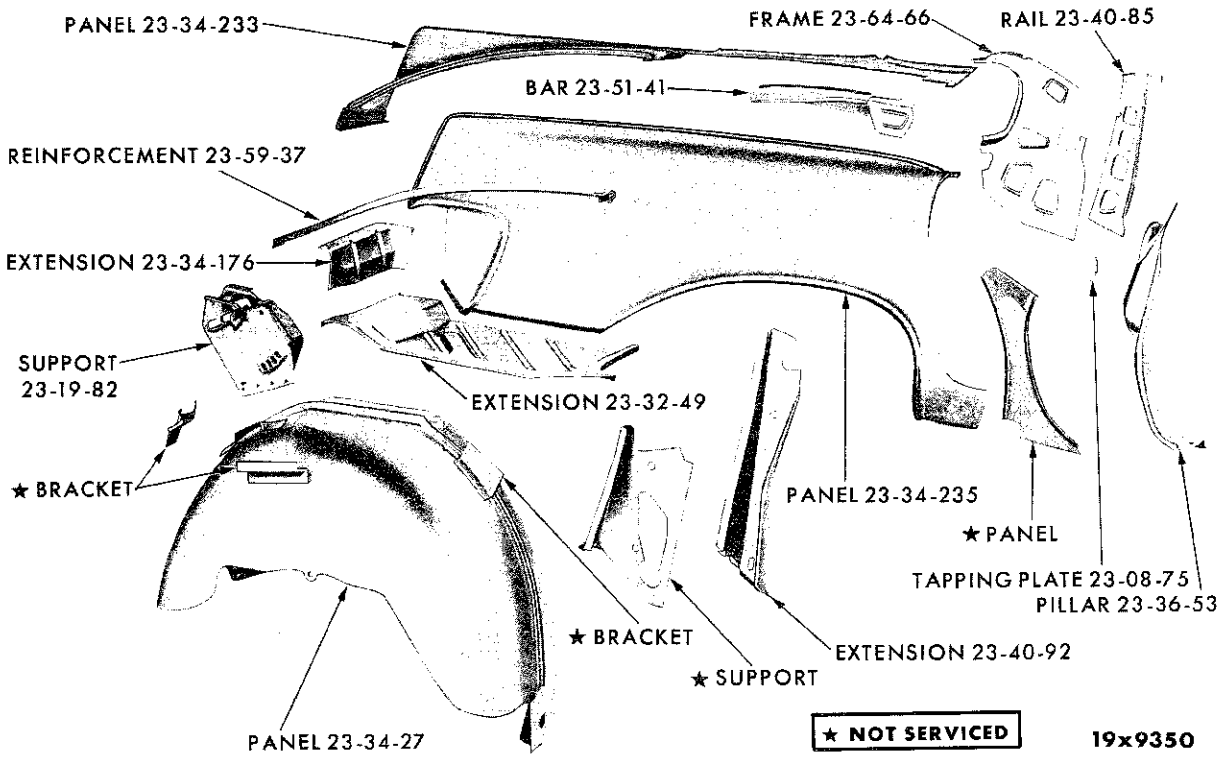

REAR QUARTER PANEL - IMPERIAL SY1 SPECIAL 4 DOOR SEDAN

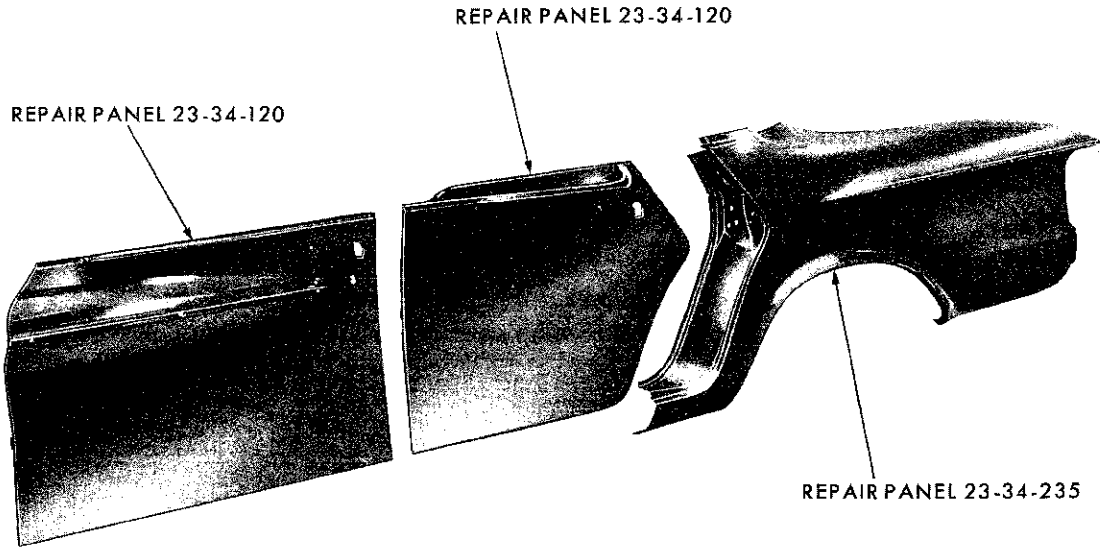

REPAIR PANEL - PLYMOUTH SP1-2

MyMopar.com

CODE	PART NAME AND DESCRIPTION	CYL.	PER CAR	VALIANT LANCER	PLYMOUTH DODGE	CHRYSLER IMPERIAL

NOTES

★ Indicates use as required.
⊟ Indicates parts not listed in any previous parts book.
May 1, 1962.

Printed in U.S.A.
Prices and specifications subject to change without notice.

MyMopar.com

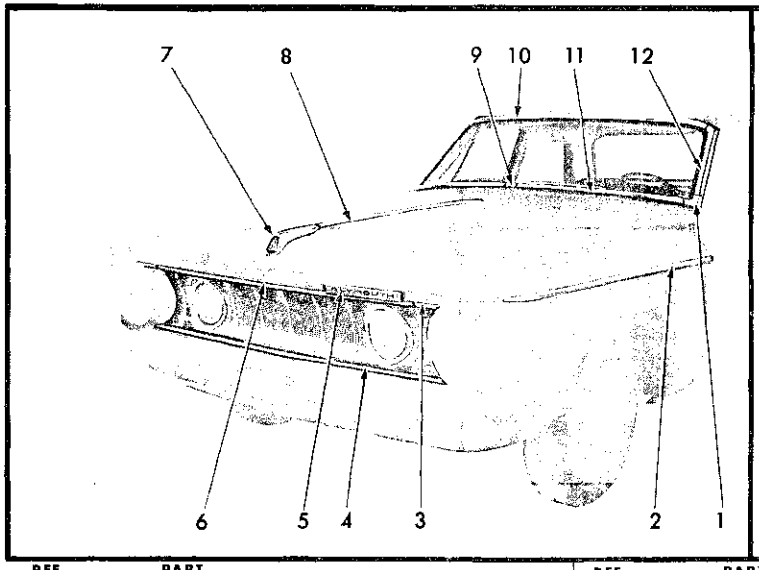

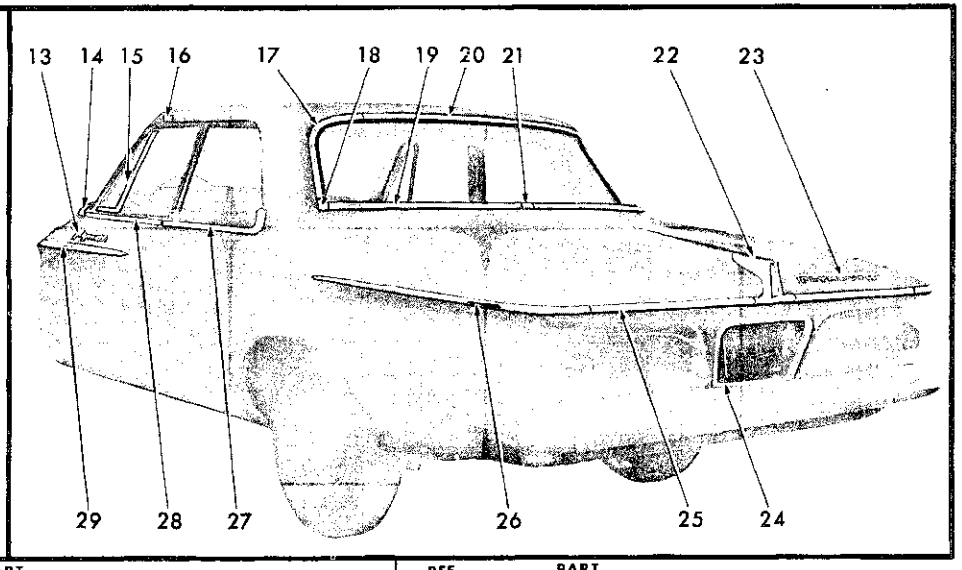

REF. NO.	QTY	PART NUMBER	DESCRIPTION
1	2166	970-1	MOULDING, Windshield Outside Finish Lower End (23-23-65)
2	1	2298 669-70	MOULDING PACKAGE, Fender Side (12-15-2)
	14	6001 017	Clip
	2	6001 231	Clip
	2	6006 438	Nut
3	1	2298 661-2	MOULDING PACKAGE, Hood Extension (12-15-2)
	4	125 978	Screw
4	1	2298 658-9	MOULDING PACKAGE, Radiator Stone Deflector (7-35-20)
	8	6001 257	Clip
5	1	2099 410	NAME PLATE, Hood Front (15-06-3)
	3	6006 264	Nut
6	1	2298 664	MOULDING PACKAGE, Hood Front (15-25-2)
	6	6001 229	Clip
	6	271 472	Nut
7	1	2099 418	ORNAMENT, w/Medallion, Hood Top (15-03-18)
	2	120 375	Nut
	1	6023 076	Stud, Long
	1	6024 084	Stud, Short
8	1	2298 660	MOULDING PACKAGE, Hood Top (15-25-2)
	7	6001 031	Clip
	1	271 472	Nut
9	1	2254 524	COVER, Windshield Outside Finish Lower Moulding Joint (23-23-66)
10	1	2298 552	MOULDING PACKAGE, Windshield Outside Finish Upper (23-23-65)
	8	6000 966	Retainer
11	1	2298 571-2	MOULDING PACKAGE, Windshield Outside Finish Lower (23-23-65)
	10	6000 966	Retainer
12	1	2166 966-7	MOULDING, Windshield Outside Finish Side (23-23-65)
13	2	2216 067	NAME PLATE, Front Door (23-11-21)
	8	6000 050	Clip
14	1	2298 713-4	MOULDING PACKAGE, Front Door Belt Front (23-23-32)
	2	9416 282	Screw
15	4	2254 031	MOULDING, Front Door Vent Wing Division Channel (23-23-36)
16	2	2166 909	COVER, Roof Side Drain Trough Joint (23-59-57)
17	1	2298 554-5	MOULDING PACKAGE, Rear Window Outside Finish Side (23-23-52)
	6	6000 966	Retainer
18	1	2254 066-7	COVER, Rear Window Outside Finish Side to Lower Moulding Joint (23-23-41)
19	1	2421 206	MOULDING PACKAGE, Rear Window Outside Finish Lower (23-23-52)
	10	6000 966	Retainer
20	1	2298 556	MOULDING PACKAGE, Rear Window Outside Finish Upper (23-23-52)
	5	6000 966	Retainer
21	1	2254 524	COVER, Rear Window Outside Finish Lower Moulding Joint (23-23-41)
22	1	2254 092	ORNAMENT and MEDALLION, Deck Lid (23-19-114)
	1	6000 987	Retainer
	2	---- ---	Nut
23	1	2216 092	"P", Deck Lid Letter (23-19-114)
	1	6013 114	Nut
	1	2216 093	"L"
	1	6013 114	Nut
	1	2216 094	"Y"
	1	6013 114	Nut
	1	2216 095	"M"
	1	6013 114	Nut
	1	2216 096	"O"
	1	6013 114	Nut
	1	2216 097	"U"
	1	6013 114	Nut
	1	2216 098	"T"
	1	6013 114	Nut
	1	2216 099	"H"
	1	6013 114	Nut
24	1	2254 103	MOULDING, Deck Lower Panel License Depression (23-23-23)
	4	---- ---	Nut
25	1	2275 939-40	MOULDING PACKAGE, Deck Lid (23-23-30)
	8	---- ---	Washer
	8	6001 020	Clip
	8	441 256	Nut
26	1	2275 941	MOULDING PACKAGE, Quarter Panel Lower, Right (23-23-39)
	1	2298 727	MOULDING PACKAGE, Quarter Panel Lower, Left (23-23-39)
	10	6001 017	Clip
	8	6000 709	Clip
	8	151 497	Nut
27	1	2298 709-10	MOULDING PACKAGE, Rear Door Belt (23-23-33)
	10	6001 031	Clip
28	1	2298 702-3	MOULDING PACKAGE, Front Door Belt Rear (23-23-32)
	12	6001 031	Clip
29	2	2275 942	MOULDING PACKAGE, Front Door Lower (23-23-32)
	10	6001 033	Clip

All Packages Include Attaching Parts

Part Type Code is Indicated in Parentheses **19x9253B**

MOULDINGS - PLYMOUTH SAVOY SP1-2(L) 4 DOOR SEDAN

MyMopar.com

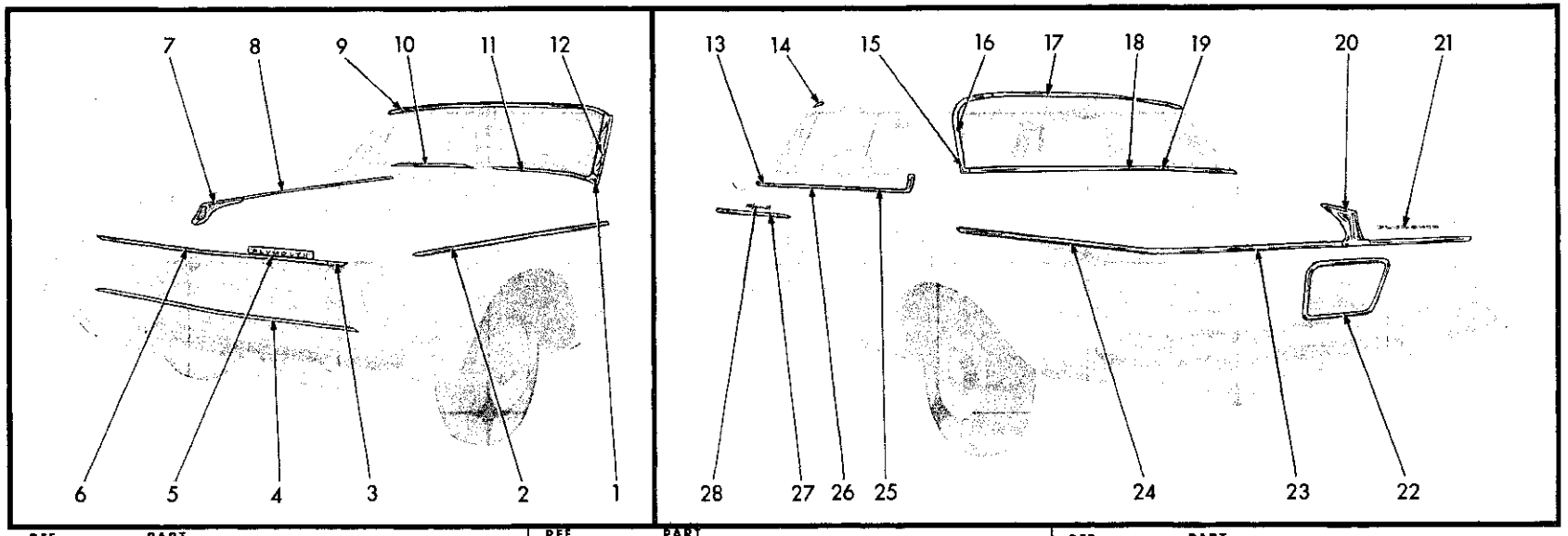

REF. NO.	QTY	PART NUMBER	DESCRIPTION
1	1	2166 970-1	MOULDING, Windshield Outside Finish Lower End (23-23-65)
2	1	2298 669-70	MOULDING PACKAGE, Fender Side (12-15-2)
	14	6000 972	Clip
	2	6001 231	Clip
	2	6006 438	Nut
3	1	2298 661-2	MOULDING PACKAGE, Fender Hood Extension (12-15-2)
	4	125 978	Screw
4	1	2298 658-9	MOULDING PACKAGE, Radiator Stone Deflector (7-35-20)
	8	6001 257	Clip
5	1	2099 410	NAME PLATE, Hood (15-06-3)
	3	6006 264	Nut
6	1	2298 664	MOULDING PACKAGE, Hood Front (15-25-2)
	6	6000 617	Clip
	6	116 000	Nut
7	1	2099 418	ORNAMENT, w/Medallion, Hood Top, SP-L (15-03-18)
	1	2099 421	SP-M, SP-H (15-03-18)
	2	120 375	Nut
	1	6023 076	Stud, Long
	1	6024 084	Stud, Short
8	1	2298 660	MOULDING PACKAGE, Hood Top (15-25-2)
	1	271 472	Nut
	7	6001 031	Clip
9	1	2298 552	MOULDING PACKAGE, Windshield Outside Finish Upper (23-23-65)
	8	6000 966	Retainer
10	1	2254 524	COVER, Windshield Outside Finish Lower Moulding Joint (23-23-66)
11	1	2298 571-2	MOULDING PACKAGE, Windshield Outside Finish Lower (23-23-65)

All Packages Include Attaching Parts

REF. NO.	QTY	PART NUMBER	DESCRIPTION
	10	6000 966	Retainer
12	1	2166 966-7	MOULDING, Windshield Outside Finish Side (23-23-65)
13	1	2298 713-4	MOULDING PACKAGE, Door Belt Front (23-23-32)
	2	9416 282	Screw
14	2	2166 909	COVER, Roof Drain Trough Joint (23-59-57)
15	1	2254 066-7	COVER, Rear Window Outside Finish Side to Lower Mldg. Joint (23-23-41)
16	1	2298 554-5	MOULDING PACKAGE, Rear Window Outside Finish Side (23-23-52)
	6	6000 966	Retainer
17	1	2298 556	MOULDING PACKAGE, Rear Window Outside Finish Upper (23-23-52)
	5	6000 966	Retainer
18	1	2421 206	MOULDING PACKAGE, Rear Window Outside Finish Lower (23-23-52)
	10	6000 966	Retainer
19	1	2254 524	COVER, Rear Window Outside Finish Lower Moulding Joint (23-23-41)
20	1	2254 092	ORNAMENT and MEDALLION, Deck Lid (23-19-114)
	1	6000 987	Retainer
	2	---- ---	Nut
21	1	2216 092	"P", Deck Lid Name Letter (23-19-114)
	2	6013 114	Nut
	1	2216 093	"L"
	2	6013 114	Nut
	1	2216 094	"Y"
	2	6013 114	Nut
	1	2216 095	"M"
	2	6013 114	Nut
	1	2216 096	"O"

REF. NO.	QTY	PART NUMBER	DESCRIPTION
	2	6013 114	Nut
	1	2216 097	"U"
	2	6013 114	Nut
	1	2216 098	"T"
	2	6013 114	Nut
	1	2216 099	"H"
	2	6013 114	Nut
22	1	2254 103	MOULDING, Deck Lower Panel License Insert (23-23-23)
	2	6001 011	Clip
	4	6000 709	Clip
	4	---- ---	Nut
23	1	2275 939-40	MOULDING PACKAGE, Deck Lid (23-23-30)
	8	6001 020	Clip
	8	---- ---	Washer
	8	441 256	Nut
24	1	2275 941	MOULDING PACKAGE, Quarter Panel, Right (23-23-39)
	1	2298 727	MOULDING PACKAGE, Quarter Panel, Left (23-23-39)
	10	6001 017	Clip
	8	6000 709	Clip
	8	151 497	Nut
25	1	2298 711-2	MOULDING PACKAGE, Quarter Panel Belt (23-23-39)
	8	6001 031	Clip
26	2	2298 704	MOULDING PACKAGE, Door Belt Rear (23-23-32)
	14	6001 031	Clip
27	2	2275 942	MOULDING PACKAGE, Door (23-23-32)
	10	6001 033	Clip
28	2	2216 067	NAME PLATE, Door (23-11-21)
	8	6000 050	Clip

Part Type Code is Indicated in Parentheses **19x9245C**

MOULDINGS - PLYMOUTH SAVOY SP1-2(L) CLUB SEDAN

MyMopar.com

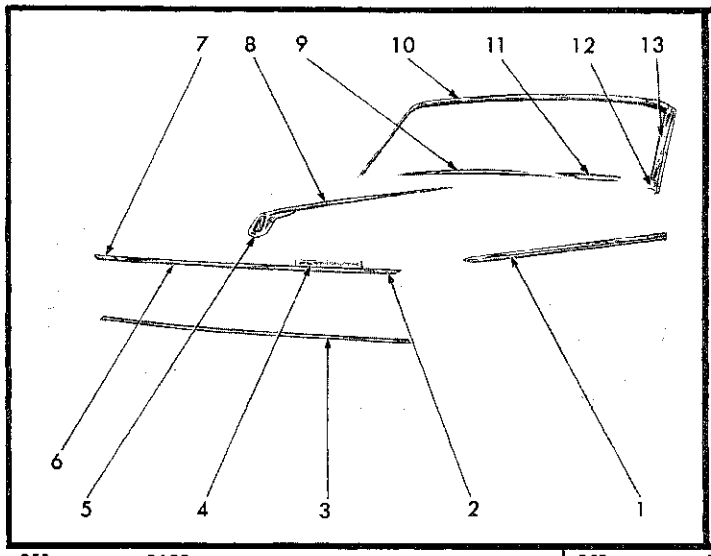

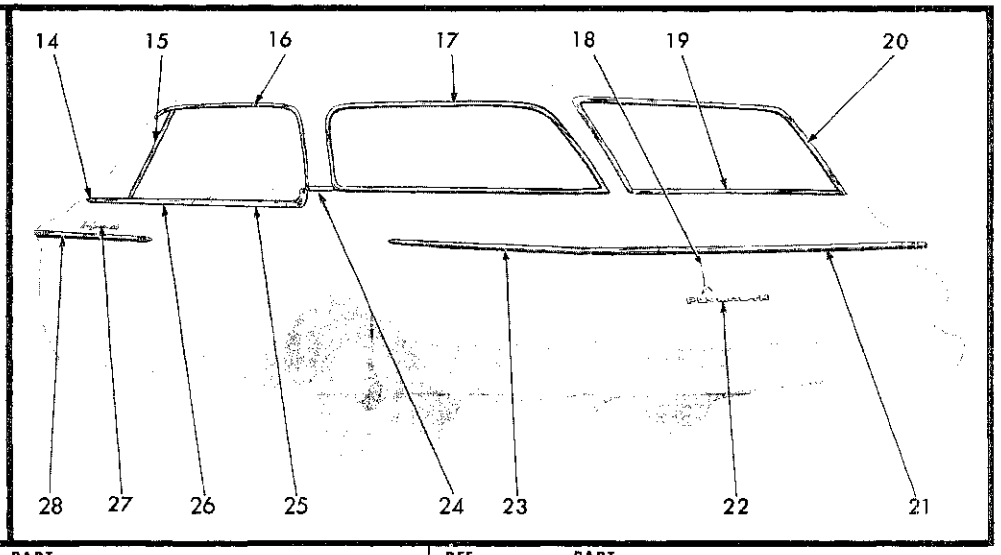

REF. NO.	QTY	PART NUMBER	DESCRIPTION
1	1	2298 669-70	MOULDING PACKAGE, Front Fender Side (12-15-2)
	14	6000 972	Clip and Seal
	2	6001 231	Clip
	2	6006 438	Nut and Seal
2	1	2298 661-2	MOULDING PACKAGE, Front Fender Hood Extension (12-15-2)
	4	125 978	Screw
3	1	2298 658-9	MOULDING, Radiator Stone Deflector (7-35-20)
	8	6001 257	Clip
	3	120 375	Nut
	3	6022 506	Screw
4	1	2099 410	NAME PLATE, Hood Front (15-06-3)
	3	6006 264	Nut
5	1	2099 418	ORNAMENT, w/Medallion, Hood Top, SP-L (15-03-18)
	1	2099 421	ORNAMENT, w/Medallion, Hood Top, SP-M, SP-H (15-03-18)
	2	120 375	Nut
	1	6023 076	Stud, Long
	1	6024 084	Stud, Short
6	1	2298 664	MOULDING PACKAGE, Hood Front (15-25-2)
7	1	2298 661-2	MOULDING PACKAGE, Front Fender Hood Extension (12-15-2)
	4	125 978	Screw
8	1	2298 660	MOULDING PACKAGE, Hood Top (15-25-2)
9	1	2254 524	COVER, Windshield Outside Finish Lower Moulding Joint (23-23-66)
10	1	2298 552	MOULDING PACKAGE, Windshield Outside Finish Upper (23-23-65)
	8	6000 966	Retainer

All Packages Include Attaching Parts

REF. NO.	QTY	PART NUMBER	DESCRIPTION
11	1	2298 571-2	MOULDING PACKAGE, Windshield Outside Finish Lower (23-23-65)
	10	6000 966	Retainer
12	1	2166 970-1	MOULDING, Windshield Outside Finish Lower End (23-23-65)
13	1	2166 966-7	MOULDING, Windshield Outside Finish Side (23-23-65)
14	1	2298 713-4	MOULDING PACKAGE, Front Door Belt Front (23-23-32)
	2	9416 282	Screw
15	4	2254 031	MOULDING, Front Door Vent Wing Division Channel (23-23-36)
16	2	2166 909	COVER, Roof Side Drain Trough (23-59-57)
17	2	2255 027	LOCKINGSTRIP, Quarter Window Glass Weatherstrip, Rubber (23-63-110)
	1	2254 918-9	LOCKINGSTRIP, Quarter Window Glass Weatherstrip, Mylar (23-63-110)
18	1	2254 722	ORNAMENT, Tailgate Outside Panel (23-54-11)
	2	1839 995	Nut
19	1	2275 995	MOULDING PACKAGE, Tailgate Outside Finish Belt (23-23-61)
	2	125 978	Screw
	7	6001 232	Clip
20	1	2251 802-3	MOULDING, Tailgate Opening Outside Finish Rear Upper Pillar (23-23-60)
21	1	2275 949	MOULDING PACKAGE, Tailgate Outside Finish Outside Panel (23-23-61)
	5	6001 033	Clip
	2	6001 020	Clip
22	1	2216 092	LETTER "P", Tailgate (23-54-11)
	1	6013 114	Nut
	1	2216 093	LETTER "L", Tailgate (23-54-11)
	1	6013 114	Nut

REF. NO.	QTY	PART NUMBER	DESCRIPTION
	2	151 497	Nut
	1	2216 094	LETTER "Y", Tailgate (23-54-11)
	1	6013 114	Nut
	1	2216 095	LETTER "M", Tailgate (23-54-11)
	1	6013 114	Nut
	1	2216 096	LETTER "O", Tailgate (23-54-11)
	1	6013 114	Nut
	1	2216 097	LETTER "U", Tailgate (23-54-11)
	1	6013 114	Nut
	1	2216 098	LETTER "T", Tailgate (23-54-11)
	1	6013 114	Nut
	1	2216 099	LETTER "H", Tailgate (23-54-11)
	1	6013 114	Nut
23	1	2275 302-3	MOULDING PACKAGE, Quarter Panel (23-23-39)
	16	120 375	Clip
	2	6010 093	Clip
	2	151 497	Nut
24	1	2299 374	MOULDING PACKAGE, Quarter Panel Belt, Right (23-23-39)
	1	2299 399	MOULDING PACKAGE, Quarter Panel Belt, Left (23-23-39)
	4	6001 031	Clip
25	1	2298 709-10	MOULDING PACKAGE, Rear Door Belt (23-23-33)
	10	6001 031	Clip
26	1	2298 702-3	MOULDING PACKAGE, Front Door Belt Rear (23-23-32)
	12	6001 031	Clip
27	2	2216 067	NAME PLATE, Front Door (23-11-21)
	8	6000 050	Clip
28	2	2275 942	MOULDING PACKAGE, Front Door Lower (23-23-32)
	10	6001 033	Clip

Part Type Code is Indicated in Parentheses **19x9185B**

MOULDINGS - PLYMOUTH SAVOY SP1-2(L) SUBURBAN

MyMopar.com

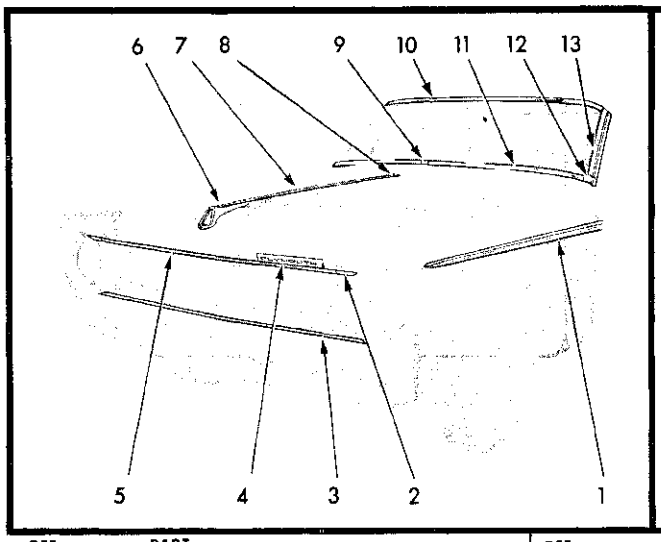

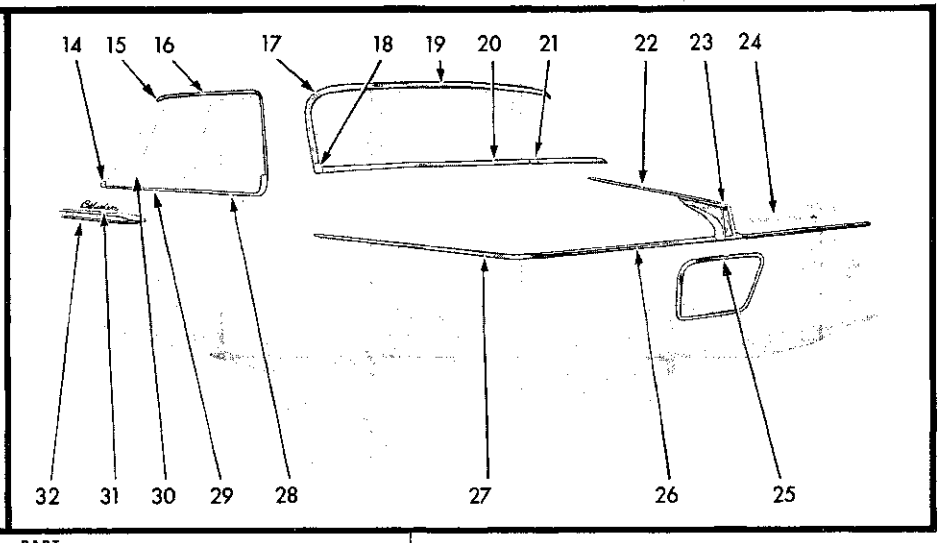

REF. NO.	QTY	PART NUMBER	DESCRIPTION
1	1	2298 671-2	MOULDING PACKAGE, Fender Side (12-15-2)
	14	6000 991	Clip
	2	6001 233	Clip
	2	6006 438	Nut
2	1	2298 661-2	MOULDING PACKAGE, Fender Hood Extension (12-15-2)
	4	125 978	Screw
3	1	2298 658-9	MOULDING PACKAGE, Radiator Stone Deflector (7-35-20)
	8	6001 257	Clip
4	1	2099 410	NAME PLATE, Hood (15-06-3)
5	1	2298 664	MOULDING PACKAGE, Hood Front (15-25-2)
	6	6000 617	Clip
	6	116 000	Nut
6	1	2099 421	ORNAMENT, w/Medallion, Hood (15-03-18)
7	1	2298 660	MOULDING PACKAGE, Hood Top (15-25-2)
	7	6001 031	Clip
	1	271 472	Nut
8	1	2298 663	CAP PACKAGE, Hood Top Moulding Rear (15-25-2)
	1	6006 264	Nut
9	1	2254 524	COVER, Windshield Outside Finish Lower Mldg. Joint (23-23-66)
10	1	2298 552	MOULDING PACKAGE, Windshield Outside Finish Upper (23-23-65)
	8	6000 966	Retainer
11	1	2298 571-2	MOULDING PACKAGE, Windshield Outside Finish Lower (23-23-65)
	10	6000 966	Retainer
12	1	2166 970-1	MOULDING, Windshield Outside Finish Lower End (23-23-65)
13	1	2166 966-7	MOULDING, Windshield Outside Finish Side (23-23-65)

All Packages Include Attaching Parts

REF. NO.	QTY	PART NUMBER	DESCRIPTION
14	1	2298 713-4	MOULDING PACKAGE, Front Door Belt Front (23-23-32)
	2	9416 282	Screw
15	1	2254 314-5	CAP, Roof Side Drain Trough Moulding Front End (23-59-57)
16	1	2216 090-1	MOULDING, Roof Side Drain Trough (23-59-61)
17	1	2298 554-5	MOULDING PACKAGE, Rear Window Outside Finish Side (23-23-52)
	6	6000 966	Retainer
18	1	2254 066-7	COVER, Rear Window Outside Finish Side to Lower Moulding Joint (23-23-41)
19	1	2298 556	MOULDING PACKAGE, Rear Window Outside Finish Upper (23-23-52)
	5	6000 966	Retainer
20	1	2421 206	MOULDING PACKAGE, Rear Window Outside Finish Lower (23-23-52)
	10	6000 966	Retainer
21	1	2254 524	COVER, Rear Window Outside Finish Lower Moulding Joint (23-23-41)
22	1	2275 938	MOULDING PACKAGE, Deck Lid Upper (23-23-30)
	4	6000 987	Retainer
	4	---- ---	Nut
23	1	2254 091	ORNAMENT and MEDALLION, Deck Lid (23-19-114)
	1	6000 987	Retainer
	2	---- ---	Nut
24	1	2216 092	"P", Deck Lid Letter (23-19-114)
	1	6013 114	Nut
	1	2216 093	"L"
	1	6013 114	Nut
	1	2216 094	"Y"
	1	6013 114	Nut
	1	2216 095	"M"
	1	6013 114	Nut
	1	2216 096	"O"
	1	6013 114	Nut

REF. NO.	QTY	PART NUMBER	DESCRIPTION
	1	2216 097	"U"
	1	6013 114	Nut
	1	2216 098	"T"
	1	6013 114	Nut
	1	2216 099	"H"
	1	6013 114	Nut
25	1	2254 103	MOULDING, Deck Lower Panel License Depression (23-23-23)
	4	---- ---	Nut
26	1	2275 939-40	MOULDING PACKAGE, Deck Lid Lower (23-23-30)
	8	---- ---	Washer
	8	6001 020	Clip
	8	441 256	Nut
27	1	2275 941	MOULDING PACKAGE, Quarter Panel, Right (23-23-39)
	1	2298 727	MOULDING PACKAGE, Quarter Panel, Left (23-23-39)
	10	6001 017	Clip
	8	6000 709	Clip
	8	151 497	Nut
28	1	2298 709-10	MOULDING PACKAGE, Rear Door Belt (23-23-33)
	10	6001 031	Clip
29	1	2298 702-3	MOULDING PACKAGE, Front Door Belt Rear (23-23-32)
	12	6001 031	Clip
30	4	2254 031	MOULDING, Front Door Vent Wing Division Channel (23-23-36)
31	2	2216 066	NAME PLATE, Front Door (23-11-21)
	8	6000 050	Clip
32	1	2298 715-6	MOULDING PACKAGE, Front Door Lower (23-23-32)
	8	6000 991	Clip
	2	6000 974	Clip

Part Type Code is Indicated in Parentheses **19x9275B**

MOULDINGS - PLYMOUTH BELVEDERE SP1-2(M) 4 DOOR SEDAN

MyMopar.com

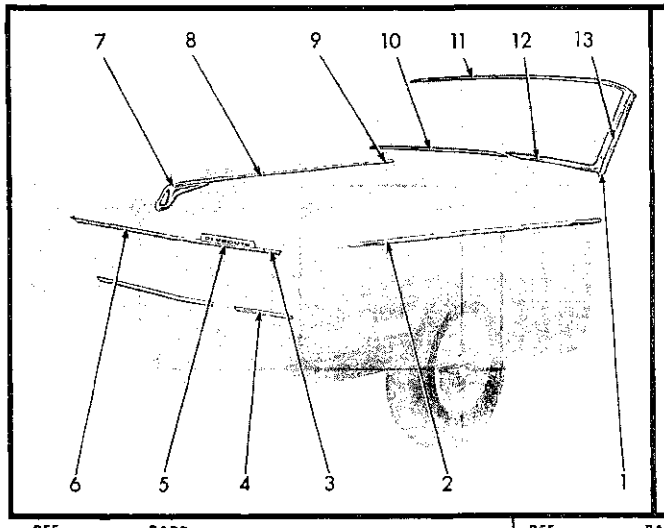

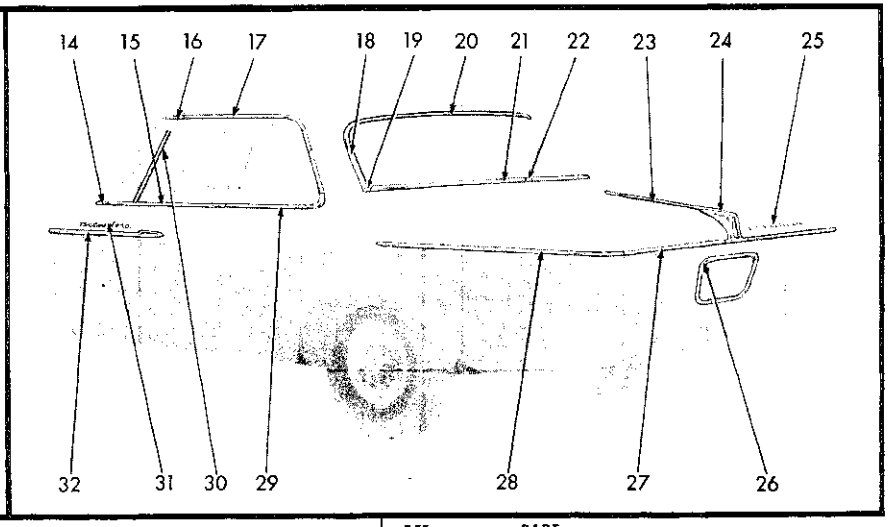

REF. NO.	QTY	PART NUMBER	DESCRIPTION
1	1	2166 970-1	MOULDING, Windshield Outside Finish Lower End (23-23-65)
2	1	2298 671-2	MOULDING PACKAGE, Fender Side (12-15-2)
	14	6000 991	Clip
	2	6001 233	Clip
	2	6006 438	Nut
3	1	2298 661-2	MOULDING PACKAGE, Fender Hood Extension (12-15-2)
	4	125 978	Screw
4	1	2298 658-9	MOULDING PACKAGE, Radiator Stone Deflector (7-35-20)
	8	6001 257	Clip
5	1	2099 410	NAME PLATE, Hood Front (15-06-3)
	3	6006 264	Nut
6	1	2298 664	MOULDING PACKAGE, Hood Front (15-25-2)
	6	6000 617	Clip
	6	116 000	Nut
7	1	2099 421	ORNAMENT, w/Medallion, Hood, SP2-M, (15-03-18)
	2	120 375	Nut
	1	6023 076	Stud, Long
	1	6024 084	Stud, Short
8	1	2298 660	MOULDING PACKAGE, Hood Top (15-25-2)
	7	6001 031	Clip
	1	271 472	Nut
9	1	2298 663	CAP PACKAGE, Hood Top Moulding Rear (15-25-2)
	1	6006 264	Nut
10	1	2254 524	COVER, Windshield Outside Finish Lower Moulding Joint (23-23-66)
11	1	2298 552	MOULDING PACKAGE, Windshield Outside Finish Upper (23-23-65)
	8	6000 966	Retainer
12	1	2298 571-2	MOULDING PACKAGE, Windshield Outside Finish Lower (23-23-65)
	10	6000 966	Retainer

All Packages Include Attaching Parts

REF. NO.	QTY	PART NUMBER	DESCRIPTION
13	1	2166 966-7	MOULDING, Windshield Outside Finish Side (23-23-65)
14	1	2298 713-4	MOULDING PACKAGE, Door Belt Front (23-23-32)
	2	9416 282	Screw
15	2	2298 704	MOULDING PACKAGE, Door Belt Rear (23-23-32)
	14	6001 031	Clip
16	1	2254 314-5	CAP, Roof Side Drain Trough Moulding Front End (23-59-57)
17	1	2216 090-1	MOULDING, Roof Side Drain Trough (23-59-61)
18	1	2298 554-5	MOULDING PACKAGE, Rear Window Outside Finish Side (23-23-52)
	6	6000 966	Retainer
19	1	2254 066-7	COVER, Rear Window Outside Finish Side to Lower Mldg. Joint (23-23-41)
20	1	2298 556	MOULDING PACKAGE, Rear Window Outside Finish Upper (23-23-52)
	5	6000 966	Retainer
21	1	2421 206	MOULDING PACKAGE, Rear Window Outside Finish Lower (23-23-52)
	10	6000 966	Retainer
22	1	2254 524	COVER, Rear Window Outside Finish Lower Mldg. Joint (23-23-41)
23	1	2275 938	MOULDING PACKAGE, Deck Lid Top (23-23-30)
	2	6000 987	Retainer
	2	---- ---	Nut
24	1	2254 091	ORNAMENT and MEDALLION, Deck Lid (23-19-114)
	1	6000 987	Retainer
	2	---- ---	Nut
25	1	2216 092	"P", Deck Lid Name Letter (23-19-114)
	2	6013 114	Nut
	1	2216 093	"L"
	2	6013 114	Nut
	1	2216 094	"Y"

REF. NO.	QTY	PART NUMBER	DESCRIPTION
	2	6013 114	Nut
	1	2216 095	"M"
	2	6013 114	Nut
	1	2216 096	"O"
	2	6013 114	Nut
	1	2216 097	"U"
	2	6013 114	Nut
	1	2216 098	"T"
	2	6013 114	Nut
	1	2216 099	"H"
	2	6013 114	Nut
26	1	2254 103	MOULDING, Deck Lower Panel License Insert (23-23-23)
	2	6001 011	Clip
	4	6000 709	Clip
	4	---- ---	Nut
27	1	2275 939-40	MOULDING PACKAGE, Deck Lid Lower (23-23-30)
	8	6001 020	Clip
	8	---- ---	Washer
	8	441 256	Nut
28	1	2275 941	MOULDING PACKAGE, Quarter Panel Lower, Right (23-23-39)
	1	2298 727	MOULDING PACKAGE, Quarter Panel Lower, Left (23-23-39)
	10	6001 017	Clip
	8	6000 709	Clip
	8	151 497	Nut
29	1	2298 711-2	MOULDING PACKAGE, Quarter Panel Belt (23-23-39)
	8	6001 031	Clip
30	4	2254 031	MOULDING, Door Vent Wing Division Channel (23-23-36)
31	2	2216 066	NAME PLATE, Door (23-11-21)
	8	6000 050	Clip
32	1	2298 715-6	MOULDING PACKAGE, Door Lower (23-23-32)
	8	6000 991	Clip
	2	6000 974	Clip

Part Type Code is Indicated in Parentheses **19x9243C**

MOULDINGS - PLYMOUTH BELVEDERE SP1-2(M) CLUB SEDAN

MyMopar.com

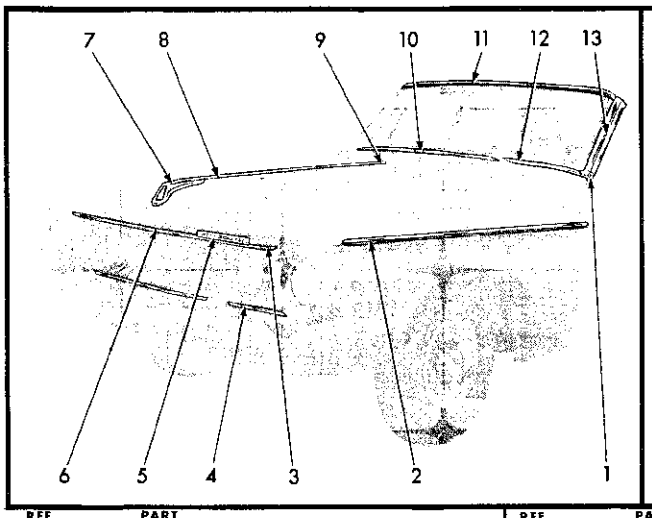

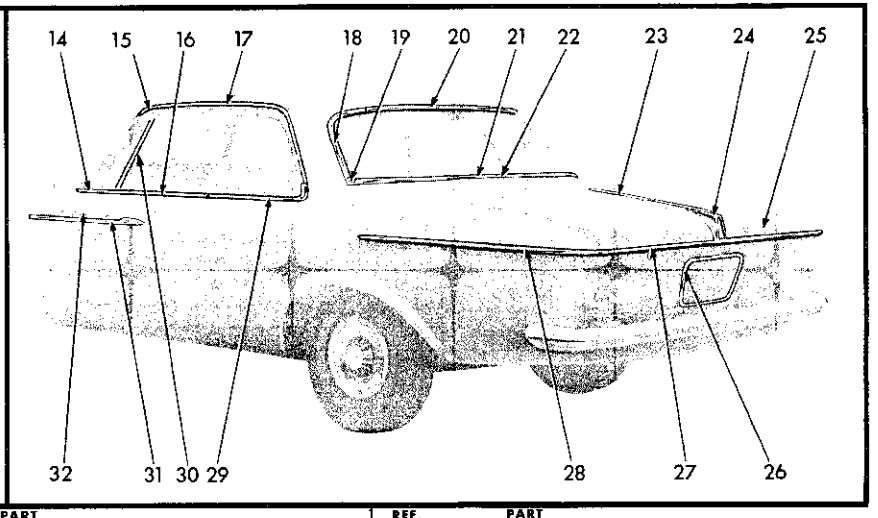

REF. NO.	QTY	PART NUMBER	DESCRIPTION
1	1	2166 970-1	MOULDING, Windshield Outside Finish Lower End (23-23-65)
2	1	2298 671-2	MOULDING PACKAGE, Fender Side (12-15-2)
	14	6000 991	Clip
	2	6001 233	Clip
	2	6006 438	Nut
3	1	2298 661-2	MOULDING PACKAGE, Fender Hood Extension (12-15-2)
	4	125 978	Screw
4	1	2298 658-9	MOULDING PACKAGE, Radiator Stone Deflector (7-35-20)
	8	6001 257	Clip
5	1	2099 410	NAME PLATE, Hood Front (15-06-3)
	3	6006 264	Nut
6	1	2298 664	MOULDING PACKAGE, Hood Front (15-25-2)
	6	6000 617	Clip
	6	116 000	Nut
7	1	2099 421	ORNAMENT, w/Insert, Hood Top (15-03-18)
	2	120 375	Nut
	1	6023 076	Stud, Long
	1	6024 084	Stud, Short
8	1	2298 660	MOULDING PACKAGE, Hood Top (15-25-2)
	7	6001 031	Clip
	1	271 472	Nut
9	1	2298 663	CAP PACKAGE, Hood Top Moulding Rear (15-25-2)
	1	6006 264	Nut
10	1	2254 524	COVER, Windshield Outside Finish Lower Mldg. Joint (23-23-66)
11	1	2298 552	MOULDING PACKAGE, Windshield Outside Finish Upper (23-23-65)
	8	6000 966	Retainer
12	1	2298 571-2	MOULDING PACKAGE, Windshield Outside Finish Lower (23-23-65)
	10	6000 966	Retainer
13	1	2166 966-7	MOULDING, Windshield Outside Finish Side (23-23-65)
14	1	2298 713-4	MOULDING PACKAGE, Door Belt Front (23-23-32)
	2	9416 282	Screw
15	1	2254 314-5	CAP, Roof Side Drain Trough Moulding Front End (23-59-57)
16	2	2298 704	MOULDING PACKAGE, Door Belt Rear (23-23-32)
	14	6001 031	Clip
17	1	2216 090-1	MOULDING, Roof Side Drain Trough (23-59-61)
18	1	2298 554-5	MOULDING PACKAGE, Rear Window Outside Finish Side (23-23-52)
	6	6000 966	Retainer
19	1	2254 066-7	COVER, Rear Window Outside Finish Side to Lower Mldg. Joint (23-23-41)
20	1	2298 556	MOULDING PACKAGE, Rear Window Outside Finish Upper (23-23-52)
	5	6000 966	Retainer
21	1	2421 206	MOULDING PACKAGE, Rear Window Outside Finish Lower (23-23-52)
	10	6000 966	Retainer
22	1	2254 524	COVER, Rear Window Outside Finish Lower Mldg. Joint (23-23-41)
23	1	2275 938	MOULDING PACKAGE, Deck Lid Top (23-23-30)
	2	6000 987	Retainer
	2	---- ---	Nut
24	1	2254 091	ORNAMENT and MEDALLION, Deck Lid (23-19-114)
	1	6000 987	Retainer
	2	---- ---	Nut
25	1	2216 092	"P", Deck Lid Name Letter (23-19-114)
	2	6013 114	Nut
	1	2216 093	"L"
	2	6013 114	Nut
	1	2216 094	"Y"
	2	6013 114	Nut
	1	2216 095	"M"
	2	6013 114	Nut
	1	2216 096	"O"
	2	6013 114	Nut
	1	2216 097	"U"
	2	6013 114	Nut
	1	2216 098	"T"
	2	6013 114	Nut
	1	2216 099	"H"
	2	6013 114	Nut
26	1	2254 103	MOULDING, Deck Lower Panel License Insert (23-23-23)
	2	6001 011	Clip
	4	6000 709	Clip
	4	---- ---	Nut
27	1	2275 939-40	MOULDING PACKAGE, Deck Lid Lower (23-23-30)
	8	6001 020	Clip
	8	---- ---	Washer
	8	441 256	Nut
28	1	2275 941	MOULDING PACKAGE, Quarter Panel Lower Right (23-23-39)
	1	2298 727	MOULDING PACKAGE, Quarter Panel Lower Left (23-23-39)
	10	6001 017	Clip
	8	6000 709	Clip
	8	151 497	Nut
29	1	2298 711-2	MOULDING PACKAGE, Quarter Panel Belt (23-23-39)
	8	6001 031	Clip
30	4	2254 031	MOULDING, Door Vent Wing Division Channel (23-23-36)
31	1	2298 715-6	MOULDING PACKAGE, Door Lower (23-23-32)
	8	6000 991	Clip
	2	6000 974	Clip
32	2	2216 066	NAME PLATE, Door (23-23-21)
	8	6000 050	Clip

All Packages Include Attaching Parts

Part Type Code is Indicated in Parentheses **19x9244C**

MOULDINGS - PLYMOUTH BELVEDERE SP1-2(M) SPECIAL CLUB COUPE

MyMopar.com

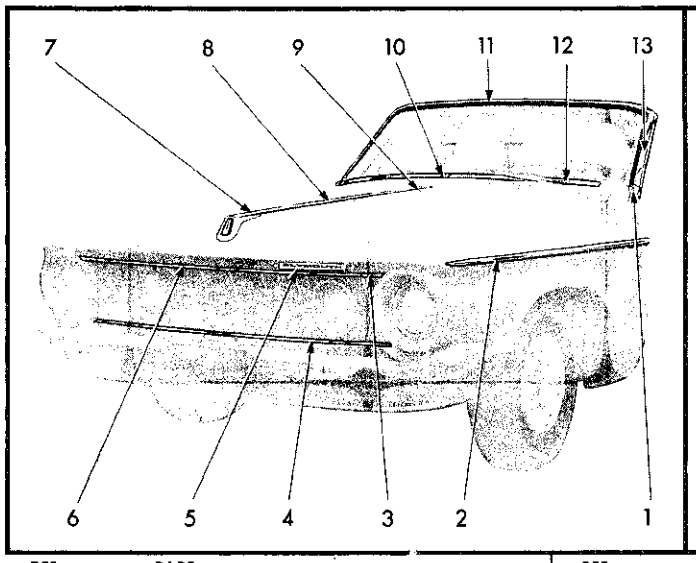

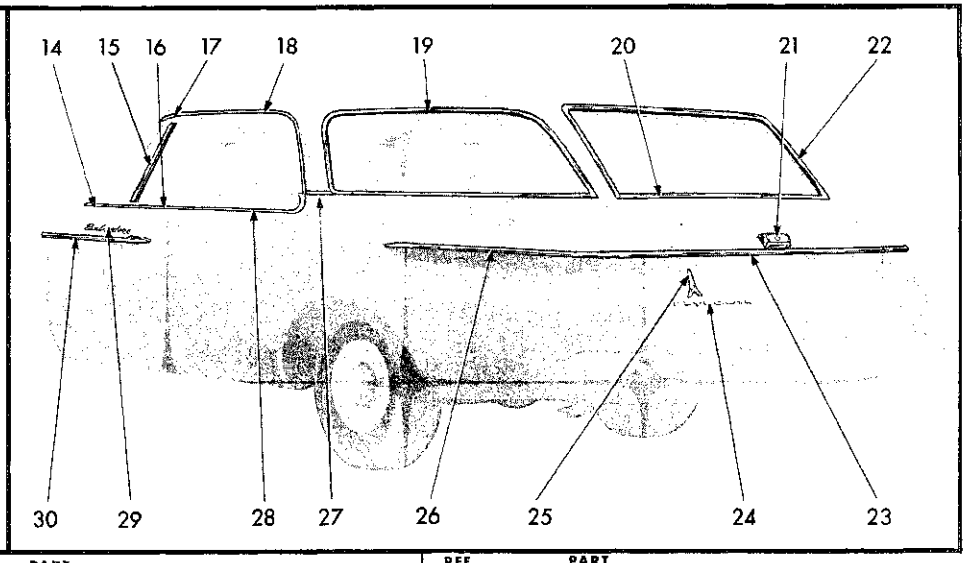

REF. NO.	QTY	PART NUMBER	DESCRIPTION
1	1	2166 970-1	MOULDING, Windshield Outside Finish Lower End (23-23-65)
2	1	2298 671-2	MOULDING PACKAGE, Fender Side (12-15-2)
	14	6000 991	Clip
	2	6001 233	Clip
	2	6006 438	Nut
3	1	2298 661-2	MOULDING PACKAGE, Fender Hood Extension (12-15-2)
	4	125 978	Screw
4	1	2298 658-9	MOULDING PACKAGE, Radiator Stone Deflector (7-35-20)
	8	6001 257	Clip
5	1	2099 410	NAME PLATE, Hood Front (15-06-3)
	3	6006 264	Nut
6	1	2298 664	MOULDING PACKAGE, Hood Front (15-25-2)
	6	6000 617	Clip
	6	116 300	Nut
7	1	2099 421	ORNAMENT, w/Medallion, Hood, SP2-M, (15-03-18)
	2	120 375	Nut
	1	6023 076	Stud, Long
	1	6024 084	Stud, Short
8	1	2298 660	MOULDING PACKAGE, Hood Top (15-25-2)
	7	6001 031	Clip
	1	271 472	Nut
9	1	2298 663	CAP PACKAGE, Hood Top Moulding Rear (15-25-2)
	1	6006 264	Nut
10	1	2254 524	COVER, Windshield Outside Finish Lower Moulding Joint (23-23-66)
11	1	2298 552	MOULDING PACKAGE, Windshield Outside Finish Upper (23-23-65)
	8	6000 966	Retainer
12	1	2298 571-2	MOULDING PACKAGE, Windshield Outside Finish Lower (23-23-65)
	10	6000 966	Retainer
13	1	2166 966-7	MOULDING, Windshield Outside Finish Side (23-23-65)
14	1	2298 713-4	MOULDING PACKAGE, Front Door Belt Front (23-23-32)
	2	9416 282	Screw
15	4	2254 031	MOULDING, Door Vent Wing Divisional Channel (23-23-36)
16	1	2298 702-3	MOULDING PACKAGE, Front Door Belt Rear (23-23-32)
	12	6001 071	Clip
17	1	2254 314-5	CAP, Roof Side Drain Trough Moulding Front End (23-59-57)
18	1	2216 090-1	MOULDING, Roof Side Drain Trough (23-59-61)
19	1	2254 918-9	LOCKINGSTRIP, Quarter Window Glass Weatherstrip (23-63-110) Mylar
20	1	2275 995	MOULDING PACKAGE, Tailgate Outside Panel Belt (23-23-61)
	2	125 978	Screw
	7	6001 232	Clip
21	1	2251 373	ORNAMENT, Tailgate Electric Window Lift (23-54-11)
22	1	2251 802-3	MOULDING, Tailgate Opening Rear Upper Pillar Outside Finish (23-23-60)
23	1	2275 949	MOULDING PACKAGE, Tailgate Outside Panel (23-23-61)
	5	6001 033	Clip
	2	6001 020	Clip
	2	151 497	Nut
24	1	2216 092	"P", Tailgate Letter (23-54-11)
	1	1839 995	Nut
	1	2216 093	"L", Tailgate Letter (23-54-11)
	1	1839 995	Nut
	1	2216 094	"Y", Tailgate Letter (23-54-11)
	1	1839 995	Nut
	1	2216 095	"M", Tailgate Letter (23-54-11)
	1	1839 995	Nut
	1	2216 096	"O", Tailgate Letter (23-54-11)
	1	1839 995	Nut
	1	2216 097	"U", Tailgate Letter (23-54-11)
	1	1839 995	Nut
	1	2216 098	"T", Tailgate Letter (23-54-11)
	1	1839 995	Nut
	1	2216 099	"H", Tailgate Letter (23-54-11)
	1	1839 995	Nut
25	1	2254 722	ORNAMENT, Tailgate Outside Panel (23-54-11)
	2	1839 995	Nut
26	1	2275 302-3	MOULDING PACKAGE, Quarter Panel (23-23-39)
	16	6000 137	Clip
	2	151 497	Nut
27	1	2299 374	MOULDING PACKAGE, Quarter Panel Belt, Right (23-23-39)
	1	2299 399	MOULDING PACKAGE, Quarter Panel Belt, Left (23-23-39)
	4	6001 031	Clip
28	1	2298 709-10	MOULDING PACKAGE, Rear Door Belt (23-23-33)
	10	6001 071	Clip
29	2	2216 066	NAME PLATE, Front Door (23-11-21)
	8	6000 050	Clip
30	1	2298 715-6	MOULDING PACKAGE, Front Door Lower (23-23-32)
	8	6000 991	Clip
	2	6010 093	Clip
	2	6000 974	Clip

Part Type Code is Indicated in Parentheses **19x9259B**

MOULDINGS - PLYMOUTH BELVEDERE SP1-2(M) SUBURBAN

MyMopar.com

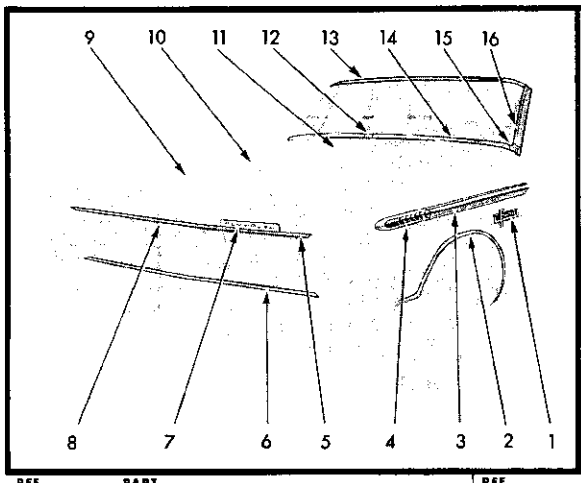

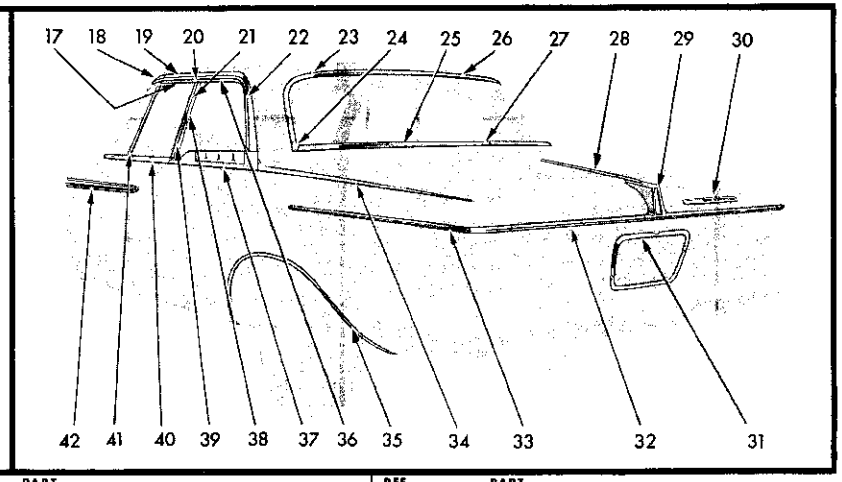

REF. NO.	QTY	PART NUMBER	DESCRIPTION
1	2	2099 464	NAME PLATE, Fender Side (12-15-21)
	4	9415 250	Nut
2	1	2298 673-4	MOULDING PACKAGE, Fender Wheel Opening (12-15-2)
	14	9413 197	Screw
	6	6001 231	Clip
	6	6006 438	Nut
3	1	2298 667-8	MOULDING PACKAGE, Fender Side Rear (12-15-2)
	10	2099 922	Retainer
	2	6000 974	Clip
	10	6001 234	Clip
	10	6006 438	Nut
4	1	2298 665-6	MOULDING PACKAGE, Fender Side Front (12-15-2)
	6	6006 263	Nut
5	1	2298 661-2	MOULDING PACKAGE, Fender Hood Extension (12-15-2)
	4	125 978	Screw
6	1	2298 658-9	MOULDING PACKAGE, Radiator Stone Deflector (7-35-20)
	8	6001 257	Clip
7	1	2099 410	NAME PLATE, Hood Front (15-06-3)
	3	6006 264	Nut
8	1	2298 664	MOULDING PACKAGE, Hood Front (15-25-2)
	6	6000 617	Clip
	6	116 300	Nut
9	1	2099 421	ORNAMENT, w/Medallion, Hood Top (15-03-18)
	2	120 375	Nut
	1	6023 076	Stud, Long
	1	6024 084	Stud, Short
10	1	2298 660	MOULDING PACKAGE, Hood Top (15-25-2)
	7	6001 031	Clip
	1	271 472	Nut
11	1	2298 663	CAP PACKAGE, Hood Top Moulding Rear (15-25-2)
	1	6006 264	Nut
12	1	2254 524	COVER, Windshield Outside Finish Lower Moulding (23-23-66)
13	1	2298 552	MOULDING PACKAGE, Windshield Outside Finish Upper (23-23-65)
	8	6000 966	Retainer
14	1	2298 571-2	MOULDING PACKAGE, Windshield Outside Finish Lower (23-23-65)
	10	6000 966	Retainer
15	1	2166 970-1	MOULDING, Windshield Outside Finish Lower End (23-23-65)
16	1	2166 966-7	MOULDING, Windshield Outside Finish Side (23-23-65)
17	1	2167 996-7	MOULDING, Front Door Window Frame Upper (23-23-32)
18	1	2254 314-5	CAP, Roof Side Drain Trough Moulding Front End (23-59-57)
19	1	2216 090-1	MOULDING, Roof Side Drain Trough (23-59-61)
20	1	2298 565-6	MOULDING PACKAGE, Roof Panel Outside Finish Side Front (23-23-42)
	12	6001 245	Clip
21	1	2216 356-7	PANEL, Center Pillar Upper Finish (23-23-16)
	4	6022 890	Screw
22	1	2298 563-4	MOULDING PACKAGE, Roof Panel Outside Finish Side Rear (23-23-42)
	2	---- ---	Nut & Seal
	4	6001 006	Clip & Seal
23	1	2298 554-5	MOULDING PACKAGE, Rear Window Outside Finish Side (23-23-52)
	6	6000 966	Retainer
24	1	2254 066-7	COVER, Rear Window Outside Finish Side to Lower Mldg. Joint (23-23-41)
25	1	2421 206	MOULDING PACKAGE, Rear Window Outside Finish Lower (23-23-52)
	10	6000 966	Retainer
26	1	2298 556	MOULDING PACKAGE, Rear Window Outside Finish Upper (23-23-52)
	5	6000 966	Retainer
27	1	2254 524	COVER, Rear Window Outside Lower Moulding Joint (23-23-41)
28	1	2275 938	MOULDING PACKAGE, Deck Lid Upper (23-23-30)
	2	6000 987	Retainer
	2	---- ---	Nut
29	1	2254 091	ORNAMENT and MEDALLION, Deck Lid (23-19-114)
	1	6000 987	Retainer
	2	---- ---	Nut
30	1	2254 653	NAME PLATE, Deck Lid (23-19-114)
	4	2254 768	Seal
	4	1839 995	Nut
31	1	2254 103	MOULDING, Deck Lower Panel License Depression (23-23-23)
	4	---- ---	Nut
32	1	2275 939-40	MOULDING PACKAGE, Deck Lid Lower (23-23-30)
	8	---- ---	Washer
	8	6001 020	Clip
	8	441 256	Nut
33	1	2275 941	MOULDING PACKAGE, Quarter Panel Lower, Right (23-23-39)
	1	2298 727	MOULDING PACKAGE, Quarter Panel Lower, Left (23-23-39)
	10	6001 017	Clip
	8	6000 709	Clip
	8	151 497	Nut
34	1	2421 684-5	MOULDING PACKAGE, Quarter Panel Belt Rear (23-23-39)
	6	2254 396	Spacer
	12	---- ---	Seal
	12	6006 264	Nut
	2	6023 574	Screw
35	1	2216 072-3	MOULDING, Quarter Panel Wheel Opening (23-23-39)
	14	9417 316	Screw
36	1	2216 036-7	MOULDING, Rear Door Window Frame Upper (23-23-33)
37	1	2299 410-1	MOULDING PACKAGE, Rear Door Belt (23-23-33)
	8	188 973	Screw
38	1	2167 998-9	MOULDING, Rear Door Window Frame Front (23-23-33)
39	1	2167 998-9	MOULDING, Front Door Window Frame Rear (23-23-32)
40	1	2299 402-3	MOULDING PACKAGE, Front Door Belt (23-23-32)
	8	188 973	Screw
41	4	2254 031	MOULDING, Front Door Vent Wing Division Channel (23-23-36)
42	1	2298 693-4	MOULDING PACKAGE, Front Door Lower (23-33-32)
	10	6000 974	Clip

All Packages Include Attaching Parts

Part Type Code is Indicated in Parentheses **19x9272C**

MOULDINGS - PLYMOUTH FURY SP1-2(H) 4 DOOR SEDAN

MyMopar.com

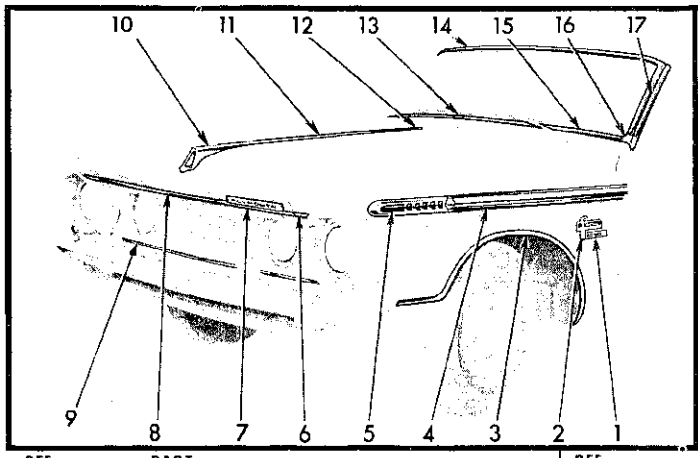

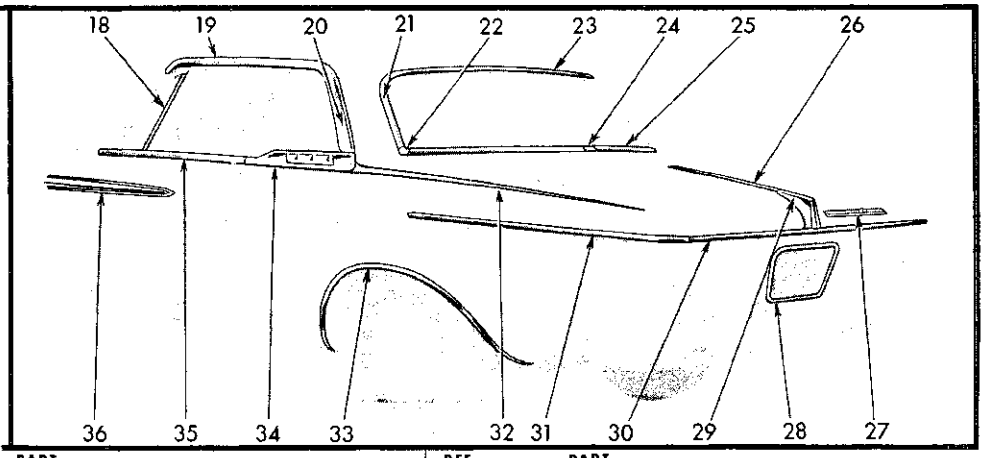

REF. NO.	QTY	PART NUMBER	DESCRIPTION
1	2	2099 696	NAME PLATE, Golden Commando (12-15-21)
	4	6000 752	Clip
2	2	2099 464	NAME PLATE, Fury (12-15-21)
	4	9415 250	Nut
3	1	2298 673-4	MOULDING PACKAGE, Wheelhouse Opening (12-15-2)
	14	9413 197	Screw
	6	6001 231	Clip
	6	6006 438	Nut and Seal
4	1	2298 667-8	MOULDING PACKAGE, Fender Side, Rear (12-15-2)
	10	6000 974	Clip
	5	2099 922	Retainer
	2	6001 234	Clip
	2	6006 438	Nut and Seal
5	1	2298 665-6	MOULDING PACKAGE, Fender Side, Front (12-15-2)
	6	6006 263	Nut and Seal
6	1	2298 661-2	MOULDING PACKAGE, Hood Extension (12-15-2)
	4	125 978	Screw
7	1	2099 410	NAME PLATE, Hood (15-06-3)
	3	6006 264	Nut
8	1	2298 664	MOULDING PACKAGE, Hood Front (15-25-2)
	6	6001 043	Clip
	6	274 750	Nut
9	1	2298 658-9	MOULDING PACKAGE, Radiator Stone Deflector (7-35-20)
	8	6001 240	Clip
10	1	2099 421	ORNAMENT and MEDALLION, Hood (15-03-18)
	2	271 171	Nut
	1	6023 076	Stud, Long
	1	6024 084	Stud, Long
11	2	2298 660	MOULDING PACKAGE, Hood Top (15-25-2)
	2	271 472	Nut
	14	6001 031	Clip
12	1	2298 663	CAP PACKAGE, Hood Moulding, Rear (15-25-2)
	1	6006 264	Nut

All Packages Include Attaching Parts

REF. NO.	QTY	PART NUMBER	DESCRIPTION
13	1	2254 524	COVER, Windshield Outside Finish Lower Moulding Joint (23-23-66)
14	1	2298 552	MOULDING PACKAGE, Windshield Outside Finish Upper (23-23-65)
	8	6000 966	Retainer
15	1	2298 571-2	MOULDING PACKAGE, Windshield Outside Finish Lower (23-23-65)
	10	6000 966	Retainer
16	1	2166 970-1	MOULDING, Windshield Outside Finish Lower End (23-23-65)
17	1	2166 966-7	MOULDING, Windshield Outside Finish Side (23-23-65)
18	4	2254 031	MOULDING, Door Division Channel (23-23-36)
19	1	2216 042-3	MOULDING, Roof Panel Outside Finish Side (23-23-42)
20	1	2216 046-7	MOULDING, Roof Panel Outside Finish Side Rear (23-23-42)
21	1	2298 554-5	MOULDING PACKAGE, Rear Window Outside Finish Side (23-23-52)
	6	6000 966	Retainer
22	1	2254 066-7	COVER, Rear Window Outside Finish Side to Lower Moulding Joint (23-23-41)
23	1	2298 556	MOULDING PACKAGE, Rear Window Outside Finish Upper (23-23-52)
	5	6000 966	Retainer
24	1	2254 524	COVER, Rear Window Outside Finish Lower Moulding Joint (23-23-41)
25	1	2421 206	MOULDING PACKAGE, Rear Window Outside Finish Lower (23-23-52)
	10	6000 966	Retainer
26	1	2275 938	MOULDING PACKAGE, Deck Lid Upper (23-23-30)
	4	6006 459	Retainer
	3	6006 491	Retainer
27	1	2254 653	NAME PLATE, Deck Lid (23-19-114)
	4	2254 768	Seal
	4	1839 995	Nut
28	1	2254 103	MOULDING, Deck Opening Lower Panel License Insert, w/Joint Cover (23-23-23)
	4	6000 709	Clip and Bolt

REF. NO.	QTY	PART NUMBER	DESCRIPTION
	4	---- ---	Nut
	2	6001 011	Clip
29	1	2254 091	ORNAMENT and MEDALLION, Deck Lid (23-19-114)
	1	6000 987	Retainer and Bolt
	2	---- ---	Nut
30	1	2275 939-40	MOULDING PACKAGE, Deck Lid Lower (23-23-30)
	8	6001 020	Clip and Bolt
	8	---- ---	Washer
	8	151 497	Nut
31	1	2275 941	MOULDING PACKAGE, Quarter Panel Lower, Right (23-23-39)
	1	2298 727	MOULDING PACKAGE, Quarter Panel Lower, Left
	10	6000 972	Clip and Seal
	8	6000 709	Clip
	8	151 497	Nut
32	1	2421 684-5	MOULDING PACKAGE, Quarter Panel Belt Rear (23-23-39)
	6	2254 396	Spacer
	12	---- ---	Seal
	12	6006 264	Nut
	2	6023 574	Screw
33	1	2216 072-3	MOULDING, Quarter Panel Wheel Opening (23-23-39)
	28	9417 316	Screw
34	1	2298 642-3	MOULDING PACKAGE, Quarter Panel Belt, w/Retainer (23-23-39)
	2	---- ---	Nut and Seal
35	1	2299 406-7	MOULDING PACKAGE, Door Belt (23-23-32)
	6	6023 574	Screw
36	1	2298 693-4	MOULDING PACKAGE, Door Lower, w/Retainer (23-23-32)
	10	6000 974	Clip

Part Type Code is Indicated in Parentheses **19x9178C**

MOULDINGS - PLYMOUTH FURY SP1-2(H) SPECIAL CLUB COUPE

MyMopar.com

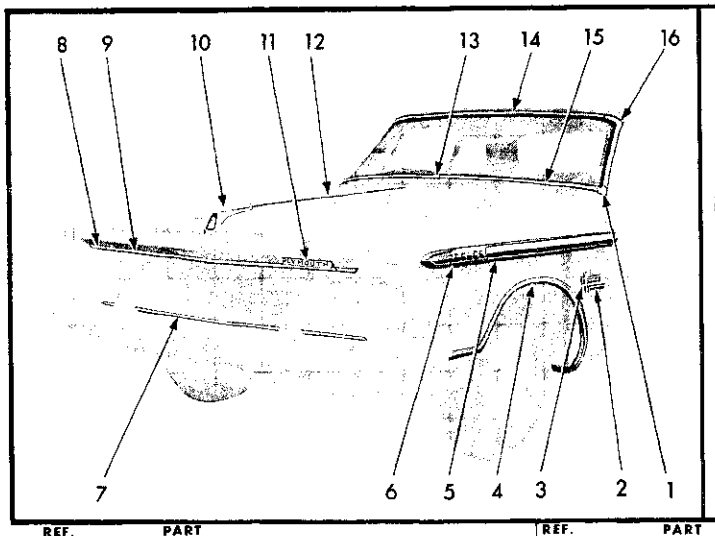

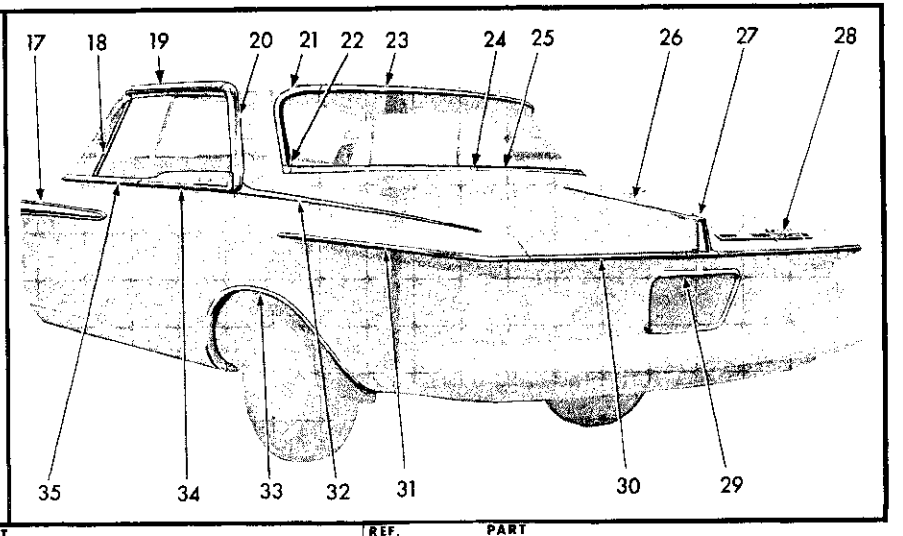

REF. NO.	QTY	PART NUMBER	DESCRIPTION
1	1	2166 970-1	MOULDING, Windshield Outside Finish Lower End (23-23-65)
2	2	2099 696	NAME PLATE, Fender Side (Golden Commando) (12-15-21)
	4	6000 752	Clip
3	2	2099 464	NAME PLATE, Fender Side (Fury) (12-15-21)
	4	9415 250	Nut
4	1	2298 673-4	MOULDING PACKAGE, Fender Wheel Opening (12-15-2)
	14	9413 197	Screw
	6	6001 231	Clip
	6	6006 438	Nut
5	1	2298 667-8	MOULDING PACKAGE, Fender Side Rear (12-15-2)
	10	2099 922	Retainer
	2	6000 974	Clip
	10	6001 234	Clip
	10	6006 438	Nut
6	1	2298 665-6	MOULDING PACKAGE, Fender Side Front (12-15-2)
	6	6006 263	Nut
7	1	2298 658-9	MOULDING PACKAGE, Radiator Stone Deflector (7-35-20)
	8	6001 257	Clip
	3	6022 506	Screw
	3	120 375	Nut
8	1	2298 661-2	MOULDING PACKAGE, Fender Hood Extension (12-15-2)
	4	125 978	Screw
9	1	2298 664	MOULDING PACKAGE, Hood Front (15-25-2)
10	1	2276 642	ORNAMENT, w/Medallion, Hood (15-03-18)
	2	120 375	Nut
	1	6023 076	Stud, Long
	1	6024 084	Stud, Short
11	1	2099 410	NAME PLATE, Hood (15-06-3)
	3	6006 264	Nut
12	1	2298 660	MOULDING PACKAGE, Hood Top (15-25-2)
	7	6001 031	Clip
	1	271 472	Nut

All Packages Include Attaching Parts

REF. NO.	QTY	PART NUMBER	DESCRIPTION
13	1	2254 524	COVER, Windshield Outside Finish Lower Moulding Joint (23-23-66)
14	1	2298 552	MOULDING PACKAGE, Windshield Outside Finish Upper (23-23-65)
	8	6000 966	Retainer
15	1	2298 571-2	MOULDING PACKAGE, Windshield Outside Finish Lower (23-23-65)
	10	6000 966	Retainer
16	1	2166 966-7	MOULDING, Windshield Outside Finish Side (23-23-65)
17	1	2298 693-4	MOULDING PACKAGE, Front Door Lower (23-23-32)
	10	6000 974	Clip
18	4	2254 031	MOULDING, Front Door Vent Wing Division Channel (23-23-36)
19	1	2216 042-3	MOULDING, Roof Panel Outside Finish Side Front (23-23-42)
20	1	2298 567-8	MOULDING PACKAGE, Roof Panel Outside Finish Side Rear (23-23-42)
	6	---- ---	Screw
	2	---- ---	Nut & Seal
21	1	2298 554-5	MOULDING PACKAGE, Rear Window Outside Finish Side (23-23-52)
	6	6000 966	Retainer
22	1	2254 066-7	COVER, Rear Window Outside Finish Side to Lower Moulding (23-23-41)
23	1	2298 556	MOULDING PACKAGE, Rear Window Outside Finish Upper (23-23-52)
	5	6000 966	Retainer
24	1	2254 524	COVER, Rear Window Outside Finish Lower Moulding Joint (23-23-41)
25	1	2421 206	MOULDING PACKAGE, Rear Window Outside Finish Lower (23-23-52)
	10	6000 966	Retainer
26	1	2275 938	MOULDING PACKAGE, Deck Lid Top (23-23-30)
	2	6000 987	Retainer
	2	---- ---	Nut
27	1	2254 091	ORNAMENT and MEDALLION, Deck Lid (23-19-114)
	1	6000 987	Retainer
	2	---- ---	Nut

REF. NO.	QTY	PART NUMBER	DESCRIPTION
28	1	2254 653	NAME PLATE, Deck Lid (23-19-114)
	4	2254 768	Seal
	4	1839 995	Nut
29	1	2254 103	MOULDING, Deck Lower Panel License Insert (23-23-23)
	2	6001 011	Clip
	4	6000 709	Clip
	4	---- ---	Nut
30	1	2275 939-40	MOULDING PACKAGE, Deck Lid Lower (23-23-30)
	8	6001 020	Clip
	8	---- ---	Washer
	8	441 256	Nut
31	1	2275 941	MOULDING PACKAGE, Quarter Panel, Right (23-23-39)
	1	2298 727	MOULDING PACKAGE, Quarter Panel, Left (23-23-39)
	10	6001 017	Clip
	8	6000 709	Clip
	8	151 497	Nut
32	1	2421 684-5	MOULDING PACKAGE, Quarter Panel Belt Rear (23-23-39)
	6	2254 396	Spacer
	12	---- ---	Seal
	12	6006 264	Nut
	2	6023 574	Screw
33	1	2216 072-3	MOULDING, Quarter Panel Wheel Opening (23-23-39)
	14	9417 316	Screw
34	1	2299 412-3	MOULDING PACKAGE, Rear Door Belt (23-23-33)
	8	188 973	Screw
35	1	2299 404-5	MOULDING PACKAGE, Front Door Belt (23-23-32)
	8	6023 574	Screw

Part Type Code is Indicated in Parentheses **19x9254C**

MOULDINGS - PLYMOUTH FURY SP2 SPECIAL 4 DOOR SEDAN

MyMopar.com

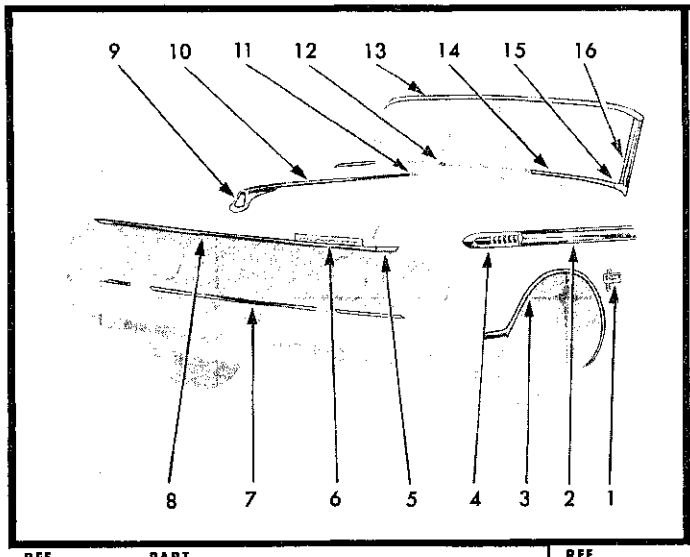

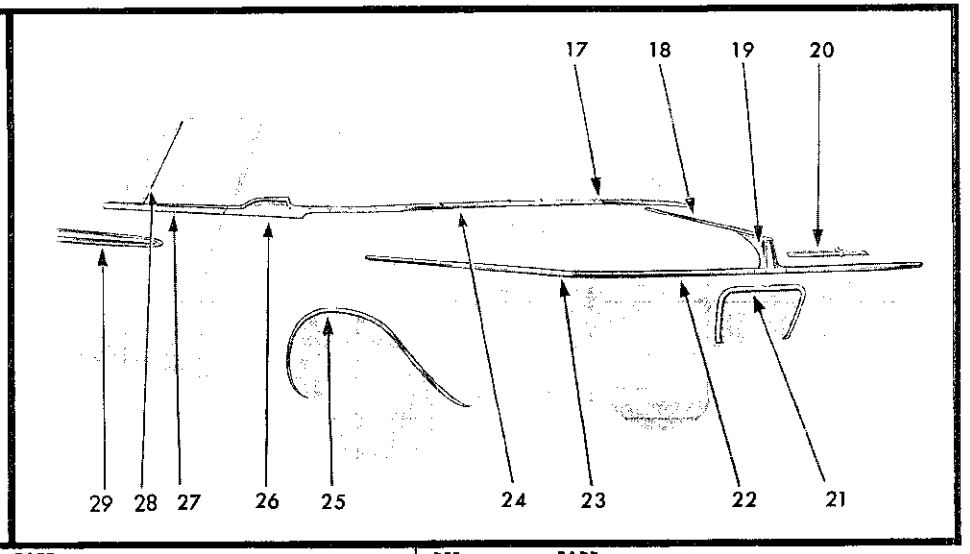

REF. NO.	QTY	PART NUMBER	DESCRIPTION
1	2	2099 464	NAME PLATE, Fender Side (12-15-21)
	4	9415 250	Nut
2	1	2298 667-8	MOULDING PACKAGE, Fender Side Rear (12-15-2)
	10	6000 974	Clip
	2	6001 234	Clip
	10	2099 922	Retainer
	2	6006 438	Nut
3	1	2298 673-4	MOULDING PACKAGE, Fender Wheel Opening (12-15-2)
	14	9413 197	Screw
	6	6001 231	Clip
	6	6006 438	Nut
4	1	2298 665-6	MOULDING PACKAGE, Fender Side Front (12-15-2)
	6	6006 263	Nut
5	1	2298 661-2	MOULDING PACKAGE, Fender Front Hood Extension (12-15-2)
	4	125 978	Screw
6	1	2099 410	NAME PLATE, Hood Front (15-06-3)
	3	6006 264	Nut
7	1	2298 658-9	MOULDING PACKAGE, Radiator Stone Deflector (7-35-20)
	8	6001 257	Clip
8	1	2298 664	MOULDING PACKAGE, Hood Front Lower (15-25-2)
	6	6000 617	Clip
	6	116 000	Nut
	1	2421 221	MOULDING PACKAGE, Hood Front Upper (15-25-2)
	6	6001 043	Clip
	6	274 750	Nut
9	1	2099 421	ORNAMENT, w/Medallion, Hood Top (15-03-18)
	2	120 375	Nut
	1	6023 076	Stud, Long
	1	6024 084	Stud, Short
10	1	2298 660	MOULDING PACKAGE, Hood Top (15-25-2)
	14	6001 031	Clip
11	1	2298 663	CAP PACKAGE, Hood Top Moulding Rear (15-25-2)

All Packages Include Attaching Parts

REF. NO.	QTY	PART NUMBER	DESCRIPTION
12	1	2254 524	COVER, Windshield Outside Finish Lower Moulding Joint (23-23-66)
13	1	2252 056-7	MOULDING and EXTENSION, Windshield Header Outside Finish (23-23-65)
14	1	2298 571-2	MOULDING PACKAGE, Windshield Outside Finish Lower (23-23-65)
	10	6000 966	Retainer
15	1	2166 970-1	MOULDING, Windshield Outside Finish Lower End (23-23-65)
16	1	2166 966-7	MOULDING, Windshield Outside Finish Side (23-23-65)
17	1	2251 635	CAP, Quarter Panel Belt Moulding Center (23-23-41)
	1	2189 748	Retainer
	1	2094 394	Stud
18	1	2275 938	MOULDING PACKAGE, Deck Lid Top (23-23-30)
	2	6000 987	Retainer
	2	---- ---	Nut
19	1	2254 091	ORNAMENT and MEDALLION, Deck Lid (23-19-114)
	1	6000 987	Retainer
	2	---- ---	Nut
20	1	2254 653	NAME PLATE, Deck Lid (23-19-114)
	4	2254 768	Seal
	4	1839 995	Nut
21	1	2254 103	MOULDING, Deck Opening Lower Panel License Insert (23-23-23)
	4	6000 709	Clip
	4	---- ---	Nut
	2	6001 011	Clip
22	1	2275 939-40	MOULDING PACKAGE, Deck Lid Lower (23-23-30)
	8	6001 020	Clip
	8	---- ---	Washer
	8	441 256	Nut

REF. NO.	QTY	PART NUMBER	DESCRIPTION
23	1	2275 941	MOULDING PACKAGE, Quarter Panel Lower, Right (23-23-39)
	1	2298 727	MOULDING PACKAGE, Quarter Panel Lower, Left (23-23-39)
	10	6001 033	Clip
	8	6000 709	Clip
	8	151 497	Nut
24	1	2251 638-9	MOULDING, Quarter Panel Belt Rear (23-23-39)
	2	2254 452	Retainer
	2	2254 794	Retainer
	1	2189 852-3	Retainer
	2	2094 394	Stud
	10	125 978	Screw
	4	6001 004	Nut
25	1	2216 072-3	MOULDING, Quarter Panel Wheel Opening (23-23-39)
	14	9417 316	Screw
26	1	2299 408-9	MOULDING PACKAGE, Quarter Panel Belt Front (23-23-39)
	6	188 973	Screw
27	1	2299 406-7	MOULDING PACKAGE, Door Belt (23-23-32)
	8	6023 574	Screw
28	4	2254 031	MOULDING, Door Vent Wing Division Channel (23-23-36)
29	1	2298 693-4	MOULDING PACKAGE, Door Lower (23-23-32)
	10	6000 974	Clip

Part Type Code is Indicated in Parentheses **19x9203C**

MOULDINGS - PLYMOUTH FURY SP2(H) CONVERTIBLE COUPE

MyMopar.com

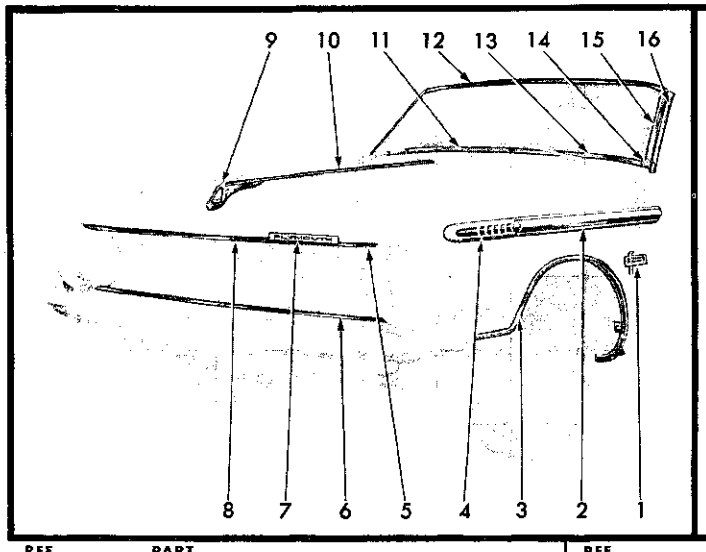

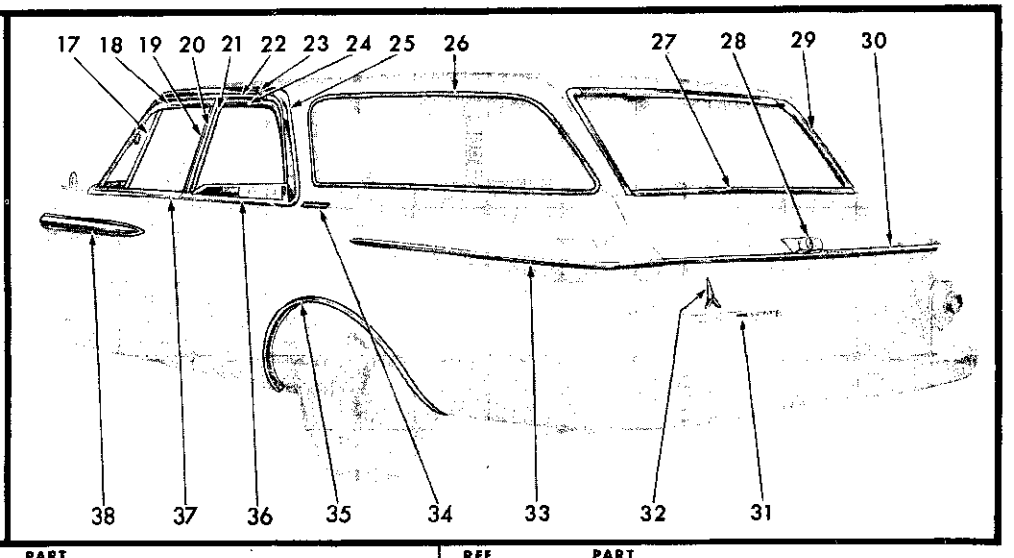

REF. NO.	QTY	PART NUMBER	DESCRIPTION
1	2	2099 464	NAME PLATE, Fender Side (12-15-21)
	4	9415 250	Nut
2	1	2298 667-8	MOULDING PACKAGE, Fender Side Rear (12-15-2)
	10	6000 974	Clip
	10	2099 922	Retainer
3	1	2298 673-4	MOULDING PACKAGE, Fender Wheel Opening (12-15-2)
	14	9413 197	Screw
	6	6001 231	Clip
4	1	2298 665-6	MOULDING PACKAGE, Fender Side Front (12-15-2)
	6	6006 263	Nut
5	1	2298 661-2	MOULDING PACKAGE, Fender Hood Extension (12-15-2)
	4	125 978	Screw
6	1	2298 658-9	MOULDING PACKAGE, Radiator Stone Deflector (7-35-20)
	8	6001 257	Clip
7	1	2099 410	NAME PLATE, Hood (15-06-3)
	3	6006 264	Nut
8	1	2298 664	MOULDING PACKAGE, Hood Front Lower (15-25-2)
	6	6000 617	Clip
	1	2421 221	MOULDING PACKAGE, Hood Front Upper (15-25-2)
	6	6001 043	Clip
9	1	2099 421	ORNAMENT, w/Insert, Hood Top (15-03-18)
	2	120 375	Nut
	1	6023 076	Stud, Long
	1	6024 084	Stud, Short
10	1	2298 660	MOULDING PACKAGE, Hood Top (15-25-2)
	7	6001 031	Clip
11	1	2254 524	COVER, Windshield Outside Finish Lower Moulding Joint (23-23-66)

2	6001 234	Clip
2	6006 438	Nut
6	6006 438	Nut
6	116 000	Nut
6	274 750	Nut
1	271 472	Nut

REF. NO.	QTY	PART NUMBER	DESCRIPTION
12	1	2298 552	MOULDING PACKAGE, Windshield Outside Finish Upper (23-23-65)
	8	6000 966	Retainer
13	1	2298 571-2	MOULDING PACKAGE, Windshield Outside Finish Lower (23-23-65)
	10	6000 966	Retainer
14	1	2166 970-1	MOULDING, Windshield Outside Finish Lower End (23-23-65)
15	1	2166 966-7	MOULDING, Windshield Outside Finish Side (23-23-65)
16	1	2254 314-5	CAP, Roof Side Drain Trough Moulding Frt. End (23-59-57)
17	4	2254 031	MOULDING, Front Door Vent Wing Division Channel (23-23-36)
18	1	2167 996-7	MOULDING, Front Door Frame Upper (23-23-32)
19	1	2167 998-9	MOULDING, Front Door Frame Rear (23-23-32)
20	1	2216 356-7	PANEL, Center Pillar Upper Finish (23-23-16)
	4	6022 890	Screw
21	1	2167 998-9	MOULDING, Rear Door Frame Front (23-23-33)
22	1	2216 090-1	MOULDING, Roof Side Drain Trough (23-59-61)
23	1	2298 565-6	MOULDING PACKAGE, Roof Panel Outside Finish Side Front (23-23-42)
	12	6001 245	Clip
24	1	2216 036-7	MOULDING, Rear Door Frame Upper (23-23-33)
25	1	2298 563-4	MOULDING PACKAGE, Roof Panel Outside Finish Side Rear (23-23-42)
	2	---- ---	Retainer
	2	---- ---	Nut and Seal
	4	6001 006	Clip and Seal
26	1	2254 918-9	LOCKINGSTRIP, Quarter Window Glass Weatherstrip Mylar (23-63-110)
27	1	2275 995	MOULDING PACKAGE, Tailgate Outside Finish Belt (23-23-61)
	2	125 978	Screw
	7	6001 232	Clip

REF. NO.	QTY	PART NUMBER	DESCRIPTION
28	1	2251 373	ORNAMENT, Tailgate Electric Window Lift (23-54-11)
29	1	2196 608-9	MOULDINGPACKAGE, Tailgate Opening Outside Finish Rear Upper Pillar (23-23-60)
	*	6006 451	Clip
30	1	2275 949	MOULDING PACKAGE, Tailgate Outside Panel (23-23-61)
	5	6001 033	Clip
	2	6001 020	Clip
	2	151 497	Nut
31	1	2254 653	NAME PLATE, Tailgate Fury (23-54-11)
	3	1839 995	Nut
32	1	2254 722	ORNAMENT, Tailgate Outside Panel(23-54-11)
	2	1839 995	Nut
33	1	2275 302-3	MOULDING PACKAGE, Quarter Panel (23-23-39)
34	1	2299 400-1	MOULDING PACKAGE, Quarter Panel Belt (23-23-39)
	4	6001 031	Clip
35	1	2275 334-5	MOULDING, Quarter Panel Wheel Opening (23-23-39)
	16	---- ---	Screw
36	1	2299 410-1	MOULDING PACKAGE, Rear Door Belt (23-23-33)
	8	188 973	Screw
37	1	2299 402-3	MOULDING PACKAGE, Front Door Belt (23-23-32)
	8	188 973	Screw
38	1	2298 693-4	MOULDING PACKAGE, Front Door Lower (23-23-32)
	10	6000 974	Clip

All Packages Include Attaching Parts

Part Type Code is Indicated in Parentheses **19x9208C**

MOULDINGS - PLYMOUTH FURY SP2(H) SUBURBAN

MyMopar.com

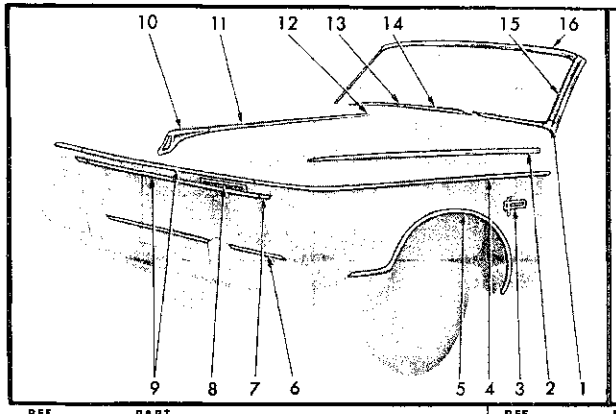

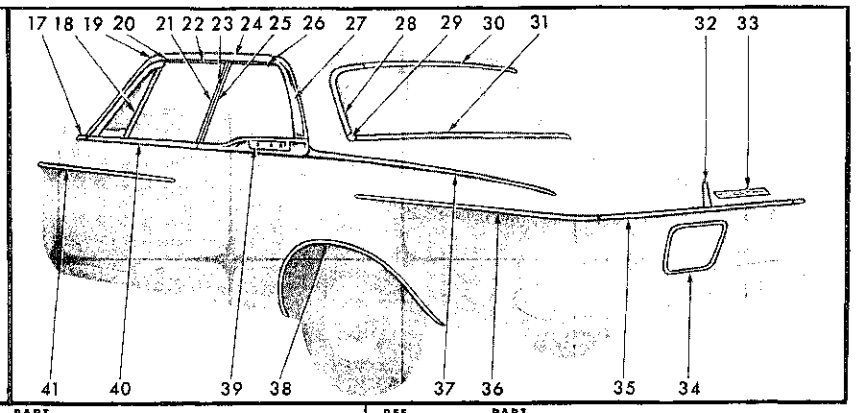

REF. NO.	QTY	PART NUMBER	DESCRIPTION
1	1	2166 970-1	MOULDING, Windshield Outside Finish Lower End (23-23-65)
2	1	2421 688-9	MOULDING PACKAGE, Fender Side Upper (12-15-2)
	2	6000 960	Clip
	12	2254 396	Spacer
	12	6006 263	Nut
3	2	2099 464	NAME PLATE, Fender Side (12-15-21)
	4	9415 250	Nut
4	1	2421 222-3	MOULDING PACKAGE, Fender Front and Side (12-15-2)
	14	6001 033	Clip
	4	6001 043	Clip
	2	6001 020	Clip
	4	9415 250	Nut
	2	116 000	Nut
5	1	2298 673-4	MOULDING PACKAGE, Wheel Opening (12-15-2)
	14	9413 197	Screw
	6	6001 231	Clip
	6	6006 438	Nut
6	1	2298 658-9	MOULDING PACKAGE, Radiator Stone Deflector (7-35-20)
	8	6001 240	Clip
7	1	2298 661-2	MOULDING PACKAGE, Hood Extension (12-15-2)
	4	9413 197	Screw
8	1	2099 410	NAME PLATE, Hood Front (15-06-3)
	3	6006 264	Nut
9	1	2421 221	MOULDING PACKAGE, Hood Front Upper (15-25-2)
	6	6001 043	Clip
	6	9415 250	Nut
	1	2298 664	MOULDING PACKAGE, Hood Front Lower (15-25-2)
	6	6000 617	Clip
	6	116 000	Nut
10	1	2099 421	ORNAMENT, w/Medallion, Hood Top (15-03-18)
	2	120 375	Nut
	1	6023 076	Stud, Long
	1	6024 084	Stud, Short
11	1	2298 660	MOULDING PACKAGE, Hood Top (15-25-2)
	14	6001 031	Clip
12	1	2298 663	CAP PACKAGE, Hood Top Moulding Rear (15-25-2)
	1	6006 264	Nut

All Packages Include Attaching Parts

REF. NO.	QTY	PART NUMBER	DESCRIPTION
13	1	2254 524	COVER, Windshield Outside Finish Lower Moulding (23-23-66)
14	1	2298 571-2	MOULDING PACKAGE, Windshield Outside Finish Lower (23-23-65)
	10	6000 966	Retainer
15	1	2166 966-7	MOULDING, Windshield Outside Finish Side (23-23-65)
16	1	2298 552	MOULDING PACKAGE, Windshield Outside Finish Upper (23-23-65)
	8	6000 966	Retainer
17	1	2421 931-2	MOULDING PACKAGE, Front Door Belt Front (23-23-32)
	2	9417 273	Screw
	2	2254 396	Spacer
	2	6006 264	Nut
18	4	2254 031	MOULDING, Front Door Vent Wing Division Channel (23-23-36)
19	1	2254 314-5	CAP, Roof Side Drain Trough Moulding Front End (23-59-57)
20	1	2216 090-1	MOULDING, Roof Side Drain Trough (23-59-61)
21	1	2167 998-9	MOULDING, Front Door Window Frame Rear (23-23-32)
22	1	2167 996-7	MOULDING, Front Door Window Frame Upper (23-23-32)
23	1	2216 356-7	PANEL, Center Pillar Upper Finish (23-23-16)
	4	6022 890	Screw
24	1	2298 565-6	MOULDING PACKAGE, Roof Panel Outside Finish Side Front (23-23-42)
	12	6001 245	Clip
25	1	2167 998-9	MOULDING, Rear Door Window Frame Front (23-23-33)
26	1	2216 036-7	MOULDING, Rear Door Window Frame Upper (23-23-33)
27	1	2298 563-4	MOULDING PACKAGE, Roof Panel Outside Finish Side Rear (23-23-42)
	2	---- ---	Nut and Seal
	4	6001 006	Clip and Seal
28	1	2298 554-5	MOULDING PACKAGE, Rear Window Outside Finish Side (23-23-32)
	6	6000 966	Retainer
29	1	2254 066-7	COVER, Rear Window Outside Finish Side to Lower Moulding Joint (23-23-41)
30	1	2298 556	MOULDING PACKAGE, Rear Window Outside Finish Upper (23-23-52)
	5	6000 966	Retainer
31	1	2421 206	MOULDING PACKAGE, Rear Window Outside Finish Lower (23-23-52)
	10	6000 966	Retainer

REF. NO.	QTY	PART NUMBER	DESCRIPTION
32	1	2254 092	ORNAMENT and MEDALLION, Deck Lid (23-19-114)
	1	6000 987	Retainer
	2	---- ---	Nut
33	1	2254 653	NAME PLATE, Deck Lid (23-19-114)
	4	2254 768	Seal
	4	1839 995	Nut
34	1	2254 103	MOULDING, Deck Opening Lower Panel License Insert (23-23-23)
	4	6000 709	Clip
	4	---- ---	Nut
	2	6001 011	Clip
35	2	2275 939	MOULDING PACKAGE, Deck Lid Lower (23-23-30)
	8	6001 020	Clip
	8	---- ---	Washer
	8	441 256	Nut
36	1	2275 941	MOULDING PACKAGE, Quarter Panel Lower Right (23-23-39)
	1	2298 727	MOULDING PACKAGE, Quarter Panel Lower Left (23-23-39)
	10	6001 033	Clip
	8	6000 709	Clip
	8	151 497	Nut
37	1	2421 684-5	MOULDING PACKAGE, Quarter Panel Upper (23-23-39)
	6	2254 396	Spacer
	12	6022 005	Seal
	12	6006 264	Nut
38	1	2216 072-3	MOULDING, Quarter Panel Wheel Opening (23-23-39)
	14	9417 316	Screw
39	1	2299 410-1	MOULDING PACKAGE, Rear Door Belt (23-23-33)
	8	188 973	Screw
40	1	2421 915-6	MOULDING PACKAGE, Front Door Belt Rear (23-23-32)
	16	6023 574	Screw
41	2	2275 942	MOULDING PACKAGE, Front Door Lower (23-23-32)
	10	6001 033	Clip

Part Type Code is Indicated in Parentheses **19x9431A**

MOULDINGS (LATE TYPE) - PLYMOUTH FURY SP1-2(H) 4 DOOR SEDAN

MyMopar.com

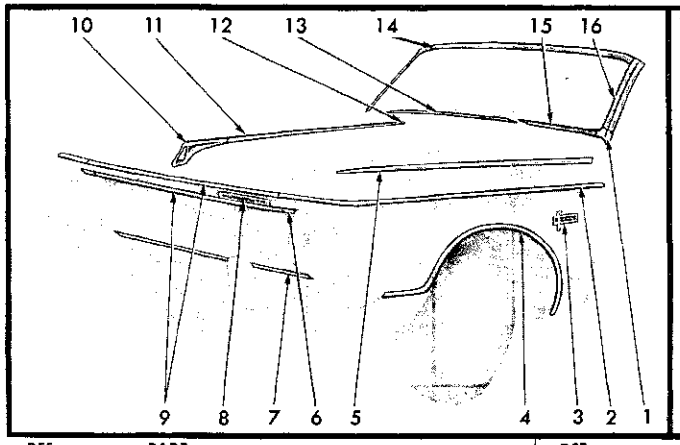

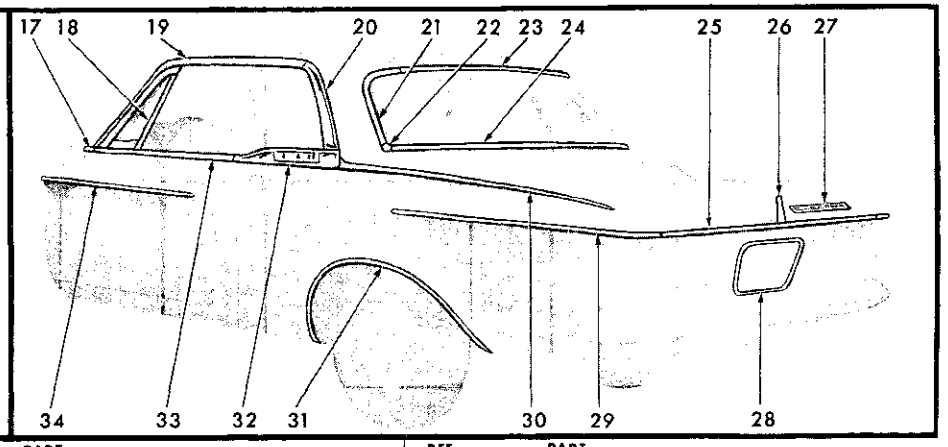

REF. NO.	QTY	PART NUMBER	DESCRIPTION
1	1	2166 970-1	MOULDING, Windshield Outside Finish Lower End (23-23-65)
2	1	2421 222-3	MOULDING PACKAGE, Fender Front and Side (12-15-2)
	14	6001 033	Clip
	4	6001 043	Clip
	2	6001 020	Clip
	4	9415 250	Nut
	2	116 000	Nut
3	2	2099 464	NAME PLATE, Fender Side (12-15-21)
	4	9415 250	Nut
4	1	2298 673-4	MOULDING PACKAGE, Wheel Opening (12-15-2)
	14	9413 197	Screw
	6	6001 231	Clip
	6	6006 438	Nut
5	1	2421 688-9	MOULDING PACKAGE, Fender Side Upper (12-15-2)
	2	6000 960	Clip
	12	2254 396	Spacer
	12	6006 263	Nut
6	1	2298 661-2	MOULDING PACKAGE, Hood Extension (12-15-2)
	4	9413 197	Screw
7	1	2298 658-9	MOULDING PACKAGE, Radiator Stone Deflector (7-35-20)
	8	6001 257	Clip
8	1	2099 410	NAME PLATE, Hood Front (15-06-3)
	3	6006 264	Nut
9	1	2421 221	MOULDING PACKAGE, Hood Front Upper (15-25-2)
	6	6001 043	Clip
	6	9415 250	Nut
	1	2298 664	MOULDING PACKAGE, Hood Front Lower (15-25-2)
	6	6000 617	Clip
	6	116 000	Nut
10	1	2099 421	ORNAMENT, w/Medallion, Hood Top (15-03-18)
	2	120 375	Nut
	1	6023 076	Stud, Long
	1	6024 084	Stud, Short

All Packages Include Attaching Parts

REF. NO.	QTY	PART NUMBER	DESCRIPTION
11	1	2298 660	MOULDING PACKAGE, Hood Top (15-25-2)
	14	6001 031	Clip
12	1	2298 663	CAP PACKAGE, Hood Top Moulding Rear (15-25-2)
	1	6006 264	Nut
13	1	2254 524	COVER, Windshield Outside Finish Lower Moulding Joint (23-23-66)
14	1	2298 552	MOULDING PACKAGE, Windshield Outside Finish Upper (23-23-65)
	8	6000 966	Retainer
15	1	2298 571-2	MOULDING PACKAGE, Windshield Outside Finish Lower (23-23-65)
	10	6000 966	Retainer
16	1	2166 966-7	MOULDING, Windshield Outside Finish Side (23-23-65)
17	1	2421 931-2	MOULDING PACKAGE, Door Belt Front (23-23-32)
	2	9417 273	Screw
	2	2254 396	Spacer
	2	6006 264	Nut
18	4	2254 031	MOULDING, Door Vent Wing Division Channel (23-23-36)
19	1	2216 042-3	MOULDING, Roof Panel Outside Finish Side (23-23-42)
20	1	2216 046-7	MOULDING, Roof Panel Outside Finish Side Rear (23-23-42)
21	1	2298 554-5	MOULDING PACKAGE, Rear Window Outside Finish Side (23-23-52)
	6	6000 966	Retainer
22	1	2254 066-7	COVER, Rear Window Outside Finish Side to Lower Moulding Joint (23-23-41)
23	1	2298 556	MOULDING PACKAGE, Rear Window Outside Finish Upper (23-23-52)
	5	6000 966	Retainer
24	1	2421 206	MOULDING PACKAGE, Rear Window Outside Finish Lower (23-23-52)
	10	6000 966	Retainer
25	2	2275 939	MOULDING PACKAGE, Deck Lid Lower (23-23-30)
	8	6001 020	Clip
	8	---- ---	Washer
	8	441 256	Nut

REF. NO.	QTY	PART NUMBER	DESCRIPTION
26	1	2254 092	ORNAMENT and MEDALLION, Deck Lid (23-19-114)
	1	6000 987	Retainer
	2	---- ---	Nut
27	1	2254 653	NAME PLATE, Deck Lid (23-19-114)
	4	2254 768	Seal
	4	1839 995	Nut
28	1	2254 103	MOULDING, Deck Opening Lower Panel License Insert (23-23-32)
	4	6000 709	Clip
	4	---- ---	Nut
	2	6001 011	Clip
29	1	2275 941	MOULDING PACKAGE, Quarter Panel Lower, Right (23-23-39)
	1	2298 727	MOULDING PACKAGE, Quarter Panel Lower, Left (23-23-39)
	10	6001 033	Clip
	8	6000 709	Clip
	8	151 497	Nut
30	1	2421 684-5	MOULDING PACKAGE, Quarter Panel Upper Rear (23-23-39)
	6	2254 396	Seal
	12	6022 005	Spacer
	12	6006 264	Nut
31	1	2216 072-3	MOULDING, Quarter Panel Wheel Opening (23-23-39)
	14	9417 316	Screw
32	1	2298 642-3	MOULDING PACKAGE, Quarter Panel Upper Front (23-23-39)
	2	---- ---	Nut
33	1	2421 913-4	MOULDING PACKAGE, Door Belt Rear (23-23-32)
	12	6023 574	Screw
34	2	2275 942	MOULDING PACKAGE, Door Lower (23-23-32)
	10	6001 033	Clip

Part Type Code is Indicated in Parentheses **19x9432A**

MOULDINGS (LATE TYPE) - PLYMOUTH FURY SP1-2(H) SPECIAL CLUB COUPE

MyMopar.com

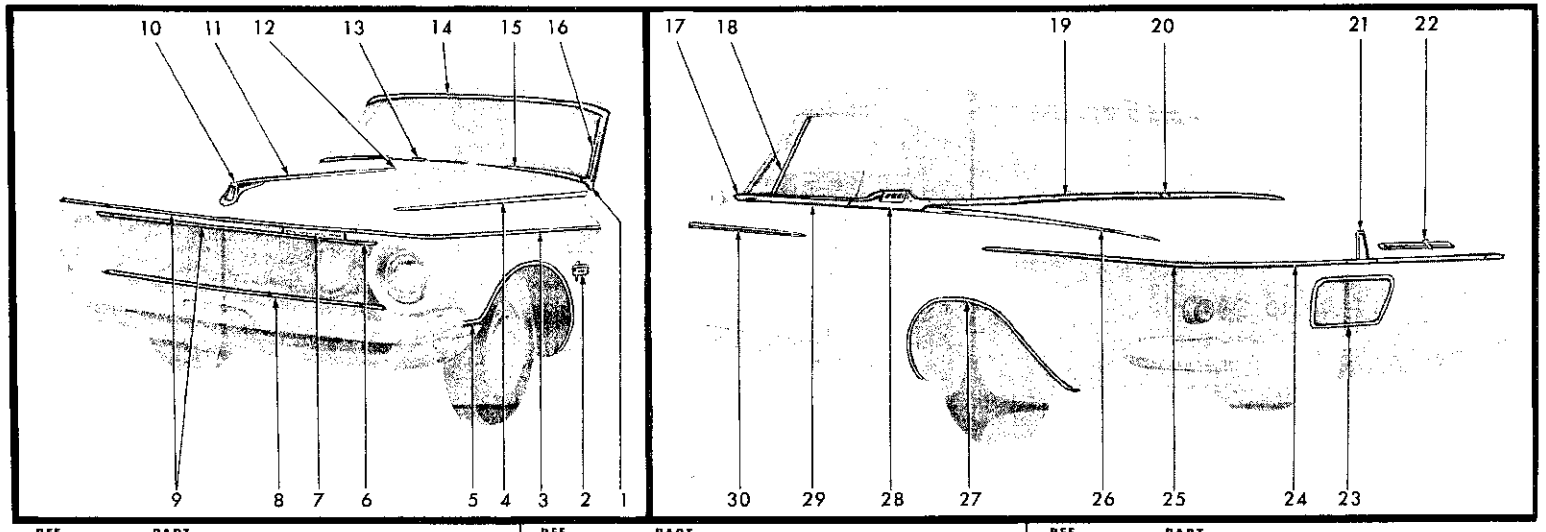

REF. NO.	QTY	PART NUMBER	DESCRIPTION
1	1	2166 970-1	MOULDING, Windshield Outside Finish Lower End (23-23-65)
2	2	2099 464	NAME PLATE, Fender Side (12-15-21)
	4	9415 250	Nut
3	1	2421 222-3	MOULDING PACKAGE, Fender Front and Side (12-15-2)
	14	6001 033	Clip
	4	6001 043	Clip
	2	6001 020	Clip
	4	9415 250	Nut
	2	116 000	Nut
4	1	2421 688-9	MOULDING PACKAGE, Fender Side Upper (12-15-2)
	2	6000 960	Clip
	12	2254 396	Spacer
	12	6006 263	Nut
5	1	2298 673-4	MOULDING PACKAGE, Wheel Opening (12-15-2)
	14	9413 197	Screw
	6	6001 231	Clip
	6	6006 438	Nut
6	1	2298 661-2	MOULDING PACKAGE, Hood Extension (12-15-2)
	4	9413 197	Screw
7	1	2099 410	NAME PLATE, Hood Front (15-06-3)
	3	6006 264	Nut
8	1	2298 658-9	MOULDING PACKAGE, Radiator Stone Deflector (7-35-20)
	8	6001 257	Clip
9	1	2421 221	MOULDING PACKAGE, Hood Front Upper (15-25-2)
	6	6001 043	Clip
	6	9415 250	Nut
	1	2298 664	MOULDING PACKAGE, Hood Front Lower (15-25-2)
	6	6000 617	Clip
	6	116 000	Nut

Part Type Code is Indicated in Parentheses

REF. NO.	QTY	PART NUMBER	DESCRIPTION
10	1	2099 421	ORNAMENT, w/Medallion, Hood Top (15-03-18)
	2	120 375	Nut
	1	6023 076	Stud, Long
	1	6024 084	Stud, Short
11	1	2298 660	MOULDING PACKAGE, Hood Top (15-25-2)
	14	6001 031	Clip
12	1	2298 663	CAP PACKAGE, Hood Top Moulding Rear (15-25-2)
	1	6006 264	Nut
13	1	2254 524	COVER, Windshield Outside Finish Lower Moulding Joint (23-23-66)
14	1	2252 056-7	MOULDING and EXTENSION, Windshield Header Outside Finish (23-23-65)
15	1	2298 571-2	MOULDING PACKAGE, Windshield Outside Finish Lower (23-23-65)
	10	6000 966	Retainer
16	1	2166 966-7	MOULDING, Windshield Outside Finish Side (23-23-65)
17	1	2421 931-2	MOULDING PACKAGE, Door Belt Front (23-23-32)
	2	9417 273	Screw
	2	2254 396	Spacer
	2	6006 264	Nut
18	4	2254 031	MOULDING, Door Vent Wing Division Channel (23-23-36)
19	1	2251 638-9	MOULDING, Quarter Panel Belt Rear (23-23-39)
	10	2189 748	Retainer
	10	---- ---	Screw
20	1	2251 635	CAP, Quarter Panel Belt Moulding Center (23-23-41)
	1	2094 394	Fastener
	1	2189 748	Retainer
21	1	2254 092	ORNAMENT and MEDALLION, Deck Lid (23-19-114)
	1	6000 987	Retainer
	2	---- ---	Nut

REF. NO.	QTY	PART NUMBER	DESCRIPTION
22	1	2254 653	NAME PLATE, Deck Lid (23-19-114)
	4	2254 768	Seal
	4	1839 995	Nut
23	1	2254 103	MOULDING, Deck Opening Lower Panel License Insert (23-23-23)
	4	6000 709	Clip
	4	---- ---	Nut
	2	6001 011	Clip
24	2	2275 939	MOULDING PACKAGE, Deck Lid Lower (23-23-30)
	8	6001 020	Clip
	8	---- ---	Washer
	8	441 256	Nut
25	1	2275 941	MOULDING PACKAGE, Quarter Panel Lower Right (23-23-39)
	1	2298 727	MOULDING PACKAGE, Quarter Panel Lower Left (23-23-39)
	10	6001 033	Clip
	8	6000 709	Clip
	8	151 497	Nut
26	1	2421 690-1	MOULDING PACKAGE, Quarter Panel Upper Rear (23-23-39)
	2	6023 574	Screw
	2	9416 042	Screw
	4	2254 396	Spacer
	12	6022 005	Seal
	10	6006 264	Nut
	2	6000 960	Clip
27	1	2216 072-3	MOULDING, Quarter Panel Wheel Opening (23-23-39)
	14	9417 316	Screw
28	1	2299 408-9	MOULDING PACKAGE, Quarter Panel Belt Front (23-23-39)
	6	188 973	Screw
29	1	2421 913-4	MOULDING PACKAGE, Door Belt Rear (23-23-32)
	12	6023 574	Screw
30	2	2275 942	MOULDING PACKAGE, Door Lower (23-23-32)
	10	6001 033	Screw

All Packages Include Attaching Parts

19x9433

MOULDINGS (LATE TYPE) - PLYMOUTH FURY SP1-2(H) CONVERTIBLE COUPE

MyMopar.com

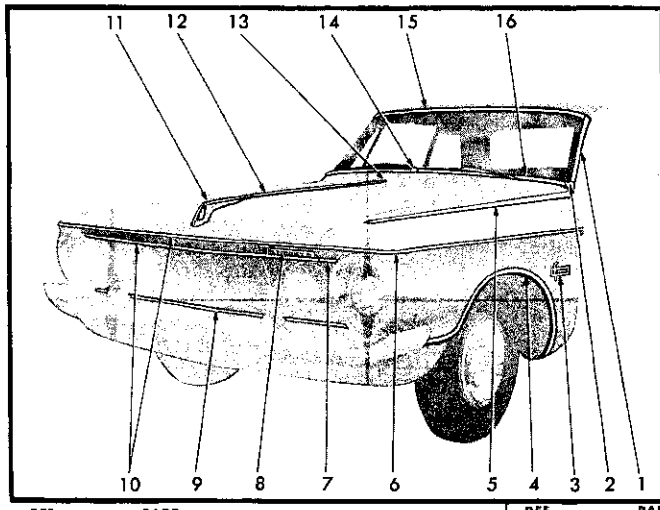

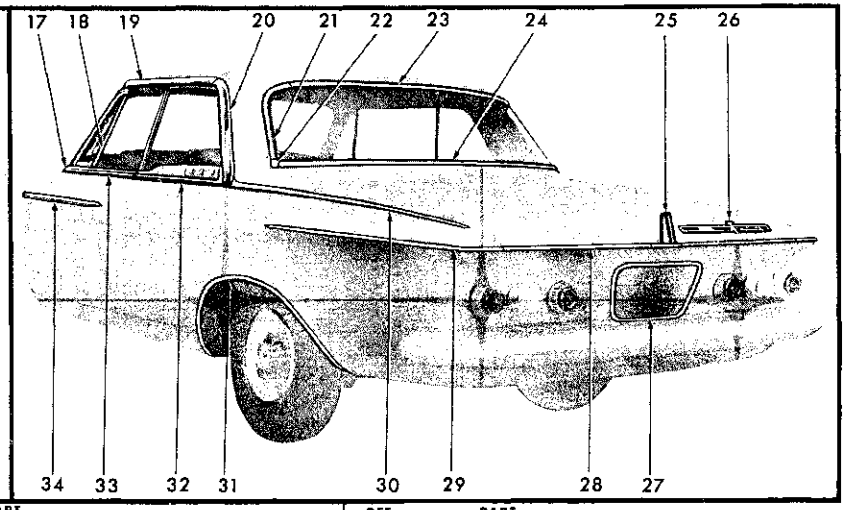

REF. NO.	QTY	PART NUMBER	DESCRIPTION
1	1	2166 966-7	MOULDING, Windshield Outside Finish Side (23-23-65)
2	1	2166 970-1	MOULDING, Windshield Outside Finish Lower End (23-23-65)
3	2	2099 464	NAME PLATE, Fender Side (12-15-21)
	4	9415 250	Nut
4	1	2298 673-4	MOULDING PACKAGE, Wheel Opening (12-15-2)
	14	9413 197	Screw
	6	6001 231	Clip
	6	6006 438	Nut
5	1	2421 688-9	MOULDING PACKAGE, Fender Side Upper (12-15-2)
	2	6000 960	Clip
	12	2254 396	Spacer
	12	6006 263	Nut
6	1	2421 222-3	MOULDING PACKAGE, Fender Front and Side (12-15-2)
	14	6001 033	Clip
	4	6001 043	Clip
	2	6001 020	Clip
	4	9415 250	Nut
	2	116 000	Nut
7	1	2298 661-2	MOULDING PACKAGE, Hood Extension (12-15-2)
	4	9413 197	Screw
8	1	2099 410	NAME PLATE, Hood Front (15-06-3)
	3	6006 264	Nut
9	1	2298 658-9	MOULDING PACKAGE, Radiator Stone Deflector (7-35-20)
	8	6001 257	Clip
10	1	2421 221	MOULDING PACKAGE, Hood Front Upper (15-25-2)
	6	6001 043	Clip
	6	9415 250	Nut
	1	2298 664	MOULDING PACKAGE, Hood Front Lower (15-25-2)
	6	6000 617	Clip
	6	116 000	Nut

All Packages Include Attaching Parts

REF. NO.	QTY	PART NUMBER	DESCRIPTION
11	1	2299 421	ORNAMENT, w/Medallion, Hood Top (15-03-18)
	2	120 375	Nut
	1	6023 076	Stud, Long
	1	6024 084	Stud, Short
12	1	2298 660	MOULDING PACKAGE, Hood Top (15-25-2)
	14	6001 031	Clip
13	1	2298 663	CAP PACKAGE, Hood Top Moulding Rear (15-25-2)
	1	6006 264	Nut
14	1	2254 524	COVER, Windshield Outside Finish Lower Moulding Joint (23-23-66)
15	1	2298 552	MOULDING PACKAGE, Windshield Outside Finish Upper (23-23-65)
	8	6000 966	Retainer
16	1	2298 571-2	MOULDING PACKAGE, Windshield Outside Finish Lower (23-23-65)
	10	6000 966	Retainer
17	1	2421 931-2	MOULDING PACKAGE, Front Door Front (23-23-32)
	2	9417 273	Screw
	2	2254 396	Spacer
	2	6006 264	Nut
18	4	2254 031	MOULDING, Front Door Vent Wing Division Channel (23-23-36)
19	1	2216 042-3	MOULDING, Roof Panel Outside Finish Side Front (23-23-42)
20	1	2298 567-8	MOULDING PACKAGE, Roof Panel Outside Finish Side Rear (23-23-42)
	6	---- ---	Screw
	2	---- ---	Nut and Seal
21	1	2298 554-5	MOULDING PACKAGE, Rear Window Outside Finish Side (23-23-52)
	6	6000 966	Retainer
22	1	2254 066-7	COVER, Rear Window Outside Finish Side to Lower Moulding (23-23-41)
23	1	2298 556	MOULDING PACKAGE, Rear Window Outside Finish Upper (23-23-52)
	5	6000 966	Retainer
24	1	2421 206	MOULDING PACKAGE, Rear Window Outside Finish Lower (23-23-52)
	10	6000 966	Retainer

REF. NO.	QTY	PART NUMBER	DESCRIPTION
25	1	2254 092	ORNAMENT and MEDALLION, Deck Lid (23-19-114)
	1	6000 987	Retainer
	2	---- ---	Nut
26	1	2254 653	NAME PLATE, Deck Lid (23-19-114)
	4	2254 768	Seal
	4	1839 995	Nut
27	1	2254 103	MOULDING, Deck Opening Lower Panel License Insert (23-23-23)
	4	6000 709	Clip
	4	---- ---	Nut
	2	6001 011	Clip
28	2	2275 939	MOULDING PACKAGE, Deck Lid Lower (23-23-30)
	8	6001 020	Clip
	8	---- ---	Washer
	8	441 256	Nut
29	1	2275 941	MOULDING PACKAGE, Quarter Panel Lower Right (23-23-39)
	1	2298 727	MOULDING PACKAGE, Quarter Panel Lower Left (23-23-39)
	10	6001 033	Clip
	8	6000 709	Clip
	8	151 497	Nut
30	1	2421 684-5	MOULDING PACKAGE, Quarter Panel Upper (23-23-39)
	6	2254 396	Spacer
	2	6023 574	Screw
	12	6022 005	Seal
	12	6006 264	Nut
31	1	2216 072-3	MOULDING, Quarter Panel Wheel Opening (23-23-39)
	14	9417 316	Screw
32	1	2299 412-3	MOULDING PACKAGE, Rear Door Belt (23-23-33)
	8	188 973	Screw
33	1	2421 917-8	MOULDING PACKAGE, Front Door Belt Rear (23-23-32)
	16	6023 574	Screw
34	2	2275 942	MOULDING PACKAGE, Front Door Lower (23-23-32)
	10	6001 033	Clip

Part Type Code is Indicated in Parentheses **19x9434A**

MOULDINGS (LATE TYPE) - PLYMOUTH FURY SP1-2(H) SPECIAL 4 DOOR SEDAN

MyMopar.com

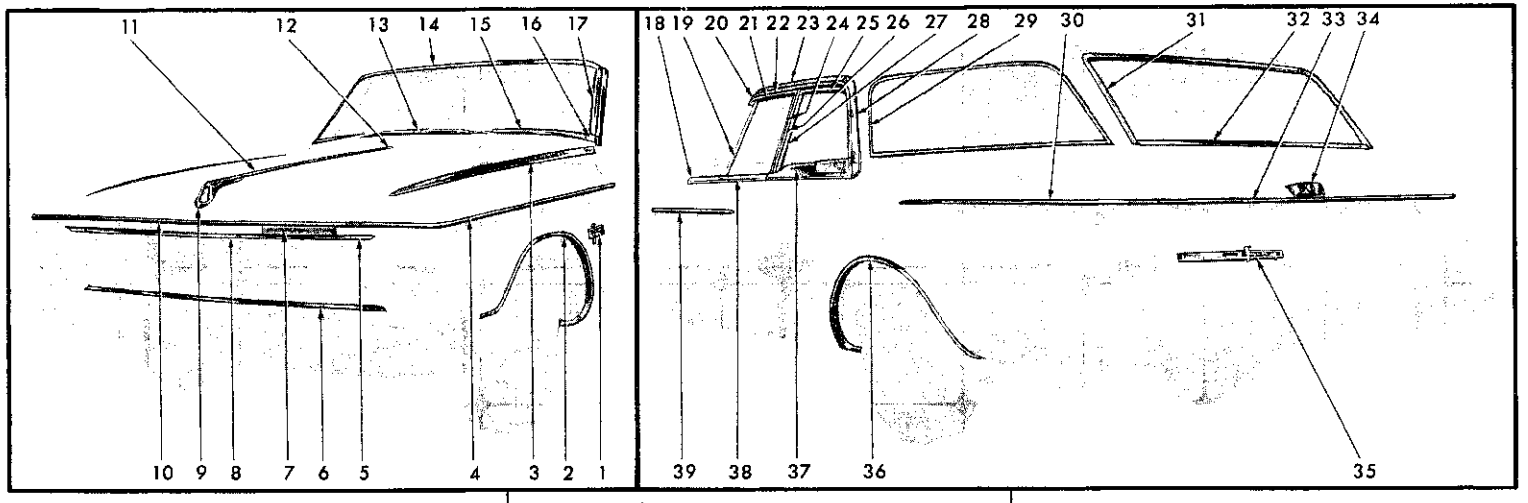

REF. NO.	QTY	PART NUMBER	DESCRIPTION
1	2	2099 464	NAME PLATE, Fender Side (12-15-21)
	4	9415 250	Nut
2	1	2298 673-4	MOULDING PACKAGE, Wheel Opening (12-15-2)
	14	9413 197	Screw
	6	6001 231	Clip
	6	6006 438	Nut
3	1	2421 688-9	MOULDING PACKAGE, Fender Side Upper (12-15-2)
	2	6000 960	Clip
	12	2254 396	Spacer
	12	6006 263	Nut
4	1	2421 222-3	MOULDING PACKAGE, Fender Side and Front (12-15-2)
	14	6001 033	Clip
	4	6001 043	Clip
	2	6001 020	Clip
	4	9415 250	Nut
	2	116 000	Nut
5	1	2298 661-2	MOULDING PACKAGE, Fender Hood Extension (12-15-2)
	4	9413 197	Screw
6	1	2298 658-9	MOULDING PACKAGE, Radiator Stone Deflector (7-35-20)
	8	6001 257	Clip
7	1	2099 410	NAME PLATE, Hood Front (15-06-3)
	3	6006 264	Nut
8	1	2298 664	MOULDING PACKAGE, Hood Front Lower (15-25-2)
	6	6000 617	Clip
	6	116 000	Nut
9	1	2099 421	ORNAMENT, w/Medallion, Hood Top (15-03-18)
	2	120 375	Nut
	1	6023 076	Stud, Long
	1	6024 084	Stud, Short
10	1	2421 221	MOULDING PACKAGE, Hood Front Upper (15-25-2)
	6	6001 043	Clip
	6	9415 250	Nut
11	1	2298 660	MOULDING PACKAGE, Hood Top (15-25-2)
	14	6001 031	Clip
12	1	2298 663	CAP PACKAGE, Hood Top Moulding Rear (15-25-2)
	1	6006 264	Nut
13	1	2254 524	COVER, Windshield Outside Finish Lower Moulding Joint (23-23-66)
14	1	2298 552	MOULDING PACKAGE, Windshield Outside Finish Upper (23-23-65)
	8	6000 966	Retainer
15	1	2298 571-2	MOULDING PACKAGE, Windshield Outside Finish Lower (23-23-65)
	10	6000 966	Retainer
16	1	2166 970-1	MOULDING, Windshield Outside Finish Lower End (23-23-65)
17	1	2166 966-7	MOULDING, Windshield Outside Finish Side (23-23-65)
18	1	2421 931-2	MOULDING PACKAGE, Front Door Belt Front (23-23-32)
	2	9417 273	Screw
	2	2254 396	Spacer
	2	6006 264	Nut
19	4	2254 031	MOULDING, Front Door Vent Wing Division Channel (23-23-36)
20	1	2254 314-5	CAP, Roof Side Drain Trough Moulding Front End Cap (23-59-57)
21	1	2167 996-7	MOULDING, Front Door Window Frame Upper (23-23-32)
22	1	2216 090-1	MOULDING, Roof Side Drain Trough (23-59-61)
23	1	2298 565-6	MOULDING PACKAGE, Roof Panel Outside Finish Side Front (23-23-42)
	12	6001 245	Clip
24	1	2167 998-9	MOULDING, Front Door Window Frame Rear (23-23-32)
25	1	2216 036-7	MOULDING, Rear Door Window Frame Upper (23-23-33)
26	1	2216 356-7	PANEL, Center Pillar Upper Finish (23-23-16)
	4	6022 890	Screw
27	1	2167 998-9	MOULDING, Rear Door Window Frame Front (23-23-33)
28	1	2298 563-4	MOULDING PACKAGE, Roof Panel Outside Finish Side Rear (23-23-42)
	2	---- ---	Retainer
	2	---- ---	Nut and Seal
	4	6001 006	Clip and Seal
29	2	2255 027	LOCKINGSTRIP, Quarter Window Glass Weatherstrip Mylar (23-63-110)
30	1	2275 302-3	MOULDING PACKAGE, Quarter Panel (23-23-39)
	18	6001 033	Clip
	8	6000 709	Clip
	8	151 497	Nut
31	1	2196 608-9	MOULDING PACKAGE, Tailgate Opening Outside Finish Rear Upper Pillar (23-23-60)
	*	6006 451	Clip
32	1	2275 995	MOULDING PACKAGE, Tailgate Outside Finish Belt (23-23-61)
	2	125 978	Screw
	7	6001 232	Clip
33	1	2275 949	MOULDING PACKAGE, Tailgate Outside Panel (23-23-61)
	5	6001 033	Clip
	2	6001 020	Clip
	2	151 497	Nut
34	1	2251 373	ORNAMENT, Tailgate Electric Window Lift (23-54-11)
35	1	2254 653	NAME PLATE, Tailgate Fury (23-54-11)
	3	1839 995	Nut
36	1	2275 334-5	MOULDING PACKAGE, Quarter Panel Wheel Opening (23-23-39)
	16	---- ---	Screw
37	1	2299 410-1	MOULDING PACKAGE, Rear Door Belt (23-23-33)
	8	188 973	Screw
38	1	2421 915-6	MOULDING PACKAGE, Front Door Belt Rear (23-23-32)
	16	6023 574	Screw
39	2	2275 942	MOULDING PACKAGE, Front Door Lower (23-23-32)
	10	6001 033	Clip

All Packages Include Attaching Parts

Part Type Code is Indicated in Parentheses

19x9435

MOULDINGS (LATE TYPE) - PLYMOUTH FURY SP2(H) SUBURBAN

MyMopar.com

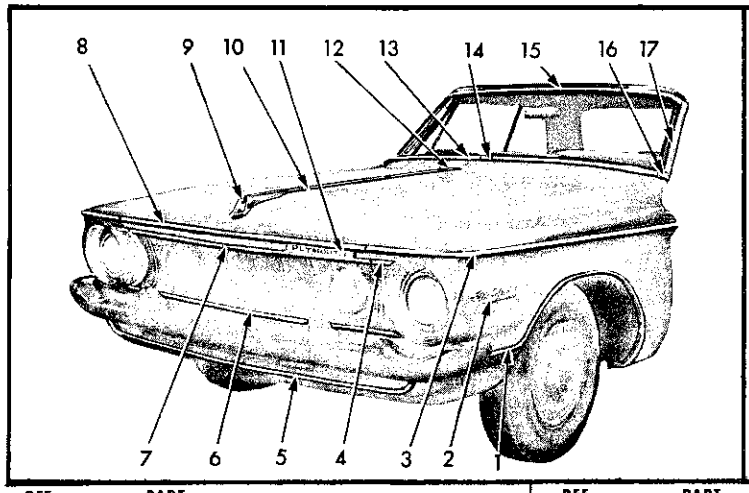

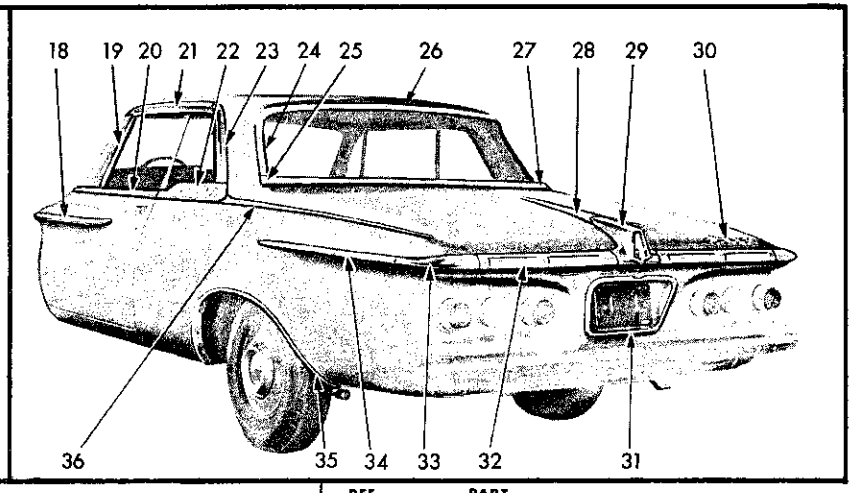

REF. NO.	QTY	PART NUMBER	DESCRIPTION
1	1	2298 673-4	MOULDING PACKAGE, Fender Wheel Opening (12-15-2)
	14	9413 197	Screw
	6	6001 231	Clip
	6	6006 438	Nut
2	2	2276 715	NAME PLATE, Fender Side - Sport Fury Golden Commando (12-15-21)
	8	6001 254	Clip
3	1	2421 222-3	MOULDING PACKAGE, Fender Side and Front (12-15-2)
	14	6001 033	Clip
	4	6001 043	Clip
	2	6001 020	Clip
	4	9415 250	Nut
	2	151 497	Nut
4	1	2298 661-2	MOULDING PACKAGE, Fender Hood Extension (12-15-2)
	4	125 978	Screw
5	1	2421 220	MOULDING PACKAGE, Radiator Dust Shield (7-31-11)
	9	6001 033	Clip
6	1	2298 658-9	MOULDING PACKAGE, Radiator Stone Deflector (7-35-20)
	8	6001 257	Clip
7	1	2298 664	MOULDING PACKAGE, Hood Front, Lower (15-25-2)
	6	6000 617	Clip
	6	271 472	Nut
8	1	2421 221	MOULDING PACKAGE, Hood Front, Upper (15-25-2)
	6	6001 043	Clip
	6	274 750	Nut
9	1	2276 642	ORNAMENT, w/Medallion, Hood Top (15-03-18)
	2	120 375	Nut
	1	6023 076	Stud, Long
	1	6024 084	Stud, Short
10	1	2298 660	MOULDING PACKAGE, Hood Top (15-25-2)
	7	6001 031	Clip
	1	271 472	Nut

All Packages Include Attaching Parts

REF. NO.	QTY	PART NUMBER	DESCRIPTION
11	1	2099 410	NAME PLATE, Hood Front (15-06-3)
	3	6006 264	Nut
12	1	2298 663	CAP PACKAGE, Hood Top Moulding Rear (15-25-2)
	1	6006 264	Nut
13	1	2298 571-2	MOULDING PACKAGE, Windshield Outside Finish Lower (23-23-65)
	10	6000 966	Retainer
14	1	2254 524	COVER, Windshield Outside Finish Lower Moulding Joint (23-23-66)
15	1	2298 552	MOULDING PACKAGE, Windshield Outside Finish Upper (23-23-65)
	8	6000 966	Retainer
16	1	2166 970-1	MOULDING, Windshield Outside Finish Lower End (23-23-65)
17	1	2166 966-7	MOULDING, Windshield Outside Finish Side (23-23-65)
18	2	2275 942	MOULDING PACKAGE, Front Door Lower (23-23-32)
	10	6000 972	Clip
19	4	2254 031	MOULDING, Door Vent Wing Division Channel (23-23-36)
20	1	2299 406-7	MOULDING PACKAGE, Door Belt (23-23-32)
	6	188 973	Screw
21	1	2216 042-3	MOULDING, Roof Panel Outside Finish Side (23-23-42)
22	1	2298 642-3	MOULDING PACKAGE, Quarter Panel Belt (23-23-39)
	2	---- ---	Nut and Seal
23	1	2216 046-7	MOULDING, Roof Panel Outside Finish Side Rear (23-23-42)
24	1	2298 554-5	MOULDING PACKAGE, Rear Window Outside Finish Side (23-23-52)
	6	6000 966	Retainer
25	1	2254 066-7	COVER, Rear Window Outside Finish Side to Lower Moulding Joint (23-23-41)
26	1	2298 556	MOULDING PACKAGE, Rear Window Outside Finish Upper (23-23-52)
	5	6000 966	Retainer

REF. NO.	QTY	PART NUMBER	DESCRIPTION
27	1	2421 206	MOULDING PACKAGE, Rear Window Outside Finish Lower (23-23-52)
	10	6000 966	Retainer
28	1	2275 938	MOULDING PACKAGE, Deck Lid Upper (23-23-30)
	2	6000 987	Retainer
	2	---- ---	Nut
29	1	2252 390	ORNAMENT and INSERT, Deck Lid (23-19-114)
	1	2422 823	ORNAMENT and INSERT, Deck Lid (w/o Hole) (23-19-114)
	1	6000 987	Retainer
	1	---- ---	Nut
	1	6006 024	Nut
30	1	2252 359	NAME PLATE, Deck Lid (23-19-114)
	4	152 259	Nut
31	1	2254 103	MOULDING and COVER, Deck Lower Panel License Depression (23-23-23)
	4	6001 020	Clip
	2	6001 011	Clip
	4	---- ---	Nut
32	1	2421 202-3	MOULDING PACKAGE, Deck Lid Lower (23-23-30)
	8	---- ---	Nut
33	1	2421 204-5	MOULDING PACKAGE, Quarter Panel Lower Rear (23-23-39)
	2	---- ---	Screw
	4	6006 263	Nut
34	1	2421 200-1	MOULDING PACKAGE, Quarter Panel Lower Front (23-23-39)
	10	6001 017	Clip
35	1	2216 072-3	MOULDING, Quarter Panel Wheel Opening (23-23-39)
	14	9417 316	Screw
36	1	2421 684-5	MOULDING PACKAGE, Quarter Panel Belt Rear (23-23-39)
	6	2254 396	Spacer
	12	---- ---	Seal
	12	6006 264	Nut
	2	6023 574	Screw

Part Type Code is Indicated in Parentheses **19x9400A**

MOULDINGS - PLYMOUTH FURY SP2(P) SPECIAL CLUB COUPE

MyMopar.com

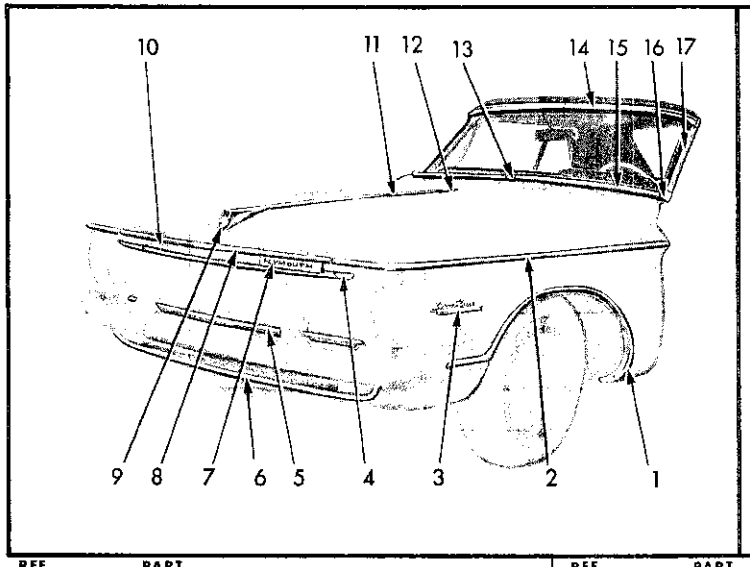

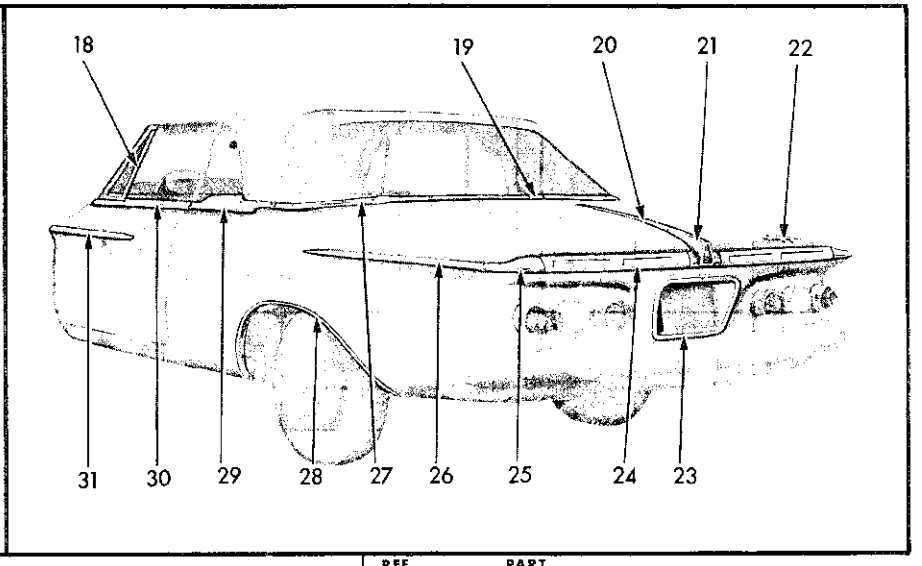

REF. NO.	QTY	PART NUMBER	DESCRIPTION
1	1	2298 673-4	MOULDING PACKAGE, Fender Wheel Opening (12-15-2)
	14	9413 197	Screw
	6	6001 231	Clip
	6	6006 438	Nut
2	1	2421 222-3	MOULDING PACKAGE, Fender Side and Front (12-15-2)
	14	6001 033	Clip
	4	6001 043	Clip
	2	6001 020	Clip
	4	9415 250	Nut
	2	151 497	Nut
3	2	2276 715	NAME PLATE, Fender Side - Sport Fury Golden Commando (12-15-21)
	8	6001 254	Clip
4	1	2298 661-2	MOULDING PACKAGE, Fender Hood Extension (12-15-2)
	4	125 978	Screw
5	1	2298 658-9	MOULDING PACKAGE, Radiator Stone Deflector (7-35-20)
	8	6001 257	Clip
6	1	2421 220	MOULDING PACKAGE, Radiator Dust Shield (7-31-11)
	9	6001 033	Clip
7	1	2099 410	NAME PLATE, Hood Front (15-06-3)
	3	6006 264	Nut
8	1	2421 221	MOULDING PACKAGE, Hood Front, Upper (15-25-2)
	6	6001 043	Clip
	6	274 750	Nut
9	1	2276 642	ORNAMENT, w/Medallion, Hood Top (15-03-18)
	2	120 375	Nut
	1	6023 076	Stud, Long
	1	6024 084	Stud, Short

All Packages Include Attaching Parts

REF. NO.	QTY	PART NUMBER	DESCRIPTION
10	1	2298 664	MOULDING PACKAGE, Hood Front, Lower (15-25-2)
	6	6000 617	Clip
	6	271 472	Nut
11	1	2298 660	MOULDING PACKAGE, Hood Top (15-25-2)
	7	6001 031	Clip
	1	271 472	Nut
12	1	2298 663	CAP PACKAGE, Hood Top Moulding Rear (15-25-2)
	1	6006 264	Nut
13	1	2254 524	COVER, Windshield Outside Finish Lower Moulding Joint (23-23-66)
14	1	2252 056-7	MOULDING and EXTENSION, Windshield Header Outside Finish (23-23-65)
15	1	2298 571-2	MOULDING PACKAGE, Windshield Outside Finish Lower (23-23-65)
	10	6000 966	Retainer
16	1	2166 970-1	MOULDING, Windshield Outside Finish Lower End (23-23-65)
17	1	2166 966-7	MOULDING, Windshield Outside Finish Side (23-23-65)
18	4	2254 031	MOULDING, Door Vent Wing Division Channel (23-23-36)
19	1	2251 635	CAP, Quarter Panel Belt Moulding Center (23-23-41)
	1	2189 748	Retainer
	1	2094 394	Stud
20	1	2275 938	MOULDING PACKAGE, Deck Lid Upper (23-23-30)
	2	6000 987	Retainer
	2	---- ---	Nut
21	1	2252 390	ORNAMENT and INSERT, Deck Lid (23-19-114)
	1	2422 823	ORNAMENT and INSERT, Deck Lid (w/o Hole) (23-19-114)
	1	6000 987	Retainer
	1	6006 024	Nut

REF. NO.	QTY	PART NUMBER	DESCRIPTION
22	1	2252 359	NAME PLATE, Deck Lid (23-19-114)
	4	152 259	Nut
23	1	2254 103	MOULDING and COVER, Deck Lower Panel License Depression (23-23-23)
	4	6001 020	Clip
	4	---- ---	Nut
	2	6001 011	Clip
24	1	2421 202-3	MOULDING PACKAGE, Deck Lid Lower (23-23-30)
	8	---- ---	Nut
25	1	2421 204-5	MOULDING PACKAGE, Quarter Panel Lower Rear (23-23-39)
	2	---- ---	Screw
	4	6006 263	Nut
26	1	2421 200-1	MOULDING PACKAGE, Quarter Panel Lower Front (23-23-39)
	10	6001 017	Clip
27	1	2251 638-9	MOULDING, Quarter Panel Belt Rear (23-23-39)
	16	6000 433	Fastener
28	1	2216 072-3	MOULDING, Quarter Panel Wheel Opening (23-23-39)
	14	9417 316	Screw
29	1	2299 408-9	MOULDING PACKAGE, Quarter Panel Belt Front (23-23-39)
	6	188 973	Screw
30	1	2299 406-7	MOULDING PACKAGE, Door Belt (23-23-32)
	6	188 973	Screw
31	2	2275 942	MOULDING PACKAGE, Door Lower (23-23-32)
	10	6000 972	Clip

Part Type Code is Indicated in Parentheses **19x9401A**

MOULDINGS - PLYMOUTH FURY SP2(P) CONVERTIBLE COUPE

MyMopar.com

CODE	PART NAME AND DESCRIPTION	CYL.	PER CAR	VALIANT LANCER	PLYMOUTH DODGE	CHRYSLER IMPERIAL

NOTES

★ Indicates use as required.
⊟ Indicates parts not listed in any previous parts book.
May 1, 1962.

Printed in U.S.A.
Prices and specifications subject to change without notice.

MyMopar.com

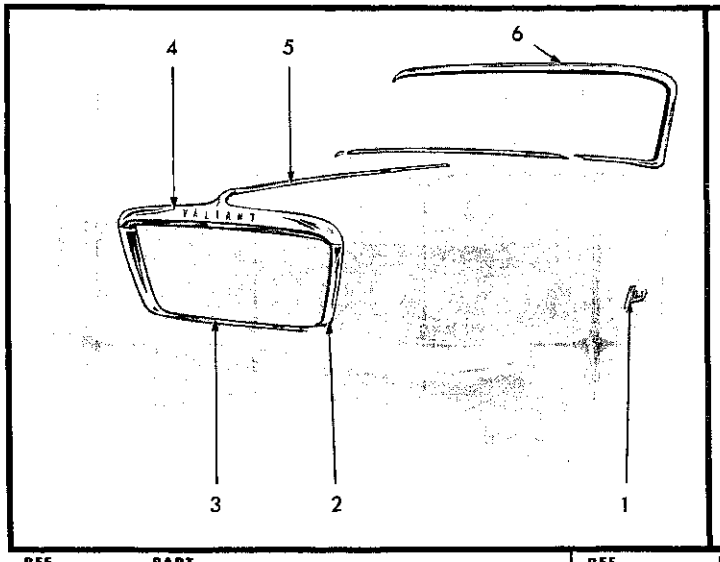

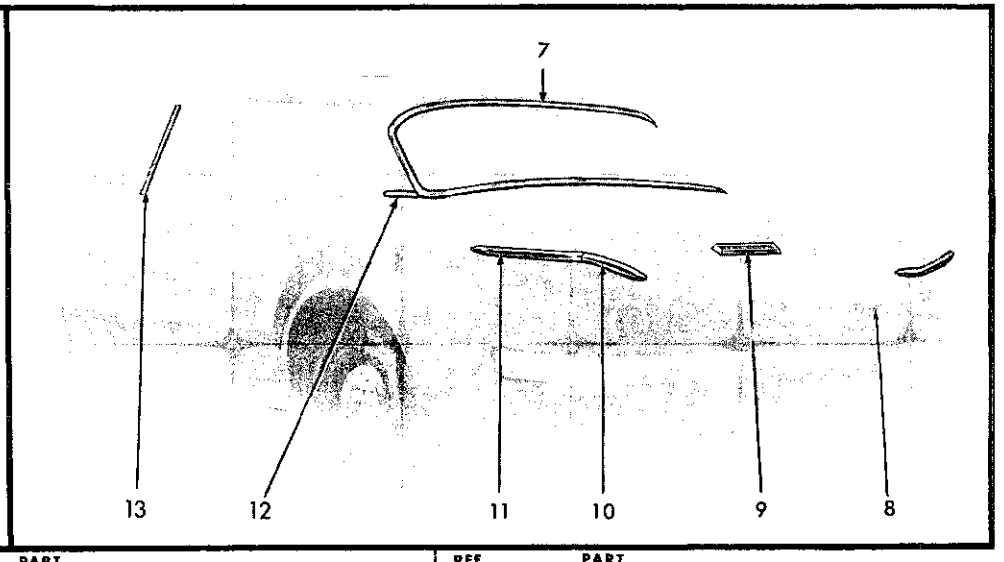

REF. NO.	QTY	PART NUMBER	DESCRIPTION
1	2	2196 619	NAME PLATE PACKAGE, Fender Side (12-15-21)
	6	9415 250	Nut
2	1	2242 328-9	FRAME, Radiator Grill (7-16-36)
	6	120 375	Nut
	2	161 439	Screw
3	1	2242 170	CAP, Radiator Grille Frame (7-16-44)
4	1	2275 301	MOULDING PACKAGE, Hood Front (15-25-2)
5	1	2298 653	MOULDING PACKAGE, Hood Center (15-25-2)
6	1	2082 278	LOCKINGSTRIP, Windshield Glass Weatherstrip (23-66-239)
7	1	2082 278	LOCKINGSTRIP, Rear Window Glass Weatherstrip (23-63-114)
8	1	2255 220	NAME PLATE, Deck Lid (23-19-114)
	2	152 259	Nut
9	1	2243 275	NAME PLATE, Deck Lid (23-19-114)
	3	---- ---	Washer
	3	9414 977	Nut
10	1	2275 320-1	MOULDING PACKAGE, Quarter Panel Rear (23-23-39)
	4	6000 808	Clip
	4	152 259	Nut
11	1	2275 316-7	MOULDING PACKAGE, Quarter Panel Front (23-23-39)
	6	6000 941	Clip
	4	6000 940	Clip
	2	6017 008	Clip
	2	151 497	Nut
12	2	2298 708	MOULDING PACKAGE, Quarter Panel Belt (23-23-39)
	4	6000 817	Clip
13	2	2189 708-9	MOULDING, Front Door Vent Wing Division Channel (23-23-36)

All Packages Include Attaching Parts

Part Type Code is Indicated in Parentheses

19x9194B

MOULDINGS - VALIANT V100 SV1(L) 4 DOOR SEDAN

MyMopar.com

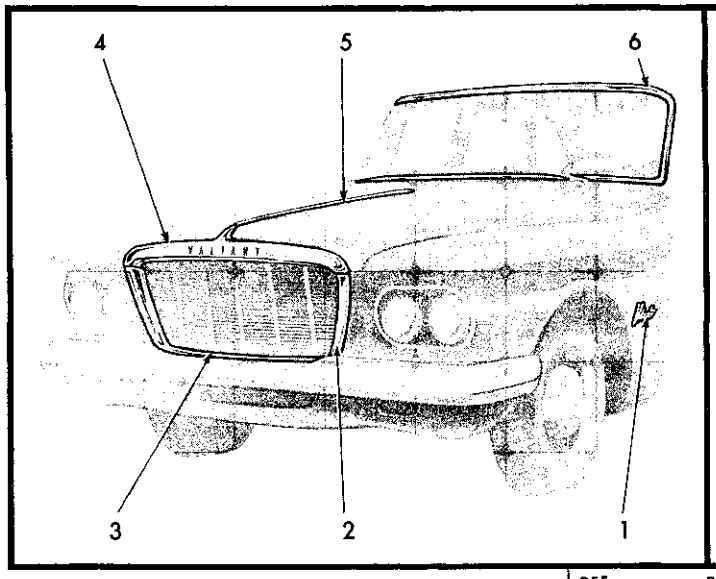

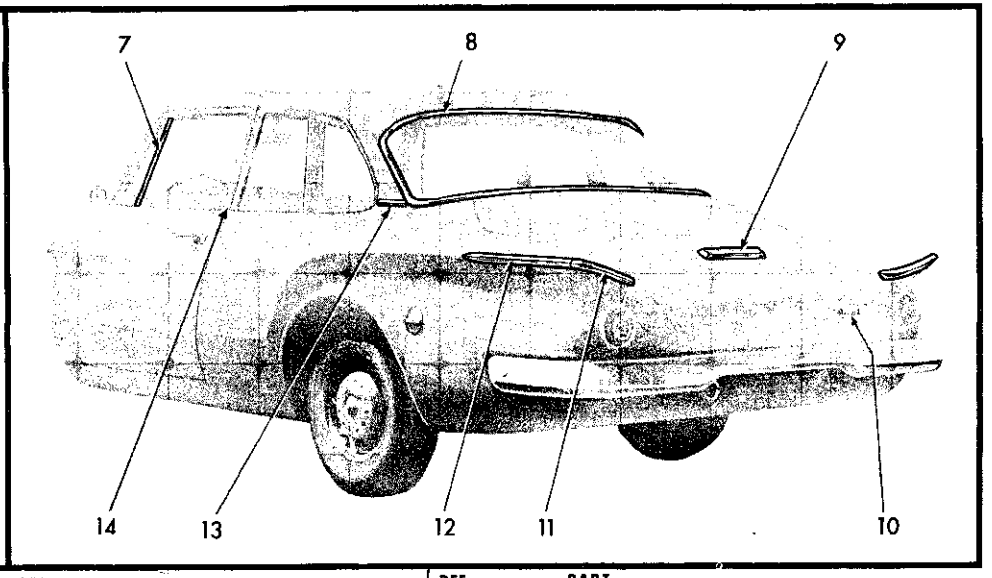

REF. NO.	QTY	PART NUMBER	DESCRIPTION
1	2	2196 619	NAME PLATE, Fender Side (12-15-21)
	6	9415 250	Nut
2	1	2242 328-9	FRAME, Radiator Grille (7-16-36)
	2	161 439	Screw
	6	120 375	Nut
3	1	2242 170	CAP, Radiator Grille Frame (7-16-44)
4	1	2275 301	MOULDING PACKAGE, Hood Front (15-25-2)
	2	1839 995	Nut
	2	107 261	Screw
5	1	2298 653	MOULDING PACKAGE, Hood Panel Center (15-25-2)
	6	6001 250	Clip
6	1	2082 278	LOCKING STRIP, Windshield Glass Weatherstrip (23-66-239)
7	2	2189 708-9	MOULDING, Door Vent Wing Division Channel (23-23-36)
8	1	2082 278	LOCKING STRIP, Rear Window Glass Weatherstrip (23-63-114)
9	1	2243 275	NAME PLATE, Deck Lid (23-19-114)
	3	---- ---	Washer
	3	9414 977	Nut
10	1	2255 220	NAME PLATE, Deck Lid (23-19-114)
	2	152 259	Nut
11	1	2275 320-1	MOULDING PACKAGE, Quarter Panel Rear (23-23-39)
	4	6000 808	Clip
	4	152 259	Nut
12	1	2275 316-7	MOULDING PACKAGE, Quarter Panel Front (23-23-39)
	6	6000 941	Clip
	4	6000 940	Clip
	2	6017 008	Clip
	2	151 497	Nut
13	2	2298 708	MOULDING PACKAGE, Quarter Panel Belt (23-23-39)
	4	6000 817	Clip
14	1	2243 824-5	PANEL, Lock Pillar Upper Finish (23-23-16)
	6	274 114	Screw

All Packages Include Attaching Parts

Part Type Code is Indicated in Parentheses

19x9276C

MOULDINGS - VALIANT V100 SV1(L) CLUB SEDAN

MyMopar.com

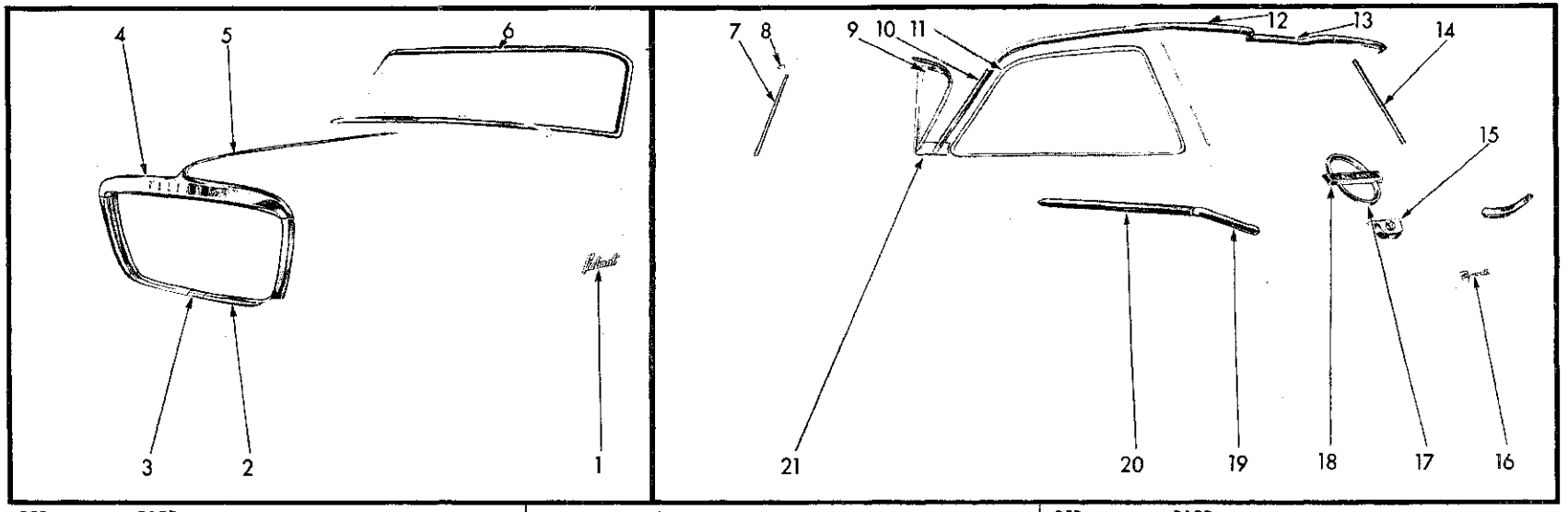

REF. NO.	QTY	PART NUMBER	DESCRIPTION
1	2	2196 619	NAME PLATE, Fender Side (12-15-21)
	6	9415 250	Nut
2	1	2242 328-9	FRAME, Radiator Grille (7-16-36)
	4	120 375	Nut
	2	161 439	Screw
3	1	2242 170	CAP, Radiator Grille Frame (7-16-44)
4	1	2275 301	MOULDING PACKAGE, Hood Front (15-25-2)
	2	107 261	Screw
	2	1839 995	J-Nut
5	1	2298 653	MOULDING PACKAGE, Hood Center (15-25-2)
	6	6001 250	Clip
6	1	2082 278	LOCKINGSTRIP, Windshield Glass Weatherstrip (23-66-239)
7	2	2189 708-9	MOULDINGS, Front Door Vent Wing Division Channel (23-23-36)
8	2	2082 798	CAP, Roof Side Drain Trough Joint (23-59-57)
9	1	2243 268-9	LOCKINGSTRIP, Quarter Window Glass Weatherstrip Mylar (23-63-110)
10	1	2196 628-9	MOULDING PACKAGE, Roof Panel Outside Finish Side Front (23-23-42)
	2	6017 013	Retainer
	2	151 497	Nut & Washer
	8	6017 010	Clip
	2	161 798	Screw
11	2	2243 513	LOCKINGSTRIP, Quarter Window Glass Weatherstrip Mylar (23-63-110)
12	1	2196 626-7	MOULDING PACKAGE, Roof Panel Outside Finish Side Rear (23-23-42)
	2	161 798	Screw
	4	6017 010	Clip
13	1	2196 624	MOULDING PACKAGE, Roof Panel Outside Finish Rear (23-23-42)
	4	161 798	Screw
	4	6017 010	Clip
14	1	2196 608-9	MOULDING PACKAGE, Rear Upper Pillar Outside Finish (23-23-60)
	*	6006 451	Clip
15	1	2196 621	ORNAMENT PACKAGE, Tailgate Outside Panel Electric Window Lift (23-54-11)
	3	271 166	Nut and Washer
16	1	2255 220	NAME PLATE, Tailgate (23-54-11)
	3	9415 250	Nut
17	1	2242 202	ORNAMENT, Tailgate (23-54-11)
	2	6006 263	Nut
18	1	2243 275	NAME PLATE, Tailgate (23-54-11)
	3	---- ---	Washer
	3	9414 977	Nut
19	1	2275 320-1	MOULDING PACKAGE, Quarter Panel Rear (23-23-39)
	4	6000 808	Clip
	4	152 259	Nut
20	1	2275 316-7	MOULDING PACKAGE, Quarter Panel Front (23-23-39)
	6	6000 941	Clip
	4	6000 940	Clip
	2	6017 008	Clip
	2	151 497	Nut
21	2	2275 197-8	MOULDING PACKAGE, Roof Panel Outside Finish Side Extension (23-23-42)
	4	2259 189	Seal
	4	152 260	Nut

All Packages Include Attaching Parts

Part Type Code is Indicated in Parentheses

19x9292B

MOULDINGS - VALIANT V100 SV1(L) SUBURBAN

MyMopar.com

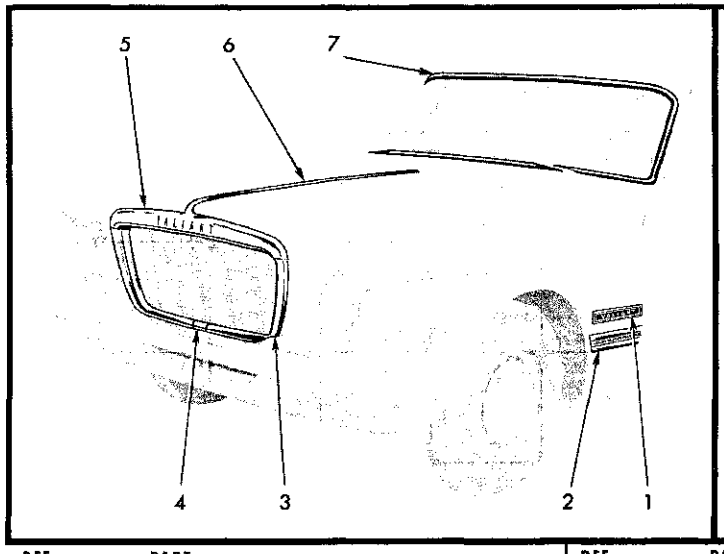

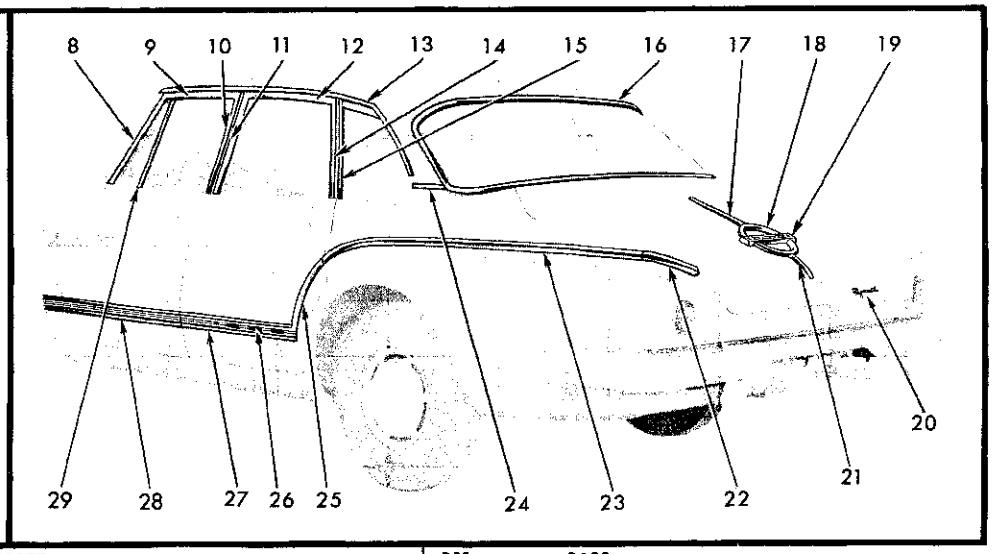

REF. NO.	QTY	PART NUMBER	DESCRIPTION
1	2	2242 119	NAMEPLATE, Fender Side, SV1-H (12-15-2)
		2196 619	SV1-L
2	1	2298 654-5	MOULDING PACKAGE, Fender Side (12-15-2)
	2	6001 050	Retainer
	2	6001 211	Clip
	2	151 497	Nut
3	1	2242 328-9	FRAME, Grille (7-16-36)
4	1	2242 170	CAP, Grille Frame (7-16-44)
5	1	2275 301	MOULDING PACKAGE, Hood Front (15-25-2)
6	1	2298 653	MOULDING PACKAGE, Hood Center (15-25-2)
7	1	2082 278	LOCKINGSTRIP, Windshield Glass Weatherstrip (23-66-239)
8	1	2081 876-7	MOULDING, Front Door Front (23-23-32)
9	1	2081 878-9	MOULDING, Front Door Upper (23-23-32)
10	1	2081 880-1	MOULDING, Front Door Rear (23-23-32)
11	1	2081 882-3	MOULDING, Rear Door Front (23-23-33)
12	1	2081 884-5	MOULDING, Rear Door Upper (23-23-33)
13	1	2081 902-3	MOULDING, Roof Side Drain Trough (23-59-61)
14	1	2081 886-7	MOULDING, Rear Door Rear (23-23-33)
15	1	2243 272-3	LOCKINGSTRIP, Quarter Window Glass Weatherstrip (23-63-110)
16	1	2082 278	LOCKINGSTRIP, Rear Window Glass Weatherstrip (23-63-114)
17	1	2242 200	ORNAMENT, Deck Lid Upper (23-19-114)
	2	152 260	Nut
18	1	2242 120	ORNAMENT, Deck Lid Center (23-19-114)
	2	152 260	Nut
19	1	2243 276	NAME PLATE, Deck Lid (23-19-114)
	2	---- ---	Washer
	2	9414 977	Nut
20	1	2255 220	NAME PLATE, Deck Lid (23-19-114)
	2	152 259	Nut
21	1	2242 201	ORNAMENT, Deck Lid Lower (23-19-114)
	1	152 260	Nut
22	1	2275 320-1	MOULDING PACKAGE, Quarter Panel Rear (23-23-39)
	4	6000 808	Clip
	4	152 259	Nut
23	1	2275 318-9	MOULDING PACKAGE, Quarter Panel Front (23-23-39)
	10	6000 891	Clip and Seal
	4	6000 940	Clip and Seal
	2	6017 008	Clip
	2	151 497	Nut
24	2	2298 708	MOULDING PACKAGE, Quarter Panel Belt (23-23-39)
	4	6000 817	Clip
25	1	2275 328-9	MOULDING PACKAGE, Rear Door Rear (23-23-33)
	2	6017 004	Clip
	2	6017 005	Clip
	2	9415 921	Screw
26	2	2242 121	INSERT, Rear Door Outside Panel Front Moulding (Tape) (23-23-80)
27	1	2298 644-5	MOULDING PACKAGE, Rear Door Front (23-23-33)
	8	6001 050	Retainer
	2	6001 211	Clip
	2	151 497	Nut
28	1	2298 650-1	MOULDING PACKAGE, Front Door (23-23-32)
	12	6001 050	Retainer
	2	6001 211	Clip
	2	151 497	Nut
29	2	2189 708-9	MOULDING, Front Door Division Channel (23-23-36)

All Packages Include Attaching Parts

Part Type Code is Indicated in Parentheses **19x9172C**

MOULDINGS - VALIANT V200 SV1(H) 4 DOOR SEDAN

MyMopar.com

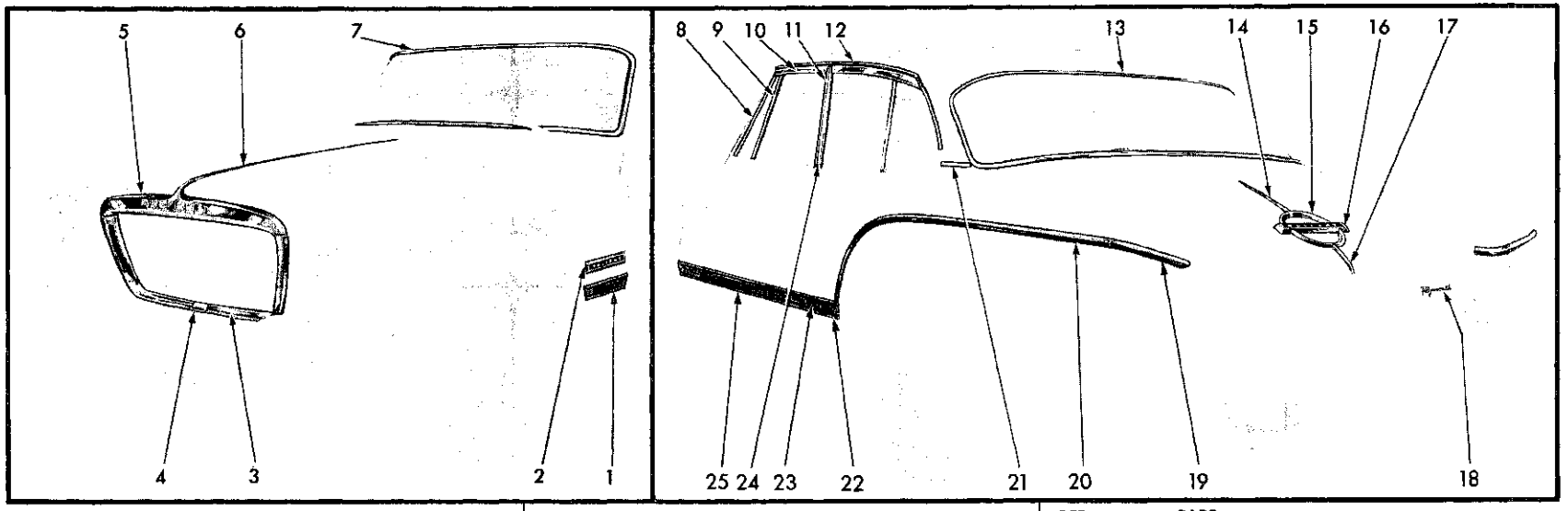

REF. NO.	QTY	PART NUMBER	DESCRIPTION
1	1	2298 654-5	MOULDING PACKAGE, Fender Side (12-15-2)
	2	6001 050	Retainer
	2	6001 211	Clip
	2	151 497	Nut
2	2	2242 119	NAME PLATE, Fender Side (12-15-21)
	2	6000 960	Clip
	4	274 751	Nut
3	1	2242 328-9	FRAME, Radiator Grille (7-16-36)
	4	120 375	Nut
	2	161 439	Screw
4	1	2242 170	CAP, Radiator Grille Frame (7-16-44)
5	1	2275 301	MOULDING PACKAGE, Hood Front (15-25-2)
	2	1839 995	J-Nut
	2	107 261	Screw
6	1	2298 653	MOULDING PACKAGE, Hood Center (15-25-2)
	6	6001 250	Clip
7	1	2082 278	LOCKINGSTRIP, Windshield Glass Weather-strip (23-66-239)

All Packages Include Attaching Parts

REF. NO.	QTY	PART NUMBER	DESCRIPTION
8	1	2081 876-7	MOULDING, Door Window Frame, Front (23-23-32)
9	2	2189 708-9	MOULDING, Door Vent Wing Division Channel (23-23-36)
10	1	2216 550-1	MOULDING, Door Window Frame, Upper (23-23-32)
11	1	2081 882-3	MOULDING, Door Window Frame, Rear (23-23-32)
12	1	2081 902-3	MOULDING, Roof Side Drain Trough (23-59-61)
13	1	2082 278	LOCKINGSTRIP, Rear Window Glass Weather-strip (23-63-114)
14	1	2242 200	ORNAMENT, Deck Lid Upper (23-19-114)
	2	152 260	Nut
15	1	2242 120	ORNAMENT, Deck Lid Center (23-19-114)
	2	152 260	Nut
16	1	2243 276	NAME PLATE, Deck Lid (23-19-114)
	3	6006 263	Nut
17	1	2242 201	ORNAMENT, Deck Lid Lower (23-19-114)
	1	152 260	Nut
18	1	2255 220	NAME PLATE, Deck Lid (23-19-114)
	2	152 259	Nut

REF. NO.	QTY	PART NUMBER	DESCRIPTION
19	1	2275 320-1	MOULDING PACKAGE, Quarter Panel Rear (23-23-39)
	4	6000 808	Clip
	4	152 259	Nut
20	1	2275 330-1	MOULDING PACKAGE, Quarter Panel Center (23-23-39)
	12	6000 891	Clip
	4	6000 940	Clip
	2	6017 008	Clip
	2	441 239	Nut
21	2	2298 708	MOULDING PACKAGE, Quarter Panel Belt (23-23-39)
	4	6000 817	Clip
22	1	2298 656-7	MOULDING PACKAGE, Quarter Panel Front (23-23-39)
	8	6001 050	Retainer
23	2	2242 121	INSERT, Quarter Panel Front Moulding (23-23-85)
24	1	2243 824-5	PANEL, Lock Pillar Upper Finish (23-23-16)
	6	274 114	Screw
25	1	2298 646-7	MOULDING PACKAGE, Door Lower (23-23-32)
	14	6001 050	Clip
	2	6001 211	Clip
	2	151 497	Nut

Part Type Code is Indicated in Parentheses **19x9326B**

MOULDINGS - VALIANT V200 SV1(H) CLUB SEDAN

MyMopar.com

CODE	PART NAME AND DESCRIPTION	CYL.	PER CAR	VALIANT LANCER	PLYMOUTH DODGE	CHRYSLER IMPERIAL

NOTES

MyMopar.com

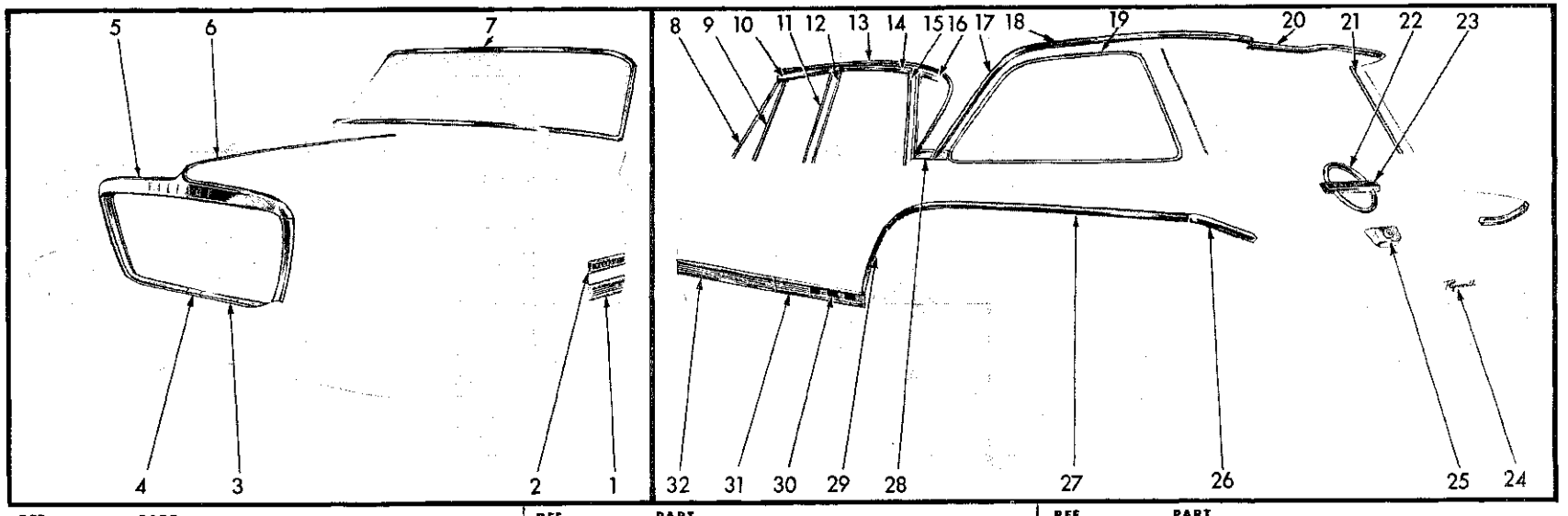

REF. NO.	QTY	PART NUMBER	DESCRIPTION
1	1	2298 654-5	MOULDING PACKAGE, Fender Side Lower (12-15-2)
	2	6001 050	Retainer
	2	6001 211	Clip
	2	151 497	Nut
2	2	2242 119	NAME PLATE, Fender Side (12-15-21)
	4	---- ---	Nut
	2	6000 960	Clip
3	1	2242 328-9	FRAME, Radiator Grille (7-16-36)
	4	120 375	Nut
	2	161 439	Screw
4	1	2242 170	CAP, Radiator Grille Frame (7-16-44)
5	1	2275 301	MOULDING PACKAGE, Hood Front (15-25-2)
	2	1839 995	J-Nut
	2	107 261	Screw
6	1	2298 653	MOULDING PACKAGE, Hood Center (15-25-2)
	6	6001 250	Clip
7	1	2082 278	LOCKINGSTRIP, Windshield Glass Weatherstrip Mylar (23-66-239)
8	1	2081 876-7	MOULDING, Front Door Window Frame Front (23-23-32)
9	2	2189 708-9	MOULDING, Front Door Vent Wing Division Channel (23-23-36)
10	1	2081 878-9	MOULDING, Front Door Window Frame Upper (23-23-32)
11	1	2081 880-1	MOULDING, Front Door Window Frame Rear (23-23-32)
12	1	2081 882-3	MOULDING, Rear Door Window Frame Front (23-23-33)
13	1	2081 906-7	MOULDING, Drain Trough (23-59-61)

All Packages Include Attaching Parts

REF. NO.	QTY	PART NUMBER	DESCRIPTION
14	1	2081 884-5	MOULDING, Rear Door Window Frame Upper (23-23-33)
15	1	2081 886-7	MOULDING, Rear Door Window Frame Rear (23-23-33)
16	1	2243 268-9	LOCKINGSTRIP, Quarter Window Glass Weatherstrip Mylar (23-63-110)
17	1	2196 628-9	MOULDING PACKAGE, Roof Panel Outside Finish Side Front (23-23-42)
	2	6017 013	Retainer
	2	151 497	Nut & Washer
	8	6017 010	Clip
	2	161 798	Screw
18	1	2196 626-7	MOULDING PACKAGE, Roof Panel Outside Finish Side Rear (23-23-42)
	2	161 798	Screw
	4	6017 010	Clip
19	2	2243 513	LOCKINGSTRIP, Quarter Window Glass Weatherstrip Mylar (23-63-110)
20	1	2196 624	MOULDING PACKAGE, Roof Panel Outside Finish Rear (23-23-42)
	4	161 798	Screw
	4	6017 010	Clip
21	1	2196 608-9	MOULDING PACKAGE, Rear Upper Pillar Outside Finish (23-23-60)
	*	6006 451	Clip
22	1	2242 202	ORNAMENT, Tailgate (23-54-11)
	3	---- ---	Washer
	3	9414 977	Nut
23	1	2243 276	NAME PLATE, Tailgate (23-54-11)
	3	6006 263	Nut
24	1	2255 220	NAME PLATE, Tailgate Plymouth (23-54-11)
	3	9415 250	Nut

REF. NO.	QTY	PART NUMBER	DESCRIPTION
25	1	2196 621	ORNAMENT PACKAGE, Tailgate Electric Window Lift (23-54-11)
	3	271 166	Nut and Washer
26	1	2275 320-1	MOULDING PACKAGE, Quarter Panel Rear (23-23-39)
	4	6000 808	Clip
	4	152 259	Nut
27	1	2275 318-9	MOULDING PACKAGE, Quarter Panel Front (23-23-39)
	10	6000 891	Clip
	4	6000 940	Clip
	2	6017 008	Clip
	2	151 497	Nut
28	1	2275 197-8	MOULDING PACKAGE, Roof Panel Outside Finish Side Extension (23-23-42)
	4	2259 189	Seal
	4	152 260	Nut
29	1	2275 328-9	MOULDING PACKAGE, Rear Door Rear (23-23-33)
	2	6017 004	Clip
	2	6017 005	Clip
	2	9415 921	Screw
30	2	2242 121	INSERT, Rear Door Outside Panel Front Moulding (Tape) (23-23-80)
31	1	2298 644-5	MOULDING PACKAGE, Rear Door Front (23-23-33)
	8	6001 050	Retainer 2 151 497 Nut
	2	6001 211	Clip
32	1	2298 650-1	MOULDING PACKAGE, Front Door Lower (23-23-32)
	12	6001 050	Retainer
	2	6001 211	Clip
	2	151 497	Nut

Part Type Code is Indicated in Parentheses **19x9291C**

MOULDINGS - VALIANT V200 SV1(H) SUBURBAN

MyMopar.com

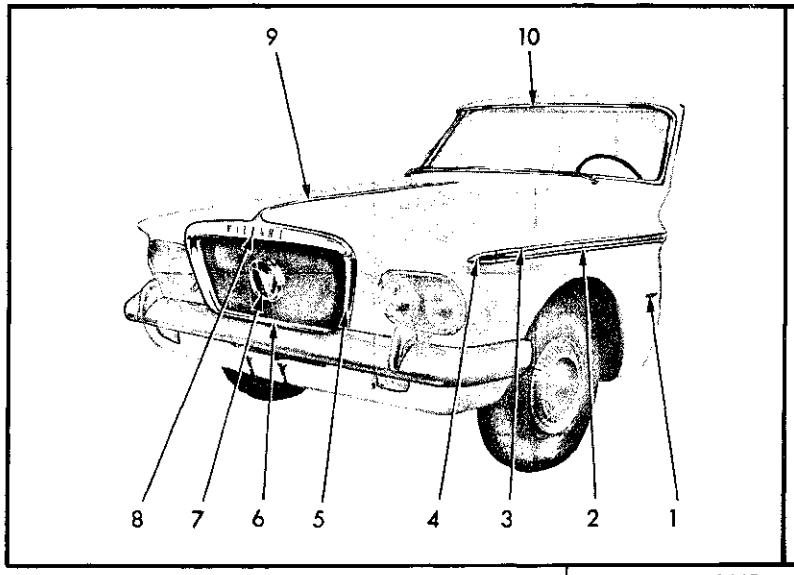

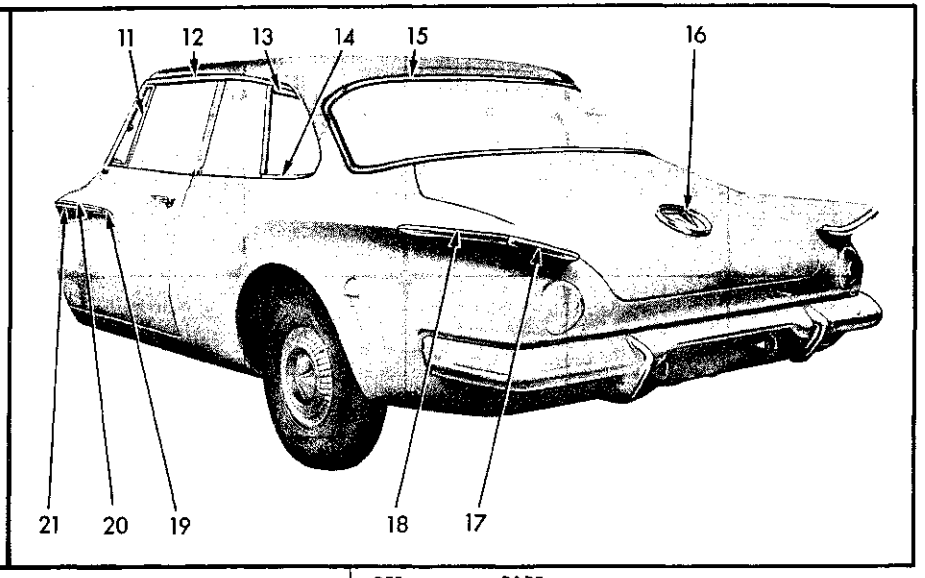

REF. NO.	QTY	PART NUMBER	DESCRIPTION
1	2	2276 730	NAME PLATE, Fender Side (12-15-21)
	4	6000 808	Clip
2	1	2299 366-7	MOULDING PACKAGE, Fender Side Lower (12-15-2)
	2	6006 520	Retainer
	2	6000 637	Nut
	14	6001 019	Clip
3	1	2299 364-5	MOULDING PACKAGE, Fender Side Upper (12-15-2)
	4	6001 030	Retainer
	4	152 259	Nut
	14	6001 019	Clip
4	1	2299 368-9	MOULDING PACKAGE, Fender Side Upper to Lower (12-15-2)
	2	---- ---	Seal
	2	9415 250	Nut
5	1	2242 328-9	FRAME, Radiator Grille (7-16-36)
	4	120 375	Nut
	2	161 439	Screw
6	1	2242 170	CAP, Radiator Grille Frame (7-16-44)
7	1	2276 590	ORNAMENT, Radiator Grille (7-17-1)
	3	446 059	Nut
8	1	2275 301	MOULDING PACKAGE, Hood Front (15-25-2)
	2	107 261	Screw
	2	1839 995	J-Nut
9	1	2298 653	MOULDING PACKAGE, Hood Center (15-25-2)
	6	6001 250	Clip
10	1	2082 278	LOCKINGSTRIP, Windshield Glass Weatherstrip (23-66-239)
11	4	2189 707	MOULDING, Door Vent Wing Division Channel (23-23-36)
12	1	2081 902-3	MOULDING, Roof Side Drain Trough (23-59-61)
13	1	2195 964-5	MOULDING, Quarter Window Outside Upper (23-23-73)
14	1	2195 836-7	MOULDING, Quarter Window Outside Finish Rear (23-23-73)
15	1	2082 278	LOCKINGSTRIP, Rear Window Glass Weather-strip (23-63-114)
16	1	2244 297	MEDALLION, Deck Lid (23-19-114)
	4	6006 263	Nut
17	1	2275 320-1	MOULDING PACKAGE, Quarter Panel Rear (23-23-39)
	4	6000 808	Clip
	4	152 259	Nut
18	1	2275 316-7	MOULDING PACKAGE, Quarter Panel Front (23-23-39)
	2	6017 008	Clip
	2	151 497	Nut
	4	6000 940	Clip
	6	6000 941	Clip
19	1	2298 733-4	CAP, Door Outside Panel Upper and Lower Moulding (23-23-41)
	2	---- ---	Seal
	2	9415 250	Nut
20	1	2298 735-6	MOULDING PACKAGE, Door Upper (23-23-32)
	6	6001 019	Clip
	2	6006 520	Retainer
	2	6000 637	Nut
21	1	2299 350-1	MOULDING PACKAGE, Door Lower (23-23-32)
	6	6001 019	Clip
	2	6006 520	Retainer
	2	6000 637	Nut

All Packages Include Attaching Parts

Part Type Code is Indicated in Parentheses

19x9309

MOULDINGS - VALIANT SV1(P) SPECIAL CLUB COUPE

MyMopar.com

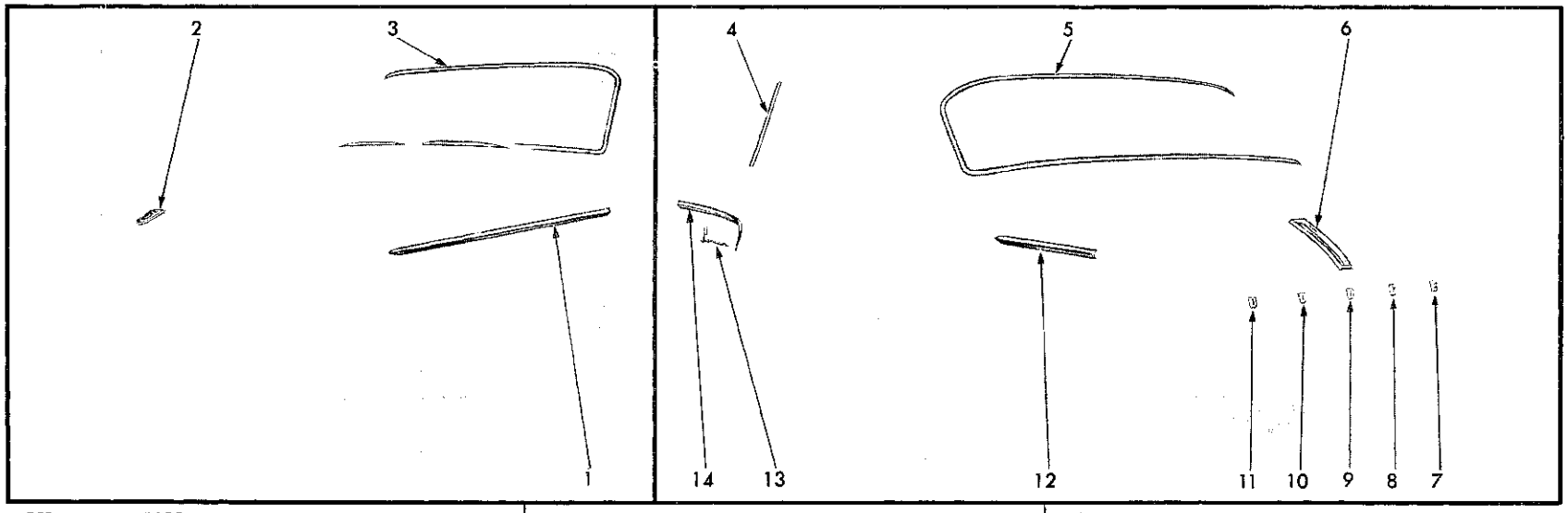

REF. NO.	QTY	PART NUMBER	DESCRIPTION
1	1	2240 858-9	MOULDING PACKAGE, Fender Side Upper (12-15-2)
	10	6000 949	Clip
	2	6000 951	Clip
	2	151 497	Nut
2	1	2099 835	MEDALLION, w/Insert, Hood (15-06-6)
	2	6000 050	Clip
3	1	2082 278	LOCKINGSTRIP, Windshield Glass Weather-strip (23-66-239)
4	2	2189 708-9	MOULDING, Door Vent Wing Division Channel (23-23-36)
5	1	2082 278	LOCKINGSTRIP, Rear Window Glass Weather-strip (23-63-114)
6	1	2242 139	MEDALLION, Deck Lid (23-19-114)
	3	6022 850	Washer
	3	9415 250	Nut
7	1	2240 810	LETTER "E" PACKAGE, Deck Lid (23-19-114)
	2	6000 937	Clip
8	1	2240 809	LETTER "G" PACKAGE, Deck Lid (23-19-114)
	2	6000 937	Clip
9	1	2242 198	LETTER "D", Deck Lid (23-19-114)
	2	6000 937	Clip
10	1	2240 807	LETTER "O" PACKAGE, Deck Lid (23-19-114)
	2	6000 937	Clip
11	1	2240 806	LETTER "D" PACKAGE, Deck Lid (23-19-114)
	2	6000 937	Clip
12	1	2275 316-7	MOULDING PACKAGE, Quarter Panel (23-23-39)
	2	6017 008	Clip
	2	151 497	Nut
	4	6000 940	Clip
13	2	2242 966	NAME PLATE, Front Door (23-11-21)
	8	6000 937	Clip
14	1	2240 750-1	MOULDING PACKAGE, Front Door (23-23-32)
	8	6000 949	Clip
	2	6000 908	Clip

All Packages Include Attaching Parts

Part Type Code is Indicated in Parentheses **19x9332**

MOULDINGS - LANCER 170 SL1(L) 4 DOOR SEDAN

MyMopar.com

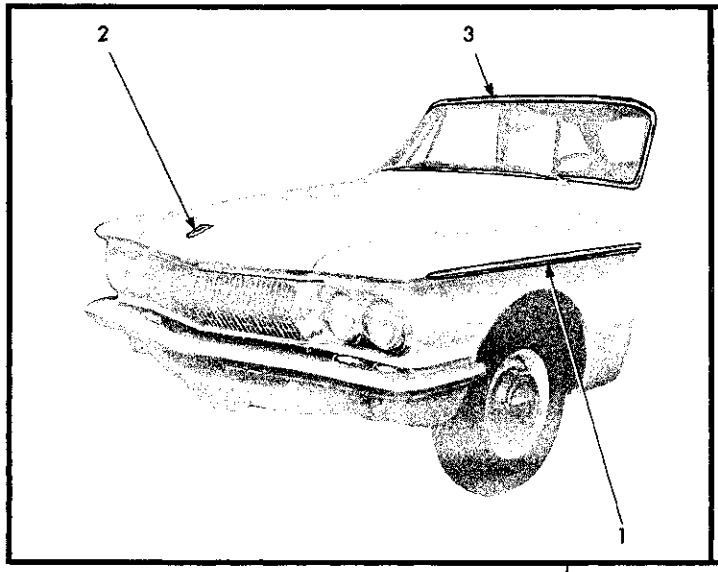

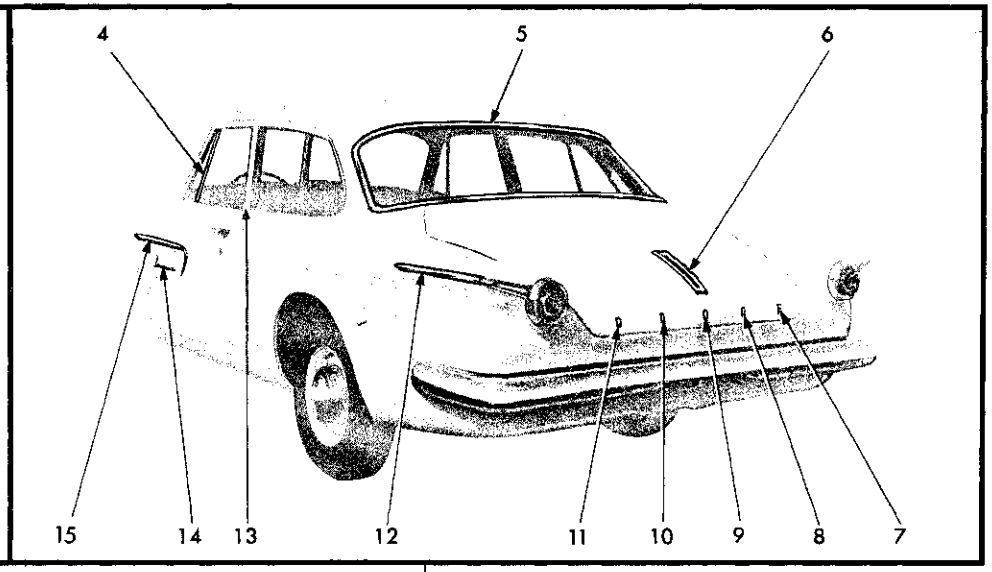

REF. NO.	QTY	PART NUMBER	DESCRIPTION
1	1	2240 858-9	MOULDING PACKAGE, Fender Side Upper (12-15-2)
	10	6000 949	Clip
	2	6000 951	Clip
	2	151 497	Nut
2	1	2099 835	MEDALLION, w/Insert, Hood (15-06-6)
	2	6000 050	Clip
3	1	2082 278	LOCKINGSTRIP, Windshield Glass Weather-strip (23-66-239)
4	2	2189 708-9	MOULDING, Door Vent Wing Division Channel (23-23-36)
5	1	2082 278	LOCKINGSTRIP, Rear Window Glass Weather-strip (23-63-114)
6	1	2242 139	MEDALLION, Deck Lid (23-19-114)
	3	6022 850	Washer
	3	9415 250	Nut
7	1	2240 810	LETTER "E" PACKAGE, Deck Lid (23-19-114)
	2	6000 937	Clip
8	1	2240 809	LETTER "G" PACKAGE, Deck Lid (23-19-114)
	2	6000 937	Clip
9	1	2242 198	LETTER "D", Deck Lid (23-19-114)
	2	6000 937	Clip
10	1	2240 807	LETTER "O" PACKAGE, Deck Lid (23-19-114)
	2	6000 937	Clip
11	1	2240 806	LETTER "D" PACKAGE, Deck Lid (23-19-114)
	2	6000 937	Clip
12	1	2275 316-7	MOULDING PACKAGE, Quarter Panel (23-23-39)
	2	6017 008	Clip
	2	151 497	Nut
	4	6000 940	Clip
13	1	2243 824-5	PANEL, Lock Pillar Upper Finish (23-23-16)
	6	274 114	Screw
14	2	2242 966	NAME PLATE, Door (23-11-21)
	8	6000 937	Clip
15	1	2240 750-1	MOULDING PACKAGE, Door (23-23-32)
	8	6000 949	Clip
	2	6000 908	Clip

All Packages Include Attaching Parts

Part Type Code is Indicated in Parentheses

19x9331A

MOULDINGS - LANCER 170 SL1(L) CLUB SEDAN

MyMopar.com

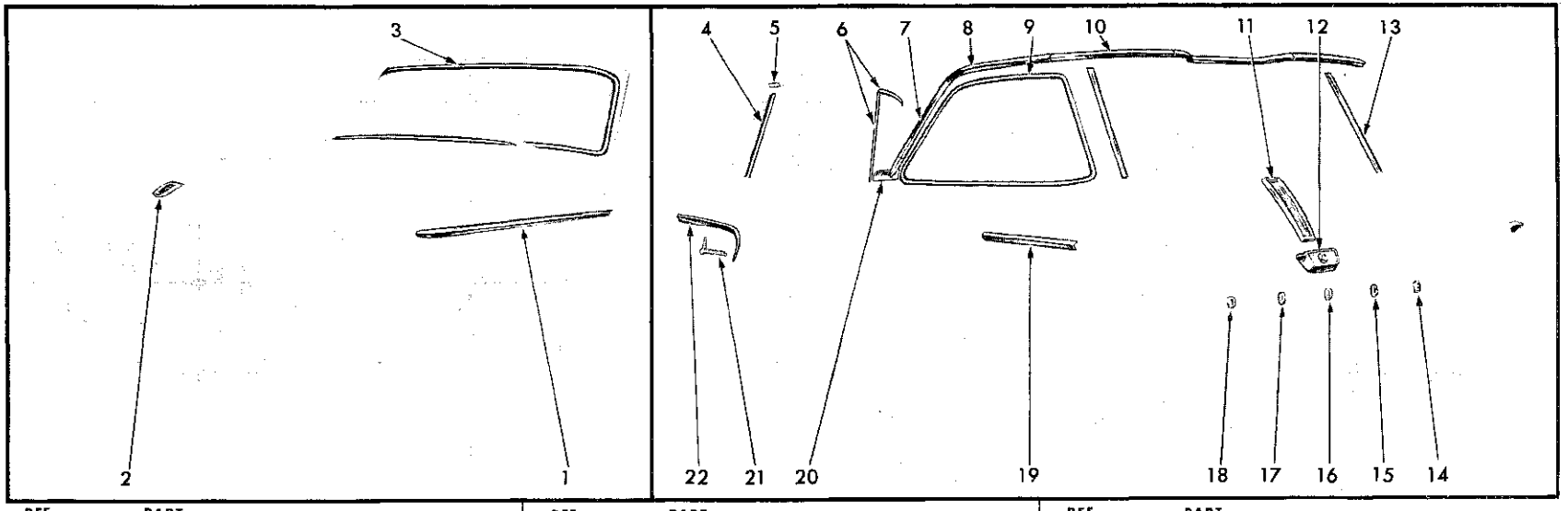

REF. NO.	QTY	PART NUMBER	DESCRIPTION
1	1	2240 858-9	MOULDING PACKAGE, Fender Side Upper (12-15-2)
	10	6000 949	Clip
	2	6000 951	Clip
	2	151 497	Nut
2	1	2099 835	MEDALLION, w/Insert, Hood (15-06-6)
	2	6000 050	Clip
3	1	2082 278	LOCKINGSTRIP, Windshield Glass Weather-strip (23-66-239)
4	2	2189 708-9	MOULDING, Door Vent Wing Division Channel (23-23-36)
5	2	2082 798	CAP, Roof Side Drain Trough Joint (23-59-57)
6	1	2243 268-9	LOCKINGSTRIP, Quarter Window Glass Weather-strip Mylar (23-63-110)
7	1	2196 628-9	MOULDING PACKAGE, Roof Panel Side Front (23-23-42)
	2	6017 013	Retainer
	2	151 497	Nut
	8	6017 010	Clip
	2	161 798	Screw
8	1	2196 626-7	MOULDING PACKAGE, Roof Panel Side Rear (23-23-42)
	2	161 798	Screw
	4	6017 010	Clip
9	2	2243 513	LOCKINGSTRIP, Quarter Window Glass Weather-strip Mylar (23-63-110)
10	1	2196 624	MOULDING PACKAGE, Roof Panel Rear (23-23-42)
	4	161 798	Screw
	4	6017 010	Clip
11	1	2242 188	MEDALLION, Tailgate Outside Panel (23-54-11)
	1	6000 808	Clip
	2	274 750	Nut
12	1	2196 621	ORNAMENT PACKAGE, Tail Electric Window Lift (23-54-11)
	3	271 166	Nut and Washer
13	1	2196 608-9	MOULDING PACKAGE, Rear Upper Pillar (23-23-60)
	*	6006 451	Clip
14	1	2240 810	NAME LETTER "E" PACKAGE, Tailgate (23-54-11)
	2	6000 937	Clip
15	1	2240 809	NAME LETTER "G" PACKAGE, Tailgate (23-54-11)
	2	6000 937	Clip
16	1	2240 806	NAME LETTER "D" PACKAGE, Tailgate (23-54-11)
	2	6000 937	Clip
17	1	2240 807	NAME LETTER "O" PACKAGE, Tailgate (23-54-11)
	2	6000 937	Clip
18	1	2240 806	NAME LETTER "D" PACKAGE, Tailgate (23-54-11)
	2	6000 937	Clip
19	1	2275 316-7	MOULDING PACKAGE, Quarter Panel (23-23-39)
	2	6017 008	Clip
	2	151 497	Nut
	4	6000 940	Clip
20	1	2275 197-8	MOULDING PACKAGE, Roof Panel Side Extension (23-23-42)
	4	2259 189	Seal
	4	152 260	Nut
21	2	2242 966	NAME PLATE, Front Door (23-11-21)
	8	6000 937	Clip
22	1	2240 750-1	MOULDING PACKAGE, Front Door (23-23-32)
	8	6000 949	Clip
	2	6000 908	Clip

All Packages Include Attaching Parts

Part Type Code is Indicated in Parentheses **19x9323**

MOULDINGS - LANCER 170 SL1(L) 4 DOOR SUBURBAN

MyMopar.com

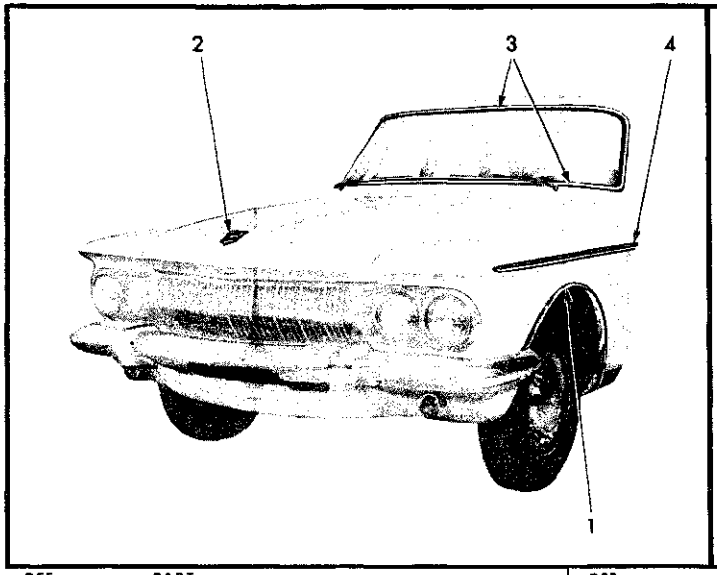

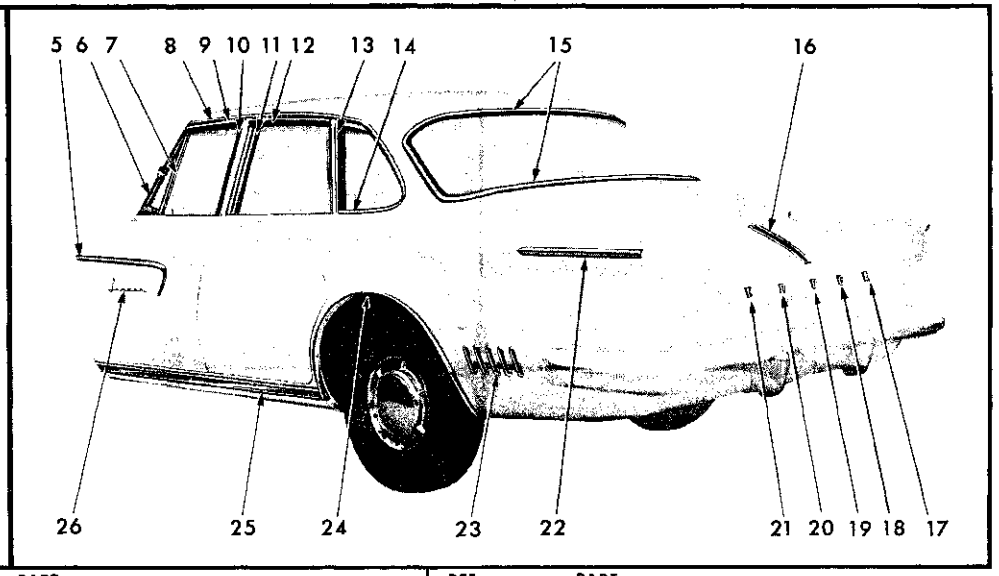

REF. NO.	QTY	PART NUMBER	DESCRIPTION
1	1	2275 322-3	MOULDING PACKAGE, Front Fender Wheel Opening (12-15-2)
	14	---- ---	Screw
2	1	2099 835	MEDALLION, w/Insert, Hood (15-06-6)
3	1	2082 278	LOCKINGSTRIP, Windshield Glass Weatherstrip (23-66-239)
4	1	2240 858-9	MOULDING PACKAGE, Front Fender (12-15-2)
	10	6000 949	Clip
	2	6000 951	Clip
	2	151 497	Nut
5	1	2240 750-1	MOULDING PACKAGE, Front Door (23-23-32)
	8	6000 949	Clip
	2	6000 908	Clip
6	1	2081 876-7	MOULDING, Front Door Front (23-23-32)
7	2	2189 708-9	MOULDING, Front Door Division Channel (23-23-36)
8	1	2081 902-3	MOULDING, Roof Side Drain Trough (23-59-61)
9	1	2081 878-9	MOULDING, Front Door Upper (23-23-32)
10	1	2081 880-1	MOULDING, Front Door Rear (23-23-32)
11	1	2081 882-3	MOULDING, Rear Door Front (23-23-33)
12	1	2081 884-5	MOULDING, Rear Door Upper (23-23-33)
13	1	2081 886-7	MOULDING, Rear Door Rear (23-23-33)
14	1	2243 272-3	LOCKINGSTRIP, Quarter Window Glass Weatherstrip (23-63-110)
15	1	2082 278	LOCKINGSTRIP, Rear Window Glass Weatherstrip (23-63-114)
16	1	2242 362	MEDALLION and INSERT, Deck Lid (23-19-114)
	3	6022 850	Washer
	3	9415 250	Nut
17	1	2240 810	LETTER "E" PACKAGE, Deck Lid (23-19-114)
	2	6000 937	Clip
18	1	2240 809	LETTER "G" PACKAGE, Deck Lid (23-19-114)
	2	6000 937	Clip
19	1	2242 198	LETTER "D", Deck Lid (23-19-114)
	2	6000 937	Clip
20	1	2240 807	LETTER "O" PACKAGE, Deck Lid (23-19-114)
	2	6000 937	Clip
21	1	2240 806	LETTER "D" PACKAGE, Deck Lid (23-19-114)
	2	6000 937	Clip
22	1	2275 316-7	MOULDING PACKAGE, Quarter Panel (23-23-39)
	2	6017 008	Clip
	2	151 497	Nut
	4	6000 940	Clip and Seal
	6	6000 941	Clip
23	1	2242 964-5	ORNAMENT, Quarter Outside Panel Louver (23-34-334)
	6	9415 250	Nut
24	1	2275 147-8	MOULDING PACKAGE, Quarter Panel Wheel Opening (23-23-39)
	16	---- ---	Screw
25	2	2275 149	MOULDING PACKAGE, Body Side Sill(23-23-2)
	16	6000 953	Clip
26	2	2242 966	NAME PLATE, Front Door (23-11-21)
	8	6000 937	Clip

All Packages Include Attaching Parts

Part Type Code is Indicated in Parentheses 19x9181B

MOULDINGS - LANCER 770 SL1(H) 4 DOOR SEDAN

MyMopar.com

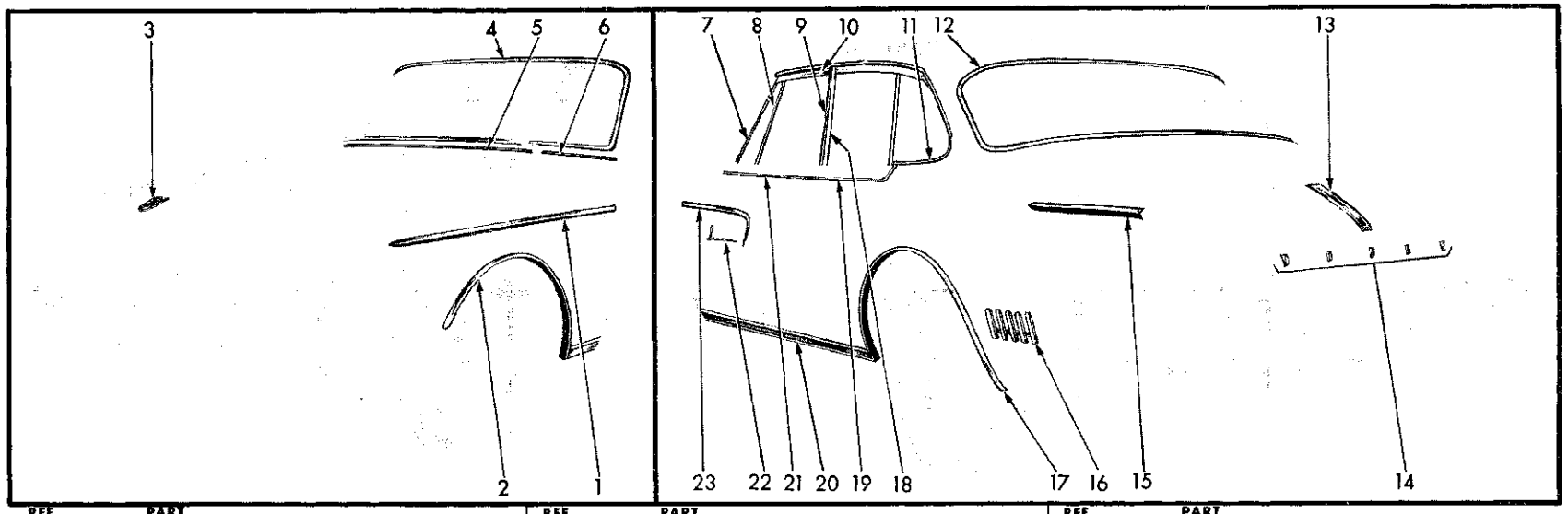

REF. NO.	QTY	PART NUMBER	DESCRIPTION
1	1	2240 858-9	MOULDING PACKAGE, Fender Side Upper (12-15-2)
	10	6000 949	Clip
	2	6000 951	Clip
	2	151 497	Nut
2	1	2275 322-3	MOULDING PACKAGE, Wheel Opening (12-15-2)
	14	---- ---	Screw
3	1	2099 835	MEDALLION, w/Insert, Hood (15-06-6)
4	1	2082 278	LOCKING STRIP, Windshield Glass Weatherstrip (23-66-239)
5	1	2240 817	MOULDING PACKAGE, Cowl Top Center (23-23-7)
	5	6017 000	Clip
6	1	2240 815-6	MOULDING PACKAGE, Cowl Top Side (23-23-7)
	6	6017 000	Clip
7	1	2081 876-7	MOULDING, Door Window Frame Front (23-23-32)
8	2	2189 708-9	MOULDING, Door Vent Wing Division Channel (23-23-36)
9	1	2081 882-3	MOULDING, Door Window Frame Rear (23-23-32)
10	1	2216 550-1	MOULDING, Door Window Frame Upper (23-23-32)
11	1	2195 836-7	MOULDING, Quarter Window Outside Finish Rear (23-23-73)
12	1	2082 278	LOCKING STRIP, Rear Window Glass Weather-strip (23-63-114)
13	1	2242 362	MEDALLION and INSERT, Deck Lid (23-19-114)
	3	6022 850	Washer
	3	9415 250	Nut
14	1	2240 806	LETTER "D" PACKAGE, Deck Lid (23-19-114)
	2	6000 937	Clip
	1	2240 807	LETTER "O" PACKAGE, Deck Lid (23-19-114)
	2	6000 937	Clip
	1	2242 198	LETTER "D", Deck Lid (23-19-114)
	2	6000 937	Clip
	1	2240 809	LETTER "G" PACKAGE, Deck Lid (23-19-114)
	2	6000 937	Clip
	1	2240 810	LETTER "E" PACKAGE, Deck Lid (23-19-114)
	2	6000 937	Clip
15	1	2275 316-7	MOULDING PACKAGE, Quarter Panel Upper (23-23-39)
	2	6017 008	Clip
	2	151 497	Nut
	4	6000 940	Clip
16	1	2242 964-5	ORNAMENT, Quarter Panel Louver (23-34-334)
	6	9415 250	Nut
17	1	2275 147-8	MOULDING PACKAGE, Quarter Panel Wheel Opening (23-23-39)
	16	---- ---	Screw
18	1	2243 824-5	PANEL, Lock Pillar Upper Finish (23-23-16)
	6	274 114	Screw
19	1	2240 804-5	MOULDING PACKAGE, Quarter Panel Belt (23-23-39)
	8	6000 817	Clip
20	2	2275 149	MOULDING PACKAGE, Body Side Sill (23-23-2)
	16	6000 953	Clip
21	1	2240 752-3	MOULDING PACKAGE, Door Belt (23-23-32)
	12	6000 816	Clip
	2	6017 000	Clip
22	2	2242 966	NAME PLATE, Door (23-11-21)
	10	6001 254	Clip
23	1	2240 750-1	MOULDING PACKAGE, Door (23-23-32)
	8	6000 949	Clip
	2	6000 908	Clip

All Packages Include Attaching Parts

Part Type Code is Indicated in Parentheses

19x9284B

MOULDINGS - LANCER 770 SL1(H) CLUB SEDAN

MyMopar.com

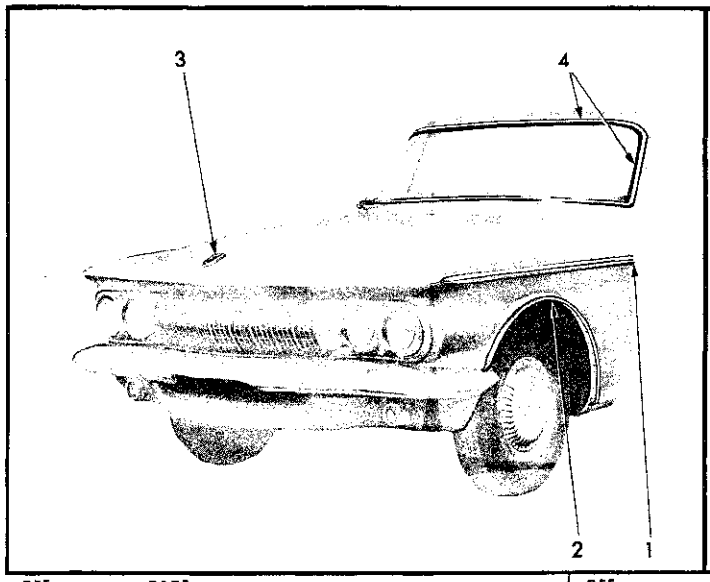

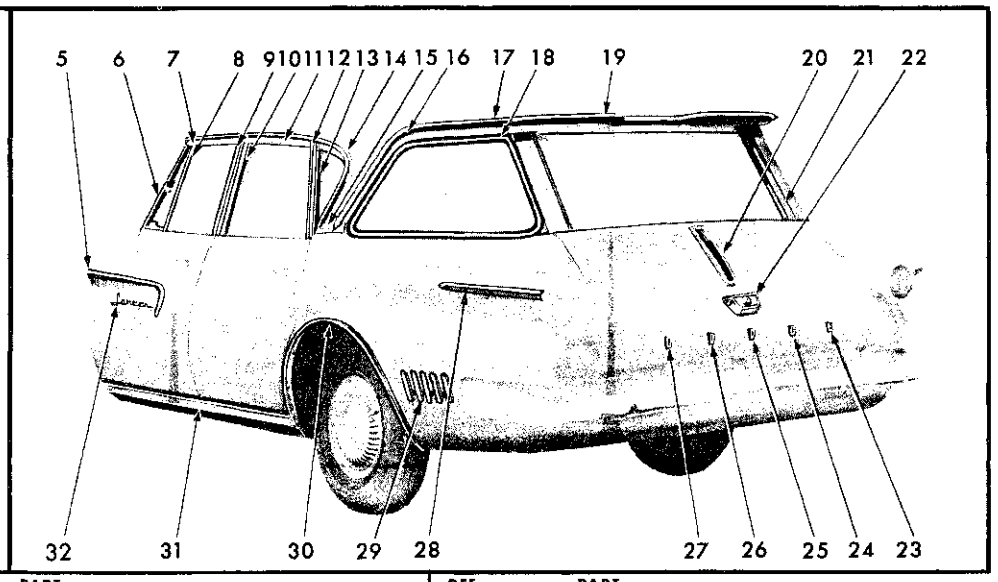

REF. NO.	QTY	PART NUMBER	DESCRIPTION
1	1	2240 858-9	MOULDING PACKAGE, Front Fender (12-15-2)
	10	6000 949	Clip
	2	6000 951	Clip
	2	151 497	Nut
2	1	2275 322-3	MOULDING PACKAGE, Front Fender Wheel Opening (12-15-2)
	14	---- ---	Screw
3	1	2099 835	MEDALLION, w/Insert, Hood Top (15-06-6)
	2	6000 050	Clip
4	1	2082 278	LOCKINGSTRIP, Windshield Glass Weatherstrip (23-66-239)
5	1	2240 750-1	MOULDING PACKAGE, Front Door Lower (23-23-32)
	8	6000 949	Clip
	2	6000 908	Clip
6	1	2081 876-7	MOULDING, Front Door Front (23-23-32)
7	1	2081 878-9	MOULDING, Front Door Upper (23-23-32)
8	2	2189 708-9	MOULDING, Front Door Vent Wing Division Channel (23-23-36)
9	1	2081 880-1	MOULDING, Front Door Rear (23-23-32)
10	1	2081 882-3	MOULDING, Rear Door Front (23-23-33)
11	1	2081 884-5	MOULDING, Rear Door Upper (23-23-33)
12	1	2081 886-7	MOULDING, Rear Door Rear (23-23-33)
13	1	2243 268-9	LOCKINGSTRIP, Front Quarter Window Glass Weather (23-63-110)
14	1	2081 906-7	MOULDING, Roof Side Drain Trough (23-59-61)
15	1	2275 197-8	MOULDING PACKAGE, Roof Panel Side Extension (23-23-42)
	4	2259 189	Seal
	4	152 260	Nut
16	1	2196 628-9	MOULDING PACKAGE, Roof Panel Outside Finish Side Front (23-23-42)
	2	6017 013	Retainer
	2	151 497	Nut and Washer
	8	6017 010	Clip
	2	161 798	Screw
17	1	2196 626-7	MOULDING PACKAGE, Roof Panel Outside Finish Side Rear (23-23-42)
	2	161 798	Screw
	4	6017 010	Clip
18	2	2243 513	LOCKINGSTRIP, Rear Quarter Window Glass Weatherstrip (23-63-110)
19	1	2196 624	MOULDING PACKAGE, Roof Panel Outside Finish Rear (23-23-42)
	4	161 798	Screw
	4	6017 010	Clip
20	1	2242 363	MEDALLION and INSERT, Tailgate (23-54-11)
	2	9415 250	Nut
	1	6000 808	Clip
21	1	2196 608-9	MOULDING PACKAGE, Rear Upper Pillar Outside Finish (23-23-60)
	*	6006 451	Clip
22	1	2196 621	ORNAMENT PACKAGE, Tailgate Outside Panel (23-54-11)
	3	151 497	Nut and Washer
23	1	2240 810	NAMELETTER "E" PACKAGE, Tailgate (23-54-11)
	2	6000 937	Clip
24	1	2240 809	NAMELETTER "G" PACKAGE, Tailgate (23-54-11)
	2	6000 937	Clip
25	1	2240 806	NAMELETTER "D" PACKAGE, Tailgate (23-54-11)
	2	6000 937	Clip
26	1	2240 807	NAMELETTER "O" PACKAGE, Tailgate (23-54-11)
	2	6000 937	Clip
27	1	2240 806	NAMELETTER "D" PACKAGE, Tailgate (23-54-11)
	2	6000 937	Clip
28	1	2275 316-7	MOULDING PACKAGE, Quarter Panel (23-23-39)
	2	6017 008	Clip
	2	151 497	Nut
	4	6000 940	Clip
	6	6000 941	Clip
29	1	2242 964-5	ORNAMENT, Quarter Panel Louver (23-34-334)
	6	9415 250	Nut
30	1	2275 147-8	MOULDING PACKAGE, Quarter Panel Wheel Opening (23-23-39)
	16	---- ---	Screw
31	2	2275 149	MOULDING PACKAGE, Body Side Sill (23-23-2)
	16	6000 953	Clip
32	2	2242 966	NAME PLATE, Front Door (23-11-21)
	8	6000 937	Clip

All Packages Include Attaching Parts

Part Type Code is Indicated in Parentheses 19x9182B

MOULDINGS - LANCER 770 SL1(H) SUBURBAN

MyMopar.com

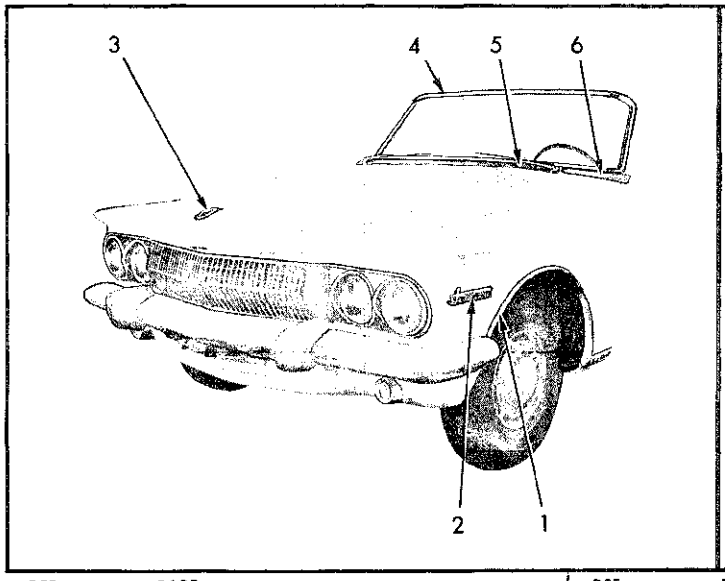

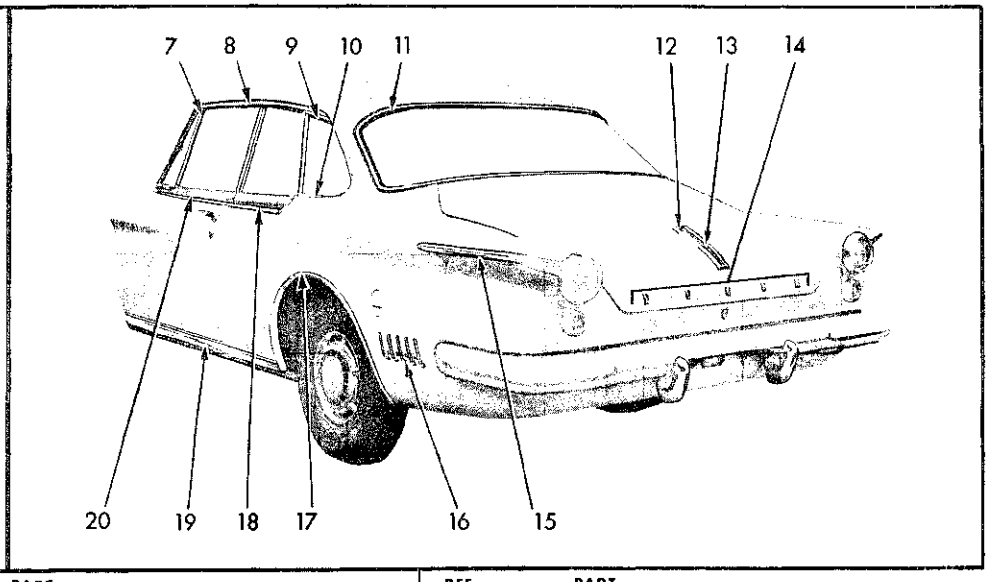

REF. NO.	QTY	PART NUMBER	DESCRIPTION
1	1	2275 322-3	MOULDING PACKAGE, Fender Wheel Opening (12-15-2)
	14	---- ---	Screw
2	2	2099 991	NAME PLATE, Fender Side (12-15-21)
	6	9415 250	Nut
3	1	2099 995	MEDALLION, w/Insert, Hood (15-06-6)
	2	6000 050	Clip
4	1	2082 278	LOCKINGSTRIP, Windshield Glass Weatherstrip Mylar (23-66-239)
5	1	2240 817	MOULDING PACKAGE, Cowl Top Center (23-23-7)
	5	6017 000	Clip
6	1	2240 815-6	MOULDING PACKAGE, Cowl Top Side (23-23-7)
	6	6017 000	Clip
7	4	2189 707	MOULDING, Door Vent Wing Division Channel (23-23-36)
8	1	2081 902-3	MOULDING, Roof Side Drain Trough (23-59-61)
9	1	2195 964-5	MOULDING, Quarter Window Outside Upper (23-23-73)
10	1	2195 836-7	MOULDING, Quarter Window Outside Finish Rear (23-23-73)
11	1	2082 278	LOCKINGSTRIP, Rear Window Glass Weather-strip Mylar (23-63-114)
12	1	2243 970	MEDALLION and INSERT, Deck Lid (23-19-114)
	3	6022 850	Washer
	3	9415 250	Nut
13	1	2243 907	INSERT, Deck Lid Medallion (23-19-128)
14	1	2240 806	LETTER "D" PACKAGE, Deck Lid (23-19-114)
	1	2240 807	LETTER "O" PACKAGE, Deck Lid
	1	2242 198	LETTER "D" PACKAGE, Deck Lid
	1	2240 809	LETTER "G" PACKAGE, Deck Lid
	1	2240 810	LETTER "E" PACKAGE, Deck Lid
	10	6000 937	Clip
15	1	2275 316-7	MOULDING PACKAGE, Quarter Panel Lower (23-23-39)
	6	6000 941	Clip
	4	6000 940	Clip
	2	6017 008	Clip
	2	151 497	Nut
16	1	2242 964-5	ORNAMENT, Quarter Panel Louver (23-34-334)
	6	9415 250	Nut
17	1	2275 147-8	MOULDING PACKAGE, Quarter Panel Wheel Opening (23-23-39)
	16	---- ---	Screw
18	1	2240 804-5	MOULDING PACKAGE, Quarter Panel Belt (23-23-39)
	8	6000 817	Clip
19	2	2275 149	MOULDING PACKAGE, Body Side Sill (23-23-2)
	16	6000 953	Clip
20	1	2240 752-3	MOULDING PACKAGE, Door Belt (23-23-32)
	12	6000 816	Clip
	2	6017 000	Clip

All Packages Include Attaching Parts

Part Type Code is Indicated in Parentheses **19x9306A**

MOULDINGS - LANCER SL1(P) SPECIAL CLUB COUPE

MyMopar.com

CODE	PART NAME AND DESCRIPTION	CYL.	PER CAR	VALIANT LANCER	PLYMOUTH DODGE	CHRYSLER IMPERIAL

NOTES

★ Indicates use as required.
⊟ Indicates parts not listed in any previous parts book.
November 30, 1961.

Printed in U.S.A.
Prices and specifications subject to change without notice.

MyMopar.com

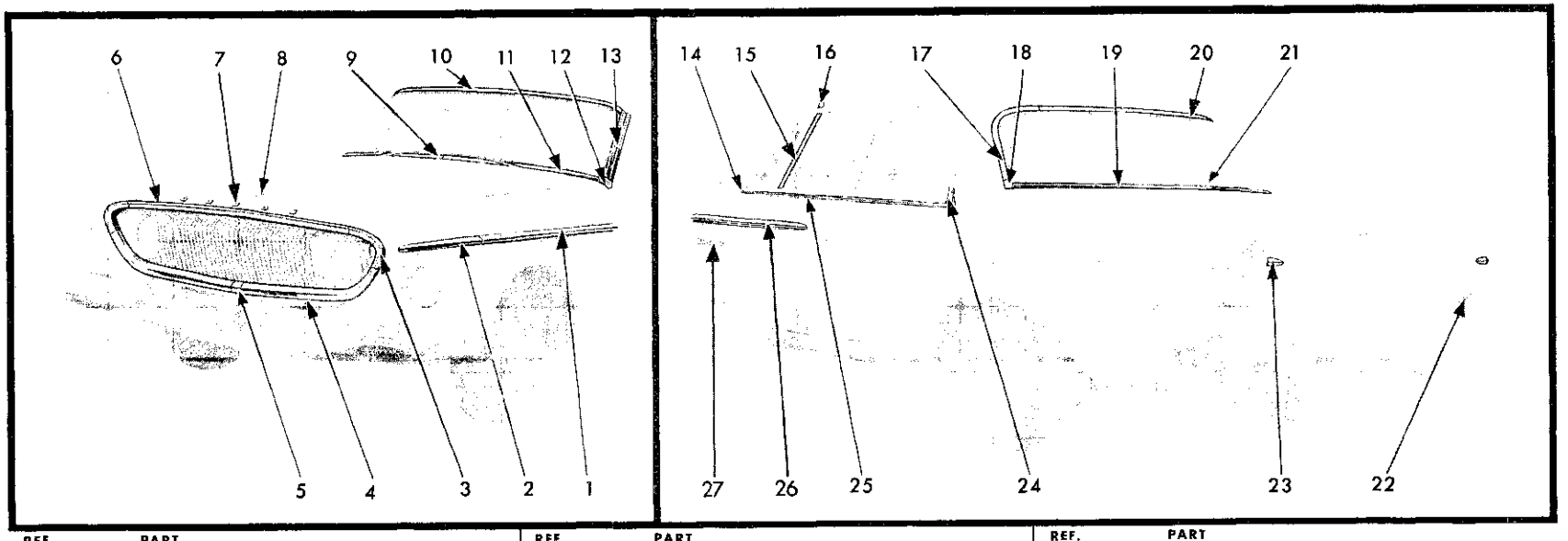

REF. NO.	QTY	PART NUMBER	DESCRIPTION
1	1	2298 678-9	MOULDING PACKAGE, Fender Side Rear (12-15-2)
	2	6001 236	Clip 8 6001 051 Retainer
	2	6000 993	Clip 8 6006 438 Nut
2	1	2298 676-7	MOULDING PACKAGE, Fender Side Front (12-15-2)
	2	6001 236	Clip
	4	6001 235	Clip
3	1	2298 683-4	MOULDING PACKAGE, Fender Front Upper (12-15-2)
	2	6000 963	Clip
	2	6001 225	Clip
	2	6001 227	Clip
4	1	2298 681-2	MOULDING PACKAGE, Radiator Grille Panel (7-16-36)
	8	6001 227	Clip
5	1	2298 680	COVER PACKAGE, Radiator Grille Panel Moulding Joint (7-16-44)
	1	---- ---	Nut
6	1	2298 675	MOULDING, Hood Front (15-25-2)
	4	6001 217	Clip
	4	273 329	Nut
7	2	2099 517	LETTER, Hood Front Name "D" (15-06-16)
	1	2099 518	"O"
	1	2099 519	"G"
	1	2099 520	"E"

REF. NO.	QTY	PART NUMBER	DESCRIPTION
8	1	2099 522	MEDALLION (15-06-6)
	6	6000 955	Nut
9	1	2254 524	COVER, Windshield Outside Finish Lower Moulding Joint (23-23-66)
10	1	2298 552	MOULDING PACKAGE, Windshield Outside Finish Upper (23-23-65)
	8	6000 966	Retainer
11	1	2298 571-2	MOULDING PACKAGE, Windshield Outside Finish Lower (23-23-65)
	10	6000 966	Retainer
12	1	2166 970-1	MOULDING, Windshield Outside Finish Lower End (23-23-65)
13	1	2166 966-7	MOULDING, Windshield Outside Finish Side (23-23-65)
14	1	2298 713-4	MOULDING PACKAGE, Front Door Belt Front (23-23-32)
	2	9416 282	Screw
15	4	2254 031	MOULDING, Front Door Vent Wing Division Channel (23-23-36)
16	2	2166 909	COVER, Roof Side Drain Trough Joint (23-59-57)
17	1	2298 554-5	MOULDING PACKAGE, Rear Window Outside Finish Side (23-23-52)
	6	6000 966	Retainer
18	1	2254 066-7	COVER, Rear Window Outside Finish Side to Lower Moulding Joint (23-23-41)

REF. NO.	QTY	PART NUMBER	DESCRIPTION
19	1	2421 206	MOULDING PACKAGE, Rear Window Outside Finish Lower (23-23-52)
	10	6000 966	Retainer
20	1	2298 556	MOULDING PACKAGE, Rear Window Outside Finish Upper (23-23-52)
	5	6000 966	Retainer
21	1	2254 524	COVER, Rear Window Outside Finish Lower Moulding (23-23-41)
22	1	2254 773	NAME PLATE, Deck Opening Lower Panel (23-34-184)
	3	152 259	Nut and Washer
23	1	2275 920-1	MOULDING PACKAGE, Deck Lid (23-23-30)
	4	441 256	Nut
24	1	2298 709-10	MOULDING PACKAGE, Rear Door Belt (23-23-33)
	10	---- ---	Clip
25	1	2298 702-3	MOULDING PACKAGE, Front Door Belt Rear (23-23-32)
	12	6001 031	Clip
26	1	2275 943-4	MOULDING PACKAGE, Front Door Lower (23-23-32)
	6	6000 993	Clip
	4	6000 951	Clip
	4	151 497	Nut
27	2	2254 642	NAME PLATE, Front Door (23-11-21)
	6	6000 050	Clip

All Packages Include Attaching Parts

Part Type Code is Indicated in Parentheses **19x9204B**

MOULDINGS - DART SD1-2(L) 4 DOOR SEDAN

MyMopar.com

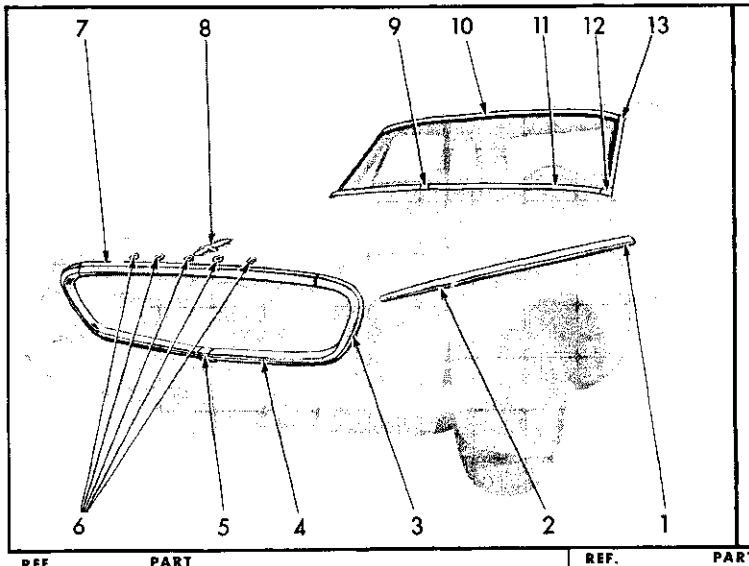

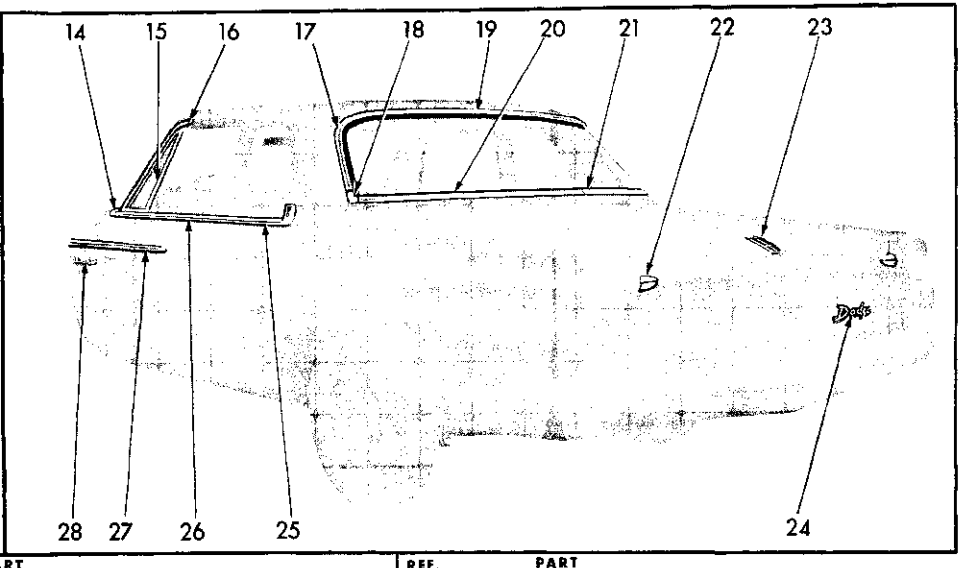

REF. NO.	QTY	PART NUMBER	DESCRIPTION
1	1	2298 678-9	MOULDING PACKAGE, Fender Side Rear (12-15-2)
	2	6001 236	Clip
	8	6001 051	Retainer
	2	6000 993	Clip
	8	6006 438	Nut
2	1	2298 676-7	MOULDING PACKAGE, Fender Side Front (12-15-2)
	6	6001 236	Clip
3	1	2298 683-4	MOULDING PACKAGE, Fender Front Upper (12-15-2)
	2	6000 963	Clip
	2	6001 225	Clip
	2	6001 227	Clip
4	1	2298 681-2	MOULDING PACKAGE, Radiator Grille Lower Panel (7-16-36)
	8	6001 227	Clip
5	1	2298 680	COVER, Radiator Grille Lower Panel Moulding Joint (7-16-44)
6	2	2099 517	LETTER, Hood Front "D" (15-06-16)
	1	2099 518	"O" (15-06-16)
	1	2099 519	"G" (15-06-16)
	1	2099 520	"E" (15-06-16)
	8	6000 616	Nut
7	1	2298 675	MOULDING PACKAGE, Hood Front (15-25-2)
8	1	2099 522	MEDALLION, Hood (15-06-6)
	2	6000 955	Nut
9	1	2254 524	COVER, Windshield Outside Finish Lower Moulding Joint (23-23-66)
10	1	2298 552	MOULDING PACKAGE, Windshield Outside Finish Upper (23-23-65)
	8	6000 966	Retainer
11	1	2298 571-2	MOULDING PACKAGE, Windshield Outside Finish Lower (23-23-65)
	10	6000 966	Retainer
12	1	2166 970-1	MOULDING, Windshield Outside Finish Lower End (23-23-65)
13	1	2166 966-7	MOULDING, Windshield Outside Finish Side (23-23-65)
14	1	2298 713-4	MOULDING PACKAGE, Door Belt Front (23-23-32)
	2	9416 282	Screw
15	4	2254 031	MOULDING, Door Vent Wing Division Channel (23-23-36)
16	2	2166 909	COVER, Roof Side Drain Trough Joint (23-59-57)
17	1	2298 554-5	MOULDING PACKAGE, Rear Window Outside Finish Side (23-23-52)
	6	6000 966	Retainer
18	1	2254 066-7	COVER, Rear Window Outside Finish Side to Lower Mldg. Joint (23-23-41)
19	1	2298 556	MOULDING PACKAGE, Rear Window Outside Finish Upper (23-23-52)
	5	6000 966	Retainer
20	1	2421 206	MOULDING PACKAGE, Rear Window Outside Finish Lower (23-23-52)
	10	6000 966	Retainer
21	1	2254 524	COVER, Rear Window Outside Finish Lower Mldg. Joint (23-23-41)
22	1	2275 920-1	MOULDING PACKAGE, Deck Lid (23-23-30)
	4	441 256	Nut
23	1	2167 974	MEDALLION, Deck Lid (23-19-114)
	2	6000 960	Clip
24	1	2254 773	NAME PLATE, Deck Opening Lower Panel (23-34-184)
	3	152 259	Nut & Washer
25	1	2298 711-2	MOULDING PACKAGE, Quarter Panel Belt (23-23-39)
	8	6001 031	Clip
26	1	2298 704-5	MOULDING PACKAGE, Door Belt Rear (23-23-32)
	14	---- ---	Clip
27	1	2275 943-4	MOULDING PACKAGE, Door Lower (23-23-32)
	6	6000 993	Clip
	4	6000 951	Clip
	4	151 497	Nut
28	2	2254 642	NAME PLATE, Door (23-23-11)
	6	6000 050	Clip

All Packages Include Attaching Parts

Part Type Code is Indicated in Parentheses

19x9255B

MOULDINGS - DART SD1-2(L) CLUB SEDAN

MyMopar.com

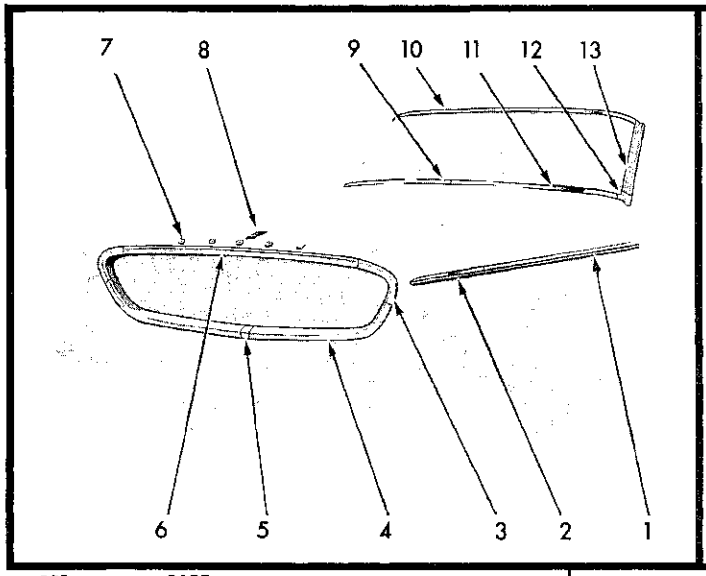

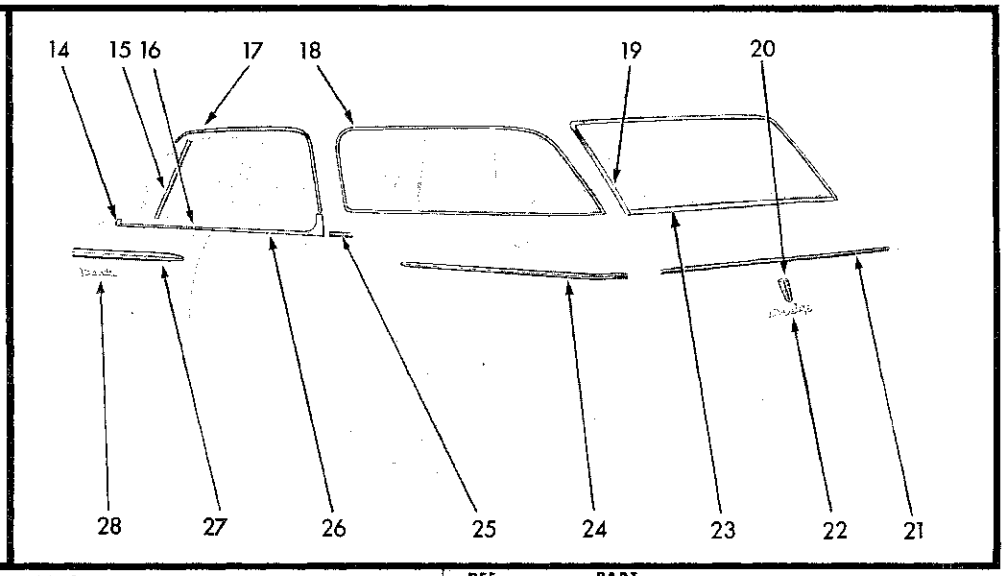

REF. NO.	QTY	PART NUMBER	DESCRIPTION
1	1	2298 678-9	MOULDING PACKAGE, Fender Side Rear (12-15-2)
	2	6001 236	Clip
	2	6000 993	Clip
	8	6001 051	Retainer
	8	6006 438	Nut
2	1	2298 676-7	MOULDING PACKAGE, Fender Side Front (12-15-2)
	2	6001 236	Clip
	4	6001 235	Clip
3	1	2298 683-4	MOULDING PACKAGE, Fender Front Upper (12-15-2)
	2	6000 963	Clip
	2	6001 225	Clip
	2	6001 227	Clip
4	1	2298 681-2	MOULDING PACKAGE, Radiator Grille Panel (7-16-36)
	8	6001 227	Clip
5	1	2298 680	COVER PACKAGE, Radiator Grille Panel Moulding Joint (7-16-44)
	1	---- ---	Nut
6	1	2298 675	MOULDING, Hood Front (15-25-2)
	4	6001 217	Clip
	4	---- ---	Nut
7	2	2099 517	LETTER, Hood Front "D" (15-06-16)
	1	2099 518	"O" (15-06-16)
	1	2099 519	"G" (15-06-16)
	1	2099 520	"E" (15-06-16)
	10	6000 616	Nut
8	1	2099 522	MEDALLION, Hood (15-06-6)
	2	6000 955	Nut

All Packages Include Attaching Parts

REF. NO.	QTY	PART NUMBER	DESCRIPTION
9	1	2254 524	COVER, Windshield Outside Finish Lower Moulding Joint (23-23-66)
10	1	2298 552	MOULDING PACKAGE, Windshield Outside Finish Upper (23-23-65)
	8	6000 966	Retainer
11	1	2298 571-2	MOULDING PACKAGE, Windshield Outside Finish Lower (23-23-65)
	10	6000 966	Retainer
12	1	2166 970-1	MOULDING, Windshield Outside Finish Lower End (23-23-65)
13	1	2166 966-7	MOULDING, Windshield Outside Finish Side (23-23-65)
14	1	2298 713-4	MOULDING PACKAGE, Front Door Belt Front (23-23-32)
	2	9416 282	Screw
15	4	2254 031	MOULDING, Front Door Vent Wing Division Channel (23-23-36)
16	1	2298 702-3	MOULDING PACKAGE, Front Door Belt Rear (23-23-32)
	12	6001 071	Clip
17	2	2166 909	COVER, Roof Drain Trough Joint (23-59-57)
18	1	2254 918-9	LOCKINGSTRIP, Quarter Window Glass Weatherstrip Mylar (23-63-110)
19	1	2251 802-3	MOULDING, Tailgate Opening Rear Upper Pillar Outside Finish (23-23-60)
20	1	2251 810	MEDALLION, Tailgate Outside Panel (23-54-11)
	2	1839 995	Nut

REF. NO.	QTY	PART NUMBER	DESCRIPTION
21	1	2275 949	MOULDING PACKAGE, Tailgate Outside Panel (23-23-61)
	5	6001 033	Clip
	2	6001 020	Clip
	2	151 497	Nut
22	1	2254 773	NAME PLATE, Tailgate Outside Panel Dodge Script (23-54-11)
	3	1839 995	Nut
23	1	2275 995	MOULDING PACKAGE, Tailgate Outside Panel Belt (23-23-61)
	2	125 978	Screw
	7	6001 232	Clip
24	1	2275 304-5	MOULDING PACKAGE, Quarter Panel (23-23-39)
	12	6000 137	Clip
	2	6010 093	Clip
	2	151 497	Nut
25	1	2299 374	MOULDING PACKAGE, Quarter Panel Belt, Right (23-23-39)
	1	2299 399	MOULDING PACKAGE, Quarter Panel Belt, Left (23-23-39)
	4	6001 031	Clip
26	1	2298 709-10	MOULDING PACKAGE, Rear Door Belt (23-23-33)
	10	6001 031	Clip
27	1	2275 943-4	MOULDING PACKAGE, Front Door Lower (23-23-32)
	6	6000 993	Clip
	4	6000 951	Clip
	4	151 497	Nut
28	2	2254 642	NAME PLATE, Front Door (23-11-21)
	6	6000 050	Clip

Part Type Code is Indicated in Parentheses **19x9269B**

MOULDINGS - DART SD1-2(L) SUBURBAN

MyMopar.com

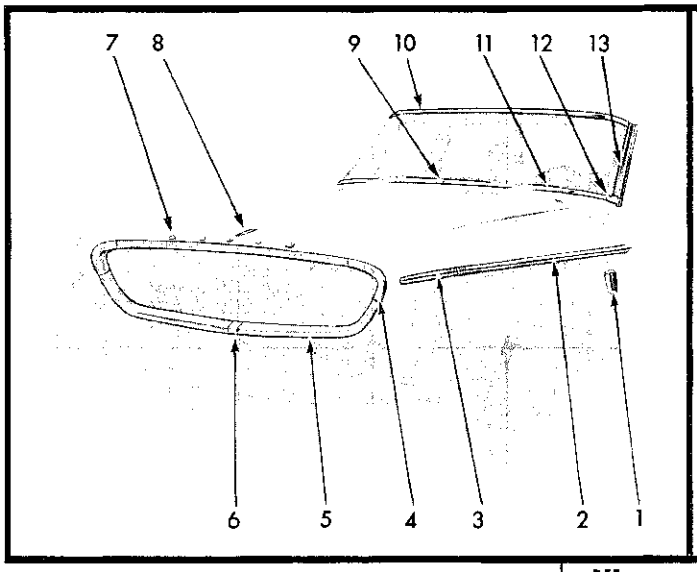

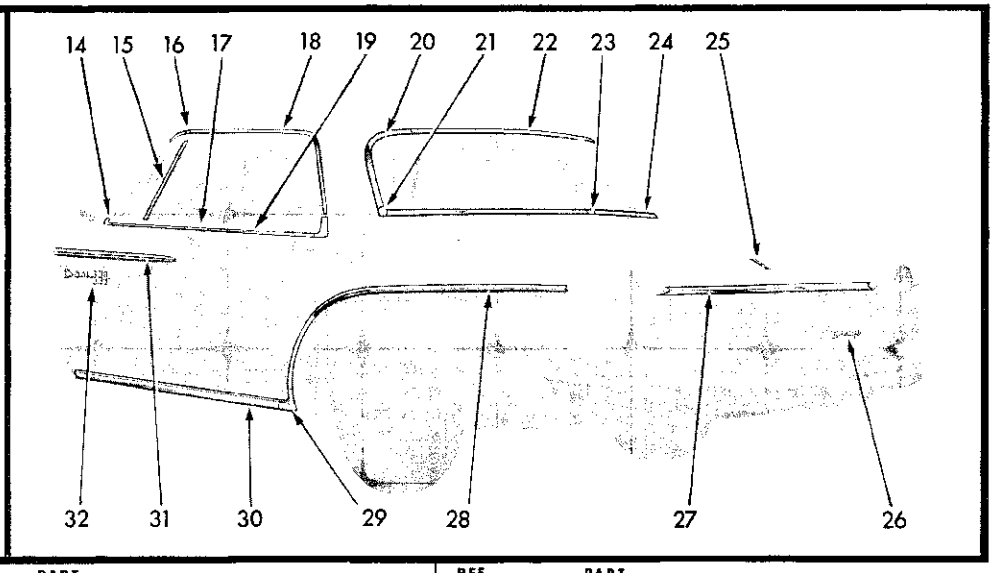

REF. NO.	QTY	PART NUMBER	DESCRIPTION
1	2	2099 550	MEDALLION, Fender Side (12-15-21)
	4	6000 955	Nut
2	1	2298 678-9	MOULDING PACKAGE, Fender Side Rear (12-15-2)
	2	6001 236	Clip
	2	6000 993	Clip
	8	6001 051	Retainer
	8	6006 438	Nut
3	1	2298 676-7	MOULDING PACKAGE, Fender Side Front (12-15-2)
	2	6001 236	Clip
	4	6001 235	Clip
4	1	2298 683-4	MOULDING PACKAGE, Fender Front Upper (12-15-2)
	2	6000 963	Clip
	2	6001 225	Clip
	2	6001 227	Clip
5	1	2298 681-2	MOULDING PACKAGE, Radiator Grille Panel (7-16-36)
	8	6001 227	Clip
6	1	2298 680	COVER PACKAGE, Radiator Grille Panel Moulding Joint (7-16-44)
	1	---- ---	Nut
7	2	2099 517	LETTER, Hood Front "D" (15-06-16)
	1	2099 518	"O" (15-06-16)
	1	2099 519	"G" (15-06-16)
	1	2099 520	"E" (15-06-16)
	10	6000 616	Nut
8	1	2099 522	MEDALLION, Hood (15-06-6)
	2	6000 955	Nut
9	1	2254 524	COVER, Windshield Outside Finish Lower Moulding Joint (23-23-66)
10	1	2298 552	MOULDING PACKAGE, Windshield Outside Finish Upper (23-23-65)
	8	6000 966	Retainer

All Packages Include Attaching Parts

REF. NO.	QTY	PART NUMBER	DESCRIPTION
11	1	2298 571-2	MOULDING PACKAGE, Windshield Outside Finish Lower (23-23-65)
	10	6000 966	Retainer
12	1	2166 970-1	MOULDING, Windshield Outside Finish Lower End (23-23-65)
13	1	2166 966-7	MOULDING, Windshield Outside Finish Side (23-23-65)
14	1	2298 713-4	MOULDING PACKAGE, Front Door Belt Front (23-23-32)
	2	9416 282	Screw
15	4	2254 031	MOULDING, Front Door Vent Wing Division Channel (23-23-36)
16	1	2254 314-5	CAP, Roof Side Drain Trough Moulding Front End (23-59-57)
17	1	2298 702-3	MOULDING PACKAGE, Front Door Belt Rear (23-23-32)
	12	6001 071	Clip
18	1	2216 090-1	MOULDING, Roof Side Drain Trough (23-59-61)
19	1	2298 709-10	MOULDING PACKAGE, Rear Door Belt (23-23-32)
	10	6001 031	Clip
20	1	2298 554-5	MOULDING PACKAGE, Rear Window Outside Finish Side (23-23-52)
	6	6000 966	Retainer
21	1	2254 066-7	COVER, Rear Window Outside Finish Side to Lower Mldg. Joint (23-23-41)
22	1	2298 556	MOULDING PACKAGE, Rear Window Outside Finish Upper (23-23-52)
	5	6000 966	Retainer
23	1	2254 524	COVER, Rear Window Outside Finish Lower Moulding Joint (23-23-41)

REF. NO.	QTY	PART NUMBER	DESCRIPTION
24	1	2421 206	MOULDING PACKAGE, Rear Window Outside Finish Lower (23-23-52)
	10	6000 966	Retainer
25	1	2167 974	MEDALLION, Deck Lid (23-19-114)
	2	6000 960	Clip
26	1	2254 773	NAME PLATE, Deck Opening Lower Panel (23-34-184)
	3	152 259	Nut & Washer
27	1	2275 919	MOULDING PACKAGE, Deck Lid (23-23-30)
	6	6000 996	Retainer
	6	441 256	Nut
28	1	2275 947-8	MOULDING PACKAGE, Quarter Panel Rear (23-23-39)
	2	6001 007	Retainer
	8	6001 009	Retainer
	4	6001 008	Retainer
	6	---- ---	Nut
29	1	2254 122-3	MOULDING, Quarter Panel Front (23-23-39)
	2	161 895	Screw
30	1	2275 945-6	MOULDING PACKAGE, Body Side Sill (23-23-2)
	10	6000 995	Retainer
	2	6023 331	Screw
31	1	2275 943-4	MOULDING PACKAGE, Front Door Lower (23-23-32)
	6	6000 993	Clip
	4	6000 951	Clip
	4	151 497	Nut
32	2	2254 643	NAME PLATE, Front Door (23-11-21)
	6	6000 050	Clip

Part Type Code is Indicated in Parentheses **19x9267B**

MOULDINGS - DART 330 SD1-2(M) 4 DOOR SEDAN

MyMopar.com

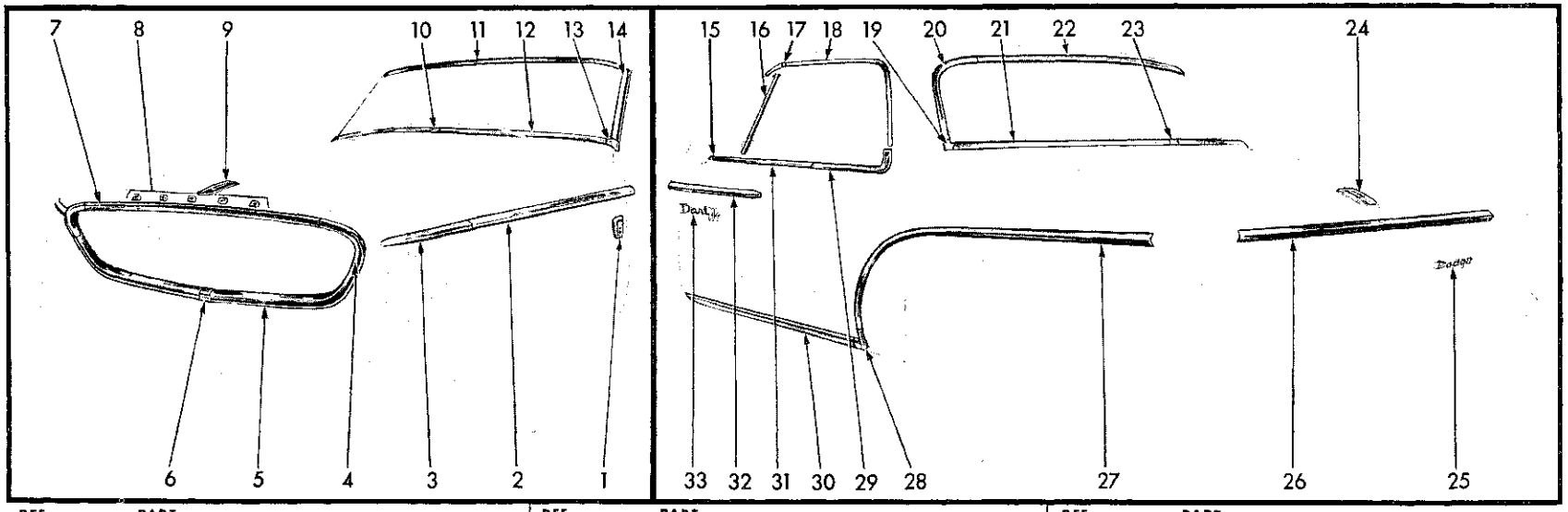

REF. NO.	QTY	PART NUMBER	DESCRIPTION
1	2	2099 550	MEDALLION, Fender Side (12-15-21)
	4	6000 955	Nut
2	1	2298 678-9	MOULDING PACKAGE, Fender Side Rear (12-15-2)
	2	6001 236	Clip
	8	6001 051	Retainer
	2	6000 993	Clip
	8	6006 438	Nut
3	1	2298 676-7	MOULDING PACKAGE, Fender Side Front (12-15-2)
	6	6001 236	Clip
4	1	2298 683-4	MOULDING PACKAGE, Fender Front Upper (12-15-2)
	2	6000 963	Clip
	2	6001 225	Clip
	2	6001 227	Clip
5	1	2298 681-2	MOULDING PACKAGE, Grille Lower Panel (7-16-36)
	8	6001 227	Clip
6	1	2298 680	COVER, Grille Lower Panel Moulding Joint (7-16-44)
	1	---- ---	Nut
7	1	2298 675	MOULDING PACKAGE, Hood Front (15-25-2)
	4	6001 217	Clip
	4	271 472	Nut
8	2	2099 517	LETTER, Hood Front, "D" (15-06-16)
	1	2099 518	"O" (15-06-16)
	1	2099 519	"G" (15-06-16)
	1	2099 520	"E" (15-06-16)
9	1	2099 522	MEDALLION, Hood (15-06-6)
	2	6000 955	Nut
10	1	2254 524	COVER, Windshield Outside Finish Lower Moulding (23-23-66)

All Packages Include Attaching Parts

REF. NO.	QTY	PART NUMBER	DESCRIPTION
11	1	2298 552	MOULDING PACKAGE, Windshield Outside Finish Upper (23-23-65)
	8	6000 966	Retainer
12	1	2298 571-2	MOULDING PACKAGE, Windshield Outside Finish Lower (23-23-65)
	10	6000 966	Retainer
13	1	2166 970-1	MOULDING, Windshield Outside Finish Lower End (23-23-65)
14	1	2166 966-7	MOULDING, Windshield Outside Finish Side (23-23-65)
15	1	2298 713-4	MOULDING PACKAGE, Door Belt Front (23-23-32)
	2	9416 282	Screw
16	4	2254 031	MOULDING, Door Vent Wing Division Channel (23-23-36)
17	1	2254 314-5	CAP, Roof Side Drain Trough Moulding Front End Cap (23-59-57)
18	1	2216 090-1	MOULDING, Roof Side Drain Trough (23-59-61)
19	1	2254 066-7	COVER, Rear Window Outside Finish Side to Lower Mldg. Joint (23-23-41)
20	1	2298 554-5	MOULDING PACKAGE, Rear Window Outside Finish Side (23-23-52)
	6	6000 966	Retainer
21	1	2421 206	MOULDING PACKAGE, Rear Window Outside Finish Lower (23-23-52)
	10	6000 966	Retainer
22	1	2298 556	MOULDING PACKAGE, Rear Window Outside Finish Upper (23-23-52)
	5	6000 966	Retainer
23	1	2254 524	COVER, Rear Window Outside Lower Moulding Joint (23-23-41)

REF. NO.	QTY	PART NUMBER	DESCRIPTION
24	1	2167 974	MEDALLION, Deck Lid (23-19-114)
	2	6000 960	Clip
25	1	2254 773	NAME PLATE, Deck Opening Lower Panel (23-34-184)
	3	152 259	Nut & Washer
26	1	2275 919	MOULDING PACKAGE, Deck Lid (23-23-30)
	6	6000 996	Retainer
	6	441 256	Nut
27	1	2275 947-8	MOULDING PACKAGE, Quarter Panel Lower Rear (23-23-39)
	8	6001 009	Retainer
	4	6001 008	Retainer
	2	6001 007	Retainer
	6	---- ---	Nut
28	1	2254 122-3	MOULDING, Quarter Panel Lower Front (23-23-39)
	2	161 895	Screw
29	1	2298 711-2	MOULDING PACKAGE, Quarter Panel Belt (23-23-39)
	8	6001 019	Clip
30	1	2275 945-6	MOULDING PACKAGE, Side Sill (23-23-2)
	10	6000 995	Retainer
	2	6023 331	Screw
31	1	2298 704-5	MOULDING PACKAGE, Door Belt Rear (23-23-32)
	14	---- ---	Clip
32	1	2275 943-4	MOULDING PACKAGE, Door Lower (23-23-32)
	6	6000 993	Clip
	4	6000 951	Clip
	4	151 497	Nut
33	2	2254 643	NAME PLATE, Door (23-11-21)
	6	6000 050	Clip

Part Type Code is Indicated in Parentheses **19x9285A**

MOULDINGS - DART 330 SD1-2(M) CLUB SEDAN

MyMopar.com

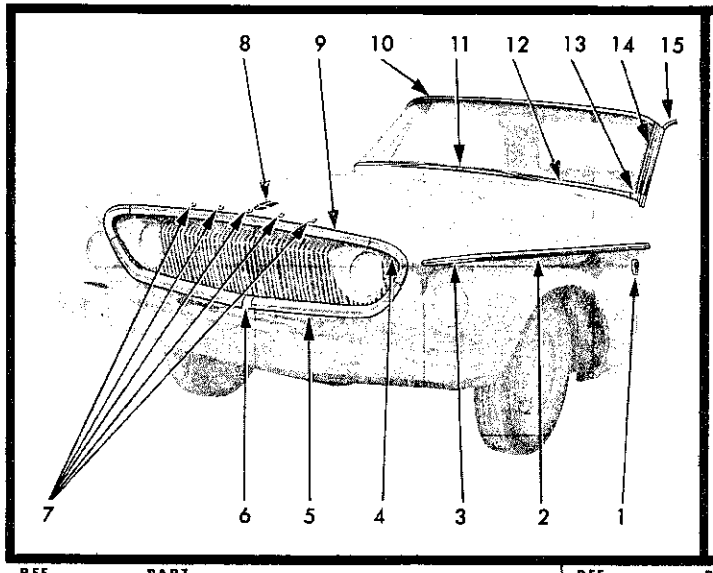

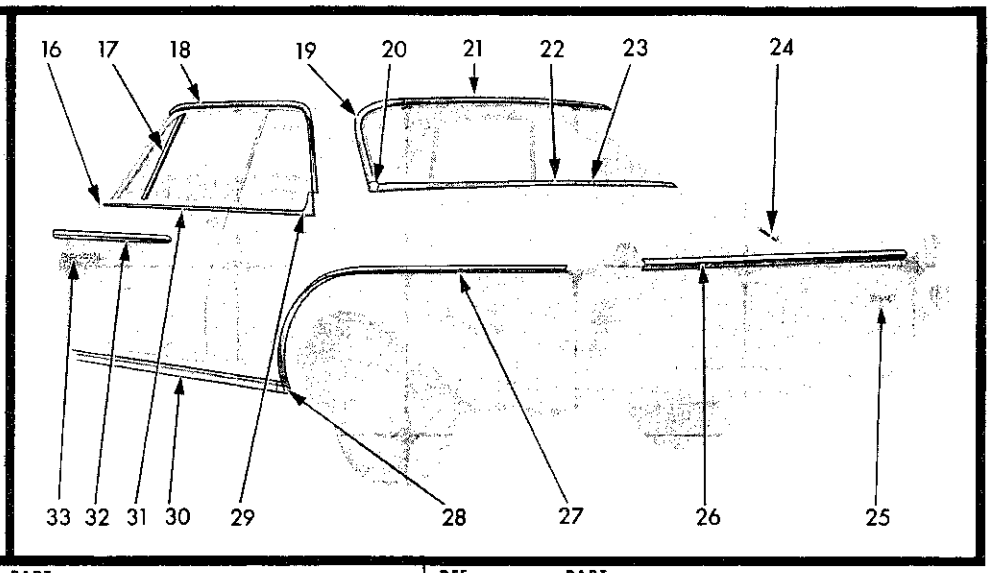

REF. NO.	QTY	PART NUMBER	DESCRIPTION
1	2	2099 550	MEDALLION, Fender Side (12-15-21)
	4	6000 955	Clip
2	1	2298 678-9	MOULDING PACKAGE, Fender Side Rear (12-15-2)
	2	6001 236	Clip 8 6001 051 Retainer
	2	6000 993	Clip 8 6006 438 Nut
3	1	2298 676-7	MOULDING PACKAGE, Fender Side Front (12-15-2)
	2	6001 236	Clip
	4	6001 235	Clip
4	1	2298 683-4	MOULDING PACKAGE, Fender Front Upper (12-15-2)
	2	6000 963	Clip
	2	6001 225	Clip
	2	6001 227	Clip
5	1	2298 681-2	MOULDING PACKAGE, Radiator Grille Panel (7-16-36)
	8	6001 227	Clip
6	1	2298 680	COVER PACKAGE, Radiator Grille Panel Moulding Joint (7-16-44)
	1	---- ---	Nut
7	2	2099 517	LETTER, Hood Front "D" (15-06-16)
	1	2099 518	"O"
	1	2099 519	"G"
	1	2099 520	"E"
	*	6000 616	Nut
8	1	2099 522	MEDALLION, Hood (15-06-6)
	2	6000 955	Nut
9	1	2298 675	MOULDING PACKAGE, Hood Front (15-25-2)
10	1	2298 552	MOULDING PACKAGE, Windshield Outside Finish Upper (23-23-65)
	8	6000 966	Retainer

All Packages Include Attaching Parts

REF. NO.	QTY	PART NUMBER	DESCRIPTION
11	1	2254 524	COVER, Windshield Outside Finish Lower Moulding Joint (23-23-66)
12	1	2298 571-2	MOULDING PACKAGE, Windshield Outside Finish Lower (23-23-65)
	10	6000 966	Retainer
13	1	2166 970-1	MOULDING, Windshield Outside Finish Lower End (23-23-65)
14	1	2166 966-7	MOULDING, Windshield Outside Finish Side (23-23-65)
15	1	2254 314-5	CAP, Roof Drain Trough Moulding Front End (23-59-57)
16	1	2298 713-4	MOULDING PACKAGE, Door Belt Front (23-23-32)
	2	9416 282	Screw
17	4	2254 031	MOULDING, Front Door Division Channel (22-23-36)
18	1	2216 090-1	MOULDING, Roof Side Drain Trough (23-59-61)
19	1	2298 554-5	MOULDING PACKAGE, Rear Window Outside Finish Side (23-23-52)
	6	6000 966	Retainer
20	1	2254 066-7	COVER, Rear Window Outside Finish Side to Lower Moulding Joint (23-23-41)
21	1	2298 556	MOULDING PACKAGE, Rear Window Outside Finish Upper (23-23-52)
	5	6000 966	Retainer
22	1	2421 206	MOULDING PACKAGE, Rear Window Outside Finish Lower (23-23-52)
	10	6000 966	Retainer
23	1	2254 524	COVER, Rear Window Outside Finish Lower Moulding Joint (23-23-41)
24	1	2167 974	MEDALLION, Deck Lid (23-19-114)
	2	6000 960	Clip

REF. NO.	QTY	PART NUMBER	DESCRIPTION
25	1	2254 773	NAME PLATE, Deck Opening Lower Panel (23-34-184)
	3	152 259	Nut and Washer
26	1	2275 919	MOULDING PACKAGE, Deck Lid (23-23-30)
27	1	2275 947-8	MOULDING PACKAGE, Quarter Panel Lower Rear (23-23-39)
	8	6001 009	Retainer
	2	6001 007	Retainer
	4	6001 008	Retainer
	6	---- ---	Nut
28	1	2254 122-3	MOULDING, Quarter Panel Lower Front, w/Retainer (23-23-39)
	2	161 895	Screw
29	1	2298 711-2	MOULDING PACKAGE, Quarter Panel Belt (23-23-39)
	8	---- ---	Clip
30	1	2275 945-6	MOULDING PACKAGE, Body Side Sill (23-23-2)
	10	6000 995	Retainer
	2	6023 331	Screw
31	1	2298 704-5	MOULDING PACKAGE, Door Belt Rear (23-23-32)
	14	---- ---	Clip
32	1	2275 943-4	MOULDING PACKAGE, Door Lower (23-23-32)
	6	6000 993	Clip
	4	6000 951	Clip
	4	151 497	Nut
33	2	2254 643	NAME PLATE, Door (23-11-21)
	6	6000 050	Clip

Part Type Code is Indicated in Parentheses **19x9196A**

MOULDINGS - DART 330 SD1-2(M) SPECIAL CLUB COUPE

MyMopar.com

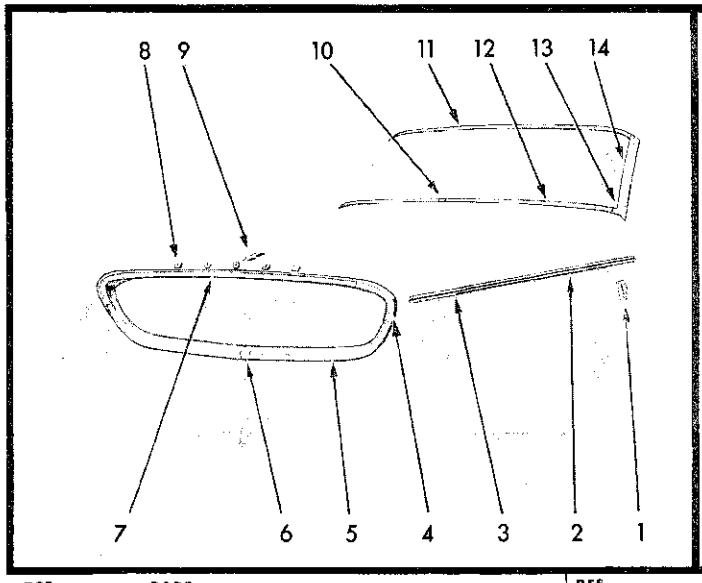

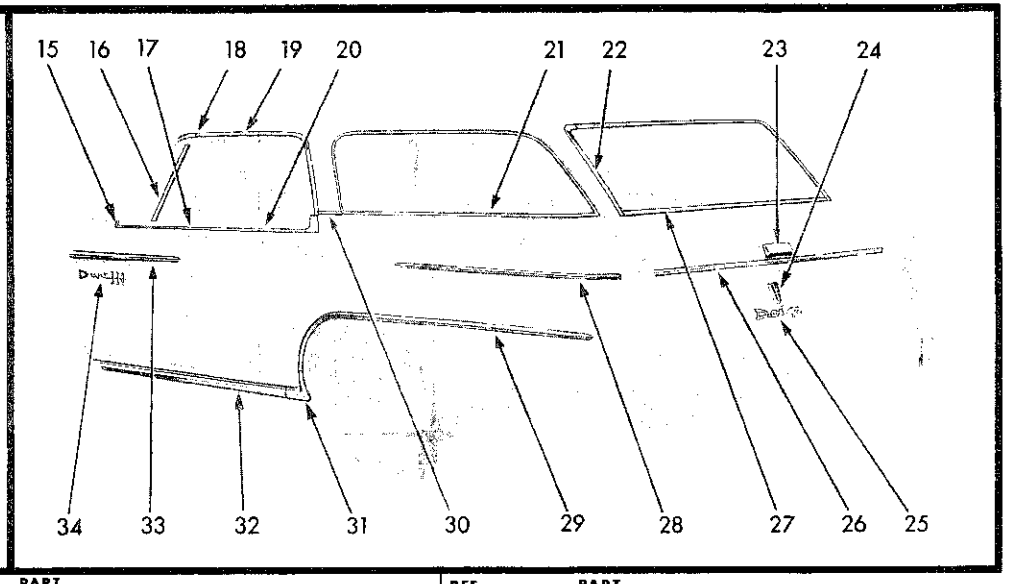

REF. NO.	QTY	PART NUMBER	DESCRIPTION
1	2	2099 550	MEDALLION, Fender Side (12-15-21)
	4	6000 955	Nut
2	1	2298 678-9	MOULDING PACKAGE, Fender Side Rear (12-15-2)
	2	6001 236	Clip 8 6001 051 Retainer
	2	6000 993	Clip 8 6006 438 Nut
3	1	2298 676-7	MOULDING PACKAGE, Fender Side Front (12-15-2)
	2	6001 236	Clip
	4	6001 235	Clip
4	1	2298 683-4	MOULDING PACKAGE, Fender Front Upper (12-15-2)
	2	6000 963	Clip
	2	6001 225	Clip
	2	6001 227	Clip
5	1	2298 681-2	MOULDING PACKAGE, Radiator Grille Panel (7-16-36)
	8	6001 227	Clip
6	1	2298 680	COVER PACKAGE, Radiator Grille Panel Moulding Joint (7-16-44)
	1	---- ---	Nut
7	1	2298 675	MOULDING PACKAGE, Hood Front (15-25-2)
	4	6001 217	Clip
	4	---- ---	Nut
8	2	2099 517	LETTER, Hood Front "D" (15-06-16)
	1	2099 518	"O" (15-06-16)
	1	2099 519	"G" (15-06-16)
	1	2099 520	"E" (15-06-16)
	10	6000 616	Nut
9	1	2099 522	MEDALLION, Hood (15-06-6)
	2	6000 955	Nut
10	1	2254 524	COVER, Windshield Outside Finish Lower Moulding Joint (23-23-66)
11	1	2298 552	MOULDING PACKAGE, Windshield Outside Finish Upper (23-23-65)
	8	6000 966	Retainer
12	1	2298 571-2	MOULDING PACKAGE, Windshield Outside Finish Lower (23-23-65)
	10	6000 966	Retainer
13	1	2166 970-1	MOULDING, Windshield Outside Finish Lower End (23-23-65)
14	1	2166 966-7	MOULDING, Windshield Outside Finish Side (23-23-65)
15	1	2298 713-4	MOULDING PACKAGE, Front Door Belt Front (23-23-32)
	2	9416 282	Screw
16	4	2254 031	MOULDING, Front Door Vent Wing Division Channel (23-23-36)
17	1	2298 702-3	MOULDING PACKAGE, Front Door Belt Rear (23-23-32)
	12	6001 071	Clip
18	1	2254 314-5	CAP, Roof Side Drain Trough Moulding Front End (23-59-57)
19	1	2216 090-1	MOULDING, Roof Side Drain Trough (23-59-61)
20	1	2298 709-10	MOULDING PACKAGE, Rear Door Belt (23-23-33)
	10	6001 031	Clip
21	1	2254 918-9	LOCKINGSTRIP, Quarter Window Glass Weatherstrip Mylar (23-63-110)
22	1	2251 802-3	MOULDING, Tailgate Opening Rear Upper Pillar Outside Finish (23-23-60)
23	1	2251 373	ORNAMENT, Tailgate Electric Window Lift (23-54-11)
24	1	2251 810	MEDALLION, Tailgate Outside Panel (23-54-11)
	2	1839 995	Nut
25	1	2254 773	NAME PLATE, Tailgate Outside Panel Dodge Script (23-54-11)
	3	1839 995	Nut
26	1	2275 949	MOULDING PACKAGE, Tailgate Outside Panel (23-23-61)
	5	6001 033	Clip
	2	6001 020	Clip 2 151 497 Nut
27	1	2275 995	MOULDING PACKAGE, Tailgate Outside Panel Belt (23-23-61)
	2	125 978	Screw 7 6001 232 Clip
28	1	2275 304-5	MOULDING PACKAGE, Quarter Panel Upper (23-23-39)
29	1	2298 569-70	MOULDING PACKAGE, Quarter Panel Lower Rear (23-23-39)
	18	6000 486	Clip
30	1	2299 374	MOULDING PACKAGE, Quarter Panel Belt, Right (23-23-39)
	1	2299 399	MOULDING PACKAGE, Quarter Panel Belt, Left (23-23-39)
	4	6001 031	Clip
31	1	2275 900-1	MOULDING PACKAGE, Quarter Panel Lower Front (23-23-39)
	2	---- ---	Screw 2 ---- --- Nut
32	1	2275 945-6	MOULDING PACKAGE, Body Side Sill (23-23-2)
	10	6000 995	Retainer 2 6023 331 Screw
33	1	2275 943-4	MOULDING PACKAGE, Front Door Lower (23-23-32)
	6	6000 993	Clip
	4	6000 951	Clip
	4	151 497	Nut
34	2	2254 643	NAME PLATE, Door (23-11-21)
	6	6000 050	Clip

All Packages Include Attaching Parts

Part Type Code is Indicated in Parentheses **19x9270C**

MOULDINGS - DART 330 SD1-2(M) SUBURBAN

MyMopar.com

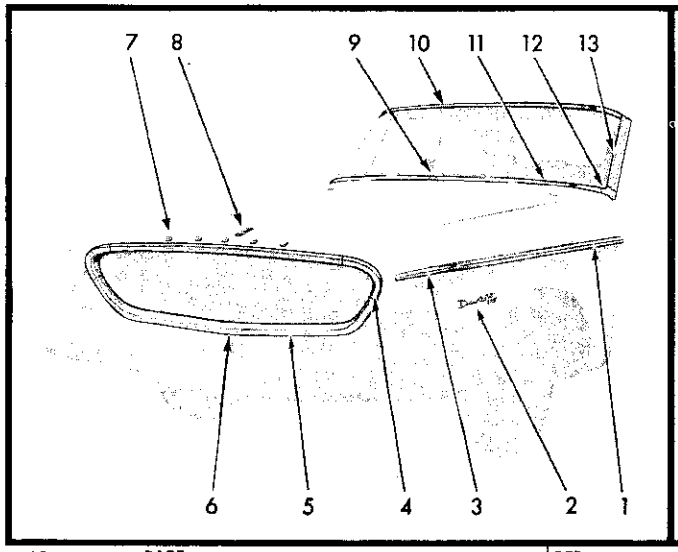

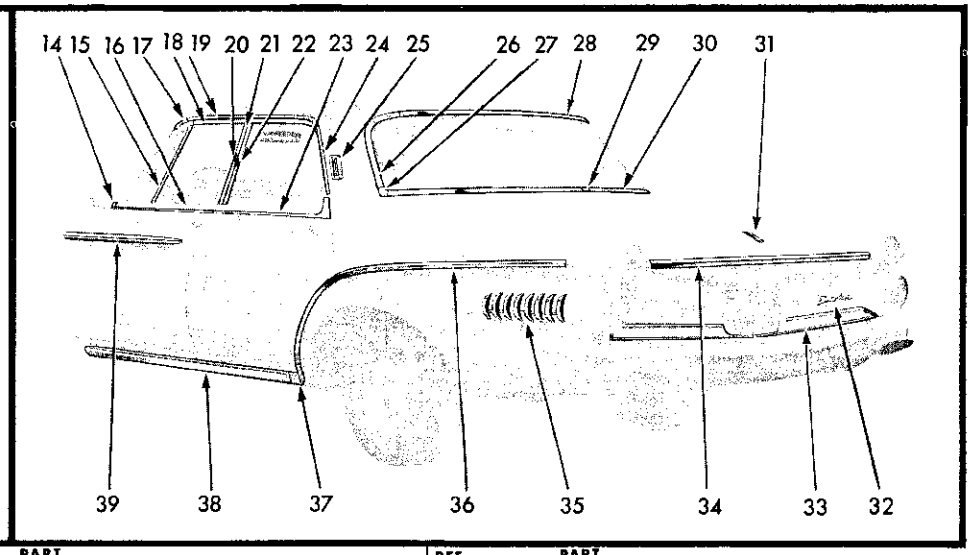

REF. NO.	QTY	PART NUMBER	DESCRIPTION
1	1	2298 678-9	MOULDING PACKAGE, Fender Side Rear (12-15-2)
	2	6001 236	Clip
	2	6000 993	Clip
	8	6001 051	Retainer
	8	6006 438	Nut
2	2	2099 966	NAME PLATE, Fender Side (12-15-21)
	6	6000 616	Nut
3	1	2298 676-7	MOULDING PACKAGE, Fender Side Front (12-15-2)
	2	6001 236	Clip
	4	6001 235	Clip
4	1	2298 683-4	MOULDING PACKAGE, Fender Front Upper (12-15-2)
	2	6000 963	Clip
	2	6001 225	Clip
	2	6001 227	Clip
5	1	2298 681-2	MOULDING PACKAGE, Radiator Grille Panel (7-16-36)
	8	6001 227	Clip
6	1	2298 680	COVER PACKAGE, Radiator Grille Panel Moulding Joint (7-16-44)
	1	---- ---	Nut
7	2	2099 517	LETTER, Hood Front "D" (15-06-16)
	1	2099 518	"O" (15-06-16)
	1	2099 519	"G" (15-06-16)
	1	2099 520	"E" (15-06-16)
	10	6000 616	Nut
8	1	2099 522	MEDALLION, Hood (15-06-6)
	2	6000 955	Nut
9	1	2254 524	COVER, Windshield Outside Finish Lower Moulding Joint (23-23-66)
10	1	2298 552	MOULDING PACKAGE, Windshield Outside Finish Upper (23-23-65)
	8	6000 966	Retainer

All Packages Include Attaching Parts

REF. NO.	QTY	PART NUMBER	DESCRIPTION
11	1	2298 571-2	MOULDING PACKAGE, Windshield Outside Finish Lower (23-23-65)
	10	6000 966	Retainer
12	1	2166 970-1	MOULDING, Windshield Outside Finish Lower End (23-23-65)
13	1	2166 966-7	MOULDING, Windshield Outside Finish Side (23-23-65)
14	1	2298 713-4	MOULDING PACKAGE, Front Door Belt Front (23-23-32)
	2	9416 282	Screw
15	4	2254 031	MOULDING, Front Door Vent Wing Division Channel (23-23-36)
16	1	2298 702-3	MOULDING PACKAGE, Front Door Belt Rear (23-23-32)
	12	6001 071	Clip
17	1	2254 314-5	CAP, Roof Side Drain Trough Moulding Front End (23-59-57)
18	1	2167 996-7	MOULDING, Front Door Upper (23-23-32)
19	1	2216 090-1	MOULDING, Roof Side Drain Trough (23-59-61)
20	1	2167 998-9	MOULDING, Front Door Rear (23-23-32)
21	1	2216 356-7	PANEL, Center Pillar Upper Finish (23-23-16)
22	1	2167 998-9	MOULDING, Rear Door Front (23-23-33)
23	1	2298 709-10	MOULDING PACKAGE, Rear Door Belt (23-23-33)
	10	6001 031	Clip
24	1	2216 036-7	MOULDING, Rear Door Upper (23-23-33)
25	1	2216 218-9	MEDALLION, Roof Panel Side (23-34-334)
	4	152 259	Nut Seal
26	1	2298 554-5	MOULDING PACKAGE, Rear Window Outside Finish Side (23-23-52)
	6	6000 966	Retainer
27	1	2254 066-7	COVER, Rear Window Outside Finish Side to Lower Mldg. Joint (23-23-41)
28	1	2298 556	MOULDING PACKAGE, Rear Window Outside Finish Upper (23-23-52)
	5	6000 966	Retainer

REF. NO.	QTY	PART NUMBER	DESCRIPTION
29	1	2254 524	COVER, Rear Window Outside Finish Lower Mldg. Joint (23-23-41)
30	1	2421 206	MOULDING PACKAGE, Rear Window Outside Finish Lower (23-23-52)
	10	6000 966	Retainer
31	1	2167 974	MEDALLION, Deck Lid (23-19-114)
	2	6000 960	Clip
32	1	2254 773	NAME PLATE, Deck Opening Lower Panel (23-34-184)
	3	152 259	Nut & Washer
33	1	2254 370-1	PANEL, Deck Lower Panel Finish (23-23-28)
	7	9414 080	Screw
	8	---- ---	Nut
34	1	2275 919	MOULDING PACKAGE, Deck Lid (23-23-30)
	6	6000 996	Retainer
	6	441 256	Nut
35	1	2167 970-1	ORNAMENT, Quarter Panel Louver (23-34-334)
36	1	2275 947-8	MOULDING PACKAGE, Quarter Panel Rear (23-23-39)
	2	6001 007	Retainer
	8	6001 009	Retainer
	4	6001 008	Retainer
	6	---- ---	Nut
37	1	2254 122-3	MOULDING, Quarter Panel Front (23-23-39)
	2	161 895	Screw
38	1	2275 945-6	MOULDING PACKAGE, Body Side Sill (23-23-2)
	10	6000 995	Retainer
	2	6023 331	Screw
39	1	2275 943-4	MOULDING PACKAGE, Front Door Lower (23-23-32)
	6	6000 993	Clip
	4	6000 951	Clip
	4	151 497	Nut

Part Type Code is Indicated in Parentheses **19x9268B**

MOULDINGS - DART 440 SD1-2(H) 4 DOOR SEDAN

MyMopar.com

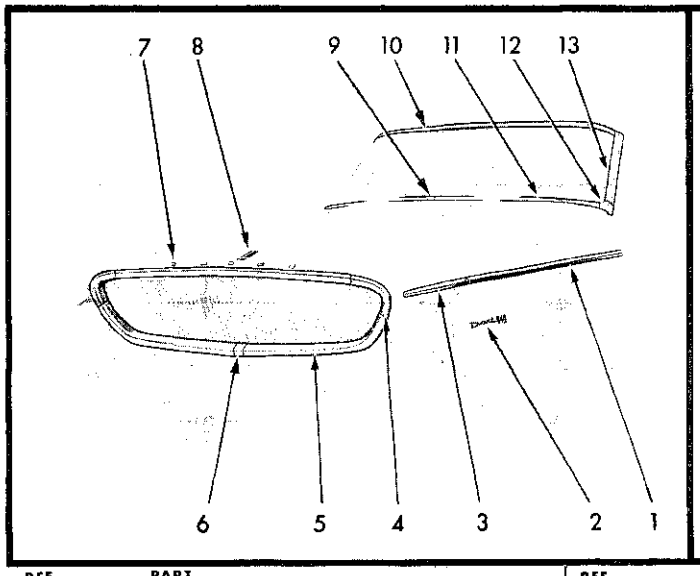

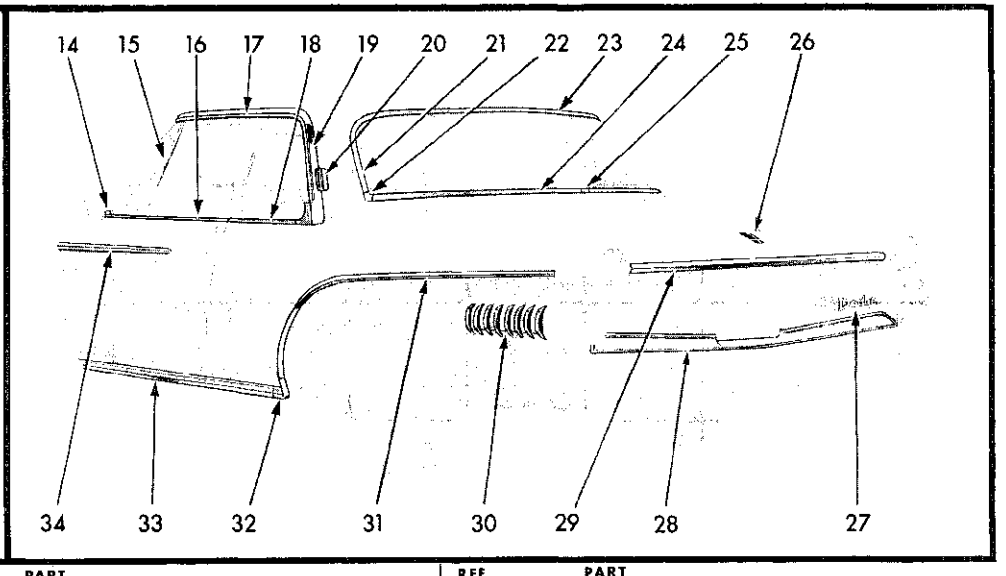

REF. NO.	QTY	PART NUMBER	DESCRIPTION
1	1	2298 678-9	MOULDING PACKAGE, Fender Side Rear (12-15-2)
	2	6001 236	Clip 8 6001 051 Retainer
	2	6000 993	Clip 8 6006 438 Nut
2	2	2099 966	NAME PLATE, Fender Side (12-15-21)
	6	6000 616	Nut
3	1	2298 676-7	MOULDING PACKAGE, Fender Side Front (12-15-2)
	2	6001 236	Clip
	4	6001 235	Clip
4	1	2298 683-4	MOULDING PACKAGE, Fender Front Upper (12-15-2)
	2	6000 963	Clip
	2	6001 225	Clip
	2	6001 227	Clip
5	1	2298 681-2	MOULDING PACKAGE, Radiator Grille Panel (7-16-36)
	8	6001 227	Clip
6	1	2298 680	COVER PACKAGE, Radiator Grille Panel Moulding Joint (7-16-44)
	1	---- ---	Nut
7	2	2099 517	LETTER, Hood Front "D" (15-06-16)
	1	2099 518	"O" (15-06-16)
	1	2099 519	"G" (15-06-16)
	1	2099 520	"E" (15-06-16)
	10	6000 616	Nut
8	1	2099 522	MEDALLION, Hood (15-06-6)
	2	6000 955	Nut
9	1	2254 524	COVER, Windshield Outside Finish Lower Moulding Joint (23-23-66)
10	1	2298 552	MOULDING PACKAGE, Windshield Outside Finish Upper (23-23-65)
	8	6000 966	Retainer

All Packages Include Attaching Parts

REF. NO.	QTY	PART NUMBER	DESCRIPTION
11	1	2298 571-2	MOULDING PACKAGE, Windshield Outside Finish Lower (23-23-65)
	10	6000 966	Retainer
12	1	2166 970-1	MOULDING, Windshield Outside Finish Lower End (23-23-65)
13	1	2166 966-7	MOULDING, Windshield Outside Finish Side (23-23-65)
14	1	2298 713-4	MOULDING PACKAGE, Door Belt Front (23-23-32)
	2	9416 282	Screw
15	4	2254 031	MOULDING, Front Door Vent Wing Division Channel (23-23-36)
16	1	2298 704-5	MOULDING PACKAGE, Door Belt Rear (23-23-32)
	14	---- ---	Clip
17	1	2216 042-3	MOULDING, Roof Panel Outside Finish Front (23-23-42)
18	1	2298 721-2	MOULDING PACKAGE, Quarter Panel Belt (23-23-39)
	8	6001 019	Clip
	2	9417 316	Screw
	2	---- ---	Nut
19	1	2167 978-9	MOULDING, Roof Panel Outside Finish Side Rear (23-23-42)
20	1	2216 218-9	MEDALLION, Roof Panel Side (23-34-334)
	4	152 259	Nut Seal
21	1	2298 554-5	MOULDING PACKAGE, Rear Window Outside Finish Side (23-23-52)
	6	6000 966	Retainer
22	1	2254 066-7	COVER, Rear Window Outside Finish Side to Lower Moulding Joint (23-23-41)
23	1	2298 556	MOULDING PACKAGE, Rear Window Outside Finish Upper (23-23-52)
	5	6000 966	Retainer

REF. NO.	QTY	PART NUMBER	DESCRIPTION
24	1	2421 206	MOULDING PACKAGE, Rear Window Outside Finish Lower (23-23-41)
	10	6000 966	Retainer
25	1	2254 524	COVER, Rear Window Outside Finish Lower Moulding Joint (23-23-41)
26	1	2167 974	MEDALLION, Deck Lid (23-19-114)
	2	6000 960	Clip
27	1	2254 773	NAME PLATE, Deck Opening Lower Panel (23-34-184)
	3	152 259	Nut & Washer
28	1	2254 370-1	PANEL, Deck Lower Panel Finish (23-23-28)
	7	9414 080	Screw
	8	---- ---	Nut
29	1	2275 919	MOULDING PACKAGE, Deck Lid (23-23-30)
	6	6000 996	Retainer
	6	441 256	Nut
30	1	2167 970-1	ORNAMENT, Quarter Panel Louver (23-34-334)
	4	6022 997	Washer 6 ---- --- Nut
	4	2254 396	Spacer
31	1	2275 947-8	MOULDING PACKAGE, Quarter Panel Rear (23-23-39)
	2	6001 007	Retainer 4 6001 008 Retainer
	8	6001 009	Retainer 6 ---- --- Nut
32	1	2254 122-3	MOULDING, Quarter Panel Front (23-23-39)
	2	161 895	Screw
33	1	2275 945-6	MOULDING PACKAGE, Body Side Sill (23-23-2)
	10	6000 995	Retainer
	2	6023 331	Screw
34	1	2275 943-4	MOULDING PACKAGE, Door Lower (23-23-32)
	6	6000 993	Clip 4 151 497 Nut
	4	6000 951	Clip

Part Type Code is Indicated in Parentheses **19x9271B**

MOULDINGS - DART 440 SD1-2(H) SPECIAL CLUB COUPE

MyMopar.com

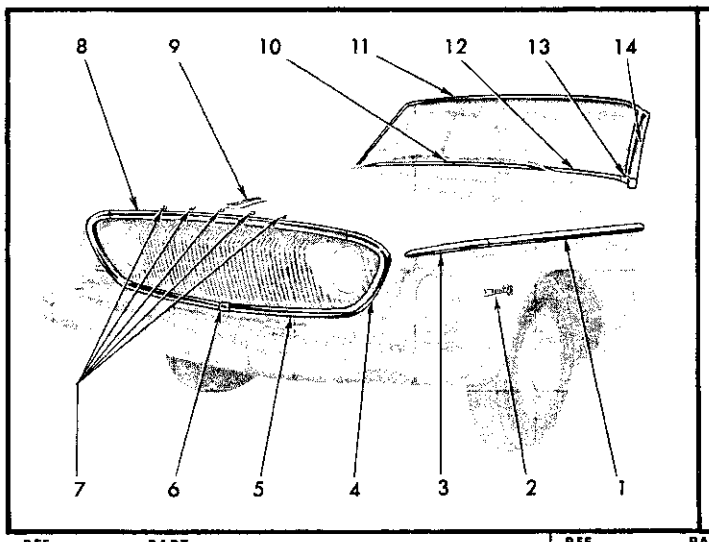

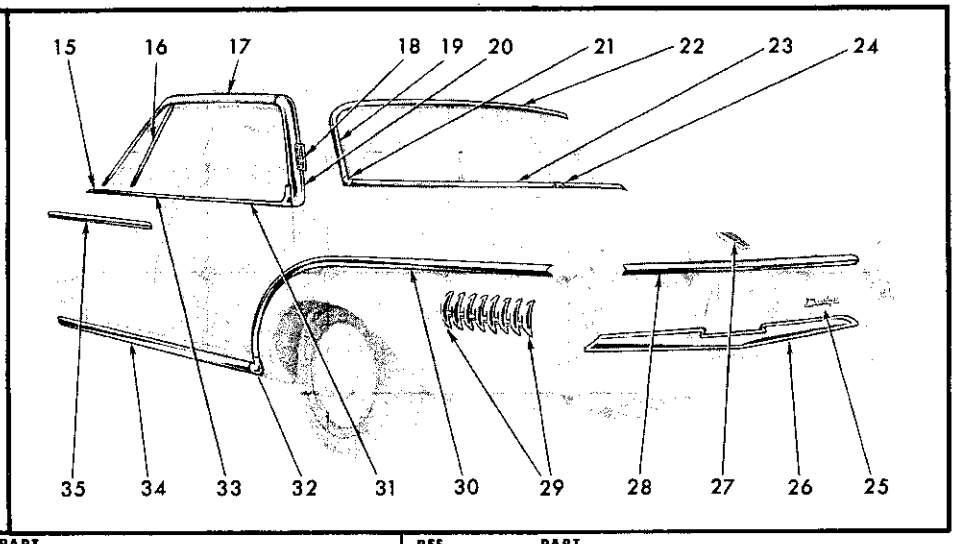

REF. NO.	QTY	PART NUMBER	DESCRIPTION
1	1	2298 678-9	MOULDING PACKAGE, Fender Side Rear (12-15-2)
	2	6001 236	Clip
	2	6000 993	Clip
	8	6001 051	Retainer
2	2	2099 966	NAME PLATE, Fender Side (12-15-21)
	6	6000 616	Nut
3	1	2298 676-7	MOULDING PACKAGE, Fender Side Front 12-15-2)
	2	6001 236	Clip
	4	6001 235	Clip
	6	6006 438	Nut
4	1	2298 683-4	MOULDING PACKAGE, Fender Front Upper (12-15-2)
	2	6000 963	Clip
	2	6001 225	Clip
	2	6001 227	Clip
5	1	2298 681-2	MOULDING PACKAGE, Radiator Grille Panel Lower (7-16-36)
	8	6001 227	Clip
6	1	2298 680	COVER PACKAGE, Radiator Grille Panel Moulding Joint (7-16-44)
	1	---- ---	Nut
7	2	2099 517	LETTER, Hood Front "D" (15-06-16)
	1	2099 518	LETTER, Hood Front "O"
	1	2099 519	LETTER, Hood Front "G"
	1	2099 520	LETTER, Hood Front "E"
8	1	2298 675	MOULDING PACKAGE, Hood Front (15-25-2)
	4	6001 217	Clip
	4	---- ---	Nut
9	1	2099 522	MEDALLION, Hood Top (15-06-6)
	2	6000 955	Nut
10	1	2254 524	COVER, Windshield Outside Finish Lower Moulding Joint (23-23-66)
	8	6006 438	Nut

All Packages Include Attaching Parts

REF. NO.	QTY	PART NUMBER	DESCRIPTION
11	1	2298 552	MOULDING PACKAGE, Windshield Outside Finish Upper (23-23-65)
	8	6000 966	Retainer
12	1	2298 571-2	MOULDING PACKAGE, Windshield Outside Finish Lower (23-23-65)
	10	6000 966	Retainer
13	1	2166 970-1	MOULDING, Windshield Outside Finish Lower End (23-23-65)
14	1	2166 966-7	MOULDING, Windshield Outside Finish Side (23-23-65)
15	1	2298 713-4	MOULDING PACKAGE, Front Door Belt Front (23-23-32)
	2	9416 282	Screw
16	4	2254 031	MOULDING, Front Door Vent Wing Division Channel (23-23-36)
17	1	2216 042-3	MOULDING, Roof Panel Outside Finish Front (23-23-42)
18	1	2216 218-9	MEDALLION, Roof Panel Side (23-34-334)
	4	152 259	Nut
19	1	2298 554-5	MOULDING PACKAGE, Rear Window Outside Finish Side (23-23-52)
	6	6000 966	Retainer
20	1	2252 270-1	MOULDING, Roof Panel Outside Finish Side Rear (23-23-42)
21	1	2254 066-7	COVER, Rear Window Outside Finish Side to Lower Moulding Joint (23-23-41)
22	1	2298 556	MOULDING PACKAGE, Rear Window Outside Finish Upper (23-23-52)
	5	6000 966	Retainer
23	1	2421-206	MOULDING PACKAGE, Rear Window Outside Finish Lower (23-23-52)
	10	6000 966	Retainer
24	1	2254 524	COVER, Rear Window Outside Finish Lower Moulding Joint (23-23-41)
25	1	2254 773	NAME PLATE, Deck Opening Lower Panel (23-34-184)
	3	152 259	Nut and Washer

REF. NO.	QTY	PART NUMBER	DESCRIPTION
26	1	2254 370-1	PANEL, Deck Opening Lower Panel Finish (23-23-28)
	8	---- ---	Nut
	7	9414 080	Screw
27	1	2167 974	MEDALLION, Deck Lid (23-19-114)
	2	6000 960	Clip
28	1	2275 919	MOULDING PACKAGE, Deck Lid (23-23-30)
	6	6000 996	Retainer
	6	441 256	Nut
29	1	2167 970-1	ORNAMENT, Quarter Panel Lower (23-34-334)
	4	6022 997	Washer
	4	2254 396	Spacer
30	1	2275 947-8	MOULDING PACKAGE, Quarter Panel Lower Rear (23-23-39)
	2	6001 007	Retainer
	4	6001 008	Retainer
31	1	2298 719-20	MOULDING PACKAGE, Rear Door Belt (23-23-33)
	10	6001 031	Clip
32	1	2254 122-3	MOULDING, Quarter Panel Lower Front, w/Retainer (23-23-39)
	2	161 895	Screw
33	1	2298 702-3	MOULDING PACKAGE, Front Door Belt Rear (23-23-32)
	12	6001 071	Clip
34	1	2275 945-6	MOULDING PACKAGE, Body Side Sill (23-23-2)
	10	6000 995	Retainer
	2	6023 331	Screw
35	1	2275 943-4	MOULDING PACKAGE, Front Door Lower (23-23-32)
	6	6000 993	Clip
	4	6000 951	Clip
	4	151 497	Nut
	6	---- ---	Nut
	8	6001 009	Retainer

Part Type Code is Indicated in Parentheses **19x9206C**

MOULDINGS - DART 440 SD2(H) SPECIAL 4 DOOR SEDAN

MyMopar.com

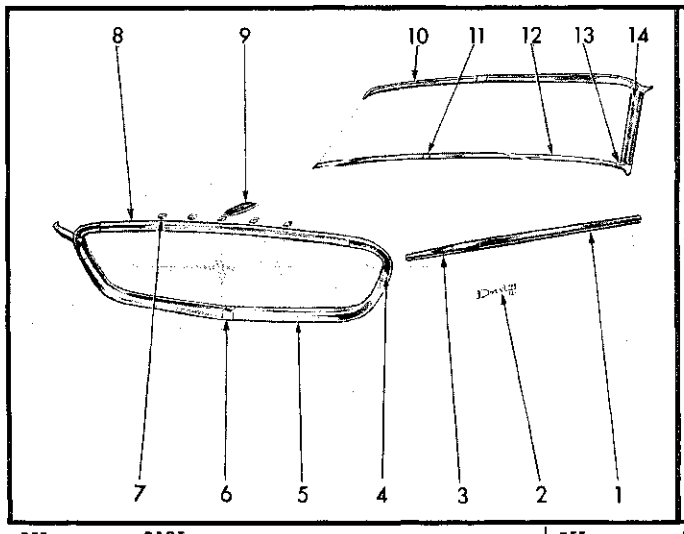

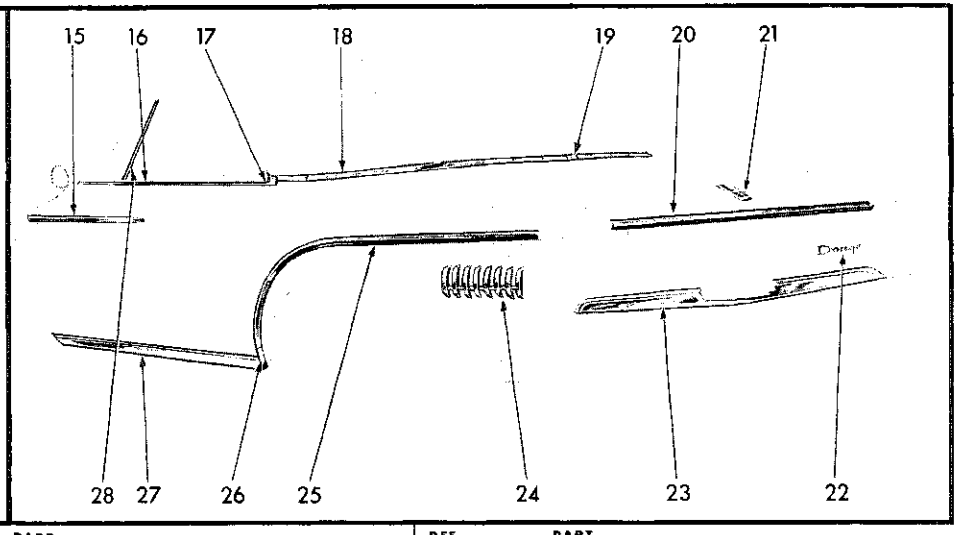

REF. NO.	QTY	PART NUMBER	DESCRIPTION
1	1	2298 678-9	MOULDING PACKAGE, Fender Side Rear (12-15-2)
	2	6001 236	Clip
	2	6000 993	Clip
	8	6001 051	Retainer
	8	6006 438	Nut
2	2	2099 966	NAME PLATE, Fender Side (12-15-21)
	6	6000 616	Nut
3	1	2298 676-7	MOULDING PACKAGE, Fender Side Front (12-15-2)
	6	6001 236	Clip
4	1	2298 683-4	MOULDING PACKAGE, Fender Front Upper (12-15-2)
	2	6000 963	Clip
	2	6001 225	Clip
	2	6001 227	Clip
5	1	2298 681-2	MOULDING PACKAGE, Grille Lower Panel (7-16-36)
	8	6001 227	Clip
6	1	2298 680	COVER, Grille Lower Panel Moulding Joint (7-16-44)
	1	---- ---	Nut
7	2	2099 517	LETTER, Hood Front "D" (15-06-16)
	1	2099 518	"O" (15-06-16)
	1	2099 519	"G" (15-06-16)
	1	2099 520	"E" (15-06-16)
	8	6000 616	Nut
8	1	2298 675	MOULDING PACKAGE, Hood Front (15-25-2)
	4	6001 217	Clip
	4	271 472	Nut
9	1	2099 522	MEDALLION, Hood Top (15-06-6)
	2	6000 955	Nut
10	1	2252 056-7	MOULDING and EXTENSION, Windshield Header Outside Finish (23-23-65)
	7	274 109	Screw
	2	9413 197	Screw

All Packages Include Attaching Parts

REF. NO.	QTY	PART NUMBER	DESCRIPTION
11	1	2254 524	COVER, Windshield Outside Finish Lower Mldg. Joint (23-23-66)
12	1	2298 571-2	MOULDING PACKAGE, Windshield Outside Finish Lower (23-23-65)
	10	6000 966	Retainer
13	1	2166 970-1	MOULDING, Windshield Outside Finish Lower End (23-23-65)
14	1	2166 966-7	MOULDING, Windshield Outside Finish Side (23-23-65)
15	1	2275 943-4	MOULDING PACKAGE, Door Lower (23-23-32)
	6	6000 993	Clip
	4	151 497	Nut
	4	6000 951	Clip
16	1	2299 406-7	MOULDING PACKAGE, Door Belt (23-23-32)
	6	6023 574	Screw
17	1	2299 408-9	MOULDING PACKAGE, Quarter Panel Belt Front (23-23-39)
	6	188 973	Screw
18	1	2251 638-9	MOULDING, Quarter Panel Belt Rear (23-23-39)
	2	2254 452	Retainer
	2	2254 794	Retainer
	4	6001 004	Nut
	1	2189 852-3	Retainer
	16	---- ---	Fastener
19	1	2251 635	CAP, Quarter Panel Belt Moulding Rear Center (23-23-41)
20	1	2275 919	MOULDING PACKAGE, Deck Lid (23-23-30)
	6	6000 996	Retainer
	6	441 256	Nut
21	1	2167 974	MEDALLION, Deck Lid (23-19-114)
	2	6000 960	Clip
22	1	2254 773	NAME PLATE, Deck Opening Lower Panel (23-34-184)
	3	152 259	Nut & Washer

REF. NO.	QTY	PART NUMBER	DESCRIPTION
23	1	2254 370-1	PANEL, Deck Lower Panel Finish (23-23-28)
	7	9414 080	Screw
	8	---- ---	Nut
24	1	2167 970-1	ORNAMENT, Quarter Panel Louver (23-23-334)
	4	6022 997	Washer
	4	2254 396	Spacer
	6	---- ---	Nut
25	1	2275 947-8	MOULDING PACKAGE, Quarter Panel Lower Rear (23-23-39)
	8	6001 009	Retainer
	4	6001 008	Retainer
	2	6001 007	Retainer
	6	---- ---	Nut
26	1	2254 122-3	MOULDING, Quarter Panel Lower Front (23-23-39)
	2	161 895	Screw
27	1	2275 945-6	MOULDING PACKAGE, Side Sill (23-23-2)
	10	6000 995	Retainer
	2	6023 331	Screw
28	4	2254 031	MOULDING, Door Vent Wing Division Channel (23-23-36)

Part Type Code is Indicated in Parentheses **19x9286C**

MOULDINGS - DART 440 SD2(H) CONVERTIBLE COUPE

MyMopar.com

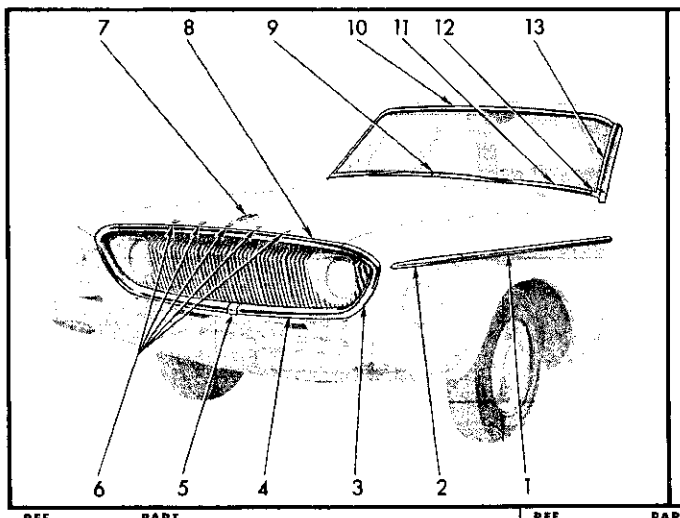

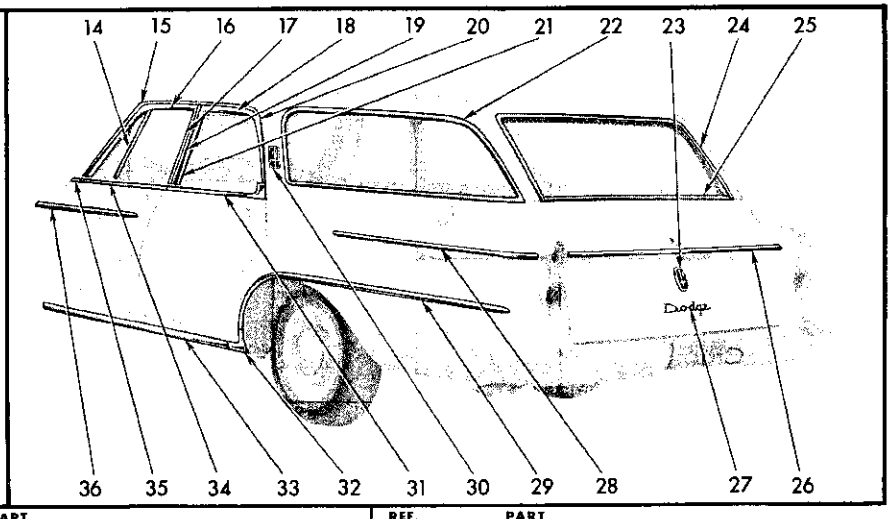

REF. NO.	QTY	PART NUMBER	DESCRIPTION
1	1	2298 678-9	MOULDING PACKAGE, Fender Side Rear (12-15-2)
	2	6001 236	Clip 8 6001 051 Retainer
	2	6000 993	Clip 8 6006 438 Nut
2	1	2298 676-7	MOULDING PACKAGE, Fender Side Front (12-15-2)
	2	6001 236	Clip
	4	6001 235	Clip
3	1	2298 683-4	MOULDING PACKAGE, Fender Front Upper (12-15-2)
	2	6000 963	Clip
	2	6001 225	Clip
	2	6001 227	Clip
4	1	2298 681-2	MOULDING PACKAGE, Radiator Grille Panel (7-16-36)
	8	6001 227	Clip
5	1	2298 680	COVER PACKAGE, Radiator Grille Panel Moulding Joint (7-16-44)
	1	---- ---	Nut
6	1	2099 517	LETTER, Hood Front "D" (15-06-16)
	1	2099 518	"O"
	1	2099 519	"G"
	1	2099 520	"E"
	8	6000 616	Nut
7	1	2099 522	MEDALLION, Hood Top (15-06-6)
	2	6000 955	Nut
8	1	2298 675	MOULDING PACKAGE, Hood Front (15-25-2)
	4	6001 217	Clip
	4	271 472	Nut
9	1	2254 524	COVER, Windshield Outside Finish Lower Moulding Joint (23-23-66)
10	1	2298 552	MOULDING PACKAGE, Windshield Outside Finish Upper (23-23-65)
	8	6000 966	Retainer

All Packages Include Attaching Parts

REF. NO.	QTY	PART NUMBER	DESCRIPTION
11	1	2298 571-2	MOULDING PACKAGE, Windshield Outside Finish Lower (23-23-65)
	10	6000 966	Retainer
12	1	2166 970-1	MOULDING, Windshield Outside Finish Lower End (23-23-66)
13	1	2166 966-7	MOULDING, Windshield Outside Finish Side (23-23-65)
14	4	2254 031	MOULDING, Front Door Vent Wing Division Channel (23-23-36)
15	1	2254 314-5	CAP, Roof Side Drain Trough Moulding Front End (23-59-57)
16	1	2167 996-7	MOULDING, Front Door Window Frame Upper (23-23-32)
17	1	2167 998-9	MOULDING, Front Door Window Frame Rear (23-23-32)
18	1	2216 036-7	MOULDING, Rear Door Window Frame Upper (23-23-33)
19	1	2216 356-7	PANEL, Center Pillar Upper Finish (23-23-16)
	8	125 978	Screw
20	1	2216 090-1	MOULDING, Roof Side Drain Trough (23-59-61)
21	1	2167 998-9	MOULDING, Rear Door Window Frame Front (23-23-33)
22	2	2255 027	LOCKINGSTRIP, Quarter Window Glass Weatherstrip Rubber (23-63-110)
	1	2254 918-9	LOCKINGSTRIP, Quarter Window Glass Weatherstrip Mylar (23-63-110)
23	1	2251 810	MEDALLION, Tailgate Outside Panel (23-54-11)
	2	1839 995	Nut
24	1	2251 802-3	MOULDING, Tailgate Opening Outside Finish Rear Upper Pillar (23-23-60)
25	1	2275 995	MOULDING PACKAGE, Tailgate Outside Finish Belt (23-23-61)
	2	125 978	Screw 7 6001 232 Clip
26	1	2275 949	MOULDING PACKAGE, Tailgate Outside Finish Outside Panel (23-23-61)
	5	6001 033	Clip 2 151 497 Nut
	2	6001 020	Clip

REF. NO.	QTY	PART NUMBER	DESCRIPTION
27	1	2254 773	NAMEPLATE, Tailgate Outside Panel Dodge Script (23-54-11)
	3	1839 995	Nut
28	1	2275 304-5	MOULDING PACKAGE, Quarter Panel Upper (23-23-39)
	12	6000 137	Clip
	2	6010 093	Clip
	2	151 497	Nut
29	1	2298 569-70	MOULDING PACKAGE, Quarter Panel Lower Rear (23-23-39)
	18	6000 486	Clip
30	1	2254 720-1	MEDALLION, Roof Panel Side (23-34-334)
	4	6000 808	Clip 4 6022 787 Washer
31	1	2298 709-10	MOULDING PACKAGE, Rear Door Belt (23-23-33)
	10	---- ---	Clip
32	1	2275 900-1	MOULDING PACKAGE, Quarter Panel Lower Front (23-23-39)
	2	---- ---	Screw 2 ---- --- Nut
33	1	2275 945-6	MOULDING PACKAGE, Side Sill (23-23-2)
	10	6000 995	Retainer
	2	6023 331	Screw
34	1	2298 702-3	MOULDING PACKAGE, Front Door Belt Rear (23-23-32)
	12	6001 071	Clip
35	1	2298 713-4	MOULDING PACKAGE, Front Door Belt Front (23-23-32)
	2	9416 282	Screw
36	1	2275 943-4	MOULDING PACKAGE, Front Door Lower (23-23-32)
	6	6000 993	Clip
	4	6000 951	Clip
	4	151 497	Nut

Part Type Code is Indicated in Parentheses **19x9198C**

MOULDINGS - DART 440 SD2(H) SUBURBAN

MyMopar.com

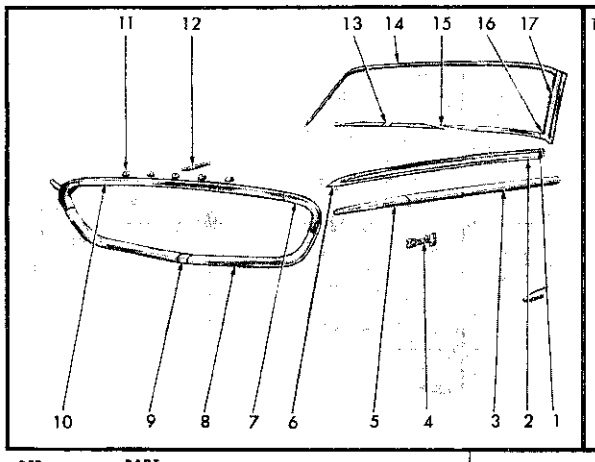

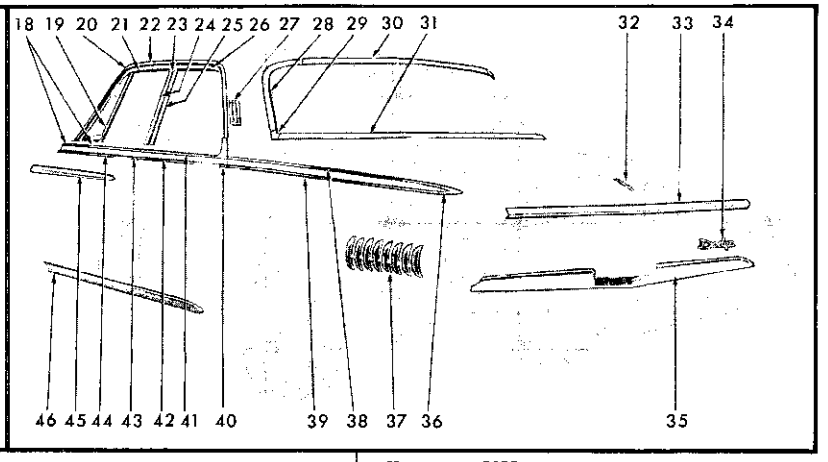

REF. NO.	QTY	PART NUMBER	DESCRIPTION
1	1	2299 354-5	MOULDING PACKAGE, Fender Side Upper (12-15-2)
	18	6001 031	Clip
	4	6006 520	Retainer
	4	6000 637	Nut
2	1	2299 356-7	MOULDING PACKAGE, Fender Side Lower (12-15-2)
	18	6001 031	Clip
	4	6006 520	Retainer
	4	6000 637	Nut
3	1	2298 678-9	MOULDING PACKAGE, Fender Side Rear (12-15-2)
	2	6000 993	Clip
	2	6001 236	Clip
	8	6001 051	Retainer
	8	6006 438	Nut
4	2	2099 966	NAME PLATE, Fender Side (Dart 440)(12-15-21)
	6	6000 616	Nut
5	1	2298 676-7	MOULDING PACKAGE, Fender Side Front (12-15-2)
	6	6001 236	Clip
6	1	2299 358-9	MOULDING PACKAGE, Fender Side Upper to Lower (12-15-2)
	2	---- ---	Seal
	2	9415 250	Nut
7	1	2298 683-4	MOULDING PACKAGE, Fender Front Upper (12-15-2)
	2	6000 963	Clip
	2	6001 225	Clip
	2	6001 227	Clip
8	1	2298 681-2	MOULDING PACKAGE, Radiator Grille Lower Panel (7-16-36)
	8	6001 227	Clip
9	1	2298 680	COVER, Radiator Grille Lower Panel Moulding Joint (7-16-44)
	1	---- ---	Nut
10	1	2298 675	MOULDING PACKAGE, Hood Front (15-25-2)
	4	6001 217	Clip
	4	271 472	Nut
11	2	2099 517	LETTER, Hood Front "D" (15-06-16)
	1	2099 518	"O"
	1	2099 519	"G"
	1	2099 520	"E"
12	1	2099 522	MEDALLION, Hood Top (15-06-6)
	2	6000 616	Nut
13	1	2254 524	COVER, Windshield Outside Finish Lower Moulding Joint (23-23-66)

All Packages Include Attaching Parts

REF. NO.	QTY	PART NUMBER	DESCRIPTION
14	1	2298 552	MOULDING PACKAGE, Windshield Outside Finish Upper (23-23-65)
	8	6000 966	Retainer
15	1	2298 571-2	MOULDING PACKAGE, Windshield Outside Finish Lower (23-23-65)
	10	6000 966	Retainer
16	1	2166 970-1	MOULDING, Windshield Outside Finish Lower End (23-23-65)
17	1	2166 966-7	MOULDING, Windshield Outside Finish Side (23-23-65)
18	1	2421 432	MOULDING PACKAGE, Front Door Upper Right (23-23-32)
	1	6001 030	Retainer
	1	152 259	Nut
	6	6001 031	Clip
	1	2252 199	MOULDING, Front Door Upper Front Left (23-23-32)
	1	2421 433	MOULDING PACKAGE, Front Door Upper Rear (23-23-32)
	1	6001 030	Retainer
	1	152 259	Nut
	6	6001 031	Clip
19	4	2254 031	MOULDING, Front Door Vent Wing Division Channel (23-23-36)
20	1	2254 314-5	CAP, Roof Side Drain Trough Moulding Front End (23-59-57)
21	1	2167 996-7	MOULDING, Front Door Upper (23-23-32)
22	1	2255 998-9	MOULDING, Roof Side Drain Trough (23-59-61)
23	1	2216 356-7	PANEL, Center Pillar Upper Finish (23-23-16)
24	1	2167 998-9	MOULDING, Front Door Rear (23-23-32)
25	1	2167 998-9	MOULDING, Rear Door Front (23-23-33)
26	1	2216 036-7	MOULDING, Rear Door Upper (23-23-33)
27	1	2216 218-9	MEDALLION, Roof Panel Side (23-34-334)
	4	152 259	Nut and Seal
28	1	2298 554-5	MOULDING PACKAGE, Rear Window Outside Finish Side (23-23-52)
	6	6000 966	Retainer
29	1	2254 066-7	COVER, Rear Window Outside Finish Side to Lower Moulding Joint (23-23-41)
30	1	2298 556	MOULDING PACKAGE, Rear Window Outside Finish Upper (23-23-52)
	5	6000 966	Retainer
31	1	2421 206	MOULDING PACKAGE, Rear Window Outside Finish Lower (23-23-52)
	10	6000 966	Retainer
32	1	2167 974	MEDALLION, Deck Lid (23-19-114)
	2	6000 960	Clip

REF. NO.	QTY	PART NUMBER	DESCRIPTION
33	1	2275 919	MOULDING PACKAGE, Deck Lid (23-23-30)
	6	6000 996	Retainer
	6	441 256	Nut
34	1	2254 773	NAME PLATE, Deck Opening Lower Panel (23-34-184)
	3	152 259	Nut and Washer
35	1	2254 370-1	PANEL, Deck Lower Panel Finish (23-23-28)
	7	9414 080	Screw
	8	---- ---	Nut
36	2	2298 732	CAP PACKAGE, Quarter Panel Outside Upper and Lower Moulding Rear End (23-23-41)
	1	---- ---	Washer
	1	274 752	Nut
37	1	2167 970-1	ORNAMENT, Quarter Panel Louver (23-34-334)
	4	6022 997	Washer
	4	2254 396	Spacer
	6	---- ---	Nut
38	1	2421 436-7	MOULDING PACKAGE, Quarter Panel Upper (23-23-39)
	2	6001 030	Retainer
	2	152 259	Nut
	14	6001 031	Clip
39	1	2421 438-9	MOULDING PACKAGE, Quarter Panel Lower (23-23-39)
	2	6001 030	Retainer
	2	152 259	Nut
	14	6001 031	Clip
40	1	2255 928-9	MOULDING, Rear Door Lower Rear (23-23-33)
41	1	2421 444-5	MOULDING PACKAGE, Rear Door Upper (23-23-33)
	10	6001 031	Clip
42	1	2421 434-5	MOULDING PACKAGE, Rear Door Lower Front (23-23-39)
	8	6001 031	Clip
43	1	2255 926-7	MOULDING, Front Door Lower Rear (23-23-32)
44	1	2421 430-1	MOULDING PACKAGE, Front Door Lower Front (23-23-32)
	2	6001 030	Retainer
	2	152 259	Nut
	8	6001 031	Clip
45	1	2275 943-4	MOULDING PACKAGE, Front Door Lower (23-23-32)
	6	6000 993	Clip
	4	6000 951	Clip
	4	151 497	Nut
46	2	2421 692	MOULDING PACKAGE, Body Side Sill (23-23-2)
	2	6023 331	Screw
	10	6000 995	Retainer

Part Type Code is Indicated in Parentheses **19x9429A**

MOULDINGS - DART 440 SPORT SWEEP (SD-H) 4 DOOR SEDAN

MyMopar.com

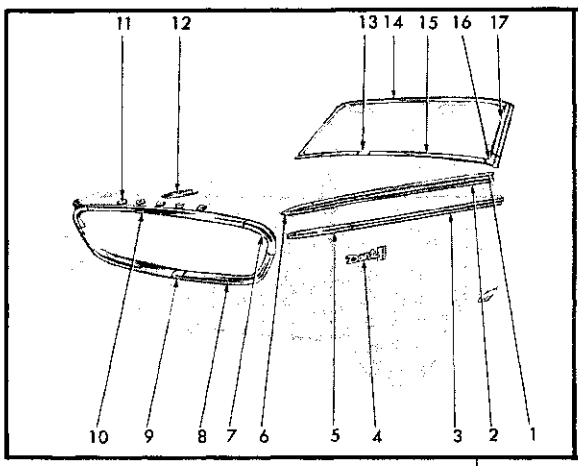

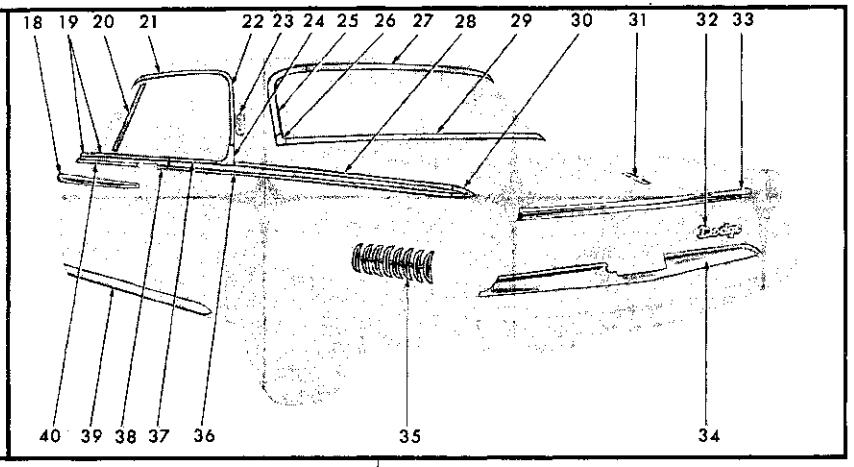

REF. NO.	QTY	PART NUMBER	DESCRIPTION
1	1	2299 354-5	MOULDING PACKAGE, Fender Side Upper (12-15-2)
	18	6001 031	Clip
	4	6006 520	Retainer
	4	6000 637	Nut
2	1	2299 356-7	MOULDING PACKAGE, Fender Side Lower (12-15-2)
	18	6001 031	Clip
	4	6006 520	Retainer
	4	6000 637	Nut
3	1	2298 678-9	MOULDING PACKAGE, Fender Side Rear (12-15-2)
	2	6000 993	Clip
	2	6001 236	Clip
	8	6001 051	Retainer
	8	6006 438	Nut
4	2	2099 966	NAME PLATE, Fender Side (Dart 440)(12-15-21)
	6	6000 616	Nut
5	1	2298 676-7	MOULDING PACKAGE, Fender Side Front (12-15-2)
	6	6001 236	Clip
6	1	2299 358-9	MOULDING PACKAGE, Fender Side Upper to Lower (12-15-2)
	2	---- ---	Seal
	2	9415 250	Nut
7	1	2298 683-4	MOULDING PACKAGE, Fender Front Upper (12-15-2)
	2	6000 963	Clip
	2	6001 225	Clip
	2	6001 227	Clip
8	1	2298 681-2	MOULDING PACKAGE, Radiator Grille Lower Panel (7-16-36)
	8	6001 227	Clip
9	1	2298 680	COVER, Radiator Grille Lower Panel Moulding Joint (7-16-44)
	1	---- ---	Nut
10	1	2298 675	MOULDING PACKAGE, Hood Front (15-25-2)
	4	6001 217	Clip
	4	271 472	Nut
11	2	2099 517	LETTER, Hood Front, "D" (15-06-16)
	1	2099 518	"O"
	1	2099 519	"G"
	1	2099 520	"E"
	8	6000 616	Nut
12	1	2099 522	MEDALLION, Hood Top (15-06-6)
	2	6000 616	Nut

All Packages Include Attaching Parts

REF. NO.	QTY	PART NUMBER	DESCRIPTION
13	1	2254 524	COVER, Windshield Outside Finish Lower Moulding Joint (23-23-66)
14	1	2298 552	MOULDING PACKAGE, Windshield Outside Finish Upper (23-23-65)
	8	6000 966	Retainer
15	1	2298 571-2	MOULDING PACKAGE, Windshield Outside Finish Lower (23-23-65)
	10	6000 966	Retainer
16	1	2166 970-1	MOULDING, Windshield Outside Finish Lower End (23-23-65)
17	1	2166 966-7	MOULDING, Windshield Outside Finish Side (23-23-65)
18	1	2275 943-4	MOULDING PACKAGE, Door Lower (23-23-32)
	6	6000 993	Clip
	4	6000 951	Clip
	4	151 497	Nut
19	1	2299 380	MOULDING PACKAGE, Door Upper Right (23-23-32)
	7	6000 903	Clip
	1	6006 520	Retainer
	1	271 472	Nut
	1	2252 199	MOULDING, Door Upper Front Left (23-23-32)
	1	2299 379	MOULDING PACKAGE, Door Upper Rear Left (23-23-32)
	7	6000 903	Clip
	1	6006 520	Retainer
	1	271 472	Nut
20	4	2254 031	MOULDING, Front Door Vent Division Channel (23-23-36)
21	1	2216 042-3	MOULDING, Roof Panel Outside Finish Front (23-23-42)
22	1	2167 978-9	MOULDING, Roof Panel Outside Finish Side Rear (23-23-42)
23	1	2216 218-9	MEDALLION, Roof Panel Side (23-34-334)
	4	152 259	Nut and Seal
24	1	2298 730-1	MOULDING PACKAGE, Quarter Panel Upper Center (23-23-39)
	4	---- ---	Seal
	4	6000 829	Clip
25	1	2298 554-5	MOULDING PACKAGE, Rear Window Outside Finish Side (23-23-52)
	6	6000 966	Retainer
26	1	2254 066-7	COVER, Rear Window Outside Finish Side to Lower Moulding Joint (23-23-41)
27	1	2298 556	MOULDING PACKAGE, Rear Window Outside Finish Upper (23-23-52)
	5	6000 966	Retainer

REF. NO.	QTY	PART NUMBER	DESCRIPTION
28	1	2299 360-1	MOULDING PACKAGE, Quarter Panel Upper Rear (23-23-39)
	12	6001 031	Clip
	4	6006 520	Retainer
	4	271 472	Nut
29	1	2421 206	MOULDING PACKAGE, Rear Window Outside Finish Lower (23-23-41)
	10	6000 966	Retainer
30	2	2298 732	CAP PACKAGE, Quarter Panel Outside Upper and Lower Moulding Rear End (23-23-41)
	1	---- ---	Washer
	1	274 752	Nut
31	1	2167 974	MEDALLION, Deck Lid (23-19-114)
	2	6000 960	Clip
32	1	2254 773	NAME PLATE, Deck Opening Lower Panel (23-34-184)
	3	152 259	Nut and Washer
33	1	2275 919	MOULDING PACKAGE, Deck Lid (23-23-30)
	6	6000 996	Retainer
	6	441 256	Nut
34	1	2254 370-1	PANEL, Deck Lid Lower Panel Finish (23-23-28)
	7	9414 080	Screw
	8	---- ---	Nut
35	1	2167 970-1	ORNAMENT, Quarter Panel Louver (23-34-334)
	4	6022 997	Washer
	4	2254 396	Spacer
	6	---- ---	Nut
36	1	2299 377-8	MOULDING PACKAGE, Quarter Panel Lower (23-23-39)
	24	6000 903	Clip
	2	6006 520	Retainer
	2	271 472	Nut
37	2	2299 382	MOULDING PACKAGE, Quarter Panel Upper Front (23-23-39)
	12	6000 903	Clip
38	1	2252 238-9	MOULDING, Door Lower Rear (23-23-32)
39	2	2421 692	MOULDING PACKAGE, Body Side Sill (23-23-2)
	4	6023 331	Screw
	10	6000 995	Retainer
40	1	2299 375-6	MOULDING PACKAGE, Door Lower Front (23-23-32)
	10	6000 903	Clip
	2	6006 520	Retainer
	2	271 472	Nut

Part Type Code is Indicated in Parentheses **19x9428**

MOULDINGS - DART 440 SPORT SWEEP (SD-H) SPECIAL CLUB COUPE

MyMopar.com

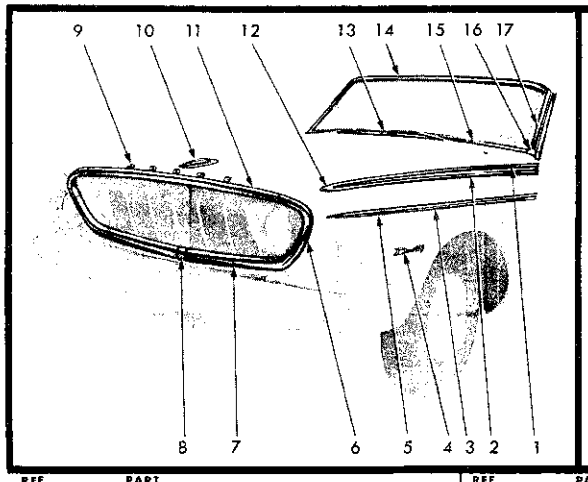

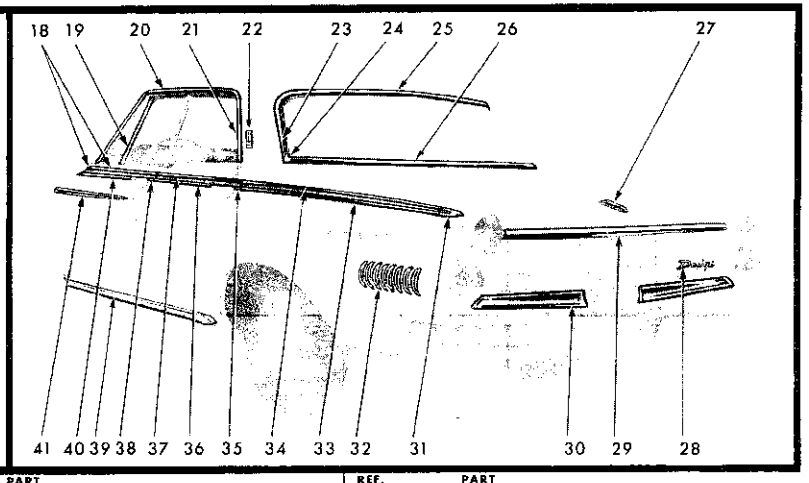

REF. NO.	QTY	PART NUMBER	DESCRIPTION
1	1	2299 354-5	MOULDING PACKAGE, Fender Side Upper (12-15-2)
	18	6001 031	Clip
	4	6006 520	Retainer
	4	6000 637	Nut
2	1	2299 356-7	MOULDING PACKAGE, Fender Side Lower (12-15-2)
	18	6001 031	Clip
	4	6006 520	Retainer
	4	6000 637	Nut
3	1	2298 678-9	MOULDING PACKAGE, Fender Side Rear (12-15-2)
	2	6000 993	Clip
	2	6001 236	Clip
	8	6001 051	Retainer
	8	6006 438	Nut
4	2	2099 966	NAME PLATE, Fender Side (Dart 440)(12-15-21)
	6	6000 616	Nut
5	1	2298 676-7	MOULDING PACKAGE, Fender Side Front (12-15-2)
	6	6001 236	Clip
6	1	2298 683-4	MOULDING PACKAGE, Fender Front Upper (12-15-2)
	2	6000 963	Clip
	2	6001 225	Clip
	2	6001 227	Clip
7	1	2298 681-2	MOULDING PACKAGE, Radiator Grille Lower Panel (7-16-36)
	8	6001 227	Clip
8	1	2298 680	COVER, Radiator Grille Lower Panel Moulding Joint (7-16-44)
	1	---- ---	Nut
9	2	2099 517	LETTER, Hood Front "D" (15-06-16)
	1	2099 518	"O"
	1	2099 519	"G"
	1	2099 520	"E"
	8	6000 616	Nut
10	1	2099 522	MEDALLION, Hood Top (15-06-6)
	2	6000 616	Nut
11	1	2298 675	MOULDING PACKAGE, Hood Front (15-25-2)
	4	6001 217	Clip
	4	271 472	Nut
12	1	2299 358-9	MOULDING PACKAGE, Fender Side Upper to Lower (12-15-2)
	2	---- ---	Seal
	2	9415 250	Nut
13	1	2254 524	COVER, Windshield Outside Finish Lower Moulding Joint (23-23-66)
14	1	2298 552	MOULDING PACKAGE, Windshield Outside Finish Upper (23-23-65)
	8	6000 966	Retainer
15	1	2298 571-2	MOULDING PACKAGE, Windshield Outside Finish Lower (23-23-65)
	10	6000 966	Retainer
16	1	2166 970-1	MOULDING, Windshield Outside Finish Lower End (23-23-65)
17	1	2166 966-7	MOULDING, Windshield Outside Finish Side (23-23-65)
18	1	2421 432	MOULDING PACKAGE, Front Door Upper Right (23-23-32)
	1	6001 030	Retainer
	1	152 259	Nut
	6	6001 031	Clip
	1	2252 199	MOULDING, Front Door Upper Front Left (23-23-32)
	1	2421 433	MOULDING PACKAGE, Front Door Upper Left Rear (23-23-32)
	1	6001 030	Retainer
	1	152 259	Nut
	6	6001 031	Clip
19	4	2254 031	MOULDING, Front Door Vent Wing Division Channel (23-23-36)
20	1	2216 042-3	MOULDING, Roof Panel Outside Finish Front (23-23-42)
21	1	2252 270-1	MOULDING, Roof Panel Outside Finish Side Rear (23-23-42)
22	1	2216 218-9	MEDALLION, Roof Panel Side (23-34-334)
	4	152 259	Nut
23	1	2298 554-5	MOULDING PACKAGE, Rear Window Outside Finish Side (23-23-52)
	6	6000 966	Retainer
24	1	2254 066-7	COVER, Rear Window Outside Finish Side to Lower Moulding Joint (23-23-41)
25	1	2298 556	MOULDING PACKAGE, Rear Window Outside Finish Upper (23-23-52)
	5	6000 966	Retainer
26	1	2421 206	MOULDING PACKAGE, Rear Window Outside Finish Lower (23-23-52)
	10	6000 966	Retainer
27	1	2167 974	MEDALLION, Deck Lid (23-19-114)
	2	6000 960	Clip
28	1	2254 773	NAME PLATE, Deck Opening Lower Panel (23-34-184)
	3	152 259	Nut and Washer
29	1	2275 919	MOULDING PACKAGE, Deck Lid (23-23-30)
	6	6000 996	Retainer
	6	441 256	Nut
30	1	2254 370-1	PANEL, Deck Opening Lower Panel Finish (23-23-28)
	8	---- ---	Nut
	7	9414 080	Screw
31	2	2298 732	CAP PACKAGE, Quarter Panel Moulding End (23-23-41)
	2	---- ---	Washer
	2	274 752	Nut
32	1	2167 970-1	ORNAMENT, Quarter Panel Louver (23-23-334)
	4	6022 997	Washer
	4	2254 396	Spacer
	6	---- ---	Nut
33	1	2421 438-9	MOULDING PACKAGE, Quarter Panel Lower (23-23-39)
	2	6001 030	Retainer
	2	152 259	Nut
	14	6001 031	Clip
34	1	2421 436-7	MOULDING PACKAGE, Quarter Panel Upper (23-23-39)
	2	6001 030	Retainer
	2	152 259	Nut
	14	6001 031	Clip
35	1	2255 928-9	MOULDING, Rear Door Lower Rear (23-23-33)
36	1	2421 434-5	MOULDING PACKAGE, Rear Door Lower Front (23-23-33)
	8	6001 031	Clip
37	1	2421 444-5	MOULDING PACKAGE, Rear Door Upper (23-23-33)
	10	6001 031	Clip
38	1	2255 926-7	MOULDING, Front Door Lower Rear (23-23-32)
39	2	2421 692	MOULDING PACKAGE, Body Side Sill (23-23-2)
	4	6023 331	Screw
	10	6000 995	Retainer
40	1	2421 430-1	MOULDING PACKAGE, Front Door Lower Front (23-23-32)
	2	6001 030	Retainer
	2	152 259	Nut
	8	6001 031	Clip
41	1	2275 943-4	MOULDING PACKAGE, Front Door Lower (23-23-32)
	6	6000 993	Clip
	4	6000 951	Clip
	4	151 497	Nut

All Packages Include Attaching Parts

Part Type Code is Indicated in Parentheses

19x9427A

MOULDINGS - DART 440 SPORT SWEEP (SD-H) SPECIAL 4 DOOR SEDAN

MyMopar.com

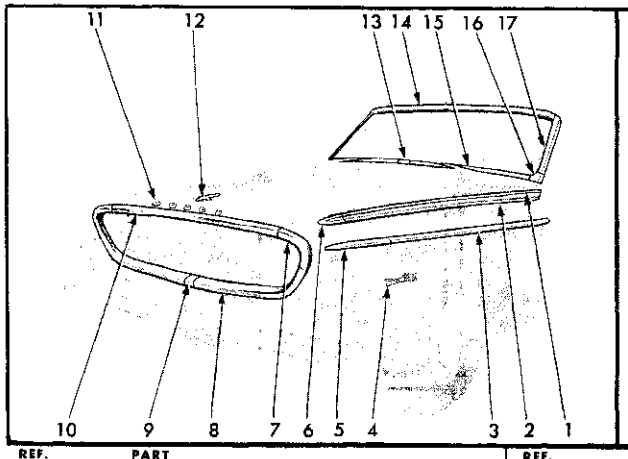

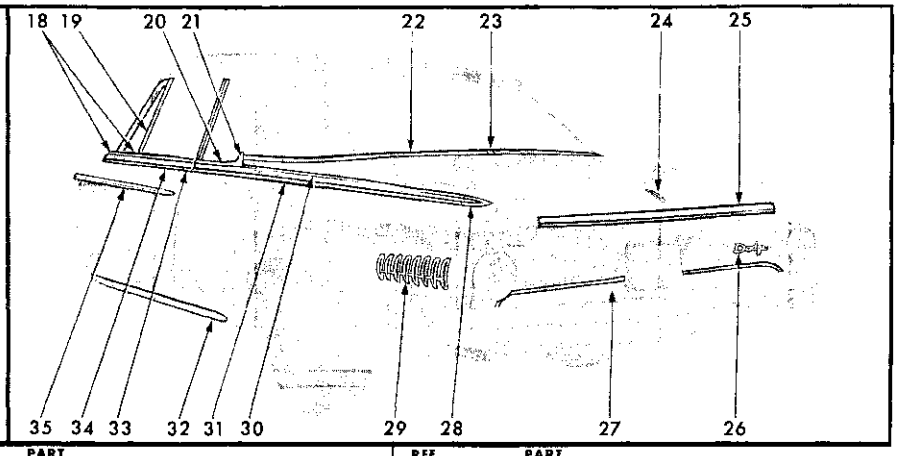

REF. NO.	QTY	PART NUMBER	DESCRIPTION
1	1	2299 354-5	MOULDING PACKAGE, Fender Side Upper (12-15-2)
	18	6001 031	Clip
	4	6006 520	Retainer
	4	6000 637	Nut
2	1	2299 356-7	MOULDING PACKAGE, Fender Side Lower (12-15-2)
	18	6001 031	Clip
	4	6006 520	Retainer
	4	6000 637	Nut
3	1	2298 678-9	MOULDING PACKAGE, Fender Side Rear (12-15-2)
	2	6000 993	Clip
	2	6001 236	Clip
	8	6001 051	Retainer
	8	6006 438	Nut
4	2	2099 966	NAME PLATE, Fender Side (Dart 440)(12-15-21)
	6	6000 616	Nut
5	1	2298 676-7	MOULDING PACKAGE, Fender Side Front (12-15-2)
	6	6001 236	Clip
6	1	2299 358-9	MOULDING PACKAGE, Fender Side Upper to Lower (12-15-2)
	2	---- ---	Seal
	2	9415 250	Nut
7	1	2298 683-4	MOULDING PACKAGE, Fender Front Upper (12-15-2)
	2	6000 963	Clip
	2	6001 225	Clip
	2	6001 227	Clip
8	1	2298 681-2	MOULDING PACKAGE, Radiator Grille Lower Panel (7-16-36)
	8	6001 227	Clip
9	1	2298 680	COVER, Radiator Grille Lower Panel Moulding Joint (7-16-44)
	1	---- ---	Nut
10	1	2298 675	MOULDING PACKAGE, Hood Front (15-25-2)
	4	6001 217	Clip
	4	271 472	Nut
11	2	2099 517	LETTER, Hood Front "D" (15-06-16)
	1	2099 518	"O"
	1	2099 519	"G"
	1	2099 520	"E"
	8	6000 616	Nut

All Packages Include Attaching Parts

REF. NO.	QTY	PART NUMBER	DESCRIPTION
12	1	2099 522	MEDALLION, Hood Top (15-06-6)
	2	6000 616	Nut
13	1	2254 524	COVER, Windshield Outside Finish Lower Moulding Joint (23-23-66)
14	1	2252 056-7	MOULDING and EXTENSION, Windshield Header Outside (23-23-65)
	7	274 109	Screw
15	1	2298 571-2	MOULDING PACKAGE, Windshield Outside Finish Lower (23-23-65)
	10	6000 966	Retainer
16	1	2166 970-1	MOULDING, Windshield Outside Finish Lower End (23-23-65)
17	1	2166 966-7	MOULDING, Windshield Outside Finish Side (23-23-65)
18	1	2299 380	MOULDING PACKAGE, Door Upper Right (23-23-32)
	7	6000 903	Clip
	1	6006 520	Retainer
	1	271 472	Nut
	1	2252 199	MOULDING PACKAGE, Door Upper Front Left (23-23-32)
	2	9417 530	Screw
	1	2299 379	MOULDING PACKAGE, Door Upper Rear Left (23-23-32)
	7	6001 031	Clip
	1	6006 520	Retainer
	1	271 472	Nut
19	4	2254 031	MOULDING, Door Vent Wing Division Channel (23-23-36)
20	2	2299 381	MOULDING PACKAGE, Quarter Panel Upper Front (23-23-39)
	12	6000 903	Clip
21	1	2252 194-5	MOULDING, Quarter Panel Upper Center (23-23-39)
	6	6023 247	Screw
22	1	2251 638-9	MOULDING, Quarter Panel Belt Rear (23-23-39)
	16	6000 433	Fastener
23	1	2251 635	CAP, Quarter Panel Belt Moulding Rear Center (23-23-41)
24	1	2167 974	MEDALLION, Deck Lid (23-19-114)
	2	6000 960	Clip
25	1	2275 919	MOULDING PACKAGE, Deck Lid (23-23-30)
	6	6000 996	Retainer
	6	441 256	Nut

REF. NO.	QTY	PART NUMBER	DESCRIPTION
26	1	2254 773	NAME PLATE, Deck Opening Lower Panel (23-34-184)
	3	152 259	Nut and Washer
27	1	2254 370-1	PANEL, Deck Lower Panel Finish (23-23-28)
	7	9414 080	Screw
	8	---- ---	Nut
28	2	2298 732	CAP PACKAGE, Quarter Panel Outside Upper and Lower Moulding Rear End (23-23-41)
	1	---- ---	Washer
	1	274 752	Nut
29	1	2167 970-1	ORNAMENT, Quarter Panel Louver (23-23-334)
	4	6022 997	Washer
	4	2254 396	Spacer
	6	---- ---	Nut
30	1	2299 362-3	MOULDING PACKAGE, Quarter Panel Upper Rear (23-23-39)
	16	6001 031	Clip
	2	6006 520	Retainer
	2	271 472	Nut
31	1	2299 377-8	MOULDING PACKAGE, Quarter Panel Lower (23-23-39)
	24	6000 903	Clip
	2	6006 520	Retainer
	2	271 472	Nut
32	2	2421 692	MOULDING PACKAGE, Body Side Sill (23-23-2)
	4	6023 331	Screw
	10	6000 995	Retainer
33	1	2252 238-9	MOULDING, Door Lower Rear (23-23-32)
34	1	2299 375-6	MOULDING PACKAGE, Door Lower Front (23-23-32)
	10	6000 903	Clip
	2	6006 520	Retainer
	2	271 472	Nut
35	1	2275 943-4	MOULDING PACKAGE, Door Lower (23-23-32)
	6	6000 993	Clip
	4	6000 951	Clip
	4	151 497	Nut

Part Type Code is Indicated in Parentheses **19x9430A**

MOULDINGS - DART 440 SPORT SWEEP (SD-H) CONVERTIBLE COUPE

MyMopar.com

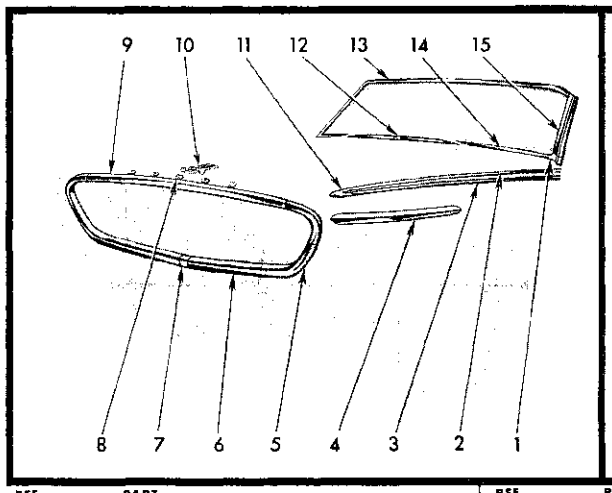

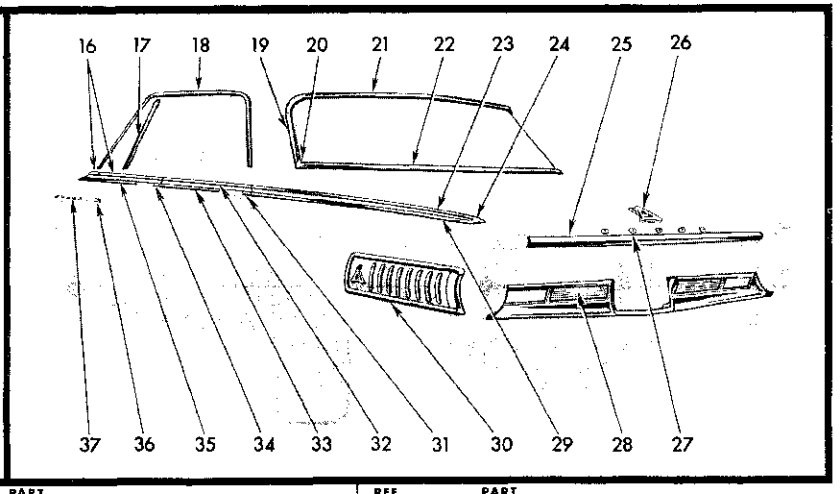

REF. NO.	QTY	PART NUMBER	DESCRIPTION
1	1	2166 970-1	MOULDING, Windshield Outside Finish Lower End (23-23-65)
2	1	2299 354-5	MOULDING PACKAGE, Fender Side Upper (12-15-2)
	18	6001 031	Clip
	4	6006 520	Retainer
	4	6000 637	Nut
3	1	2299 356-7	MOULDING PACKAGE, Fender Side Lower (12-15-2)
	18	6001 031	Clip
	4	6006 520	Retainer
	4	6000 637	Nut
4	1	2299 352-3	MOULDING PACKAGE, Fender Side Front (12-15-2)
	2	6006 024	Nut
	4	6023 361	Screw
	4	1602 873	Washer
5	1	2298 683-4	MOULDING PACKAGE, Fender Front Upper (12-15-2)
	2	6000 963	Clip
	2	6001 225	Clip
	2	6001 227	Clip
6	1	2298 681-2	MOULDING PACKAGE, Radiator Grille Lower Panel (7-16-36)
	8	6001 227	Clip
7	1	2298 680	COVER, Radiator Grille Lower Panel Moulding Joint (7-16-44)
	1	---- ---	Nut
8	2	2099 517	LETTER, Hood Front "D" (15-06-16)
	1	2099 518	"O"
	1	2099 519	"G"
	1	2099 520	"E"
	8	6000 616	Nut
9	1	2298 675	MOULDING PACKAGE, Hood Front (15-25-2)
	4	6001 217	Clip
	4	271 472	Nut
10	1	2099 522	MEDALLION, Hood Top (15-06-6)
	2	6000 616	Nut
11	1	2299 358-9	MOULDING PACKAGE, Fender Side Upper to Lower (12-15-2)
	2	---- ---	Seal
	2	9415 250	Nut
12	1	2254 524	COVER, Windshield Outside Finish Lower Moulding Joint (23-23-66)
13	1	2298 552	MOULDING PACKAGE, Windshield Outside Finish Upper (23-23-65)
	8	6000 966	Retainer

All Packages Include Attaching Parts

REF. NO.	QTY	PART NUMBER	DESCRIPTION
14	1	2298 571-2	MOULDING PACKAGE, Windshield Outside Finish Lower (23-23-65)
	10	6000 966	Retainer
15	1	2166 966-7	MOULDING, Windshield Outside Finish Side (23-23-65)
16	1	2421 432	MOULDING PACKAGE, Front Door Upper Right (23-23-32)
	1	6001 030	Retainer
	1	152 259	Nut
	6	6001 019	Clip
	1	2252 199	MOULDING, Front Door Upper Front Left (23-23-32)
	1	2421 433	MOULDING PACKAGE, Front Door Upper Rear Left (23-23-32)
	1	6001 030	Retainer
	1	152 259	Nut
	6	6001 019	Clip
17	4	2254 031	MOULDING, Front Door Vent Wing Division Channel (23-23-36)
18	1	2216 090-1	MOULDING, Roof Side Drain Trough (23-59-61)
19	1	2298 554-5	MOULDING PACKAGE, Rear Window Outside Finish Side (23-23-52)
	6	6000 966	Retainer
20	1	2254 066-7	COVER, Rear Window Outside Finish Side to Lower Moulding Joint (23-23-41)
21	1	2298 556	MOULDING PACKAGE, Rear Window Outside Finish Upper (23-23-52)
	5	6000 966	Retainer
22	1	2421 206	MOULDING PACKAGE, Rear Window Outside Finish Lower (23-23-52)
	10	6000 966	Retainer
23	1	2421 436-7	MOULDING PACKAGE, Quarter Panel Upper (23-23-39)
	2	6001 030	Retainer
	2	152 259	Nut
	14	6001 019	Clip
24	2	2298 732	CAP PACKAGE, Quarter Panel Outside Upper and Lower Moulding Rear End (23-23-41)
	2	---- ---	Washer
	2	274 752	Nut
25	1	2275 919	MOULDING PACKAGE, Deck Lid (23-23-30)
	6	6000 996	Retainer
	6	441 256	Nut
26	1	2252 207	MEDALLION, Deck Lid (23-19-114)
	2	2252 282	Seal
	2	6000 960	Clip

REF. NO.	QTY	PART NUMBER	DESCRIPTION
27	2	2099 517	"D" LETTER, Deck Lid (23-19-114)
	1	2099 518	"O"
	1	2099 519	"G"
	1	2099 520	"E"
	10	6000 616	Nut
28	1	2252 208-9	PANEL, Deck Opening Lower Panel Finish (23-23-28)
	1	---- ---	Screw
	12	6023 276	Nut
29	1	2421 438-9	MOULDING PACKAGE, Quarter Panel Lower (23-23-39)
	2	6001 030	Retainer
	2	152 259	Nut
	14	6001 019	Clip
30	1	2255 036-7	ORNAMENT, Quarter Outside Panel, Black (23-34-334)
	1	2255 038-9	Red
	1	2255 040-1	Brown
	1	2255 042-3	Beige
	1	2255 044-5	Green
	1	2255 046-7	Blue
	1	1961 740	Washer
	1	274 752	Nut
	1	2252 297	Seal
31	1	2255 928-9	MOULDING, Rear Door Lower Rear (23-23-33)
32	1	2421 444-5	MOULDING PACKAGE, Rear Door Upper (23-23-33)
	10	6001 031	Clip
33	1	2421 434-5	MOULDING PACKAGE, Rear Door Lower Front (23-23-33)
	8	6001 019	Clip
34	1	2255 926-7	MOULDING, Front Door Lower Rear (23-23-32)
35	1	2421 430-1	MOULDING PACKAGE, Front Door Lower Front (23-23-32)
	2	6001 030	Retainer
	2	152 259	Nut
	8	6001 019	Clip
36	2	2252 308	NUMERALS "500", Front Door (23-11-21)
	4	6000 176	Clip
37	2	2252 228	"P" LETTER, Front Door Name (23-11-21)
	2	2252 229	"O"
	2	2252 230	"L"
	4	2252 231	"A"
	2	2252 232	"R"
	24	6000 176	Clip

Part Type Code is Indicated in Parentheses **19x9389A**

MOULDINGS - DODGE POLARA 500 SD2(P) SPECIAL 4 DOOR SEDAN

MyMopar.com

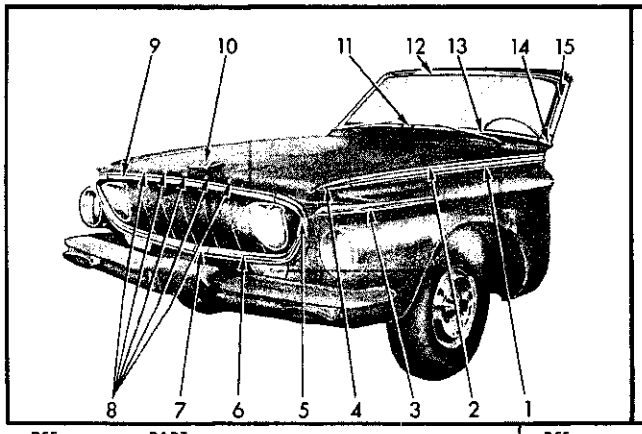

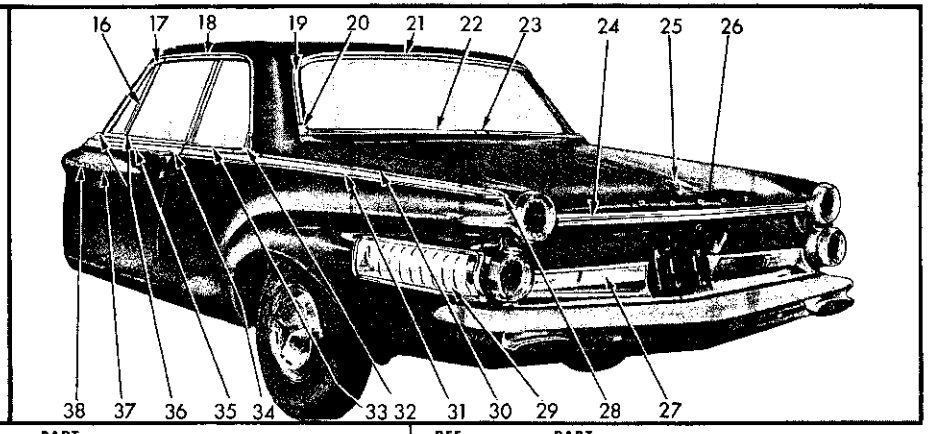

REF. NO.	QTY	PART NUMBER	DESCRIPTION
1	1	2299 356-7	MOULDING PACKAGE, Fender Side Lower (12-15-2)
	18	6001 031	Clip
	4	6006 520	Retainer
	4	6000 637	Nut
2	1	2299 354-5	MOULDING PACKAGE, Fender Side Upper (12-15-2)
	18	6001 031	Clip
	4	6006 520	Retainer
	4	6000 637	Nut
3	1	2299 352-3	MOULDING PACKAGE, Fender Side Front (12-15-2)
	2	6006 024	Nut
	4	423 539	Screw
	4	1602 873	Washer
4	1	2299 358-9	MOULDING PACKAGE, Fender Side Upper to Lower (12-15-2)
	2	---- ---	Seal
	2	9415 250	Nut
5	1	2298 683-4	MOULDING PACKAGE, Fender Front Upper (12-15-2)
	2	6000 963	Clip
	2	6001 225	Clip
	2	6001 227	Clip
6	1	2298 681-2	MOULDING PACKAGE, Radiator Grille Panel (7-16-36)
	8	6001 227	Clip
7	1	2298 680	COVER, Radiator Grille Panel Moulding Joint (7-16-44)
	1	---- ---	Nut
8	2	2099 517	LETTER, Hood Front "D" (15-06-16)
	1	2099 518	"O"
	1	2099 519	"G"
	1	2099 520	"E"
9	1	2298 675	MOULDING PACKAGE, Hood Front (15-25-2)
10	1	2276 556	ORNAMENT, Hood Top (15-03-18)
11	1	2254 524	COVER, Windshield Outside Finish Lower Moulding Joint (23-23-66)
12	1	2298 552	MOULDING PACKAGE, Windshield Outside Finish Upper (23-23-65)
	8	6000 966	Retainer
13	1	2298 571-2	MOULDING PACKAGE, Windshield Outside Finish Lower (23-23-65)
	10	6000 966	Retainer
14	1	2166 970-1	MOULDING, Windshield Outside Finish Lower End (23-23-65)
15	1	2166 966-7	MOULDING, Windshield Outside Finish Side (23-23-65)
16	4	2254 031	MOULDING, Door Vent Wing Division Channel (23-23-36)
17	1	2254 314-5	CAP, Roof Side Drain Trough Moulding Front End (23-59-57)
18	1	2216 090-1	MOULDING, Roof Side Drain Trough (23-59-61)
19	1	2298 554-5	MOULDING PACKAGE, Rear Window Outside Finish Side (23-23-52)
	6	6000 966	Retainer
20	1	2254 066-7	COVER, Rear Window Outside Finish Side to Lower Moulding Joint (23-23-41)
21	1	2298 556	MOULDING PACKAGE, Rear Window Outside Finish Upper (23-23-52)
	5	6000 966	Retainer
22	1	2421 206	MOULDING PACKAGE, Rear Window Outside Finish Lower (23-23-52)
	10	6000 966	Retainer
23	1	2254 524	COVER, Rear Window Outside Finish Lower Moulding Joint (23-23-41)
24	1	2275 919	MOULDING PACKAGE, Deck Lid (23-23-30)
	6	6000 996	Retainer
	6	441 256	Nut
25	1	2252 207	MEDALLION, Deck Lid (23-19-114)
	2	2252 282	Seal
	2	6000 960	Clip
26	2	2099 517	"D", Deck Lid Name Letter (23-19-114)
	1	2099 518	"O"
	1	2099 519	"G"
	1	2099 520	"E"
	10	6000 616	Nut
27	1	2252 208-9	PANEL, Deck Opening Lower Panel Finish (23-23-28)
	1	---- ---	Screw
	12	---- ---	Nut
28	2	2298 732	CAP PACKAGE, Quarter Panel Outside Upper and Lower Moulding Rear End (23-23-41)
	1	---- ---	Washer
	1	274 752	Nut
29	1	2255 036-7	ORNAMENT, Quarter Outside Panel, Black (23-34-334)
	1	2255 038-9	Red
	1	2255 040-1	Brown
	1	2255 042-3	Beige
	1	2255 044-5	Green Metallic
	1	2255 046-7	Blue Metallic
	16	1961 740	Washer
	16	274 752	Nut
	16	2252 297	Seal
30	1	2299 360-1	MOULDING PACKAGE, Quarter Panel Upper Rear (23-23-39)
	12	6001 031	Clip
	4	6006 520	Retainer
	4	271 472	Nut
31	1	2299 377-8	MOULDING PACKAGE, Quarter Panel Lower (23-23-39)
	24	6001 031	Clip
	2	6006 520	Retainer
	2	271 472	Nut
32	1	2298 730-1	MOULDING PACKAGE, Quarter Panel Upper Center (23-23-39)
	4	---- ---	Seal
	4	6000 829	Clip
33	2	2299 382	MOULDING PACKAGE, Quarter Panel Upper Front (23-23-39)
	12	6001 031	Clip
34	1	2252 238-9	MOULDING, Door Lower Rear (23-23-32)
35	1	2299 375-6	MOULDING PACKAGE, Door Lower Front (23-23-32)
	10	6001 031	Clip
	2	6006 520	Retainer
	2	271 472	Nut
36	1	2299 380	MOULDING PACKAGE, Door Upper Right (23-23-32)
	7	6001 031	Clip
	1	6006 520	Retainer
	1	271 472	Nut
	1	2252 199	MOULDING, Door Upper Front Left (23-23-32)
	2	9417 530	Screw
	1	2299 379	MOULDING PACKAGE, Door Upper Rear Left (23-23-32)
	7	6001 031	Clip
	1	6006 520	Retainer
	1	271 472	Nut
37	2	2252 308	NUMERALS "500", Door (23-11-21)
	4	6000 176	Clip
38	2	2252 228	"P", Door Name Letter (23-11-21)
	2	2252 229	"O"
	2	2252 230	"L"
	4	2252 231	"A"
	2	2252 232	"R"
	24	6000 176	Clip

All Packages Include Attaching Parts

Part Type Code is Indicated in Parentheses

19x9308A

MOULDINGS - DODGE SD2(P) SPECIAL CLUB COUPE

MyMopar.com

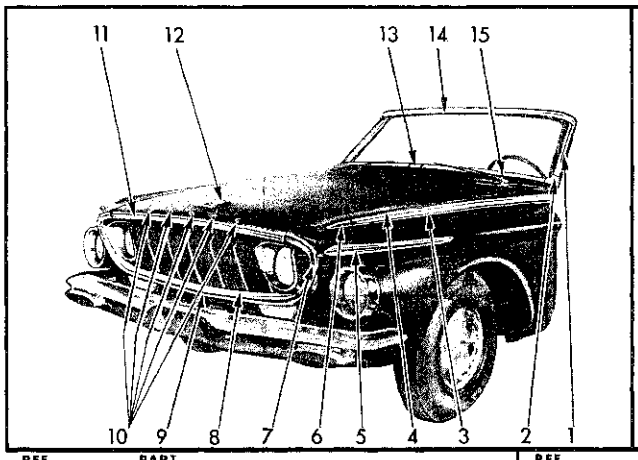

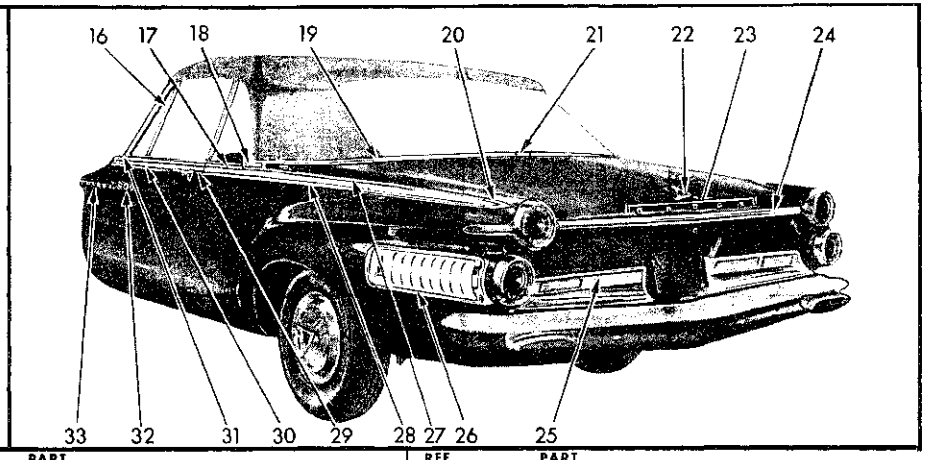

REF. NO.	QTY	PART NUMBER	DESCRIPTION
1	1	2166 966-7	MOULDING, Windshield Outside Finish Side (23-23-65)
2	1	2166 970-1	MOULDING, Windshield Outside Finish Lower End (23-23-65)
3	1	2299 356-7	MOULDING PACKAGE, Fender Side Lower (12-15-2)
	18	6001 031	Clip
	4	6006 520	Retainer
	4	6000 637	Nut
4	1	2299 354-5	MOULDING PACKAGE, Fender Side Upper (12-15-2)
	18	6001 031	Clip
	4	6006 520	Retainer
	4	6000 637	Nut
5	1	2299 352-3	MOULDING PACKAGE, Fender Side Front (12-15-2)
	2	6006 024	Nut
	4	423 539	Screw
	4	1602 873	Washer
6	1	2299 358-9	MOULDING PACKAGE, Fender Side Upper to Lower (12-15-2)
	2	---- ---	Seal
	2	9415 250	Nut
7	1	2298 683-4	MOULDING PACKAGE, Fender Front Upper (12-15-2)
	2	6000 963	Clip
	2	6001 225	Clip
	2	6001 227	Clip
8	1	2298 681-2	MOULDING PACKAGE, Radiator Grille Panel (7-16-36)
	8	6001 227	Clip
9	1	2298 680	COVER, Radiator Grille Panel Moulding Joint (7-16-44)
	1	---- ---	Nut
10	2	2099 517	LETTER, Hood Front "D" (15-06-16)
	1	2099 518	LETTER, Hood Front "O"
	1	2099 519	LETTER, Hood Front "G"
	1	2099 520	LETTER, Hood Front "E"
	10	6000 616	Nut
11	1	2298 675	MOULDING PACKAGE, Hood Front (15-25-2)
12	1	2276 556	ORNAMENT, Hood Top (15-03-18)
13	1	2254 524	COVER, Windshield Outside Finish Lower Moulding Joint (23-23-66)
14	1	2252 056-7	MOULDING and EXTENSION, Windshield Header Outside (23-23-65)
	7	274 109	Screw
15	1	2298 571-2	MOULDING PACKAGE, Windshield Outside Finish Lower (23-23-65)
	10	6000 966	Retainer
16	4	2254 031	MOULDING, Door Vent Wing Division Channel (23-23-36)
17	2	2299 381	MOULDING PACKAGE, Quarter Panel Upper Front (23-23-39)
	12	6001 031	Clip
18	1	2252 194-5	MOULDING, Quarter Panel Upper Center (23-23-39)
	6	6023 247	Screw
19	1	2251 638-9	MOULDING, Quarter Panel Belt Rear (23-23-39)
20	2	2298 732	CAP PACKAGE, Quarter Panel Outside Upper and Lower Moulding Rear End (23-23-41)
	1	---- ---	Washer
	1	274 752	Nut
21	1	2251 635	CAP, Quarter Panel Belt Moulding Rear Center (23-23-41)
22	1	2252 207	MEDALLION, Deck Lid (23-19-114)
	2	2252 282	Seal
	2	6000 960	Clip
23	2	2099 517	"D", Deck Lid Name Letter (23-19-114)
	1	2099 518	"O"
	1	2099 519	"G"
	1	2099 520	"E"
	10	6000 616	Nut
24	1	2275 919	MOULDING PACKAGE, Deck Lid (23-23-30)
	6	6000 996	Retainer
	6	441 256	Nut
25	1	2252 208-9	PANEL, Deck Opening Lower Panel Finish (23-23-28)
	1	---- ---	Screw
	12	---- ---	Nut
26	1	2255 036-7	ORNAMENT, Quarter Outside Panel, Black (23-34-334)
	1	2255 038-9	ORNAMENT, Quarter Outside Panel, Red (23-34-334)
	1	2255 040-1	ORNAMENT, Quarter Outside Panel, Brown (23-34-334)
	1	2255 042-3	ORNAMENT, Quarter Outside Panel, Beige (23-34-334)
	1	2255 044-5	ORNAMENT, Quarter Outside Panel, Green Metallic (23-34-334)
	1	2255 046-7	ORNAMENT, Quarter Outside Panel, Blue Metallic (23-34-334)
	16	1961 740	Washer
	16	274 752	Nut
	16	2252 297	Seal
27	1	2299 362-3	MOULDING PACKAGE, Quarter Panel Upper Rear (23-23-39)
	16	6001 031	Clip
	2	6006 520	Retainer
	2	271 472	Nut
28	1	2299 377-8	MOULDING PACKAGE, Quarter Panel Lower (23-23-39)
	24	6001 031	Clip
	2	6006 520	Retainer
	2	271 472	Nut
29	1	2252 238-9	MOULDING, Door Lower Rear (23-23-32)
30	1	2299 375-6	MOULDING PACKAGE, Door Lower Front (23-23-32)
	10	6001 031	Clip
	2	6006 520	Retainer
	2	271 472	Nut
31	1	2299 380	MOULDING PACKAGE, Door Upper Right (23-23-32)
	7	6001 031	Clip
	1	6006 520	Retainer
	1	271 472	Nut
	1	2252 199	MOULDING PACKAGE, Door Upper Front Left (23-23-32)
	2	9417 530	Screw
	1	2299 379	MOULDING PACKAGE, Door Upper Rear Left (23-23-32)
	7	6001 031	Clip
	1	6006 520	Retainer
	1	271 472	Nut
32	2	2252 308	NUMERALS "500", Door (23-11-21)
	4	6000 176	Clip
33	2	2252 228	"P", Door Name Letter (23-11-21)
	2	2252 229	"O"
	2	2252 230	"L"
	4	2252 231	"A"
	2	2252 232	"R"
	24	6000 176	Clip

All Packages Include Attaching Parts

Part Type Code is Indicated in Parentheses

19x9307A

MOULDINGS - DODGE SD2(P) CONVERTIBLE COUPE

MyMopar.com

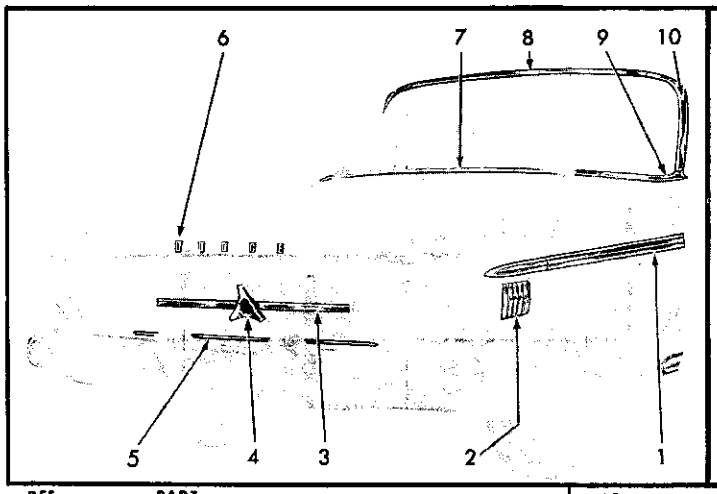

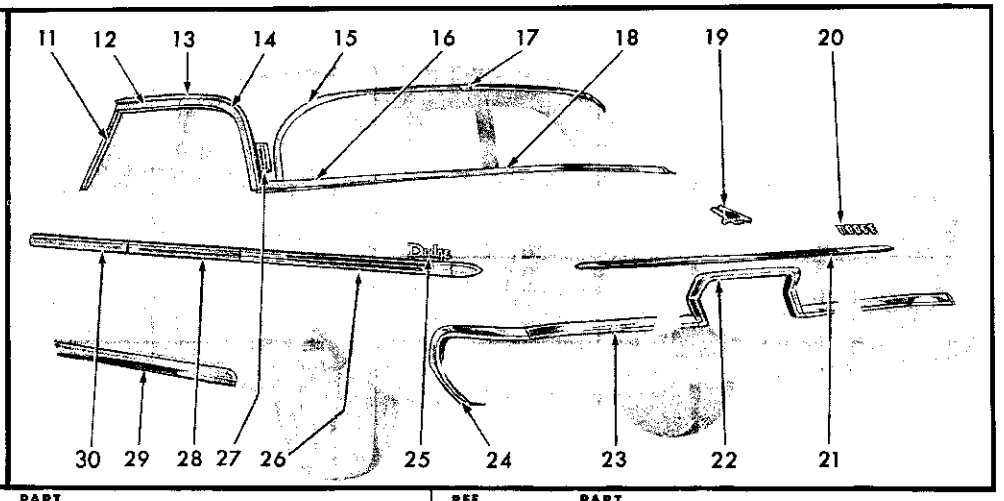

REF. NO.	QTY	PART NUMBER	DESCRIPTION
1	2	2421 652	MOULDING PACKAGE, Fender Side (12-15-2)
	6	6000 716	Clip
	6	6010 189	Clip 2 6006 412 Clip
	2	6010 215	Clip 8 ---- --- Nut
2	2	2240 824	LOUVERS PACKAGE, Fender Side (12-15-21)
	8	2189 165	Seal 8 6000 616 Nut
3	2	2421 653	MOULDING PACKAGE, Radiator Grille Center (7-16-36)
	6	6001 104	Clip
	6	2417 194	Spacer 6 116 000 Nut
4	1	2266 831	ORNAMENT, Radiator Grille (7-17-1)
	3	274 752	Nut
5	1	2421 884	MOULDING PACKAGE, Radiator Grille Lower (7-16-36)
	6	6001 030	Retainer
	6	152 259	Nut
6	1	2417 189	LETTER, Hood Front Name "D" (15-06-16)
	1	2417 190	"O"
	1	2417 191	"D"
	1	2417 192	"G"
	1	2417 193	"E"
	10	6023 260	Nut
7	1	2084 997	MOULDING PACKAGE, Windshield Outside Finish Lower Center (23-23-65)
	5	6000 685	Clip
8	1	2240 768	MOULDING PACKAGE, Windshield Outside Finish Upper (23-23-65)
	5	6000 927	Clip
9	1	2196 272-3	MOULDING PACKAGE, Windshield Outside Finish Lower End (23-23-65)
	2	6006 685	Clip
10	1	2240 769-70	MOULDING PACKAGE, Windshield Outside Finish Side (23-23-65)
	8	6022 010	Screw
11	1	2240 873-4	MOULDING PACKAGE, Front Door Window Frame Front (23-23-32)
	6	6023 098	Screw
12	1	2240 866-7	MOULDING PACKAGE, Front Door Window Frame Upper (23-23-32)
	6	6022 059	Screw
13	1	1909 636-7	MOULDING or COVER, Roof Side Drain Trough (23-59-61)
14	1	2240 868-9	MOULDING PACKAGE, Rear Door Window Frame Upper (23-23-33)
	6	6022 059	Screw
15	1	2196 282-3	MOULDING PACKAGE, Rear Window Outside Finish Upper and Side (23-23-52)
	10	6000 692	Clip
16	1	2275 025-6	MOULDING PACKAGE, Rear Window Outside Finish Lower End (23-23-52)
	2	6000 688	Clip
	2	6000 733	Clip
17	1	2093 479	CAP, Rear Window Outside Moulding Upper Center (23-23-41)
18	1	2196 292	MOULDING PACKAGE, Rear Window Outside Finish Lower Center (23-23-52)
	7	6000 689	Clip
19	1	2423 194	MEDALLION, Deck Lid (23-19-114)
	1	---- ---	Washer
	1	6000 960	Clip
	1	6006 215	Nut
20	2	2417 189	"D", Deck Lid Letter (23-19-114)
	1	2417 190	"O"
	1	2417 192	"G"
	1	2417 193	"E"
	5	152 259	Nut
21	1	2421 589	MOULDING PACKAGE, Deck Lid (23-23-30)
	3	6001 103	Retainer
	3	6022 007	Washer
	1	441 256	Nut
	2	151 497	Nut
22	1	2275 994	MOULDING PACKAGE, Deck Lower Panel License Depression (23-23-23)
	2	6022 052	Washer
	2	9411 618	Nut
	1	2240 987	MOULDING PACKAGE, Deck Lower Panel License Depression (use w/o Side Mouldings) (23-23-23)
	4	6000 970	Clip
	4	---- ---	Nut
23	1	2275 909-10	MOULDING PACKAGE, Deck Lower Panel (use w/2275 994) (23-23-23)
	8	6006 165	Washer
	8	6022 052	Washer
	8	9411 618	Nut
24	1	2275 911-2	MOULDING PACKAGE, Quarter Panel Bumper Depression (23-23-39)
	2	6006 165	Washer
	6	6022 052	Washer
	6	9411 618	Nut
25	2	2254 773	NAME PLATE, Dodge Quarter Outside Panel (23-34-238)
	3	1839 995	Nut
26	1	2421 594-5	MOULDING PACKAGE, Quarter Panel Lower (23-23-39)
	12	6000 716	Retainer
	2	6010 189	Retainer
	2	6023 013	Washer
	2	---- ---	Nut
27	1	2254 720-1	MEDALLION, Roof Panel Side (23-34-334)
28	1	2421 590-1	MOULDING PACKAGE, Rear Door Lower (23-23-33)
	8	6006 429	Retainer
	2	6010 189	Retainer
	2	---- ---	Nut
29	2	2421 588	MOULDING PACKAGE, Body Side Sill (23-23-2)
	8	6000 942	Clip
	8	9413 197	Screw
	4	9416 706	Screw
30	1	2421 598-9	MOULDING PACKAGE, Front Door Lower (23-23-32)
	10	6006 429	Clip

All Packages Include Attaching Parts

MOULDINGS - DODGE 880 SD3(L) 4 DOOR SEDAN

Part Type Code is Indicated in Parentheses **19x9417**

MyMopar.com

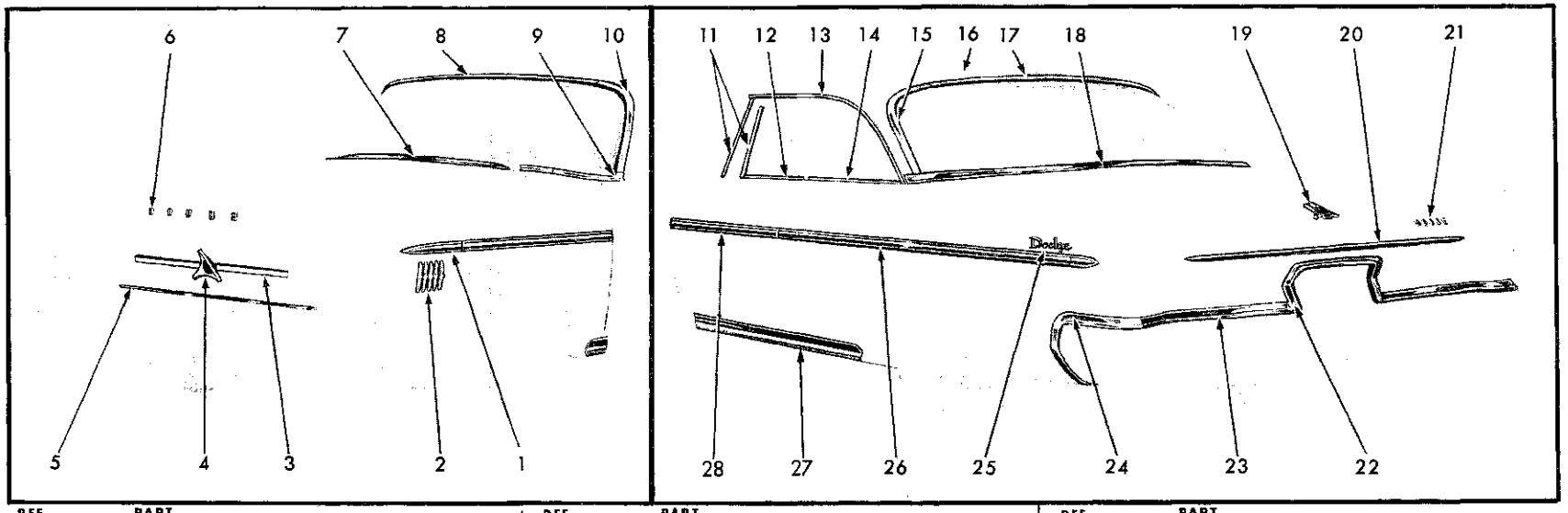

REF. NO.	QTY	PART NUMBER	DESCRIPTION
1	2	2421 652	MOULDING PACKAGE, Fender Side (12-15-2)
	6	6000 716	Clip
	6	6010 189	Clip 2 6006 412 Clip
	2	6010 215	Clip 8 ---- --- Nut
2	2	2240 824	LOUVERS, Fender Side (12-15-21)
	8	2189 165	Seal 8 6000 616 Nut
3	2	2421 653	MOULDING PACKAGE, Radiator Grille Center (7-16-36)
	6	6001 104	Clip
4	1	2266 831	ORNAMENT, Radiator Grille (7-17-1)
	3	274 752	Nut
5	1	2421 884	MOULDING PACKAGE, Radiator Grille Lower (7-16-36)
	6	6001 030	Retainer 6 152 259 Nut
6	1	2417 189	LETTER, Hood Front Name "D" (15-06-16)
	1	2417 190	"O"
	1	2417 191	"D", Center
	1	2417 192	"G"
	1	2417 193	"E"
	10	6023 260	Nut
7	1	2084 997	MOULDING PACKAGE, Windshield Outside Finish Lower Center (23-23-65)
	5	6000 685	Clip
8	1	2240 768	MOULDING PACKAGE, Windshield Outside Finish Upper (23-23-65)
	5	6000 927	Clip
9	1	2196 272-3	MOULDING PACKAGE, Windshield Outside Finish Lower End (23-23-65)
	2	6000 685	Clip
10	1	2240 769-70	MOULDING PACKAGE, Windshield Outside Finish Side (23-23-65)
	8	6022 010	Screw
11	1	2254 484-5	FRAME and CHANNEL, Door Vent Wing Division (23-64-48)
12	1	2298 612-3	MOULDING PACKAGE, Door Belt (23-23-32)
	10	6001 247	Clip
13	1	2093 174-5	MOULDING, Roof Side Drain Trough (23-59-61)

All Packages Include Attaching Parts

REF. NO.	QTY	PART NUMBER	DESCRIPTION
14	1	2421 921-2	MOULDING PACKAGE, Quarter Panel Belt, Front (23-23-39)
	10	6001 247	Clip
	1	2421 919-20	MOULDING PACKAGE, Quarter Panel Belt, Rear (23-23-39)
	2	6001 247	Clip
15	1	2196 810-1	MOULDING PACKAGE, Rear Window Outside Finish Side (23-23-52)
	2	6000 688	Clip
16	1	2196 808-9	MOULDING PACKAGE, Rear Window Outside Finish Upper (23-23-52)
	12	6000 692	Clip
17	1	2093 479	CAP, Rear Window Outside Moulding Upper Center (23-23-41)
18	1	2196 812	MOULDING PACKAGE, Rear Window Outside Finish Lower (23-23-52)
	6	6000 688	Clip
19	1	2423 194	MEDALLION, Deck Lid (23-19-114)
	1	---- ---	Washer 1 6006 215 Nut
	1	6000 960	Clip
20	1	2421 589	MOULDING PACKAGE, Deck Lid (23-23-30)
	3	6001 103	Retainer 1 441 256 Nut
	3	6022 007	Washer 2 151 497 Nut
21	2	2417 189	"D", Deck Lid Letter (23-19-114)
	1	2417 190	"O"
	1	2417 192	"G"
	1	2417 193	"E"
	5	152 259	Nut
22	1	2275 994	MOULDING PACKAGE, Deck Lower Panel License Depression (23-23-23)
	2	6022 052	Washer
	2	9411 618	Nut
	1	2240 987	MOULDING PACKAGE, Deck Lower Panel License Depression (use w/o Side Mouldings) (23-23-23)
	4	6000 970	Clip
	4	---- ---	Nut

REF. NO.	QTY	PART NUMBER	DESCRIPTION
23	1	2275 909-10	MOULDING PACKAGE, Deck Lower Panel (use w/2275 994) (23-23-23)
	8	6006 165	Washer
	8	6022 052	Washer
	8	9411 618	Nut
24	1	2275 911-2	MOULDING PACKAGE, Quarter Panel Bumper Depression (23-23-39)
	2	6006 165	Washer
	6	6022 052	Washer
	6	9411 618	Nut
25	2	2254 773	NAME PLATE, Dodge, Quarter Outside Panel (23-34-238)
	3	1839 995	Nut
26	1	2421 592-3	MOULDING PACKAGE, Quarter Panel Lower (23-23-39)
	18	6000 716	Retainer
	2	6010 189	Retainer
	2	6023 013	Washer
	2	---- ---	Nut
27	2	2421 588	MOULDING PACKAGE, Body Side Sill (23-23-2)
	8	6000 942	Clip
	8	9413 197	Screw
	4	9416 706	Screw
28	1	2421 596-7	MOULDING PACKAGE, Door Lower (23-23-32)
	12	6006 429	Clip

Part Type Code is Indicated in Parentheses **19x9419A**

MOULDINGS - DODGE 880 SD3(L) SPECIAL CLUB COUPE

MyMopar.com

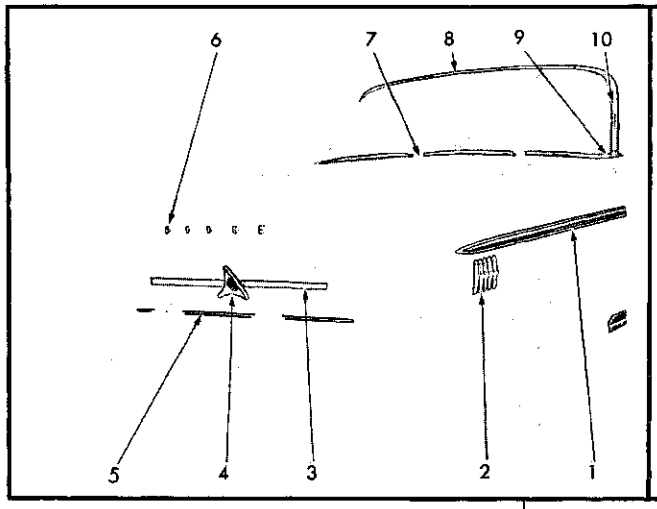

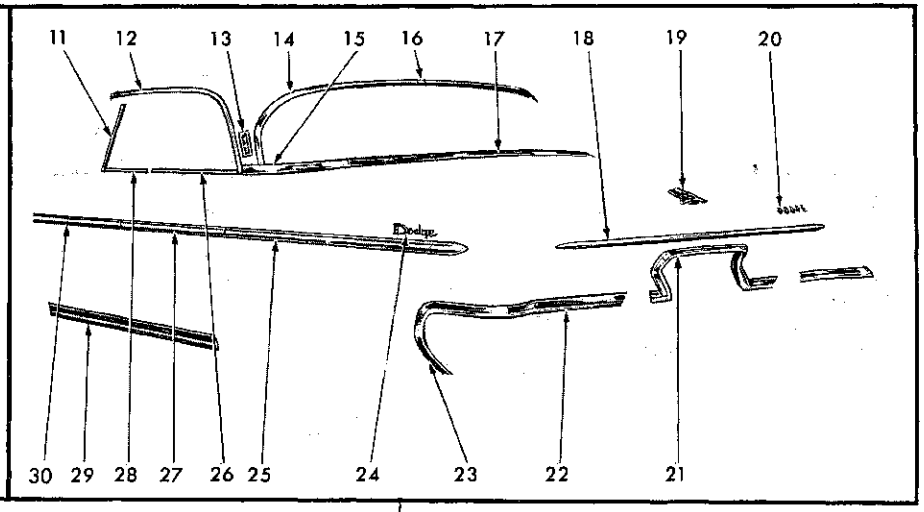

REF. NO.	QTY	PART NUMBER	DESCRIPTION
1	2	2421 652	MOULDING PACKAGE, Fender Side (12-15-2)
	6	6000 716	Clip
	6	6010 189	Clip
	2	6010 215	Clip
2	2	2240 824	LOUVERS, Fender Side (12-15-21)
	8	2189 165	Seal
3	2	2421 653	MOULDING PACKAGE, Radiator Grille Center (7-16-36)
	6	116 000	Nut
	6	6001 104	Clip
4	1	2266 831	ORNAMENT, Radiator Grille (7-17-1)
	3	274 752	Nut
5	1	2421 884	MOULDING PACKAGE, Radiator Grille Lower (7-16-36)
	6	6001 030	Retainer
	6	152 259	Nut
6	1	2417 189	LETTER, Hood Front Name, "D" Front (15-06-16)
	1	2417 190	"O"
	1	2417 191	"D", Center
	1	2417 192	"G"
	1	2417 193	"E"
	10	6023 260	Nut
7	1	2084 997	MOULDING PACKAGE, Windshield Outside Finish Lower Center (23-23-65)
	5	6000 685	Clip
8	1	2240 768	MOULDING PACKAGE, Windshield Outside Finish Upper (23-23-65)
	5	6000 927	Clip
9	1	2196 272-3	MOULDING PACKAGE, Windshield Outside Finish Lower End (23-23-65)
	2	6006 685	Clip
10	1	2240 769-70	MOULDING PACKAGE, Windshield Outside Finish Side (23-23-65)
	8	6022 010	Screw
11	2	2254 627	MOULDING and CHANNEL, Door Vent Wing Division (23-64-48)
12	1	1909 636-7	MOULDING, Roof Side Drain Trough (23-59-61)
13	1	2254 720-1	MEDALLION, Roof Panel Side (23-34-334)
	4	152 259	Nut and Seal

REF. NO.	QTY	PART NUMBER	DESCRIPTION
14	1	2196 282-3	MOULDING PACKAGE, Rear Window Outside Finish Upper and Side (23-23-52)
	10	6000 692	Clip
15	1	2275 025-6	MOULDING PACKAGE, Rear Window Outside Finish Lower End (23-23-52)
	2	6000 688	Clip
	2	6000 733	Clip
16	1	2093 479	CAP, Rear Window Outside Moulding Upper Center (23-23-41)
17	1	2196 292	MOULDING PACKAGE, Rear Window Outside Finish Lower Center (23-23-52)
	7	6000 689	Clip
18	1	2421 589	MOULDING PACKAGE, Deck Lid (23-23-30)
	3	6001 103	Retainer
	3	6022 007	Washer
	1	441 256	Nut
	2	151 497	Nut
19	1	2423 194	MEDALLION, Deck Lid (23-19-114)
	1	6006 215	Nut
	1	6000 960	Clip
20	2	2417 189	"D", Deck Lid Letter (23-19-114)
	1	2417 190	"O"
	1	2417 192	"G"
	1	2417 193	"E"
	5	152 259	Nut
21	1	2240 987	MOULDING PACKAGE, Deck Lower Panel License Depression (use w/o Side Mouldings) (23-23-23)
	4	6000 970	Clip
	4	---- ---	Nut
	1	2275 994	MOULDING PACKAGE, Deck Lower Panel License Depression (23-23-23)
	2	6022 052	Washer
	2	9411 618	Nut
22	1	2275 909-10	MOULDING PACKAGE, Deck Lower Panel (23-23-23)
	8	6006 165	Washer
	8	6022 052	Washer
	8	9411 618	Nut

REF. NO.	QTY	PART NUMBER	DESCRIPTION
23	1	2275 911-2	MOULDING PACKAGE, Quarter Panel Bumper Depression (23-23-39)
	2	6006 165	Washer
	6	6022 052	Washer
	6	9411 618	Nut
24	2	2254 773	NAME PLATE, Dodge Quarter Outside Panel (23-34-238)
	6	6023 260	Nut
25	1	2421 594-5	MOULDING PACKAGE, Quarter Panel (23-23-39)
	12	6000 716	Retainer
	2	6010 189	Retainer
	2	6023 013	Washer
	2	---- ---	Nut
26	1	2298 616-7	MOULDING PACKAGE, Rear Door Belt (23-23-33)
	10	6001 247	Clip
27	1	2421 590-1	MOULDING PACKAGE, Rear Door Lower (23-23-33)
	8	6006 429	Retainer
	2	6010 189	Retainer
	2	---- ---	Nut
28	1	2298 610-1	MOULDING PACKAGE, Front Door Belt (23-23-32)
	8	6001 247	Clip
29	2	2421 588	MOULDING PACKAGE, Body Side Sill (23-23-2)
	8	6000 942	Clip
	8	9413 197	Screw
	4	9416 706	Screw
30	1	2421 598-9	MOULDING PACKAGE, Front Door Lower (23-23-32)
	10	6006 429	Clip

All Packages Include Attaching Parts

Part Type Code is Indicated in Parentheses

19x9420

MOULDINGS - DODGE 880 SD3(L) SPECIAL 4 DOOR SEDAN

MyMopar.com

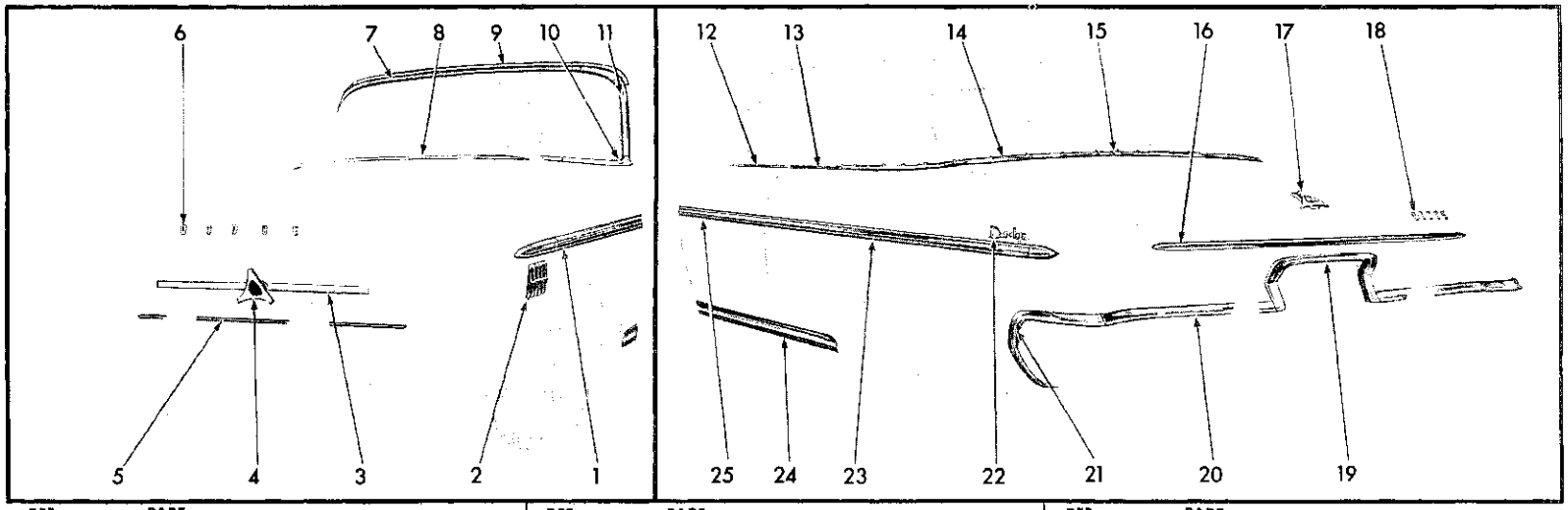

REF. NO.	QTY	PART NUMBER	DESCRIPTION
1	2	2421 652	MOULDING PACKAGE, Fender Side (12-15-2)
	6	6000 716	Clip
	6	6010 189	Clip
	2	6010 215	Clip
	2	6006 412	Clip
	8	---- ---	Nut
2	2	2240 824	LOUVERS, Fender Side (12-15-21)
	8	2189 165	Seal
	8	6000 616	Nut
3	2	2421 653	MOULDING PACKAGE, Radiator Grille Center (7-16-36)
	6	6001 104	Clip
	6	2417 194	Spacer
	6	116 000	Nut
4	1	2266 831	ORNAMENT, Radiator Grille (7-17-1)
	3	274 752	Nut
5	1	2421 884	MOULDING PACKAGE, Radiator Grille Lower (7-16-36)
	6	6001 030	Retainer
	6	152 259	Nut
6	1	2417 189	LETTER, Hood Front, Front "D" (15-06-16)
	1	2417 190	"O"
	1	2417 191	"D", Center
	1	2417 192	"G"
	1	2417 193	"E"
	10	6023 260	Nut
7	1	2196 119	PANEL PACKAGE, Windshield Header Outside Finish (23-23-64)
	5	274 109	Screw
8	1	2084 997	MOULDING PACKAGE, Windshield Outside Finish Lower (23-23-65)
	5	6000 685	Clip
9	1	1954 020	PANEL, Folding Top Header Outside Finish (23-58-240)
10	1	2196 272-3	MOULDING PACKAGE, Windshield Outside Finish Lower End (23-23-65)
	2	6000 685	Clip
11	1	2084 998-9	MOULDING PACKAGE, Windshield Outside Finish Side, w/Extensions (23-23-65)
	2	274 109	Screw
12	1	2298 612-3	MOULDING PACKAGE, Door Belt (23-23-32)
	10	6001 247	Clip
13	1	2298 590-1	MOULDING PACKAGE, Quarter Panel Belt (23-23-39)
	6	6001 247	Clip
14	1	2165 704-5	MOULDING, Folding Top Belt Outside Finish (23-23-49)
15	1	1963 336	COVER, Folding Top Belt Bar Outside Finish Moulding (23-23-41)
16	1	2421 589	MOULDING PACKAGE, Deck Lid (23-23-30)
	3	6001 103	Retainer
	3	6022 007	Washer
	1	441 256	Nut
	2	151 497	Nut
17	1	2423 194	MEDALLION, Deck Lid (23-19-114)
	1	6006 215	Nut
	1	6000 960	Clip
18	2	2417 189	"D", Deck Lid Letter (23-19-114)
	1	2417 190	"O"
	1	2417 192	"G"
	1	2417 193	"E"
	5	152 259	Nut
19	1	2240 987	MOULDING PACKAGE, Deck Lower Panel License Depression (use w/o Side Mouldings) (23-23-23)
	4	6000 970	Clip
	4	---- ---	Nut
	1	2275 994	MOULDING PACKAGE, Deck Lower Panel License Depression (23-23-23)
	2	6022 052	Washer
	2	9411 618	Nut
20	1	2275 909-10	MOULDING PACKAGE, Deck Lower Panel (23-23-23)
	8	6006 165	Washer
	8	6022 052	Washer
	8	9411 618	Nut
21	1	2275 911-2	MOULDING PACKAGE, Quarter Panel Bumper Depression (23-23-39)
	2	6006 165	Washer
	6	6022 052	Washer
	6	9411 618	Nut
22	2	2254 773	NAME PLATE, Dodge Quarter Outside Panel (23-34-238)
	6	6023 260	Nut
23	1	2421 592-3	MOULDING PACKAGE, Quarter Panel Lower (23-23-39)
	18	6000 716	Retainer
	2	6010 189	Retainer
	2	6022 013	Washer
	2	---- ---	Nut
24	2	2421 588	MOULDING PACKAGE, Body Side Sill (23-23-2)
	8	6000 942	Clip
	8	9413 197	Screw
	4	9416 706	Screw
25	1	2421 596-7	MOULDING PACKAGE, Door Lower (23-23-32)
	12	6006 429	Clip

Part Type Code is Indicated in Parentheses

All Packages Include Attaching Parts

19x9422

MOULDINGS - DODGE 880 SD3(L) CONVERTIBLE COUPE

MyMopar.com

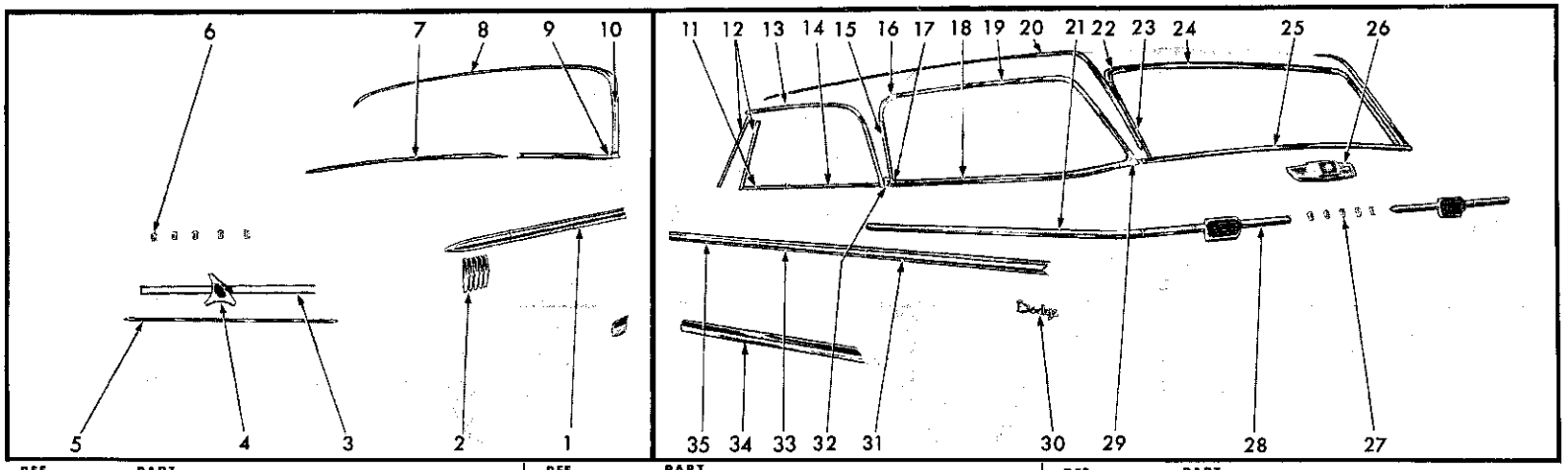

REF. NO.	QTY	PART NUMBER	DESCRIPTION
1	2	2421 652	MOULDING PACKAGE, Fender Side (12-15-2)
	6	6000 716	Clip
	6	6010 189	Clip 2 6006 412 Clip
	2	6010 215	Clip 8 ---- --- Nut
2	2	2240 824	LOUVERS, Fender Side (12-15-21)
	8	2189 165	Seal 8 6000 616 Nut
3	2	2421 653	MOULDING PACKAGE, Radiator Grille Center (7-16-36)
	6	116 000	Nut
	6	6001 104	Clip 6 2417 194 Spacer
4	1	2266 831	ORNAMENT, Radiator Grille (7-17-1)
	3	274 752	Nut
5	1	2421 884	MOULDING PACKAGE, Radiator Grille Lower (7-16-36)
	6	6001 030	Retainer
	6	152 259	Nut
6	1	2417 189	LETTER, Hood Front Name, "D", Front (15-06-16)
	1	2417 190	"O"
	1	2417 191	"D", Center
	1	2417 192	"G"
	1	2417 193	"E"
	10	6023 260	Nut
7	1	2084 997	MOULDING PACKAGE, Windshield Outside Finish Lower Center (23-23-65)
	5	6000 685	Clip
8	1	2240 768	MOULDING PACKAGE, Windshield Outside Finish Upper (23-23-65)
	5	6000 927	Clip
9	1	2196 272-3	MOULDING PACKAGE, Windshield Outside Finish Lower End (23-23-65)
	2	6000 685	Clip
10	1	2240 769-70	MOULDING PACKAGE, Windshield Outside Finish Side (23-23-65)
	8	6022 010	Screw
11	1	2298 610-1	MOULDING PACKAGE, Front Door Belt (23-23-32)
	8	6001 247	Clip
12	1	2254 484-5	FRAME and CHANNEL, Front Door Vent Wing Division (23-64-48)

All Packages Include Attaching Parts

REF. NO.	QTY	PART NUMBER	DESCRIPTION
13	1	1909 636-7	MOULDING, Roof Side Drain Trough (23-59-61)
14	1	2298 616-7	MOULDING PACKAGE, Rear Door Belt (23-23-33)
	10	6001 247	Clip
15	1	2094 018-9	MOULDING, Quarter Window Outside Finish Front (23-23-73)
16	1	2094 016-7	CAP, Quarter Window Outside Finish Upper, w/Retainer (23-23-74)
17	2	1961 210	CAP, Quarter Window Outside Finish Lower (23-23-74)
18	1	1961 214-5	MOULDING, Quarter Window Outside Finish Lower (23-23-73)
19	1	1961 212-3	MOULDING, Quarter Window Outside Finish Upper (23-23-73)
20	1	2196 253	MOULDING PACKAGE, Roof Panel Outside Finish (23-23-42)
	28	6006 301	Clip
	1	2196 252	MOULDING PACKAGE, Roof Panel Outside Finish, Used With Assist Handle (23-23-42)
	20	6006 301	Clip
21	2	2275 993	MOULDING PACKAGE, Quarter Panel Upper (23-23-39)
	4	6000 820	Clip
	16	6000 822	Clip
22	1	2196 464-5	CAP PACKAGE, Roof Rear Tailgate Opening Moulding (23-23-60)
	2	6006 451	Clip
23	1	2196 462-3	MOULDING PACKAGE, Rear Pillar Outside Finish (23-23-60)
	*	6006 451	Clip
24	1	2196 466	MOULDING PACKAGE, Tailgate Opening Outside Finish Roof Rear (23-23-60)
	7	6006 451	Clip
25	1	2196 460	MOULDING PACKAGE, Tailgate Outside Finish Belt (23-23-61)
	2	6006 441	Clip
	2	151 306	Screw
26	1	2188 389	ORNAMENT, Tailgate Outside Panel w/Electric Window Lift (23-54-11)
	3	151 497	Nut and Washer

REF. NO.	QTY	PART NUMBER	DESCRIPTION
27	2	2417 189	"D", Tailgate Name LETTER (23-54-11)
	1	2417 190	"O"
	1	2417 192	"G"
	1	2417 193	"E"
	5	152 259	Nut
28	1	2275 031-2	MOULDING PACKAGE, Tailgate Outside Panel Bumper (23-23-61)
	4	151 497	Nut
29	1	2196 816-7	CAP PACKAGE, Quarter Window Outside Finish Lower Rear (23-23-74)
	2	125 978	Screw
30	2	2254 773	NAME PLATE, Dodge, Quarter Outside Panel (23-34-238)
	6	6001 254	Clip
31	1	2421 650-1	MOULDING PACKAGE, Quarter Panel Lower (23-23-39)
	14	6000 716	Retainer
32	1	2299 430-1	MOULDING PACKAGE, Quarter Panel Belt (23-23-39)
	2	9411 465	Screw
33	1	2421 590-1	MOULDING PACKAGE, Rear Door Lower (23-23-33)
	8	6006 429	Retainer
	2	6010 189	Retainer
	2	---- ---	Nut
34	2	2421 588	MOULDING PACKAGE, Body Side Sill (23-23-2)
	8	6000 942	Clip
	8	9413 197	Screw
	4	9416 706	Screw
35	1	2421 598-9	MOULDING PACKAGE, Front Door Lower (23-23-32)
	10	6006 429	Clip

Part Type Code is Indicated in Parentheses **19x9421**

MOULDINGS - DODGE 880 SD3(L) 4 DOOR SUBURBAN

MyMopar.com

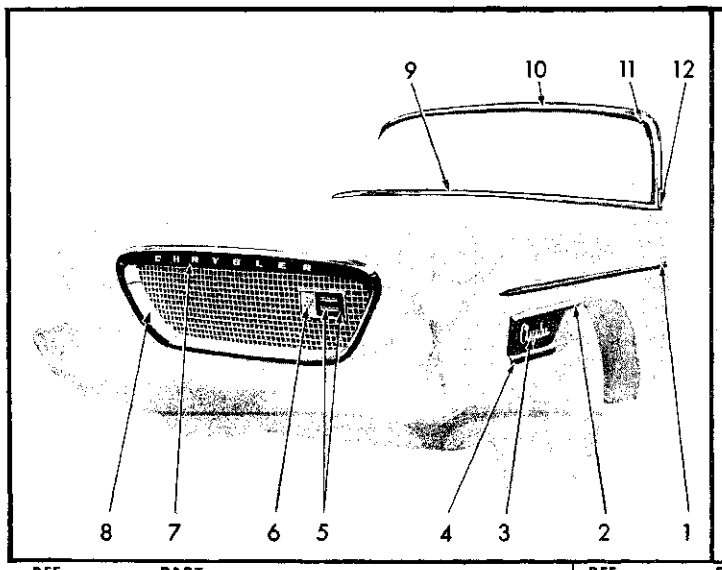

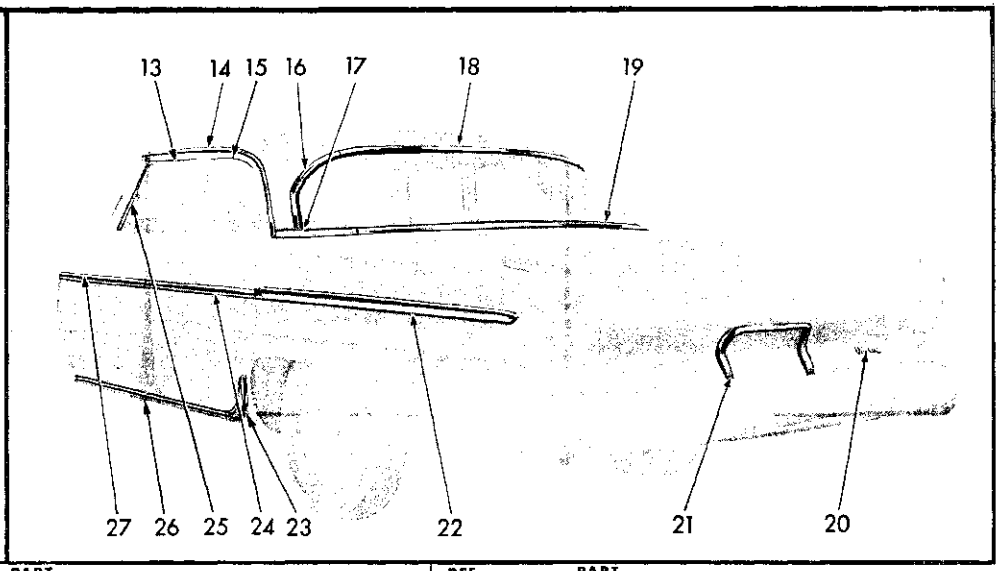

REF. NO.	QTY	PART NUMBER	DESCRIPTION
1	1	2298 575-6	MOULDING, Front Fender Side (12-15-2)
2	1	2275 968-9	MOULDING, Parking Light Extension, Upper (12-15-2)
	6	9411 618	Nut
3	1	2099 870-1	NAME PLATE, w/Finish Plate (use with "L" shaped mldg.) (12-15-21)
	4	---- ---	Screw
	1	2276 876-7	NAME PLATE, w/Finish Plate (use with straight mldg.) (12-15-21)
	4	---- ---	Screw
4	1	2421 575-6	MOULDING, Parking Light Extension Lower ("L" shaped mldg.) (12-15-2)
	6	9411 618	Nut
	1	2275 988-9	MOULDING, Parking Light Extension Lower (straight mldg.) (12-15-2)
	6	9411 618	Nut
5	1	2099 708	BASE, Medallion (7-17-2)
6	1	2099 712	MEDALLION, Radiator Grille (7-17-1)
7	1	2099 658	FRAME, Grille (7-16-36)
8	1	2099 713	EXTENSION, Frame, Center (7-16-36)
	1	2099 714-5	EXTENSION, Frame, Outer (7-16-36)
9	1	2084 997	MOULDING PACKAGE, Windshield Outside Finish Lower Center (23-23-65)
	5	6000 685	Clip
10	1	2240 768	MOULDING PACKAGE, Windshield Outside Finish Upper (23-23-65)
	5	6000 927	Clip
11	1	2240 769-70	MOULDING PACKAGE, Windshield Outside Finish Side (23-23-65)
	8	6022 010	Screw
12	1	2196 272-3	MOULDING PACKAGE, Windshield Outside Finish Lower End (23-23-65)
	2	6006 685	Clip
13	1	2240 866-7	MOULDING PACKAGE, Front Door Window Frame Upper (23-23-32)
	6	6022 059	Screw
14	1	2093 648-9	MOULDING, Roof Side Drain Trough (23-59-61)
15	1	2240 868-9	MOULDING PACKAGE, Rear Door Window Frame (23-23-33)
	6	6022 059	Screw
16	1	2196 282-3	MOULDING PACKAGE, Rear Window Outside Finish Upper and Side (23-23-52)
	10	6000 692	Clip
17	1	2275 025-6	MOULDING PACKAGE, Rear Window Outside Finish Lower End (23-23-52)
	2	6000 688	Clip
	2	6000 733	Clip
18	1	2093 479	CAP, Rear Window Outside Moulding Upper Center (23-23-41)
19	1	2196 292	MOULDING PACKAGE, Rear Window Outside Finish Lower Center (23-23-52)
	7	6000 689	Clip
20	1	2196 557	NAME PLATE PACKAGE, Deck Opening Lower Panel (23-34-184)
	2	152 259	Nut
21	1	2240 987	MOULDING PACKAGE, Deck Lower Panel License Depression (23-23-23)
	4	6000 970	Clip
	4	---- ---	Nut
22	1	2275 917-8	MOULDING PACKAGE, Quarter Panel (23-23-39)
	8	6006 459	Retainer
	6	6006 491	Retainer
23	1	2196 528-9	DEFLECTOR PACKAGE, Quarter Panel Stone (23-34-240)
	6	125 978	Screw
24	1	2298 595-6	MOULDING PACKAGE, Rear Door (23-23-33)
	8	6001 245	Clip
	2	6013 066	Clip
	2	151 497	Nut
25	1	2240 873-4	MOULDING PACKAGE, Front Door Window Frame Front (23-23-32)
	6	6023 098	Screw
26	1	2196 730-1	MOULDING PACKAGE, Body Side Sill (23-23-2)
	10	6000 942	Clip
	2	6010 046	Clip
	2	151 497	Nut
	10	161 895	Screw
27	1	2275 981-2	MOULDING PACKAGE, Front Door (23-23-32)
	10	6006 262	Clip

All Packages Include Attaching Parts

Part Type Code is Indicated in Parentheses **19x9235C**

MOULDINGS - CHRYSLER NEWPORT SC1(L) 4 DOOR SEDAN

MyMopar.com

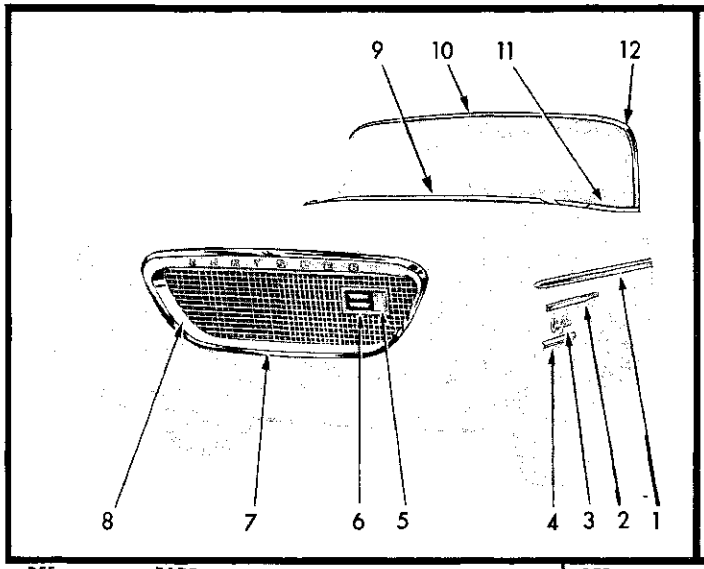

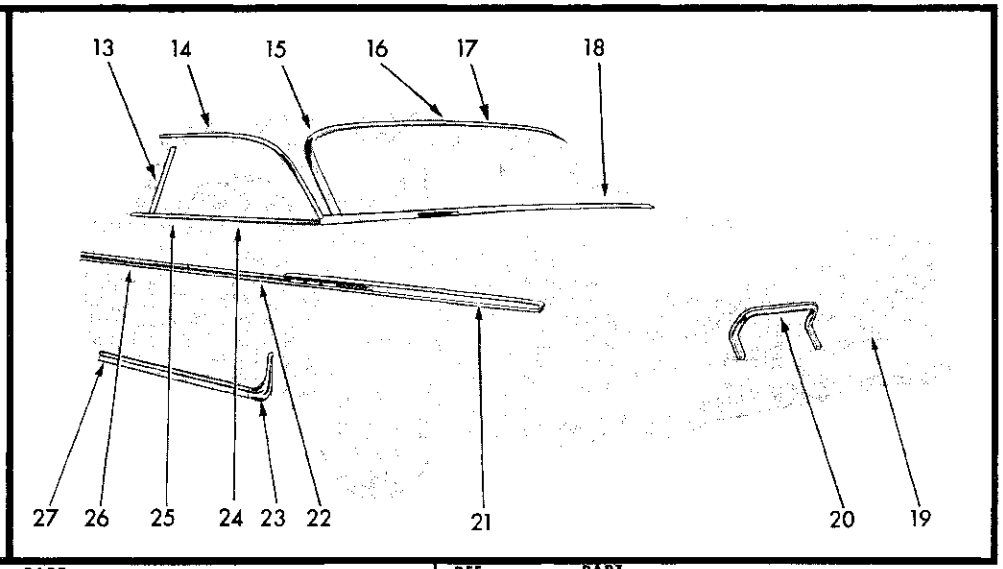

REF. NO.	QTY	PART NUMBER	DESCRIPTION
1	1	2298 575-6	MOULDING PACKAGE, Fender Side (12-15-2)
	12	6001 245	Clip
	2	6000 745	Clip
	2	446 059	Nut
2	1	2275 968-9	MOULDING PACKAGE, Parking Light Extension Upper (12-15-2)
	6	9411 618	Nut
3	1	2099 870-1	NAME PLATE, w/Finish Plate (use with "L" shaped mldg.) (12-15-21)
	4	---- ---	Screw
	1	2276 876-7	NAME PLATE, w/Finish Plate (use with straight mldg.) (12-15-21)
	4	---- ---	Screw
4	1	2421 575-6	MOULDING, Parking Light Extension Lower ("L" shaped mldg.) (12-15-2)
	6	9411 618	Nut
	1	2275 988-9	MOULDING, Parking Light Extension Lower (straight mldg.) (12-15-2)
	6	9411 618	Nut
5	1	2099 712	MEDALLION, Radiator Grille (7-17-1)
6	1	2099 708	BASE, Radiator Grille Medallion (7-17-2)
7	1	2099 658	FRAME, Radiator Grille (7-16-36)
8	1	2099 713	EXTENSION, Frame, Center (7-16-36)
	1	2099 714-5	EXTENSION, Frame, Outer (7-16-36)

All Packages Include Attaching Parts

REF. NO.	QTY	PART NUMBER	DESCRIPTION
9	1	2084 997	MOULDING PACKAGE, Windshield Outside Finish Lower Center (23-23-65)
	5	6000 685	Clip
10	1	2240 768	MOULDING PACKAGE, Windshield Outside Finish Upper (23-23-65)
	5	6000 927	Clip
11	1	2196 272-3	MOULDING PACKAGE, Windshield Outside Finish Lower End (23-23-65)
	2	6000 685	Clip
12	1	2240 769-70	MOULDING PACKAGE, Windshield Outside Finish Side (23-23-65)
	8	6022 010	Screw
13	2	2254 627	MOULDING and CHANNEL, Door Vent Wing Division (23-64-48)
14	1	2093 174-5	MOULDING, Roof Side Drain Trough (23-59-61)
15	1	2196 810-1	MOULDING PACKAGE, Rear Window Outside Finish Side (23-23-52)
	2	6000 688	Clip
16	1	2093 479	CAP, Rear Window Outside Moulding Upper Center (23-23-41)
17	1	2196 808-9	MOULDING PACKAGE, Rear Window Outside Finish Upper (23-23-52)
	12	6000 692	Clip
18	1	2196 812	MOULDING PACKAGE, Rear Window Outside Finish Lower (23-23-52)
	6	6000 688	Clip

REF. NO.	QTY	PART NUMBER	DESCRIPTION
19	1	2196 557	NAME PLATE PACKAGE, Deck Opening Lower Panel (23-34-184)
20	1	2240 987	MOULDING PACKAGE, Deck Lower Panel License Depression (23-23-23)
	4	6000 970	Clip
	4	---- ---	Nut
21	1	2275 915-6	MOULDING PACKAGE, Quarter Panel Lower Rear (23-23-39)
	8	6001 248	Retainer 8 152 255 Nut
	6	6001 249	Retainer
22	2	2299 395	MOULDING PACKAGE, Quarter Panel Lower Front (23-23-39)
	6	6001 245	Clip
23	1	2196 528-9	DEFLECTOR PACKAGE, Quarter Panel Stone (23-34-240)
	6	125 978	Screw
24	1	2298 588-9	MOULDING PACKAGE, Quarter Panel Belt (1 Piece Type) (23-23-39)
	10	6001 247	Clip
	1	2421 921-2	MOULDING PACKAGE, Quarter Panel Belt, Front (2 Piece Type) (23-23-39)
	10	6001 247	Clip
	1	2421 919-20	MOULDING PACKAGE, Quarter Panel Belt, Rear (2 Piece Type) (23-23-39)
	2	6001 247	Clip
25	1	2298 612-3	MOULDING PACKAGE, Door Belt (23-23-32)
	10	6001 247	Clip
26	1	2275 979-80	MOULDING PACKAGE, Door Lower (23-23-32)
	12	6006 262	Clip
27	1	2196 730-1	MOULDING PACKAGE, Body Side Sill (23-23-2)
	10	6000 942	Clip 2 151 497 Nut
	2	6010 046	Clip 10 161 895 Screw

Part Type Code is Indicated in Parentheses **19x9240C**

MOULDINGS - CHRYSLER NEWPORT SC1(L) SPECIAL CLUB COUPE

MyMopar.com

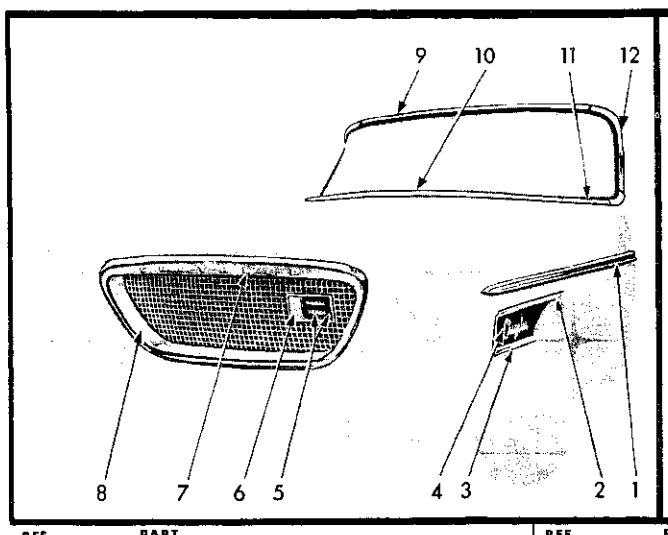

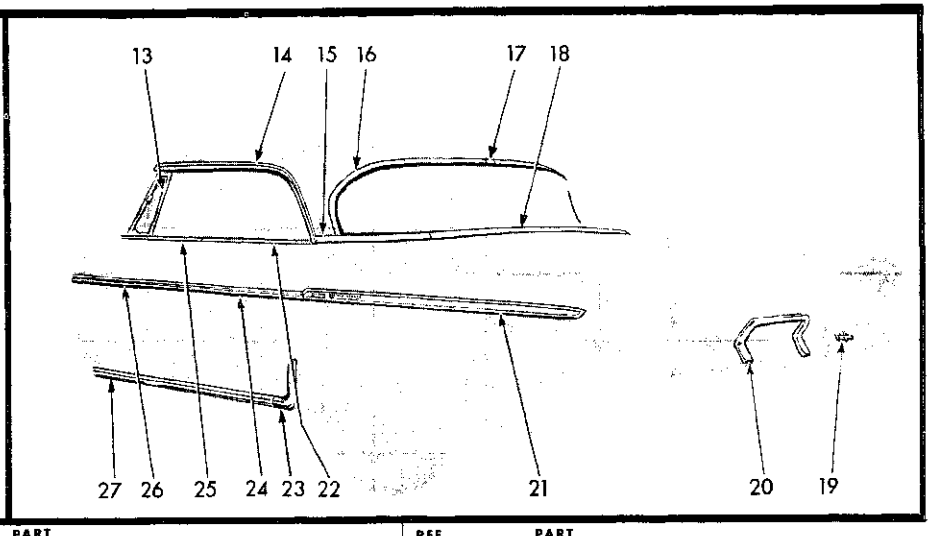

REF. NO.	QTY	PART NUMBER	DESCRIPTION
1	1	2298 575-6	MOULDING, Front Fender Side (12-15-2)
	12	6001 245	Clip
	2	6000 745	Clip
	2	446 059	Nut
2	1	2275 968-9	MOULDING, Parking Light Extension Upper (12-15-2)
	6	9411 618	Nut
3	1	2421 575-6	MOULDING, Parking Light Extension Lower ("L" shaped mldg.) (12-15-2)
	6	9411 618	Nut
	1	2275 988-9	MOULDING, Parking Light Extension Lower (straight mldg.) (12-15-2)
	6	9411 618	Nut
4	1	2099 870-1	NAME PLATE, w/Finish Plate (use with "L" shaped mldg.) (12-15-21)
	4	---- ---	Screw
	1	2276 876-7	NAME PLATE, w/Finish Plate (use with straight Mldg.) (12-15-21)
	4	---- ---	Screw
5	1	2099 712	MEDALLION, Grille (7-17-1)
6	1	2099 708	BASE, Medallion (7-17-2)
7	1	2099 658	FRAME, Radiator Grille (7-16-36)
8	1	2099 713	EXTENSION, Frame, Center (7-16-36)
	1	2099 714-5	EXTENSION, Frame, Outer (7-16-36)
9	1	2240 768	MOULDING PACKAGE, Windshield Outside Finish Upper (23-23-65)
	5	6000 927	Clip
10	1	2084 997	MOULDING PACKAGE, Windshield Outside Finish Lower Center (23-23-65)
	5	6000 685	Clip
11	1	2196 272-3	MOULDING PACKAGE, Windshield Outside Finish Lower End (23-23-65)
	2	6000 685	Clip
12	1	2240 769-70	MOULDING PACKAGE, Windshield Outside Finish Side (23-23-65)
	8	6022 010	Screw
13	2	2254 627	MOULDING and CHANNEL, Door Vent Wing Division (23-64-48)
14	1	2093 648-9	MOULDING, Roof Side Drain Trough (23-59-61)
15	1	2275 025-6	MOULDING PACKAGE, Rear Window Outside Finish Lower End, w/Low Window (23-23-52)
	2	6000 688	Clip
	2	6000 733	Clip
	1	2275 027-8	MOULDING PACKAGE, Rear Window Outside Finish Lower End, w/High Window (23-23-52)
	2	6000 688	Clip
	2	6000 733	Clip
16	1	2196 282-3	MOULDING PACKAGE, Rear Window Outside Finish Upper and Side, w/Low Window, (23-23-52)
	10	6000 692	Clip
	1	2196 288-9	MOULDING PACKAGE, Rear Window Outside Finish Upper and Side, w/High Window, (23-23-52)
	10	6000 692	Clip
17	1	2093 479	CAP, Rear Window Outside Moulding Upper Center (23-23-41)
18	1	2196 292	MOULDING PACKAGE, Rear Window Outside Finish Lower Center (23-23-52)
	7	6000 689	Clip
19	1	2196 557	NAME PLATE PACKAGE, Deck Opening Lower Panel (23-34-184)
	2	152 259	Nut
20	1	2240 987	MOULDING PACKAGE, Deck Lower Panel License Depression (23-23-23)
	4	6000 970	Clip
	4	---- ---	Nut
21	1	2275 917-8	MOULDING PACKAGE, Quarter Panel (23-23-39)
	8	6006 459	Retainer
	6	6006 491	Retainer
22	1	2298 616-7	MOULDING PACKAGE, Rear Door Belt (23-23-33)
	10	6001 247	Clip
23	1	2196 528-9	DEFLECTOR PACKAGE, Quarter Panel Stone (23-34-240)
	6	125 978	Screw
24	1	2298 595-6	MOULDING PACKAGE, Rear Door Lower (23-23-33)
	8	6001 245	Clip
	2	6013 066	Clip
	2	151 497	Nut
25	1	2298 610-1	MOULDING PACKAGE, Front Door Belt (23-23-32)
	8	6001 247	Clip
26	1	2275 981-2	MOULDING PACKAGE, Front Door Lower (23-23-32)
	10	6006 262	Clip
27	1	2196 730-1	MOULDING PACKAGE, Body Side Sill (23-23-2)
	10	6000 942	Clip
	2	6010 046	Clip
	2	151 497	Nut
	10	161 895	Screw

All Packages Include Attaching Parts

Part Type Code is Indicated in Parentheses

19x9236C

MOULDINGS - CHRYSLER NEWPORT SC1(L) SPECIAL 4 DOOR SEDAN

MyMopar.com

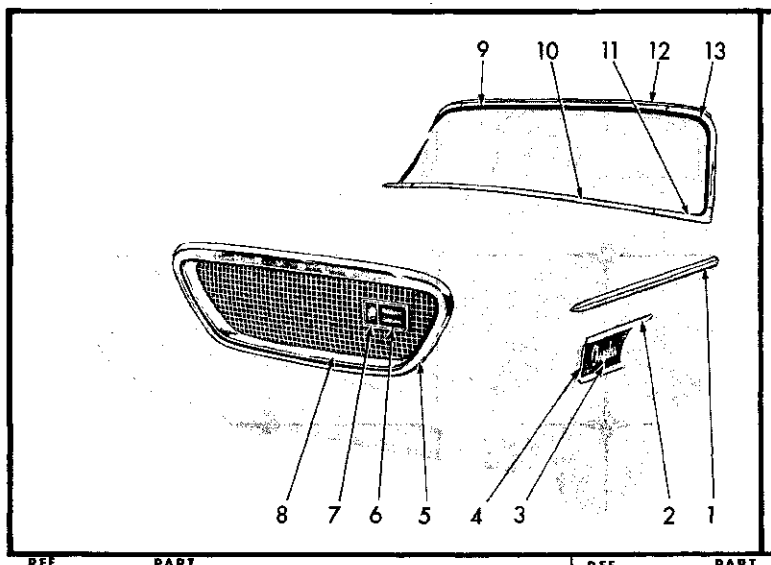

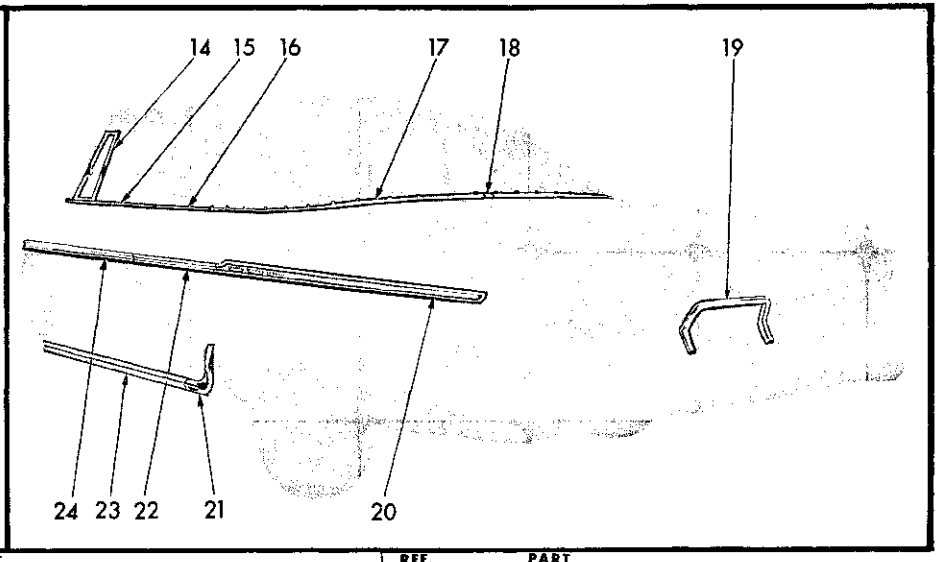

REF. NO.	QTY	PART NUMBER	DESCRIPTION
1	1	2298 575-6	MOULDING PACKAGE, Fender Side (12-15-2)
	12	6001 245	Clip
	2	6000 745	Clip
	2	446 059	Nut
2	1	2275 968-9	MOULDING PACKAGE, Parking Light Extension Upper (12-15-2)
	6	9411 618	Nut
3	1	2099 870-1	NAME PLATE, w/Finish Plate (use with "L" shaped mldg.) (12-15-21)
	4	---- ---	Screw
	1	2276 876-7	NAME PLATE, w/Finish Plate (use with straight mldg.) (12-15-21)
	4	---- ---	Screw
4	1	2421 575-6	MOULDING, Parking Light Extension Lower ("L" shaped mldg.) (12-15-2)
	6	9411 618	Nut
	1	2275 988-9	MOULDING, Parking Light Extension Lower (straight mldg.) (12-15-2)
	6	9411 618	Nut
5	1	2099 658	FRAME, Radiator Grille (7-16-36)
6	1	2099 708	BASE, Radiator Grille Medallion (7-17-2)
7	1	2099 712	MEDALLION, Radiator Grille (7-17-1)
8	1	2099 713	EXTENSION, Radiator Grille Frame Center (7-16-36)
	1	2099 714	EXTENSION, Radiator Grille Frame Right (7-16-36)
	1	2099 715	EXTENSION, Radiator Grille Frame Left (7-16-36)

REF. NO.	QTY	PART NUMBER	DESCRIPTION
9	1	2196 119	PANEL PACKAGE, Windshield Header Outside Finish (23-23-64)
	5	274 109	Screw
10	1	2084 997	MOULDING PACKAGE, Windshield Outside Finish Lower (23-23-65)
	5	6000 685	Clip
11	1	2196 272-3	MOULDING PACKAGE, Windshield Outside Finish Lower End (23-23-65)
	2	6000 685	Clip
12	1	1954 020	PANEL, Folding Top Header Outside Finish (23-58-240)
	5	6000 680	Clip
	2	6000 681	Clip
13	1	2084 998-9	MOULDING PACKAGE, Windshield Outside Finish Side, w/Extensions (23-23-65)
	2	274 109	Screw
14	2	2254 627	MOULDING and CHANNEL, Door Vent Wing Division (23-64-48)
15	1	2298 612-3	MOULDING PACKAGE, Door Belt (23-23-32)
	10	6001 247	Clip

REF. NO.	QTY	PART NUMBER	DESCRIPTION
16	1	2298 590-1	MOULDING PACKAGE, Quarter Panel Belt (23-23-39)
	6	6001 247	Clip
17	1	1963 334-5	MOULDING, Folding Top Outside Finish (23-23-49)
18	1	1963 336	CAP, Folding Top Belt Bar Finish Moulding (23-23-41)
19	1	2240 987	MOULDING PACKAGE, Deck Lower Panel License Depression (23-23-23)
	4	6000 970	Clip 4 ---- --- Nut
20	1	2275 915-6	MOULDING PACKAGE, Quarter Panel Lower Rear (23-23-39)
	8	6001 248	Retainer 8 ---- --- Nut
	6	6001 249	Retainer
21	1	2196 528-9	DEFLECTOR PACKAGE, Quarter Panel Stone (23-34-240)
	6	125 978	Screw
22	2	2299 395	MOULDING PACKAGE, Quarter Panel Lower Front (23-23-39)
	6	6001 245	Clip
23	1	2196 730-1	MOULDING PACKAGE, Body Side Sill (23-23-2)
	10	6000 942	Clip
	2	6010 046	Clip
	2	151 497	Nut
	10	161 895	Screw
24	1	2275 979-80	MOULDING PACKAGE, Door Lower (23-23-32)
	12	6006 262	Clip

All Packages Include Attaching Parts

Part Type Code is Indicated in Parentheses **19x9256C**

MOULDINGS - CHRYSLER NEWPORT SC1(L) CONVERTIBLE COUPE

MyMopar.com

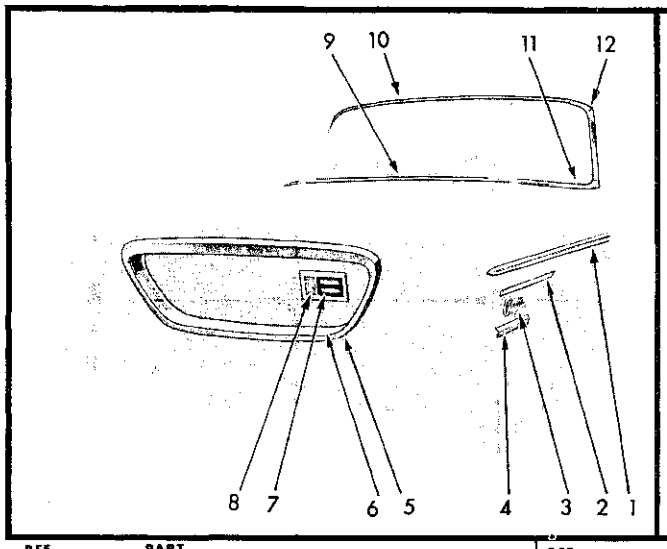

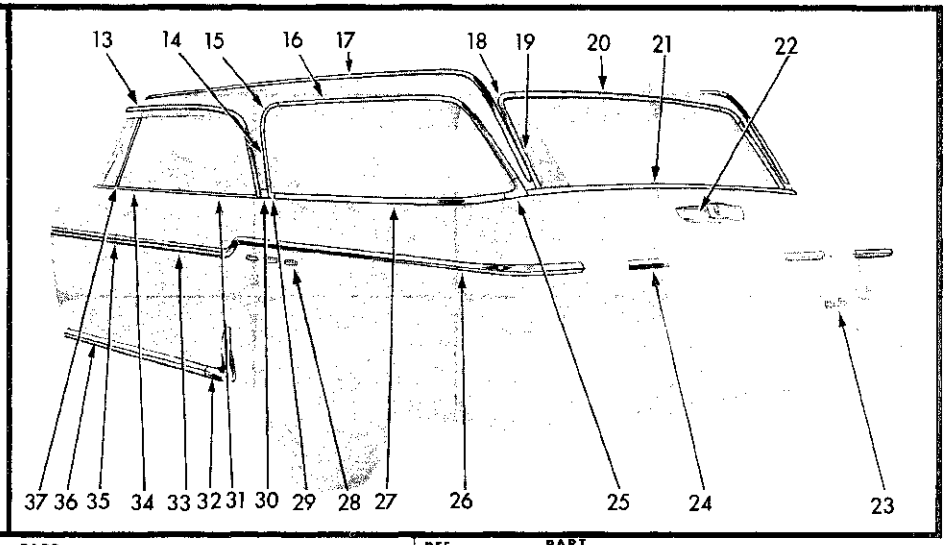

REF. NO.	QTY	PART NUMBER	DESCRIPTION
1	1	2298 575-6	MOULDING PACKAGE, Fender Side (12-15-2)
	12	6001 245	Clip
	2	6000 745	Clip 2 446 059 Nut
2	1	2275 968-9	MOULDING PACKAGE, Parking Light Extension Upper (12-15-2)
	6	9411 618	Nut
3	1	2099 870-1	NAME PLATE, w/Finish Plate (use with "L" shaped mldg.) (12-15-21)
	4	---- ---	Screw
	1	2276 876-7	NAME PLATE, w/Finish Plate (use with straight mldg.) (12-15-21)
	4	---- ---	Screw
4	1	2421 575-6	MOULDING, Parking Light Extension Lower ("L" shaped mldg.) (12-15-2)
	6	9411 618	Nut
	1	2275 988-9	MOULDING, Parking Light Extension Lower (straight mldg.) (12-15-2)
	6	9411 618	Nut
5	1	2099 658	FRAME, Radiator Grille (7-16-36)
6	1	2099 713	EXTENSION, Radiator Grille Frame Center (7-16-36)
	1	2099 714	EXTENSION, Radiator Grille Frame Right (7-16-36)
	1	2099 715	EXTENSION, Radiator Grille Frame Left (7-16-36)
7	1	2099 708	BASE, Radiator Grille Medallion (7-17-2)
8	1	2099 712	MEDALLION, Radiator Grille (7-17-1)
9	1	2084 997	MOULDING PACKAGE, Windshield Outside Finish Lower Center (23-23-65)
	5	6000 685	Clip
10	1	2240 768	MOULDING PACKAGE, Windshield Outside Finish Upper (23-23-65)
	5	6000 927	Clip
11	1	2196 272-3	MOULDING PACKAGE, Windshield Outside Finish Lower End (23-23-65)
	2	6000 685	Clip

All Packages Include Attaching Parts

REF. NO.	QTY	PART NUMBER	DESCRIPTION
12	1	2240 769-70	MOULDING PACKAGE, Windshield Outside Finish Side (23-23-65)
	8	6022 010	Screw
13	1	2093 648-9	MOULDING, Roof Side Drain Trough (23-59-61)
14	1	2094 018-9	MOULDING, Quarter Window Outside Finish Front (23-23-73)
15	1	2094 016-7	CAP, Quarter Window Outside Finish Upper, w/Retainer (23-23-74)
16	1	1961 212-3	MOULDING, Quarter Window Outside Finish Upper (23-23-73)
17	1	2196 253	MOULDING PACKAGE, Roof Panel Outside Finish (23-23-42)
	28	6006 301	Clip
18	1	2196 464-5	CAP PACKAGE, Roof Rear Tailgate Opening Moulding (23-23-60)
	2	6006 451	Clip
19	1	2196 462-3	MOULDING PACKAGE, Rear Pillar Outside Finish (23-23-60)
	*	6006 451	Clip
20	1	2196 466	MOULDING PACKAGE, Tailgate Opening Outside Finish Roof Rear (23-23-60)
	7	6006 451	Clip
21	1	2196 460	MOULDING PACKAGE, Tailgate Outside Finish Belt (23-23-61)
	2	6006 441	Clip
	2	151 306	Screw
22	1	2188 389	ORNAMENT, Tailgate Outside Panel Electric Window Lift (23-54-11)
	3	151 497	Nut and Washer
23	1	2189 898	NAME PLATE, Tailgate Outside Panel (23-54-11)
	2	445 160	Clip
24	1	2275 031-2	MOULDING PACKAGE, Tailgate Outside Panel Bumper (23-23-61)
	4	151 497	Nut
25	1	2196 816-7	CAP PACKAGE, Quarter Window Outside Finish Lower Rear (23-23-74)
	2	125 978	Screw

REF. NO.	QTY	PART NUMBER	DESCRIPTION
26	1	2275 065-6	MOULDING PACKAGE, Quarter Panel Lower (23-23-39)
	2	6000 820	Clip
	16	6001 207	Clip
27	1	1961 214-5	MOULDING, Quarter Window Outside Finish Lower (23-23-73)
28	6	2189 807	ORNAMENT, Quarter Outside Lower Panel Castle (23-34-334)
	12	6000 050	Clip
29	2	1961 210	CAP, Quarter Window Outside Finish Lower (23-23-74)
30	1	2299 430-1	MOULDING PACKAGE, Quarter Panel Belt (23-23-39)
	2	9411 465	Screw
31	1	2298 616-7	MOULDING PACKAGE, Rear Door Belt(23-23-33)
	10	6001 247	Clip
32	1	2196 184-5	DEFLECTOR PACKAGE, Quarter Panel Stone (23-34-240)
	6	125 978	Screw
33	1	2298 600-1	MOULDING PACKAGE, Rear Door Lower (23-23-33)
	8	6001 245	Clip 2 ---- --- Washer
	2	1598 664	Clip 2 9415 921 Screw
34	1	2298 610-1	MOULDING PACKAGE, Front Door Belt (23-23-32)
	8	6001 247	Clip
35	1	2275 981-2	MOULDING PACKAGE, Front Door Lower (23-23-32)
	10	6006 262	Clip
36	1	2299 414-5	MOULDING PACKAGE, Body Side Sill (23-23-2)
	2	6010 046	Clip
	2	151 497	Nut
	10	6000 942	Clip
	10	161 895	Screw
37	2	2254 627	MOULDING and CHANNEL, Front Door Vent Wing Division (23-64-48)

Part Type Code is Indicated in Parentheses **19x9250B**

MOULDINGS - CHRYSLER NEWPORT SC1(L) SUBURBAN

MyMopar.com

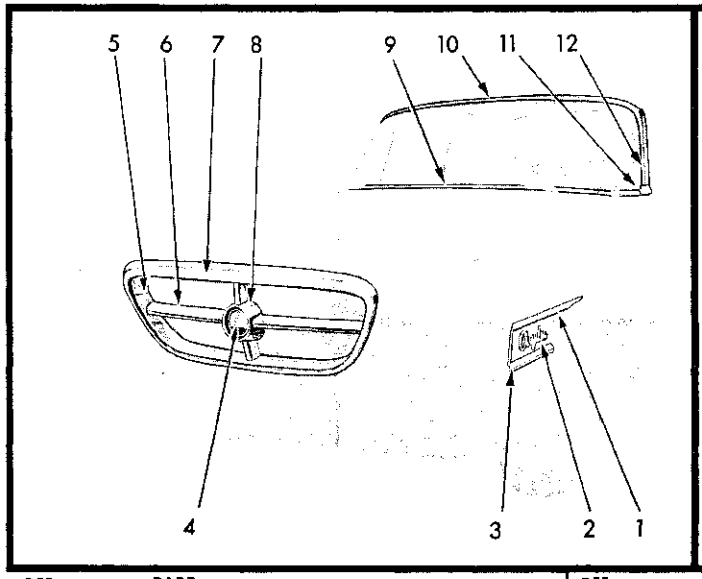

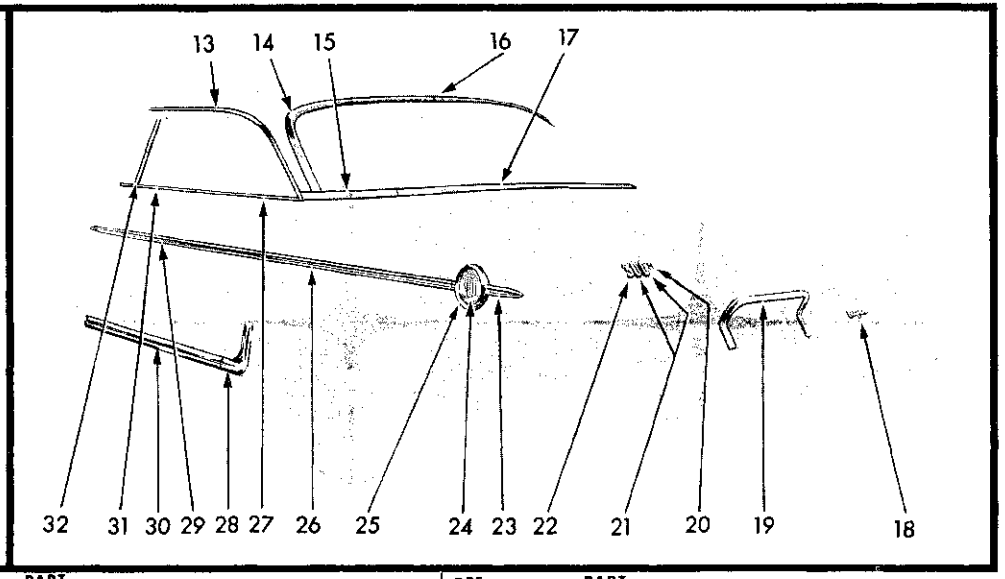

REF. NO.	QTY	PART NUMBER	DESCRIPTION
1	1	2275 968-9	MOULDING, Parking Light Extension Upper (12-15-2)
	6	9411 618	Nut
2	1	2099 870-1	NAME PLATE, w/Finish Plate (use with "L" shaped mldg.) (12-15-21)
	4	---- ---	Screw
	1	2276 876-7	NAME PLATE, w/Finish Plate (use with straight mldg.) (12-15-21)
	4	---- ---	Screw
3	1	2421 575-6	MOULDING, Parking Light Extension Lower ("L" shaped mldg.) (12-15-2)
	6	9411 618	Nut
	1	2275 988-9	MOULDING, Parking Light Extension Lower (straight mldg.) (12-15-2)
	6	9411 618	Nut
4	1	2099 661	MEDALLION, Radiator Grille (7-17-1)
5	1	2099 713	EXTENSION, Frame, Center (7-16-36)
	1	2099 714-5	EXTENSION, Frame, Outer (7-16-36)
6	1	2099 808-9	BAR, Horizontal (7-16-47)
7	1	2099 658	FRAME, Radiator Grille (7-16-36)
8	1	2099 824	BAR, Vertical, Center (7-16-47)
	1	2099 660	BAR, w/Medallion, Vertical, Center (7-16-47)
9	1	2084 997	MOULDING PACKAGE, Windshield Outside Finish Lower Center (23-23-65)
	5	6000 685	Clip
10	1	2240 768	MOULDING PACKAGE, Windshield Outside Finish Upper (23-23-65)
	5	6000 927	Clip
11	1	2196 272-3	MOULDING PACKAGE, Windshield Outside Finish Lower End (23-23-65)
	2	6000 685	Clip
12	1	2240 769-70	MOULDING PACKAGE, Windshield Outside Finish Side (23-23-65)
	8	6022 010	Screw
13	1	2093 174-5	MOULDING, Roof Side Drain Trough (23-59-61)
14	1	2196 808-9	MOULDING PACKAGE, Rear Window Outside Finish, Upper and Side (23-23-52)
	12	6000 692	Clip
15	1	2196 810-1	MOULDING PACKAGE, Rear Window Outside Finish Lower Side (23-23-52)
	2	6000 688	Clip
16	1	2093 479	CAP, Rear Window Outside Moulding Upper Center (23-23-41)
17	1	2196 812	MOULDING PACKAGE, Rear Window Outside Finish Lower Center (23-23-52)
	6	6000 688	Clip
18	1	2196 557	NAME PLATE PACKAGE, Deck Opening Lower Panel (23-34-184)
	2	152 259	Nut
19	1	2240 987	MOULDING PACKAGE, Deck Lower Panel License Depression (23-23-23)
	4	6000 970	Clip 4 ---- --- Nut
20	1	2189 960	LETTER "H", Deck Lid (23-19-114)
	1	152 259	Nut
21	2	2189 959	NUMERAL "O", Deck Lid (23-19-114)
	2	6000 050	Clip 2 152 259 Nut
22	1	2189 958	NUMERAL "3", Deck Lid (23-19-114)
	1	6000 050	Clip 1 152 259 Nut
23	2	2299 396	MOULDING PACKAGE, Quarter Panel Lower Rear (23-23-39)
	2	6013 066	Clip
	2	6010 029	Clip 4 151 947 Nut
24	2	2189 641	MEDALLION, Quarter Outside Panel (23-34-334)
	6	6006 425	Nut
25	2	2189 592	BASE, Quarter Outside Panel Medallion (23-34-340)
	4	152 260	Nut
26	2	2275 990	MOULDING PACKAGE, Quarter Panel Lower Front (23-23-39)
	18	6000 567	Clip
27	1	2298 588-9	MOULDING PACKAGE, Quarter Panel Belt (1 Piece Type) (23-23-39)
	10	6001 247	Clip
	1	2421 921-2	MOULDING PACKAGE, Quarter Panel Belt, Front (2 Piece Type) (23-23-39)
	10	6001 247	Clip
	1	2421 919-20	MOULDING PACKAGE, Quarter Panel Belt, Rear (2 Piece Type) (23-23-39)
	2	6001 247	Clip
28	1	2196 528-9	DEFLECTOR PACKAGE, Quarter Panel Stone (23-34-240)
	6	125 978	Screw
29	2	2298 594	MOULDING PACKAGE, Door Lower (23-23-32)
	8	6001 245	Clip 2 151 497 Nut
	2	6006 412	Clip
30	1	2196 730-1	MOULDING PACKAGE, Body Side Sill (23-23-2)
	10	6000 942	Clip 2 151 497 Nut
	2	6010 046	Clip 10 161 895 Screw
31	1	2298 612-3	MOULDING PACKAGE, Door Belt (23-23-32)
	10	6001 247	Clip
32	2	2254 627	MOULDING and CHANNEL, Door Vent Wing Division (23-64-48)

All Packages Include Attaching Parts

19x9241C

Part Type Code is Indicated in Parentheses

MOULDINGS - CHRYSLER 300 SC2(M) SPECIAL CLUB COUPE

MyMopar.com

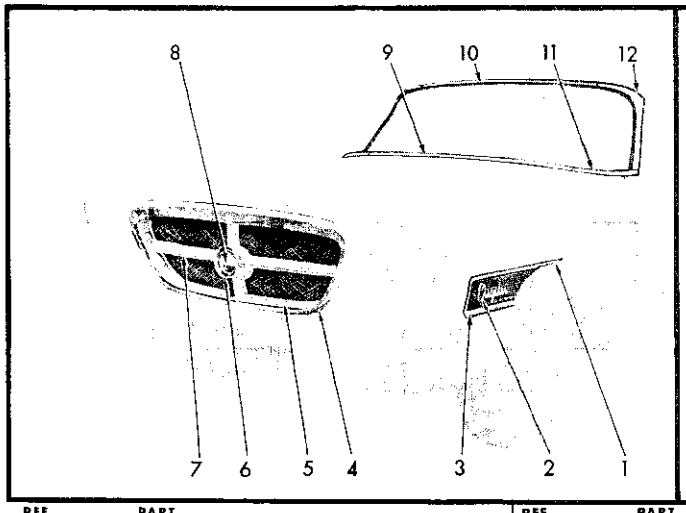

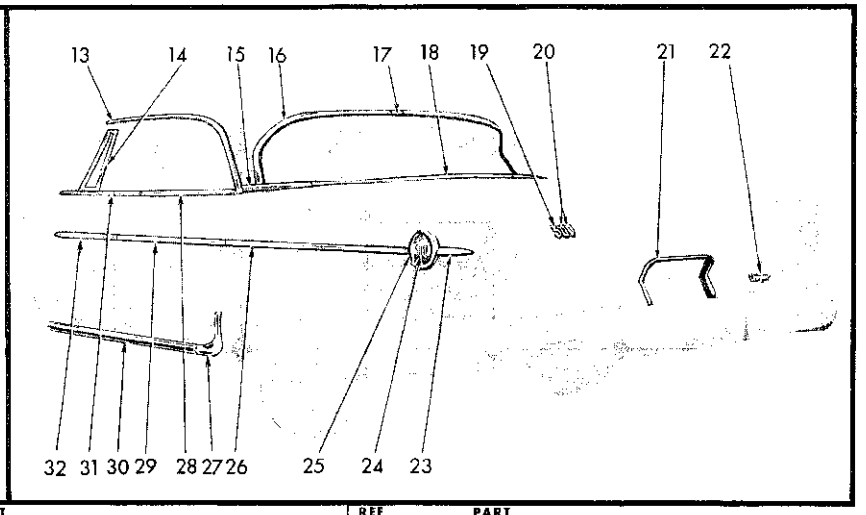

REF. NO.	QTY	PART NUMBER	DESCRIPTION
1	1	2275 968-9	MOULDING PACKAGE, Parking Light Extension Upper (12-15-2)
	6	9411 618	Nut
2	1	2099 870-1	NAME PLATE, w/Finish Plate (use with "L" shaped mldg.) (12-15-21)
	4	---- ---	Screw
	1	2276 876-7	NAME PLATE, w/Finish Plate (use with straight mldg.) (12-15-21)
	4	---- ---	Screw
3	1	2421 575-6	MOULDING, Parking Light Extension Lower ("L" shaped mldg.) (12-15-2)
	6	9411 618	Nut
	1	2275 988-9	MOULDING, Parking Light Extension Lower (straight mldg.) (12-15-2)
	6	9411 618	Nut
4	1	2099 658	FRAME, Radiator Grille (7-16-36)
5	1	2099 713	EXTENSION, Radiator Grille Frame Center (7-16-36)
	1	2099 714-5	EXTENSION, Radiator Grille Frame Right and Left (7-16-36)
6	1	2099 824	BAR, Radiator Grille Vertical (7-16-47)
	1	2099 660	BAR, Radiator Grille Vertical, w/Medallion (7-16-47)
7	1	2099 808-9	BAR, Radiator Grille Horizontal (7-16-47)
8	1	2099 661	MEDALLION, Radiator Grille (7-17-1)
9	1	2084 997	MOULDING PACKAGE, Windshield Outside Finish Lower Center (23-23-65)
	5	6000 685	Clip
10	1	2240 768	MOULDING PACKAGE, Windshield Outside Finish Upper (23-23-65)
	5	6000 927	Clip
11	1	2196 272-3	MOULDING PACKAGE, Windshield Outside Finish Lower End (23-23-65)
	2	6000 685	Clip
12	1	2240 769-70	MOULDING PACKAGE, Windshield Outside Finish Side (23-23-65)
	8	6022 010	Screw
13	1	2093 648-9	MOULDING, Roof Side Drain Trough (23-59-61)
14	2	2254 627	MOULDING and CHANNEL, Door Vent Wing Division (23-64-48)
15	1	2275 025-6	MOULDING PACKAGE, Rear Window Outside Finish Lower End, w/Low Window (23-23-52)
	2	6000 688	Clip
	2	6000 733	Clip
	1	2275 027-8	MOULDING PACKAGE, Rear Window Outside Finish Lower End, w/High Window (23-23-52)
	2	6000 688	Clip
	2	6000 733	Clip
16	1	2196 282-3	MOULDING PACKAGE, Rear Window Outside Finish Upper and Side, w/Low Window (23-23-52)
	10	6000 692	Clip
	1	2196 288-9	MOULDING PACKAGE, Rear Window Outside Finish Upper and Side, w/High Window (23-23-52)
	10	6000 692	Clip
17	1	2093 479	CAP, Rear Window Outside Mldg. Upper Center (23-23-41)
18	1	2196 292	MOULDING PACKAGE, Rear Window Outside Finish Lower Center (23-23-52)
	7	6000 689	Clip
19	1	2189 958	NUMERAL "3", Deck Lid (23-19-114)
	1	152 259	Nut
	1	6000 050	Clip
20	2	2189 959	NUMERAL "O", Deck Lid (23-19-114)
	2	152 259	Nut
	2	6000 050	Clip
21	1	2240 987	MOULDING PACKAGE, Deck Lower Panel License Depression (23-23-23)
	4	6000 970	Clip
	4	---- ---	Nut
22	1	2196 557	NAME PLATE PACKAGE, Deck Opening Lower Panel (23-34-184)
	2	152 259	Nut
23	2	2299 396	MOULDING PACKAGE, Quarter Panel Lower Rear (23-23-39)
	2	6013 066	Clip
	2	6010 029	Clip
	4	151 497	Nut
24	2	2189 641	MEDALLION, Quarter Outside Panel (23-34-334)
	6	6006 425	Nut
25	2	2189 592	BASE, Quarter Outside Panel Medallion (23-34-340)
	4	152 260	Nut
26	1	2275 991-2	MOULDING PACKAGE, Quarter Panel Lower Front (23-23-39)
	12	6000 567	Clip
27	1	2196 528-9	DEFLECTOR PACKAGE, Quarter Panel Stone (23-34-240)
	6	125 978	Screw
28	1	2298 616-7	MOULDING PACKAGE, Rear Door Belt (23-23-33)
	10	6001 247	Clip
29	1	2298 595-6	MOULDING PACKAGE, Rear Door Lower (23-23-33)
	8	6001 245	Clip
	2	6013 066	Clip
	2	151 497	Nut
30	1	2196 730-1	MOULDING PACKAGE, Body Side Sill (23-23-2)
	10	6000 942	Clip
	2	6010 046	Clip
	2	151 497	Nut
	10	161 895	Screw
31	1	2298 610-1	MOULDING PACKAGE, Front Door Belt (23-23-32)
	8	6001 247	Clip
32	1	2298 592-3	MOULDING PACKAGE, Front Door Lower (23-23-32)
	6	6001 245	Clip
	2	6006 412	Clip
	2	151 497	Nut

All Packages Include Attaching Parts

Part Type Code is Indicated in Parentheses

19x9257C

MOULDINGS - CHRYSLER 300 SC2(M) SPECIAL 4 DOOR SEDAN

MyMopar.com

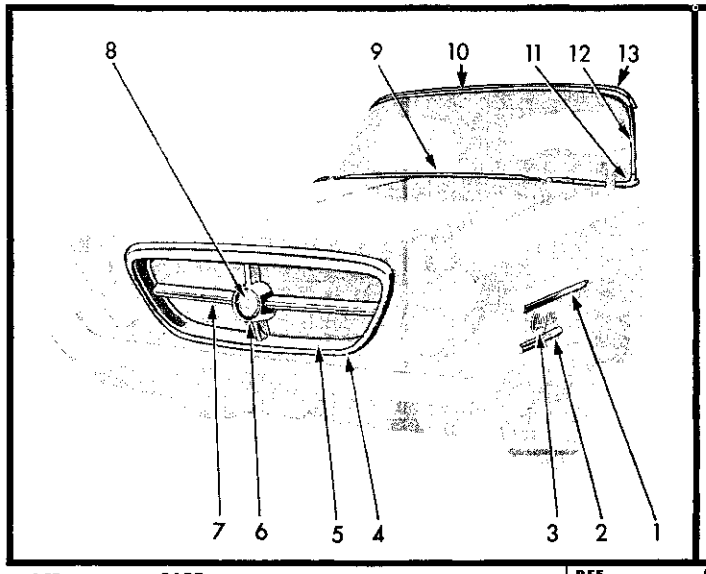

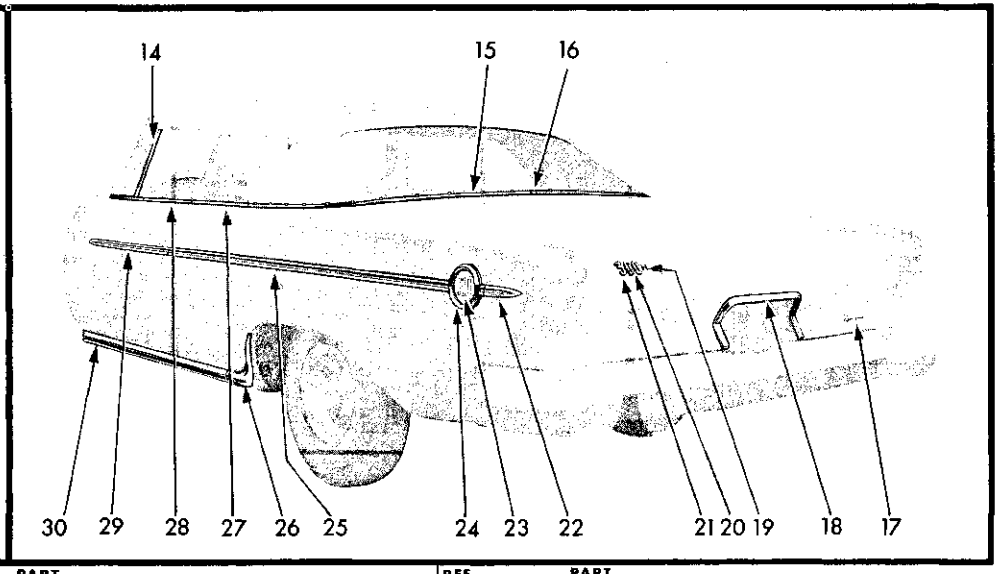

REF. NO.	QTY	PART NUMBER	DESCRIPTION
1	1	2275 968-9	MOULDING PACKAGE, Parking Light Extension Upper (12-15-2)
	6	9411 618	Nut
2	1	2421 575-6	MOULDING, Parking Light Extension Lower ("L" shaped mldg.) (12-15-2)
	6	9411 618	Nut
	1	2275 988-9	MOULDING, Parking Light Extension Lower (straight mldg.) (12-15-2)
	6	9411 618	Nut
3	1	2099 870-1	NAME PLATE, w/Finish Plate (use with "L" shaped mldg.) (12-15-21)
	4	---- ---	Screw
	1	2276 876-7	NAME PLATE, w/Finish Plate (use with straight mldg.) (12-15-21)
	4	---- ---	Screw
4	1	2099 658	FRAME, Radiator Grille (7-16-36)
5	1	2099 713	EXTENSION, Radiator Grille Frame Center (7-16-36)
	1	2099 714-5	EXTENSION, Radiator Grille Frame Right and Left (7-16-36)
6	1	2099 824	BAR, Radiator Grille Vertical (7-16-47)
	1	2099 660	BAR, Radiator Grille Vertical, w/Medallion (7-16-47)
7	1	2099 808-9	BAR, Radiator Grille Horizontal (7-16-47)
8	1	2099 661	MEDALLION, Radiator Grille (7-17-1)
9	1	2084 997	MOULDING PACKAGE, Windshield Outside Finish Lower Center (23-23-65)
	5	6000 685	Clip
10	1	2196 119	PANEL PACKAGE, Windshield Header Outside Finish (23-23-64)
	5	274 109	Screw

All Packages Include Attaching Parts

REF. NO.	QTY	PART NUMBER	DESCRIPTION
11	1	2196 272-3	MOULDING PACKAGE, Windshield Outside Finish Lower End (23-23-65)
	2	6000 685	Clip
12	1	2084 998-9	MOULDING PACKAGE, Windshield Outside Finish Side, w/Extensions (23-23-65)
	2	274 109	Screw
13	1	1954 020	PANEL, Folding Top Header Outside Finish (23-58-240)
	5	6000 680	Clip
	2	6000 681	Clip
14	2	2254 627	MOULDING and CHANNEL, Door Vent Wing Division (23-64-48)
15	1	1963 334-5	MOULDING, Folding Top Outside Finish (23-23-49)
16	1	1963 336	CAP, Folding Top Belt Bar Finish Moulding (23-23-41)
17	1	2196 557	NAME PLATE PACKAGE, Deck Opening Lower Panel (23-34-184)
	2	152 259	Nut
18	1	2240 987	MOULDING PACKAGE, Deck Lower Panel License Depression (23-23-23)
	4	6000 970	Clip
	4	---- ---	Nut
19	1	2189 960	LETTER "H", Deck Lid (23-19-114)
	1	152 259	Nut
20	2	2189 959	NUMERAL "O", Deck Lid (23-19-114)
	4	152 259	Nut
	4	6000 050	Clip
21	1	2189 958	NUMERAL "3", Deck Lid (23-19-114)
	1	152 259	Nut
	1	6000 050	Clip

REF. NO.	QTY	PART NUMBER	DESCRIPTION
22	2	2299 396	MOULDING PACKAGE, Quarter Panel Lower Rear (23-23-39)
	2	6013 066	Clip
	2	6010 029	Clip
	4	151 497	Nut
23	2	2189 641	MEDALLION, Quarter Outside Panel (23-34-334)
	6	6006 425	Nut
24	2	2189 592	BASE, Quarter Outside Panel Medallion (23-34-340)
	4	152 260	Nut
25	2	2275 990	MOULDING PACKAGE, Quarter Panel Lower Front (23-23-39)
	18	6000 567	Clip
26	1	2196 528-9	DEFLECTOR PACKAGE, Quarter Panel Stone (23-34-240)
	6	125 978	Screw
27	1	2298 590-1	MOULDING PACKAGE, Quarter Panel Belt (23-23-39)
	6	6001 247	Clip
28	1	2298 612-3	MOULDING PACKAGE, Door Belt (23-23-32)
	10	6001 247	Clip
29	2	2298 594	MOULDING PACKAGE, Door Lower (23-23-32)
	8	6001 245	Clip
	2	6006 412	Clip
	2	151 497	Nut
30	1	2196 730-1	MOULDING PACKAGE, Body Side Sill (23-23-2)
	10	6000 942	Clip
	2	6010 046	Clip
	2	151 497	Nut
	10	161 895	Screw

Part Type Code is Indicated in Parentheses

19x9249C

MOULDINGS - CHRYSLER 300 SC2(M) CONVERTIBLE COUPE

MyMopar.com

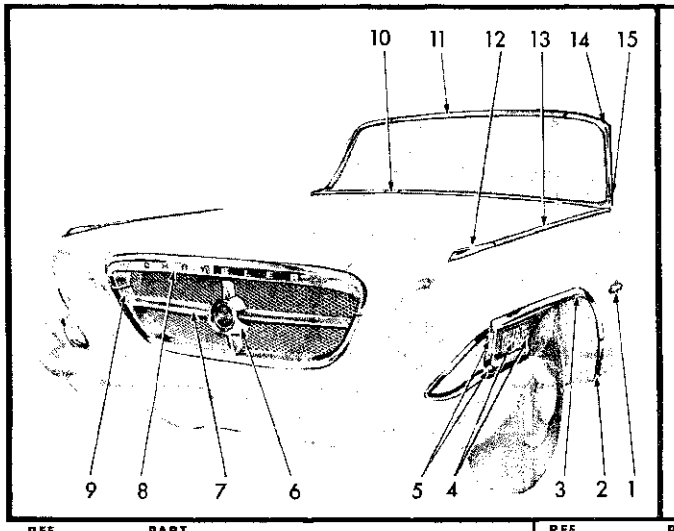

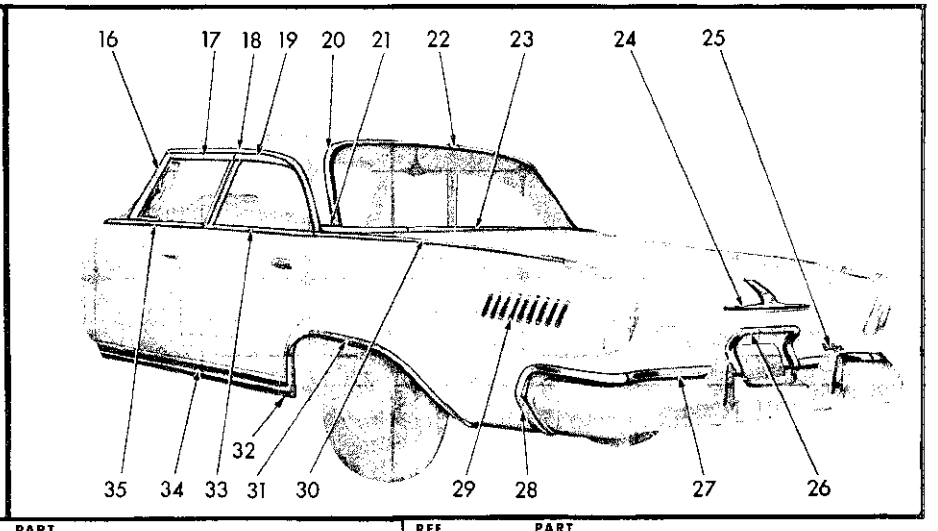

REF. NO.	QTY	PART NUMBER	DESCRIPTION
1	2	2099 734	ORNAMENT, Fender Side (12-15-21)
	4	6000 050	Clip
2	1	2196 503-4	MOULDING, Front Wheel Opening to Sill (12-15-2)
	2	6000 732	Clip
	4	125 978	Screw
3	1	2240 922-3	MOULDING, Fender Wheel Opening (12-15-2)
	10	6000 864	Clip
	10	9414 977	Nut
4	1	2099 872-3	NAME PLATE, w/Finish Plate (use with "L" shaped mldg.) (12-15-21)
	4	---- ---	Screw
	1	2276 878-9	NAME PLATE, w/Finish Plate (use with straight mldg.) (12-15-21)
	4	---- ---	Screw
5	1	2421 575-6	MOULDING, Parking Light Extension Lower ("L" shaped mldg.) (12-15-2)
	6	9411 618	Nut
	1	2275 988-9	MOULDING, Parking Light Extension Lower (straight mldg.) (12-15-2)
	6	9411 618	Nut
6	1	2099 824	BAR, Vertical, Center (7-16-47)
	1	2099 726	BAR, w/Medallion, Vertical, Center (7-16-47)
7	1	2099 808-9	BAR, Horizontal (7-16-47)
8	1	2099 658	FRAME, Grille (7-16-36)
9	1	2099 713	EXTENSION, Frame, Center (7-16-36)
	1	2099 714-5	EXTENSION, Frame, Outer (7-16-36)
10	1	2084 997	MOULDING PACKAGE, Windshield Outside Finish Lower Center (23-23-65)
	5	6000 685	Clip
11	1	2240 768	MOULDING PACKAGE, Windshield Outside Finish Upper (23-23-65)
	5	6000 927	Clip
12	1	2099 686-7	ORNAMENT, Fender Top (12-15-21)
	4	151 497	Nut
13	1	2298 573-4	MOULDING, Front Fender Top (12-15-2)
	12	6001 061	Clip
	2	6000 685	Clip

All Packages Include Attaching Parts

REF. NO.	QTY	PART NUMBER	DESCRIPTION
14	1	2240 769-70	MOULDING PACKAGE, Windshield Outside Finish Side (23-23-65)
	8	6022 010	Screw
15	1	2196 272-3	MOULDING PACKAGE, Windshield Outside Finish Lower End (23-23-65)
	2	6000 685	Clip
16	1	2240 873-4	MOULDING PACKAGE, Front Door Window Frame Front (23-23-32)
	6	6023 098	Screw
17	1	2240 866-7	MOULDING PACKAGE, Front Door Window Frame Upper (23-23-32)
	6	6022 059	Screw
18	1	2093 648-9	MOULDING, Roof Side Drain Trough (23-59-61)
19	1	2240 868-9	MOULDING PACKAGE, Rear Door Window Frame (23-23-33)
	8	6022 059	Screw
20	1	2196 282-3	MOULDING PACKAGE, Rear Window Outside Finish Upper and Side (23-23-52)
	10	6000 692	Clip
21	1	2275 025-6	MOULDING PACKAGE, Rear Window Outside Finish Lower End (23-23-52)
	2	6000 688	Clip
	2	6000 733	Clip
22	1	2093 479	CAP, Rear Window Outside Moulding Upper Center (23-23-41)
23	1	2196 292	MOULDING PACKAGE, Rear Window Outside Finish Lower Center (23-23-52)
	7	6000 689	Clip
24	1	2298 652	LIFT PACKAGE, Deck Lid, w/Ornament (23-19-11)
	5	151 497	Nut
25	1	2189 898	NAME PLATE, Deck Opening Lower Panel (23-34-184)
	2	152 259	Nut
26	1	2275 994	MOULDING PACKAGE, Deck Lower Panel License Depression (23-23-23)
	2	6022 052	Washer
	2	9411 618	Nut

REF. NO.	QTY	PART NUMBER	DESCRIPTION
27	1	2275 909-10	MOULDING PACKAGE, Deck Lower Panel (23-23-23)
	8	6006 165	Washer
	8	6022 052	Washer
	8	9411 618	Nut
28	1	2275 911-2	MOULDING PACKAGE, Quarter Panel Bumper Depression (23-23-39)
	2	6006 165	Washer
	6	6022 052	Washer
	6	9411 618	Nut
29	9	2189 658-9	LOUVER, Quarter Panel Outside (23-34-334)
	36	6000 808	Clip
	36	6022 052	Washer
30	1	2298 586-7	MOULDING PACKAGE, Quarter Panel Top (23-23-39)
	14	6023 126	Washer
	14	151 497	Nut
31	1	2196 526-7	MOULDING PACKAGE, Quarter Panel Wheel Opening (23-23-39)
	14	125 978	Screw
32	1	2196 528-9	DEFLECTOR PACKAGE, Quarter Panel Stone (23-34-240)
	6	125 978	Screw
33	1	2298 604-5	MOULDING PACKAGE, Rear Door Belt (23-23-33)
	10	6001 244	Clip
34	1	2196 734-5	MOULDING PACKAGE, Body Side Sill (23-23-2)
	8	6000 942	Clip
	8	161 895	Screw
	2	6010 046	Clip
	2	151 497	Nut
35	1	2298 602-3	MOULDING PACKAGE, Front Door Belt (23-23-32)
	8	6001 244	Clip
	2	6001 241	Fastener
	2	151 497	Nut

Part Type Code is Indicated in Parentheses **19x9238B**

MOULDINGS - CHRYSLER NEW YORKER SC3(H) 4 DOOR SEDAN

MyMopar.com

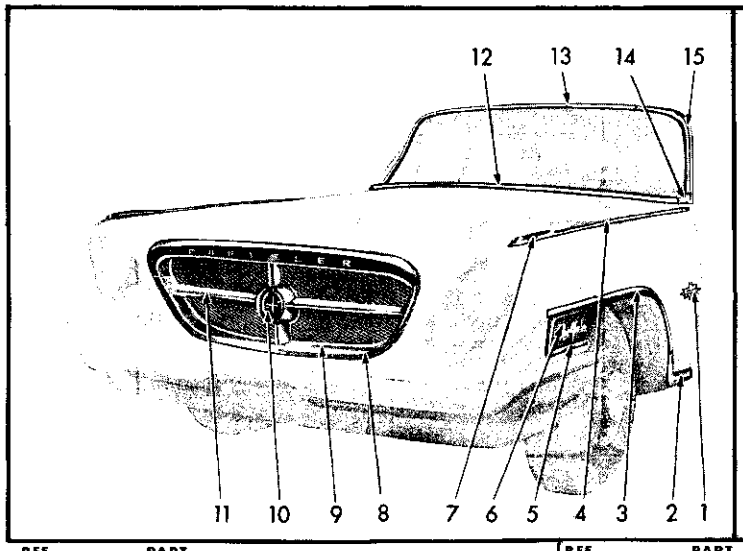

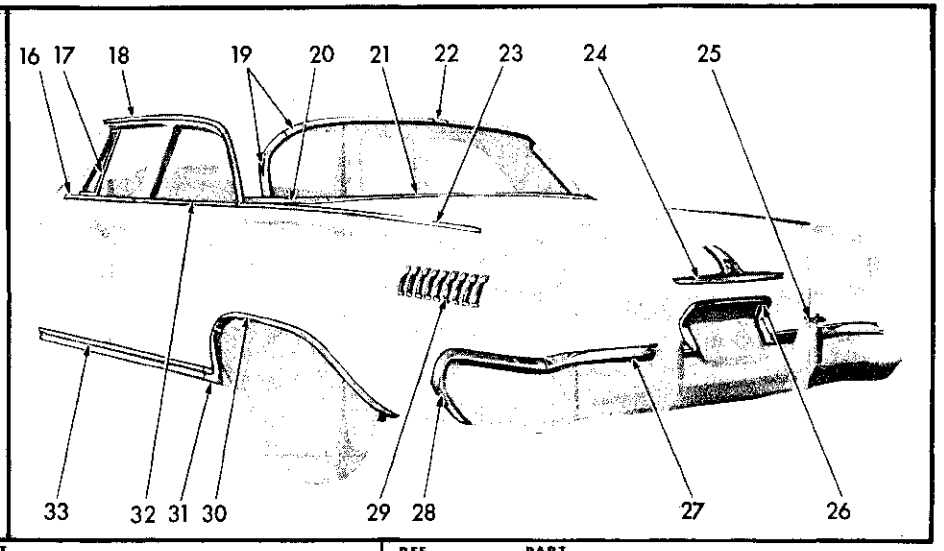

REF. NO.	QTY	PART NUMBER	DESCRIPTION
1	2	2099 734	ORNAMENT, Fender Side (12-15-21)
	4	6000 050	Clip
2	1	2196 503-4	MOULDING PACKAGE, Wheel Opening to Sill (12-15-2)
	2	6000 732	Clip 4 125 978 Screw
3	1	2240 922-3	MOULDING PACKAGE, Wheel Opening (12-15-2)
	10	6000 864	Clip 10 9414 977 Nut
4	1	2298 573-4	MOULDING PACKAGE, Fender Top (12-15-2)
	12	6001 061	Clip
5	1	2421 575-6	MOULDING, Parking Light Extension Lower ("L" shaped mldg.) (12-15-2)
	6	9411 618	Nut
	1	2275 988-9	MOULDING, Parking Light Extension Lower (straight mldg.) (12-15-2)
	6	9411 618	Nut
6	1	2099 872-3	NAME PLATE, w/Finish Plate (use with "L" shaped mldg.) (12-15-21)
	4	---- ---	Screw
	1	2276 878-9	NAME PLATE, w/Finish Plate (use with straight mldg.) (12-15-21)
	4	---- ---	Screw
7	1	2099 686-7	ORNAMENT, Fender Top (12-15-21)
	4	151 497	Nut
8	1	2099 658	FRAME, Radiator Grille (7-16-36)
9	1	2099 713	EXTENSION, Radiator Grille Frame Center (7-16-36)
	1	2099 714-5	EXTENSION, Radiator Grille Frame Right and Left (7-16-36)
10	1	2099 824	BAR, Radiator Grille Vertical (7-16-47)
	1	2099 726	BAR, Radiator Grille Vertical, w/Medallion (7-16-47)
11	1	2099 808-9	BAR, Radiator Grille Horizontal (7-16-47)
12	1	2084 997	MOULDING PACKAGE, Windshield Outside Finish Lower Center (23-23-65)
	5	6000 685	Clip
13	1	2240 768	MOULDING PACKAGE, Windshield Outside Finish Upper (23-23-65)
	5	6000 927	Clip
14	1	2196 272-3	MOULDING PACKAGE, Windshield Outside Finish Lower End (23-23-65)
	2	6000 685	Clip
15	1	2240 769-70	MOULDING PACKAGE, Windshield Outside Finish Side (23-23-65)
	8	6022 010	Screw
16	1	2298 602-3	MOULDING PACKAGE, Front Door Belt (23-23-32)
	8	6001 244	Clip
	2	6001 241	Fastener
	2	151 497	Nut
17	2	2254 627	MOULDING and CHANNEL, Door Vent Wing Division (23-64-48)
18	1	2093 648-9	MOULDING, Roof Side Drain Trough (23-59-61)
19	1	2196 288-9	MOULDING PACKAGE, Rear Window Outside Finish Upper and Side (23-23-52)
	10	6000 692	Clip
20	1	2275 027-8	MOULDING PACKAGE, Rear Window Outside Finish Lower End (23-23-52)
	2	6000 688	Clip
	2	6000 733	Clip
21	1	2196 292	MOULDING PACKAGE, Rear Window Outside Finish Lower Center (23-23-52)
	7	6000 689	Clip
22	1	2093 479	CAP, Rear Window Outside Moulding Upper Center (23-23-41)
23	1	2298 586-7	MOULDING PACKAGE, Quarter Panel Top (23-23-39)
	14	6023 126	Washer
	14	151 497	Nut
24	1	2298 652	LIFT PACKAGE, Deck Lid, w/Ornament (23-19-11)
	5	151 497	Nut
25	1	2189 898	NAME PLATE, Deck Opening Lower Panel (23-34-184)
	2	152 259	Nut
26	1	2275 994	MOULDING PACKAGE, Deck Lower Panel License Depression (23-23-23)
	2	6022 052	Washer
	2	9411 618	Nut
27	1	2275 909-10	MOULDING PACKAGE, Deck Lower Panel (23-23-23)
	8	6006 165	Washer
	8	6022 052	Washer
	8	9411 618	Nut
28	1	2275 911-2	MOULDING PACKAGE, Quarter Panel Bumper Depression (23-23-39)
	2	6006 165	Washer
	6	6022 052	Washer
	6	9411 618	Nut
29	9	2189 658-9	LOUVER, Quarter Panel Outside (23-34-334)
	36	6000 808	Clip
	36	6022 052	Washer
30	1	2196 526-7	MOULDING PACKAGE, Quarter Panel Wheel Opening (23-23-39)
	14	125 978	Screw
31	1	2196 528-9	DEFLECTOR PACKAGE, Quarter Panel Stone (23-34-240)
	6	125 978	Screw
32	1	2298 604-5	MOULDING PACKAGE, Rear Door Belt (23-23-33)
	10	6001 244	Clip
33	1	2196 734-5	MOULDING PACKAGE, Body Side Sill (23-23-2)
	8	6000 942	Clip 2 6010 046 Clip
	8	161 895	Screw 2 151 497 Nut

All Packages Include Attaching Parts

Part Type Code is Indicated in Parentheses **19x9258B**

MOULDINGS - CHRYSLER NEW YORKER SC3(H) SPECIAL 4 DOOR SEDAN

MyMopar.com

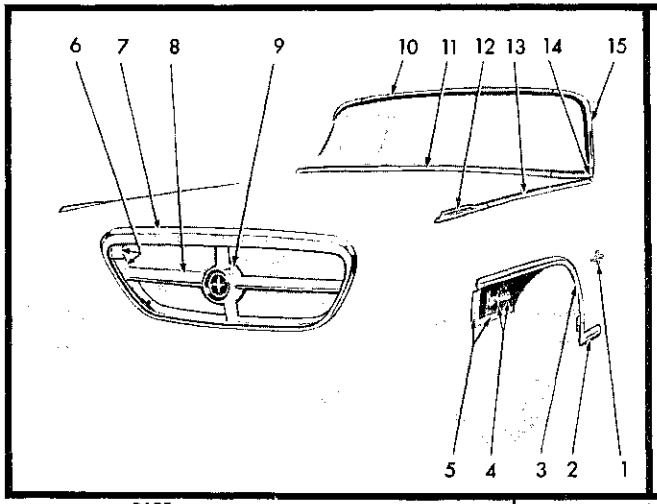

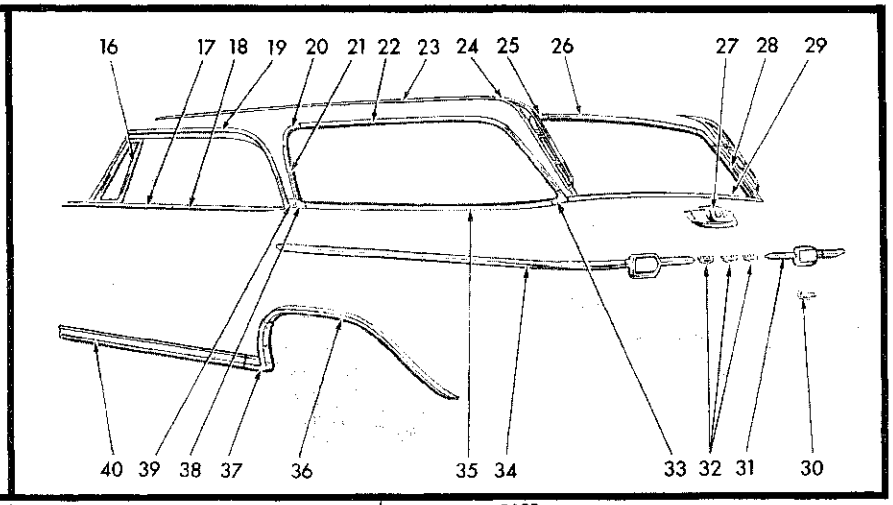

REF. NO.	QTY	PART NUMBER	DESCRIPTION
1	2	2099 734	ORNAMENT, Fender Side (12-15-21)
	4	6000 050	Clip
2	1	2196 503-4	MOULDING, Front Wheel Opening to Sill (12-15-2)
	2	6000 732	Clip 4 125 978 Screw
3	1	2240 922-3	MOULDING, Front Fender Wheel Opening (12-15-2)
	10	6000 864	Clip 10 9414 977 Nut
4	1	2099 872-3	NAME PLATE, w/Finish Plate (use with "L" shaped mldg.) (12-15-21)
	4	---- ---	Screw
	1	2276 878-9	NAME PLATE, w/Finish Plate (use with straight mldg.) (12-15-21)
	4	---- ---	Screw
5	1	2421 575-6	MOULDING, Parking Light Extension Lower ("L" shaped mldg.) (12-15-2)
	6	9411 618	Nut
	1	2275 988-9	MOULDING, Parking Light Extension Lower (straight mldg.) (12-15-2)
	6	9411 618	Nut
6	1	2099 713	EXTENSION, Frame, Center (7-16-36)
	1	2099 714-5	EXTENSION, Frame, Outer (7-16-36)
7	1	2099 658	FRAME, Grille (7-16-36)
8	1	2099 808-9	BAR, Horizontal (7-16-47)
9	1	2099 824	BAR, Vertical, Center (7-16-47)
	1	2099 726	BAR, w/Medallion, Center (7-16-47)
10	1	2240 768	MOULDING PACKAGE, Windshield Outside Finish Upper (23-23-65)
	5	6000 927	Clip
11	1	2084 997	MOULDING PACKAGE, Windshield Outside Finish Lower Center (23-23-65)
	5	6000 685	Clip
12	1	2099 686-7	ORNAMENT, Fender Top (12-15-21)
	4	151 497	Nut
13	1	2298 573-4	MOULDING, Front Fender Top (12-15-2)
	12	6001 061	Clip
14	1	2196 272-3	MOULDING PACKAGE, Windshield Outside Finish Lower End (23-23-65)
	2	6000 685	Clip

All Packages Include Attaching Parts

REF. NO.	QTY	PART NUMBER	DESCRIPTION
15	1	2240 769-70	MOULDING PACKAGE, Windshield Outside Finish Side (23-23-65)
	8	6022 010	Screw
16	2	2254 627	MOULDING and CHANNEL, Door Vent Wing Division (23-64-48)
17	1	2298 602-3	MOULDING PACKAGE, Front Door Belt (23-23-32)
	8	6001 244	Clip
	2	6001 241	Fastener
	2	151 497	Nut
18	1	2298 606-7	MOULDING PACKAGE, Rear Door Belt (23-23-33)
	8	6001 244	Clip
19	1	2093 648-9	MOULDING, Roof Side Drain Trough (23-59-61)
20	1	2094 016-7	CAP and RETAINER, Quarter Window Outside Front Upper (23-23-74)
21	1	2094 018-9	MOULDING, Quarter Window Front Outside Finish (23-23-73)
22	1	1961 212-3	MOULDING, Quarter Window Upper Outside Finish (23-23-73)
23	2	2196 252	MOULDING PACKAGE, Roof Top, used w/Rear Pillar Assist Handle (23-23-42)
	20	6006 301	Clip
	2	2196 253	MOULDING PACKAGE, Roof Top, used w/o Rear Pillar Assist Handle (23-23-42)
	28	6006 301	Clip
24	2	2196 839	HANDLE PACKAGE, Roof Panel Rear Pillar Assist (23-36-123)
	8	6006 035	Nut
	2	681 135	Bolt
25	1	2196 464-5	CAP PACKAGE, Roof Rear Tailgate Opening Moulding (23-23-60)
	2	6006 451	Clip
26	1	2196 466	MOULDING PACKAGE, Roof Opening Rear (23-23-60)
	7	6006 451	Clip
27	1	2188 389	ORNAMENT, Tailgate Outside Panel Electric Window Lift (23-54-11)
	3	151 497	Nut and Washer

REF. NO.	QTY	PART NUMBER	DESCRIPTION
28	1	2196 462-3	MOULDING PACKAGE, Rear Pillar Tailgate Opening (23-23-60)
	*	6006 451	Clip
29	1	2196 460	MOULDING PACKAGE, Tailgate Outside Finish Belt (23-23-61)
	2	6006 441	Clip
	2	151 306	Screw
30	1	2189 898	NAME PLATE, Tailgate Outside Panel (23-54-11)
	2	445 160	Clip
31	1	2275 031-2	MOULDING PACKAGE, Tailgate Outside Panel Bumper (23-23-61)
	4	151 497	Nut
32	3	2189 807	ORNAMENT, Tailgate Outside Panel (Castle) (23-54-11)
33	1	2196 816-7	CAP PACKAGE, Quarter Window Outside Finish Lower Rear (23-23-74)
34	2	2275 993	MOULDING PACKAGE, Quarter Panel Upper (23-23-39)
	4	6000 820	Clip
	16	6000 822	Clip
35	1	1961 214-5	MOULDING, Quarter Window Lower Outside Finish (23-23-73)
36	1	2196 180-1	MOULDING PACKAGE, Quarter Panel Wheel Opening (23-23-39)
	14	125 978	Screw
37	1	2196 184-5	DEFLECTOR PACKAGE, Quarter Panel Stone (23-34-240)
	2	125 978	Screw
	4	6000 028	Nut
38	2	1961 210	CAP, Quarter Window Outside Finish Lower Front Moulding (23-23-74)
39	1	2299 430-1	MOULDING PACKAGE, Quarter Panel Belt (23-23-39)
	2	9411 465	Screw
40	1	2299 416-7	MOULDING PACKAGE, Body Side Sill (23-23-2)
	8	6000 942	Clip
	8	161 895	Screw
	2	6010 046	Clip
	2	151 497	Nut

Part Type Code is Indicated in Parentheses **19x9237B**

MOULDINGS - CHRYSLER NEW YORKER SC3(H) SUBURBAN

MyMopar.com

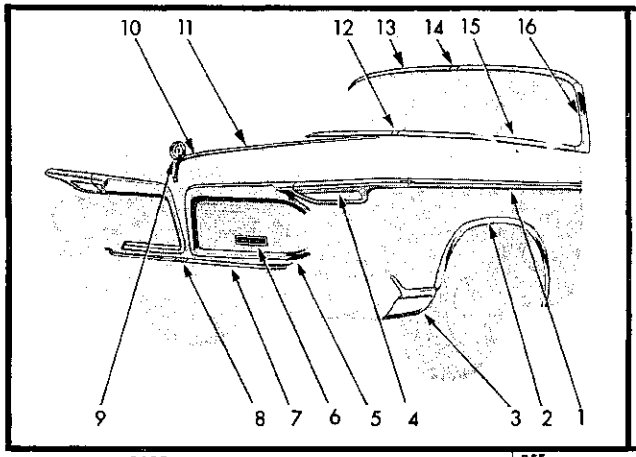

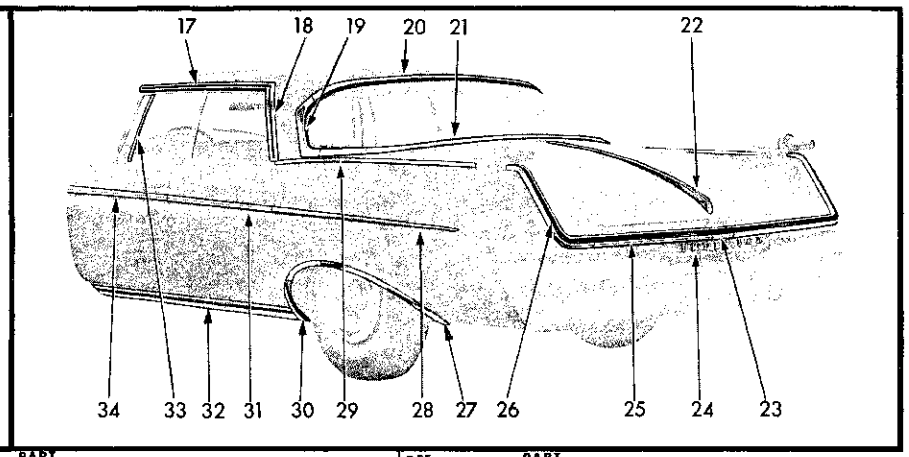

REF. NO.	QTY	PART NUMBER	DESCRIPTION
1	1	2298 695-6	MOULDING PACKAGE, Fender Side Upper (12-15-2)
	12	6001 251	Clip
	4	6001 252	Fastener
	2	6001 060	Retainer
	2	2252 081	Spacer
	4	151 497	Nut
2	1	2240 940-1	MOULDING PACKAGE, Fender Wheel Opening (12-15-2)
	16	9413 197	Screw
3	1	2240 938-9	MOULDING PACKAGE, Fender Front Lower (12-15-2)
	6	180 020	Screw
	8	120 375	Nut
	2	1904 121	Clip
4	1	2298 706-7	MOULDING PACKAGE, Fender Front Upper (12-15-2)
	6	151 497	Nut
5	1	2099 634-5	FRAME, Radiator Grille (7-16-36)
	16	---- ---	Nut
	4	120 375	Nut
6	1	2099 636	NAME PLATE, Radiator Grille (7-16-61)
	2	151 497	Nut
7	1	2275 922-3	MOULDING PACKAGE, Radiator Grille Panel (7-16-36)
	10	120 375	Nut
8	1	2275 192	CAP PACKAGE, Radiator Grille Panel Moulding (7-16-44)
	1	120 375	Nut
9	1	2099 852	ORNAMENT, Extension and Medallion, Fender Top (12-15-21)
	3	151 497	Nut
10	*	2417 203	TAPE, Fender Top Panel Ornament (12-15-33)
11	1	2275 987	MOULDING, Hood Top (15-25-2)
	7	9415 250	Nut
12	1	1692 191	CAP, Windshield Outside Finish Moulding Lower Center Joint (23-23-66)
13	1	2298 550-1	MOULDING PACKAGE, Windshield Outside Finish Upper Moulding (23-23-65)
	4	6000 858	Retainer
	6	1961 286	Washer
	2	6006 338	Retainer
	6	---- ---	Nut

All Packages Include Attaching Parts

REF. NO.	QTY	PART NUMBER	DESCRIPTION
14	1	1750 754	CAP, Windshield Outside Finish Moulding Upper Center Joint (23-23-66)
15	1	2196 477-8	MOULDING PACKAGE, Windshield Outside Finish Lower (23-23-65)
	20	6006 200	Clip
16	1	2196 472-3	MOULDING PACKAGE, Windshield Outside Finish Side (23-23-65)
	8	6000 000	Screw
17	1	2189 988-9	MOULDING, Roof Side Drain Trough (23-59-61)
18	1	2275 904-5	MOULDING PACKAGE, Roof Panel Outside Finish Side (23-23-42)
	4	1961 286	Washer
	4	9411 618	Nut
19	1	2298 580-1	MOULDING PACKAGE, Rear Window Outside Finish Side (23-23-52)
	4	6001 242	Clip
	2	6001 243	Clip
	6	271 472	Nut
20	1	2298 579	MOULDING PACKAGE, Rear Window Outside Finish Upper (23-23-52)
	5	6001 242	Clip
	5	6001 246	Slide Fastener
21	1	2298 577-8	MOULDING PACKAGE, Rear Window Outside Finish Lower (23-23-52)
	10	6001 242	Clip
	10	6001 246	Slide Fastener
22	1	2275 906	MOULDING PACKAGE, Deck Lid, w/Lock Cylinder Cover (23-23-30)
	1	9416 929	Screw
	1	151 497	Nut
	4	6006 263	Nut
23	1	2189 606	MOULDING, Deck Lower Panel Fuel Filler Door (23-23-23)
	2	---- ---	Screw
24	2	2252 161	I, Deck Opening Lower Panel Letter (23-34-184)
	1	2252 162	M
	1	2252 163	P
	1	2189 611	E
	1	2189 612	R
	1	2252 164	A
	1	2252 165	L
	*	6006 468	Clip

REF. NO.	QTY	PART NUMBER	DESCRIPTION
25	1	2298 582-3	MOULDING PACKAGE, Deck Lower Panel (23-23-23)
	8	6022 983	Washer
	8	---- ---	Nut
26	1	2275 977-8	MOULDING PACKAGE, Quarter Panel Peak Rear (23-23-39)
	6	6022 983	Washer
	6	---- ---	Nut
27	1	2196 820-1	MOULDING PACKAGE, Quarter Panel Wheel Opening (23-23-39)
	10	9413 197	Screw
28	1	2275 996-7	MOULDING PACKAGE, Quarter Panel Lower (23-23-39)
	4	6000 505	Clip
	6	2189 874	Washer
	2	151 497	Nut
29	2	2275 971	MOULDING PACKAGE, Quarter Panel Peak Front (23-23-39)
	14	6022 983	Washer
	14	---- ---	Nut
30	1	2196 818-9	DEFLECTOR PACKAGE, Quarter Panel Stone (23-34-240)
	6	9414 080	Screw
31	1	2298 689-90	MOULDING PACKAGE, Rear Door (23-23-33)
	6	6001 251	Clip
	4	6000 832	Retainer
	4	151 497	Nut
32	1	2275 107-8	MOULDING PACKAGE, Body Side Sill (23-23-2)
	8	6000 938	Clip
	16	9414 586	Screw
	2	9417 515	Screw
33	2	1751 325	MOULDING, Front Door Vent Wing Division Channel Inner (23-23-36)
	2	1751 323	MOULDING, Front Door Vent Wing Division Channel Outer (23-23-36)
34	2	2298 687	MOULDING PACKAGE, Front Door (23-23-32)
	6	6001 251	Clip
	4	6000 832	Retainer
	4	151 497	Nut

Part Type Code is Indicated in Parentheses **19x9242B**

MOULDINGS - IMPERIAL CUSTOM SY1(L) SPECIAL 4 DOOR SEDAN

MyMopar.com

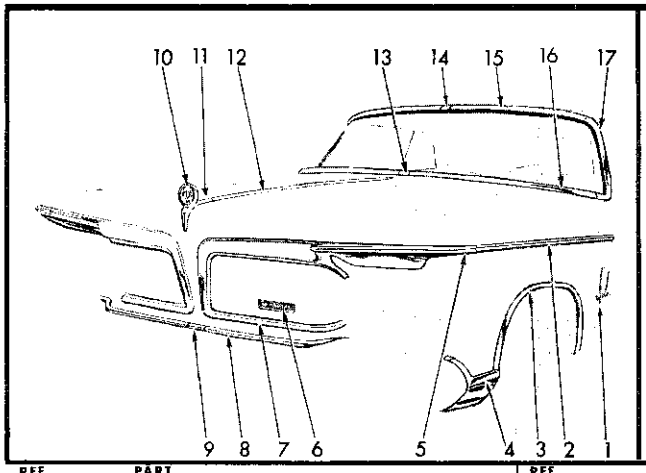

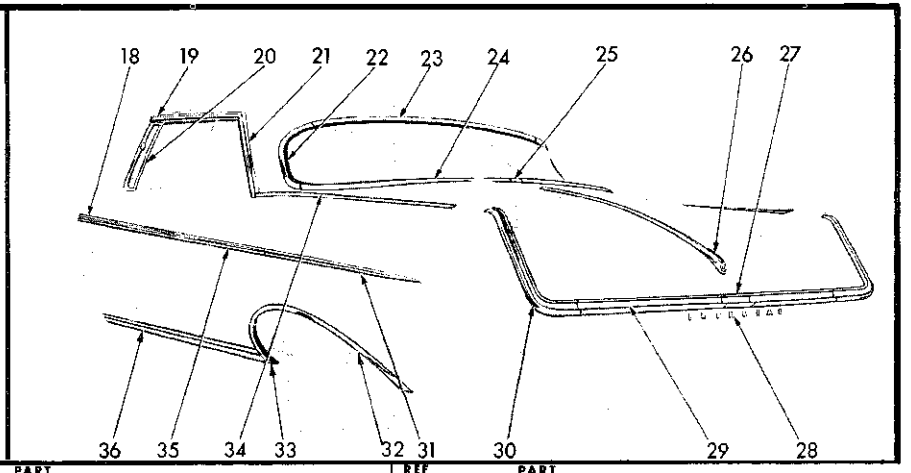

REF. NO.	QTY	PART NUMBER	DESCRIPTION
1	2	2240 942	NAME PLATE, Fender Side (12-15-21)
	12	6000 050	Clip
2	1	2298 695-6	MOULDING PACKAGE, Fender Side Upper (12-15-2)
	2	6001 060	Retainer
	2	2252 081	Spacer
	4	6001 252	Fastener
	12	6001 251	Clip
	4	151 497	Nut
3	1	2240 940-1	MOULDING PACKAGE, Fender Wheel Opening (12-15-2)
	16	9413 197	Screw
4	1	2240 938-9	MOULDING PACKAGE, Fender Front Lower (12-15-2)
	2	1904 121	Clip
	6	6022 506	Screw
	8	120 375	Nut
5	1	2298 706-7	MOULDING PACKAGE, Fender Front Upper (12-15-2)
	6	6010 020	Stud
	6	151 497	Nut
6	1	2099 636	NAME PLATE, Radiator Grille (7-16-61)
7	1	2099 634-5	FRAME, Radiator Grille (7-16-36)
8	1	2275 922-3	MOULDING PACKAGE, Radiator Grille Lower Panel (7-16-36)
	11	6022 162	Nut
9	1	2275 192	CAP, Radiator Grille Lower Panel Moulding (7-16-44)
10	1	2099 852	ORNAMENT and MEDALLION, Fender Top Panel (12-15-21)
	1	151 497	Nut
11	*	2417 203	TAPE, Fender Top Panel Ornament (12-15-33)
12	1	2275 987	MOULDING PACKAGE, Hood Top (15-25-2)
	7	9415 250	Nut
13	1	1692 191	CAP, Windshield Moulding Lower Center Joint (23-23-66)
14	1	1750 754	CAP, Windshield Upper Moulding Center Joint (23-23-66)
15	1	2298 550-1	MOULDING PACKAGE, Windshield Outside Finish Upper (23-23-65)
	4	6000 858	Retainer
	2	6006 338	Retainer
	6	1961 286	Washer
	6	---- ---	Nut

All Packages Include Attaching Parts

REF. NO.	QTY	PART NUMBER	DESCRIPTION
16	1	2196 477-8	MOULDING PACKAGE, Windshield Outside Finish Lower (23-23-65)
	20	6006 200	Clip
17	1	2196 472-3	MOULDING PACKAGE, Windshield Outside Finish Side (23-23-65)
	8	6000 000	Clip
18	2	2298 685	MOULDING PACKAGE, Door (23-23-32)
	8	6001 251	Clip
	4	6000 832	Retainer
	4	151 497	Nut
19	1	2189 986-7	MOULDING, Roof Side Drain Trough (23-59-61)
20	2	1751 325	MOULDING, Door Vent Wing Division Channel, Inner (23-23-36)
	2	1751 323	MOULDING, Door Vent Wing Division Channel, Outer (23-23-36)
21	1	2275 902-3	MOULDING PACKAGE, Roof Panel Outside Finish Side (23-23-42)
	4	1961 286	Washer
	4	9411 618	Nut
22	1	2196 826-7	MOULDING PACKAGE, Rear Window Outside Finish Side (23-23-52)
	12	6006 201	Clip
23	1	2196 823	MOULDING PACKAGE, Rear Window Outside Finish Upper (23-23-52)
	14	6006 201	Clip
24	1	2196 880-1	MOULDING PACKAGE, Rear Window Outside Finish Lower (23-23-52)
	16	6006 200	Clip
25	1	2188 375	CAP, Rear Window Outside Lower Moulding (23-23-41)
26	1	2275 906	MOULDING PACKAGE, Deck Lid, w/Lock Cylinder Cover (23-23-30)
	1	9416 929	Screw
	1	151 497	Nut
	4	6006 263	Nut
27	1	2189 606	MOULDING, Deck Lower Panel Fuel Filler Door (23-23-23)
	2	---- ---	Screw

REF. NO.	QTY	PART NUMBER	DESCRIPTION
28	2	2252 161	I, LETTERS, Deck Opening Lower Panel (23-34-184)
	1	2252 162	M
	1	2253 163	P
	1	2189 611	E
	1	2189 612	R
	1	2252 164	A
	1	2252 165	L
	*	6006 468	Clip
29	1	2298 582-3	MOULDING PACKAGE, Deck Lower Panel (23-23-23)
	8	6022 983	Washer
	8	---- ---	Nut
30	1	2275 977-8	MOULDING PACKAGE, Quarter Panel Top Rear (23-23-39)
	6	6022 983	Washer
	6	---- ---	Nut
31	1	2275 998-9	MOULDING PACKAGE, Quarter Panel Lower Rear (23-23-39)
	6	2189 874	Washer
	4	6000 505	Clip
	2	151 497	Nut
32	1	2196 820-1	MOULDING PACKAGE, Quarter Panel Wheel Opening (23-23-39)
	10	9413 197	Screw
33	1	2196 818-9	DEFLECTOR PACKAGE, Quarter Panel Stone (23-34-240)
	6	9414 080	Screw
34	2	2275 971	MOULDING PACKAGE, Quarter Panel Top Front (23-23-39)
	14	6022 983	Washer
	14	---- ---	Nut
35	1	2298 691-2	MOULDING PACKAGE, Quarter Panel Lower Front (23-23-39)
	4	6000 832	Retainer
	4	6001 251	Clip
	4	151 497	Nut
36	1	2275 107-8	MOULDING PACKAGE, Body Side Sill (23-23-2)
	8	6000 938	Clip
	16	9414 586	Screw
	2	9417 515	Screw

Part Type Code is Indicated in Parentheses **19x9260B**

MOULDINGS - IMPERIAL CUSTOM SY1(L) SPECIAL CLUB COUPE

MyMopar.com

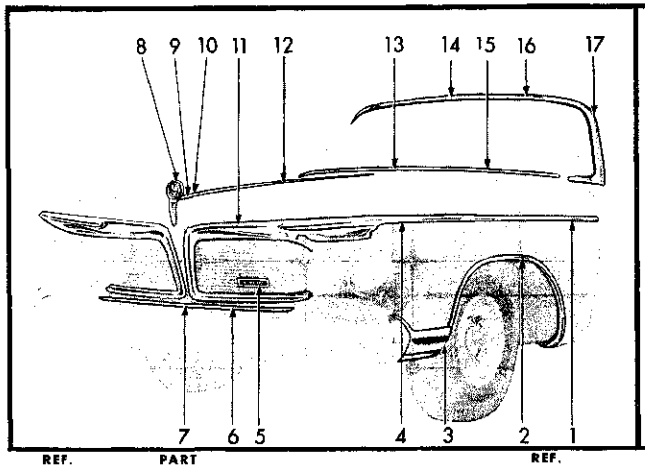

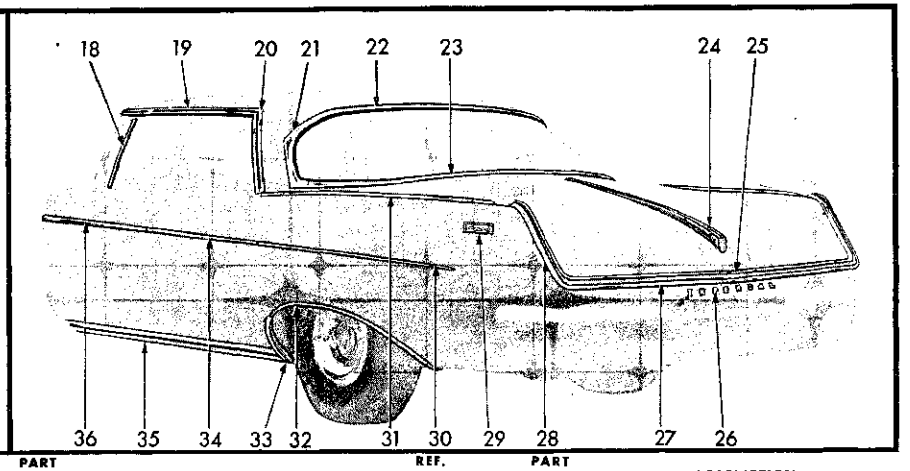

REF. NO.	QTY	PART NUMBER	DESCRIPTION
1	1	2298 695-6	MOULDING PACKAGE, Fender Side Upper (12-15-2)
	12	6001 251	Clip 4 151 497 Nut
	2	6001 060	Retainer
	2	2252 081	Spacer
	4	6001 252	Fastener
2	1	2240 940-1	MOULDING PACKAGE, Fender Wheel Opening (12-15-2)
	16	9413 197	Screw
3	1	2240 938-9	MOULDING PACKAGE, Fender Front Lower (12-15-2)
	6	6022 506	Screw
	2	1904 121	Clip
	8	120 375	Nut
4	1	2298 706-7	MOULDING PACKAGE, Fender Front Upper (12-15-2)
	6	151 497	Nut
5	1	2099 636	NAME PLATE, Radiator Grille (7-16-61)
	2	151 497	Nut
6	1	2275 922-3	MOULDING, Radiator Grille Lower Panel (7-16-36)
	10	120 375	Nut
7	1	2275 192	CAP, Radiator Grille Lower Moulding (7-16-44)
	2	9413 272	Screw
	1	120 375	Nut
8	1	2099 638	MEDALLION, Fender Top Panel Ornament (12-15-21)
9	1	2099 852	ASSEMBLY, Fender Top Panel Ornament, Extension, and Medallion (12-15-21)
	3	151 497	Nut
10	*	2417 203	TAPE, Fender Top Panel Ornament (12-15-33)
11	1	2099 634-5	FRAME, Radiator Grille (7-16-36)
	16	---- ---	Nut 4 151 497 Nut
12	1	2275 987	MOULDING PACKAGE, Hood Top (15-25-2)
	7	9415 250	Nut
13	1	1692 191	CAP, Windshield Outside Finish Moulding Lower Center Joint (23-23-66)
14	1	1750 574	CAP, Windshield Outside Finish Moulding Joint Upper (23-23-66)
15	1	2196 477-8	MOULDING PACKAGE, Windshield Outside Finish Lower (23-23-65)
	20	6006 200	Clip
16	1	2298 550-1	MOULDING PACKAGE, Windshield Outside Finish Upper (23-23-65)
	4	6000 858	Retainer
	2	6006 338	Retainer
	6	1961 286	Washer
	6	---- ---	Nut
17	1	2196 472-3	MOULDING PACKAGE, Windshield Outside Finish Side (23-23-65)
	8	6000 000	Screw
18	2	1751 325	MOULDING, Front Door Vent Wing Division Channel, Inner (23-23-36)
	2	1751 323	MOULDING, Front Door Vent Wing Division Channel, Outer (23-23-36)
19	1	2189 988-9	MOULDING, Roof Side Drain Trough (23-59-61)
20	1	2275 904-5	MOULDING PACKAGE, Roof Panel Outside Finish Side (23-23-42)
	4	1961 286	Washer
	4	9411 618	Nut
21	1	2298 580-1	MOULDING PACKAGE, Rear Window Outside Finish Side (23-23-52)
	4	6001 242	Clip
	2	6001 243	Clip
	6	271 472	Nut
22	1	2298 579	MOULDING PACKAGE, Rear Window Outside Finish Upper (23-23-52)
	5	6001 242	Clip
	5	6001 246	Slide Fastener
23	1	2298 577-8	MOULDING PACKAGE, Rear Window Outside Finish Lower (23-23-52)
	10	6001 242	Clip
	10	6001 246	Slide Fastener
24	1	2275 906	MOULDING and LOCK CYLINDER COVER PACKAGE, Deck Lid (23-23-30)
	1	9416 929	Screw
	1	151 497	Nut
	4	6006 262	Nut
	1	2252 098	Gasket (not included in pkg.)
25	1	2189 606	MOULDING, Deck Opening Lower Panel Fuel Filler Door (23-23-23)
	2	---- ---	Screw
26	2	2252 161	LETTERS, Deck Opening Lower Panel I (23-34-184)
	1	2252 162	M
	1	2252 163	P
	1	2189 611	E
	1	2189 612	R
	1	2252 164	A
	1	2252 165	L
	*	6006 468	Clip
27	1	2298 582-3	MOULDING PACKAGE, Deck Opening Lower Panel (23-23-23)
	8	6022 983	Washer
	8	---- ---	Nut
28	1	2275 977-8	MOULDING PACKAGE, Quarter Panel Rear (23-23-39)
	6	6022 983	Washer
	6	---- ---	Nut
29	2	2189 687	ORNAMENT, Quarter Outside Panel Crown (23-34-334)
	4	152 260	Nut and Seal
30	1	2275 996-7	MOULDING PACKAGE, Quarter Panel Lower (23-23-39)
	6	2189 874	Washer
	4	6000 505	Clip 2 ---- --- Nut
31	2	2275 971	MOULDING PACKAGE, Quarter Panel Upper Front (23-23-39)
	14	6022 983	Washer
	14	---- ---	Nut
32	1	2196 820-1	MOULDING PACKAGE, Quarter Panel Wheel Opening (23-23-39)
	10	9413 197	Screw
33	1	2196 818-9	DEFLECTOR PACKAGE, Quarter Panel Stone (23-34-240)
	6	9414 080	Screw
34	1	2298 689-90	MOULDING PACKAGE, Rear Door (23-23-33)
	6	6001 251	Clip
	4	6000 832	Retainer 4 151 497 Nut
35	1	2275 107-8	MOULDING PACKAGE, Body Side Sill (23-23-2)
	8	6000 938	Clip
	16	9414 586	Screw 2 9417 515 Screw
36	2	2298 687	MOULDING PACKAGE, Front Door (23-23-32)
	6	6001 251	Clip
	4	6000 832	Retainer
	4	151 497	Nut

All Packages Include Attaching Parts

Part Type Code is Indicated in Parentheses **19x9193B**

MOULDINGS - IMPERIAL CROWN SY1(M) SPECIAL 4 DOOR SEDAN

MyMopar.com

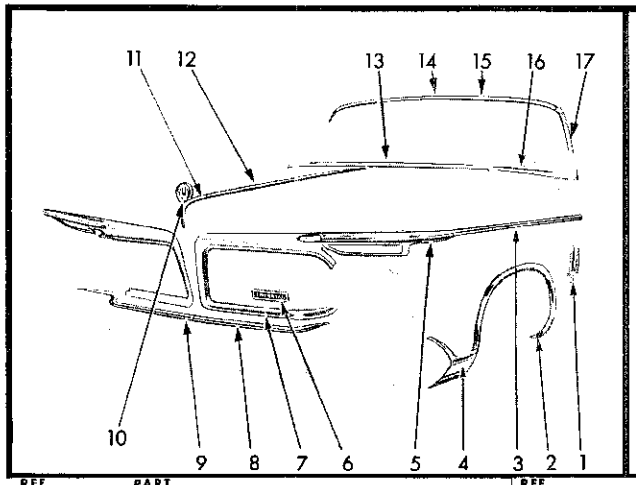

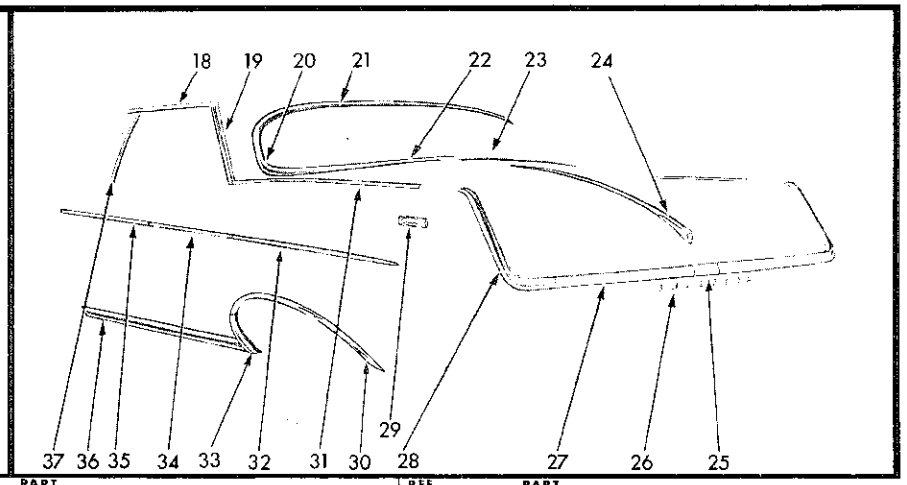

REF. NO.	QTY	PART NUMBER	DESCRIPTION
1	2	2240 942	NAME PLATE, Fender Side (12-15-21)
	12	6000 050	Clip
2	1	2240 940-1	MOULDING PACKAGE, Fender Wheel Opening (12-15-2)
	16	9413 197	Screw
3	1	2298 695-6	MOULDING PACKAGE, Fender Side Upper (12-15-2)
	2	6001 060	Retainer
	2	2252 081	Spacer
	4	6001 252	Fastener
	12	6001 251	Clip
	4	151 497	Nut
4	1	2240 938-9	MOULDING PACKAGE, Fender Front Lower (12-15-2)
	2	1904 121	Clip
	6	6022 506	Screw
	8	120 375	Nut
5	1	2298 706-7	MOULDING PACKAGE, Fender Front Upper (12-15-2)
	6	6010 020	Stud
	6	151 497	Nut
6	1	2099 636	NAME PLATE, Radiator Grille (7-16-61)
7	1	2099 634-5	FRAME, Radiator Grille (7-16-36)
8	1	2275 922-3	MOULDING PACKAGE, Radiator Grille Lower Panel (7-16-36)
	11	6022 162	Nut
9	1	2275 192	CAP, Radiator Grille Lower Panel Moulding (7-16-44)
10	1	2099 852	ORNAMENT and MEDALLION, Fender Top Panel (12-15-21)
	1	151 497	Nut
11	*	2417 203	TAPE, Fender Top Panel Ornament (12-15-33)
12	1	2275 987	MOULDING PACKAGE, Hood Top (15-25-2)
	7	9415 250	Nut
13	1	1692 191	CAP, Windshield Moulding Lower Center Joint (23-23-66)
14	1	1750 754	CAP, Windshield Upper Moulding Center Joint (23-23-66)
15	1	2298 550-1	MOULDING PACKAGE, Windshield Outside Finish Upper (23-23-65)
	4	6000 858	Retainer
	2	6006 338	Retainer
	6	1961 286	Washer
	6	---- ---	Nut
16	1	2196 477-8	MOULDING PACKAGE, Windshield Outside Finish Lower (23-23-65)
	20	6006 200	Clip
17	1	2196 472-3	MOULDING PACKAGE, Windshield Outside Finish Side (23-23-65)
	8	6000 000	Clip
18	1	2189 986-7	MOULDING, Roof Side Drain Trough (23-59-61)
19	1	2275 902-3	MOULDING PACKAGE, Roof Panel Outside Finish Side (23-23-42)
	4	1961 286	Washer
	4	9411 618	Nut
20	1	2196 826-7	MOULDING PACKAGE, Rear Window Outside Finish Side (23-23-52)
	12	6006 201	Clip
21	1	2196 823	MOULDING PACKAGE, Rear Window Outside Finish Upper (23-23-52)
	14	6006 201	Clip
22	1	2196 880-1	MOULDING PACKAGE, Rear Window Outside Finish Lower (23-23-52)
	16	6006 200	Clip
23	1	2188 375	CAP, Rear Window Outside Lower Moulding (23-23-41)
24	1	2275 906	MOULDING PACKAGE, Deck Lid, w/Lock Cylinder Cover (23-23-30)
	1	9416 929	Screw
	1	151 497	Nut
	4	6006 263	Nut
25	1	2189 606	MOULDING, Deck Lower Panel Fuel Filler Door (23-23-23)
	2	---- ---	Screw
26	2	2252 161	I, LETTERS, Deck Opening Lower Panel (23-34-184)
	1	2252 162	M
	1	2253 163	P
	1	2189 611	E
	1	2189 612	R
	1	2252 164	A
	1	2252 165	L
	*	6006 468	Clip
27	1	2298 582-3	MOULDING PACKAGE, Deck Lower Panel (23-23-23)
	8	6022 983	Washer
	8	---- ---	Nut
28	1	2275 977-8	MOULDING PACKAGE, Quarter Panel Top Rear (23-23-39)
	6	6022 983	Washer
	6	---- ---	Nut
29	2	2189 687	ORNAMENT, Quarter Outside Panel Crown (23-34-334)
	4	152 260	Nut and Seal
30	1	2196 820-1	MOULDING PACKAGE, Quarter Panel Wheel Opening (23-23-39)
	10	9413 197	Screw
31	2	2275 971	MOULDING PACKAGE, Quarter Panel Top Front (23-23-39)
	14	6022 983	Washer
	14	---- ---	Nut
32	1	2275 998-9	MOULDING PACKAGE, Quarter Panel Lower Rear (23-23-39)
	6	2189 874	Washer
	4	6000 505	Clip
	2	151 497	Nut
33	1	2196 818-9	DEFLECTOR PACKAGE, Quarter Panel Stone (23-34-240)
	6	9414 080	Screw
34	1	2298 691-2	MOULDING PACKAGE, Quarter Panel Lower Front (23-23-39)
	4	6000 832	Retainer
	4	6001 251	Clip
	4	151 497	Nut
35	2	2298 685	MOULDING PACKAGE, Door (23-23-32)
	8	6001 251	Clip
	4	6000 832	Retainer
	4	151 497	Nut
36	1	2275 107-8	MOULDING PACKAGE, Body Side Sill (23-23-2)
	8	6000 938	Clip
	16	9414 586	Screw
	2	9417 515	Screw
37	2	1751 325	MOULDING, Door Vent Wing Division Channel Inner (23-23-36)
	2	1751 323	MOULDING, Door Vent Wing Division Channel Outer (23-23-36)

All Packages Include Attaching Parts

Part Type Code is Indicated in Parentheses

19x9265B

MOULDINGS - IMPERIAL CROWN SY1(M) SPECIAL CLUB COUPE

MyMopar.com

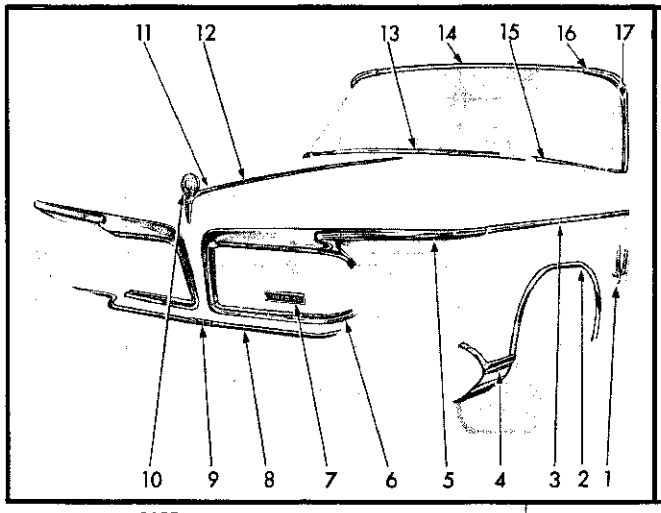

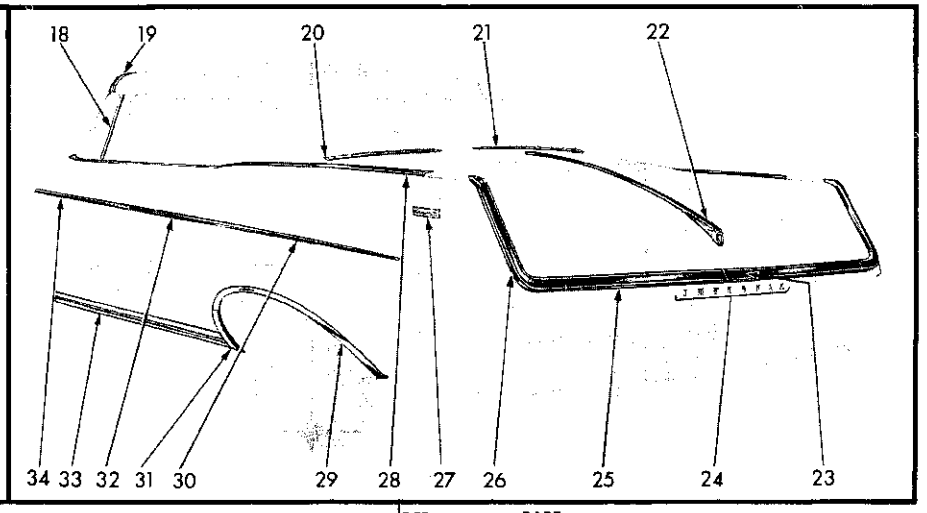

REF. NO.	QTY	PART NUMBER	DESCRIPTION
1	2	2240 942	NAME PLATE, Fender Side (12-15-21)
	12	6000 050	Clip
2	1	2240 940-1	MOULDING PACKAGE, Fender Wheel Opening (12-15-2)
	16	9413 197	Screw
3	1	2298 695-6	MOULDING PACKAGE, Fender Side Upper (12-15-2)
	2	6001 060	Retainer
	2	2252 081	Spacer
	4	6001 252	Fastener
	12	6001 251	Clip
	4	151 497	Nut
4	1	2240 938-9	MOULDING PACKAGE, Fender Front Lower (12-15-2)
	2	1904 121	Clip
	6	6022 506	Screw
	8	120 375	Nut
5	1	2298 706-7	MOULDING PACKAGE, Fender Front Upper (12-15-2)
	6	6010 020	Stud
	6	151 497	Nut
6	1	2099 634-5	FRAME, Radiator Grille (7-16-36)
7	1	2099 636	NAME PLATE, Radiator Grille (7-16-61)
8	1	2275 922-3	MOULDING PACKAGE, Grille Lower Panel (7-16-36)
	11	6022 162	Nut
9	1	2275 192	CAP, Grille Lower Panel Moulding (7-16-44)
10	1	2099 852	ORNAMENT and MEDALLION, Fender Top (12-15-21)
	1	151 497	Nut
11	*	2417 203	TAPE, Fender Top Panel Ornament (12-15-33)
12	1	2275 987	MOULDING PACKAGE, Hood Top (15-25-2)
	7	9415 250	Nut
13	1	1692 191	CAP, Windshield Moulding Lower Center Joint (23-23-66)
14	1	2196 749	MOULDING PACKAGE, Windshield Outside Finish Moulding Upper (23-23-65)
	10	6006 176	Stud 10 6006 434 Retainer

All Packages Include Attaching Parts

REF. NO.	QTY	PART NUMBER	DESCRIPTION
15	1	2196 477-8	MOULDING PACKAGE, Windshield Outside Finish Lower (23-23-65)
	20	6006 200	Clip
16	1	2196 673-4	MOULDING PACKAGE, Windshield Header Upper Corner (23-23-65)
	4	---- ---	Screw
17	1	2196 481-2	MOULDING PACKAGE, Windshield Outside Finish Side (23-23-65)
	6	6000 000	Screw
	2	---- ---	Screw
18	2	1751 325	MOULDING, Door Vent Wing Division Channel Inner (23-23-36)
	2	1751 323	MOULDING, Door Vent Wing Division Channel Outer (23-23-36)
19	1	2196 483	MOULDING PACKAGE, Folding Top Header (23-58-240)
	11	274 110	Screw
20	1	2196 682-3	CAP PACKAGE, Belt Moulding to Quarter Panel (23-23-41)
	2	---- ---	Screw
21	1	2196 684-5	MOULDING PACKAGE, Folding Top Belt Outside Finish (23-23-49)
	20	2094 380	Fastener
22	1	2275 906	MOULDING PACKAGE, Deck Lid, w/Lock Cylinder Cover (23-23-30)
	1	9416 929	Screw
	1	151 497	Nut
	4	6006 263	Nut
23	1	2189 606	MOULDING, Deck Lower Panel Fuel Filler Door (23-23-23)
	2	---- ---	Screw
24	2	2252 161	I, LETTERS, Deck Opening Lower Panel (23-34-184)
	1	2252 162	M
	1	2252 163	P
	1	2189 611	E
	1	2189 612	R
	1	2252 164	A
	1	2252 165	L
	*	6006 468	Clip

REF. NO.	QTY	PART NUMBER	DESCRIPTION
25	1	2298 582-3	MOULDING PACKAGE, Deck Lower Panel (23-23-23)
	8	6022 983	Washer
	8	---- ---	Nut
26	1	2275 977-8	MOULDING PACKAGE, Quarter Panel Upper Rear (23-23-39)
	6	6022 983	Washer
	6	---- ---	Nut
27	2	2189 687	ORNAMENT, Quarter Outside Panel Crown (23-34-334)
	4	152 260	Nut and Seal
28	2	2275 971	MOULDING PACKAGE, Quarter Panel Upper Front (23-23-39)
	14	6022 983	Washer
	14	---- ---	Nut
29	1	2196 820-1	MOULDING PACKAGE, Quarter Panel Wheel Opening (23-23-39)
	10	9413 197	Screw
30	1	2275 998-9	MOULDING PACKAGE, Quarter Panel Lower Rear (23-23-39)
	6	2189 874	Washer
	4	6000 505	Clip 2 151 497 Nut
31	1	2196 818-9	DEFLECTOR PACKAGE, Quarter Panel Stone (23-34-240)
	6	9414 080	Screw
32	1	2298 691-2	MOULDING PACKAGE, Quarter Panel Lower Front (23-23-39)
	4	6000 832	Retainer
	4	6001 251	Clip 4 151 497 Nut
33	1	2275 107-8	MOULDING PACKAGE, Body Side Sill (23-23-2)
	8	6000 938	Clip
	16	9414 586	Screw 2 9417 515 Screw
34	2	2298 685	MOULDING PACKAGE, Door (23-23-32)
	8	6001 251	Clip
	4	6000 832	Retainer 4 151 497 Nut

Part Type Code is Indicated in Parentheses **19x9279B**

MOULDINGS - IMPERIAL CROWN SY1(M) CONVERTIBLE COUPE

MyMopar.com

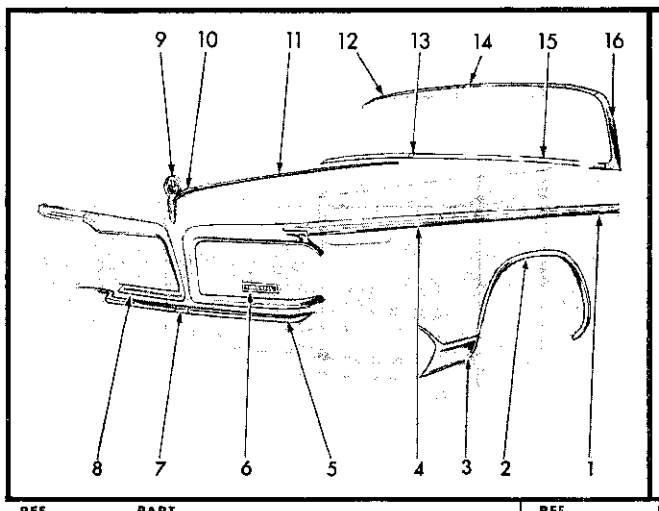

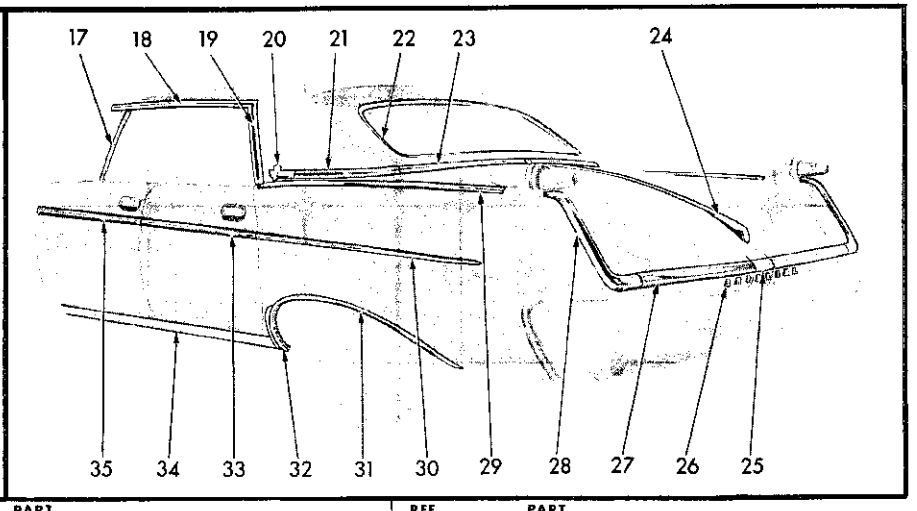

REF. NO.	QTY	PART NUMBER	DESCRIPTION
1	1	2298 695-6	MOULDING PACKAGE, Fender Side Upper (12-15-2)
	12	6001 251	Clip
	4	6001 252	Fastener
	2	6001 060	Retainer
	2	2252 081	Spacer
	4	151 497	Nut
2	1	2240 940-1	MOULDING, Wheel Opening (12-15-2)
	14	9413 197	Screw
3	1	2240 938-9	MOULDING PACKAGE, Fender Front Lower (12-15-2)
	2	1904 121	Clip
	6	6022 506	Screw
	8	120 375	Nut
4	1	2298 706-7	MOULDING PACKAGE, Fender Front (12-15-2)
	12	151 497	Nut
5	1	2275 922-3	MOULDING, Grille Lower Panel (7-16-36)
6	1	2099 636	NAME PLATE, Radiator Grille (7-16-61)
7	1	2275 192	CAP, Radiator Grille Low Panel Moulding (7-16-44)
8	1	2099 634-5	FRAME, Radiator Grille (7-16-36)
9	1	2099 852	ORNAMENT PACKAGE, Fender Top Panel (12-15-21)
10	*	2417 203	TAPE, Fender Top Panel Ornament (12-15-33)
11	1	2275 987	MOULDING PACKAGE, Hood Top Panel (15-25-2)
	7	9415 250	Nut
12	1	2298 550-1	MOULDING PACKAGE, Windshield Opening Upper (23-23-65)
	4	6000 858	Retainer 6 1961 286 Washer
	2	6006 338	Retainer 6 ---- --- Nut
13	1	1692 191	CAP, Windshield Moulding Lower Center Joint (23-23-66)
14	1	1750 754	CAP, Windshield Upper Moulding Center Joint (23-23-66)
15	1	2196 477-8	MOULDING PACKAGE, Windshield Opening Lower (23-23-65)
	20	6006 200	Clip

All Packages Include Attaching Parts

REF. NO.	QTY	PART NUMBER	DESCRIPTION
16	1	2196 472-3	MOULDING PACKAGE, Windshield Opening Side (23-23-65)
	8	6000 000	Screw
17	2	1751 323	MOULDING, Front Door Vent Wing Division Channel, Outer (23-23-36)
	2	1751 325	MOULDING, Front Door Vent Wing Division Channel, Inner (23-23-36)
18	1	2189 988-9	MOULDING, Roof Side Drain Trough (23-59-61)
19	1	2275 904-5	MOULDING PACKAGE, Roof Side (23-23-42)
	4	1961 286	Washer
	4	9411 618	Nut
20	2	2240 950	MEDALLION PACKAGE, Roof Panel Side (23-34-334)
	4	6022 052	Washer
	4	6000 829	Clip
21	1	2275 312-3	EXTENSION MOULDING PACKAGE, Roof Outside Panel Belt (23-23-42)
	2	161 430	Screw
	2	152 260	Nut
22	1	1961 516-7	MOULDING, Rear Window Outside (23-23-52)
23	1	2275 314-5	MOULDING PACKAGE, Roof Panel Outside Belt (23-23-42)
	2	6001 205	Retainer
	2	---- ---	Nut 2 6022 850 Sealer
	4	6001 208	Clip 2 152 260 Nut and Seal
	4	161 871	Screw 2 161 430 Screw
	4	6022 862	Sealer 8 6001 204 Clip and Seal
24	1	2275 906	MOULDING PACKAGE, Deck Lid, w/Lock Cylinder Cover (23-23-30)
	1	9416 929	Screw
	1	151 497	Nut and Seal
	4	6006 263	Nut and Seal
25	1	2189 606	MOULDING, Fuel Filler Door (23-23-23)
	2	---- ---	Screw
26	2	2252 161	LETTERS, Deck Opening Lower Panel, I (23-34-184)
	1	2252 162	M
	1	2252 163	P
	1	2189 611	E
	1	2189 612	R

REF. NO.	QTY	PART NUMBER	DESCRIPTION
	1	2252 164	A
	1	2252 165	L
	*	6006 468	Clip
27	1	2298 582-3	MOULDING PACKAGE, Deck Opening Lower Panel (23-23-23)
	8	6022 983	Washer
	8	---- ---	Nut
28	1	2275 977-8	MOULDING PACKAGE, Quarter Panel Peak Rear (23-23-39)
	6	6022 983	Washer
	6	---- ---	Nut
29	2	2275 971	MOULDING PACKAGE, Quarter Panel Peak Front (23-23-39)
	7	6022 983	Washer
	7	---- ---	Nut
30	1	2275 996-7	MOULDING PACKAGE, Quarter Panel Lower (23-23-39)
	6	2189 874	Washer
	4	6000 505	Clip
	2	151 497	Nut
31	1	2196 820-1	MOULDING PACKAGE, Quarter Panel Wheel Opening (23-23-39)
	10	---- ---	Screw
32	1	2196 818-9	DEFLECTOR PACKAGE, Quarter Panel Stone (23-34-240)
	6	9414 080	Screw
33	1	2298 689-90	MOULDING PACKAGE, Rear Door (23-23-33)
	3	6001 251	Clip
	4	6000 832	Retainer
	4	151 497	Nut
34	1	2275 107-8	MOULDING PACKAGE, Body Side Sill (23-23-2)
	8	6000 938	Clip
	16	9414 586	Screw
	2	9417 515	Screw
35	2	2298 687	MOULDING PACKAGE, Front Door (23-23-32)
	6	6001 251	Clip
	4	6000 832	Retainer
	4	151 497	Nut

Part Type Code is Indicated in Parentheses **19x9156B**

MOULDINGS - IMPERIAL LE BARON SY1(H) SPECIAL 4 DOOR SEDAN

MyMopar.com

CODE	PART NAME AND DESCRIPTION	PER CAR	VALIANT LANCER	PLYMOUTH DODGE	CHRYSLER IMPERIAL

NOTES

★ Indicates use as required.
⊟ Indicates parts not listed in any previous parts book.

Printed in U.S.A.
Prices and specifications subject to change without notice.

MyMopar.com

CODE	PART NAME AND DESCRIPTION	PER CAR	VALIANT LANCER	PLYMOUTH DODGE	CHRYSLER IMPERIAL
23-02-0	**ASH RECEIVERS**				
23-02-1	RECEIVER, Front Seat Back Ash				
	SD3 Use w/o Lighter	★	2162 566	2080 184	2080 184
	SD3 Complete, use w/o Lighter. . .	★	2162 596	2080 641	2080 641
	Except SD3 w/Face PLATE	1	---- ---	2086 611	
	All Use w/Lighter	1	---- ---	---- ---	*2080 181
	All Complete, use w/Lighter . . .	1	---- ---	---- ---	2080 639
	Sp. Cl. Cp., Cv. Cp., SC2-300H				
	Complete	2	---- ---	---- ---	2162 596
	SCREW	4	---- ---	---- ---	125 978
	Sp. Cl. Cp., Cv. Cp., C2	2	---- ---	---- ---	2162 566
23-02-11	HOUSING, Front Seat Back Ash Receiver				
	Except SD3	1	---- ---	1902 375	
23-02-12	SNUFFER, Seat Back Ash Receiver				
	Front	1	---- ---	1902 374	
	Sub. Third	1	---- ---	1902 374	1902 374
23-02-18	RECEIVER, Instrument Panel Ash				
	SC1, SC2, SC3, except SD3	1	*2083 099	2162 721	1901 739
	SD3, SYL, SYM, SYH	1	---- ---	1901 938	1901 826
	SC1, SC2, SC3 Complete	1	*2083 100	---- ---	1839 704
23-02-19	HOUSING, Instrument Panel Ash Receiver				
	Except SD3	1	2083 021	2162 685	
	SD3	1		1901 944	
23-02-21	CATCH, Instrument Panel Ash Receiver Pivot				
	All	1	*2083 033		
23-02-40	DOOR and HOUSING, Instrument Panel Ash Receiver				
	SYL, SYM, SYH	1	---- ---	---- ---	1900 878
23-02-42	HANDLE, Instrument Panel Ash Receiver				
	SC1, SC2, SC3	1	---- ---	---- ---	1698 140
23-02-43	SPRING, Instrument Panel Ash Receiver Door				
	SC1, SC2, SC3 Right	1	---- ---	---- ---	2080 234
	SYL, SYM, SYH	1	---- ---	---- ---	1901 844-5
23-02-62	RECEIVER, Rear Quarter Ash				
	Sp. Cl. Cp., Cv. Cp., SYL, SYM	2	---- ---	---- ---	2080 413
23-02-78	RECEIVER, Rear Door Ash				
	SYL, SYM, SYH	2	---- ---	---- ---	2080 413
23-02-81	RETAINER, Rear Floor Tunnel Console Ash Receiver				
	SP2-P, SD2-P, SC2-300H	1	---- ---	2086 114	2086 114
23-02-82	SPRING, Floor Console Front Ash Receiver				
	SP2-P, SD2-P	1	---- ---	2292 503	
	SPRING, Rear Door and Quarter Arm Rest Ash Receiver Lid				
	SYL, SYM, SYH	2	---- ---	---- ---	2085 485
23-02-89	BEZEL and LID, Rear Door and Quarter Arm Rest Ash Receiver				
	SP. 4 D., SYL, SYM, SYH	1	---- ---	---- ---	2085 514-5
	Sp. Cl. Cp., Cv. Cp., SYL, SYM	1	---- ---	---- ---	2080 670-1
23-02-105	RECEIVER, Floor Tunnel Console Ash				
	SP2-P, SD2-P, SC2-300H Front	1	---- ---	1607 897	2161 028
	SP2-P, SD2-P, SC2-300H w/Face Plate, Rear	1	---- ---	2161 115	2161 115

★ Indicates use as required.
⊟ Indicates parts not listed in any previous parts book.
Right and left part numbers are on same line, first number is right, second number is left.
* Indicates change or addition.

Printed in U.S.A.
Prices and specifications subject to change without notice.
March 8, 1963 Supersedes Sept. 15, 1961.

MyMopar.com

CODE	PART NAME AND DESCRIPTION	PER CAR	VALIANT LANCER	PLYMOUTH DODGE	CHRYSLER IMPERIAL
23-02-0	**ASH RECEIVERS - Cont'd**				
23-02-107	BEZEL, Floor Tunnel Console Ash Receiver				
	SP2-P, SD2-P Front	1	---- ---	1623 104	
	SP2-P, SD2-P, SC2-300H Rear	1	---- ---	2161 035	2161 035
23-02-145	RECEIVER, Third Seat Ash				
	Sub.	1	---- ---	2086 611	2086 611
23-02-149	BRACKET, Third Seat Ash Receiver Mounting				
	Sub.	1	---- ---	2080 596	2080 596
23-02-150	HOUSING, Third Seat Ash Receiver				
	Sub.	1	---- ---	1902 375	1902 375
23-04-0	**FLOOR BOARDS**				
23-04-2	COVER, Floor Pan Steering Column Opening				
	SYL, SYM, SYH	1	---- ---	---- ---	1878 145
23-04-117	BOLT and RETAINER, Steering Column Opening Cover				
	SYL, SYM, SYH	3	---- ---	---- ---	1475 900
23-04-205	SKID STRIP, Center Floor Pan Third Seat Back Support				
	Sub.	2	---- ---	*2251 868	
	MOULDING, Rear Floor Pan Cover Panel				
	Sub.	1	---- ---	2254 668	
	SCREW	16	---- ---	9414 711	
23-04-229	COVER, Spare Tire, Plastic				
	Except Sub. Hardboard	1	⊟2419 361		
	Sub. Black	1	---- ---	2170 087	2170 087
	PANEL, Spare Tire				
	SYL, SYM, SYH	1	---- ---	---- ---	1708 248
23-04-241	HOUSING, Fuel Tank Filler Tube				
	Except Sub.	1	---- ---	2253 213	
	Sub., SD3 w/COLLAR	1	---- ---	1960 501	1960 501
	SYL, SYM, SYH Upper	1	---- ---	---- ---	1877 354
	Lower	1	---- ---	---- ---	1877 353
23-04-249	SEAL, Fuel Tank Filler Tube	1	2242 359		
	Sub., SD3	1	---- ---	1833 900	1833 900
	SYL, SYM, SYH Housing	1	---- ---	---- ---	1877 488
	To Door Housing	1	---- ---	---- ---	1877 516
23-04-250	RETAINER, Fuel Tank Filler Tube Seal				
	SYL, SYM, SYH	1	---- ---	---- ---	1877 355
23-06-0	**GLOVE BOX**				
23-06-4	BOX, Glove				
	SC1, SC2, SC3, except SD3	1	*2083 096	*2292 242	*2292 289
	SD3, SYL, SYM, SYH	1	---- ---	1901 784	1901 808
	Except SD3 Use w/Air Cond.	1	---- ---	2162 682	
	SD3 Use w/Air Cond.	1	---- ---	2161 268	
23-06-10	DOOR, Glove Box				
	SC1, SC2, except SD3	1	---- ---	*2162 683	*1901 734
	SD3, SYL, SYM, SYH	1	---- ---	1901 931	1839 569
	SC1, SC3 w/o Holes	1	---- ---	---- ---	*2080 459
23-06-12	PLATE, Glove Box Door Inner				
	SYL, SYM, SYH	1	---- ---	---- ---	1839 568

★ Indicates use as required.
⊟ Indicates parts not listed in any previous parts book.
March 8, 1963 Supersedes May 1, 1962.

Printed in U.S.A.
Prices and specifications subject to change without notice.
Right and left part numbers are on same line, first number is right, second number is left.
* Indicates change or addition.

MyMopar.com

CODE	PART NAME AND DESCRIPTION	PER CAR	VALIANT LANCER	PLYMOUTH DODGE	CHRYSLER IMPERIAL
23-06-0	**GLOVE BOX - Cont'd**				
23-06-13	ARM or STOP, Glove Box Door Check				
	SC1, SC2, SC3, except SD3	1	---- ---	*2162 693	*1901 764
	SD3, SYL, SYM, SYH	1	---- ---	*1901 790	*1902 176-7
23-06-14	BUMPER, Glove Box Door				
	SC1, SC2, SC3	★	---- ---	2080 201	2080 201
	SYL, SYM, SYH	2	729 152	---- ---	2080 480
23-06-15	CATCH, Glove Box Door Lock				
	SC1, SC2, SC3	1	2082 219	2162 692	6008 016
	SCREW	2	* 161 895		
	NUT	1	* 445 247		
	SD3, SYL, SYM, SYH	1	---- ---	*2161 217	*2161 469
23-06-16	BRACKET, Glove Box Door Lock Catch				
	SC1, SC2, SC3	1	---- ---	---- ---	1685 782
23-06-17	FACE PLATE, Glove Box Door				
	SD3	1	---- ---	*2161 569	
23-06-21	HINGE, Glove Box Door				
	SC1, SC2, SC3, except SD3	1	*2083 061	*2162 886	*1901 727
	SCREW	★	164 042	---- ---	1901 691
	SD3, SYL, SYM, SYH	1	---- ---	*2161 621	*1902 201
23-06-22	SPRING, Glove Box Door Release	1	⊟2217 312		
23-06-28	LATCH, Glove Box Door				
	w/o Lock	1	2161 182		
	SC1, SC2, SC3, except SD3				
	w/LOCK	1	---- ---	*1830 415	*1830 415
	SD3, SYL, SYM, SYH				
	w/LOCK	1	---- ---	*2080 321	*2086 051
23-06-41	GROMMET, Glove Box Door Check Arm				
	SD3	★	---- ---	*2080 488	*2080 488
23-06-49	MOULDING, Glove Box Door				
	SD3	1	---- ---	*1902 313	
23-06-53	NAME PLATE, Glove Box Door				
	SD3 DODGE	1	---- ---	*2161 540	
	NUT	2	---- ---	*9415 312	
	Newport	1	---- ---	---- ---	2162 301
	300	1	---- ---	---- ---	2162 302
23-07-0	**BRACKETS AND REINFORCEMENTS**				
23-07-168	REINFORCEMENT, Instrument Panel Lower				
	SYL, SYM, SYH	1	---- ---	---- ---	1839 570
23-07-169	BRACKET, Instrument Panel Lower Reinforcement to Pillar				
	SYL, SYM, SYH	1	---- ---	---- ---	2080 652-3
23-08-0	**BUMPERS AND STRIKERS**				
23-08-12	BUMPER or WEDGE, Door				
	Sp. Cl. Cp., Cv. Cp., SC1, SC2, SC3				
	Door	2	---- ---	* 989 513	* 989 513
	Body	2	---- ---	*1544 841	*1544 841
	Sp. Cl. Cp., Cv. Cp., SYL, SYM, SYH				
	Door	1	---- ---	---- ---	* 989 513
	Body	2	---- ---	---- ---	*1750 995

★ Indicates use as required.
⊟ Indicates parts not listed in any previous parts book.
Right and left part numbers are on same line, first number is right, second number is left.
* Indicates change or addition.

Printed in U.S.A.
Prices and specifications subject to change without notice.
May 1, 1962 Supersedes Nov. 30, 1961.

MyMopar.com

CODE	PART NAME AND DESCRIPTION	PER CAR	VALIANT LANCER	PLYMOUTH DODGE	CHRYSLER IMPERIAL
23-08-0 BUMPERS AND STRIKERS - Cont'd					
23-08-12	BUMPER OR WEDGE - Cont'd				
	4D., Sub. Front Upper	2	2082 641		
	Rear	2	1954 397		
	Sp. Cl. Cp., Cv. Cp. Upper	2	1954 393		
	Lower	2	1954 397		
	Except SD3	★	---- ---	2167 324	
	4D., Sp. 4D., Sub., SD3, SC1, SC2, SC3				
	Front	4	---- ---	1883 740	1883 740
	Rear	4	---- ---	1883 740	1883 740
	Sp. Cl. Cp., Cv. Cp., SD3, SC1, SC2	4	---- ---	1954 393	1954 393
	Sp. 4D., SYL, SYM, SYH				
	Front	4	---- ---	---- ---	2188 470
	Rear	4	---- ---	---- ---	2093 950
	Sp. Cl. Cp., Cv. Cp., SYL, SYM	4	---- ---	---- ---	2093 950
23-08-13	STOP, Front Door Trim Panel Bumper				
	Sp. 4 D., SYL, SYM, SYH				
	Chrome	4	---- ---	---- ---	2080 982
	SCREW	4	---- ---	---- ---	161 378
23-08-54	SPACER, Door Lock Striker				
	Front, Thick	★	2081 542		
	Thin	★	2081 543	1954 717	1954 717
	Rear, Thin	★	1954 717	1954 717	1954 717
23-08-60	STRIKER, Door Lock				
	Front	1	2195 766-7	1954 234-5	1954 234-5
	Rear	1	1954 234-5	1954 234-5	1954 234-5
23-08-63	PLATE, Front Door Lock Striker Cover				
	4 D., Sub.	2	2082 609		
	Sp. Cl. Cp., Cl. Sed.	2	2195 765		
23-08-66	RETAINER, Rear Door Lock Striker Tapping Plate	2	---- ---	2252 172	
23-08-75	PLATE, Door Lock Striker Tapping				
	Front	2	2195 787	1952 214	1952 214
	Rear	2	1952 214	1952 214	1952 214
23-08-76	SHIELD or GUARD, Front Door Lock Striker				
	4 D., Sp. 4 D. Sub., except SD3	1	*2082 520-1	*2428 166	
	SCREW	2	---- ---	*9414 746	
23-09-0 GLASS CHANNELS					
23-09-2	ROLLER, Rear Door Glass Lower Channel				
	4D., Sub., SD3 Single Groove	2	1697 607	1697 607	1697 607
23-09-9	CHANNEL, Quarter Window Glass Lower				
	NOTE: For models not listed see Part Type Code 23-64-174.				
	Cl. Sed.	1	---- ---	2167 140-1	
	Sp. Cl. Cp., Cv. Cp., SYL, SYM	1	---- ---	2216 384-5	1691 086-7
23-09-15	BRACKET, Quarter Window Guide Channel Upper Rear				
	Sp. Cl. Cp.	2	---- ---	---- ---	1750 660
23-09-17	ROLLER, Quarter Window Glass Lower Channel and Track				
	Sp. Cl. Cp., Cv. Cp., SD3, SC1, SC2	★	---- ---	2165 992	2165 992
	Cv. Cp., SD3, SC1, SC2	2	---- ---	1697 607	1697 607

★ Indicates use as required.
⊟ Indicates parts not listed in any previous parts book.
March 8, 1963 Supersedes May 1, 1962.

Printed in U.S.A.
Prices and specifications subject to change without notice.
Right and left part numbers are on same line, first number is right, second number is left.
* Indicates change or addition.

MyMopar.com

CODE	PART NAME AND DESCRIPTION	PER CAR	VALIANT LANCER	PLYMOUTH DODGE	CHRYSLER IMPERIAL
23-09-0	**GLASS CHANNELS - Cont'd**				
23-09-17	ROLLER, Rear Door Window Glass Lower Channel and Track				
	Sp. 4 D., Sub., SC1, SC2, SC3	6	---- ---	---- ---	2165 992
	SLIDE, Quarter Window Glass Lower Channel Guide, Nylon				
	Sp. Cl. Cp., Cv. Cp., SYL, SYM	8	---- ---	---- ---	1690 950
23-09-33	BAR, Quarter Window Division, w/BRACKET				
	Cl. Sed.	1	2195 618-9		
	Sp. Cl. Cp. w/CHANNEL	1	2242 710-1		
23-09-35	CHANNEL, Quarter Window Glass Run, w/BRACKET				
	Cl. Sed.	1	2195 740-1		
	STUD, Adjusting	2	1950 830		
23-09-47	SUPPORT, Front Door Glass Rear Run Channel				
	Sp. 4D., Sp. Cl. Cp., Cv. Cp., except SD3				
	Upper	2	---- ---	2216 485	
	Lower	2	---- ---	2216 111	
	SD3, SC1, SC2, SC3, except 4D.				
	Upper	2	---- ---	1963 732	1963 732
	Lower	2	---- ---	1954 446	1954 446
23-09-51	CHANNEL, Front Door Window Glass Guide, w/BRACKET				
	Sp. Cl. Cp., Cl. Sed.	1	2216 794-5		
	STUD, Adjusting	2	6023 231		
	CHANNEL, Front Door Window Glass Rear Run				
	Sp. 4D., Sp. Cl. Cp., Cv. Cp., except SD3	1	---- ---	2166 936-7	
	SD3, SC1, SC2, SC3, except 4D. w/RUN	1	---- ---	1950 812-3	1950 812-3
	SYL, SYM, SYH	1	---- ---	---- ---	1961 382-3
23-09-52	CHANNEL, Front Door Window Glass Lower				
	NOTE: For models not listed see Part Type Code 23-64-265.				
	4D., Sub., except SD3	1	2082 264-5	2167 780-1	
	Cl. Sed.	1	---- ---	2166 916-7	
	Sp. 4 D., SYL, SYM, SYH	1	---- ---	---- ---	1750 578-9
	4D., SD3, SC1, SC3	1	---- ---	2165 712-3	2165 712-3
	Sp. Cl. Cp., Cv. Cp., SYL, SYM	1	---- ---	---- ---	1751 056-7
23-09-56	CHANNEL, Rear Door Window Glass Run				
	Sp. 4 D., SYL, SYM, SYH				
	Front	1	---- ---	---- ---	1961 378-9
	Rear	1	---- ---	---- ---	1961 380-1
	STUD Upper	2	---- ---	---- ---	*6006 409
	Lower	2	---- ---	---- ---	*6006 296
23-09-58	CHANNEL, Rear Door Window Glass Lower				
	NOTE: For models not listed see Part Type Code 23-64-265.				
	4D., SC1, SC2, SC3, except SD3	1	*2081 470-1	2216 266-7	1950 648-9
	Sub.	1	2081 470-1	2216 266-7	
	Sp. 4 D., SYL, SYM, SYH	1	---- ---	2216 100-1	1692 152-3
	4D., SD3	1	---- ---	1950 648-9	
23-09-64	CHANNEL, Tailgate Glass Lower				
	Sub., SD3	1	*2082 394	*1960 513	*1960 513
	Sub., except SD3 Bonded Type	1	---- ---	*2251 811	
	Riveted Type	1	---- ---	⊟2217 511	
	RIVET	2	---- ---	*6023 695	
23-09-67	CHANNEL, Tailgate Glass Run				
	Sub., except SD3 Upper	1	2081 725	2251 801	
	Side Upper	2	2081 146		
	Lower	1	2082 764-5	2252 152-3	
	Side Upper	1	---- ---	2251 772-3	
	Sub., SD3 Side Lower	1	---- ---	2189 354-5	2189 354-5
	w/Drive STUD	1	---- ---	2189 754-5	2189 754-5

★ Indicates use as required.
⊟ Indicates parts not listed in any previous parts book.
Right and left part numbers are on same line, first number is right, second number is left.
* Indicates change or addition.

Printed in U.S.A.
Prices and specifications subject to change without notice.
March 8, 1963 Supersedes May 1, 1962.

MyMopar.com

CODE	PART NAME AND DESCRIPTION	PER CAR	VALIANT LANCER	PLYMOUTH DODGE	CHRYSLER IMPERIAL
23-09-0	**GLASS CHANNELS - Cont'd**				
23-09-71	SEAL, Tailgate Glass Lower Channel and Bracket Sub.	2	---- ---	2254 849	
23-09-75	CHANNEL, Quarter Window Guide				
	Sp. Cl. Cp.	1	2195 726-7		
	Sp. Cl. Cp., Cv. Cp., SYL, SYM				
	Front	1	---- ---	---- ---	1961 392-3
	Rear	1	---- ---	---- ---	1961 394-5
23-10-0	**DOOR CHECK**				
23-10-1	ARM, Door Check Front	2	2081 340		
	SYL, SYM, SYH Rear	2	2081 456	---- ---	1860 829
23-10-2	BRACKET, Rear Door Check Arm				
	SYL, SYM, SYH	2	---- ---	---- ---	1750 686
23-10-17	GUIDE, Door Check Arm				
	Front	2	1758 076		
	SYL, SYM, SYH Rear	2	1758 076	---- ---	1476 900
	All w/BRACKET, Rear	2	2081 622		
23-10-18	SPRING, Front Door Check Arm Tension				
	SYL, SYM, SYH	2	---- ---	---- ---	*1691 275
23-11-0	**DOORS**				
23-11-1	SHELL, Front Door				
	4 D., Sub., SL	1	2253 284-5		
	Cl. Sed., SL	1	2253 286-7		
	4D., Sub., SV, except SD3	1	1919 100-1	2253 058-9	
	Sp. 4D., SYL, SYM, SYH, except SD3, SD2-P	1	---- ---	2253 060-1	1961 374-5
	Cl. Sed., SV	1	2259 158-9	2253 062-3	
	Sp. Cl. Cp., Cv. Cp., SV, SYL, SYM	1	2259 160-1	2253 778-9	1961 370-1
	4D., SD3, SC1, SC2, SC3	1	---- ---	1964 118-9	1964 118-9
	SP. Cl. Cp., Cv. Cp., SL, SD3, SC1, SC2	1	*2253 288-9	*1964 124-5	*1964 124-5
	Sp. 4D., Sub., SD3, SC1, SC2, SC3	1	---- ---	2165 326-7	2165 326-7
	SP. 4 D., SD2-P	1	---- ---	*2255 932-3	
23-11-2	DOOR, Front, Trimmed, Includes HARDWARE and GLASS. All Codes.				

NOTE: Door assemblies complete, will no longer be listed by part number in the parts books. Door assemblies complete will be available during the production run of the car model and will be furnished on special order only. The vehicle SERIAL NUMBER must be noted on the order.

23-11-3	SHELL, Rear Door				
	4D., Sub., except SD3	1	1919 102-3	2253 038-9	
	Sp. 4D., SYL, SYM, SYH, except SD3	1	---- ---	2253 044-5	1961 404-5
	4D., SD3, SC1, SC2, SC3	1	---- ---	1964 130-1	1964 130-1
	Sp. 4D., Sub., SD3, SC1, SC2, SC3	1	---- ---	1964 136-7	1964 136-7
23-11-4	DOOR, Rear, Trimmed, Includes HARDWARE and GLASS. All Codes.				

NOTE: Door assemblies complete, will no longer be listed by part number in the parts books. Door assemblies complete will be available during the production run of the car model and will be furnished on special order only. The vehicle SERIAL NUMBER must be noted on the order.

23-11-19	COVER, Rear Door Inside Panel Upper Front SP. 4 D.	1	---- ---	2216 286-7	
23-11-21	NAME PLATE, Door				

NOTE: See Exterior Moulding Illustration in Front of Group 23 Body

MyMopar.com

CODE	PART NAME AND DESCRIPTION	PER CAR	VALIANT LANCER	PLYMOUTH DODGE	CHRYSLER IMPERIAL
23-13-0	**SAFE-T-MATIC DOOR LOCKS**				
	NOTE: See Illustration in Front of Group.				
23-14-0	**DOOR REGULATORS AND REMOTE CONTROL HANDLES**				
23-14-10	HANDLE, Door Outside				
	Except SD3 Front	1	2242 902-3	2167 408-9	1961 600-1
	Rear	1	2242 902-3	2167 408-9	1961 606-7
	SD3 Front	1	---- ---	* 961 600-1	
	Rear	1	---- ---	1961 606-7	
23-14-14	CLAMP, Door Outside Handle Attaching	★	2082 511		
23-14-18	HANDLE, Door Window Regulator				
	Except SD3	★	2082 891	1952 818	1900 870
	SD3	★	---- ---	1900 870	
23-14-19	ESCUTCHEON, Door and Quarter Window Regulator Handle	★	---- ---	1954 124	
	SD3, use w/1900 870 and 2085 252 Handles	★	---- ---	1900 871	1900 871
	ESCUTCHEON, Door Remote Control Handle				
	SP-H, SP-P, SD-H, SD-P	★	---- ---	2192 685	
	ESCUTCHEON, Window Regulator Handle				
	SD3, SC1, SC2, SC3	★	---- ---	---- ---	*2192 685
23-14-21	SPRING, Regulator and Remote Control Handle				
	SC1, SC2, SC3 Red	★	*1695 431	*1695 431	*1695 431
	Except SD3 Black	★	---- ---	⊟2252 160	
	SYL	★	---- ---	---- ---	2086 036
23-14-23	CLIP, Regulator and Remote Control Handle	★	1602 532	1602 532	1602 532
23-14-24	SPACER, Window Regulator Handle				
	NOTE: For Models not Shown, see Part Type Code 23-14-19.				
	SD3	★	1684 831	1900 872	1900 872
	SPACER, Remote Control Handle				
	NOTE: For Models not Shown see Part Type Code 23-14-19.				
	Except SP-H, SP-P, SD-H, SD-P, SD3	★	1684 831	2166 751	
	SD3, SC1, SC2, SC3	★	---- ---	2299 618	2299 618
23-14-25	COVER, Door Remote Control Handle Access Hole				
	Except SD3	★	---- ---	*1952 955	
23-14-27	HANDLE, Door Remote Control				
	SP1-H, SP2-H, SP2-P, SD1-H, SD2-H, SD2-P, SC1, SC2, except SD3	★	1593 022	2189 756-7	1954 570-1
	All w/CLIP	★	2082 385		
	Except SP1-H, SP2-H, SD1-H, SD2-H, SD3	★	---- ---	2166 752	
	NUT	★	---- ---	6022 838	
	SC3	★	---- ---	---- ---	1900 860-1
	SD3, SYL, SYM, SYH	★	---- ---	1954 570-1	1900 856-7
23-14-39	HANDLE, Front Door Vent Wing				
	NOTE: See Part Type Code 23-14-53.				
23-14-41	SHAFT, Front Door Vent Wing Handle				
	Except SD3	2	---- ---	2167 634	
	WASHER	2	---- ---	6022 858	
	SCREW	2	---- ---	6022 988	
23-14-47	CATCH, Front Door Vent Wing Handle				
	Except Sp. Cl. Cp	1	2081 298-9		
	Sp. Cl. Cp.	1	2195 810-1		
	SYL, SYM	1	---- ---	---- ---	2093 828-9

★ Indicates use as required.
⊟ Indicates parts not listed in any previous parts book.
Right and left part numbers are on same line, first number is right, second number is left.
* Indicates change or addition.

Printed in U.S.A.
Prices and specifications subject to change without notice.

March 8, 1963 Supersedes May 1, 1962.

MyMopar.com

CODE	PART NAME AND DESCRIPTION	PER CAR	VALIANT LANCER	PLYMOUTH DODGE	CHRYSLER IMPERIAL
23-14-0	**DOOR REGULATORS AND REMOTE CONTROL HANDLES - Cont'd**				
23-14-51	GROMMET, Door Remote Control Handle, w/CLIP				
	SC3	★	---- ---	---- ---	2085 899
	SYL, SYM, SYH	★	---- ---	---- ---	2085 862
23-14-52	PIN, Front Door Vent Wing Handle to Shaft				
	Except SD3	2	6000 116	9418 006	6000 116
	SD3	2	---- ---	6000 116	
23-14-53	HANDLE PACKAGE, Front Door Vent Wing				
	SC1, SC2, SC3	1	2259 214-5	2299 433-4	2167 916-7
	SYL, SYM, SYH	1	---- ---	---- ---	1954 110-1
23-14-79	HANDLE, Quarter Window Regulator				
	Cl. Sed., Sp. Cl. Cp., Cv. Cp., except SD3	2	2082 891	1952 818	2085 252
	SD3	2	---- ---	2085 252	
23-14-147	SEAL, Door Outside Handle	★	2299 687		
	To Front	★	---- ---	2216 289	
	To Rear	★	---- ---	2252 040-1	
23-14-153	BUMPER, Door Outside Handle				
	Except SD3	★	---- ---	*2216 279	
	SD3	★	---- ---	1651 493	1651 493
	SD3 Center	★	---- ---	1707 384	1707 384
23-15-0	**DOOR HINGE**				
23-15-1	HINGE, Door Upper				
	SC1, SC2, SC3, except SD3				
	Front	1	2081 320-1	2216 458-9	1882 028-9
	4D., SP. 4D., Sub., except SD3				
	Rear	1	2081 450-1	2166 370-1	
	Sp. 4D., Sub., SD3, SC1, SC2, SC3				
	Rear	1	---- ---	1882 400-1	1882 400-1
	4 D., SD3, SC1, SC2, SC3				
	Rear	1	---- ---	*1950 610-1	*1950 610-1
	SD3, SYL, SYM, SYH Front	1	---- ---	1882 028-9	2189 384-5
	SYL, SYM, SYH Rear, Right	1	---- ---	---- ---	1651 400
	Left	1	---- ---	---- ---	1750 565
23-15-3	HINGE, Door Lower				
	SC1, SC2, SC3, except SD3				
	Front	1	2082 724-5	2188 554-5	1882 048-9
	4D., SC1, SC2, SC3, except SD3				
	Rear	1	2081 444-5	2216 450-1	2166 452-3
	4D., SD3 Rear	1	---- ---	2166 452-3	
	SP. 4D., Sub., SD3 Rear	1	---- ---	2166 466-7	
	Sp. 4D., Sub., SC1, SC2, SC3, except SD3				
	Rear	1	2081 444-5	2216 450-1	2166 466-7
	SD3, SYL, SYM, SYH				
	Front	1	---- ---	1882 048-9	1651 396-7
23-15-6	ROLLER, Door Hinge Integral Check				
	SC1, SC2, SC3, except SD3				
	Front Upper	2	---- ---	2216 443	1883 802
	Rear Lower	2	---- ---	2216 443	1882 967
	SD3 Front Upper	2	---- ---	1883 802	
	Rear Lower	2	---- ---	1882 967	
23-15-7	SHIM, Rear Door Upper Hinge				
	SD3, SC1, SC2, SC3	★	2216 511	1950 670	1950 670
	SYL, SYM, SYH	★	---- ---	---- ---	2189 408
23-15-9	PIN, Door Hinge				
	SYL, SYM, SYH, except SD3				
	Front, Upper	2	2259 188	6022 891	*6006 043
	Lower	2	2081 326	6000 209	*6006 043

★ Indicates use as required.
⊟ Indicates parts not listed in any previous parts book.

Printed in U.S.A.
Prices and specifications subject to change without notice.
Right and left part numbers are on same line, first number is right, second number is left.
* Indicates change or addition.

MyMopar.com

CODE	PART NAME AND DESCRIPTION	PER CAR	VALIANT LANCER	PLYMOUTH DODGE	CHRYSLER IMPERIAL
23-15-0	**DOOR HINGE - Cont'd**				
23-15-9	PIN - Cont'd				
	Rear, Upper	2	2081 596	6022 855	6006 047
	Lower	2	2081 597	6022 891	6006 047
	SD3, SC1, SC2, SC3 Upper	★	---- ---	1882 053	1882 053
	Lower	★	---- ---	1882 965	1882 965
	PIN, Door Hinge Check				
	SD3, SC1, SC2, SC3 Upper	★	---- ---	1882 054	1882 054
	Lower	★	---- ---	1882 964	1882 964
23-15-11	RING, Door Hinge Integral Check Roller Retainer				
	SD3, SC1, SC2, SC3 Front	2	---- ---	1884 405	1884 405
	Rear	2	---- ---	1882 961	1882 961
23-15-13	PLATE, Rear Door Hinge Tapping				
	Upper	2	---- ---	2166 969	
	PLATE, Front Pillar Door Hinge Tapping				
	SYL, SYM, SYH	4	---- ---	---- ---	6006 086
23-15-14	SPRING, Door Hinge Integral Check Pin				
	SD3, SC1, SC2, SC3 Front	★	---- ---	1882 055	1882 055
	Rear	★	---- ---	2166 462	2166 462
23-15-17	SPACER, Front Door Upper Hinge				
	SD3, SC1, SC2, SC3	4	---- ---	1909 975	1909 975
	SPACER, Rear Door Hinge Integral Check Pin				
	SD3, SC1, SC2, SC3	2	---- ---	1950 559	1950 559
23-15-21	RETAINER, Center Pillar Rear Door Hinge Tapping Plate				
	SYL, SYM, SYH Upper	1	---- ---	---- ---	1750 602-3
	Lower	2	---- ---	---- ---	1750 484
	RETAINER, Center Pillar Rear Door Upper Hinge Seal	2	---- ---	2254 799	
23-15-22	SEAL, Front Door Hinge				
	SYL, SYM, SYH	4	---- ---	---- ---	1961 262
23-15-32	RETAINER, Rear Door Lower Hinge Torsion Bar Roller Grease				
	Except SD3	2	---- ---	⊟2428 179	
23-17-0	**LOCK CYLINDER AND KEYS**				
	NOTE: For Glove Box See Part Type Code 23-06-28.				
23-17-2	CYLINDER and KEYS, Door and Ignition Lock				
	Except SD3-L	1	2161 192	2161 192	2161 503
	Taxi and Police	1	2162 503		
	SD3-L	1	---- ---	2161 503	
	CYLINDER and KEYS, Door, Ignition and Tailgate Lock				
	Sub., except SD3 Manual	1	---- ---	*2162 531	
	Sub., Police, SD3 Electric	1	---- ---	*2291 411	*2291 411
23-17-4	CYLINDER and KEYS, Deck Lid, Glove Box and Floor Console Lock				
	SP2-P	1	---- ---	2292 872	
	SD2-P	1	---- ---	2292 502	
23-17-5	CYLINDER and KEYS, Deck Lid Lock				
	SC1, SC2, SC3	1	2292 807	2292 807	2292 807
	Taxi and Police w/o Key	1	2162 595	2162 595	
	SYL, SYM, SYH	1	---- ---	---- ---	2086 050
23-17-9	GASKET, Deck Lid Lock Cylinder				
	SC1, SC2, SC3	1	2162 610	2162 610	2162 610
	SYL, SYM, SYH	1	---- ---	---- ---	2252 098
23-17-10	RETAINER, Deck Lid Lock Cylinder				
	SC1, SC2, SC3	1	2162 605	2162 605	2162 605

★ Indicates use as required.
⊟ Indicates parts not listed in any previous parts book.
Right and left part numbers are on same line, first number is right, second number is left.
* Indicates change or addition.

Printed in U.S.A.
Prices and specifications subject to change without notice.
March 8, 1963 Supersedes May 1, 1962.

MyMopar.com

CODE	PART NAME AND DESCRIPTION	PER CAR	VALIANT LANCER	PLYMOUTH DODGE	CHRYSLER IMPERIAL
23-17-0	**LOCK CYLINDER AND KEYS - Cont'd**				
23-17-11	SPRING, Deck Lid Lock Cylinder Cover SYL, SYM, SYH	1	---- ---	---- ---	2188 687
23-17-13	COVER and SPRING, Deck Lid Lock Cylinder SYL, SYM, SYH	1	---- ---	---- ---	2421 242
23-17-18	RETAINER, Rear Floor Pan Cover Lock Cylinder Sub., SD3	1	---- ---	1866 686	1866 686
23-17-21	CYLINDER and KEYS, Third Seat Back Handle Lock Sub.	1	---- ---	2292 051	
23-17-24	CYLINDER and KEYS, Door Lock (consists of 2 cylinder and 2 keys) Except SD3	1	*2161 356	*2161 356	*2086 048
23-17-28	RETAINER, Door Lock Cylinder	2	2162 351	2162 351	
23-17-49	CYLINDER and KEYS, Tailgate Lock Sub. Manual	1	2161 599	2162 536	
	Electric	1	2161 423	2161 423	2161 423
23-17-51	GASKET, Electric Tailgate Lock Cylinder Sub.	1	2076 675	1819 316	1819 316
23-17-52	RETAINER, Electric Tailgate Lock Cylinder Sub.	1	1819 317	1819 317	1819 317
23-17-66	KEY, Deck Lid and Glove Box Lock Cylinder Blank SYL, SYM, SYH	2	---- ---	---- ---	1520 798
23-17-72	CYLINDER and KEYS, Tirewell Cover Lock Sub.	1	---- ---	2292 051	2161 615
23-18-0	**DOOR LOCKS AND REMOTE CONTROLS**				
23-18-5	LOCK, Door SC1, SC2, SC3, except SD3 Front	1	2082 412-3	2167 446-7	2166 694-5
	Rear	1	2081 440-1	2167 544-5	1954 058-9
	SD3, SYL, SYM, SYH Front	1	---- ---	2166 694-5	2188 902-3
	Rear	1	---- ---	1954 058-9	2189 646-7
23-18-11	LINK, Door Lock Remote Control 4 D., Sp. 4 D., Sub. Front	2	---- ---	2252 044	
	SYL, SYM, SYH Rear	2	---- ---	2252 045	1961 717
	Sp. Cl. Cp., Cv. Cp., Cl. Sed.	2	---- ---	2252 046	
23-18-12	CLIP, Rear Door Lock Locking Control Link Except SD3	4	---- ---	*2252 058	
23-18-13	REMOTE CONTROL, Door Lock Sp. Cl. Cp., Cl. Sed.	1	2195 828-9		
	4D., Sub. Front	1	2081 316-7		
	Rear	1	2082 474-5		
	4D., Sp. 4D., Sub., SD3, SC1, SC2 Front	1	---- ---	1964 834-5	1964 834-5
	Rear	1	---- ---	1964 782-3	1964 782-3
	SC3 Front	1	---- ---	---- ---	2165 224-5
	Rear	1	---- ---	---- ---	2165 232-3
	Sp. 4 D., SYL, SYM, SYH Front	1	---- ---	---- ---	1961 748-9

★ Indicates use as required.
⊟ Indicates parts not listed in any previous parts book.
March 8, 1963 Supersedes May 1, 1962.

Printed in U.S.A.
Prices and specifications subject to change without notice.
Right and left part numbers are on same line, first number is right, second number is left.
* Indicates change or addition.

MyMopar.com

23-18-0 DOOR LOCKS AND REMOTE CONTROLS - Cont'd

CODE	PART NAME AND DESCRIPTION	PER CAR	VALIANT LANCER	PLYMOUTH DODGE	CHRYSLER IMPERIAL
23-18-13	REMOTE CONTROL - Cont'd				
	Sp. Cl. Cp., Cv. Cp., SD3, SC1, SC2	1	---- ---	*1964 836-7	*1964 836-7
	Sp. Cl. Cp., Cv. Cp., SYL, SYM	1	---- ---	---- ---	1961 750-1
	CONTROL, Door Lock Remote				
	All Front	1	---- ---	*2167 352-3	
	SYL, SYM, SYH, except SD3				
	Rear	1	---- ---	*2167 352-3	*1961 704-5
23-18-20	LINK, Door Outside Handle to Lock				
	SD3, SC1, SC2, SC3 Front	2	*2195 785	*1963 638	*1963 638
	Rear	2	2081 826	1954 910	1954 910
	4D., Sp. 4D., Sub., SYL, SYM, SYH, except SD3				
	Front	★	---- ---	*2251 848-9	*1961 752
	Rear	2	---- ---	2167 555	1961 736
	Sp. Cl. Cp., Cv. Cp., Cl. Sed., SYL, SYM, except SD3	★	---- ---	*2243 298-9	*1961 753
23-18-21	SPRING, Door Lock Remote Control Lever				
	SC1, SC2, SC3, except SD3	★	* 849 517	*2167 643	* 849 517
	SD3	★	---- ---	* 849 517	
23-18-25	CONTROL, Rear Door Lock Locking				
	SC1, SC2, SC3, except SD3	1	*2081 950-1	*2254 040-1	*1884 488-9
	SD3, SYL, SYM, SYH	1	---- ---	*1884 488-9	*1961 724-5
23-18-26	LINK or ROD, Front Door Lock to Lock Cylinder	2	2082 616		
	4D., Sp. 4D., Sub., except SD3	1	---- ---	*2167 616-7	
	Sp. Cl. Cp., Cv. Cp., Cl. Sed., except SD3	1	---- ---	*2251 876-7	
	SD3, SC1, SC2, SC3	1	---- ---	*1954 818-9	*1954 818-9
	Sp. 4 D., SYL, SYM, SYH				
	Right	1	---- ---	---- ---	1961 862
	Left	1	---- ---	---- ---	2093 412
	Sp. Cl. Cp., Cv. Cp., SYL, SYH				
	Right	1	---- ---	---- ---	1961 863
	Left	1	---- ---	---- ---	2093 413
	ROD, Door Lock Locking Control Push				
	4 D., Sp. 4 D., Sub. Front	1	---- ---	2251 836-7	
	Rear	2	---- ---	2216 427	
	Sp. Cl. Cp., Cv. Cp., Cl. Sed.	1	---- ---	2252 054-5	
	LINK, Rear Door Lock Locking Control	2	---- ---	2167 558	
	w/SLEEVE	2	---- ---	2252 053	
23-18-27	KNOB, Door Lock Locking Control				
	SC3 Rear	2	---- ---	---- ---	*2189 732
	SD3, SC1, SC2, SYL, SYM, SYH				
	Rear	2	*1952 601	*1952 601	*1952 601
	Except SD3 w/CLIP, Black	★	---- ---	*2297 075	
23-18-28	SPRING, Door Lock Actuator				
	SD3	★	*1458 246-7	*1458 246-7	*1458 246-7
23-18-29	RETAINER, Door Outside Handle to Lock				
	ALL	★	*1954 851	*1954 851	*1954 851
	CLIP, Front Door Lock Cylinder to Locking Lever				
	Except SD3	2	*2166 622	⊟2251 812	*2166 622
	SD3	2	---- ---	*2166 622	
	CLIP, Door Lock Locking Control Push Rod				
	ALL Front	2	---- ---	⊟2251 812	
	Rear	2	---- ---	⊟2251 949	
	CLIP, Door Lock Locking Control Push Rod Knob				
	Except SD3	★	---- ---	⊟2216 276	
	CLIP, Rear Door Lock Release Lever				
	SYL, SYM, SYH	2	---- ---	---- ---	*1954 851

★ Indicates use as required.
⊟ Indicates parts not listed in any previous parts book.
Right and left part numbers are on same line, first number is right, second number is left.
* Indicates change or addition.

Printed in U.S.A.
Prices and specifications subject to change without notice.
May 1, 1962 Supersedes Nov. 30, 1961.

MyMopar.com

CODE	PART NAME AND DESCRIPTION	PER CAR	VALIANT LANCER	PLYMOUTH DODGE	CHRYSLER IMPERIAL
23-18-0	**DOOR LOCKS AND REMOTE CONTROLS - Cont'd**				
23-18-40	ANTI-RATTLE, Door Remote Control Link				
	SD3, SC1, SC2, SC3	★	2083 149	1952 778	1952 778
	SYL, SYM, SYH	★	---- ---	---- ---	⊟2428 251
23-18-42	CLIP, Door Lock Remote Control Link				
	All	★	---- ---	2251 949	
23-18-54	GROMMET, Door Lock Locking Lever				
	Except SD3	★	---- ---	*2241 916	
23-18-102	RETAINER, Electric Door Lock Switch and Bezel				
	SYL, SYM, SYH	2	---- ---	---- ---	1971 478
23-18-103	SWITCH, Electric Door Lock, w/BEZEL				
	SYL, SYM, SYH	2	---- ---	---- ---	2096 398
23-18-104	SPRING, Electric Door Lock Switch Retaining				
	SYL, SYM, SYH	8	---- ---	---- ---	2096 169
23-18-106	RELAY, Electric Door Lock				
	SYL, SYM, SYH	1	---- ---	---- ---	2257 703
23-18-107	LINK, Electric Door Lock Solenoid to Lock				
	Sp. 4 D., SYL, SYM, SYH				
	Front	2	---- ---	---- ---	1972 952
	Rear	2	---- ---	---- ---	2258 898
	Sp. Cl. Cp., Cv. Cp., SYL, SYM	2	---- ---	---- ---	1972 954
23-18-112	CIRCUIT BREAKER, Electric Door Lock				
	SYL, SYM, SYH	1	---- ---	---- ---	1566 038
23-18-115	SOLENOID, Electric Door Lock, w/BRACKET				
	Sp. 4 D., SYL, SYM, SYH				
	Front	2	---- ---	---- ---	1972 940
	Rear	1	---- ---	---- ---	1972 938-9
	Sp. Cl. Cp., Cv. Cp., SYL, SYM	1	---- ---	---- ---	1972 942-3
23-18-116	SCREW and WASHER, Electric Door Lock Solenoid Mounting				
	SYL, SYM, SYH	★	---- ---	---- ---	2096 129
23-19-0	**DECK LID**				
23-19-8	LID, Deck				
	SV	1	2253 237		
	SL	1	2253 238		
	SP1, SP2, except Cv. Cp.	1	---- ---	*2425 124	
	Cv. Cp., SP2-H	1	---- ---	2167 933	
	Cv. Cp., SP-P	1	---- ---	2425 125	
	SDL, SDM, SDH, SD2-P, except Cv. Cp.	1	---- ---	2167 934	
	Cv. Cp., SD2	1	---- ---	2167 935	
	SD3, SC1, SC2, SC3	1	---- ---	2253 270	2253 270
	SYL, SYM, SYH	1	---- ---	---- ---	2253 363
23-19-21	PLUG, Deck Lid Inside Panel				
	SD3, SC1, SC2, SC3 Drain	2	---- ---	1878 752	1878 752
	SD3 Access	4	---- ---	2423 559	

★ Indicates use as required.
⊟ Indicates parts not listed in any previous parts book.
March 8, 1963 Supersedes May 1, 1962.

Printed in U.S.A.
Prices and specifications subject to change without notice.
Right and left part numbers are on same line, first number is right, second number is left.
* Indicates change or addition.

MyMopar.com

CODE	PART NAME AND DESCRIPTION	PER CAR	VALIANT LANCER	PLYMOUTH DODGE	CHRYSLER IMPERIAL
23-19-0	**DECK LID - Cont'd**				
23-19-63	BUMPER, Deck Lid				
	SC1, SC2, SC3, except SD3	2	---- ---	2166 620	1964 563
	SD3	2	---- ---	1964 563	
	SYL, SYM, SYH Upper Corner	2	---- ---	---- ---	1961 737
	Side Upper	2	---- ---	---- ---	1960 714
	Lower	2	---- ---	---- ---	1960 624
23-19-70	CATCH, Deck Lid Lock				
	All	1	2081 214	1867 661	1867 661
23-19-74	SUPPORT, Deck Lid Lower Panel Lock				
	SPL, SPM, SPH, SC1, SC2, SC3	1	2081 860	2254 630	2094 029
	SDL, SDM, SDH, SYL, SYM, SYH	1	---- ---	2167 791	1960 149
	SD3	1	---- ---	2094 029	
23-19-75	PLATE or REINFORCEMENT, Deck Lid Lock				
	SYL, SYM, SYH	1	---- ---	---- ---	1960 560
23-19-76	BRACKET, Deck Lid Hinge Support to Wheelhouse				
	SYL, SYM, SYH, except Cv. Cp.				
	Upper	2	---- ---	---- ---	1750 991
	Cv. Cp., SYM	1	---- ---	---- ---	1751 130-1
23-19-82	SUPPORT, Deck Lid Hinge Body Bracket	1	2259 038-9		
	SC1, SC2, SC3, except Cv. Cp., SD3				
	Upper	1	---- ---	2167 254-5	1909 410-1
	Lower	1	---- ---	2166 244-5	1884 636-7
	Cv. Cp., except SD3 Upper	1	---- ---	*2251 644-5	
	SD3 Upper	1	---- ---	1909 410-1	
	Lower	1	---- ---	1884 636-7	
	SYL, SYM, SYH, except Cv. Cp.	1	---- ---	---- ---	1961 078-9
	Cv. Cp., SYM	1	---- ---	---- ---	1961 080-1
23-19-84	HINGE, Deck Lid				
	Except Cv. Cp., SD3	2	2259 299	2255 261	
	Cv. Cp., SC1, SC2, except SD3	1	---- ---	2251 376-7	2165 572-3
	SD3, SC1, SC2, SC3, except Cv. Cp.	1	---- ---	1884 620-1	1884 620-1
	SYL, SYM, SYH	2	---- ---	---- ---	2093 530
	Cv. Cp., SD3	1	---- ---	2165 572-3	
23-19-85	PIN, Deck Lid Hinge				
	SYL, SYM, SYH	2	2188 990	2188 990	1691 899
23-19-92	SPRING, Deck Lid Hinge				
	Cv. Cp., SC1, SC2	2	---- ---	2252 320	2165 590
	Cv. Cp., SD3	2	---- ---	2165 590	
23-19-96	RING, Deck Lid Hinge Pin Retaining	2	1922 183	1922 183	1922 183
23-19-105	LOCK, Deck Lid				
	Except SD3	1	1961 038	2167 260	1961 057
	SD3	1	---- ---	1961 057	
	SCREW, All	2	*6022 332	*6022 332	*6022 332
23-19-114	NAME PLATE, MEDALLION or ORNAMENT, Deck Lid				
	NOTE: See Exterior Moulding Illustration in Front of Group 23 Body				

★ Indicates use as required.
⊟ Indicates parts not listed in any previous parts book.
Right and left part numbers are on same line, first number is right, second number is left.
* Indicates change or addition.

Printed in U.S.A.
Prices and specifications subject to change without notice.

March 8, 1963 Supersedes May 1, 1962.

MyMopar.com

CODE	PART NAME AND DESCRIPTION	PER CAR	VALIANT LANCER	PLYMOUTH DODGE	CHRYSLER IMPERIAL
23-19-0 DECK LID - Cont'd					
23-19-177	BAR, Deck Lid Hinge Torsion				
	SC1, SC2, SC3, except SD3	1	2259 300-1	2167 794-5	1964 512-3
	SD3, SYL, SYM, SYH	1	---- ---	1964 512-3	1877 540-1
23-19-178	ROLLER, Deck Lid Hinge Torsion Bar End				
	SC1, SC2, SC3, except SD3	2	2081 486	2189 004	1952 228
	SD3	2	---- ---	*1952 228	
	SYL, SYM, SYH Plate	2	---- ---	---- ---	6006 243
	Retainer, Center	1	2259 413	6000 594	6000 594
23-19-185	LINK, Deck Lid Hinge to Torsion Bar				
	Sp. 4 D., Sp. Cl. Cp., SYL, SYM, SYH	2	---- ---	---- ---	1877 521
	Cv. Cp., SYM	2	---- ---	---- ---	1877 520
23-20-0 FLOOR MATS					
23-20-8	MAT, Front Floor				
	Except SD3 Black	1	*2274 865	*2273 061	
	Heavy Duty, Black	1	2274 866	2273 062	
	Blue	1	---- ---	2273 058	
	Cordovan	1	---- ---	2273 060	
	SC1, Police Heavy Duty, Black	1	---- ---	---- ---	2178 398
23-20-9	CLIP, Front Floor Covering Retaining				
	All	1	---- ---	2292 446	
23-20-11	MAT, Intermediate Floor				
	Sub., SC1, Police, except SD3				
	Black	1	*2249 372	*2273 074	*2163 608
	Sub., except SD3 Blue	1	---- ---	*2273 071	
	Cordovan	1	---- ---	2273 073	
23-20-14	PLATE, Door Sill Scuff				
	4D., Sp. 4D., Sub., SYL, SYM, SYH, except SD3				
	Front	1	2259 142-3	2251 404-5	2162 136-7
	Rear	1	---- ---	2251 490-1	2162 138-9
	Sp. Cl. Cp., Cl. Sed., SYL, SYM, except SD3	1	2195 638-9	2251 328-9	2162 140-1
	Cv. Cp., SYM, except SD3	1	---- ---	2251 332-3	2162 140-1
	4D., SD3, SC1, SC2, SC3,				
	Front	1	---- ---	1882 888-9	1882 892-3
	Rear	1	2259 144-5	1884 454-5	1884 454-5
	Sp. 4D., Sub., SD3, SC1, SC2, SC3				
	Front	1	---- ---	1884 422-3	1884 426-7
	Rear	1	2259 146-7	1884 456-7	1884 456-7
	Sp. Cl. Cp., Cv. Cp., Cl. Sed., SD3, SC1, SC2	1	---- ---	1882 896-7	1882 900-1
23-20-16	INSERT, Door Sill Scuff Plate Tread				
	SYL, SYM, SYH	★	---- ---	---- ---	1839 956
	INSERT, Front Floor Carpet Heel Pad				
	SC2-300H	6	---- ---	---- ---	1766 986
23-20-19	SUPPORT, Door Sill Scuff Plate				
	4D., Sp. 4D., Sub., SD3, SC1, SC2, SC3				
	Front	1	---- ---	1954 286-7	1954 286-7
	Rear	1	---- ---	1954 288-9	1954 288-9

★ Indicates use as required.
⊟ Indicates parts not listed in any previous parts book.
March 8, 1963 Supersedes May 1, 1962.

Printed in U.S.A.
Prices and specifications subject to change without notice.
Right and left part numbers are on same line, first number is right, second number is left.
* Indicates change or addition.

MyMopar.com

CODE	PART NAME AND DESCRIPTION	PER CAR	VALIANT LANCER	PLYMOUTH DODGE	CHRYSLER IMPERIAL
23-20-0	**FLOOR MATS - Cont'd**				
23-20-19	SUPPORT - Cont'd				
	Sp. Cl. Cp., Cv. Cp., Cl. Sed., SD3, SC1, SC2	1	---- ---	1954 316-7	1954 316-7
	Sp. 4 D., SYL, SYM, SYH				
	Front	2	---- ---	---- ---	1692 173
	Rear, Right	1	---- ---	---- ---	1692 172
	Left	1	---- ---	---- ---	1810 910
	Sp. Cl. Cp., Cv. Cp., SYL, SYM	2	---- ---	---- ---	1690 742
23-20-20	EXTENSION, Rear Door Sill Scuff Plate Support, Galvanized				
	Sub., SD3	1	---- ---	1963 380-1	1963 380-1
	SCREW	4	---- ---	---- ---	9413 197
23-20-24	EXTENSION, Door Sill Scuff Plate, Aluminum				
	Sp. Cl. Cp., Cv. Cp., SD3, SC1, SC2				
	On Cowl	1	---- ---	2166 024-5	2166 024-5
	4D., Sp. 4D., SD3, SC1, SC2, SC3				
	Rear	1	---- ---	1963 308-9	1963 308-9
	Sub., SD3, SC1, SC3 Rear	1	---- ---	1963 378-9	1963 378-9
	Use w/Air Cond., Rear	1	---- ---	---- ---	2094 276-7
	Sp. Cl. Cp., C2-300H	1	---- ---	---- ---	1963 648-9
23-20-29	MAT, Rear Deck Floor				
	Except Cv. Cp., SD3 Gray	1	*2297 268	B2249 901	
	SD3, SC1, SC2, SC3 Black	1	2083 921	2211 129	2211 129
	Cv. Cp., SP2, SD2 Gray	1	---- ---	2274 867	
	Cv. Cp., SD3, SC1, SC2				
	Black, Left	1	---- ---	2249 552	2249 552
23-20-32	RETAINER, Floor Mat and Carpet	★	---- ---	2292 379	
23-20-41	MAT, Rear Floor				
	SC1, Police, except Sub., SD3				
	Black	1	*2249 372	*2273 074	*2176 348
	Except Sub., SD3 Blue	1	---- ---	*2273 071	
	Cordovan	1	---- ---	2273 073	
	Except Sub., SD3 Heavy Duty				
	Black	1	---- ---	*2273 075	
	Sub. Black	1	2271 050		
	Sub., except SD3 3rd. Seat Well, Black	1	---- ---	2273 411	2163 919
	2 Seat, Jute	1	---- ---	2241 842	
	SD3 3rd. Seat Well, Black	1	---- ---	2163 919	
23-20-65	PLATE, Center Pillar Scuff				
	4 D., Sub.	1	2259 122-3		
	4D., SD3, SC1, SC2, SC3	2	---- ---	1954 648	1954 648
	Sp. 4D., Sub., SD3, SC1, SC2, SC3	1	---- ---	1954 650-1	1954 650-1
23-21-0	**MIRRORS**				
23-21-3	MIRROR PACKAGE, Rear View				
	Taxi and Police Outside, Clear	1	2292 194	2292 194	
	Non-Glare	1	2292 195	2292 195	
	Consists of:				
	1 - ---- --- Mirror				
	1 - ---- --- Set Screw				
	1 - ---- --- Gasket				
	1 - ---- --- Clip				
	All, Replaceable Glass Type				
	Outside	★	*2299 574	*2299 574	
	Consists of:				
	1 - ---- --- Mirror				
	1 - ---- --- Gasket				
	2 - 9417 530 Screw				

★ Indicates use as required.
B Indicates parts not listed in any previous parts book.
Right and left part numbers are on same line, first number is right, second number is left.
* Indicates change or addition.

Printed in U.S.A.
Prices and specifications subject to change without notice.
March 8, 1963 Supersedes May 1, 1962.

MyMopar.com

CODE	PART NAME AND DESCRIPTION	PER CAR	VALIANT LANCER	PLYMOUTH DODGE	CHRYSLER IMPERIAL
23-21-0	**MIRRORS - Cont'd**				
23-21-3	MIRROR PACKAGE, Rear View Outside	★	2275 345	2275 345	
	Consists of:				
	1 - ---- --- Mirror				
	1 - ---- --- Gasket				
	2 - 9417 530 Screw				
	All Drivers Side	1	---- ---	---- ---	2275 020
	Consists of:				
	1 - ---- --- Mirror				
	1 - 2161 931 Anti-Squeak				
	2 - 9411 860 Screw				
	All Passenger Side	1	---- ---	---- ---	*2275 015
	Consists of:				
	1 - ---- --- Mirror				
	1 - 2161 931 Anti-Squeak				
	2 - 9411 860 Screw				
	SC1, SC2, SC3 Remote Control	1	---- ---	2275 937	2275 937
	Consists of:				
	1 - ---- --- Mirror				
	1 - 2161 931 Anti-Squeak				
	2 - 9411 860 Screw				
	1 - 2080 541 Nut				
	1 - ---- --- Bracket				
	2 - ---- --- Screw				
	All Inside Mirror-Matic	1	---- ---	---- ---	2161 079
	Consists of:				
	1 - ---- --- Mirror				
	1 - ---- --- Cable				
	1 - ---- --- Terminal				
23-21-5	GLASS and RETAINER SPRING PACKAGE, Rear View Outside Mirror Use w/2299 574	1	2299 575	2299 575	
	Consists of:				
	1 - ---- --- Glass				
	1 - ---- --- Spring, Retainer				
23-21-8	MIRROR, Rear View Inside				
	SC1, SC2, SC3, except SD3	1	2162 486	2162 286	1876 331
	Except SD3 Prismatic	1	2162 487	2162 414	*2421 208
	SD3	1	---- ---	1876 331	
	Prismatic	1	---- ---	*2421 208	
23-21-14	BASE or BRACKET, Rear View Inside Mirror				
	SYL, SYM, SYH, except Cv. Cp., SD3	1	2082 978	2292 240	2080 774
	Except SD3 Chrome	1	2243 888	2299 672	
	Cv. Cp., SYM, except SD3	1	---- ---	2292 241	2080 897
	SD3, SC1, SC2, SC3	1	---- ---	2086 275	2080 411
23-21-15	MIRROR, Rear View Outside Remote Control				
	SYL, SYM, SYH	1	---- ---	---- ---	2161 426
23-21-16	SPACER, Rear View Inside Mirror Mounting Bracket				
	Sp. 4D., Sp. Cl. Cp., Sub., SP2-P, SD1-H, SD2-H, SD2-P Black	1	---- ---	2297 270	
23-21-18	ANTI-SQUEAK, Rear View Outside Mirror Base	1	---- ---	---- ---	2161 931
23-21-26	RETAINER, Rear View Inside Mirror Shaft				
	SYL, SYM, SYH, except Cv. Cp.	1	2080 776	---- ---	2080 776
	SD3, SC1, SC2, SC3	1	---- ---	1839 965	1839 965

★ Indicates use as required.
Ⓑ Indicates parts not listed in any previous parts book.
March 8, 1963 Supersedes May 1, 1962.

Printed in U.S.A.
Prices and specifications subject to change without notice.
Right and left part numbers are on same line, first number is right, second number is left.
* Indicates change or addition.

MyMopar.com

CODE	PART NAME AND DESCRIPTION	PER CAR	VALIANT LANCER	PLYMOUTH DODGE	CHRYSLER IMPERIAL
23-21-0	**MIRRORS - Cont'd**				
23-21-32	HANDLE, Rear View Outside Mirror Remote Control				
	SC1, SC2, SC3	1	---- ---	---- ---	2162 165
	SYL, SYM, SYH	1	---- ---	---- ---	2161 428
23-21-45	SHAFT, Rear View Inside Mirror				
	SD3, SC1, SC2, SC3	1	---- ---	2080 874	2161 467
	SYL, SYM, SYH	1	---- ---	---- ---	2161 329
23-21-46	SPRING, Rear View Inside Mirror Shaft Tension				
	SD3, SC1, SC2, SC3	1	---- ---	1839 966	1839 966
23-21-47	PLUG, Rear View Inside Mirror Shaft Tension Adjusting				
	SD3, SC1, SC2, SC3	1	---- ---	1839 967	1839 967
23-21-48	REINFORCEMENT, Rear View Inside Mirror Base				
	SD3	1	---- ---	2161 788	
23-21-50	NUT, Rear View Outside Mirror Remote Control Dummy				
	SYL, SYM, SYH	1	---- ---	---- ---	2162 170
	WASHER	1	---- ---	---- ---	6022 791
23-21-65	HOUSING, Rear View Outside Mirror Remote Control				
	SC1, SC2, SC3	1	---- ---	---- ---	2162 115
	NUT	2	---- ---	---- ---	6022 826
23-21-66	BEZEL, Rear View Outside Mirror Remote Control Handle				
	SC1, SC2, SC3	1	---- ---	---- ---	2080 489
	SYL, SYM, SYH	1	---- ---	---- ---	2161 431
23-21-74	NUT, Rear View Outside Mirror Remote Control Attaching				
	SC1, SC2, SC3	1	---- ---	---- ---	1901 838
	SYL, SYM, SYH	1	---- ---	---- ---	2161 432
23-22-0	**GARNISH MOULDINGS**				
23-22-7	MOULDING, Door Garnish				
	4 D., Sub. Front	1	2081 402-3		
	Rear	2	2081 478		
	Cl. Sed.	1	2195 398-9		
	4D., SD3, SC1 Front	1	---- ---	1883 148-9	1883 148-9
	Rear	1	---- ---	1883 168-9	1883 168-9
	4 D., SC2, SC3 Prime, Front	1	---- ---	---- ---	1883 156-7
	Rear	1	---- ---	---- ---	1883 176-7
23-22-9	SUPPORT, Door Garnish Moulding				
	Except Sp. Cl. Cp.	★	2082 881		
23-22-53	MOULDING, Quarter Window Garnish				
	Cl. Sed. Front	1	2195 758-9		
	Sub., Cl. Sed. Upper	1	*2195 800-1		
	CL. Sed. Lower	1	*2195 274-5		
	Sp. Cl. Cp., Cl. Sed., Rear	1	2195 754-5		
	Sp. 4D., SD3, SC1, SC2				
	w/Low Window, Prime	1	---- ---	1884 828-9	1884 828-9
	Chrome	1	---- ---	*1963 708-9	*1963 708-9
	Sp. 4 D., SC1, SC2, SC3				
	w/High Window, Prime	1	---- ---	---- ---	1952 976-7
	Sp. 4D., SC2, SC3 w/High Window, Chrome	1	---- ---	---- ---	1963 710-1
	Sp. 4 D., SYL, SYM, SYH				
	Chrome, Front	1	---- ---	---- ---	*1901 994-5
	Rear	1	---- ---	---- ---	*2080 858-9
	Sp. Cl. Cp., SD3, SC1, SC2				
	Chrome End	1	---- ---	2080 314-5	2080 314-5

★ Indicates use as required.
⊟ Indicates parts not listed in any previous parts book.
Right and left part numbers are on same line, first number is right, second number is left.
* Indicates change or addition.

Printed in U.S.A.
Prices and specifications subject to change without notice.
March 8, 1963 Supersedes May 1, 1962.

MyMopar.com

CODE	PART NAME AND DESCRIPTION		PER CAR	VALIANT LANCER	PLYMOUTH DODGE	CHRYSLER IMPERIAL
23-22-0	**GARNISH MOULDINGS - Cont'd**					
23-22-53	MOULDING - Cont'd					
	Sub., except SD3	2 Seat	2	---- ---	*2422 466	
	Sub., except SD3	3 Seat, Right	1	---- ---	*2422 466	
		Front, Left	1	---- ---	2422 469	
		Rear, Left	1	---- ---	2422 470	
	Sub., SD3	Front to Roof Rail	1	---- ---	1902 306-7	1902 306-7
		Front	1	---- ---	1839 926-7	1839 926-7
		Upper Center	1	---- ---	1839 928-9	1839 928-9
		Upper Rear	1	---- ---	1839 932-3	1839 932-3
		Lower Center	1	---- ---	1839 930-1	1839 930-1
		Lower Rear	1	---- ---	1839 934-5	1839 934-5
23-22-55	SUPPORT, Quarter Window Garnish Moulding					
	Cl. Sed.	Upper	2	2195 775		
		Upper	2	2195 883		
		Lower	2	2082 881		
	Sp. Cl. Cp., Cl. Sed.	Rear	4	2195 775		
23-22-77	MOULDING, Tailgate Belt Garnish					
	Sub., SD3		1	---- ---	1839 977	1839 977
23-22-78	MOULDING, Tailgate Opening Garnish					
	Sub., except SD3	Paint as Required, Plastic, Side, Upper	1	---- ---	2273 328-9	
	Sub., except SD3	Lower	1	---- ---	2162 506-7	
	Sub., SD3	Upper	1	---- ---	1839 976	1839 976
23-22-80	SPACER, Tailgate Belt Garnish Moulding					
	Sub., SD3	Outer	2	---- ---	2094 449	2094 449
		Inner	2	---- ---	2094 448	2094 448
23-22-81	SEAL, Tailgate Garnish Moulding End					
	Sub., SD3		2	---- ---	2162 547	2162 547
23-22-85	COVER, Rear Window Garnish Moulding Joint					
	Sp. Cl. Cp., SC1, SC2,	Chrome, Upper	1	---- ---	---- ---	2086 168
	Sp. 4D., SC1, SC2	w/High Window, Chrome, Upper	1	---- ---	---- ---	1963 670
	Sp. 4D., SD3, SC1, SC2, SC3	Chrome, Upper	1	---- ---	2086 168	2086 168
	Sp. 4 D., Sp. Cl. Cp., SYL, SYM	Chrome, Upper	1	---- ---	---- ---	1901 990
		Lower	1	---- ---	---- ---	1901 991
23-22-86	MOULDING, Rear Low Window Garnish					
	4 D., Sp. 4 D., SD3, SC1, SC2, SC3	Prime, Upper	1	---- ---	*1882 955	*1882 955
		Side	1	---- ---	1883 002-3	1883 002-3
	SP. 4 D., SC1, SC2	Chrome, Upper	1	---- ---	---- ---	*1964 154
		Side	1	---- ---	---- ---	*1964 152-3
	MOULDING, Rear High Window Garnish					
	Sp. Cl. Cp., SD3, SC1, SC2	Prime, Upper and Side	1	---- ---	*1839 940-1	*1839 940-1
		Chrome, Upper and Side	1	---- ---	*2086 056-7	*2086 056-7
	Sp. 4D., SC1, SC2, SC3	Prime, Upper and Side	1	---- ---	---- ---	1952 654-5
	Sp. 4D., SC1, SC2, SC3	Chrome, Upper and Side	1	---- ---	---- ---	1963 668-9
	MOULDING, Rear Window Garnish					
	Sp. 4 D., SYL, SYM,	Upper	1	---- ---	---- ---	1901 971-2
		Lower	1	---- ---	---- ---	1901 969-70
		Lower Corner	1	---- ---	---- ---	1901 992-3
	Sp. 4 D., SYH,	Upper	1	---- ---	---- ---	2080 860
		Lower	1	---- ---	---- ---	2080 910

★ Indicates use as required.
⊟ Indicates parts not listed in any previous parts book.
March 8, 1963 Supersedes May 1, 1962.

Printed in U.S.A.
Prices and specifications subject to change without notice.
Right and left part numbers are on same line, first number is right, second number is left.
* Indicates change or addition.

MyMopar.com

CODE	PART NAME AND DESCRIPTION	PER CAR	VALIANT LANCER	PLYMOUTH DODGE	CHRYSLER IMPERIAL
23-22-0	**GARNISH MOULDINGS - Cont'd**				
23-22-86	MOULDING - Cont'd				
	Sp. Cl. Cp., SYL, SYM				
	Upper	1	---- ---	---- ---	1901 988-9
	Lower	1	---- ---	---- ---	1901 986-7
	Lower Corner	1	---- ---	---- ---	1902 000-1
23-22-145	MOULDING, Windshield Garnish	1	2083 086-7		
	Sp. Cl. Cp., SP2-P, SD2-P				
	Chrome, Upper	1	---- ---	*2216 897	
	Upper Corner	1	---- ---	2216 898-9	
	Sp. Cl. Cp., Cv. Cp., except SD3				
	Chrome, Side	1	---- ---	*2252 042-3	
	Lower	1	---- ---	2217 092	
	Except SD3 Prime, Side	1	---- ---	*2167 028-9	
	SC1, SC2, SC3, except SD3				
	Prime, Lower	1	---- ---	2161 898	1839 546-7
	SC1, SC2, SC3, except Cv. Cp., SD3				
	Prime, Upper	1	---- ---	2167 025	2165 504
	SD3 Prime, Upper	1	---- ---	2165 504	
	4 D., Cl. Sed., Sub., except SD3				
	Prime, Upper Corner	1	---- ---	*2216 160-1	
	Sp. 4 D., Sp. Cl. Cp., except SD3				
	Prime, Upper Corner	1	---- ---	*2216 158-9	
	Cv. Cp., except SP2-P, SD2-P, SD3				
	Chrome, Upper	1	---- ---	*2251 422	
	SD3, SC1, SC2, SC3, except Cv. Cp.				
	Prime, Side	1	---- ---	2165 498-9	2165 498-9
	SP. 4 D., Sp. Cl. Cp., Sub., SC1, SC2, SC3				
	Chrome, Upper	1	---- ---	---- ---	*2165 500
	Side	1	---- ---	---- ---	2165 494-5
	Cv. Cp., SD3, SC1, SC2				
	Chrome, Upper	1	---- ---	1954 048	1954 048
	Side	1	---- ---	1963 346-7	1963 346-7
	Cv. Cp., SD3, SC1, SC2				
	Prime, Upper	1	---- ---	*1882 915	*1882 915
	SD3, SYL, SYM, SYH				
	Prime, Lower	1	---- ---	1839 558-9	1839 566-7
	Cv. Cp., SYM, Upper	1	---- ---	---- ---	2093 619
	Side	1	---- ---	---- ---	1901 998-9
	Sp. 4 D., Sp. Cl. Cp., SYL, SYM, SYH				
	Chrome, Upper	1	---- ---	---- ---	2080 782-3
	Side	1	---- ---	---- ---	1901 996-7
	Upper Corner	1	---- ---	---- ---	1901 974-5
	SYL, SYM, SYH Plate, Inner	1	---- ---	---- ---	*2080 306-7
	Outer	1	---- ---	---- ---	1902 274-5
23-22-148	COVER, Windshield Garnish Moulding Center Joint				
	SYL, SYM, SYH Lower, Prime	1	---- ---	---- ---	2080 125
	Chrome	1	---- ---	---- ---	2080 284
23-22-151	SUPPORT, Windshield Garnish Moulding				
	Cv. Cp., SD3, SC1, SC2	1	---- ---	*1964 348	*1964 348
	SD3, SC1, SC2, SC3 Upper	4	---- ---	*1963 956	*1963 956
	CLIP or RETAINER, Windshield Garnish Moulding				
	Except SD3 Upper	4	---- ---	*6000 967	
	Side	4	---- ---	*6001 036	
23-22-152	SPACER, Windshield Upper Garnish Moulding				
	Sp. 4 D., Sp. Cl. Cp., SYL, SYM, SYH	6	---- ---	---- ---	1901 973
23-22-160	ORNAMENT, Windshield Lower Garnish Moulding				
	SYL, SYM, SYH	6	---- ---	---- ---	2080 285
	NUT	6	---- ---	---- ---	6008 032

★ Indicates use as required.
⊟ Indicates parts not listed in any previous parts book.
Right and left part numbers are on same line, first number is right, second number is left.
* Indicates change or addition.

Printed in U.S.A.
Prices and specifications subject to change without notice.
March 8, 1963 Supersedes May 1, 1962.

MyMopar.com

CODE	PART NAME AND DESCRIPTION	PER CAR	VALIANT LANCER	PLYMOUTH DODGE	CHRYSLER IMPERIAL

23-23-0 OUTSIDE FINISH MOULDINGS

23-23-2 MOULDING, Body Side Sill Outside Finish

NOTE: See Exterior Moulding Illustration in Front of Group 23 Body.

23-23-7 MOULDING, Cowl Outside Finish

NOTE: See Exterior Moulding Illustration in Front of Group 23 Body.

23-23-12	TAPE, Outside Finish Moulding				
	SY1 Quarter Panel Upper Front . .	2	---- ---	---- ---	⊟2480 316
	Quarter Panel Upper Rear . . .	1	---- ---	---- ---	⊟2423 464-5
	Deck Lid	1	---- ---	---- ---	⊟2480 317
	Deck Lower Panel	2	---- ---	---- ---	⊟2423 470
	Drain Trough	2	---- ---	---- ---	⊟2423 472
	Filler Door	1	---- ---	---- ---	⊟2423 474
	Tail Lamps	2	---- ---	---- ---	⊟2424 297
	SP. 4 D., SY1 Roof	1	---- ---	---- ---	⊟2480 318-9
	Sp. Cl. Cp., SY1 Roof	1	---- ---	---- ---	⊟2423 976-7
23-23-14	MOULDING, Front Pillar Face				
	Cv. Cp., SYM	1	---- ---	---- ---	2093 136-7
	Sp. 4 D., Sp. Cl. Cp., SYL, SYM, SYH	1	---- ---	---- ---	*1691 932-3

23-23-16 PANEL, Center Pillar Upper Finish

NOTE: See Exterior Moulding Illustration in Front of Group 23 Body.

23-23-23 MOULDING, Deck Opening Lower Panel

NOTE: See Exterior Moulding Illustration in Front of Group 23 Body.

23-23-28 PANEL, Deck Opening Lower Panel Finish

NOTE: See Exterior Moulding Illustration in Front of Group 23 Body.

23-23-30 MOULDING, Deck Lid

NOTE: See Exterior Moulding Illustration in Front of Group 23 Body.

23-23-32 MOULDING, Front Door Outside Finish

NOTE: See Exterior Moulding Illustration in Front of Group 23 Body.

23-23-33 MOULDING, Rear Door Outside Finish

NOTE: See Exterior Moulding Illustration in Front of Group 23 Body.

23-23-36 MOULDING, Front Door Vent Wing Division Channel

NOTE: See Exterior Moulding Illustration in Front of Group 23 Body.

23-23-39 MOULDING, Quarter Panel Outside Finish

NOTE: See Exterior Moulding Illustration in Front of Group 23 Body.

MyMopar.com

CODE	PART NAME AND DESCRIPTION	PER CAR	VALIANT LANCER	PLYMOUTH DODGE	CHRYSLER IMPERIAL
23-23-0	**OUTSIDE FINISH MOULDINGS - Cont'd**				
23-23-41	CAP or COVER, Body Outside Finish Moulding Joint NOTE: See Exterior Moulding Illustrations in Front of Group 23 Body.				
23-23-42	MOULDING, Roof Panel Outside Finish NOTE: See Exterior Moulding Illustrations in Front of Group 23 Body.				
23-23-49	MOULDING, Folding Top Outside Finish NOTE: See Exterior Moulding Illustrations in Front of Group 23 Body.				
23-23-52	MOULDING, Rear Window Outside Finish NOTE: See Exterior Moulding Illustrations in Front of Group 23 Body.				
23-23-57	SPACER, Quarter Panel Outside Finish Rear Moulding to Tail Lamp Except Sub., SD1, SD2	2	---- ---	⊟2423 018	
23-23-60	MOULDING, Tailgate Opening Outside Finish NOTE: See Exterior Moulding Illustrations in Front of Group 23 Body.				
23-23-61	MOULDING PACKAGE, Tailgate Outside Finish NOTE: See Exterior Moulding Illustrations in Front of Group 23 Body.				
23-23-65	MOULDING, Windshield Outside Finish NOTE: See Exterior Moulding Illustrations in Front of Group 23 Body.				
23-23-66	CAP, Windshield Outside Finish Moulding Joint NOTE: See Exterior Moulding Illustrations in Front of Group 23 Body.				
23-23-73	MOULDING, Quarter Window Outside Finish NOTE: See Exterior Moulding Illustrations in Front of Group 23 Body.				
23-23-74	CAP, Quarter Window Outside Finish NOTE: See Exterior Moulding Illustrations in Front of Group 23 Body.				
23-23-75	SEAL, Windshield Outside Finish Moulding to Windshield Opening Upper Frame Reinforcement Cv. Cp.	1	---- ---	2254 525	
23-23-80	INSERT, Rear Door Outside Panel Front Moulding NOTE: See Exterior Moulding Illustrations in Front of Group 23 Body.				
23-26-0	**TRIM FINISH MOULDINGS**				
23-26-2	MOULDING, Rear Quarter Arm Rest Sp. Cl. Cp., Cv. Cp., SY1-M	2	---- ---	---- ---	2241 075
23-26-14	MOULDING, Rear Upper Pillar Inside Sub.	1	2082 924-5		
	CLIP	★	*6006 451		
23-26-18	PANEL, Body Lock Pillar Inside Finish Cl. Sed. Prime	1	---- ---	2216 448-9	
23-26-23	MOULDING, Door Trim Panel Cl. Sed., Sp. Cl. Cp., SL-H Upper	1	2241 920-1		

★ Indicates use as required.
⊟ Indicates parts not listed in any previous parts book.
Right and left part numbers are on same line, first number is right, second number is left.
* Indicates change or addition.

Printed in U.S.A.
Prices and specifications subject to change without notice.
March 8, 1963 Supersedes May 1, 1962.

MyMopar.com

CODE	PART NAME AND DESCRIPTION	PER CAR	VALIANT LANCER	PLYMOUTH DODGE	CHRYSLER IMPERIAL
23-26-0	**TRIM FINISH MOULDINGS - Cont'd**				
23-26-23	MOULDING - Cont'd				
	4 D., 4 D. Sub., SL-H Front Upper	1	2241 922-3		
	4 D., 4 D. Sub., SL-H Rear Lower	2	2241 925		
	4 D., Sp. 4 D., Sub., SP1-H, SP2-H Front Lower	2	---- ---	2292 297	
	Cl. Sed., Sp. Cl. Cp., SP1-M, SP2-M	2	---- ---	2241 686	
	4 D., Sub., SP1-M, SP2-M Rear	2	---- ---	2241 688	
	4 D., Sub., SP1-M, SP2-M Front	2	---- ---	2241 687	
	Sp. Cl. Cp., Cv. Cp., SD1, SD2 Lower	2	---- ---	2241 691	
	All, SD1-M, SD2-M, SD1-H, SD2-H, SD2-P Front Upper	1	---- ---	2241 700-1	
	4 D., Sp. 4 D., Sub., SD1-H, SD2-H, SD2-P Rear	1	---- ---	2241 694-5	
	4 D., Sp. 4 D., Sub., SD1-H, SD2-H, SD2-P Front Lower	2	---- ---	2241 692	
	4 D., Sp. 4 D., Sub., SP1-H, SP2-H Rear Upper	2	---- ---	2292 301	
	4 D., Sp. 4 D., Sub., SP1-H, SP2-H Rear Lower	2	---- ---	2292 302	
	4 D., Sp. 4 D. Sub., SP1-H, SP2-H Front Upper	1	---- ---	2292 294-5	
	Sp. Cl. Cp., Cv. Cp., SP1-H, SP2-H, SP2-P Upper	1	---- ---	2292 292-3	
	Sp. Cl. Cp., Cv. Cp., SP1-H, SP2-H, SP2-P Lower	2	---- ---	2292 296	
	Sp. Cl. Cp., Cv. Cp., SD3 Upper	2	---- ---	2419 394	
	4 D., Sp. 4 D., SD3 Rear Lower	2	---- ---	2419 393	
	4 D., Sp. 4 D., Sp. 4 D. Sub., SD3 Front Upper	2	---- ---	2419 388	
	Sp. 4 D., Sp. 4 D. Sub., SD3 Rear Upper	2	---- ---	2419 392	
	Sp. Cl. Cp., SC1 Upper, Intermediate	2	---- ---	---- ---	⊟2419 451
	Sp. Cl. Cp., SC1 Lower, Intermediate	2	---- ---	---- ---	⊟2419 452
	4 D., SC1, Front Lower	2	---- ---	---- ---	⊟2419 389
	Sp. 4D., 4 D., SC1 Front, Upper, Intermediate	2	---- ---	---- ---	⊟2419 599
	Sp. 4 D., SC1 Front, Lower, Intermediate	2	---- ---	---- ---	⊟2419 600
	4 D., Sp. 4 D., SC1 Rear Upper, Intermediate	2	---- ---	---- ---	⊟2419 601
	4 D., Sp. 4 D., SC1 Rear Lower, Intermediate	2	---- ---	---- ---	⊟2419 599
	Sp. 4D., SC1, SC2 Front Lower	2	---- ---	---- ---	2419 390
	Sp. Cl. Cp., Cv. Cp., SC1-L, SC2-M Upper	2	---- ---	---- ---	2241 716
	4 D., SC1-L, SC2-M Rear Upper	2	---- ---	---- ---	2241 731
	4 D., Sp. 4 D. Sub., SC1-L, SC2-M Rear Upper	2	---- ---	---- ---	*2419 392
	4 D., Sp. 4 D., Sp. 4 D. Sub., SC1-L Front Upper	2	---- ---	---- ---	*2419 388
	Sp. 4 D., SC2-M Front Upper	2	---- ---	---- ---	*2419 388
	Sp. 4 D., SC2-M Rear Lower	2	---- ---	---- ---	2241 732
	Sp. Cl. Cp., Cv. Cp., SC2-M Lower	2	---- ---	---- ---	2241 735
	4 D., SC2-M Front Lower	2	---- ---	---- ---	2241 716
	4 D., Sp. 4 D., Sp 4 D. Sub., SC3-H Rear Upper	1	---- ---	---- ---	2162 734-5
	4 D., Sp. 4 D., Sp. 4 D. Sub., SC3-H Rear Lower	1	---- ---	---- ---	2162 736-7
	4 D., SC3-H Front Upper	1	---- ---	---- ---	2162 726-7
	Lower	2	---- ---	---- ---	2162 730

★ Indicates use as required.
⊟ Indicates parts not listed in any previous parts book.
March 8, 1963 Supersedes May 1, 1962.

Printed in U.S.A.
Prices and specifications subject to change without notice.
Right and left part numbers are on same line, first number is right, second number is left.
* Indicates change or addition.

MyMopar.com

CODE	PART NAME AND DESCRIPTION	PER CAR	VALIANT LANCER	PLYMOUTH DODGE	CHRYSLER IMPERIAL
23-26-0	**TRIM FINISH MOULDINGS - Cont'd**				
23-26-23	MOULDING - Cont'd				
	4 D., Sp. 4 D. Sub., SC3-H Front Upper	1	---- ---	---- ---	2162 728-9
	4 D., Sp. 4 D. Sub., SC3-H Front Lower	1	---- ---	---- ---	2162 732-3
	Sp. 4 D., SY1-M, SY1-H Front Lower	1	---- ---	---- ---	2241 126-7
	Sp. 4 D., SY1-M, SY1-H Rear Lower	2	---- ---	---- ---	2241 142
	Sp. 4 D., SY1 Rear, Recess Finish Plate Mldg.	1	---- ---	---- ---	2241 084-5
	All, SY1 Front, Recess Finish Plate	1	---- ---	---- ---	2241 082-3
	Sp. 4 D., SY1-M, SY1-H Rear, Recess Finish Plate	1	---- ---	---- ---	2241 624-5
	All, SY1-M Front, Finish Plate	1	---- ---	---- ---	2241 808-9
	Sp. Cl. Cp., Cv. Cp., SY1-M Lower	2	---- ---	---- ---	2241 098
23-26-34	MOULDING, Front Seat Back Finish				
	Sp. 4 D., SY1-M, SY1-H	1	---- ---	---- ---	2086 362
	Sp. Cl. Cp., Cv. Cp., SY1-M Right	1	---- ---	---- ---	2086 360
	Left	1	---- ---	---- ---	1900 762
23-26-41	MOULDING, Roof Side Rail Inside Finish				
	Sp. 4 D., Sp. 4 D. Sub., SC1, SC2, SC3, except SD3 Prime	1	---- ---	---- ---	1882 946-7
	Sp. Cl. Cp., SC1, SC2, except SD3 Prime	1	2195 406-7	2167 222-3	1839 936-7
	Sp. Cl. Cp., SD3 Prime	1	---- ---	1839 936-7	
	Sp. 4 D., Sp. 4 D. Sub., SD3 Prime	1	---- ---	1882 946-7	
	Sp. Cl. Cp., SC1, SC2, Stainless Steel	1	---- ---	---- ---	*2086 058-9
	Sp. 4 D., SC1, SC2, SC3 Stainless Steel	1	---- ---	*2167 212-3	*1954 862-3
	Sp. Cl. Cp., SY1 Front, Chrome	1	---- ---	---- ---	1901 980-1
	Sp. Cl. Cp., SY1 Rear, Chrome	1	---- ---	---- ---	1901 984-5
	Sp. 4 D., SY1 Front, Chrome	1	---- ---	---- ---	1901 978-9
	Sp. 4 D., SY1 Rear, Chrome	1	---- ---	---- ---	1901 982-3
	Sp. Cl. Cp., SP2-P, SD2-P Chrome	1	---- ---	2252 274-5	
	EXTENSION, Roof Side Rail Inside Finish Moulding				
	Sp. Cl. Cp. Prime	1	2243 658-9		
	Sp. Cl. Cp., Sp. 4 D., Sp. 4 D. Sub., SD3, SC1, SC2, SC3 Front, Prime	1	---- ---	1952 880-1	1952 880-1
	Sp. Cl. Cp., Sp. 4 D., SC2, SC3 Front, Stainless Steel	1	---- ---	---- ---	1952 896-7
23-26-44	SUPPORT, Roof Side Rail Inside Moulding				
	Sp. Cl. Cp.	★	2195 883		
	Sp. Cl. Cp., SD3, SC1, SC2	1	---- ---	1878 440-1	1878 440-1
	Sp. 4 D., Sp. 4 D. Sub., SD3, SC1, SC2, SC3	1	---- ---	1869 564-5	1869 564-5
23-26-45	MOULDING, Front Seat Side Shield				
	Sp. 4 D., SY1-M, SY1-H	1	---- ---	---- ---	2080 382-3
	Sp. Cl. Cp., Cv. Cp., SY1-M Upper	1	---- ---	---- ---	2080 384-5
	Sp. Cl. Cp., Cv. Cp., SY1-M Lower	1	---- ---	---- ---	2080 386-7
23-26-47	MOULDING, Rear Quarter Trim Panel Finish				
	4 D. Sub., Extension Upper Front	1	2292 222-3		
	Sub. Upper Front	1	2083 246-7		
	Sub. Upper Rear	1	2083 248-9		
	Sub. Upper Center	1	2162 376-7		
	Sub. Rear	1	2083 244-5		

★ Indicates use as required.
⊟ Indicates parts not listed in any previous parts book.
Right and left part numbers are on same line, first number is right, second number is left.
* Indicates change or addition.

Printed in U.S.A.
Prices and specifications subject to change without notice.
March 8, 1963 Supersedes May 1, 1962.

MyMopar.com

CODE	PART NAME AND DESCRIPTION	PER CAR	VALIANT LANCER	PLYMOUTH DODGE	CHRYSLER IMPERIAL
23-26-0	**TRIM FINISH MOULDINGS - Cont'd**				
23-26-47	MOULDING - Cont'd				
	Sp. Cl. Cp., SD3 Rear Upper	2	---- ---	2419 396	
	Sp. Cl. Cp., SC1 Rear Lower	2	---- ---	---- ---	1835 239
	Cl. Sed., Sp. Cl. Cp., SP1-M, SP2-M	2	---- ---	2241 689	
	Cv. Cp., SP2-H, SP2-P	2	---- ---	2292 300	
	Sp. Cl. Cp., SP1-H, SP2-H, SP2-P Upper	2	---- ---	2292 298	
	Sp. Cl. Cp., SP1-H, SP2-H, SP2-P Lower	2	---- ---	2292 299	
	Sp. Cl. Cp., SD1-H, SD2-H, SD2-P	1	---- ---	2241 694-5	
	Cv. Cp., SD2-H, SD2-P	2	---- ---	2292 341	
	Sub., 3 Seater, Wheelhouse and Lower Quarter Trim Cover and Front Joint	1	---- ---	2292 180-1	
	Sp. Cl. Cp., SC1 Upper, Intermediate	2	---- ---	---- ---	⊟2419 453
	Sp. Cl. Cp., SC1, SC2 Rear Upper	2	---- ---	---- ---	2419 396
	Sp. Cl. Cp., SC2 Rear Lower	2	---- ---	---- ---	2241 740
	Cv. Cp., SD3, SC1, SC2 Rear Upper	2	---- ---	*2241 721	*2241 721
	Cv. Cp., SC2 Rear Lower	2	---- ---	---- ---	2241 742
	Sp. 4 D. Sub., SD3, SC1, SC3, Wheelhouse Front Upper	1	---- ---	2080 644-5	2080 644-5
	Front Lower	1	---- ---	2080 438-9	2080 438-9
23-26-53	SPACER, Roof Rail Inside Finish Moulding Screw				
	Sp. Cl. Cp., Sp. 4 D.	12	---- ---	2255 091	
23-26-58	CAP, Center Pillar Finish				
	4 D., 4 D. Sub.	2	2082 687		
	Sp. 4 D., SY1	1	---- ---	---- ---	2161 610-1
23-26-60	SUPPORT, Door or Quarter Inside Trim Panel				
	All	★	2195 786		
23-26-62	CAP, Rear Door Trim Panel Finish Rear				
	Sp. 4 D., Sp. 4 D. Sub., SD3, SC1, SC2, SC3 Chrome	1	---- ---	2241 494-5	2241 494-5
	Sp. 4 D., SY1	1	---- ---	---- ---	1830 498-9
23-26-64	PLATE, Center Pillar Upper Finish				
	Sp. 4 D. Prime	2	---- ---	2217 177	
23-26-80	MEDALLION, Door Trim Panel				
	All, SD1-H, SD2-H, SD2-P	2	---- ---	2241 693	
	All, SP1-H, SP2-H	2	---- ---	2292 443	
	All, SD2-P	2	---- ---	2292 452	
	NAMEPLATE, Front Door Trim Panel				
	4 D., Sp. 4 D., Sp. 4 D. Sub., SC3-H	2	---- ---	---- ---	2162 731
	NUMERAL, Front Door Trim Panel				
	SC2-M "3"	2	---- ---	---- ---	1840 998
	"0"	4	---- ---	---- ---	1840 999
	MEDALLION, Door Trim Panel				
	Sp. Cl. Cp., SV1-P Signet 200	2	---- ---	2276 730	
	NAME PLATE, Front Door Trim Panel Recess				
	Sp. 4 D., SY1-H LeBaron	2	---- ---	---- ---	2241 618
	Sp. Cl. Cp., Sp. 4 D., SY1-L Crown	2	---- ---	---- ---	*2241 076
23-26-87	MOULDING, Floor Console				
	SP2-P, SD2-P	1	---- ---	2292 458-9	
	SC2-M Front	1	---- ---	---- ---	2292 512-3
	SC2-M Rear	1	---- ---	---- ---	2292 514
	SC2-M Rear	1	---- ---	---- ---	2161 014-5
23-26-89	COVER, Floor Tunnel Console Finish Moulding Joint				
	SC2-M	2	---- ---	---- ---	2161 011

★ Indicates use as required.
⊟ Indicates parts not listed in any previous parts book.
March 8, 1963 Supersedes May 1, 1962.

Printed in U.S.A.
Prices and specifications subject to change without notice.
Right and left part numbers are on same line, first number is right, second number is left.
* Indicates change or addition.

MyMopar.com

CODE	PART NAME AND DESCRIPTION	PER CAR	VALIANT LANCER	PLYMOUTH DODGE	CHRYSLER IMPERIAL
23-31-0	**PADS, LINERS, INSULATORS, SEALS, ANTI-SQUEAK**				
23-31-33	LINER, Dash				
	All, w/or w/o Heater				
	Except SD3 — Right	1	2241 882	2241 944	
	Left	1	2241 913	2241 945	
	All, w/o Heater — Center	1	---- ---	2241 943	
	All, SD3, SC1, SC2, SC3 w/or w/o Heater	1	---- ---	2241 592	2241 592
	All, SY1 w/or w/o Heater	1	---- ---	---- ---	2162 839
	FASTENER	★	6000 096	6000 096	
23-31-38	PLUG, Dash Liner Retainer Hole				
	All w/Heater	3	---- ---	2216 829	
23-31-116	COVER, Front Floor Pan Gearshift Filler				
	Except Sub., SP2, SD2, 413 cu. in. Eng., w/Std. Trans. — Black	1	---- ---	⊟2249 907	
23-31-119	PAD, Steering Column to Floor Finish				
	SY1	1	---- ---	---- ---	1773 635
	SD3, SC1 — w/o Power Steering, w/Auto Trans.	1	---- ---	2080 936	2080 936
	SD3, SC1 — w/o Power Steering, w/Std. Trans. w/LINER	1	---- ---	2162 293	2162 293
	SC1, SC2 — w/Power Steering, w/Std. Trans., w/LINER	1	---- ---	---- ---	2162 545
23-31-124	SEAL, Steering Column to Floor				
	SY1	1	---- ---	---- ---	1830 452
	SD3, SC1 — w/o Power Steering, w/Std. Trans.	1	---- ---	2162 290	2162 290
	SD3, SC1 — w/o Power Steering, w/Auto Trans.	1	---- ---	2080 766	2080 766
	SC1 — w/Power Steering, w/Auto.				
	SD3, SC1, SC2 — w/Power Steering, w/Auto. Trans.	1	---- ---	*2080 768	*2080 768
	SC1, SC2 — w/Power Steering, w/Std. Trans.	1	---- ---	---- ---	2162 544
	SC3 — w/Power Steering, w/Auto. Trans.	1	---- ---	---- ---	2080 767
23-31-125	SILENCER, Steering Column Opening Cover				
	SY1	1	---- ---	---- ---	1767 102
23-31-145	WEATHERSTRIP, Cowl to Hood				
	SY1	1	---- ---	---- ---	1751 182
23-31-146	SEAL, Dash Panel to Fender Splash Shield				
	All	2	---- ---	2216 764	
23-31-205	SILENCER, Roof Panel				
	All, 1/2" x 25 1/2" x 67"	★	*1774 621	*1774 621	*1774 621
	Rear Extension Panel				
	Sp. 4 D., SY1-H	1	---- ---	---- ---	2086 702-3
23-32-0	**PANS, PLUGS AND BODY BUMPERS**				
23-32-8	PLATE and NUT, Center Floor Pan 2nd Seat Back Hinge Support				
	4 D. Sub.	1	2082 842-3		
23-32-15	PLUG or BUTTON, Floor Pan				
	1/2" Hole, SC1, SC2, SC3	★	2094 984	2094 984	2094 984
	1/2" Hole, SY1	★	---- ---	---- ---	2093 945
	1" Hole, SC1, SC2, SC3	★	2094 985	2094 985	2094 985
	7/8" Hole, SD3, SC1, SC2, SC3	★	---- ---	2094 631	2094 631
	1 3/4" Hole	★	2189 098	2189 098	2189 098
	2 1/2" Hole, SC1, SC2, SC3	★	2189 093	2189 093	2189 093
	2 1/2" Hole, SY1	★	---- ---	---- ---	1869 582

★ Indicates use as required.
⊟ Indicates parts not listed in any previous parts book.
Right and left part numbers are on same line, first number is right, second number is left.
* Indicates change or addition.

Printed in U.S.A.
Prices and specifications subject to change without notice.
March 8, 1963 Supersedes May 1, 1962.

MyMopar.com

CODE	PART NAME AND DESCRIPTION	PER CAR	VALIANT LANCER	PLYMOUTH DODGE	CHRYSLER IMPERIAL
23-32-0	**PANS, PLUGS AND BODY BUMPERS - Cont'd**				
23-32-17	CROSSMEMBER, Front Suspension				
	SP1, SD1 Complete	1	2260 609	2204 199	
	SP2, SD2	1	---- ---	2204 151	
	CROSSMEMBER and SPACER, Front Floor Pan Transmission Mounting				
	All	1	⊟2425 278		
	CROSSMEMBER, Front Side Rail Front Complete	1	---- ---	2204 167	
	CROSSMEMBER, Rear Floor Pan Rear Center	1	2081 016		
	CROSSMEMBER, Rear Floor Pan Rear Shock Absorber				
	SC1, SC2, SC3, except SD3	1	---- ---	*2188 048	*1883 342
	SD3	1	---- ---	*1883 342	
	CROSSMEMBER, Rear Floor Pan Rear, except SD3	1	---- ---	2166 051	
	CROSSMEMBER, Front Side Rail Torsion Bar Anchor, Complete	1	---- ---	2253 384	
	CROSSMEMBER, Rear Floor Pan Rear Except Sub., SD3, SC1, SC2, SC3 w/REINFORCEMENT	1	---- ---	1960 180	1960 180
	CROSSMEMBER, Rear Floor Pan Rear SD3, SC1, SC2, SC3	1	---- ---	1878 475	1878 475
	CROSSMEMBER, Front Floor Pan Rear SY1	1	---- ---	---- ---	1861 264
	CROSSMEMBER, Center Floor Pan Pinion Carrier Bumper				
	All, SD3, SC1, SC2, SC3	1	---- ---	1919 129	1919 129
	CROSSMEMBER and Upper STUD, Rear Floor Pan Rear				
	SD3, SC1, SC2, SC3	1	---- ---	⊟2253 586	⊟2253 586
	CROSSMEMBER, Bracket and Reinforcement, Front Side Rail Front				
	All	1	2253 731		
	CROSSMEMBER, Shock Absorber and Reforcements, Floor Pan Rear Center Pan	1	1973 206		
23-32-18	BOLT, Front Suspension Crossmember				
	1 7/8" length	4	2074 393	2074 393	
	1 1/4" length	★	2074 394	2074 394	
23-32-20	WASHER, Front Suspension Crossmember Bolt Lock	4	2074 386	2074 386	
23-32-22	PAN, Front Floor	1	2242 224	2165 810	
	SD3, SC1, SC2, SC3, w/Auto. 3 Speed Trans.	1	---- ---	2189 268	2189 268
	SD3, SC1, SC2, w/Std. Trans.	1	---- ---	*2189 268	*2189 268
23-32-24	PAN, Center Floor				
	Except Sub., except SD3	1	2081 029	2165 811	1861 001
	Sub., except SD3	1	2082 892	2165 811	1861 001
	SD3	1	---- ---	1861 001	---- ---
23-32-25	EXTENSION, Center Floor Pan Front	1	---- ---	⊟2422 850-1	
23-32-27	REINFORCEMENT, Front Floor Pan Seat Guide				
	All Front	1	2081 808-9	2166 082-3	
	Rear	1	2081 810-1	2166 084-5	
	REINFORCEMENT, Front Floor Pan Seat Attaching				
	Sp. Cl. Cp., Cv. Cp., SP2-P, SD2-P, SC2-M				
	Front	1	---- ---	2252 284-5	2252 294-5
	Rear	1	---- ---	2252 286-7	
	Sp. Cl. Cp., Cv. Cp., SC2-M				
	Rear	2	---- ---	---- ---	2252 296
	REINFORCEMENT, Front Floor Pan Seat Track				
	SD3, SC1, SC2, SC3 Front	1	---- ---	1960 198-9	1960 198-9
	Rear	1	---- ---	1960 200-1	1960 200-1
23-32-29	FILLER, Front Floor Pan Gearshift				
	SP2, SD2, w/413 cu. in. Eng.	1	---- ---	⊟2255 704	

★ Indicates use as required.
⊟ Indicates parts not listed in any previous parts book.
March 8, 1963 Supersedes May 1, 1962.

Printed in U.S.A.
Prices and specifications subject to change without notice.
Right and left part numbers are on same line, first number is right, second number is left.
* Indicates change or addition.

MyMopar.com

CODE	PART NAME AND DESCRIPTION	PER CAR	VALIANT LANCER	PLYMOUTH DODGE	CHRYSLER IMPERIAL
23-32-0	**PANS, PLUGS AND BODY BUMPERS - Cont'd**				
23-32-30	REINFORCEMENT, Front Floor Pan Transmission Cover Filler				
	SP2, SD2, 413 cu. in. Eng.	1	---- ---	⊟2422 450	
23-32-31	BRACE, Front Crossmember to Front Suspension Crossmember				
	All	1	---- ---	2401 041	
23-32-34	SPACER, Floor Pan Rear Side Rail Front	2	2081 566		
23-32-36	COVER, Fuel Gauge Inspection Hole				
	Sp. 4 D. Sub., SD3, SC1, SC3	1	---- ---	*1846 668	1846 668
23-32-40	BRACKET, Floor Pan Rear Seat Back Attaching				
	Cv. Cp.	2	---- ---	2254 097	
	BRACKET, Center Floor Pan Rear Suspension 2nd Seat Fastening				
	Sub., SD3, SC1, SC3	1	---- ---	1960 084-5	1960 084-5
23-32-46	PANEL, Floor Pan Cover				
	Sub. Center	1	2081 658	2251 902	
	PANEL, 2nd Seat Back Center Floor Pan Cover				
	Sub.	1	1959 649		
	PANEL, 2nd Seat Back to Rear Floor Pan Cover				
	Sub., SD3, SC1, SC3 Prime	1	---- ---	1878 636	1878 636
	PANEL, Rear and Center Floor Pan Insert				
	Sub. Prime	1	---- ---	2254 676	
23-32-48	PAN, Rear Floor				
	All	1	2242 217		
	Sub.	1	---- ---	2166 065	
	Except Sub.	1	---- ---	2251 483	
	Sub., SD3, SC1, SC3 Center, Rear	1	---- ---	*2093 702	2093 703
	Sub., SD3, SC1, SC3 Center, Front	1	---- ---	*2093 703	2093 702
	Sub., SD3, SC1, SC3 Rear	1	---- ---	*1861 041	1861 041
	Except Sub., SD3, SC1, SC2, SC3 Center	1	---- ---	1861 002	1861 002
	CENTER and SIDE PANS, Rear Floor				
	Sub., SD3, SC1, SC3	1	---- ---	1973 226	1973 226
	Sub., SD3, SC1, SC3, Spare Tire Compartment	1	---- ---	*1973 211	*1973 211
	All, SY1	1	---- ---	---- ---	1877 346
23-32-49	EXTENSION, Rear Floor Pan Side				
	All, w/CLIPS, BRACKETS and CROSSMEMBER				
	Right	1	2253 148		
	Left	1	2253 149		
	Sub., SC1, SC3, except SD3	1	---- ---	2251 526	1960 080-1
	Sub., SD3	1	---- ---	1960 080-1	
	Except Sub., SD3, SC1, SC2, SC3	1	---- ---	1861 048-9	1861 048-9
	All, SY1	1	---- ---	---- ---	1877 762-3
	PAN, Rear Floor Side				
	Sub., SC1, SC3	1	---- ---	---- ---	1877 830-1
23-32-50	BRACE, Rear Floor Pan Cover Panel at Tailgate Opening Sill Reinforcement				
	Sub., 2 Seater	2	---- ---	2254 666	
23-32-51	BUMPER, 2nd Seat Back Center Floor Pan Cover Panel				
	Sub.	2	2082 311		
	BUMPER, 2nd. Seat Back Center Floor Pan Cover Panel Frame				
	Sub.	2	2080 201		
	BUMPER, Center Floor Pan Cover Panel 2nd. Seat Back				
	Sub.	2	1526 206		

★ Indicates use as required.
⊟ Indicates parts not listed in any previous parts book.
Right and left part numbers are on same line, first number is right, second number is left.
* Indicates change or addition.

Printed in U.S.A.
Prices and specifications subject to change without notice.
March 8, 1963 Supersedes May 1, 1962.

MyMopar.com

CODE	PART NAME AND DESCRIPTION	PER CAR	VALIANT LANCER	PLYMOUTH DODGE	CHRYSLER IMPERIAL
23-32-0	**PANS, PLUGS AND BODY BUMPERS - Cont'd**				
23-32-51	BUMPER, Tailgate Opening Sill Panel to Rear Floor Pan Cover				
	Sub., SC1, SC3, except SD3	2	---- ---	2254 661	1380 060
	SD3	2	---- ---	1380 060	
	BUMPER, Tailgate Opening Sill Reinforcement Floor Pan Cover, 3 Seat				
	Sub.	2	---- ---	2255 231	
	BUMPER, Wheelhouse Rear Floor Pan Support to Rear Floor Pan Cover				
	Sub., SD3, SC1, SC3	2	---- ---	1380 060	1380 060
	BUMPER, Floor Pan Cover Panel Second Seat Back				
	Sub.	2	---- ---	2251 451	
23-32-53	REINFORCEMENT, Rear Floor Pan Extension				
	Sub.	1	---- ---	2252 332-3	
23-32-56	PANEL, Rear Floor Pan Cover Filler				
	Sub. Prime, Right	1	2259 258		
	Left	1	2259 259		
	COVER, Rear Floor Pan Tire Well				
	Sub., 2 Seater, SD3, SC1, SC3 Prime	1	---- ---	1878 889	1878 889
23-32-58	STRIKER, Rear Floor Pan Cover Lock Latch				
	Sub., except SD3 w/Locked Luggage Compartment	1	---- ---	2254 667	
	Sub., 2 Seater, SD3, SC1, SC3	1	---- ---	1960 476	1960 476
23-32-64	LATCH, Rear Floor Pan Cover Lock				
	Sub., 2 Seater, SD3, SC1, SC3	1	---- ---	1866 685	1866 685
23-32-65	HINGE, Rear Floor Pan Cover Panel 2 Seater	1	---- ---	2254 675	
	Sub., 2 Seater, SC1, SC3 Body Half	2	---- ---	---- ---	1878 170-1
	HINGE, Second Seat Back Center Floor Pan Cover Panel				
	Sub.	1	2082 830		
23-32-66	SPRING, Rear Floor Pan Cover Lock Latch				
	Sub., 2 Seater, SD3, SC1, SC2	1	---- ---	1866 682	1866 682
23-32-67	SUPPORT, Wheelhouse Rear Floor Pan Cover Compartment				
	Sub., SD3, SC1, SC3	2	---- ---	1878 014	1878 014
23-32-69	T/PLATE, Center Floor Pan Cover Panel Hinge				
	Sub.	1	---- ---	2251 569	
	T/PLATE, Wheel House Rear Floor Pan Cover Support				
	Sub.	2	---- ---	---- ---	2189 290
23-32-70	REINFORCEMENT, Rear Floor Pan Rear Center				
	Except Sub.	1	---- ---	2166 935	
	REINFORCEMENT, Rear Floor Pan Cover Panel Side Floor Pan				
	Sub., 2 Seater	1	---- ---	2254 664-5	
	REINFORCEMENT, Rear Floor Pan to Center Pan				
	Sub., SD3, SC1, SC3	1	---- ---	1961 325	1961 325
	REINFORCEMENT, Front Floor Pan to Center Floor Pan				
	SD3	1	---- ---	---- ---	*2422 849
23-32-73	PIN, Floor Pan Cover Hinge				
	Sub., SD3, SC1, SC3	★	---- ---	1960 627	1960 627
	PIN, Rear Floor Pan Cover Panel Prop Rod				
	Sub., 2 Seater	1	---- ---	893 923	

★ Indicates use as required.
⊟ Indicates parts not listed in any previous parts book.
March 8, 1963 Supersedes May 1, 1962.

Printed in U.S.A.
Prices and specifications subject to change without notice.
Right and left part numbers are on same line, first number is right, second number is left.
* Indicates change or addition.

MyMopar.com

CODE	PART NAME AND DESCRIPTION	PER CAR	VALIANT LANCER	PLYMOUTH DODGE	CHRYSLER IMPERIAL
23-32-0	**PANS, PLUGS AND BODY BUMPERS - Cont'd**				
23-32-75	BRACKET, Rear Floor Pan Cover Lock Latch Sub., 2 Seater, SD3, SC1, SC2	1	---- ---	1866 683	1866 683
23-32-77	BOLT, Rear Floor Pan Cover Lock Latch Bracket Sub., 2 Seater, SD3, SC1, SC3	2	---- ---	1883 654	1883 654
23-32-79	BRACKET, Rear Floor Pan Cover Panel Release Handle				
	Sub. w/Locked Luggage Compartment	1	---- ---	2251 433	
	BRACKET, Rear Floor Pan Cover Prop Rod Pivot				
	Sub., 2 Seater, SD3, SC1, SC3	1	---- ---	1432 929	1432 929
	w/RETAINER	1	---- ---	1960 689	1960 689
	BRACKET and RETAINER, Rear Floor Pan Cover Panel Prop Rod				
	Sub., 2 Seater	1	---- ---	2254 810	
23-32-80	HANDLE, Rear Floor Pan Cover Panel Release				
	Sub., except SD3 w/Locked Luggage Compartment, Prime	1	---- ---	2251 680	
	Sub., SC1, SC3, 2 Seater Chrome	1	---- ---	---- ---	1833 596
23-32-82	ESCUTCHEON, Rear Floor Pan Cover Lift Handle				
	Sub., 2 Seater, SD3, SC1, SC3				
	Prime	1	---- ---	1775 814	1775 814
	Chrome	1	---- ---	---- ---	1833 597
	BEZEL, Rear Floor Pan Cover Panel Grip				
	Sub. w/Locked Luggage Compartment	1	---- ---	2252 183	
23-32-83	PLUG, Quarter Panel Inner				
	Cl. Sed., Sp.Cl.Cp., Cv.Cp., Sub.	1	---- ---	2254 998-9	
23-32-86	STUD and RETAINER, Rear Floor Pan				
	Except Sub.	2	---- ---	2082 987	
23-32-87	SPRING, Rear Floor Pan Cover Panel Release				
	Sub. w/Locked Luggage Compartment	1	---- ---	2251 676	
	SPRING, Center Floor Pan Cover Panel Hinge				
	Sub.	3	---- ---	⊟2423 449	
23-32-88	ROD, Rear Floor Pan Cover				
	Sub.	1	---- ---	1960 061	1960 061
23-32-90	SUPPORT, Front Floor Pan No. 1 and No. 1A Body Hold Down Brace Bolt				
	SD3, SC1, SC2	1	---- ---	1878 136-7	1878 136-7
23-32-92	GUSSET, Center Floor Pan Rear Suspension Hanger Bracket Support to Rail				
	All Front	1	---- ---	2251 688-9	
	GUSSET, Center Floor Pan Rear Suspension Front Hanger Bracket Support to Sill				
	All	1	---- ---	2251 686-7	
23-32-93	SUPPORT, Center Floor Pan Rear Suspension Hanger Bracket				
	All, SC1, SC2, except SD3	1	---- ---	2251 684-5	1883 348-9
	SUPPORT and T/PLATE, Rear Floor Pan Rear Suspension Front Hanger Bracket	1	2081 004-5		
	SUPPORT, Center Floor Pan Rear Suspension Front Hanger Bracket				
	SC3	1	---- ---	---- ---	1883 320-1
	BRACKET and SUPPORT, Rear Floor Pan Rear Suspension Rear Hanger				
	Sub.	1	---- ---	*2253 108-9	
	Except Sub.	1	---- ---	*2253 106-7	

★ Indicates use as required.
⊟ Indicates parts not listed in any previous parts book.
Right and left part numbers are on same line, first number is right, second number is left.
* Indicates change or addition.

Printed in U.S.A.
Prices and specifications subject to change without notice.
March 8, 1963 Supersedes May 1, 1962.

MyMopar.com

CODE	PART NAME AND DESCRIPTION	PER CAR	VALIANT LANCER	PLYMOUTH DODGE	CHRYSLER IMPERIAL
23-32-0	**PANS, PLUGS AND BODY BUMPERS - Cont'd**				
23-32-93	BRACKET and REINFORCEMENT, Floor Pan Rear Suspension Front Hanger				
	All	1	1973 232-3		
	SUPPORT and TAPPING PLATE, Rear Floor Pan Rear Suspension Hanger Bracket				
	SD2, SC1, SC2, SC3	1	---- ---	1878 236-7	1878 236-7
	SUPPORT, Center Floor Pan Rear Suspension Front Hanger Bracket				
	SD3, SC1, SC2	1	---- ---	1883 348-9	1883 348-9
	BRACKET and SUPPORT, Rear Floor Pan Rear Suspension Rear Hanger				
	Sub.	1	---- ---	2253 108-9	
	Except Sub.	1	---- ---	2253 106-7	
23-32-98	PLUG, Dash Panel	1	1963 755	2254 626	1963 755
	All w/Auto. 3 Speed Trans., Clutch Hole	1	---- ---	2254 110	
	PLUG, Dash Panel to Fender Splash Shield	2	---- ---	2216 765	
23-32-99	SNAP RING, Rear Floor Pan Cover Panel Release				
	Sub. w/Locked Luggage Compartment	1	---- ---	1322 503	
23-32-104	BOLT, Rear Floor Pan Cover Panel Hold-Down and Spare Wheel Anchor	1	6023 175		
23-32-105	RAIL and Front Bumper Attaching REINFORCEMENT, Front Floor Pan Side	1	---- ---	2253 372-3	
	RAILS, Inner and Outer Side, Rear Floor Pan				
	Sub., SD3, SC1	1	---- ---	1973 312-3	1973 312-3
	Except Sub., SC3	1	---- ---	---- ---	1973 308-9
	RAIL and REINFORCEMENT, Front Floor Pan Front Side				
	All (also specify 1 of 2081 060-1 Reinforcement)	1	*2425 414-5		
	RAILS, Rear Floor Pan Inner and Outer Side				
	Except Sub. SD3, SC1, SC2	1	---- ---	1973 304-5	1973 304-5
	RAIL and SPACER, Rear Floor Pan Side				
	Sub.	1	---- ---	2253 096-7	
	Except Sub.	1	---- ---	2253 084-5	
	RAIL and BRACKET, Floor Pan Inner and Outer				
	All	1	2253 818-9		
23-32-106	RETAINER, Rear Floor Pan Cover Panel				
	All Prime	1	2259 173		
	RETAINER, Wheelhouse Inner Rear Floor Pan Cover Support Tapping Plate				
	Sub., SD3, SC1, SC3	2	---- ---	1960 496	1960 496
	RETAINER, Inner Wheel House 3rd Seat Bottom Hinge Tapping Plate				
	Sub., SD3, SC1, SC3	2	---- ---	1960 496	1960 496
23-32-107	BRACKET and HINGE, Rear Floor Pan Cover Panel				
	Sub.	2	2259 380		
23-32-108	BRACKET, Front Side Rail Front Suspension Upper Control Arm Mounting	1	2081 840-1	2204 184-5	
23-32-109	BRACKET, Center Floor Pan Pinion Carrier Bumper	1	2081 013		

★ Indicates use as required.
⊟ Indicates parts not listed in any previous parts book.
March 8, 1963 Supersedes May 1, 1962.

Printed in U.S.A.
Prices and specifications subject to change without notice.
Right and left part numbers are on same line, first number is right, second number is left.
* Indicates change or addition.

MyMopar.com

CODE	PART NAME AND DESCRIPTION	PER CAR	VALIANT LANCER	PLYMOUTH DODGE	CHRYSLER IMPERIAL
23-32-0	**PANS, PLUGS AND BODY BUMPERS - Cont'd**				
23-32-110	SHIELD, Front Suspension Crossmember to Front Side Rail Splash				
	All Left	1	2260 469		
	SP1, SD1	1	---- ---	2260 472-3	
	SP2, SD2, Front Rail Lower	2	---- ---	2260 465	
	SHIELD, Front Side Rail Lower Splash				
	All Left	1	---- ---	*2405 041	
23-32-112	REINFORCEMENT, Center Floor Pan and Inner Sill to Rear Side Rail and Spring Hanger Bracket				
	All	1	---- ---	2254 618-9	
	REINFORCEMENT, Center Floor Pan Rear Suspension Front Hanger Bracket Support				
	All	1	---- ---	2252 302-3	
23-32-114	BRACKET, Front Floor Pan to Inner Sill and Front Reinforcement to Front Side Rail				
	Cv. Cp.	1	---- ---	2254 620-1	
23-32-115	REINFORCEMENT, Front Side Rail	1	2081 058-9	2204 170-1	
	W/Radiator Yoke BRACKET	1	---- ---	2253 382-3	
	REINFORCEMENT, Front Side Rail to Side Sill Inner				
	All	1	*2081 060-1		
23-33-0	**INSTRUMENT PANEL**				
23-33-10	BRACE, Instrument Panel Lower Reinforcement to Cowl Plenum Chamber				
	Upper	1	2083 000		
	Lower	1	2083 049		
	BRACE, Instrument Panel Lower Reinforcement to Steering Column Clamp	1	---- ---	2216 933	
	BRACE, Instrument Panel Lower Reinforcement to Windshield Wiper Motor Bracket	1	---- ---	2162 538	
	BRACE, Instrument Panel Lower Reinforcement to Pedal Bracket				
	SC1, SC2, SC3	1	---- ---	---- ---	1901 802
	BRACE, Instrument Panel Lower Reinforcement to Windshield Frame				
	SD3, SC1, SC2, SC3	1	---- ---	2080 899	2080 899
	BRACE, Instrument Panel Lower Reinforcement to Windshield Wiper Motor Mounting				
	SY1	1	---- ---	---- ---	2292 327
	BRACE, Instrument Panel to Windshield Wiper Mounting Bracket				
	SC1, SC2, SC3	1	---- ---	---- ---	2080 649
23-33-12	COVER, Instrument Panel Radio Opening,				
	Except SD3	1	2162 456	2162 369	
	NUT	2	---- ---	6006 264	
	SD3	1	---- ---	1901 789	
	SC1, SC2, SC3	1	---- ---	---- ---	2162 145
	STUD	2	---- ---	---- ---	6008 039
	SY1	1	---- ---	---- ---	1901 811
	SY1 Knob Hole Cover	2	---- ---	---- ---	2080 058
	STUD	2	---- ---	---- ---	6010 020
23-33-20	COVER, Instrument Panel Clock Opening				
	SP1, SP2	1	---- ---	2256 369	
	SD1, SD2	1	---- ---	2258 251	
	SC1, SC2, SC3	1	---- ---	---- ---	2162 649
23-33-26	BEZEL, Instrument Panel Fresh Air Door Control				
	SD3 Prime	1	---- ---	2161 135	

★ Indicates use as required.
⊟ Indicates parts not listed in any previous parts book.
Right and left part numbers are on same line, first number is right, second number is left.
* Indicates change or addition.

Printed in U.S.A.
Prices and specifications subject to change without notice.
March 8, 1963 Supersedes May 1, 1962.

MyMopar.com

CODE	PART NAME AND DESCRIPTION		PER CAR	VALIANT LANCER	PLYMOUTH DODGE	CHRYSLER IMPERIAL
23-33-0	**INSTRUMENT PANEL - Cont'd**					
23-33-42	GRILLE, Instrument Panel Radio Speaker,					
	Except SD3	Medium Gray	1	---- ---	*2273 043	
		Medium Blue	1	---- ---	⊟2273 040	
		Medium Green	1	---- ---	⊟2273 041	
		Medium Cocoa	1	---- ---	⊟2273 042	
		Red	1	---- ---	⊟2273 044	
		Black	1	---- ---	⊟2297 072	
	SD3	Black	1	---- ---	2174 644	
	SD3	Blue	1	---- ---	*2180 188	
	SD3	Cocoa	1	---- ---	*2180 189	
		w/FRAME, Black	1	2249 265		
	SC1, SC2, SC3	w/o Air Conditioning	1	---- ---	---- ---	2162 129
	SY1	w/o Air Conditioning	1	---- ---	---- ---	2161 162
		w/Air Conditioning	1	---- ---	---- ---	2161 616
23-33-44	NAMEPLATE, Dummy Switch					
	SY1		2	---- ---	---- ---	2197 511
23-33-65	COVER, Instrument Panel Defroster Opening Cover					
	SD3, SC1, SC2, SC3		2	2082 340	2080 238	2080 238
23-33-86	MOULDING, Instrument Panel					
	SD3	w/Trim Pad	1	2162 424-5	2161 769	
	CLIP		6	6000 946		
	Except SD3	Horizontal	1	---- ---	2161 910-11	
	CLIP		4	---- ---	6000 976	
	T/BOLT		7	---- ---	6000 969	
	SD3	Horizontal	1	---- ---	2217 656	
	SD3	Finish Plate, Horizontal	1	---- ---	2217 656	
	SD3	Finish Plate, Horizontal, End	1	---- ---	1902 310-11	
	SC1, SC2, SC3	Controls Face Plate, Right	1	---- ---	---- ---	2162 143
		Left	1	---- ---	---- ---	1839 695
	SC1, SC2, SC3	Hood	1	---- ---	---- ---	2161 834
	SC1, SC2, SC3	Hood Trim Pad	1	---- ---	---- ---	2080 362
23-33-96	NAME PLATE, Instrument Panel					
	Sp. Cl. Cp., SL1-P	GT	1	2216 757		
		Dart-330	1	---- ---	2292 220	
		Dart-440	1	---- ---	2292 221	
		Imperial	1	---- ---	---- ---	2161 174
		LeBaron	1	---- ---	---- ---	2161 175
	NUT		3	---- ---	---- ---	6010 226
	SD2-P, Trim Pad	Polara 500	1	---- ---	2216 834	
	NUT		1	---- ---	9415 250	
	MEDALLION, Radio Speaker Grille					
	SV		1	2259 031		
	NUT		2	1839 995		
23-33-101	BEZEL, Instrument Panel Parking Sprag Control					
	SP1, SP2		1	2258 481	2162 776	
23-33-102	COVER, Instrument Panel Sprag Control					
	SP1, SP2	Prime	1	---- ---	2162 777	
23-33-103	GASKET, Instrument Panel Parking Sprag Control Cover or Bezel					
	SP1, SP2		1	---- ---	2162 802	
23-33-109	PANEL, Instrument					
	All		1	2253 158		
	SP1, SP2		1	---- ---	2161 917	
	SD1, SD2		1	---- ---	2162 231	
	SD3		1	---- ---	2161 529	
	SC1, SC2, SC3	w/o Air Conditioning	1	---- ---	---- ---	2162 650
	SC1, SC2, SC3	w/Air Conditioning	1	---- ---	---- ---	2161 804
	SY1		1	---- ---	---- ---	2161 440
	EXTENSION, Instrument Panel End					
	SY1	Right	1	---- ---	---- ---	2080 940
		Left	1	---- ---	---- ---	2161 552

★ Indicates use as required.
⊟ Indicates parts not listed in any previous parts book.
March 8, 1963 Supersedes May 1, 1962.

Printed in U.S.A.
Prices and specifications subject to change without notice.
Right and left part numbers are on same line, first number is right, second number is left.
* Indicates change or addition.

MyMopar.com

CODE	PART NAME AND DESCRIPTION	PER CAR	VALIANT LANCER	PLYMOUTH DODGE	CHRYSLER IMPERIAL
23-33-0	**INSTRUMENT PANEL - Cont'd**				
23-33-110	BOLT, Instrument Panel Pillar Bracket to Pillar				
	SY1	2	---- ---	---- ---	6008 245
23-33-129	HOOD, Instrument Panel Instrument				
	SC1, SC2, SC3 Upper	1	---- ---	---- ---	1839 689
	Lower	1	---- ---	---- ---	2162 234
	HOOD, Instrument Panel Instrument Housing				
	SP1, SP2 Black	1	---- ---	⊟2249 911	
	SP1, SP2 Dark Blue	1	---- ---	2273 445	
	SP1, SP2 Red	1	---- ---	2273 449	
	SP1, SP2 Cordovan	1	---- ---	⊟2249 910	
	SP1, SP2 Green	1	---- ---	2273 446	
	HOOD, Instrument Panel Speedometer				
	SD3 Prime	1	---- ---	2080 704	
23-33-132	CAP, Steering Column to Cluster				
	SC1, SC2, SC3	1	---- ---	---- ---	1971 522
	COVER, Instrument Panel Steering Column Opening				
	SC1, SC2, SC3, except SD3	1	---- ---	2273 320	1902 091
	SC1, SC2, SC3 Police Only	1	---- ---	---- ---	2291 821
	SD2-P, Sp. Cl. Cp., Cv. Cp. Black	1	---- ---	⊟2297 070	
	SD2 Green	1	---- ---	⊟2273 318	
	SP-L, SD1, SD2 Cocoa	1	---- ---	⊟2273 319	
	SD1, SD2 Red	1	---- ---	⊟2273 321	
	SP-L, SD1, SD2 Blue	1	---- ---	⊟2273 317	
	FILLER, Instrument Panel Steering Column Opening				
	SD3	1	---- ---	1902 399	
23-33-135	FINISH PLATE, Instrument Panel Controls				
	SP1, SP2 Center, w/Radio	1	---- ---	2162 357	
	SP1, SP2 Center w/o Radio	1	---- ---	2162 356	
	SP1, SP2, SC1, SC2, SC3	1	---- ---	2161 908-9	2162 646-7
	SY1 Right	1	---- ---	---- ---	2161 489
	Left	1	---- ---	---- ---	2161 528
	SD3 Right	1	---- ---	2161 570	
	Left	1	---- ---	2217 837	
	SD3 Fresh Air Door	1	---- ---	2161 493	
23-33-147	COVER, Instrument Panel Right End Extension				
	SY1	1	---- ---	---- ---	2080 942
23-33-209	SLEEVE NUT, Instrument Panel Gear Selector Mounting Bracket w/Auto. 3 Speed Trans.	3	---- ---	2217 097	
23-33-213	BRACKET, Instrument Panel Gear Selector Mounting				
	SP1, SP2 w/Auto. 3 Speed Trans.	1	---- ---	2162 488	
	SD1, SD2 w/Auto. 3 Speed Trans.	1	---- ---	2162 489	
	SD3	1	---- ---	*2161 136	
	SY1	1	---- ---	---- ---	2161 158
	BRACKET, Transmission Push Button Control Box Mounting	1	2257 905		
	PLATE, Gearshift Control Housing Mounting				
	SD3, SY1	1	---- ---	2200 490	2200 490
23-33-217	HOUSING, Instrument Panel Gear Selector Control				
	SC1, SC2 w/Std. Trans.	1	---- ---	---- ---	*2162 294
	BEZEL, Instrument Panel Gear Selector				
	SC1, SC2, SC3 w/Std. Trans.	1	---- ---	---- ---	*2217 505
	SC1, SC2, SC3 w/Auto. Trans.	1	---- ---	---- ---	*2217 504
	SY1	1	---- ---	---- ---	*2161 156
23-33-220	COVER PLATE, Instrument Housing Push Button Control Opening				
	SL w/o Heater or Air Conditioning	1	2257 942-3		
	NUT	4	6023 120		

★ Indicates use as required.
⊟ Indicates parts not listed in any previous parts book.
Right and left part numbers are on same line, first number is right, second number is left.
* Indicates change or addition.

Printed in U.S.A.
Prices and specifications subject to change without notice.
March 8, 1963 Supersedes May 1, 1962.

MyMopar.com

CODE	PART NAME AND DESCRIPTION	PER CAR	VALIANT LANCER	PLYMOUTH DODGE	CHRYSLER IMPERIAL
23-33-0	**INSTRUMENT PANEL - Cont'd**				
23-33-220	COVER PLATE, Instrument Housing Push Button Control Opening				
	SV w/Std. Trans., w/o Heater.	1	2257 944-5		
	NUT	4	6023 120		
	PLATE, Instrument Cluster Trim				
	SD1, SD2 w/Auto. Trans., w/Heater and Air Conditioning	1	---- ---	2258 235	
	PLATE, Instrument Cluster Trim				
	SD1, SD2 w/Auto. Trans., w/o Heater and Air Conditioning.	1	---- ---	2258 236	
	FINISH PLATE, Instrument Panel Gear Selector and Heater Control				
	SD3	1	---- ---	2161 518	
	FINISH PLATE, Instrument Panel Gear, Selector				
	SD3 w/Auto. 3 Speed Trans., 5 Button	1	---- ---	2161 519	
	FINISH PLATE, Instrument Panel Gear Selector				
	SD3 Std. Trans.	1	---- ---	2161 492	
	BEZEL, Instrument Panel Gear Selector				
	SD3	1	---- ---	2161 134	
	PLATE, Instrument Cluster Trim				
	SD1, SD2 w/Std. Trans., w/Heater and Air Conditioning	1	---- ---	2258 237	
	PLATE, Instrument Cluster Trim				
	SD1, SD2 w/Std. Trans., w/o Heater and Air Conditioning	1	---- ---	2258 238	
	BEZEL, Instrument Panel Gear Selector Control				
	SC1, SC2, SC3 w/Auto. Trans.	1	---- ---	---- ---	1839 691
23-33-227	PAD, Instrument Panel Gear Selector				
	SC1, SC2, SC3 w/Auto. 3 Speed Trans. . .	1	---- ---	---- ---	2080 388
	SY1	1	---- ---	---- ---	2161 707
	GASKET, Trans. Push Button Control	1	2257 876		
	GASKET, Instrument Bezel Transmission Push Button				
	SP1, SP2	1	---- ---	⊟2291 829	
	GASKET, Gearshift Control Slide Button Cover				
	SD1, SD2	1	---- ---	2208 187	
	PAD, Instrument Panel Push Button Control				
	SD3 Heater Side	1	---- ---	2161 606	
	SD3 Trans. Side	1	---- ---	2161 606	
23-33-231	BEZEL, Parking Brake Release Pull Rod	1	2071 130		
	BEZEL, Parking Brake Pedal Release Knob				
	SP1, SP2	1	---- ---	2071 159	
	SD1, SD2	1	---- ---	2256 616	
23-33-236	NUT, Parking Brake Release Rod Bezel,				
	SP1, SP2	1	---- ---	2401 314	
	SD1, SD2	1	---- ---	2071 146	
23-33-240	GROMMET, Trans. Push Button Control Box Mounting Bracket	3	2258 277		
	GROMMET, Instrument Panel Gear Selector Mounting Bracket w/Auto 3 Speed Trans. . . .	3	---- ---	2161 522	
	GROMMET, Gearshift Control Hsg. Mounting Plate Stud				
	SY1	4	---- ---	---- ---	2161 522
23-33-245	BUSHING, Parking Brake Release Pull Rod Bezel	1	2260 223		
23-33-247	SLEEVE NUT, Transmission Push Button Control Box Mounting Bracket Mounting	3	2291 408		

★ Indicates use as required.
⊟ Indicates parts not listed in any previous parts book.

Printed in U.S.A.
Prices and specifications subject to change without notice.
Right and left part numbers are on same line, first number is right, second number is left.
* Indicates change or addition.

MyMopar.com

CODE	PART NAME AND DESCRIPTION	PER CAR	VALIANT LANCER	PLYMOUTH DODGE	CHRYSLER IMPERIAL
23-34-0	**BODY PANELS**				
23-34-10	COVER, Tailgate Sill Panel Latch Opening				
	Sub.	1	--- ----	2254 801	
23-34-13	BRACKET, Wheelhouse Inner and Outer to Fuel Tank Stone Deflector				
	Sub., SD3, SC1, SC3	2	---- ---	1961 131	1961 131
23-34-16	PANEL, Tailgate Opening Sill				
	Sub., SC1, SC3, except SD3	1	2082 438	2251 477	1877 833
	Sub., SD3	1	---- ---	1877 833	
23-34-17	REINFORCEMENT, Tailgate Opening Sill				
	Sub., SD3, SC1, SC3	1	2081 209	1877 834	1877 834
	Sub., except SD3 w/FILLER	1	---- ---	2253 175	
23-34-20	DEFLECTOR, Quarter Panel Rear Inner Water				
	Cv. Cp., SD3, SC1, SC2	1	---- ---	2165 406-7	2165 406-7
23-34-21	PANEL, Wheelhouse Cap				
	Cv. Cp.	1	---- ---	2189 500-1	
23-34-22	SUPPORT, Wheelhouse Panel				
	Cl. Sed., Sp. Cl. Cp., 4 D., Sp. 4 D.				
	To Outer Gusset	1	---- ---	2166 940-1	
	To Inner Gusset	1	---- ---	2166 942-3	
23-34-24	FILLER, Wheelhouse to Rear Pillar Panel				
	Sub.	1	---- ---	2251 830-1	
23-34-26	PANEL, Wheelhouse to Rear Pillar				
	Sub., SC1, SC3, except SD3	1	---- ---	2251 586-7	1960 090-1
	Sub., SD3	1	---- ---	1960 090-1	
23-34-27	PANEL, Wheelhouse				
	All Outer	1	2081 158-9		
	Except Sub. Inner, Right	1	2244 942		
	Except Sub. Inner, Left	1	2081 163		
	Cv. Cp. Inner	1	---- ---	2166 258-9	
	SC1, SC2 Outer	1	---- ---	2166 192-3	1950 348-9
	Sub., SC1, SC3, except SD3				
	Inner	1	---- ---	*2165 832-3	*1861 062-3
	Outer	1	---- ---	2165 830-1	
	Cl. Sed., Sp. Cl. Cp., 4 D., Sp. 4 D.				
	Inner	1	---- ---	2165 828-9	
	Outer	1	---- ---	2165 826-7	
	Sp. Cl. Cp., 4 D., Sp. 4 D., SD3, SC1, SC2, SC3				
	Inner	1	---- ---	1869 748-9	1869 748-9
	Sp. Cl. Cp., 4 D., Sp. 4 D., SD3, SC1, SC2, SC3				
	Outer	1	---- ---	1869 744-5	1869 744-5
	Sub., SD3, SC1, SC3 Right	1	---- ---	1861 056	1861 056
	Left	1	---- ---	2188 769	2188 769
	Sp. Cl. Cp., 4 D., Sp. 4 D., SD3, SC1, SC2, SC3				
	Complete	1	---- ---	2084 524-5	2084 524-5
	Cv. Cp., SY1 Complete	1	---- ---	---- ---	2084 528-9
	Sp. Cl. Cp., Sp. 4 D., SY1				
	Complete	1	---- ---	---- ---	2084 526-7
	Cv. Cp., SD3, SC1, SC2				
	Inner	1	---- ---	1869 752-3	1869 752-3
	Cv. Cp., SD3, SC1, SC2				
	Outer	1	---- ---	1950 348-9	1950 348-9
23-34-40	PLUG, Quarter Panel Tailgate Window Switch Hole				
	Sub.	1	---- ---	2254 795	
	PLUG, Wheelhouse Outside Panel				
	All	1	---- ---	2189 098	2189 098

★ Indicates use as required.
B Indicates parts not listed in any previous parts book.
Right and left part numbers are on same line, first number is right, second number is left.
* Indicates change or addition.

Printed in U.S.A.
Prices and specifications subject to change without notice.
March 8, 1963 Supersedes May 1, 1962.

MyMopar.com

CODE	PART NAME AND DESCRIPTION	PER CAR	VALIANT LANCER	PLYMOUTH DODGE	CHRYSLER IMPERIAL
23-34-0	**BODY PANELS - Cont'd**				
23-34-80	PANEL, Cowl Side				
	All Complete	1	2259 052-3		
	Cv. Cp., SC1, SC3, except SD3	1	---- ---	2253 072-3	1952 946-7
	Except Cv. Cp., except SD3	1	---- ---	2253 070-1	
	Cv. Cp., SD3 Right	1	---- ---	1952 946	
	Left	1	---- ---	2216 504	
	Except Cv. Cp., SD3, SC1, SC2, SC3				
	Right	1	---- ---	1909 324	1909 324
	Left	1	---- ---	2253 467	2253 467
	SY1 Less Extensions	1	---- ---	---- ---	2275 907-8
	PANEL, Cowl Top and Dash				
	Except SD3 Complete	1	2253 348	2298 746	
	PANEL, Cowl Top and Dash, Complete				
	SD3, SC1, SC2, SC3	1	---- ---	2253 235	2253 235
	WINDSHIELD FRAME, Complete				
	Cv. Cp., SY1	1	---- ---	---- ---	2084 539
	Sp. Cl. Cp., Sp. 4 D., SY1	1	---- ---	---- ---	2084 538
23-34-85	COVER PACKAGE, Cowl Upper Panel to Front Pillar Joint				
	SY1	1	---- ---	---- ---	2196 479-80
	SCREW	2	---- ---	---- ---	9413 268
23-34-100	FILLER, Cowl Side to Door at Belt				
	SY1	1	---- ---	---- ---	2188 416-7
23-34-110	PANEL, Dash				
	SY1	1	---- ---	---- ---	2189 277
23-34-116	COVER, Dash Panel Air Duct Drain Hole,				
	SD3	2	1810 565	1810 565	1810 565
	COVER, Dash Panel Air Duct				
	SD3 w/o Heater	1	---- ---	1750 445	1750 445
	SY1 w/Heater	1	---- ---	---- ---	2216 902
23-34-120	PANEL, Front Door Outside Repair				
	4 D., 4 D. Sub., SV	1	2082 646-7		
	Cl. Sed., SV	1	1919 332-3		
	Sp. Cl. Cp., SV	1	1919 490-1		
	4 D., 4 D. Sub., SL	1	2253 290-1		
	Cl. Sed., SL	1	2253 292-3		
	Sp. Cl. Cp., SL	1	2253 294-5		
	4 D., 4 D. Sub., except SD3	1	---- ---	2253 050-1	
	Sp. 4 D., except SD2-P, SD3	1	---- ---	2253 052-3	
	Sp. 4 D., SD2-P	1	---- ---	2425 214-5	
	Sp. Cl. Cp., Cv. Cp., SD3	1	---- ---	1867 682-3	
	Cl. Sed.	1	---- ---	2253 054-5	
	Sp. Cl. Cp., Cv. Cp.	1	---- ---	2253 776-7	
	Sp. 4 D., Sp. 4 D. Sub., SD3, SC1, SC2, SC3				
	Right		---- ---	*2165 236	*2165 236
	Left	1	---- ---	*2165 321	*2165 321
	Sp. Cl. Cp., Cv. Cp., SC1, SC2, except SD3	1	---- ---	---- ---	1884 680-1
	4 D., SD3, SC1, SC2, SC3	1	---- ---	2253 344-5	2253 344-5
	Sp. Cl. Cp., Cv. Cp., SY1	1	---- ---	---- ---	1961 384-5
	Sp. 4 D., SY1	1	---- ---	---- ---	1961 388-9
	PANEL, Rear Door Outside Repair				
	4 D., 4 D. Sub., SV, SL	1	2082 648-9	2253 040-1	
	Sp. 4 D.	1	---- ---	2253 046-7	
	Sp. 4 D., Sp. 4 D. Sub., SD3, SC1, SC2, SC3	1	---- ---	1950 636-7	1950 636-7
	4 D., SD3, SC1, SC2, SC3	1	---- ---	2253 346-7	2253 346-7
	Sp. 4 D., SY1	1	---- ---	---- ---	1961 412-3

★ Indicates use as required.
⊟ Indicates parts not listed in any previous parts book.
March 8, 1963 Supersedes May 1, 1962.

Printed in U.S.A.
Prices and specifications subject to change without notice.
Right and left part numbers are on same line, first number is right, second number is left.
* Indicates change or addition.

MyMopar.com

CODE	PART NAME AND DESCRIPTION	PER CAR	VALIANT LANCER	PLYMOUTH DODGE	CHRYSLER IMPERIAL
23-34-0	**BODY PANELS - Cont'd**				
23-34-121	SHIELD, Dash Panel to Front Fender	1	---- ---	2167 940-1	
23-34-122	BRACE and C/NUT, Dash Panel No. 1 and 1 A Body Hold-Down Bolt				
	SY1 Right	1	---- ---	---- ---	2189 128
	BRACE, Dash Panel Body Front Hold-Down				
	SD3, SC1, SC2	1	---- ---	1909 326-7	1909 326-7
23-34-123	PLUG, Dash Panel w/o Heater	★	1652 067	1777 881	
23-34-126	REINFORCEMENT, Dash Panel No. 1 and 1 A Body Hold-Down Bolt Brace				
	SY1	1	---- ---	---- ---	1861 248-9
23-34-136	COVER, Door Inside Panel Access Hole				
	SY1	2	---- ---	---- ---	1751 033
23-34-166	PANEL, Deck Opening Upper				
	Cl. Sed., Sp. Cl. Cp., 4 D.	1	2081 204		
	Cl. Sed., Sp. Cl. Cp., 4 D., Sp. 4 D., except SD3	1	---- ---	2166 261	
	Cv. Cp., SC1, SC2, except SD3	1	---- ---	2166 262	1869 636
	Sp. Cl. Cp., SD3, SC1, SC2	1	---- ---	2189 298	2189 298
	Sp. 4 D., SY1-H, Auxiliary	1	---- ---	---- ---	2189 369
	4 D., Sp. 4 D., SD3, SC1, SC2, SC3	1	---- ---	1909 316	1909 316
	Sp. Cl. Cp., SY1	1	---- ---	---- ---	1961 442
	Cv. Cp., SD3, SY1	1	---- ---	1869 636	1961 443
	Sp. 4 D., SY1	1	---- ---	---- ---	1961 444
23-34-167	PANEL, Deck Opening Lower				
	Except Sub., SP1, SP2, SY1	1	2081 205	2253 006	2189 875
	Except Sub., SD1, SD2, SD2-P	1	---- ---	2166 005	
	Except Sub., SD3, SC1, SC2, SC3	1	---- ---	1919 066	1919 066
	End, SD3, SC1, SC2, SC3	1	---- ---	2189 492-3	2189 492-3
23-34-170	BUMPER, Deck Opening Lower Panel License Insert				
	Except Sub., SP1, SP2	2	---- ---	729 152	
23-34-176	EXTENSION, Quarter Panel Deck Opening Side Flange to Wheel House Brace				
	Sp. Cl. Cp., SC1, SC2	1	---- ---	---- ---	2189 498-9
	EXTENSION, Deck Opening Lower Panel				
	SY1	1	---- ---	---- ---	1877 350-1
23-34-177	REINFORCEMENT, Quarter Panel Deck Opening Side Flange				
	Except Sub., SD3, SC1, SC2, SC3	1	---- ---	1964 340-1	1964 340-1
23-34-179	REINFORCEMENT, Deck Opening Upper or Lower Panel				
	Cv. Cp., SC1, SC2, except SD3				
	Upper	1	---- ---	2166 266	1882 393
	SD3 Upper	1	---- ---	1882 393	
	Cl. Sed., Sp. Cl. Cp., 4 D., Sp. 4 D.				
	Upper	1	---- ---	2166 265	
	Sp. Cl. Cp., SD3, SC1, SC2				
	Upper	1	---- ---	2189 299	2189 299
	Except Sub., except SD3				
	Lower	2	---- ---	2216 166	
	All, SY1 Lower	1	---- ---	---- ---	2093 925

★ Indicates use as required.
⊟ Indicates parts not listed in any previous parts book.
Right and left part numbers are on same line, first number is right, second number is left.
* Indicates change or addition.

Printed in U.S.A.
Prices and specifications subject to change without notice.
March 8, 1963 Supersedes May 1, 1962.

MyMopar.com

CODE	PART NAME AND DESCRIPTION	PER CAR	VALIANT LANCER	PLYMOUTH DODGE	CHRYSLER IMPERIAL
23-34-0	**BODY PANELS - Cont'd**				
23-34-184	LETTER, NAMEPLATE or MEDALLION, Deck Opening Lower Panel				
	NOTE: See Exterior Moulding Illustrations in Front of Group 23 Body.				
23-34-218	REINFORCEMENT, Quarter Outside Panel Lock Face				
	Sp. Cl. Cp.	1	2195 392-3		
23-34-225	COVER, Quarter Inside Panel Access Hole				
	Sp. Cl. Cp., Cv. Cp., SY1	2	---- ---	---- ---	1691 107
23-34-227	GUARD, Quarter Panel Rear Lower Dust				
	Sub., SD3, SC1, SC3	2	---- ---	2252 212	2252 212
23-34-228	RETAINER, Quarter Panel Rear Lower Dust Guard				
	Sub., SD3, SC1, SC3	2	---- ---	2188 745	2188 745
23-34-229	TIE PLATE, Quarter Panel to Wheelhouse to Side Sill Inner Panel				
	4 D., Sp. 4 D., Sub.	1	*2081 174-5	*2167 180-1	
23-34-233	PANEL, Quarter Outside Inner				
	Sp. Cl. Cp., SY1	1	---- ---	---- ---	2189 474-5
	Cv. Cp., SY1	1	---- ---	---- ---	2189 476-7
	Sp. 4 D., SY1	1	---- ---	---- ---	2189 478-9
23-34-234	PANEL, Quarter Inside				
	4 D.	1	2081 154-5		
	Sub. Upper	1	2243 540-1		
	Sub. Lower	1	2242 222-3		
	Cl. Sed., Sp. Cl. Cp., Rear	1	2195 676-7		
	Sub. Rear	1	---- ---	2166 184-5	
	Sub. Front	1	---- ---	2166 182-3	
	Cv. Cp., SC1, SC2, except SD3	1	---- ---	2251 604-5	1964 186-7
	Sp. Cl. Cp., Cl. Sed., except SD3	1	---- ---	2166 186-7	
	Sp. Cl. Cp., SD3, SC1, SC2	1	1919 436-7	1963 740-1	1963 740-1
	Cl. Sed.	1	2253 744-5		
	Cv. Cp., SD3, SY1	1	---- ---	1964 186-7	1751 002-3
	Sp. Cl. Cp., SY1	1	---- ---	---- ---	1751 000-1
23-34-235	PANEL, Quarter Outside Repair				
	4 D.	1	2081-150-1		
	Cl. Sed., Sp. Cl. Cp.	1	2195 380-1		
	Sub.	1	2242 226-7		
	Cl. Sed., SP1, SP2	1	---- ---	2253 854-5	
	Cl. Sed., SD1, SD2	1	---- ---	2253 858-9	
	Sp. Cl. Cp., SP1, SP2	1	---- ---	2253 852-3	
	Sp. Cl. Cp., SD1, SD2	1	---- ---	2253 856-7	
	Cv. Cp., SP1, SP2	1	---- ---	2166 176-7	
	Cv. Cp., SD1, SD2	1	---- ---	2166 180-1	
	4 D., Sp. 4 D., SP1, SP2	1	---- ---	2165 814-5	
	4 D., SP. 4 D., SD1, SD2	1	---- ---	2165 818-9	
	Sub., SD1, SD2	1	---- ---	2251 186-7	
	Sub., SP1, SP2	1	---- ---	2254 658-9	
	Sub., SP1, SP2	1	---- ---	2165 824-5	
	Sub., SD3, SC1, SC3 Upper	1	---- ---	2093 772-3	2093 772-3
	Sub., SD3, SC1, SC3 Lower	1	---- ---	2189 846-7	2189 846-7
	Cv. Cp., SD3, SC1, SC2	1	---- ---	2189 280-1	2189 280-1
	Sp. Cl. Cp., SD3, SC1, SC2	1	---- ---	2189 278-9	2189 278-9
	4 D., Sp. 4 D., SD3, SC1, SC2, SC3	1	---- ---	2189 282-3	2189 282-3
	Cv. Cp., Sp. Cl. Cp., SY1	1	---- ---	---- ---	2189 284-5
	Sp. 4 D., SY1	1	---- ---	---- ---	2189 288-9

★ Indicates use as required.
⊟ Indicates parts not listed in any previous parts book.

Printed in U.S.A.
Prices and specifications subject to change without notice.
Right and left part numbers are on same line, first number is right, second number is left.
* Indicates change or addition.

MyMopar.com

CODE	PART NAME AND DESCRIPTION	PER CAR	VALIANT LANCER	PLYMOUTH DODGE	CHRYSLER IMPERIAL
23-34-0	**BODY PANELS - Cont'd**				
23-34-236	EXTENSION, Quarter Inside Panel				
	Sp. Cl. Cp., SY1 Upper	1	---- ---	---- ---	1692 142-3
	Cv. Cp., SY1 Upper	1	---- ---	---- ---	1750 188-9
	Sub. To Rear Upper Pillar	1	---- ---	2254 608-9	
	EXTENSION and D/NUT, Quarter Inside Panel to Lock Pillar				
	Sp. Cl. Cp., Cv. Cp., SY1	1	---- ---	---- ---	⊟1810 204-5
23-34-238	NAME PLATE, Dodge Quarter Outside Panel				
	NOTE: See Exterior Moulding Illustrations in Front of Group 23 Body.				
23-34-240	DEFLECTOR PACKAGE, Quarter Panel Stone				
	NOTE: See Exterior Moulding Illustrations in Front of Group 23 Body.				
23-34-242	EXTENSION, Rear Quarter Outside Panel				
	Except Sub., SV Upper	1	2242 100-1		
	Except Sub., SV Lower	1	2242 104-5		
	Sub., SV Upper.	1	2242 102-3		
	Sub., SV Lower	1	2242 106-7		
	Except Sub., SL Upper	1	2195 052-3		
	Except Sub., SL Lower	1	2195 048-9		
	Sub., SL Upper	1	2195 054-5		
	Sub., SL Lower	1	2195 050-1		
	Sub., SP1, SP2	1	---- ---	2251 480-1	
	Sub., SP1, SP2 Upper	1	---- ---	2259 308-9	
	Except Sub., SP1, SP2 Rear	1	---- ---	2166 706-7	
	Sub., SD1, SD2 Upper	1	---- ---	2251 486-7	
	Sub., SD1, SD2 Lower	1	---- ---	2251 484-5	
	Except Sub., SD1, SD2 Rear Upper	1	---- ---	2166 784-5	
	Except Sub., SD1, SD2 Rear Lower	1	---- ---	2166 744-5	
	Sub., SD3, SC1, SC3 Rear Upper	1	---- ---	*2189 848-9	*2189 848-9
	Sub., SD3, SC1, SC3 Rear Lower	1	---- ---	*2093 776-7	*2093 776-7
	Except Sub., SD3, SC1, SC2, SC3 Rear Lower	1	---- ---	*2189 472-3	*2189 472-3
23-34-243	FILLER, Quarter Outside Panel Lower Extension				
	SV	1	2242 108-9		
	FILLER, Quarter Outside Panel Extension				
	Sub.	1	---- ---	2259 310-11	
23-34-246	REINFORCEMENT, Rear Quarter Panel to Rear Quarter Pillar				
	Cv. Cp.	1	---- ---	2254 624-5	
23-34-249	REINFORCEMENT, Quarter Inside Panel to Wheelhouse				
	Sp. Cl. Cp., SY1	1	---- ---	---- ---	1810 056-7
	REINFORCEMENT, Quarter Inside Panel to Folding Top Folding Filler Support				
	Cv. Cp., SD3, SC1, SC3	1	---- ---	*1954 094-5	*1954 094-5
23-34-253	DOOR, Fuel Tank Filler				
	All, SY1	1	---- ---	---- ---	2189 693
23-34-254	BUMPER, Quarter Panel Extension	2	2242 349		
23-34-255	SPRING, Fuel Tank Filler Door				
	SY1	1	---- ---	---- ---	1877 486
23-34-257	GUSSET, Quarter Belt Bar to Wheelhouse to Rear Quarter Pillar				
	Cv. Cp.	1	---- ---	2254 622-3	

★ Indicates use as required.
⊟ Indicates parts not listed in any previous parts book.
Right and left part numbers are on same line, first number is right, second number is left.
* Indicates change or addition.

Printed in U.S.A.
Prices and specifications subject to change without notice.
May 1, 1962 Supersedes Nov. 30, 1961.

MyMopar.com

CODE	PART NAME AND DESCRIPTION	PER CAR	VALIANT LANCER	PLYMOUTH DODGE	CHRYSLER IMPERIAL
23-34-0	**BODY PANELS - Cont'd**				
23-34-259	SEAL, Quarter Panel Fuel Tank Filler Tube				
	Sub.	1	2242 360	2123 656	
23-34-260	HINGE, Deck Opening Lower Panel Fuel Filler Door				
	All, SY1	1	---- ---	---- ---	2189 678-9
23-34-270	BUMPER, Fuel Tank Filler Door				
	All, SY1	1	---- ---	---- ---	1882 429
23-34-273	BRACKET, Deck Opening Lower Panel Fuel Tank Filler Door Stop				
	SY1	1	---- ---	---- ---	⊟2255 118
23-34-275	BUMPER, Quarter Outside Panel Jack Support				
	Except Sub., SD3, SC1, SC2, SC3	1	---- ---	*2189 694-5	*2189 694-5
23-34-277	STUD and RETAINER, Quarter Panel Rear Bumper Front Mounting	2	2082 080		
23-34-279	BRACKET, Rear Stone Deflector to Rear Floor Pan Attaching				
	4 D. Sub.	1	---- ---	2252 111	
23-34-280	FILLER, Quarter Outside Outer Panel Front Upper Corner				
	Sp. Cl. Cp., Cv. Cp.	1	---- ---	2216 322-3	
23-34-281	GASKET, Quarter Panel Back-Up Cover				
	Cl. Sed., Sp. Cl. Cp., 4 D., SD1-L, SD2-L SD1-M, SD2-M	2	---- ---	*2252 154	
23-34-283	COVER PLATE PACKAGE, Quarter Panel Back-Up Lamp Hole				
	Sub., SD1, SD2	1	---- ---	2298 585	
	J/NUT	3	---- ---	6023 111	
	SCREW	3	---- ---	9415 558	
	COVER, Back-Up Lamp Hole				
	Except Sub., SD1, SD2	2	---- ---	2252 088	
23-34-286	BRACKET, Rear Bumper Support Bar Jacking				
	Sub., SD3, SC1, SC3	1	---- ---	*1961 022-3	*1961 022-3
23-34-301	PANEL, Roof				
	Sub.	1	2082 431		
	Except Sub.	1	2081 230		
	Sub., SC1, SC3, except SD3	1	---- ---	*2165 836	*2188 713
	Cl. Sed., Sp. Cl. Cp., 4 D., Sp. 4 D., except SD3	1	---- ---	*2165 834	
	Sp. Cl. Cp., SD3, SC1, SC2	1	---- ---	*1861 118	*1861 118
	4 D., Sp. 4 D., SD3, SC1, SC2, SC3 w/Low Window	1	---- ---	*1867 873	*1867 873
	Sp. 4 D., SC1, SC2, SC3 w/High Window	1	---- ---	---- ---	2093 264
	Sp. Cl. Cp., SY1	1	---- ---	---- ---	2189 635
	Sp. 4 D., SY1-L, SY1-M	1	---- ---	---- ---	2189 502
	Sp. 4 D., SY1-H	1	---- ---	---- ---	2189 503
	Sub., SD3	1	---- ---	---- ---	*2188 713
23-34-302	EXTENSION, Roof Panel Side				
	Sub. Rear	1	2081 217		
	Sub., except SD3 Side	1	*2081 728-9	*2166 270-1	
	Sub. Side Rear	1	2081 730-1		
	Sub., SD3, SC1, SC3 Side	1	---- ---	*1861 222-3	*1861 222-3
	Sp. Cl. Cp., SD3, SC1, SC2 Lower	1	---- ---	*1878 444-5	*1878 444-5
	Sp. Cl. Cp., Cv. Cp., SY1				
	Sp. 4 D., SY1 Side Rear	1	---- ---	---- ---	2189 504-5
	Sp. Cl. Cp., SY1 Side Rear	1	---- ---	---- ---	*1877 742-3

★ Indicates use as required.
⊟ Indicates parts not listed in any previous parts book.
May 1, 1962 Supersedes Nov. 30, 1961.

Printed in U.S.A.
Prices and specifications subject to change without notice.
Right and left part numbers are on same line, first number is right, second number is left.
* Indicates change or addition.

MyMopar.com

CODE	PART NAME AND DESCRIPTION	PER CAR	VALIANT LANCER	PLYMOUTH DODGE	CHRYSLER IMPERIAL
23-34-0	**BODY PANELS - Cont'd**				
23-34-304	REINFORCEMENT, Roof Rear Extension Panel Sp. 4 D., SY1-H Lower	1	---- ---	---- ---	1961 513
23-34-334	MEDALLION, ORNAMENT or LOUVER, Quarter Panel				
	NOTE: See Exterior Moulding Illustrations in Front of Group 23 Body.				
23-34-340	BASE, Quarter Outside Panel Medallion				
	NOTE: See Exterior Moulding Illustrations in Front of Group 23 Body.				
23-34-342	SPACER, Quarter Panel Ornament Sp. Cl. Cp., Cv. Cp., 4 D., Sp. 4 D., SP1-H, SP2-H, SP2-P, SD1-H, SD2-H	★	---- ---	*2254 396	
	SEAL, Quarter Panel Outside Ornament Stud SD2-P	16	---- ---	2252 297	
23-34-346	BRACKET, Wheelhouse to Fuel Tank Stone Deflector Sub.	1	---- ---	2251 724	
	BRACKET, Wheelhouse Inner Panel Fuel Tank Stop Sub.	1	---- ---	2251 800	
23-34-354	PANEL, Windshield Header All	1	2082 530		
	Cv. Cp., SD3, SC1, SC2 w/REINFORCEMENT	1	---- ---	1963 627	1963 627
	Except Cv. Cp., SC1, SC2, SC3, except SD3 w/REINFORCEMENT	1	---- ---	1919 590	2253 804
	Except Cv. Cp., SD3 w/REINFORCEMENT	1	---- ---	2253 804	
23-36-0	**PILLARS**				
23-36-5	PILLAR, Body Center Sp. 4 D.	1	---- ---	2167 936-7	
	4 D., 4 D. Sub., except SD3	1	2259 154-5	2167 918-9	
	4 D., SD3, SC1, SC2, SC3	1	---- ---	1909 892-3	1909 892-3
	Sp. 4 D., Sp. 4 D. Sub., SD3, SC1, SC2, SC3 Complete	1	---- ---	1952 204-5	1952 204-5
	Sp. 4 D., SY1	1	---- ---	---- ---	1973 290-1
	Sp. 4 D., SY1 Inner	1	---- ---	---- ---	1861 286-7
23-36-6	PANEL, Center Pillar 4 D., Sub., Prime	1	---- ---	*2241 790-1	
	4 D., SD3, SC1, SC2, SC3	1	---- ---	1882 884-5	1882 884-5
23-36-14	EXTENSION, Front Hinge Pillar Cv. Cp., SY1	1	---- ---	---- ---	1960 726-7
	Sp. Cl. Cp., Sp. 4 D., SY1	1	---- ---	---- ---	1877 318-9
23-36-21	COVER, Center Pillar Hinge Sp. 4 D., SY1	4	---- ---	---- ---	1751 793
23-36-22	TAPPING PLATE, Body Center Front Pillar 4 D., SP. 4 D., Sub.	2	---- ---	1952 214	1952 214
	TAPPING PLATE, Body Lock Pillar Reinforcement Sp. Cl. Cp., Cv. Cp., SD3, SC1, SC2, SC3	2	---- ---	1952 214	1952 214
23-36-30	BUMPER, Body Center Pillar Rear Door Check 4 D., Sub.	2	2083 127		
23-36-31	SEAL, Body Center Pillar Top Sp. 4 D.	1	---- ---	2254 132-3	
	SEAL, Rear Upper Pillar 4 D. Sub.	2	---- ---	2251 905	

★ Indicates use as required.
⊟ Indicates parts not listed in any previous parts book.
Right and left part numbers are on same line, first number is right, second number is left.
* Indicates change or addition.

Printed in U.S.A.
Prices and specifications subject to change without notice.
March 8, 1963 Supersedes May 1, 1962.

MyMopar.com

CODE	PART NAME AND DESCRIPTION	PER CAR	VALIANT LANCER	PLYMOUTH DODGE	CHRYSLER IMPERIAL
23-36-0	**PILLARS - Cont'd**				
23-36-53	PILLAR, Body Lock, Rear				
	Cl. Sed. Upper	1	2195 252-3	2252 370-1	
	4 D., 4 D. Sub. Upper	1	2081 168-9		
	Sp. Cl. Cp., SD3, SC1, SC2	1	---- ---	1869 772-3	1869 772-3
	Cv. Cp., SD3, SC1, SC2	1	---- ---	1954 676-7	1954 676-7
	Sp. Cl. Cp., Cv. Cp., SY1	1	---- ---	---- ---	1877 314-5
	Sp. 4 D., SY1	1	---- ---	---- ---	1877 310-1
	4 D., Sp. 4 D., Sub., SD3, SC1, SC2, SC3	1	---- ---	1964 496-7	1964 496-7
	Sp. Cl. Cp., Cv. Cp., SY1, w/TAPPING PLATE and COVERS	1	---- ---	---- ---	1919 024-5
23-36-66	REINFORCEMENT, Body Lock Pillar				
	Cl. Sed. Upper	1	2195 254-5		
	Cl. Sed., Sp. Cl. Cp., Cv. Cp. w/Tapping PLATE, Lower	1	---- ---	2253 224-5	
	Sp. Cl. Cp., Cv. Cp., SY1	1	---- ---	---- ---	1690 440-1
	Sp. Cl. Cp., Cv. Cp., SD3, SC1, SC2 Upper	1	---- ---	1950 220-1	1950 220-1
	REINFORCEMENT, Rear Body Lock Pillar				
	4 D., 4 D. Sub.	1	*2081 176-7		
	REINFORCEMENT, Body Front Pillar Upper to Roof Side Drain Trough				
	Sp. Cl. Cp.	1	2195 562-3		
23-36-73	COVER, Lock Pillar Hole Edge				
	Sp. Cl. Cp., Cv. Cp., SY1 Outer	1	---- ---	---- ---	1810 586-7
	Sp. Cl. Cp., Cv. Cp., SY1 Inner	1	---- ---	---- ---	1810 446-7
23-36-118	PILLAR, Body Rear				
	Sub. Upper	1	1973 360-1		
	Sub. Lower	1	1973 362-3		
	Sub., except SD3 Upper	1	---- ---	2253 244-5	
	Sub., except SD3 Lower, Complete	1	---- ---	2253 210-1	
	Sub., SD3, SC1, SC3 Complete	1	---- ---	1973 174-5	1973 174-5
23-36-120	PILLAR, Rear Quarter				
	Cv. Cp., except SD3	1	---- ---	2251 620-1	
	Cv. Cp., SD3, SC1, SC2 Upper	1	---- ---	1884 524-5	1884 524-5
23-36-121	PANEL, Rear Pillar Roof Rail Joint Cover				
	Sub., SD3, SC1, SC3	1	---- ---	1878 254-5	1878 254-5
23-36-123	HANDLE, Roof Panel Rear Pillar Outside Assist				
	Sub., except SD3 3 Stud Type	1	---- ---	2251 698-9	
	Sub., except SD3 2 Stud Type	1	---- ---	2252 252-3	
	NUT and WASHER	4	---- ---	*6023 204	
	SEALING WASHER Upper Stud	2	---- ---	*2252 297	
	SEALING WASHER Lower Stud	2	---- ---	*6022 007	
	Sub., SD3, SC1, SC3 PKG.	2	---- ---	2196 839	2196 839
	NUT	8	---- ---	---- ---	6006 035
	BOLT	2	---- ---	---- ---	681 135
23-36-125	REINFORCEMENT, Rear Lower Pillar Quarter Inside Panel				
	4 D. Sub.	1	2081 718-9		
	REINFORCEMENT, Rear Pillar Lower Corner				
	Sub.	1	---- ---	*2252 300-1	
	REINFORCEMENT, Rear Pillar to Wheelhouse				
	Sub., SD3, SC1, SC3	1	---- ---	1877 840-1	1877 840-1
23-36-131	COVER, Rear Pillar Wiring				
	Sub., SD3, SC1, SC3, 3 Seater Left	1	---- ---	2189 148	2189 148
23-36-134	DEFLECTOR, Roof Panel Outside Air				
	Sub., use with 2252 252-3 Handle	1	---- ---	*2252 254-5	
	SCREW	2	---- ---	* 167 079	
	SCREW	4	---- ---	*9418 381	

★ Indicates use as required.
⊟ Indicates parts not listed in any previous parts book.
March 8, 1963 Supersedes May 1, 1962.

Printed in U.S.A.
Prices and specifications subject to change without notice.
Right and left part numbers are on same line, first number is right, second number is left.
* Indicates change or addition.

MyMopar.com

CODE	PART NAME AND DESCRIPTION	PER CAR	VALIANT LANCER	PLYMOUTH DODGE	CHRYSLER IMPERIAL
23-38-0	**FLOOR TUNNEL CONSOLE**				
23-38-1	CONSOLE, Floor				
	SP2-P, SD2-P	1	---- ---	*2292 537	
	SC2 Front	1	---- ---	---- ---	2292 518
23-38-3	DOOR, Floor Console				
	SP2-P Complete	1	---- ---	⊟2292 889	
	SD2-P Complete	1	---- ---	*2292 454	
23-38-5	FINISH PLATE, Floor Console				
	SD2-P, SC2 Front	1	---- ---	*2292 484	*2161 021
	Rear	1	---- ---	2292 485	2161 022
	SP2-P Front	1	---- ---	*2292 887	
	Rear	1	---- ---	*2292 888	
23-38-6	STOP, Floor Console Door				
	SP2-P, SD2-P Prime	1	---- ---	*2419 269	
23-38-9	FILLER, Front Floor Console to Instrument Panel				
	SC2-M	1	---- ---	---- ---	2161 041
23-38-12	BASE, Floor Tunnel Rear Console Arm Rest				
	SC2-M Dark Tan	1	---- ---	---- ---	*2419 071
23-38-14	HINGE, Floor Tunnel Console Arm Rest Lid				
	SC2-M Front	1	---- ---	---- ---	2161 038
	Rear	1	---- ---	---- ---	2161 038
	HINGE, Floor Console Door				
	SP2-P, SD2-P Prime	1	---- ---	⊟2292 456	
23-38-15	CATCH, Floor Console				
	SP2-P, SD2-P	1	---- ---	2292 499	
23-38-16	REINFORCEMENT, Front Floor Carpet Heel Pad Finish Plate				
	SC2-M	2	---- ---	---- ---	2086 461
23-38-17	PLATE, Floor Console Door Hinge Reinforcement				
	SP2-P, SD2-P	1	---- ---	2292 481	
	PLATE, Front Floor Carpet Heel Pad Finish				
	SC2-M	2	---- ---	---- ---	2292 544
23-38-21	FERRULE, Floor Tunnel Front Console Arm Rest Lid Check Strap Attaching				
	SC2-M	1	---- ---	---- ---	2161 572
	FERRULE, Floor Tunnel Front Console Arm Rest Check Strap to Base Attaching				
	SC2-M	1	---- ---	---- ---	2161 572
23-38-22	TAPPING PLATE, Rear Floor Tunnel Console Arm Rest Hinge to Support				
	SC2-M	2	---- ---	---- ---	2086 838
	TAPPING PLATE, Floor Tunnel Front Console Arm Rest Base to Lid Hinge Attaching				
	SC2-M	1	---- ---	---- ---	2086 838
	TAPPING PLATE, Floor Tunnel Front Console Arm Rest Hinge to Lid				
	SC2-M	1	---- ---	---- ---	2086 838
	TAPPING PLATE, Floor Tunnel Rear Console Arm Rest Lid				
	SC2-M	1	---- ---	---- ---	2086 838
	TAPPING PLATE, Front Floor Tunnel Console Arm Rest Hinge to Console				
	SC2-M	1	---- ---	---- ---	2086 838
23-38-23	CABLE, Floor Tunnel Front Console Arm Rest Lid Check Strap				
	SC2-M	1	---- ---	---- ---	1777 897

★ Indicates use as required.
⊟ Indicates parts not listed in any previous parts book.
Right and left part numbers are on same line, first number is right, second number is left.
* Indicates change or addition.

Printed in U.S.A.
Prices and specifications subject to change without notice.
May 1, 1962 Supersedes Nov. 30, 1961.

MyMopar.com

CODE	PART NAME AND DESCRIPTION	PER CAR	VALIANT LANCER	PLYMOUTH DODGE	CHRYSLER IMPERIAL
23-39-0	**WINDOW LIFT (MANUAL)**				
23-39-2	SPRING, Door Manual Window Regulator Assist				
	SD3, SC1, SC2, SC3 Front	2	*1256 337	*1256 337	*1256 337
	4 D., 4 D. Sub., Sp. 4 D., except SD3 Front	2	---- ---	*2166 851	
	Sp. Cl. Cp., Cv. Cp., Cl. Sed., except SD3 Front	2	---- ---	*2216 173	
	Rear	2	1256 337	2166 851	
	Sp. 4 D., Sp. 4 D. Sub., SD3, SC1, SC2, SC3 Rear	2	---- ---	*1690 329	*1690 329
	4 D., SD3, SC1, SC2, SC3, Rear	2	---- ---	*1256 337	*1256 337
23-39-5	REGULATOR or PLATE and ARM, Door Manual Window				
	4 D., 4 D. Sub., Sp. 4 D., Sp. 4 D. Sub., SC1, SC2, SC3, except SD3 Front	1	*2081 624-5	*2167 484-5	*1954 346-7
	Sp. 4 D., SY1L Front	1	---- ---	---- ---	2093 486-7
	Sp. Cl. Cp., Cv. Cp., Cl. Sed., SC1, SC2, SC3, except SD3, Front	1	*2195 822-3	*2166 864-5	*1954 348-9
	Sp. Cl. Cp., SY1L Front	1	---- ---	---- ---	2093 456-7
	4 D., 4 D. Sub., SC1, SC2, SC3, except SD3 Rear	1	*2081 438-9	*2167 578-9	*1883 568-9
	4 D., Sp. 4 D., Sub., SD3 Front	1	---- ---	*1954 346-7	
	Sp. Cl. Cp., Cv. Cp., SD3 Front	1	---- ---	*1954 348-9	
	Sp. 4 D., Sp. 4 D. Sub., SC1, SC2, SC3, except SD3 Rear	1	---- ---	*2167 578-9	*1883 494-5
	Sp. 4 D., Sub., SD3, Rear	1	---- ---	*1883 494-5	
	Sp. 4 D., SY1L Rear	1	---- ---	---- ---	2093 446-7
23-39-6	SCREW and WASHER, Window Regulator Attaching	★	2165 340	2165 340	2165 340
	SCREW, Window Regulator Arm and Link SY1 1/4 - 20 x 7/8"	★	---- ---	---- ---	6006 172
23-39-10	SPRING NUT, Manual Window Regulator Link and Mounting Plate	★	6022 287	6022 297	6022 287
23-39-11	BOLT, Manual Window Regulator Pivot Arm				
	SY1	★	6000 211	6000 211	6006 239
	SC1, SC2, SC3	★	---- ---	---- ---	6000 211
23-39-12	WASHER, Manual Window Regulator Arm Stud to Glass Lower Channel Leather	★	6000 141	6000 141	6000 141
	SPRINGWASHER, Manual Window Regulator Stud to Connecting Link				
	SC1, SC2	★	1954 125	1954 125	1954 125
	SY1	★	---- ---	---- ---	6000 165
23-39-15	STOP, Manual Window Regulator Down Position on Regulator				
	SC1, SC2, SC3 Front and Quarter	★	1909 918	1909 918	1909 918
	4 D., 4 D. Sub., SC1, SC2, SC3 Rear	2	1909 918	1909 918	1909 918
	Sp. 4 D. Rear	2	---- ---	1909 918	1909 918
	STOP, Door Manual Window Regulator Pivot Arm				
	Sp. 4 D., SY1L Rear	2	---- ---	---- ---	1751 732

★ Indicates use as required.
⊟ Indicates parts not listed in any previous parts book.
May 1, 1962 Supersedes Nov. 30, 1961.

Printed in U.S.A.
Prices and specifications subject to change without notice.
Right and left part numbers are on same line, first number is right, second number is left.
* Indicates change or addition.

MyMopar.com

CODE	PART NAME AND DESCRIPTION	PER CAR	VALIANT LANCER	PLYMOUTH DODGE	CHRYSLER IMPERIAL
23-39-0	**WINDOW LIFT (MANUAL) - Cont'd**				
23-39-17	BUSHING, Window Regulator Stud				
	4 D., Sp. 4 D. Sub., SC1, SC2, SC3 Rear	4	*2166 511	*2166 511	*2166 511
	Sp. Cl. Cp., Cv. Cp., SD3, SC1, SC2 Quarter	4	*2166 511	*2166 511	*2166 511
	Cl. Sed. To Glass	2	2243 391		
23-39-18	ARM and LINK, Door Manual Window Regulator				
	SC1, SC2, SC3 Front	1	2081 644-5	2216 152-3	1954 342-3
	SD3, Front	1	---- ---	*1954 342-3	
	Sp. 4 D., SY1L Front	1	---- ---	---- ---	1692 154-5
	Sp. Cl. Cp., SY1L Front	1	---- ---	---- ---	1750 466-7
	Sp. 4 D., SY1-L Rear	1	---- ---	---- ---	⊟2188 802-3
23-39-19	BRACKET, Door Manual Window Regulator Pivot Arm				
	SC1, SC2, SC3, except SD3, Front	2	*1592 610	⊟2167 318	*1245 581
	Rear	2	1592 610	2254 039	
	SD3 Front	2	---- ---	*1245 581	
23-39-30	BRACKET, Rear Door Window Regulator Adjusting				
	SY1 includes Pivot BRACKET . . .	1	---- ---	---- ---	2259 394-5
23-39-33	STUD, Window Regulator Pivot Arm and Link Roller				
	SY1	★	---- ---	---- ---	1691 100
23-39-34	REGULATOR, Quarter Window				
	Sp. Cl. Cp., SC1, SC2, except SD3	1	*2195 346-7	*2167 188-9	*1884 492-3
	Sp. Cl. Cp., SD3, SY1	1	---- ---	*1884 492-3	*1651 416-7
	Cv. Cp., SP2, SD2, SC1, SC2	1	---- ---	*2167 188-9	*1884 494-5
	Cv. Cp., SD3	1	---- ---	*1884 494-5	
	Cl. Sed., except SD3	1	*2243 396-7	*2167 186-7	
23-39-44	SPRING, Quarter Window Regulator Assist				
	Sp. Cl. Cp., SD3, SC1, SC2	2	*2259 130	*1690 329	*1690 329
	Cv. Cp., SD3, SC1, SC2	2	---- ---	*1256 337	*1256 337
	Cl. Sed.	2	2243 517		
	Sp. Cl. Cp., Cv. Cp., Cl. Sed., except SD3	2	---- ---	*2216 172	
23-39-45	ROLLER, Window Regulator Pivot Arm and Link				
	SY1	★	---- ---	---- ---	1690 937
23-39-47	ARM and LINK, Quarter Window Regulator				
	Sp. Cl. Cp., SY1	1	---- ---	---- ---	1691 966-7
23-39-48	BRACKET, Quarter Window Regulator Pivot Arm				
	Sp. Cl. Cp.	1	2195 768-9		
	Sp. Cl. Cp., Cv. Cp., Cl. Sed., except SD3	2	---- ---	⊟2167 318	
23-39-53	CLIP, Quarter Window Regulator Link to Glass Pin				
	Cl. Sed.	2	2243 390		
23-40-0	**ROOF RAIL AND LUGGAGE RACK**				
23-40-82	SUPPORT, Rear Window Frame to Rear Head-lining Bow				
	4 D., Sp. Cl. Cp., Cl. Sed.	2	2082 571		
	4 D., Sp. 4 D., SD3, SC1, SC2, SC3 w/Low Window	2	---- ---	*1952 803	*1952 803
	SUPPORT, Rear Listing Wire to Roof Rear Rail Reinforcement				
	4 D. Sub.	2	2082 226		

★ Indicates use as required.
⊟ Indicates parts not listed in any previous parts book.
Right and left part numbers are on same line, first number is right, second number is left.
* Indicates change or addition.

Printed in U.S.A.
Prices and specifications subject to change without notice.
May 1, 1962 Supersedes Nov. 30, 1961.

MyMopar.com

CODE	PART NAME AND DESCRIPTION	PER CAR	VALIANT LANCER	PLYMOUTH DODGE	CHRYSLER IMPERIAL
23-40-0	**ROOF RAIL AND LUGGAGE RACK - Cont'd**				
23-40-85	RAIL, Roof Side				
	4 D., SD3	1	---- ---	1959 570-1	1959 570-1
	Sp. 4 D. Sub., SD3	1	---- ---	1961 468-9	1961 468-9
	4 D., Sp. 4 D. Sub., Sp. Cl. Cp., Cl. Sed., except SD3 Inner	1	---- ---	2166 298-9	
	4 D. Sub. Rear Inner	1	---- ---	2166 304-5	
	Rear Outer	1	---- ---	2166 302-3	
	4 D. Sub., Sp. 4 D., Sp. Cl. Cp., except SD3 Outer	1	---- ---	2166 310-1	
	Sp. Cl. Cp., SD3, SC1, SC2	1	2195 886-7	1961 618-9	1961 618-9
	Sp. 4 D., SY1 Front Inner	1	---- ---	---- ---	1961 064-5
	Front Outer	1	---- ---	---- ---	1960 540-1
	Rear Outer	1	---- ---	---- ---	1877 328-9
	Sp. Cl. Cp., SY1 Front Inner	1	---- ---	---- ---	1877 768-9
	Front Outer	1	---- ---	---- ---	1960 542-3
	Rear Outer	1	---- ---	---- ---	1961 584-5
	RAIL, Roof Rear				
	Sub., SD3	1	2081 232	1960 636	1960 636
	Sub., except SD3 Inner	1	---- ---	2166 308	
	Outer	1	---- ---	2166 306	
	Corner	1	2082 652-3	2251 584-5	
	Side Upper	1	2081 238-9		
23-40-86	REINFORCEMENT, Roof Side Rail				
	4 D., SD3	1	2243 538-9	1869 556-7	1869 556-7
	Sp. 4 D., SD3, SC1, SC2, SC3	1	---- ---	1869 556-7	1869 556-7
	Sub., SD3	1	2243 538-9	1869 556-7	1869 556-7
	Sub., SD3 Rear	1	---- ---	1861 128-9	1861 128-9
	Sp. Cl. Cp., SD3, SC1, SC2	1	2243 536-7	1878 338-9	1878 338-9
	Sp. Cl. Cp., SD3, SC1, SC2, Rear	1	---- ---	1878 340-1	1878 340-1
	Cl. Sed.	1	2243 536-7		
	REINFORCEMENT, Roof Rail				
	Sub. Rear	1	2081 233		
	Sub. Rear Corner	1	2082 654-5		
	REINFORCEMENT, Roof Side Outer Rail to Roof Side Outer Rail Extension				
	Sub., except SD3	1	---- ---	2252 298-9	
	EXTENSION, Roof Side Rail Reinforcement				
	Except Sub.	1	*2081 220-1		
	4 D., Sp. 4 D., SD3, SC1, SC2, SC3 w/Low Window	1	---- ---	1882 134-5	1882 134-5
	Sp. 4 D., SC1, SC2, SC3 w/High Window	1	---- ---	---- ---	1952 648-9
	Sub., SD3, SC1, SC3	1	---- ---	1960 064-5	1960 064-5
23-40-92	EXTENSION, Roof Side Rail				
	Front	1	2195 956-7		
	Sp. Cl. Cp. Rear	1	2081 224-5		
	4 D., Sp. 4 D., SD3, SC1, SC2, SC3 w/Low Window	1	---- ---	1884 868-9	1884 868-9
	Sp. 4 D., SC1, SC2, SC3 w/High Window	1	---- ---	---- ---	1952 650-1
	Sub., except SD3 Inner	1	---- ---	2251 582-3	
	Sub., except SD3 Outer	1	---- ---	2251 572-3	
	Sub., SD3, SC1, SC3	1	---- ---	1961 422-3	1961 422-3
	Sp. 4 D., SY1 Rear Outer	1	---- ---	---- ---	1877 408-9
	Sp. Cl. Cp., SY1 Rear Inner, to Wheel House	1	---- ---	---- ---	1810 058-9
	EXTENSION, Roof Rail to Quarter Window Front Frame				
	Sub., SD3, SC1, SC3	1	---- ---	1961 018-9	1961 018-9
23-40-96	SUPPORT, Roof Side Rail to Wheelhouse Outer Panel				
	Sub., except SD3	1	081 732-3	2166 312-3	

★ Indicates use as required.
⊟ Indicates parts not listed in any previous parts book.
March 8, 1963 Supersedes May 1, 1962.

Printed in U.S.A.
Prices and specifications subject to change without notice.
Right and left part numbers are on same line, first number is right, second number is left.
* Indicates change or addition.

MyMopar.com

CODE	PART NAME AND DESCRIPTION	PER CAR	VALIANT LANCER	PLYMOUTH DODGE	CHRYSLER IMPERIAL
23-40-0	**ROOF RAIL AND LUGGAGE RACK - Cont'd**				
23-40-100	GUSSET, Roof Rail to Rear Window Upper Frame to Wheelhouse Support Inner				
	4 D., Sp. 4 D., Sp. Cl. Cp., Cl. Sed., except SD3	1	---- ---	2166 952-3	
	GUSSET, Roof Rail to Inner Gusset to Rear Window Upper Frame Outer				
	Sp. 4 D., Sp. Cl. Cp., except SD3	1	---- ---	2166 950-1	
23-40-148	NUT, Roof Luggage Rack Slats or Crossmembers				
	Sub.	★	2094 869	2094 869	2094 869
23-40-150	RAIL, Roof Luggage Rack				
	Sub., except SD3 Front	2	2259 276	2243 472	2093 388
	Side	2	2259 275	2243 470	2093 387
	Rear	2	---- ---	2093 388	
	Rear	2	2259 277	2243 472	2093 388
	Sub., SD3 Front	2	---- ---	2093 388	
	Side	2	---- ---	2093 387	
23-40-155	CROSSMEMBER, Roof Luggage Rack				
	Sub., except SD3 Front	★	2259 269	2243 476	
	Center	★	2259 281	2243 477	
	Rear	★	2259 280	2243 476	
23-40-170	SUPPORT or STANCHION, Roof Luggage Rack Rail				
	Sub., except SD3	2	2259 278-9	2259 278-9	
	SD3	3	---- ---	2093 390-1	2093 390-1
23-40-177	CAP, Roof Luggage Rack Slats Frame Front				
	Sub., SD3	2	---- ---	2093 382-3	2093 382-3
23-40-185	FRAME, Roof Luggage Rack Slats				
	Sub., SD3	1	---- ---	2093 380-1	2093 380-1
23-40-187	GASKET, Roof Luggage Rack Slats Frame				
	Sub., SD3	2	---- ---	2093 394	2093 394
	PAD, Roof Luggage Rack Slats Frame	9	---- ---	2094 874	2094 874
	PAD, Roof Luggage Rack Crossmember				
	Sub., except SD3 Front and Rear	2	2259 284	2094 874	
	Center	★	2259 285	2094 874	
	To Stanchions	4	2259 283	2243 473	
23-40-190	SLATS, Roof Luggage Rack				
	Sub., SD3	★	---- ---	2093 386	2093 386
		5	2259 282		
23-41-0	**WINDOW LIFT (ELECTRIC)**				
23-41-4	REGULATOR, Electric Window				
	4 D., 4 D. Sub., Sp. 4 D., SY1, except SD3 Front	1	---- ---	2299 678-9	2094 322-3
	Sp. Cl. Cp., Cv. Cp., SY1, except SD3 Front	1	---- ---	2299 680-1	1860 962-3
	4 D., 4 D. Sub., Sp. 4 D., SY1, except SD3 Quarter	1	---- ---	2299 682-3	1753 706-7
	Sp. Cl. Cp., Cv. Cp., except SD3 Quarter	1	---- ---	*2299 682-3	
	4 D., 4 D. Sub., Sp. 4 D., SY1, except SD3 Rear	1	---- ---	2299 684-5	1860 962-3
	4 D., Sp. 4 D., Sp. 4 D Sub., SD3, SC1, SC2, SC3 Front	1	---- ---	1964 364-5	1964 364-5
	Sp. Cl. Cp., Cv. Cp., SD3, SC1, SC2 Front	1	---- ---	1964 360-1	1964 360-1
	4 D., SD3, SC1, SC2, SC3 Rear	1	---- ---	1964 362-3	1964 362-3
	Sp. 4 D., Sp. 4 D. Sub., SD3, SC1, SC2, SC3 Rear	1	---- ---	1964 352-3	1964 352-3

★ Indicates use as required.
⊟ Indicates parts not listed in any previous parts book.
Right and left part numbers are on same line, First number is right, second number is left.
* Indicates change or addition.

Printed in U.S.A.
Prices and specifications subject to change without notice.
March 8, 1963 Supersedes May 1, 1962.

MyMopar.com

CODE	PART NAME AND DESCRIPTION	PER CAR	VALIANT LANCER	PLYMOUTH DODGE	CHRYSLER IMPERIAL
23-41-0	**WINDOW LIFT (ELECTRIC) - Cont'd**				
23-41-4	REGULATOR - Cont'd				
	Sp. Cl. Cp., SD3, SC1, SC2 Quarter	1	---- ---	*1964 356-7	*1964 356-7
	Cv. Cp., SD3, SC1, SC2 Quarter	1	---- ---	*1964 354-5	*1964 354-5
	REGULATOR, Electric Window (used in Dura Type Assembly)				
	4 D., Sp. 4 D., Sp. 4 D. Sub., SD3, SC1, SC2, SC3 Front	1	---- ---	*1964 596-7	*1964 596-7
	4 D., SD3, SC1, SC2, SC3 Rear	1	---- ---	*1964 594-5	*1964 594-5
	Sp. Cl. Cp., Cv. Cp., SD3, SC1, SC2 Front	1	---- ---	*1964 598-9	*1964 598-9
23-41-5	BUS BAR, Electric Window Lift Circuit Breaker	1	---- ---	1498 776	1498 776
23-41-7	SPRING, Electric Window Regulator Assist				
	4 D., Sp. 4 D., 4 D. Sub., SC1, SC2, SC3, except SD3 Front	2	---- ---	*2251 930	*1964 289
	4 D., Sp. 4 D., Sp. 4 D. Sub., Sp. Cl. Cp., SD3 Front	2	---- ---	*1964 289	
	Sp. Cl. Cp., Cv. Cp., SC1, SC2, SC3, except SD3 Front	2	---- ---	*2251 939	*1964 289
	SD3, SC1, SC2, SC3 Rear	2	---- ---	*1964 289	*1964 289
	Sp. Cl. Cp., SD3, SC1, SC2, SC3 Quarter	2	---- ---	*1964 312	*1964 312
	Cv. Cp., SD3 Quarter	2	---- ---	*1964 289	*1964 289
	SY1, SY2, SY3 Doors and Quarters	★	---- ---	---- ---	1440 596
	SPRING, Electric Window Regulator Counter Balance (used in Dura Type Assembly)				
	SD3, SC1, SC2, SC3 Doors and Quarters	★	---- ---	*2165 768	*2165 768
23-41-9	BOLT and WASHER, Electric Window Regulator SD3, SC1, SC2, SC3	★	---- ---	*1963 851	*1963 851
	SCREW and LOCKWASHER, Electric Window Regulator				
	SD3, SC1, SC2, SC3 Front	★	---- ---	*1963 949	*1963 949
	STUD, Electric Window Regulator Pivot Arm SD3, SC1, SC2, SC3	★	---- ---	*6000 211	*6000 211
23-41-11	CIRCUIT BREAKER, Electric Window Lift 30 Amps	1	---- ---	1689 022	1689 022
23-41-12	BRACKET, Electric Window Lift Circuit Breaker Mounting	1	---- ---	1479 060	1479 060
23-41-14	BUMPER, Electric Window Regulator Mounting Bracket, except SD3 Front	2	---- ---	*2251 981	
23-41-25	RETAINER, Electric Window Lift Wiring Conduit				
	except SD3 Front	2	---- ---	*2290 048	*1886 949
	SD3 Front	2	---- ---	*1886 949	
23-41-33	MECHANISM, Electric Window Lift SC1, SC2, SC3, except SD3				
	Front Right	1	---- ---	*2252 048	*1963 827
	Left	1	---- ---	2252 049	1963 827
	Rear and Quarter, Right	1	---- ---	2252 050	1963 828
	Left	1	---- ---	2252 051	1963 828

★ Indicates use as required.
⊟ Indicates parts not listed in any previous parts book.
May 1, 1962 Supersedes Nov. 30, 1961.

Printed in U.S.A.
Prices and specifications subject to change without notice.
Right and left part numbers are on same line, first number is right, second number is left.
* Indicates change or addition.

MyMopar.com

CODE	PART NAME AND DESCRIPTION	PER CAR	VALIANT LANCER	PLYMOUTH DODGE	CHRYSLER IMPERIAL
23-41-0	**WINDOW LIFT (ELECTRIC) - Cont'd**				
23-41-33	MECHANISM - Cont'd				
	SD3 Front	2	---- ---	1963 827	
	SD3 Rear and Quarter	2	---- ---	1963 828	
	SY1 Front	1	---- ---	---- ---	2299 802-3(1)
	Sp. 4 D., SY1 Rear	1	---- ---	---- ---	2299 802-3(1)
	SY1 Front	1	---- ---	---- ---	2428 000-1(2)
	Sp. 4 D., SY1 Rear	1	---- ---	---- ---	2428 000-1(2)
	Quarter Right	1	---- ---	---- ---	1604 889
	Left	1	---- ---	---- ---	1604 890
23-41-34	REPAIR PACKAGE, Electric Window Lift Regulator Mechanism, SD3, SC1, SC2, SC3				
	Used for Mechanism 1963 827	1	---- ---	*2275 142	*2275 142
	Used for Mechanism 1963 828	1	---- ---	*2275 143	*2275 143
23-41-53	BRACKET, Electric Window Regulator Motor Mounting				
	Except SD3 Front, to Inside Panel	2	---- ---	B2428 225	
	4 D., Sp. 4 D., Sub., SD3, SC1, SC2, SC3 Front	1	---- ---	1963 874-5	1963 874-5
	4 D., Sp. 4 D., Sub., SC1, SC2, SC3, except SD3 Rear	1	---- ---	2251 954-5	1964 818-9
	Sp. 4 D., Sub., SD3 Rear	1	---- ---	1964 818-9	
	4 D., Sp. 4 D., Sub., except SD3 Front, on Motor	2	---- ---	*2251 936	
	Sp. Cl. Cp., Cv. Cp., except SD3 Front, on Motor	2	---- ---	*2251 982	
23-41-55	WIRING, Electric Window Lift				
	4 D., except SD3	1	---- ---	2258 589	2258 682
	SD3	1	---- ---	2258 682	
	Sp. 4 D., SC1, SC2, SC3, except SD3	1	---- ---	2258 592	2258 683
	Sp. 4 D., SD3, SY1	1	---- ---	2258 683	2258 685
	Sp. Cl. Cp., Cv. Cp., SC1, SC2, SC3, except SD3	1	---- ---	2258 584	2258 681
	SD3	1	---- ---	2258 681	
	Sp. Cl. Cp., Cv. Cp., SY1	1	---- ---	---- ---	2258 684
	Sub., except SD3	1	---- ---	2258 589	2258 683
	SD3	1	---- ---	2258 683	
	WIRING, Electric Window Lift and Door Lock				
	Sp. 4 D., SY1	1	---- ---	---- ---	2258 687
	Sp. Cl. Cp., SY1	1	---- ---	---- ---	2258 686
	WIRING, Electric Window Lift and Power Vent				
	Sp. 4 D., SY1	1	---- ---	---- ---	2258 689
	Sp. Cl. Cp., Cv. Cp., SY1	1	---- ---	---- ---	2258 688
	WIRING, Electric Window Lift, Power Vent and Door Lock				
	Sp. 4 D., SY1	1	---- ---	---- ---	2258 691
	Sp. Cl. Cp., Cv. Cp., SY1	1	---- ---	---- ---	2258 690
23-41-56	TERMINAL BLOCK, Quarter Electric Window Lift				
	Sp. Cl. Cp., Cv. Cp., SY1	2	---- ---	---- ---	913 297
23-41-57	SCREW, Quarter Electric Window Lift Terminal Block Mounting				
	Sp. Cl. Cp., CV. Cp., SY1	4	---- ---	---- ---	6006 119
23-41-95	GROMMET, Electric Window Lift Wiring Conduit				
	SC1, SC2, SC3 Front	2	---- ---	2257 299	2257 299
	SC1, SC2, SC3, except SD3 Rear	2	---- ---	2258 361	2257 744
	SD3, SY1 Rear	2	---- ---	2257 744	1753 681
23-41-106	MOTOR, Electric Window Lift				
	SC1, SC2, SC3, except SD3 Front	2	---- ---	2252 001	*2084 445
	4 D., SC1, SC2, SC3, except SD3 Rear	2	---- ---	2252 001	2084 445

NOTE 1: With Worm Shaft GEAR length 2.50".

NOTE 2: With Worm Shaft GEAR length 2.375".

★ Indicates use as required.
B Indicates parts not listed in any previous parts book.
Right and left part numbers are on same line, first number is right, second number is left.
* Indicates change or addition.

Printed in U.S.A.
Prices and specifications subject to change without notice.
March 8, 1963 Supersedes May 1, 1962.

MyMopar.com

CODE	PART NAME AND DESCRIPTION	PER CAR	VALIANT LANCER	PLYMOUTH DODGE	CHRYSLER IMPERIAL
23-41-0	**WINDOW LIFT (ELECTRIC) - Cont'd**				
23-41-106	MOTOR - Cont'd				
	Sp. 4 D., Sub., except SD3 Rear	2	---- ---	2252 001	2084 444
	Sp. Cl. Cp., SC1, SC2, except SD3 Quarter	2	---- ---	2252 001	2084 444
	Cv. Cp., SC1, SC2, except SD3 Quarter	2	---- ---	2252 001	2084 446
	SD3 Front	2	---- ---	2084 445	
	4 D., Sp. 4 D., Sub., SD3 Rear	2	---- ---	2084 445	
	Sp. Cl. Cp., SD3 Quarter	2	---- ---	2084 445	
	Cv. Cp., SD3 Quarter	2	---- ---	2084 446	
	SY1 Front	2	---- ---	---- ---	2299 804
	SY1 Rear	2	---- ---	---- ---	2299 805
	SY1 Quarter	2	---- ---	---- ---	2084 849
	MOTOR, Electric Window Lift (used in Dura Type Assembly) SD3, SC1, SC2, SC3	2	---- ---	*2196 343	*2196 343
23-41-126	BUMPER, Electric Window Regulator Motor Mounting SY1	★	---- ---	---- ---	1860 619
23-41-128	GROMMET, Electric Window Regulator Motor Mounting Sp. Cl. Cp., Cv. Cp., SY1 Quarter	★	---- ---	---- ---	1383 351
23-41-129	SCREW, Electric Window Regulator Motor Strap SY1	★	---- ---	---- ---	6006 249
23-41-138	COUPLING, Electric Window Lift Motor to Mechanism Flexible				
	Except SD3 Front	2	---- ---	1778 955	*1440 489
	Except SD3 Rear	2	---- ---	1778 955	1688 919
	Except SD3 Quarter	2	---- ---	*1778 955	*1440 489
	SD3 Front	2	---- ---	*1440 489	
	SD3 Rear	2	---- ---	1688 919	
	SD3 Quarter	2	---- ---	*1440 489	
	COUPLING and DRIVE CABLE, Electric Window Lift Motor to Mechanism (used in Dura Type Assembly) SD3, SC1, SC2, SC3	4	---- ---	1810 641	1810 641
23-41-139	SHIELD, Electric Window Lift Motor Drive Shaft SD3 Plastic	★	---- ---	1689 167	1689 167
23-41-167	CONDUIT, Electric Window Lift Wiring				
	SC1, SC2, SC3, except SD3 Front	2	---- ---	2290 047	1971 326
	SC1, SC2, SC3, except SD3 Rear	2	---- ---	2258 983	1971 314
	SD3, SY1 Front	2	---- ---	1971 326	2258 085
	SD3, SY1 Rear	2	---- ---	1971 314	1972 092
23-41-168	SUPPORT, Electric Window Lift Wiring Conduit SY1 Front	2	---- ---	---- ---	2258 010
23-41-170	SWITCH, Electric Window Lift				
	SC1, SC2, SC3 Single includes BEZEL	3	2096 399	2096 399	2096 399
	SY1 Single, includes BEZEL	3	---- ---	---- ---	2096 765
	SC1, SC2, SC3 4 Gang, includes BEZEL	1	2096 089	2096 089	2096 089
	SY1 4 Gang, includes BEZEL	1	---- ---	---- ---	2096 090
	SWITCH, Electric Window Lift and Vent Wing				
	SY1 2 Gang, includes BEZEL	1	---- ---	---- ---	2096 177
	SY1 6 Gang, includes BEZEL	1	---- ---	---- ---	2096 176
	SWITCH, Electric Window Lift Safety Toggle Type	1	---- ---	*2197 405	*2197 405

★ Indicates use as required.
⊟ Indicates parts not listed in any previous parts book.

Printed in U.S.A.
Prices and specifications subject to change without notice.

Right and left part numbers are on same line, first number is right, second number is left.
* Indicates change or addition.

MyMopar.com

CODE	PART NAME AND DESCRIPTION	PER CAR	VALIANT LANCER	PLYMOUTH DODGE	CHRYSLER IMPERIAL
23-41-0	**WINDOW LIFT (ELECTRIC) - Cont'd**				
23-41-171	HINGE, Rear Door Electric Window Lift Wiring Conduit to Door, except SD3	2	---- ---	2258 972	
23-41-174	SPRING, Electric Window Lift Switch and Bezel Retaining	★	2096 169	2096 169	2096 169
23-41-176	CONNECTOR, Electric Window Lift Switch				
	Single, Right Front, Right Rear, Left Rear	3	---- ---	*2096 905	*2096 905
	Single, Left Front, for Power Vent	2	---- ---	---- ---	*2096 905
	Single, Right Front, for Power Vent	1	---- ---	---- ---	*2096 905
	4 Way, Left Front, Down	1	---- ---	*2096 908	*2096 908
	5 Way, Left Front Up	1	---- ---	*2096 911	*2096 911
23-41-184	RETAINER, Electric Window Lift Switch and Bezel				
	Left Front Door	1	---- ---	1769 330	1769 330
	Except, Left Front Door	3	---- ---	1971 478	1971 478
23-41-250	ROLLER, Electric Window Regulator Guide Arm Plate				
	SY1 Rear	6	---- ---	---- ---	2094 112
23-41-270	HOUSING, PINION and CABLE PACKAGE, Electric Window Regulator (used in Dura Type Assembly)				
	SD3, SC1, SC2, SC3	1	---- ---	2166 926-7	2166 926-7
23-41-273	BUSHING, Electric Window Lift Mechanism Gear Shaft (used in Dura Type Assembly)				
	SD3, SC1, SC2, SC3 Outer	★	---- ---	1810 635	1810 635
	SD3, SC1, SC2, SC3 Inner	★	---- ---	1810 648	1810 635
23-41-281	BRACE, Front Door Inside Panel Electric Window Regulator Lower				
	Sp. Cl. Cp., Cv. Cp., SD3, SC1, SC2	2	---- ---	1964 821	1964 821
	4 D., Sp. 4 D., Sp. 4 D. Sub., SD3, SC1, SC2, SC3	2	---- ---	1964 823	1964 823
	REINFORCEMENT, Rear Door Inside Panel Electric Window Regulator				
	4 D., SD3, SC1, SC2, SC3				
	Upper	1	---- ---	1964 690-1	1964 690-1
	Front	1	---- ---	1964 696-7	1964 696-7
23-41-286	SEAL, Electric Window Regulator Gear Mechanism, Except SD3	1	---- ---	2252 029	
23-42-0	**WINDOW GLASS RUN**				
23-42-13	RUN, Door Vent Wing Divisional Channel Glass				
	SY1	1	---- ---	---- ---	2093 836-7
23-42-16	RUN, Front Door Window Glass				
	4 D. Sub., except SD3	2	2259 387	2167 622	2216 406
	Cl. Sed.	2	2259 389	2167 620	
	4 D., SD3	2	---- ---	2216 406	
23-42-17	SPACER, Quarter Window Glass Run Front Retainer				
	Cl. Sed.	2	---- ---	2252 368	
23-42-23	RUN, Rear Door Window Glass				
	4 D., except SD3	2	2259 388	2166 834	2216 404
	4 D., SD3	2	---- ---	2216 404	
	Sub., except SD3	2	2259 388	2166 834	
23-42-26	RETAINER, Front Door Window Glass Run				
	4 D., SD3 Right	1	---- ---	1952 378	1952 378
	Left	1	---- ---	1952 379	1952 379
	RETAINER, Rear Door Window Glass Run				
	4 D., SD3	1	---- ---	1954 144-5	1954 144-5

★ Indicates use as required.
⊟ Indicates parts not listed in any previous parts book.
Right and left part numbers are on same line, first number is right, second number is left.
* Indicates change or addition.

Printed in U.S.A.
Prices and specifications subject to change without notice.
March 8, 1963 Supersedes May 1, 1962.

MyMopar.com

CODE	PART NAME AND DESCRIPTION	PER CAR	VALIANT LANCER	PLYMOUTH DODGE	CHRYSLER IMPERIAL
23-42-0	**WINDOW GLASS RUN - Cont'd**				
23-42-38	RUN, Quarter Window Glass				
	Cl. Sed.	2	2259 396	2167 196	
	Sp. Cl. Cp., SY1	1	---- ---	---- ---	2094 154-5
23-42-46	RUN, Tailgate Window Glass				
	Sub., except SD3 Upper	1	2082 397	2251 475	2189 351
	SD3 Upper	1	---- ---	2189 351	
	Sub. Lower	2	2082 391	2189 353	2189 353
23-42-51	INSERT, Tailgate Window Glass Run Upper				
	Sub., SD3, SC1, SC3	2	2255 333	2255 333	2255 333
23-42-56	RETAINER, Quarter Window Glass Run				
	Cl. Sed. Front	1	---- ---	2216 390-1	
	Rear	1	---- ---	2216 394-5	
23-42-57	FILLER, Quarter Window Glass Run to Roof Rear Side Rail				
	Sp. Cl. Cp., SY1	1	---- ---	---- ---	2094 156-7
23-42-58	SCREW and WASHER, Window Glass Run Retainer	★	2165 340	2165 340	2165 340
23-42-59	BRACKET, Quarter Window Glass Run Retainer				
	Cl. Sed. Front	2	---- ---	2252 188	
	SUPPORT, Quarter Window Glass Run Retainer				
	Cl. Sed. Front	2	---- ---	2216 358	
	Rear	2	---- ---	2216 415	
23-45-0	**FRONT SEAT**				
23-45-18	FRAME, Electric Seat Adjuster Lower				
	Sp. 4 D., Sp. Cl. Cp., Cv. Cp., SC2	1	---- ---	---- ---	*2270 263
23-45-20	SUPPORT, Seat Cushion Release Wire				
	Sp. 4 D., Sp. Cl. Cp., Cv. Cp., SC2 w/Manual Seat Adjuster	1	---- ---	---- ---	*1969 032
23-45-29	PLATE, Front Seat Back Hinge Stop				
	Sp. Cl. Cp., Cl. Sed.	2	2160 502		
23-45-30	BUMPER, Front Seat Back Stop				
	Sp. Cl. Cp., Cv. Cp., Cl. Sed.	2	2160 500	1815 328	1815 328
	Cl. Sed. w/Heavy Duty Springs	2	---- ---	2270 579	
23-45-33	BRACKET, Front Seat Back Outer Hinge Arm Cover				
	SC1	1	---- ---	2080 944-5	2080 944-5
23-45-41	SNAP RING, Front Seat Side Panel Hinge Rod				
	Sp. Cl. Cp., Cv. Cp., Cl. Sed.	2	---- ---	1884 405	1884 405
23-45-56	SCREW, Front Seat Back to Cushion Spring Adjusting				
	Sp. Cl. Cp., Cv. Cp., SC2	2	---- ---	---- ---	6016 005
23-47-0	**FRONT SEAT ADJUSTER**				
23-47-6	TRACK and SUPPORT, Manual Seat Adjuster				
	Upper Right	1	---- ---	2189 900	2189 900
	Except SD3 Left	1	---- ---	2162 307	2189 901
	SD3 Left	1	---- ---	2189 901	
	All Lower	1	---- ---	2251 966-7	2251 966-7
	ADJUSTER, Manual Seat				
	Right	1	2259 250		
	Left	1	2082 686		

★ Indicates use as required.
⊟ Indicates parts not listed in any previous parts book.
March 8, 1963 Supersedes May 1, 1962.

Printed in U.S.A.
Prices and specifications subject to change without notice.
Right and left part numbers are on same line, first number is right, second number is left.
* Indicates change or addition.

MyMopar.com

CODE	PART NAME AND DESCRIPTION	PER CAR	VALIANT LANCER	PLYMOUTH DODGE	CHRYSLER IMPERIAL
23-47-0	**FRONT SEAT ADJUSTER - Cont'd**				
23-47-6	ADJUSTER, Front Seat Manual, w/Bucket Seats				
	Driver's Side, 2 Way, Outer . .	1	*2299 650		
	Inner	1	*2299 643(1)		
	Inner	1	*2299 989(2)		
	Passenger's Side, Stationary, Outer	1	*2299 649		
	Inner	1	*2299 651		
	Driver's Side, 6 Way, Outer . .	1	⊟2428 095		
	Inner	1	⊟2428 097		
	Passenger's Side, 6 Way, Outer	1	⊟2428 094		
	Inner	1	*2428 096		
	SC2 Driver's Side, Outer	1	---- ---	*2299 641	*2299 641(1)
	Outer	1	---- ---	---- ---	*2428 133(1)
	Inner	1	---- ---	*2299 643	*2299 655
	Passenger's Side, Outer	1	---- ---	*2299 640	*2299 662
	Inner	1	---- ---	*2299 642	*2299 656
	GUIDE or TRACK, Electric Seat Adjuster				
	Right	1	---- ---	2080 828	2080 828
	Left	1	---- ---	2080 827	2080 827
23-47-8	COVER, Electric Seat Adjuster Track				
	Except Sp. Cl. Cp., Cv. Cp., SC2	1	---- ---	1839 386-7	1839 386-7
	Sp. Cl. Cp., Cv. Cp., SC2				
	Right	1	---- ---	---- ---	2171 253
	Left	1	---- ---	---- ---	1916 852
	NOTE: With 1916 852 Cover, also specify 1 of 1902 186 Name Plate.				
23-47-9	STUD, Electric Seat Adjuster to Floor	8	---- ---	6008 111	6008 111
	BOLT and WASHER, Manual Seat Adjuster	4	---- ---	6008 220	6008 220
23-47-12	STOP, Electric Seat Adjuster Track Horizontal	1	---- ---	1830 236-7	1830 236-7
23-47-15	SPACER, Front Seat Adjuster Support to Floor Pan				
	SC2 w/Bucket Seats	4	2299 663	2299 663	2299 663
23-47-16	NUT, Manual Seat Guide Support				
	Front	2	---- ---	2080 951	2080 951
23-47-26	SPRING, Manual Seat Guide Tension				
	w/o Bucket Seats	2	1902 350	1902 350	1902 350
	Sp. Cl. Cp., Cv. Cp., SC2				
	w/Bucket Seats	2	2299 980	2299 980	2299 980
23-47-35	NUT and WASHER, Seat Adjuster to Floor Pan				
	SC1, SC2, SC3	★	6008 000	6008 243	6008 243
	SY1	★	---- ---	---- ---	6022 056
23-47-55	KNOB, Manual Seat Guide Latch Control	1	1902 217	2161 291	2161 291
23-47-64	CLIP, Manual Seat Guide Latch Connecting Wire, SD3	1	---- ---	1969 366	1969 366
23-47-66	WIRE, Manual Seat Guide Latch Connecting,				
	Except SD3	1	2082 545	2270 067	1969 367
	SD3	1	---- ---	1969 367	
	SC2 w/Bucket Seats	2	2299 661	2299 661	2299 661
23-47-75	SPRING, Manual Seat Guide Latch	2	1645 615	1645 615	1645 615
23-47-196	PIN, Electric Seat Adjuster Track Rear Lever	2	---- ---	6008 216	6008 216
23-47-344	UNIT or MECHANISM, Electric Seat Adjuster Drive	1	---- ---	1819 228	1819 228
	Slave Right	1	---- ---	1819 240	1819 240
	Left	1	---- ---	1819 239	1819 239

NOTE 1: Length of Stud 1.75"

NOTE 2: Length of Stud 1.38"

★ Indicates use as required.
⊟ Indicates parts not listed in any previous parts book.
Right and left part numbers are on same line, first number is right, second number is left.
* Indicates change or addition.

Printed in U.S.A.
Prices and specifications subject to change without notice.
March 8, 1963 Supersedes May 1, 1962.

MyMopar.com

CODE	PART NAME AND DESCRIPTION	PER CAR	VALIANT LANCER	PLYMOUTH DODGE	CHRYSLER IMPERIAL
23-47-0	**FRONT SEAT ADJUSTER - Cont'd**				
23-47-350	DOWEL PIN, Electric Seat Adjuster Drive Unit	2	---- ---	6008 051	6008 051
23-47-352	SCREW, Electric Seat Adjuster Slave Unit Cap to Base	16	---- ---	6008 027	6008 027
	SCREW, Electric Seat Adjuster Drive Unit to Base	6	---- ---	6008 126	6008 126
23-47-383	PIVOT END, Electric Seat Adjuster Stabilizer Strut	2	---- ---	2080 329	2080 329
23-47-384	STRUT, Electric Seat Adjuster Stabilizer				
	Male	1	---- ---	2080 331	2080 331
	Female	1	---- ---	2080 330	2080 330
23-47-385	STUD, Electric Seat Adjuster Stabilizer to Floor Bracket	1	---- ---	2080 456	2080 456
23-47-386	WASHER, Electric Seat Adjuster Stabilizer Pivot End	2	---- ---	2080 466	2080 466
23-47-387	GUARD, Electric Seat Adjuster Track Rear Lever	2	---- ---	2080 478	2080 478
23-47-413	SPRING, Electric Seat Adjuster Drive Unit Gear Selector Lever and Shaft	3	---- ---	1819 230	1819 230
23-47-414	COIL PACKAGE, Electric Seat Adjuster Drive Unit Solenoid	1	---- ---	1830 290	1830 290
23-47-423	CIRCUIT BREAKER, Electric Seat Adjuster 40 Amps.	1	---- ---	1769 967	1769 967
23-47-425	RELAY, Electric Seat Adjuster Motor	1	---- ---	1779 890	1779 890
23-47-427	SCREW and WASHER, Electric Seat Adjuster Motor Relay Mounting	2	---- ---	6008 110	6008 110
23-47-430	MOTOR, Electric Seat Adjuster	1	---- ---	1779 055	1779 055
23-47-431	TUBE, Electric Seat Adjuster Drive Unit to Slave Unit Cable				
	Front Control, Left, Short . . .	1	---- ---	1830 216	1830 216
	Rear Control, Left, Short . . .	1	---- ---	1830 217	1830 217
	Horizontal Control, Left, Short .	1	---- ---	1830 218	1830 218
	Except SD3 w/BRACKETS, Right, Long . .	1	---- ---	*2162 390	*1830 212
	SD3	1	---- ---	*1830 212	
23-47-432	COUPLING, Electric Seat Adjuster Motor to Mechanism or Drive Unit	1	---- ---	1594 834	1594 834
	CABLE, Electric Seat Adjuster Drive Unit to Slave Unit				
	Except SD3 Front Control, Long	1	---- ---	*2162 391	*1830 344
	SD3	1	---- ---	*1830 344	
	SP1, SP2, SD1, SD2, SD3 Short	1	---- ---	1830 345	1830 345
	Except SD3 Rear Control, Long.	1	---- ---	*2162 392	*1830 346
	SD3	1	---- ---	*1830 346	
	SP1, SP2, SD1, SD2, SD3 Short	1	---- ---	*1830 347	*1830 347
	Except SD3 Horizontal Control, Long . . .	1	---- ---	*2162 393	*1830 348
	SD3	1	---- ---	*1830 348	
	SP1, SP2, SD1, SD2, SD3 Short	1	---- ---	*1830 349	*1830 349
23-47-446	SWITCH, Electric Seat Adjuster	1	---- ---	1972 598	1972 598
	Sp. Cl. Cp., Cv. Cp., SC2 w/Bucket Seats	1	---- ---	---- ---	2096 658
23-47-451	BEZEL, Electric Seat Adjuster Switch				
	SP1H, SP2H, SD1H, SD2H	1	---- ---	2161 261	
	Sp. Cl. Cp., Cv. Cp., SC2	1	---- ---	---- ---	2080 946

★ Indicates use as required.
⊟ Indicates parts not listed in any previous parts book.
May 1, 1962 Supersedes Nov. 30, 1961.

Printed in U.S.A.
Prices and specifications subject to change without notice.
Right and left part numbers are on same line, first number is right, second number is left.
* Indicates change or addition.

MyMopar.com

CODE	PART NAME AND DESCRIPTION	PER CAR	VALIANT LANCER	PLYMOUTH DODGE	CHRYSLER IMPERIAL
23-47-0	**FRONT SEAT ADJUSTER - Cont'd**				
23-47-454	BRUSH and SPRING PACKAGE, Electric Seat Adjuster Motor	1	---- ---	1297 879	1297 879
23-47-457	KNOB, Electric Seat Adjuster Switch	1	---- ---	2096 022	2096 022
23-47-458	STUD, Electric Seat Adjuster Switch and Bezel	2	---- ---	6010 020	
23-48-0	**SECOND AND THIRD SEAT**				
23-48-6	SPACER, Seat Back to Cushion Down Position				
	Sub., SD3	2	---- ---	1884 737	1884 737
23-48-11	PIN, Third Seat Back Support Hinge				
	Sub., except SD3	2	---- ---	6022 839	
	SD3	1	---- ---	1960 627	1960 627
	PIN, Seat Back Hinge				
	Sub., except SD3	2	---- ---	2251 544	
23-48-19	STRIKER, Third Seat Back Support				
	Sub., except SD3	2	---- ---	2251 539	
	STRIKER, Seat Back Frame				
	Sub., except SD3 Second Seat, Right	1	*2082 245	⊟2423 560	
	Left	1	*2082 244	⊟2423 561	
	Sub., except SD3 Third Seat	2	---- ---	*2251 678	*1960 503
	SD3	2	---- ---	1960 503	
	Sub. Second Seat, on Wheelhouse	1	---- ---	1961 438-9	1961 438-9
	RETAINER, Second Seat Back-Up Position, on Wheelhouse				
	Sub., except SD3 Right	1	1961 488	1961 488	
	Left	1	2083 126	2251 550	
	LATCH, Third Seat Back Retainer				
	Sub., SD3	2	---- ---	1775 440	1775 440
23-48-20	HANDLE, Third Seat Back Release				
	Sub., except SD3 w/o Lock	1	---- ---	2251 325	
	w/LOCK	1	---- ---	2251 680	
	HANDLE, Seat Back and Seat Bottom Lift				
	Sub., SD3 Chrome	2	---- ---	1833 596	1833 596
23-48-21	ESCUTCHEON, Seat Back and Bottom Lift Handle				
	Sub., SD3 Chrome	2	---- ---	1833 597	1833 597
	White	2	---- ---	1775 814	1775 814
23-48-22	SPRING, Third Seat Back Release Handle				
	Sub., except SD3	1	---- ---	2251 676	
23-48-24	BRACKET, Third Seat Back Release Handle				
	Sub., except SD3	1	---- ---	2251 433	
23-48-28	BRACKET, Seat Back-Up Position on Wheelhouse				
	Sub., except SD3 Second Seat, Right	1	---- ---	2251 548	1961 230
	Left	1	---- ---	2251 548	1961 231
	SD3 Second Seat, Right	1	---- ---	1961 230	
	Left	1	---- ---	1961 231	
	SUPPORT, Seat Back-Up Position on Wheelhouse				
	Sub., SD3 Third Seat	2	---- ---	1878 641	1878 641
23-48-43	RETAINER, Second Seat Back Spring End				
	Sub., except SD3	2	---- ---	2254 575	
23-48-49	ROD, Second Seat Back Latch Actuating				
	Sub., SD3	1	---- ---	1961 091	1961 091

★ Indicates use as required.
⊟ Indicates parts not listed in any previous parts book.
Right and left part numbers are on same line, first number is right, second number is left.
* Indicates change or addition.

Printed in U.S.A.
Prices and specifications subject to change without notice.

March 8, 1963 Supersedes May 1, 1962.

MyMopar.com

CODE	PART NAME AND DESCRIPTION	PER CAR	VALIANT LANCER	PLYMOUTH DODGE	CHRYSLER IMPERIAL
23-48-0	**SECOND AND THIRD SEAT - Cont'd**				
23-48-50	PIN, Second Seat Back Latch Handle Stop				
	Sub., SD3	2	---- ---	1961 085	1961 085
	CLEVIS PIN, Third Seat Back Release, Sub., except SD3	1	---- ---	⊟6023 039	
23-48-51	HANDLE, Second Seat Back Latch				
	Sub., SD3	1	---- ---	1961 436-7	1961 436-7
23-48-52	SPRING, Second Seat Back Latch Handle Retaining				
	Sub., SD3	1	---- ---	1961 692-3	1961 692-3
23-48-55	SNAP RING, Third Seat Back Release Handle Clevis Pin				
	Sub., except SD3	1	---- ---	1322 503	
23-48-65	PANEL, Second Seat Back				
	Sub., except SD3	1	1959 646	2251 898	1878 652
	SD3	1	---- ---	1878 652	
23-48-76	SCREW, Second Seat Back Hinge				
	Sub.	4	---- ---	6023 227	
	SCREW, Third Seat Back Hinge, Sub.	★	---- ---	1964 747	
	SCREW and WASHER, Second Seat Back Hinge Support Sub.	8	---- ---	2082 867	
23-48-84	RETAINER, Third Seat Bottom Hinge Tapping				
	Sub.	2	---- ---	---- ---	1960 496
23-48-87	SUPPORT and PIN, Second Seat Bottom Hinge				
	Sub., SD3	1	---- ---	1877 926-7	1877 926-7
23-48-90	TAPPING PLATE, Second Seat Back Hinge to Frame				
	Sub., except SD3	2	---- ---	2254 577	
	TAPPING PLATE, Third Seat Bottom Hinge				
	Sub., SD3	2	---- ---	2189 290	1884 740
23-48-93	BUMPER, Seat Back-Up Position on Wheelhouse				
	Sub., except SD3 Second Seat	2	1960 719	1960 719	2094 592
	Third Seat	2	---- ---	---- ---	1835 109
	Sub., SD3 Second Seat	2	---- ---	2094 592	
	BUMPER, Second Seat Bottom Hinge Support				
	Sub., SD3	2	---- ---	1380 060	1380 060
23-48-94	RETAINER, Third Seat Back-Up Position Latch and Bumper Mounting Bolt				
	Sub., SD3	2	---- ---	6000 177	6000 177
23-48-98	HINGE, Second Seat Back				
	Sub., except SD3	1	2082 402-3	2251 546-7	
	HINGE and BEARING, Second Seat Bottom Seat Half				
	Sub., SD3	1	---- ---	1878 910-1	1878 910-1
23-48-99	SUPPORT, Second Seat Back Hinge				
	Sub.	1	2243 426-7		
	SUPPORT, Third Seat Back Hinge on Inner Panel				
	Sub., except SD3	2	---- ---	2255 627	
23-48-101	LEG, Second Seat Bottom				
	Sub., SD3	1	---- ---	2093 236-7	2093 236-7
23-48-105	SPACER, Second Seat Bottom Hinge Support to Floor Pan				
	Sub., SD3 Front	1	---- ---	2188 616	2188 616
23-48-108	SPRING, Second Seat Bottom Leg				
	Sub., SD3	1	---- ---	2093 646-7	2093 646-7

★ Indicates use as required.
⊟ Indicates parts not listed in any previous parts book.

Printed in U.S.A.
Prices and specifications subject to change without notice.
Right and left part numbers are on same line, first number is right, second number is left.
* Indicates change or addition.

MyMopar.com

CODE	PART NAME AND DESCRIPTION	PER CAR	VALIANT LANCER	PLYMOUTH DODGE	CHRYSLER IMPERIAL
23-48-0	**SECOND AND THIRD SEAT - Cont'd**				
23-48-112	PANEL and HINGES, Second Seat Bottom				
	Sub., SD3	1	---- ---	1878 769	1878 769
23-48-116	WASHER, Second Seat Bottom Leg to Pivot Bolt Spring				
	Sub., SD3	★	---- ---	6022 153	6022 153
23-48-121	HINGE, Third Seat Back				
	Sub., SD3 Body Half	1	---- ---	1878 170-1	1878 170-1
	HINGE, Third Seat Bottom				
	Sub., SD3 Body Half	1	---- ---	2094 130-1	2094 130-1
23-48-148	PIN, Second Seat Back Pivot				
	Sub., except SD3 Includes BRACKET	1	---- ---	*1878 600-1	*1878 600-1
	PIN, Second Seat Back Hinge Support				
	Sub.	2	1952 482		
23-48-149	WASHER, Second Seat Bottom Hinge Support Pivot Pin				
	Sub., SD3	★	---- ---	6022 968	6022 968
23-48-166	SCREW and WASHER, Seat Back Hinge				
	Sub. Second	★	---- ---	6022 242	
	SD3 Third	★	---- ---	6022 540	6022 540
	SCREW and WASHER, Seat Bottom Hinge				
	Sub. Second	★	---- ---	---- ---	6022 287
	Third	★	---- ---	---- ---	1964 747
23-48-180	PANEL and HINGES, Third Seat Cushion Bottom				
	Sub., SD3	1	---- ---	1878 755	1878 755
23-48-188	PANEL, Third Seat Back Support				
	Sub., except SD3	1	---- ---	*2253 239	
	PANEL, w/HINGES, Third Seat Back				
	Sub., except SD3	1	---- ---	*2253 240	*1878 592
	SD3	1	---- ---	1878 592	1878 592
23-48-189	BRACKET, Second Seat Back Panel				
	Sub., except SD3	2	---- ---	2251 534	
23-51-0	**SIDE SILL AND BELT BAR**				
23-51-3	SILL, Body Side				
	SY1 Inner	1	---- ---	---- ---	2189 314-5
	Sp. 4 D., SY1 Outer	1	---- ---	---- ---	1861 268-9
23-51-5	PANEL, Body Side Sill Outer				
	4 D., SC1, SC2, except SD3	1	2242 346	2254 780-1	1952 962-3
	4 D., SD3, SC3	1	---- ---	*1952 962-3	*1952 916-7
	Sp. 4 D., Sp. 4 D. Sub., SC1,SC2, except SD3	1	---- ---	2254 780-1	1952 948-9
	Sp. 4 D., Sp. 4 D., Sub., SD3, SC3	1	---- ---	*1952 848-9	*1952 918-9
	Sub., except SD3	1	2242 346-7	2254 780-1	
	Sp. Cl. Cp., SC1,SC2, except SD3	1	2242 350-1	2166 006-7	1952 960-1
	Sp. Cl. Cp., SD3	1	---- ---	*1952 960-1	
	Sp. Cl. Cp., Cv. Cp., SY1	1	---- ---	---- ---	1877 786-7
	Cv. Cp., SC1,SC2, except SD3	1	---- ---	2252 278-9	1952 924-5
	Cv. Cp., SD3	1	---- ---	*1952 924-5	
	Cl. Sed.	1	2242 350-1	2166 006-7	
	PANEL, Body Side Sill Inner				
	SC1,SC2,SC3, except SD3				
	Front	1	2242 340-1	2251 566-7	1961 066-7
	SC1,SC2,SC3, except SD3				
	Rear	1	2242 342-3	2166 070-1	1861 014-5
	SD3 Front	1	---- ---	1961 066-7	
	SD3 Rear	1	---- ---	1861 014-5	

★ Indicates use as required.
⊟ Indicates parts not listed in any previous parts book.
Right and left part numbers are on same line, first number is right, second number is left.
* Indicates change or addition.

Printed in U.S.A.
Prices and specifications subject to change without notice.
March 8, 1963 Supersedes May 1, 1962.

MyMopar.com

CODE	PART NAME AND DESCRIPTION	PER CAR	VALIANT LANCER	PLYMOUTH DODGE	CHRYSLER IMPERIAL
23-51-0	**SIDE SILL AND BELT BAR - Cont'd**				
23-51-6	REINFORCEMENT, Body Side Sill Outer Panel				
	Sp. 4 D., except SD3	1	---- ---	2254 020-1	
	Sp. Cl. Cp., Cl. Sed.	1	2195 586-7		
	Cv. Cp., except SD3	1	---- ---	2166 146-7	
	Sp. Cl. Cp., Cv. Cp., SY1				
	Right	1	---- ---	---- ---	1861 418
	Left	1	---- ---	---- ---	1878 228
	Sp. 4 D., SY1 Right	1	---- ---	---- ---	1878 031
	Left	1	---- ---	---- ---	1878 227
	Sp. Cl. Cp., Cv. Cp., SY1, at No. 2 and 2A Hold-Down Bolt Right	1	---- ---	---- ---	1861 416
	Left	1	---- ---	---- ---	1878 226
	Sp. 4 D., SY1, at No. 3 and No. 3 A Hold-Down Bolt Front	1	---- ---	---- ---	1878 556-7
	Sp. 4 D., Sp. Cl. Cp., Cv. Cp., SY1 at No. 3 and 3 A Hold-Down Bolt Rear	1	---- ---	---- ---	1861 274-5
	REINFORCEMENT, Quarter Inside Panel to Outer Sill				
	Sp. Cl. Cp., Cv. Cp., SY1	2	---- ---	---- ---	1861 386
	REINFORCEMENT, Body Side Sill Inner Panel at Floor Pan				
	Cv. Cp., except SD3	1	---- ---	2254 612-3	
23-51-12	PLATE, Body Side Sill to Center Pillar Tie				
	Sp. 4 D., except SD3	1	---- ---	2254 120-1	
23-51-19	GUSSET, Body Side Sill Outside Panel				
	Sp. 4 D., except SD3 Front	1	---- ---	2254 014-5	
	Rear	1	---- ---	2254 016-7	
	Rear Intermediate	1	---- ---	2254 018-9	
	Front and Center Intermediate .	1	---- ---	2254 126-7	
23-51-41	BAR, Quarter Belt Side				
	Sp. Cl. Cp., SD3, SC1, SC2, SC3	1	---- ---	1878 428-9	1878 428-9
	Cv. Cp., SD3, SC1, SC2, SC3	1	---- ---	1964 626-7	1964 626-7
	Cv. Cp., SY1, except SD3	1	--------	2166 154-5	1877 494-5
	Sub., SD3, SC1, SC3	1	---- ---	1878 238-9	1878 238-9
	Sp. 4 D., SY1	1	---- ---	---- ---	1877 522-3
	Sp. Cl. Cp., SY1	1	---- ---	---- ---	1877 462-3
	Cv. Cp., SD3, SC1, SC2 Lower	1	---- ---	1963 996-7	1963 996-7
	BAR, Center Belt				
	Sp. Cl. Cp., SD3, SC1, SC2, SC3	1	---- ---	1877 975	1877 975
	BAR, Rear Belt Upper				
	Cv. Cp., SC1, SC2, except SD3	1	---- ---	2251 512	1950 584
	SD3	1	---- ---	1950 584	
23-51-43	CAP or COVER, Body Side Sill Panel Front End				
	SY1, except SD3	1	2242 344-5	2254 428-9	1861 270-1
23-51-45	PLUG, Belt Side Bar Sealing				
	Sub., SD3	3	---- ---	2093 981	2093 981
23-52-0	**SEAT SPRING**				
23-52-1	REPAIR PACKAGE-HELPER PACKAGE, Seat Cushion Spring				
	Except SD3 w/Manual Seat Adjuster	1	---- ---	*2410 028	
23-52-6	SPRING, Front Seat Cushion Outer Jack Helper				
	Sp. 4 D., except SD3	2	---- ---	2270 983	
23-52-15	BRACE, Front Seat Cushion Tension,				
	Cl. Sed., 4 D. Sed., Sub.	★	2410 050		

★ Indicates use as required.
⊟ Indicates parts not listed in any previous parts book.

Printed in U.S.A.
Prices and specifications subject to change without notice.
Right and left part numbers are on same line, first number is right, second number is left.
* Indicates change or addition.

MyMopar.com

CODE	PART NAME AND DESCRIPTION	PER CAR	VALIANT LANCER	PLYMOUTH DODGE	CHRYSLER IMPERIAL
23-54-0	**TAILGATE**				
23-54-1	LOCK, Tailgate				
	Sub., except SD3	1	2189 116-7	2251 466-7	2189 116-7
	SD3	1	---- ---	2189 116-7	
23-54-3	TAILGATE				
	Sub., except SD3	1	2259 221	2253 228	2253 190
	SD3	1	---- ---	2253 190	
23-54-4	HINGE, Tailgate				
	Sub., SD3	1	---- ---	2188 934-5	2188 934-5
	Sub., except SD3 Body Half, Right	1	2082 642	2251 304	
	Left	1	2082 643	2251 304	
	Tailgate Half, Right	1	2082 210	2251 302	
	Left	1	2082 727	2251 300	
23-54-5	REINFORCEMENT, Tailgate Hinge				
	Sub.	1	2081 182-3		
23-54-6	PLATE and BUMPER PACKAGE, Tailgate Lock Striker				
	Sub.	1	2299 448-9	2299 448-9	2299 448-9
	Shim	2	2299 447	2299 447	2299 447
23-54-11	NAMEPLATES, NAMELETTERS, ORNAMENTS and MEDALLIONS, Tailgate				
	NOTE: See Exterior Moulding Illustrations in Front of Group 23 - Body.				
23-54-17	PIN, Tailgate Hinge				
	Sub., except SD3	1	⊟2082 689	*2251 737-8	
23-54-20	BUSHING, Tailgate Hinge Mounting				
	Sub., SD3 Right	1	---- ---	2188 836	2188 836
	Left	1	---- ---	2188 628	2188 628
23-54-24	REINFORCEMENT, Tailgate Outside Panel Handle				
	Sub. w/Manual Window Lift	1	1776 875		
	w/Electric Window Lift	1	2082 248		
23-54-27	SHIM or SPACER, Tailgate Lock Striker				
	Sub.	★	2299 447	2299 447	2299 447
23-54-28	DUST GUARD, Tailgate Lower				
	Sub., SD3	1	---- ---	2188 504	2188 504
	SEAL, Tailgate Sill Panel to Rear Bumper				
	Sub., except SD3	1	---- ---	2252 169	
23-54-29	FASTENER, Tailgate Lower Dust Guard				
	Sub., SD3	10	---- ---	6006 104	6006 104
	CLIP, Tailgate Sill Panel to Rear Bumper Seal				
	Sub., except SD3	11	---- ---	2252 170	
23-54-31	SPRING, Tailgate Lock Lever				
	Sub.	2	1777 458	1777 458	1777 458
23-54-46	TUBING, Roof Rail Tailgate Glass Bumper Rubber				
	Sub., SD3 w/Electric Window Lifts	1	---- ---	2252 380	2252 380
23-54-50	BUMPER, Tailgate Inside Handle Mounting Bracket				
	Sub.	1	1777 881		
23-54-53	SEAL, Tailgate Access Cover to Tailgate Inner Panel				
	Sub., except SD3 Foam	1	---- ---	2254 763	2241 219
	SD3	1	---- ---	2241 219	

★ Indicates use as required.
⊟ Indicates parts not listed in any previous parts book.
Right and left part numbers are on same line, first number is right, second number is left.
* Indicates change or addition.

Printed in U.S.A.
Prices and specifications subject to change without notice.
March 8, 1963 Supersedes May 1, 1962.

MyMopar.com

CODE	PART NAME AND DESCRIPTION	PER CAR	VALIANT LANCER	PLYMOUTH DODGE	CHRYSLER IMPERIAL
23-54-0	**TAILGATE - Cont'd**				
23-54-59	BRACKET, Tailgate Window Down Position Stop				
	Sub., except SD3	2	---- ---	H2255 067	1878 584
	SD3	2	---- ---	*1878 584	
23-54-62	ANTI-RATTLE, Tailgate Window Regulator Arm Stud, except SD3	2	---- ---	*1336 419	
23-54-63	SCUFF PLATE, Tailgate Opening Sill				
	Sub., except SD3	2	---- ---	2162 499	
	SD3	1	---- ---	2080 012	2080 012
23-54-69	SCREW and WASHER, Tailgate Lock Striker Plate Sub.	4	6022 147	6022 147	6022 147
23-54-72	REGULATOR or PLATE and ARM, Tailgate Window				
	Sub., except SD3 Manual	1	2081 775	2251 270	
	Electric	1	2259 171	2299 686	2188 767
	Sub., SD3 Electric	1	---- ---	2188 767	
23-54-73	HANDLE PACKAGE, Complete, Tailgate Manual Window Regulator Outside				
	Sub.	1	*2196 620		
	HANDLE, Complete	1	---- ---	*2252 000	
23-54-74	SPRING, Tailgate Window Regulator Counter Balance				
	Sub., except SD3	1	2082 989	2251 358	1779 645
	Sub., SD3	1	---- ---	1779 645	
23-54-75	FLAP, Tailgate Handle				
	Sub., SD3 Rubber	1	---- ---	2080 673	2080 673
23-54-77	RING, Tailgate Manual Window Regulator Outside Handle				
	Sub.	1	1961 317	2299 736	
23-54-79	RETAINER, Tailgate Manual Window Regulator Outside Handle Knob				
	Sub.	1	1775 164	1775 164	
23-54-83	PIN, Tailgate Manual Window Regulator Outside Handle Knob				
	Sub.	1	6000 173		
23-54-87	RETAINER, Tailgate Window Regulator Stud to Glass Lower Channel				
	Sub.	2	6000 305		
23-54-90	PIN, Tailgate Window Regulator Arm Roller				
	Sub., SD3	2	---- ---	1960 969	1960 969
23-54-92	GASKET, Tailgate Window Regulator Outside Handle				
	Sub. Manual	1	1775 840		
	Electric	1	2299 897		
23-54-98	ROLLER, Tailgate Window Regulator Arm				
	Sub., SD3	2	---- ---	1878 310	1878 310
23-54-101	PIN, Tailgate Manual Window Regulator Handle Pivot Sub.	1	6000 004		
23-54-102	SET SCREW, Tailgate Manual Window Regulator Outside Handle Pivot Pin				
	Sub.	2	6000 003		

★ Indicates use as required.
⊟ Indicates parts not listed in any previous parts book.

Printed in U.S.A.
Prices and specifications subject to change without notice.
Right and left part numbers are on same line, first number is right, second number is left.
* Indicates change or addition.

MyMopar.com

CODE	PART NAME AND DESCRIPTION	PER CAR	VALIANT LANCER	PLYMOUTH DODGE	CHRYSLER IMPERIAL
23-54-0	**TAILGATE - Cont'd**				
23-54-103	BUMPER, Tailgate Window Glass Down Position Stop				
	Sub., except SD3 w/Manual Window Lift	2	1381 435	2255 206	1381 435
	w/Electric Window Lift	2	1381 435	2255 207	1381 435
	Sub., SD3	2	---- ---	1381 435	
23-54-107	MOUNTING PLATE, Tailgate Window Regulator				
	Sub., except SD3	1	---- ---	2251 710-1	
23-54-109	ROD, Tailgate Inside Handle Lock Actuating				
	Sub.	1	2081 781		
23-54-111	TEE BOLT, Tailgate Window Regulator Arm				
	Sub., SD3	2	---- ---	1960 968	1960 968
	STUD, Tailgate Window Regulator Arm, except SD3	2	---- ---	⊟2251 790	
23-54-125	SPACER, Tailgate Electric Window Lift Switch Mounting				
	Sub., SD1, SD2	1	---- ---	2290 270	
23-54-128	CLIP, Tailgate Manual Window Regulator Outside Handle Lock Pawl Spring Retaining				
	Sub.	1	1961 318	1961 318	
23-54-131	SCREW and WASHER, Tailgate Hinge Torsion Bar Clamp				
	Sub.	★	---- ---	---- ---	2094 890
23-54-133	SCREW and WASHER, Tailgate Hinge Torsion Bar Guide				
	Sub.	★	2083 101		
23-54-134	GUIDE, Tailgate Hinge Torsion Bar				
	Sub.	1	2082 752-3		
23-54-135	GUIDE PIN, Tailgate Hinge Torsion Bar Retainer				
	Sub.	1	2082 795		
23-54-136	PLATE, Tailgate Hinge Torsion Bar Guide				
	Sub., except SD3	2	---- ---	2251 269	
23-54-137	CAM, Tailgate Hinge Torsion Bar				
	Sub., SD3	1	---- ---	1960 197	1960 197
23-54-140	BAR, Tailgate Hinge Torsion				
	Sub., except SD3	1	2082 791	2251 795	1960 194
	SD3	1	---- ---	1960 194	
23-54-141	RETAINER or SUPPORT, Tailgate Hinge Torsion Bar				
	Sub. At Guide	1	2082 971		
	At Hinge	1	2082 207		
	RETAINER, Tailgate Torsion Bar Bearing				
	Sub., except SD3 End	1	---- ---	2251 694	
	Center	1	---- ---	2251 372	
23-54-142	BEARING, Tailgate Hinge Torsion Bar				
	Sub., SD3	2	2082 786	1960 187	1960 187
	Sub., except SD3 End	1	---- ---	2251 695	
	Center	1	---- ---	2251 293	
23-54-144	CLAMP, Tailgate Hinge Torsion Bar				
	Sub., except SD3	1	1960 195	2251 301	1960 195
	SD3	1	---- ---	1960 195	
	CLAMP, Tailgate Torsion Bar Retainer				
	Sub.	1	2082 794		

★ Indicates use as required.
⊟ Indicates parts not listed in any previous parts book.
Right and left part numbers are on same line, first number is right, second number is left.
* Indicates change or addition.

Printed in U.S.A.
Prices and specifications subject to change without notice.
March 8, 1963 Supersedes May 1, 1962.

MyMopar.com

CODE	PART NAME AND DESCRIPTION	PER CAR	VALIANT LANCER	PLYMOUTH DODGE	CHRYSLER IMPERIAL
23-54-0 TAILGATE - Cont'd					
23-54-145	ROLLER, Tailgate Hinge Torsion Bar				
	Sub., SD3	1	---- ---	1960 196	1960 196
23-54-147	BUMPER, Tailgate Down Position				
	Sub., SD3	1	---- ---	2188 466-7	2188 466-7
23-54-150	COVER, Tailgate Inside Panel				
	Sub., except SD3 Steel	1	2081 774	2251 312	1877 855
	SD3	1	---- ---	1877 855	
23-54-152	SHAFT or COUPLING, Tailgate Electric Window Lift Motor to Mechanism				
	Sub.	1	1778 955	1778 955	1778 955
23-54-160	MOTOR, Tailgate Electric Window Lift				
	Sub.	1	2259 200	2188 734	2188 734
23-54-165	MECHANISM, Tailgate Electric Window Lift				
	Sub., Except SD3	1	2188 735	2251 828	2188 735
	SD3	1	---- ---	2188 735	
23-54-166	SPRING, Tailgate Electric Window Lift Switch and Bezel Retaining				
	Sub., SD3 On Headliner	1	---- ---	1769 327	1769 327
23-54-167	SWITCH, Tailgate Electric Window Lift				
	Sub., except SD3 On Instrument Panel	1	1972 316	1972 316	2097 045
	SP1, SP2, SD1, SD2, SD3 Limit, on Tailgate	1	1887 946	1887 946	1887 946
	SP1, SP2, SD1, SD2, SD3 Lock, on Tailgate	1	2196 313	2196 313	2196 313
	Except SD3 On Headliner, includes BEZEL	1	---- ---	2290 109	2076 626
	SD3 Less Bezel	1	---- ---	2097 625	2097 625
	SD3 On Instrument Panel	1	---- ---	*2096 373	
23-54-169	KNOB, Tailgate Electric Window Lift Instrument Panel Switch				
	Sub., SP1, SP2	1	1887 591	1887 591	2257 955
	Sub., SD1, SD2	1	---- ---	2256 626	
	Sub., SD3	1	---- ---	2257 478	
23-54-170	BEZEL, Tailgate Electric Window Lift Instrument Panel Switch				
	Sub., SD1, SD2	1	1972 898	2256 616	
	SD3	1	---- ---	2197 500	
	Sub., SP1, SP2	1	---- ---	1972 898	
23-54-171	NUT, Tailgate Electric Window Lift Switch Mounting				
	Sub., SP1, SP2	1	1887 603	1887 603	1971 521
	Sub., SD1, SD2, except SD3	1	---- ---	1971 521	
	SD3	1	---- ---	1972 548	
23-54-176	CIRCUIT BREAKER, Tailgate Electric Window Lift				
	Sub.	1	1689 022	1689 022	1689 022
23-54-178	WIRING, Tailgate Window Lift				
	Sub., except SD3 Tailgate	1	2076 412	2258 077	2198 213
	Switch	1	2258 739	2258 099	
	Sub., SD3 Tailgate	1	---- ---	2198 213	
23-54-180	HANDLE, Tailgate Lock Remote Control				
	Sub., except SD3	1	2082 904	2251 344	1902 406
	SD3	1	---- ---	1902 406	
23-54-183	CAM, Tailgate Lock Remote Control Handle				
	Sub.	1	2082 485		

★ Indicates use as required.
⊟ Indicates parts not listed in any previous parts book.

Printed in U.S.A.
Prices and specifications subject to change without notice.
Right and left part numbers are on same line, first number is right, second number is left.
* Indicates change or addition.

MyMopar.com

CODE	PART NAME AND DESCRIPTION	PER CAR	VALIANT LANCER	PLYMOUTH DODGE	CHRYSLER IMPERIAL
23-54-0	**TAILGATE - Cont'd**				
23-54-184	ROD, Tailgate Lock Remote Control Handle to Lock				
	Sub., except SD3	1	---- ---	*2251 345	*2189 074
	Sub., SD3	1	---- ---	*2189 074	
23-54-186	SPRING, Tailgate Lock Remote Control Handle				
	Sub., SD3	1	---- ---	*1902 409	*1902 409
23-54-190	PIN, Tailgate Lock Remote Control Handle				
	Sub., SD3	1	*2082 907	*1902 410	*1902 410
23-54-191	RING, Tailgate Lock Remote Control Handle Retaining				
	Sub., SD3	1	---- ---	*1626 749	*1626 749
23-54-193	BEARING, Tailgate Lock Remote Control Rod				
	Sub., except SD3 Right	1	*2083 116	*2251 360	*2189 067
	Left	1	2083 117	2251 360	2189 067
	Sub., SD3	2	---- ---	*2189 067	
23-54-194	RETAINER, Tailgate Lock Remote Control Rod Bearing				
	Sub., except SD3	2	---- ---	*2251 746	*1961 119
	Sub., SD3	2	---- ---	*1961 119	
23-54-195	SCREW, Tailgate Handle to Latch Pin				
	Sub., SD3	2	---- ---	*1902 297	*1902 297
23-54-196	BRACKET, Tailgate Lock Remote Control Handle Mounting				
	Sub.	1	2082 908		
23-54-197	SCREW and WASHER, Tailgate Inside Handle Mounting Bracket				
	Sub.	2	6017 016		
23-54-198	STUD and RETAINER, Tailgate Inside Handle Mounting Bracket				
	Sub.	1	2082 987		
23-54-199	SPRING, Tailgate Inside Handle				
	Sub.	1	2082 906		
23-54-203	HOUSING, Tailgate Electric Window Lift Switch				
	Sub.	1	---- ---	---- ---	1972 146
23-54-204	GASKET, Tailgate Electric Window Lift Switch				
	Sub., except SD3	1	---- ---	*2290 110	
23-54-205	BUMPER, Tailgate Inside Handle				
	Sub., except SD3	1	---- ---	*2251 461	
23-54-207	RETAINER, Tailgate Inside Handle				
	Sub., except SD3	1	---- ---	*2251 747	
23-58-0	**FOLDING TOP**				
23-58-3	TOP, Folding				
	Cv. Cp., SC1, SC2, except SD3	1	---- ---	*2251 173	*1952 312
	Cv. Cp., SD3, SY1	1	---- ---	*1952 312	*2094 745
	NOTE: Above Assemblies less Lift Mechanism and Trim.				
23-58-66	BOLT, Folding Top Rear Bow to Wheelhouse Bracket Tension Cable				
	Cv. Cp., SC1, SC2	2	---- ---	6022 169	6022 169

★ Indicates use as required.
⊟ Indicates parts not listed in any previous parts book.
Right and left part numbers are on same line, first number is right, second number is left.
* Indicates change or addition.

Printed in U.S.A.
Prices and specifications subject to change without notice.
May 1, 1962 Supersedes Nov. 30, 1961.

MyMopar.com

CODE	PART NAME AND DESCRIPTION	PER CAR	VALIANT LANCER	PLYMOUTH DODGE	CHRYSLER IMPERIAL
23-58-0	**FOLDING TOP - Cont'd**				
23-58-67	BRACKET, Folding Top to Quarter Belt Bar Bow Tension Cable				
	Cv. Cp., SC1, SC2	2	---- ---	1954 604	1954 604
23-58-75	BOW, Folding Top				
	Cv. Cp., SC1, SC2, except SD3				
	No. 1	1	---- ---	2189 744	1964 078
	No. 2	1	---- ---	2189 745	1964 073
	No. 3	1	---- ---	2189 746	1952 195
	Cv. Cp., SD3, SY1 No. 1	1	---- ---	1964 078	1691 415
	No. 2	1	---- ---	1964 073	1691 397
	No. 3	1	---- ---	1952 195	1691 400
23-58-76	LINK, Folding Top Rear Bow				
	Cv. Cp., SC1, SC2, except SD3	1	---- ---	2251 128-9	1950 500-1
	Cv. Cp., SD3	1	---- ---	1950 500-1	
	EXTENSION, Folding Top Rear Bow				
	Cv. Cp., SY1	1	---- ---	---- ---	1691 902-3
23-58-78	PLATE, Folding Top Number One Bow Bracket to Link Adjusting				
	Cv. Cp., SD3, SC1, SC2	2	---- ---	1909 914	1909 914
23-58-80	BUMPER, Folding Top Front Bow				
	Cv. Cp., SY1	2	---- ---	---- ---	⊟2424 042
23-58-82	RETAINER, Folding Top Front Bow Bumper,				
	Cv. Cp., SY1	2	---- ---	---- ---	⊟2424 043
23-58-85	BRACKET, Folding Top Rear Bow Down Stop				
	Cv. Cp., SD3, SC1, SC2	2	---- ---	2165 669	2165 669
23-58-189	WIRING, Folding Top Lift and Pocket Panel Lamp				
	Cv. Cp., SP2, SD2	1	---- ---	2258 428	
23-58-200	CYLINDER, Folding Top Lift Operating				
	Cv. Cp., SC1, SC2	2	---- ---	1952 938	1952 938
	SY1	1	---- ---	---- ---	1770 552-3
23-58-208	BRACKET, Folding Top Lift Cylinder Floor Pan Mounting				
	Cv. Cp., SP2, SD2	1	---- ---	2253 024-5	
	Cv. Cp., SD3, SC1, SC2	2	---- ---	1952 939	1952 939
	Cv. Cp., SY1	2	---- ---	---- ---	1861 392
23-58-209	SPACER, Folding Top Lift Cylinder Mounting Bracket				
	Cv. Cp., SC1, SC2	2	---- ---	1249 332	1249 332
23-58-220	HEADER, Folding Top				
	Cv. Cp., SP2, SD2, SC1, SC2	1	---- ---	2251 980	2166 338
	Cv. Cp., SD3, SY1	1	---- ---	2166 338	1751 094
23-58-227	MECHANISM, Folding Top Header Locking				
	Cv. Cp., SD3, SC1, SC2	1	---- ---	2166 049	2166 049
23-58-228	DOWEL, Folding Top Header				
	Cv. Cp., SP2, SD2, SC1, SC2	2	---- ---	2251 647	1909 466
	Cv. Cp., SD3, SY1	2	---- ---	1909 466	6006 235
23-58-229	RETAINER, Folding Top Header Dowel				
	Cv. Cp., SY1	2	---- ---	---- ---	1691 911
23-58-232	COVER, Folding Top Header Lock Mechanism Access Hole				
	Cv. Cp., SY1 6 7/16" long	1	---- ---	---- ---	1750 777
	COVER, Folding Top Header Lock Access Hole				
	Cv. Cp., SY1 7 3/8" long	1	---- ---	---- ---	1750 854-5
23-58-234	CLIP, Folding Top Header Lock Handle Torsion Bar to Link				
	Cv. Cp., SY1	1	---- ---	---- ---	6006 221

★ Indicates use as required.
⊟ Indicates parts not listed in any previous parts book.

Printed in U.S.A.
Prices and specifications subject to change without notice.

Right and left part numbers are on same line, first number is right, second number is left.
* Indicates change or addition.

MyMopar.com

CODE	PART NAME AND DESCRIPTION	PER CAR	VALIANT LANCER	PLYMOUTH DODGE	CHRYSLER IMPERIAL
23-58-0	**FOLDING TOP - Cont'd**				
23-58-236	SCREW, Folding Top Header Lock Adjusting				
	Cv. Cp., SD3, SC1, SC2	2	---- ---	*1964 896	*1964 896
23-58-237	SEAL, Windshield Header				
	Cv. Cp., SD3, SC1, SC2				
	Length 60"	1	---- ---	*2094 559	*2094 559
23-58-240	PANEL, Folding Top Header Outside Finish				
	Cv. Cp., SD3, SC1, SC2	1	---- ---	*1954 020	*1954 020
	MOULDING PACKAGE, Folding Top Header Outside Finish				
	Cv. Cp., SY1	1	---- ---	---- ---	2196 483
	SCREW	11	---- ---	---- ---	274 110
23-58-242	CLIP, Folding Top Header Outside Finish Panel				
	Cv. Cp., SD3, SC1, SC2	5	---- ---	*6000 680	*6000 680
	END	2	---- ---	*6000 681	6000 681
23-58-243	HANDLE, Folding Top Header Lock				
	Cv. Cp., SP2, SD2, SY1	1	---- ---	*2251 116	*1751 156
23-58-245	PIN, Folding Top Header Lock Handle to Link				
	Cv. Cp., SY1	1	---- ---	---- ---	6006 222
23-58-248	RETAINER, Folding Top Header Lock Handle to Escutcheon Pin				
	Cv. Cp., SY1	2	---- ---	---- ---	1750 724
23-58-253	ESCUTCHEON, Folding Top Header Lock Handle				
	Cv. Cp., SY1	1	---- ---	---- ---	1751 173
23-58-257	LINK, Folding Top Header Lock Handle to Torsion Bar				
	Cv. Cp., SP2, SD2, SY1	1	---- ---	*2251 118	*1750 619
23-58-258	HOUSING, Folding Top Header Locking Mechanism Handle				
	Cv. Cp., SP2, SD2	1	---- ---	*2251 115	
23-58-262	LATCH, Folding Top Header Locking Mechanism Handle				
	Cv. Cp., SP2, SD2	2	---- ---	*2251 117	
23-58-265	CATCH, Folding Top Header Locking Latch				
	Cv. Cp., SP2, SD2, SC1, SC2	2	---- ---	*2189 690	*1964 895
	Cv. Cp., SD3	2	---- ---	*1964 895	
	CATCH, Folding Top Header Lock Safety				
	Cv. Cp., SY1	2	---- ---	---- ---	1751 264
23-58-266	SPRING, Folding Top Header Lock Safety Catch to Handle				
	Cv. Cp., SY1	1	---- ---	---- ---	1751 262
23-58-269	LINKAGE, Folding Top Side Rail				
	Cv. Cp., SD3, SC1, SC2	1	---- ---	*1964 076-7	*1964 076-7
	Cv. Cp., SY1, except SD3	1	---- ---	*2251 856-7	*1751 206-7
23-58-333	LINK, Folding Top Power				
	Cv. Cp., SP2, SD2	2	---- ---	*2251 858	
	Cv. Cp., SD3, SC1, SC2				
	Includes Power Guide LINK . .	1	---- ---	*2166 610-1	*2166 610-1
	Cv. Cp., SY1 Inner	2	---- ---	---- ---	1751 210
	Outer	2	---- ---	---- ---	1750 400

★ Indicates use as required.
⊟ Indicates parts not listed in any previous parts book.
Right and left part numbers are on same line, first number is right, second number is left.
* Indicates change or addition.

Printed in U.S.A.
Prices and specifications subject to change without notice.
May 1, 1962 Supersedes Nov. 30, 1961.

MyMopar.com

CODE	PART NAME AND DESCRIPTION	PER CAR	VALIANT LANCER	PLYMOUTH DODGE	CHRYSLER IMPERIAL
23-58-0	**FOLDING TOP - Cont'd**				
23-58-335	TAPPING PLATE, Folding Top Power Guide Link Support				
	Cv. Cp., SP2, SD2, SC1, SC2	2	---- ---	*2254 714	*6000 388
	Cv. Cp., SD3	2	---- ---	*6000 388	
	TAPPING PLATE, Folding Top Control Prop Support				
	Cv. Cp., SP2, SD2, SC1, SC2	2	---- ---	*2189 735	*6000 388
	Cv. Cp., SD3	2	---- ---	*6000 388	
23-58-336	SUPPORT, Folding Top Power Guide Link				
	Cv. Cp., SP2, SD2, SC1, SC2	2	---- ---	*2254 712	*1708 914
	Cv. Cp., SD3	2	---- ---	*1708 914	
	SUPPORT, Folding Top Control Prop				
	Cv. Cp., SC1, SC2	2	---- ---	1708 914	1708 914
23-58-337	RETAINER, Folding Top Power Guide Link Support Tapping Plate				
	Cv. Cp., SP2, SD2	2	---- ---	*2254 715	
23-58-357	MOTOR, Folding Top Lift				
	Cv. Cp., SC1, SC2 Less Pump	1	---- ---	*2094 107	*2094 107
23-58-364	PLUG, Folding Top Well Drain Valve				
	Cv. Cp., SC1, SC2	1	---- ---	2094 244	2094 244
	Cv. Cp., SY1	1	---- ---	---- ---	1977 449
23-58-365	RETAINER, Folding Top Well Drain Valve Plug				
	Cv. Cp.	1	---- ---	1977 448	1977 448
23-58-375	"O" RING, Folding Top Lift Motor Pump Drive Shaft				
	Cv. Cp.	1	---- ---	*1641 590	*1641 590
23-58-380	BRUSH and SPRING PACKAGE, Folding Top Lift Motor				
	Cv. Cp.	1	---- ---	1752 518	1752 518
23-58-381	ROTOR PACKAGE, Folding Top Lift Pump				
	Cv. Cp.	1	---- ---	1641 650	1641 650
23-58-393	SUPPORT, Folding Top Lift Motor and Pump Floor Pan				
	Cv. Cp., SY1	1	---- ---	---- ---	1878 112
23-58-394	PILLAR or RAIL, Folding Top Folding				
	Cv. Cp., SY1	1	---- ---	---- ---	1691 946-7
	Cv. Cp., SD3, SC1, SC2	1	---- ---	*1884 584-5	*1884 584-5
23-58-395	PLUG, Folding Top Lift Motor and Pump Reservoir				
	Cv. Cp.	1	---- ---	*1641 579	*1641 579
23-58-396	BRACKET, Folding Top Lift Motor Mounting				
	Cv. Cp.	1	---- ---	*1641 578	*1641 578
23-58-430	PLATE, Folding Top Lift Pump Cover				
	Cv. Cp. Includes Valve Rocker ARM . .	1	---- ---	*1641 592	*1641 592
	PLATE, Folding Top Lift Pump Cover End				
	Cv. Cp. Includes BUSHING	1	---- ---	*1641 586	1641 586
23-58-469	PROP, Folding Top Main Control				
	Cv. Cp., SP2, SD2, SC1, SC2	1	---- ---	*2251 142-3	*1884 580-1
	Cv. Cp., SD3	1	---- ---	*1884 580-1	
	LINK, Folding Top Main Control				
	Cv. Cp., SY1 Includes Adjusting PLATE . . .	1	---- ---	---- ---	1751 208-9
23-58-472	BRACKET, Folding Top Folding Rail Pivot				
	Cv. Cp., SY1	1	---- ---	---- ---	1691 948-9

★ Indicates use as required.
⊟ Indicates parts not listed in any previous parts book.

Printed in U.S.A.
Prices and specifications subject to change without notice.
Right and left part numbers are on same line, first number is right, second number is left.
* Indicates change or addition.

MyMopar.com

CODE	PART NAME AND DESCRIPTION	PER CAR	VALIANT LANCER	PLYMOUTH DODGE	CHRYSLER IMPERIAL
23-58-O	**FOLDING TOP - Cont'd**				
23-58-473	SUPPORT, Folding Top Folding Pillar to Body				
	Cv. Cp., SD3, SC1, SC2	1	---- ---	*1884 608-9	*1884 608-9
	BRACKET, Folding Top Folding Rail Pivot Bracket to Body Mounting Support				
	Cv. Cp., SY1	1	---- ---	---- ---	1750 406-7
23-58-475	PLATE, Folding Top Main Control Support Adjustment				
	Cv. Cp., SP2, SD2, SC1, SC2	2	---- ---	*2189 711	*1954 824
	Cv. Cp., SD3	2	---- ---	*1954 824	
23-58-476	BRACE, Folding Top Main Control Prop Body				
	Cv. Cp., SD3, SC1, SC2	1	---- ---	*1884 506-7	*1884 506-7
	SUPPORT, Folding Top Main Control Link and Pivot Bracket Mounting Bracket Body				
	Cv. Cp., SY1	1	---- ---	---- ---	1961 088-9
23-58-480	REINFORCEMENT, Folding Top Rear Side Rail Support				
	Cv. Cp., SP2, SD2	1	---- ---	*2166 232-3	
	REINFORCEMENT, Folding Top Main Control Link Adjustment Plate Body				
	Cv. Cp., SY1	1	---- ---	---- ---	1751 806-7
	REINFORCEMENT, Folding Top Folding Rail Pivot Bracket Mounting Bracket to Body Mounting				
	Cv. Cp., SY1	2	---- ---	---- ---	1751 810
23-58-486	RAIL, Folding Top Side				
	Cv. Cp., SP2, SD2, SC1, SC2				
	Front	1	---- ---	*2189 742-3	*1884 588-9
	Center	1	---- ---	2189 736-7	
	Rear	1	---- ---	2189 758-9	1884 590-1
	Cv. Cp., SD3, SY1 Front	1	---- ---	*1884 588-9	*2094 466-7
	Rear	1	---- ---	*1884 590-1	2094 472-3
23-58-487	BUSHING, Folding Top Folding Rail to Body Pivot Bracket Pin Plastic				
	Cv. Cp., SY1 7/8" length	2	---- ---	---- ---	1810 440
	BUSHING, Folding Top Side Rail Link to Rear Rail Pin Plastic				
	Cv. Cp., SY1 7/32" length	2	---- ---	---- ---	1750 647
	BUSHING, Folding Top Power Link to Body Plastic				
	Cv. Cp., SY1 3/8" length	2	---- ---	---- ---	1750 648
23-58-497	CAP, Folding Top Front Side Rail to Header Joint				
	Cv. Cp., SP2, SD2, SC1, SC2				
	Right	1	---- ---	*2189 964	*1950 486
	Left	1	---- ---	2189 965	1950 486
	Cv. Cp., SD3	2	---- ---	*1950 486	
23-58-532	SWITCH, Folding Top Lift				
	Cv. Cp., SC1, SC2	1	---- ---	1972 316	1972 318
	Cv. Cp., SY1	1	---- ---	---- ---	2197 415
23-58-533	NUT, Folding Top Lift Switch Mounting				
	Cv. Cp., SP2, SC1, SC2, except SD3	1	---- ---	*1887 603	*1971 521
	Cv. Cp., SD3	1	---- ---	*1972 548	
23-58-534	KNOB, Folding Top Lift Switch Control				
	Cv. Cp., SP2, SC1, SC2	1	---- ---	1887 591	2257 955
	Cv. Cp., SD2, SY1	1	---- ---	2256 614	1887 935
	Cv. Cp., SD3	1	---- ---	*2257 478	

★ Indicates use as required.
⊟ Indicates parts not listed in any previous parts book.
Right and left part numbers are on same line, first number is right, second number is left.
* Indicates change or addition.

Printed in U.S.A.
Prices and specifications subject to change without notice.
May 1, 1962 Supersedes Nov. 30, 1961.

MyMopar.com

CODE	PART NAME AND DESCRIPTION	PER CAR	VALIANT LANCER	PLYMOUTH DODGE	CHRYSLER IMPERIAL
23-58-0	**FOLDING TOP - Cont'd**				
23-58-535	HOUSING, Folding Top Lift Switch				
	Cv. Cp., SC1, SC2	1	---- ---	---- ---	2291 149
23-58-543	BEZEL, Folding Top Lift Switch Control				
	Cv. Cp., SP2, SC1, SC2	1	---- ---	1972 899	1972 489
	Cv. Cp., SD2, SY1	1	---- ---	2256 616	2197 389
	Cv. Cp., SD3	1	---- ---	*2197 501	
23-58-552	NAME PLATE, Folding Top Lift Switch				
	Cv. Cp., SY1	1	---- ---	---- ---	*2197 508
23-58-555	HOSE, Folding Top Lift Pump to Cylinder				
	Cv. Cp. Upper	1	---- ---	1964 402	1964 402
	Cv. Cp., SC1, SC2 Lower	1	---- ---	1964 402	1964 402
	Cv. Cp., SY1 Lower	1	---- ---	---- ---	*2094 119
23-58-569	WEATHERSTRIP, Folding Top Header				
	Cv. Cp., SP2, SD2	1	---- ---	*2251 174	
	Cv. Cp., SD3, SC1, SC2				
	End	1	---- ---	*2166 960-1	*2166 960-1
	Center	1	---- ---	*2166 958	2166 958
	Cv. Cp., SY1 Inner	1	---- ---	---- ---	1751 733
	Outer	1	---- ---	---- ---	1860 995
	Upper Corner Moulding	1	---- ---	---- ---	1861 334-5
23-58-570	RETAINER, Folding Top Header Weatherstrip				
	Cv. Cp., SP2, SD2 Center	1	---- ---	*2251 899	
23-58-572	WEATHERSTRIP, Folding Top Side Rail				
	Cv. Cp., SP2, SD2, SC1, SC2				
	Front	1	---- ---	*2189 798-9	*1950 844-5
	Center	1	---- ---	2189 800-1	
	Rear	1	---- ---	2189 802-3	1950 848-9
	Cv. Cp., SD3, SY1 Front	1	---- ---	*1950 844-5	*1810 002-3
	Rear	1	---- ---	*1950 848-9	1810 004-5
23-58-573	RETAINER, Folding Top Side Rail Weatherstrip				
	Cv. Cp., SP2, SD2, SC1, SC2				
	Front, Right	1	---- ---	*2251 156	*1954 942
	Left	1	---- ---	2251 157	1954 942
	Center	1	---- ---	2251 154-5	
	Rear	1	---- ---	2251 152-3	1954 938-9
	Cv. Cp., SD3 Front	2	---- ---	*1954 942	
	Rear	1	---- ---	*1954 938-9	
23-58-590	WEATHERSTRIP, Folding Top Folding Pillar or Rail				
	Cv. Cp., SD3, SC1, SC2	1	---- ---	*1950 852-3	*1950 852-3
	Cv. Cp., SY1	1	---- ---	---- ---	1810 006-7
23-58-591	RETAINER, Folding Top Folding Pillar Weatherstrip				
	Cv. Cp., SD3, SC1, SC2	1	---- ---	*1954 934-5	*1954 934-5
23-58-601	SET SCREW, Folding Top Power Guide and Prop Support				
	Cv. Cp., SC1, SC2	★	---- ---	6000 182	6000 182
	SET SCREW, Folding Top Side Front Rail				
	Cv. Cp., SC1, SC2 Front	★	---- ---	1964 260	
	Center	★	---- ---	1964 260	
	Cv. Cp., SD3, SC1, SC2				
	Rear	★	---- ---	*1964 260	*1964 260

★ Indicates use as required.
⊟ Indicates parts not listed in any previous parts book.

Printed in U.S.A.
Prices and specifications subject to change without notice.
Right and left part numbers are on same line, first number is right, second number is left.
* Indicates change or addition.

MyMopar.com

CODE	PART NAME AND DESCRIPTION	PER CAR	VALIANT LANCER	PLYMOUTH DODGE	CHRYSLER IMPERIAL
23-58-0	**FOLDING TOP - Cont'd**				
23-58-603	BOLT, Folding Top Power Guide Link and Main Control Prop Shoulder				
	Cv. Cp., SP2, SD2, SC1, SC2	4	---- ---	*6001 010	*1954 765
	Cv. Cp., SD3	4	---- ---	*1954 765	
	BOLT, Folding Top Control Link Adjusting Plate				
	Cv. Cp., SY1	2	---- ---	---- ---	6006 224
	SCREW, Folding Top Header Lock Torsion Bar Adjusting				
	Cv. Cp., SY1	2	---- ---	---- ---	1750 726
23-58-605	SPACER or WASHER, Folding Top				
	Cv. Cp., SC1, SC2				
	O.D. I.D. THICKNESS MATERIAL				
	1" 17/32" 1/16" Fibre	★	---- ---	1706 470	1706 470
	1" 19/32" 1/8" Fibre	★	---- ---	1952 983	1952 983
	5/8" 3/8" 1/16" Steel	★	---- ---	6000 320	6000 320
	13/16" 3/8" 1/5" Rubber	★	---- ---	2251 617	
	Cv. Cp., SY1				
	O.D. I.D. THICKNESS MATERIAL				
	13/16" 3/8" 13/64" Plastic	★	---- ---	*6006 204	6006 204
	X-WASHER, Folding Top				
	Cv. Cp., SY1	★	---- ---	---- ---	6006 052
23-58-606	SPRING WASHER, Folding Top				
	Cv. Cp., SC1, SC2	★	---- ---	6022 117	6022 117
	Cv. Cp., SY1	★	---- ---	---- ---	6006 216
23-58-607	PIN, Folding Top				
	Cv. Cp., SC1, SC2 — No. 1 Bow Bracket	2	---- ---	*1950 897	*1950 897
	SP2, SD2, SC1, SC2 — No. 1 Bow Bracket to Front Side Rail	2	---- ---	*2251 600	*1952 315
	SD3, SC1, SC2 — No. 1 Bow Bracket to Rear Side Rail	2	---- ---	*1952 315	*1952 315
	Main Control Prop	2	---- ---	*1952 315	*1952 315
	Front and Rear Side Rail Control Link	2	---- ---	*1952 315	*1952 315
	Rear Rail Power Link	2	---- ---	1952 482	
	Folding Pillar	2	---- ---	*1952 482	*1952 482
	SP2, SD2 — Center and Rear Rail	2	---- ---	*1952 779	
	SP2, SD2, SC1, SC2 — Side Rear Rail	2	---- ---	*2251 600	*1952 779
	SP2, SD2 — Rear Bow Link	2	---- ---	2251 600	1952 984
	Front and Center Side Rail Clevis	2	---- ---	6000 319	
	Side Rear Rail Clevis	2	---- ---	*6000 319	6000 319
	Cv. Cp., SY1 — Lift Cylinder Mounting Bracket	2	---- ---	---- ---	6006 093
	Control Link to Front Rail	2	---- ---	---- ---	6006 205
	Control Link to Center Rail	2	---- ---	---- ---	6006 223
	Rear Side Rail to Body Bracket	2	---- ---	---- ---	6006 226
	Power Link to Rear Rail	2	---- ---	---- ---	6006 227
	Power Link to Body Bracket Pivot	2	---- ---	---- ---	6006 228
	Front to Center Side Rail Pivot	2	---- ---	---- ---	6006 229
	Center Link to rear side rail	2	---- ---	---- ---	6006 230
	Rear Control Link to Center Side Rail	2	---- ---	---- ---	6006 230
	Center Bow to Rear Side Rail	2	---- ---	---- ---	6006 231
	Rear Bow to Rear Rail	2	---- ---	---- ---	6006 237

★ Indicates use as required.
⊟ Indicates parts not listed in any previous parts book.
Right and left part numbers are on same line, first number is right, second number is left.
* Indicates change or addition.

Printed in U.S.A.
Prices and specifications subject to change without notice.
May 1, 1962 Supersedes Nov. 30, 1961.

MyMopar.com

CODE	PART NAME AND DESCRIPTION	PER CAR	VALIANT LANCER	PLYMOUTH DODGE	CHRYSLER IMPERIAL
23-59-0	**DRAIN TROUGH**				
23-59-35	TROUGH, Deck Opening Panel Drain				
	Sp. 4 D., SY1H Upper	1	---- ---	---- ---	2189 382
	Cv. Cp., SP2 Side	1	---- ---	2251 514-5	
	Except Cv. Cp. and Sub., SP1, SP2 Side	1	---- ---	2166 948-9	
	Except Sub., SD1, SD2 Side	1	---- ---	2166 976-7	
23-59-37	REINFORCEMENT, Deck Opening Side Drain Trough				
	Except Sub., SY1	1	2083 136-7	---- ---	1877 472-3
23-59-41	BRACE, Quarter Panel Deck Opening Side Drain Trough to Hinge Support				
	Cv. Cp., SD2	1	---- ---	2251 622-3	
23-59-42	EXTENSION, Quarter Panel Deck Opening Drain Trough				
	Cv. Cp., SP2 Upper Corner	1	---- ---	2251 612-3	
	Cv. Cp., SD2 Upper Corner	1	---- ---	2251 614-5	
23-59-56	TROUGH, Roof Side Drain				
	4 D., Sp. 4 D., except SD3	1	*2081 252-3	*2166 318-9	
	Sub., except SD3	1	*2082 664-5	*2166 318-9	
	Sp. Cl. Cp., except SD3	1	*2195 796-7	*2166 930-1	
	Cl. Sed., except SD3	1	*2195 794-5	*2166 928-9	
	TROUGH, Roof Side Rear Drain				
	Sub.	1	2081 254-5		
	TROUGH, Roof Rear Drain				
	Sub., SD3	1	---- ---	*2094 134	*2094 134
	TROUGH, Roof Side Drain Front				
	SP2, SD2, except Cv. Cp. On Body Front Pillar	1	---- ---	*2167 786-7	
	TROUGH, Quarter Panel Deck Side Drain				
	Cv. Cp., SP2, SD2	1	---- ---	*2166 976-7	
23-59-57	CAP or COVER, Roof Side Drain Trough				
	NOTE: See Exterior Moulding Illustrations in Front of Group 23 - Body.				
23-59-61	MOULDING or COVER, Roof Side Drain Trough				
	NOTE: See Exterior Moulding Illustrations in Front of Group 23 - Body.				
23-61-0	**COWL VENT OR AIR INTAKE**				
23-61-39	EXTENSION, Dash Panel Cowl Air Intake Water Deflector Panel				
	SY1	1	---- ---	---- ---	1242 974
	DEFLECTOR, Dash Panel Cowl Air Intake Water				
	SY1	1	---- ---	---- ---	1810 453
23-61-99	CLIP, Cowl Ventilator Grille				
	SY1	★	---- ---	---- ---	6006 261
23-61-103	GRILLE, Cowl Ventilator				
	SY1	1	---- ---	---- ---	2093 580-1
23-61-104	CAP, Cowl Ventilator Grille				
	SY1	1	---- ---	---- ---	2189 985
23-61-116	PANEL, Cowl Top Fresh Air Opening Insert				
	SD3, SC1, SC2	1	---- ---	*2166 657	*2166 657

★ Indicates use as required.
⊟ Indicates parts not listed in any previous parts book.
May 1, 1962 Supersedes Nov. 30, 1961.

Printed in U.S.A.
Prices and specifications subject to change without notice.
Right and left part numbers are on same line, first number is right, second number is left.
* Indicates change or addition.

MyMopar.com

CODE	PART NAME AND DESCRIPTION	PER CAR	VALIANT LANCER	PLYMOUTH DODGE	CHRYSLER IMPERIAL
23-63-0	**WEATHERSTRIP**				
23-63-14	WEATHERSTRIP, Front Door Window Belt Inner				
	4 D., SV1L, SL1L, SC1, except SD3				
	Right	1	*2081 362	*2241 784	*1883 500
	Left	1	2081 362	2241 784	1883 500
	4 D., SV1H, SL1H, SC2, SC3				
	Right	1	2241 784	---- ---	2085 710
	Left	1	2241 784	---- ---	2085 711
	Sub., SV1L, SL1L, except SD3				
	Right	1	*2081 362	*2241 784	*2166 556
	Left	1	2081 362	2241 784	2166 557
	Sub., SV1H, SL1H Right	1	2241 784		
	Left	1	2241 784		
	Sp. 4 D., SC1,SC2,SC3, except SD3				
	Right	1	---- ---	*2167 674	
	Left	1	---- ---	2167 674	
	Sp. 4 D., Sp. 4 D. Sub., SD3,SC1,SC2,SC3	1	---- ---	*2085 712-3	*2085 712-3
	Sp. 4 D., SY1	1	---- ---	---- ---	2085 780-1
	Sp. Cl. Cp., Cv. Cp., SC1,SC2, except SD3				
	Right	1	*2241 784	*2167 674	*2166 552
	Left	1	2241 784	2167 674	2166 553
	Sp. Cl. Cp., Cv. Cp., SD3,SY1	1	---- ---	*2085 722-3	*2085 780-1
	Cl. Sed.	2	2195 268	2241 784	
	WEATHERSTRIP, Rear Door Window Belt Inner				
	4 D., SV1L,SL1L, except SD3				
	Right	1	*2081 465	*2167 706	*2085 482
	Left	1	2081 465	2167 707	2085 482
	4 D., SV1H, SL1H, SD3				
	Right	1	*2241 784	*2085 482	
	Left	1	2241 784	*2085 482	
	Sub., SV1L,SL1L, except SD3				
	Right	1	*2081 465	*2167 706	
	Left	1	2081 465	2167 707	
	Sub., SV1H, SL1H Right	1	2241 784	---- ---	2166 512
	Left	1	2241 784	---- ---	2166 513
	Sp. 4 D., SC1,SC2,SC3, except SD3	1	---- ---	*2241 954-5	*2166 512-3
	Sp. 4 D. SY1	2	---- ---	---- ---	1767 247
23-63-15	WEATHERSTRIP, Front Door Window Belt Outer				
	4 D., except SD3 Right	1	*2081 546	*2216 372	*1883 500
	Left	1	2081 546	2216 373	1883 500
	4 D., SD3 Right	1	---- ---	*1883 500	
	Left	1	---- ---	*1883 500	
	Sub., except SD3 Right	1	*2081 546	*2216 372	*2166 558
	Left	1	2081 546	2216 373	2166 559
	Sp. 4 D., SC1,SC2,SC3, except SD3	1	---- ---	*2216 372-3	*2166 558-9
	Sp. 4 D., Sp. 4 D. Sub., SD3	1	---- ---	*2166 558-9	
	Sp. 4 D., SY1	1	---- ---	---- ---	1751 706-7
	Sp. Cl. Cp., Cv. Cp., SC1,SC2, except SD3	1	*2195 806-7	*2167 686-7	*2166 554-5
	Sp. Cl. Cp., Cv. Cp., SD3,SY1	1	---- ---	*2166 554-5	*1751 708-9
	Cl. Sed. Right	1	2195 267	2216 374	
	Left	1	2195 267	2216 375	
	WEATHERSTRIP, Rear Door Window Belt Outer				
	4 D., except SD3 Right	1	*2081 546	*2167 710	*1883 512
	Left	1	2081 546	2167 711	1883 513
	4 D., SD3 Right	1	---- ---	*1883 512	
	Left	1	---- ---	*1883 513	
	Sub., except SD3 Right	1	*2081 546	*2167 710	*2166 516
	Left	1	2081 546	2167 711	2166 517
	Sub., SD3 Right	1	---- ---	*2166 516	
	Left	1	---- ---	*2166 517	
	Sp. 4 D., SC1,SC2,SC3, except SD3	1	---- ---	*2167 712-3	*2166 516-7
	Sp. 4 D., SY1	1	---- ---	---- ---	1751 724-5

★ Indicates use as required.
⊟ Indicates parts not listed in any previous parts book.
Right and left part numbers are on same line, first number is right, second number is left.
* Indicates change or addition.

Printed in U.S.A.
Prices and specifications subject to change without notice.
May 1, 1962 Supersedes Nov. 30, 1961.

MyMopar.com

CODE	PART NAME AND DESCRIPTION	PER CAR	VALIANT LANCER	PLYMOUTH DODGE	CHRYSLER IMPERIAL
23-63-0	**WEATHERSTRIP - Cont'd**				
23-63-16	CLIP, Window Belt Outer Weatherstrip Retaining				
	SC1, SC2, SC3	★	1775 089	1775 089	1775 089
	SY1 Front	★	---- ---	---- ---	1643 721
23-63-19	RETAINER, Window Belt Inner Weatherstrip				
	4 D., 4 D. Sub. Rear	2	2259 067		
23-63-20	WEATHERSTRIP, Quarter Window Belt Inner				
	Sp. Cl. Cp., SC1,SC2, except SD3				
	Right	1	2241 784	2167 292	2085 482
	Left	1	2241 784	2167 293	2085 482
	Sp. Cl. Cp., Cv. Cp., SY1	2	---- ---	---- ---	1772 798
	Cv. Cp., SC1,SC2, except SD3	1	---- ---	2167 292-3	2292 597
	Cv. Cp., SD3	2	---- ---	2292 597	
	Cl. Sed. Right	1	2195 273	2241 780	
	Left	1	2195 273	2241 781	
23-63-21	WEATHERSTRIP, Quarter Window Belt Outer				
	Sp. Cl. Cp., SC1,SC2, except SD3	1	2195 440-1	2254 996-7	2093 546-7
	Sp. Cl. Cp., SD3	1	---- ---	2093 546-7	
	Cv. Cp., SP2,SD2,SC1,SC2	1	---- ---	2254 996-7	2166 572-3
	Cv. Cp., SD3	1	---- ---	2166 572-3	
	Sp. Cl. Cp., Cv. Cp., SY1	1	---- ---	---- ---	2094 648-9
	Cl. Sed. w/CLIPS	2	2195 401		
	w/o Clips	2	2195 272		
	Cl. Sed.	1	---- ---	2254 996-7	
23-63-22	CLIP, Quarter Window Belt Outer Weatherstrip				
	Cl. Sed. Outer	★	2195 899		
23-63-33	WEATHERSTRIP and WEATHERCORD, Front Door				
	4 D., 4 D. Sub., except SD3				
	Blue	2	*2274 900	*2249 645	
	Green	2	*2274 901	*2249 646	
	Cocoa	2	*2274 902	*2249 647	
	Gray	2	*2274 903	*2249 648	
	Red, Right	1	*2274 904	*2274 899	
	Left	1	2274 904	2249 667	
	Sp. 4 D., SP2H, SD2H, Blue	2	---- ---	2249 673	
	Green	2	---- ---	2249 674	
	Cocoa	2	---- ---	2249 675	
	Gray	2	---- ---	2249 676	
	Red	2	---- ---	2249 677	
	Sp. Cl. Cp., Cl. Sed.				
	Blue	2	2249 645		
	Green	2	2249 646		
	Cocoa	2	2249 647		
	Gray	2	2249 648		
	Red	2	2274 899		
	Sp. Cl. Cp., SP1,SP2,SD1,SD2				
	Medium, Blue	2	---- ---	2249 668	
	Green	2	---- ---	2249 669	
	Cocoa	2	---- ---	2249 670	
	Gray	2	---- ---	2249 671	
	Dark Blue	2	---- ---	2249 762	
	Cordovan	2	---- ---	2249 763	
	Red	2	---- ---	2274 899	
	Black	2	---- ---	2297 198	

★ Indicates use as required.
⊟ Indicates parts not listed in any previous parts book.

Printed in U.S.A.
Prices and specifications subject to change without notice.

Right and left part numbers are on same line, first number is right, second number is left.
* Indicates change or addition.

MyMopar.com

CODE	PART NAME AND DESCRIPTION	PER CAR	VALIANT LANCER	PLYMOUTH DODGE	CHRYSLER IMPERIAL
23-63-0	**WEATHERSTRIP - Cont'd**				
23-63-33	WEATHERSTRIP and WEATHERCORD - Cont'd				
	Cv. Cp., SP2, SD2 Medium, Blue	1	---- ---	2249 746-7	
	Green	1	---- ---	2249 748-9	
	Cocoa	1	---- ---	2249 750-1	
	Gray	1	---- ---	2249 752-3	
	Red	1	---- ---	2249 754-5	
	Dark Blue	1	---- ---	2249 756-7	
	Cordovan	1	---- ---	2249 758-9	
	Black	1	---- ---	2249 760-1	
	Cl. Sed., SP1, SP2, SD1, SD2				
	Blue	2	---- ---	2249 645	
	Green	2	---- ---	2249 646	
	Cocoa	2	---- ---	2249 647	
	Gray	2	---- ---	2249 648	
	Red	2	---- ---	2274 899	
	Cl. Sed., SP1M, SP2M				
	Red	1	---- ---	2249 884-5	
	WEATHERSTRIP and WEATHERCORD, Rear Door				
	Sp. 4 D., SP2H, SD2H, Blue	2	---- ---	2249 673	
	Green	2	---- ---	2249 674	
	Cocoa	2	---- ---	2249 675	
	Gray	2	---- ---	2249 676	
	Red	2	---- ---	2249 677	
	4 D., 4 D. Sub., except SD3				
	Blue	2	2249 645	2249 668	
	Green	2	2249 646	2249 669	
	Cocoa	2	2249 647	2249 670	
	Gray	2	2249 648	2249 671	
	Red	2	2274 899	2249 672	
	WEATHERSTRIP, Door				
	4 D., SD3 Front	2	---- ---	1883 504	1883 504
	Rear, Right	1	---- ---	⊟2218 305	⊟2218 305
	Left	1	---- ---	*1883 520	*1883 520
	Sp. 4 D., Sp. 4 D. Sub., SD3, SC1, SC2, SC3				
	Front	1	---- ---	2165 304-5	2165 304-5
	Rear	1	---- ---	2165 488-9	2165 488-9
	Sp. 4 D., except SD3, On Center Pillar	1	---- ---	2254 706-7	
	Sp. Cl. Cp., Cv. Cp., SD3, SC1, SC2	1	---- ---	1952 852-3	1952 852-3
	Sp. 4 D., SY1 Hinge Pillar, Front	1	---- ---	---- ---	1810 704-5
	Lock Pillar, Front	1	---- ---	---- ---	1751 620-1
	Bottom, Front	1	---- ---	---- ---	1751 742-3
	Hinge Pillar, Rear	1	---- ---	---- ---	2094 960-1
	Lock Pillar, Rear	1	---- ---	---- ---	1751 654-5
	Bottom, Rear	1	---- ---	---- ---	1751 774-5
	Lock Pillar to Lock Pillar Angle	2	---- ---	---- ---	1690 874
	Sp. Cl. Cp., SY1 Hinge Pillar	1	---- ---	---- ---	1810 704-5
	Sp. Cl. Cp., Cv. Cp., SY1				
	Lock Pillar	1	---- ---	---- ---	1751 646-7
	Bottom	1	---- ---	---- ---	1751 744-5
	Cv. Cp., SY1 Hinge Pillar	1	---- ---	---- ---	1810 706-7
	WEATHERSTRIP, Front Door Hinge Pillar Auxiliary				
	Sp. 4 D., Sp. Cl. Cp., Cv. Cp., SY1	1	---- ---	---- ---	1751 570-1
	WEATHERSTRIP, Roof Side Rail				
	Sp. 4 D., SY1, except SD3	1	---- ---	2254 384-5	2188 688-9
	Sp. 4 D., Sp. 4 D. Sub., Sp. Cl. Cp., SD3, SC1, SC2, SC3	1	---- ---	2094 484-5	2094 484-5
	Sp. Cl. Cp., SY1, except SD3	1	2242 714-5	2254 382-3	2093 630-1
	WEATHERSTRIP, Door Vent Wing Frame Front Corner				
	Cv. Cp., SP2, SD2, SC1, SC2	1	---- ---	2189 918-9	1954 718-9
	Cv. Cp., SD3	1	---- ---	1954 718-9	
	WEATHERSTRIP, Quarter Outside Panel Lock Face Belt				
	Sp. Cl. Cp.	1	2259 054-5		

★ Indicates use as required.
⊟ Indicates parts not listed in any previous parts book.
Right and left part numbers are on same line, first number is right, second number is left.
* Indicates change or addition.

Printed in U.S.A.
Prices and specifications subject to change without notice.
March 8, 1963 Supersedes May 1, 1962.

MyMopar.com

CODE	PART NAME AND DESCRIPTION	PER CAR	VALIANT LANCER	PLYMOUTH DODGE	CHRYSLER IMPERIAL
23-63-0	**WEATHERSTRIP - Cont'd**				
23-63-33	WEATHERSTRIP, Rear Door Upper Hinge Side				
	Sp. 4 D., Sp. 4 D. Sub., SD3, SC1, SC2, SC3	1	---- ---	2165 484-5	2165 484-5
	SEAL, Rear Door Rear Upper Corner Lock Side				
	Sp. 4 D., except SD3	1	---- ---	2254 124-5	
	SEAL, Body Lock Pillar Belt to Door				
	Sp. Cl. Cp., Cv. Cp., SC1, SC2, except SD3	1	---- ---	2167 198-9	1954 618-9
	Sp. Cl. Cp., Cv. Cp., SD3	1	---- ---	1954 618-9	
	SEAL, Quarter Window Opening Weatherstrip				
	4 D., Sp. Cl. Cp., Cl. Sed.	2	2082 456		
	4 D. Sub. Front	2	2082 456		
	SEAL, Front Door Opening Upper Rear Corner				
	4 D., 4 D. Sub., except SD3	2	2082 973	2082 973	
	Cl. Sed.	2	2082 974	2082 973	
	SEAL, Rear Door Opening Upper Corner				
	4 D., 4 D. Sub., except SD3	4	2082 974	2082 974	
23-63-37	SEAL, Roof Rail Weatherstrip Retainer to Roof Rail				
	Sp. 4 D., Sp. Cl. Cp., SY1, except SD3	2	---- ---	2254 766	2189 860
	SD3, SC1, SC2, SC3, Sp. Cl. Cp.	2	---- ---	⊟2424 674	⊟2424 675
	SD3, SC1, SC2, SC3, Sp. 4 D., Sub.	2	---- ---	⊟2424 675	⊟2424 675
	SEAL, Roof Rear Rail to Rear Upper Pillar to Tailgate Glass Run Channel				
	Sub., except SD3	2	---- ---	2254 767	
23-63-55	RETAINER, Roof Side Rail Weatherstrip				
	Sp. 4 D., SY1, except SD3	1	---- ---	2167 216-7	2252 330-1
	Sp. 4 D., Sub., SD3, SC1, SC2, SC3				
	PKG.	1	---- ---	2196 671-2	2196 671-2
	SCREW	32	---- ---	---- ---	125 978
	Sp. Cl. Cp., except SD3	1	2195 410-1	2167 226-7	
	Sp. Cl. Cp., SD3, SC1, SC2				
	PKG., Right	1	---- ---	2196 669	2196 669
	Left	1	---- ---	2196 670	2196 670
	SCREW	24	---- ---	125 978	125 978
23-63-58	CAP, Roof Side Rail Weatherstrip Retainer				
	Sp. 4 D., Sp. Cl. Cp., except SD3	1	---- ---	2252 608-9	
23-63-94	WEATHERSTRIP, Rear Door Window Glass Front Frame				
	Sp. 4 D., SY1, except SD3	1	---- ---	2166 964-5	1810 016-7
	Sp. 4 D., Sub., SD3, SC1, SC2, SC3	1	---- ---	1954 544-5	1954 544-5
23-63-100	WEATHERSTRIP, Quarter Window Glass				
	4 D.	1	2243 264-5		
	Sub., except SD3	1	---- ---	2251 320-1	2259 417-8
	Sub., SD3	1	---- ---	2259 417-8	
	Sub. Front	1	2243 266-7		
	Rear	1	2083 162-3		
	Sp. Cl. Cp. Stationary	1	2195 968-9		
	Cl. Sed. Stationary	1	2195 308-9		
23-63-104	WEATHERSTRIP, Quarter Window Glass Front Frame				
	Sp. Cl. Cp., Cv. Cp., SC1, SC2, except SD3	1	2242 706-7	2166 964-5	1954 544-5
	Sp. Cl. Cp., Cv. Cp., SY1, SD3	1	---- ---	1954 544-5	1751 610-1
23-63-106	WEATHERSTRIP, Quarter Window Opening Upper Frame				
	Cl. Sed.	2	2195 764		
	SEAL, Quarter Window Opening Frame to Body				
	Cl. Sed.	2	2254 782		
	SEAL, Quarter Window Opening Upper Frame to Drain Trough				
	Cl. Sed., V1H, L1H	2	2422 451		

★ Indicates use as required.
⊟ Indicates parts not listed in any previous parts book.
March 8, 1963 Supersedes May 1, 1962.

Printed in U.S.A.
Prices and specifications subject to change without notice.
Right and left part numbers are on same line, first number is right, second number is left.
* Indicates change or addition.

MyMopar.com

CODE	PART NAME AND DESCRIPTION	PER CAR	VALIANT LANCER	PLYMOUTH DODGE	CHRYSLER IMPERIAL
23-63-0	**WEATHERSTRIP - Cont'd**				
23-63-110	LOCKINGSTRIP, Quarter Window Glass Weatherstrip				
	4 D. Mylar	1	2243 272-3		
	4 D. Sub., except SD3				
	Rubber	2	---- ---	2255 027	
	Mylar	2	---- ---	2422 471	
	4 D. Sub. Front, Mylar	1	2243 268-9		
	Rear, Mylar	2	2243 513		
23-63-112	WEATHERSTRIP, Rear Window Glass				
	4 D., SC1,SC2,SC3, except SD3	1	2082 275	2216 315	1963 684
	Sp. 4 D., SC1,SC2, except SD3	1	---- ---	2216 315	1963 684
	4 D., Sp. 4 D., SD3	1	---- ---	1963 684	
	Sp. 4 D., SC1,SC2,SC3 w/High Window	1	---- ---	---- ---	1952 661
	Sp. 4 D., SY1L, SY1M	1	---- ---	---- ---	2189 909
	Sp. 4 D., SY1H	1	---- ---	---- ---	1961 509
	Sp. Cl. Cp., SC1,SC2, except SD3	1	2082 275	2216 315	2093 652
	Sp. Cl. Cp., SD3,SY1	1	---- ---	2093 652	2093 399
	Cl. Sed.	1	2082 275	2216 315	
23-63-114	LOCKINGSTRIP, Rear Window Glass Weatherstrip				
	NOTE: See Exterior Moulding Illustrations in Front of Group 23 - Body.				
23-63-126	WEATHERSTRIP, Door Vent Wing				
	Sp. 4 D., Sp. 4 D. Sub., Sp. Cl. Cp., Cv. Cp., SC1,SC2,SC3, except SD3	1	2195 700-1	2254 586-7	1950 592-3
	Sp. 4 D., Sp. 4 D. Sub., Sp. Cl. Cp., Cv. Cp., SD3	1	---- ---	1950 592-3	
	Sp. 4 D., Sp. Cl. Cp., Cv. Cp., SY1	1	---- ---	---- ---	2094 334-5
	4 D., 4 D. Sub., Cl. Sed., except SD3	1	2081 356-7	2167 680-1	1950 594-5
	4 D., SD3	1	---- ---	1950 594-5	
	WEATHERSTRIP, Door Vent Wing Auxiliary, except SD3	2	---- ---	⊟2217 908	
23-63-127	RETAINER and DIVISIONAL CHANNEL, Door Vent Wing Weatherstrip				
	4 D., 4 D. Sub., Cl. Sed., except SD3	1	2259 344-5	2167 340-1	2254 474-5
	4 D., SD3	1	---- ---	2254 474-5	
	RETAINER, Door Vent Wing Weatherstrip				
	Sp. 4 D., Sp. Cl. Cp., Cv. Cp., except SD3				
	Upper, Right	1	2195 689	2216 240	
	Left	1	2195 689	2216 241	
	NOTE: Also see Part Type Code 23-64-48.				
23-63-171	WEATHERSTRIP, Tailgate Opening Lower				
	Sub., except SD3	1	2259 383	2251 458	2189 350
	Sub., SD3	1	---- ---	2189 350	
23-63-172	WEATHERSTRIP, Deck Lid Opening				
	Except Sub., SP1,SP2,SC1,SC2,SC3	1	2081 503	2216 418	2252 396
	Except Sub., SD1,SD2,SY1	1	---- ---	2216 419	⊟2252 396
	Except Sub., SD3	1	---- ---	2252 396	
23-63-173	RETAINER, Deck Lid Opening Lower Panel				
	Except Sub., SD3, SC1, SC2, SC3	1	---- ---	1964 506	1964 506
23-63-181	WEATHERSTRIP, Tailgate Glass				
	Sub., except SD3 Inner	1	2251 452	2251 452	1878 650
	Outer, w/Bonded Type Glass	1	*2252 604	*2252 604	*1878 204
	Outer, w/Riveted Type Glass	1	---- ---	⊟2217 518	
	Sub., SD3 Inner	1	---- ---	1878 650	
	Outer	1	---- ---	1878 204	

★ Indicates use as required.
⊟ Indicates parts not listed in any previous parts book.
Right and left part numbers are on same line, first number is right, second number is left.
* Indicates change or addition.

Printed in U.S.A.
Prices and specifications subject to change without notice.
March 8, 1963 Supersedes May 1, 1962.

MyMopar.com

23-64-0 WINDOW AND VENT WING

NOTE 1: PLACE ORDERS DIRECT WITH EITHER:
A. YOUR USUAL SOURCE OF SUPPLY FOR MOPAR PARTS
B. CHRYSLER "SAFEGUARD" DISTRIBUTOR
C. CENTER LINE PARTS PLANT
NOTE 2: PLACE ORDERS DIRECT WITH YOUR CHRYSLER "SAFEGUARD" DISTRIBUTOR
NOTE 3: PLACE ORDERS DIRECT WITH YOUR LOCAL GLASS SOURCE

CODE	PART NAME AND DESCRIPTION	PER CAR	VALIANT LANCER	PLYMOUTH DODGE	CHRYSLER IMPERIAL
23-64-4	BUMPER, Door and Quarter Window Down Position Stop				
	SC1, SC2, SC3 w/Electric Window Lift	★	---- ---	1954 083	1954 083
	BUMPER, Window Glass Lower Channel Stop Bracket				
	SY1 Rear and Quarter	★	---- ---	---- ---	1680 109
	SY1 Front	2	---- ---	---- ---	1381 435
	BUMPER, Quarter Window Regulator Guide Arm Plate Stop				
	SY1	2	---- ---	---- ---	985 563
23-64-10	GLASS, w/Lower CHANNEL, Tailgate Window (see Note 1)				
	Except SD3 Clear	1	*2082 395	⊟2217 509	
	Tinted	1	*2082 396	⊟2217 510	
	SD3 Clear	1	---- ---	*2189 346	*2189 346
	Tinted	1	---- ---	*2189 347	*2189 347
	NOTE: For Tailgate Glass Lower Channel See Part Type Code 23-09-64				
23-64-12	STOP, Door and Quarter Window Up Position				
	SC1, SC2, SC3	★	1909 529	1909 529	1909 529
	STOP, Rear Door Window Up Position				
	Sp. 4 D., Sp. 4 D. Sub., SD3, SC1, SC2, SC3	2	---- ---	1909 530	1909 530
	STOP, Quarter Window Up Position				
	Sp. Cl. Cp., SD3, SC1, SC2				
	Front	2	---- ---	1963 222	1963 222
	Rear	2	---- ---	1909 530	1909 530
	BRACKET, Door and Quarter Window Glass Down Position Stop				
	SC1, SC2, SC3 w/Electric Window Lifts . . .	★	---- ---	1963 393	1963 393
	SUPPORT, Electric Window Lift Down Position Stop Bracket, except SD3				
	Front	1	---- ---	2254 042-3	
	SC1, SC2, SC3, except SD3				
	Rear	2	---- ---	2254 030	1963 392
	SD3 Rear	2	---- ---	1963 392	
	Sp. Cl. Cp., SC1, SC2, except SD3				
	Quarter	2	---- ---	2216 296	1963 428
	Sp. Cl. Cp., Cv. Cp., SD3				
	Quarter	2	---- ---	1963 428	
	Cv. Cp., SP2, SD2 Quarter	2	---- ---	2216 296	
	BRACKET, Door Glass Down Position Stop				
	SY1 Front	2	---- ---	---- ---	1475 487
	BRACKET, Door Window Lower Stop				
	SY1 Rear	2	---- ---	---- ---	1750 606
	BRACKET, Quarter Window Stop Support Lower				
	SY1	2	---- ---	---- ---	1750 806
	SUPPORT, Quarter Window Lower Stop				
	SY1	2	---- ---	---- ---	1750 537
	STOP, Door Window Up Position, on Door				
	SY1 Front	2	---- ---	---- ---	1750 609
	STOP, Door Window Up Position, on Rear Track				
	SY1 Rear	1	---- ---	---- ---	1751 692-3
	STOP, Door Window Up Position on Door				
	SY1 Rear	1	---- ---	---- ---	1751 698-9
	SUPPORT, Quarter Window Up Position Stop Bumper, on Glass Lower Channel				
	SY1 Front	1	---- ---	---- ---	1750 658-9
	Rear	1	---- ---	---- ---	1691 104-5

★ Indicates use as required.
⊟ Indicates parts not listed in any previous parts book.
March 8, 1963 Supersedes May 1, 1962.

Printed in U.S.A.
Prices and specifications subject to change without notice.
Right and left part numbers are on same line, first number is right, second number is left.
* Indicates change or addition.

MyMopar.com

CODE	PART NAME AND DESCRIPTION	PER CAR	VALIANT LANCER	PLYMOUTH DODGE	CHRYSLER IMPERIAL
23-64-0	**WINDOW AND VENT WING - Cont'd**				
23-64-34	RIVET, Front Door Vent Wing Divisional Channel to Frame or Bracket, SD3	★	---- ---	*6000 157	*6000 157
	RIVET, Quarter Window Frame to Weatherstrip Retainer				
	SD3, SY1 Upper	★	---- ---	*6000 174	*6000 174
	SD3 Lower	★	---- ---	*6000 174	*6000 143
23-64-41	STUD, Door Vent Wing Adjusting				
	SC1, SC2, SC3, except SD3	★	*1950 830	*1883 554	*1950 830
	SD3	★	---- ---	*1950 830	
23-64-46	NUT, Door Vent Wing Frame Lower Corner Cap Self Thread				
	Sp. 4 D., Sp. 4 D Sub., Sp. Cl. Cp., Cv. Cp., SD3, SC1, SC2, SC3	2	---- ---	*2165 703	*2165 703
23-64-47	CAP, Door Vent Wing Lower Corner				
	Sp. 4 D., Sp. 4 D. Sub., Sp. Cl. Cp., Cv. Cp., SD3, SC1, SC2, SC3	1	---- ---	*2165 996-7	*2165 996-7
23-64-48	FRAME and DIVISIONAL CHANNEL, Door Vent Wing				
	SY1 w/o Power Vent	1	---- ---	---- ---	1960 948-9
	w/Power Vent	1	---- ---	---- ---	2093 942-3
	Sp. 4 D., Sp. 4 D. Sub., Sp. Cl. Cp., Cv. Cp., SD3	1	---- ---	*2254 484-5	
	Sp. 4 D., Sp. 4 D. Sub., Sp. Cl. Cp., SC1, SC2, SC3, Except SD3	1	---- ---	*2254 028-9	*2254 484-5
	Cv. Cp., SC1, SC2, except SD3	1	---- ---	*2189 936-7	*2254 484-5
	DIVISIONAL CHANNEL and MOULDING, Door Vent Wing				
	Sp. 4 D., Sp. 4 D. Sub., Sp. Cl. Cp., Cv. Cp., SD3	2	---- ---	*2254 627	
	Sp. 4 D., Sp. 4 D. Sub., Sp. Cl. Cp., Cv. Cp., SC1, SC2, SC3, except SD3	2	---- ---	*2252 602	*2254 627
	4 D., 4 D. Sub., Cl.Sed., except SD3	2	---- ---	*2252 603	
23-64-48	FRAME and RETAINER, Door Vent Wing Weatherstrip Lower				
	Sp. Cl. Cp.	1	2216 518-9		
	NOTE: Also see Part Type Code 23-63-127.				
23-64-49	FRAME, Door Vent Wing				
	Sp. Cl. Cp.	1	2195 694-5		
23-64-60	RIVET, Door Vent Wing Frame to Lower Retainer				
	Sp. 4 D., Sp. 4 D. Sub., Sp. Cl. Cp., Cv. Cp., SD3, SC1, SC2, SC3	2	---- ---	*1578 269	*1578 269
23-64-62	PLATE, Door Vent Wing Glass Outer Lower Attaching				
	4 D., Sp. 4 D., Sub., Sp. Cl. Cp., Cl. Sed., except SD3	1	---- ---	*2216 210-1	
23-64-66	FRAME, Rear Window Opening Upper				
	4 D., Sp. 4 D., Sp. Cl. Cp., Cl. Sed., except SD3	1	*2081 227	*2166 281	
	4 D., Sp. 4 D., SD3, SC1, SC2, SC3 w/Low Window	1	---- ---	*1909 322	*1909 322
	Sp. 4 D., SC1, SC2, SC3 w/High Window	1	---- ---	---- ---	1963 229
	Sp. Cl. Cp., SD3, SC1, SC2	1	---- ---	*1909 323	*1909 323
	Sp. 4 D., SY1	1	---- ---	---- ---	1877 358
	Sp. Cl. Cp., SY1	1	---- ---	---- ---	1877 359
	Sp. 4 D., SY1H End	1	---- ---	---- ---	2189 372-3
	Center	1	---- ---	---- ---	2189 374

★ Indicates use as required.
⊟ Indicates parts not listed in any previous parts book.
Right and left part numbers are on same line, first number is right, second number is left.
* Indicates change or addition.

Printed in U.S.A.
Prices and specifications subject to change without notice.
May 1, 1962 .

MyMopar.com

CODE	PART NAME AND DESCRIPTION	PER CAR	VALIANT LANCER	PLYMOUTH DODGE	CHRYSLER IMPERIAL
23-64-0	**WINDOW AND VENT WING - Cont'd**				
23-64-66	FRAME, Rear Window Opening Side				
	4 D., Sp. 4 D., SD3, SC1, SC2, SC3 w/Low Window	1	---- ---	*1882 020-1	*1882 020-1
	Sp. 4 D., SC1, SC2, SC3 w/High Window	1	---- ---	---- ---	1952 878-9
	Sp. Cl. Cp., SD3, SC1, SC2	1	---- ---	*1861 142-3	*1861 142-3
	Sp. 4 D., SY1L, SY1M	1	---- ---	---- ---	1877 360-1
	Sp. Cl. Cp., SY1L, SY1M	1	---- ---	---- ---	1877 362-3
	Sp. 4 D., SY1H	1	---- ---	---- ---	2189 370-1
	FRAME, Rear Window Opening Lower, Except Sub. and Cv. Cp., except SD3	1	*2081 226	*2166 284	
	Sp. 4 D., SY1H	1	---- ---	---- ---	1961 513
	4 D., Sp. 4 D., SD3, SC1, SC2, SC3 End	1	---- ---	*1954 668-9	*1954 668-9
	4 D., Sp. Cl. Cp., Cl. Sed. End	1	2081 248-9		
23-64-67	REINFORCEMENT, Rear Window Upper Frame				
	Sp. 4 D., SY1	1	---- ---	---- ---	1877 364-5
	Sp. Cl. Cp., SY1	1	---- ---	---- ---	1877 390-1
23-64-71	BUMPER or PLUG, Door Glass Upper Corner, on Divisional Channel				
	Sp. 4 D., Sp. 4 D. Sub., Sp. Cl. Cp., Cv. Cp., SC1, SC2, SC3, except SD3	1	*2242 716-7	*2167 326-7	*1964 228-9
	Sp. 4 D., Sp. 4 D. Sub., Sp. Cl. Cp., Cv. Cp., SD3	1	---- ---	*1964 228-9	
	Sp. 4 D., Sp. Cl. Cp., Cv. Cp., SY1	2	---- ---	---- ---	2093 809
23-64-74	SEAL, Door Vent Wing to Door Inner Panel				
	Sp. 4 D., Sp. 4 D. Sub., Sp. Cl. Cp., Cv. Cp., SD3, SC1, SC2, SC3	2	---- ---	*2165 519	*2165 519
23-64-75	MOTOR and TRANSMISSION, Electric Vent Wing SY1	1	---- ---	---- ---	2093 030-1
23-64-76	BRACKET, Electric Vent Wing Motor Mounting SY1	1	---- ---	---- ---	1961 802-3
23-64-78	DRIVE SHAFT, GEAR and RETAINER, Electric Vent Wing SY1	1	---- ---	---- ---	2093 048-9
23-64-79	COUPLING, Electric Vent Wing Shaft to Pivot SY1	2	---- ---	---- ---	1961 977
23-64-83	SHIM, Electric Vent Wing Motor Mounting Bracket to Door SY1	2	---- ---	---- ---	6006 512
23-64-174	GLASS and FRAME, Quarter Window (see Note 1)				
	Sp. Cl. Cp., SC1, SC2, except SD3 Clear	1	*2242 712-3	*2216 382-3	*1961 782-3
	Solex	1	2242 932-3	2216 380-1	1961 784-5
	Cv. Cp., SC1, SC2, except SD3 Clear	1	---- ---	*2189 716-7	*1909 682-3
	Solex	1	---- ---	2189 718-9	1909 684-5
	Sp. Cl. Cp., SD3 Clear	1	---- ---	*1961 782-3	
	Solex	1	---- ---	*1961 784-5	
	Cv. Cp., SD3 Clear	1	---- ---	*1909 682-3	
	Solex	1	---- ---	*1909 684-5	

NOTE: For Models not listed see Part Type Code 23-64-311.

★ Indicates use as required.
⊟ Indicates parts not listed in any previous parts book.

Printed in U.S.A.
Prices and specifications subject to change without notice.
Right and left part numbers are on same line, first number is right, second number is left.
* Indicates change or addition.

MyMopar.com

CODE	PART NAME AND DESCRIPTION	PER CAR	VALIANT LANCER	PLYMOUTH DODGE	CHRYSLER IMPERIAL
23-64-0	**WINDOW AND VENT WING - Cont'd**				
23-64-197	GUIDE, Quarter Window Glass Lower Frame Stabilizer				
	Sp. Cl. Cp., SD3, SC1, SC2	4	---- ---	*1961 681	*1961 681
23-64-198	CHANNEL, Quarter Window Glass Lower Frame Stabilizer				
	Sp. Cl. Cp., SD3, SC1, SC2	1	---- ---	*2252 136-7	*2252 136-7
23-64-237	CLAMP, Door Vent Wing Upper Pivot to Glass				
	SC1, SC2, SC3	2	1708 998	1708 998	1708 998
	PLATE, Door Vent Wing Upper Pivot to Glass Base Anchor				
	SY1	2	---- ---	---- ---	1755 366
23-64-240	PIVOT, Door Vent Wing Upper				
	4 D., 4 D. Sub., Cl. Sed., except SD3	1	*2259 312-3	*2167 472-3	
	Sp. 4 D., Sp. Cl. Cp., Cv. Cp., except SD3	1	---- ---	*2167 472-3	
	PIVOT PACKAGE, Door Vent Wing Upper				
	4 D., SD3, SC1, SC2, SC3	1	---- ---	*2216 344-5	*2216 344-5
	SCREW	2	---- ---	---- ---	125 978
23-64-242	BRACKET, Door Vent Wing Upper Pivot				
	SC1, SC2, SC3, except SD3	1	*2081 648-9	*2167 310-1	*1950 292-3
	SD3, SY1	1	---- ---	*1950 292-3	*2094 464-5
	BRACKET and PIVOT, Door Vent Wing Upper				
	Sp. 4 D., Sp. 4 D. Sub., Sp. Cl. Cp., Cv. Cp., SD3, SC1, SC2, SC3	1	*2195 998-9	*2166 680-1	*2166 680-1
	Sp. 4 D., Sp. Cl. Cp., Cv. Cp., SY1	1	---- ---	---- ---	2094 462-3
	BRACKET, Door Vent Wing Lower Pivot and Handle Shaft Inner, except SD3	1	---- ---	*2167 628-9	
	CLAMP, Door Vent Wing Lower Pivot Tension				
	SC1, SC2, SC3, except SD3				
	Right	1	*2081 379	*2167 364	*1776 504
	Left	1	2081 379	2167 365	1776 505
	SD3	1	---- ---	*1776 504-5	
23-64-243	SEAL, Door Vent Wing Lower Bracket to Glass				
	Except SD3 Inner	2	---- ---	⊟2216 220	
	Outer	2	---- ---	⊟2216 221	
23-64-246	SHIM, Door Vent Wing Frame to Door				
	SY1	★	---- ---	---- ---	1349 190
	SPACER, Door Vent Wing Upper Pivot Front				
	2 D. Sed., 4 D. Sed., Sub., except SD3	2	---- ---	⊟2216 208	
23-64-247	SCREW, Door Vent Wing Upper Pivot Clamp to Bracket	2	6000 374	6000 374	6000 374
	SCREW, Door Vent Wing Lower Pivot Tension Clamp	2	6006 244	6003 244	6006 244
23-64-248	COVER, Front Door Trim Panel Vent Wing Pivot				
	Notch, except SD3 Blue	2	---- ---	*2249 683	
	Green	2	---- ---	2249 684	
	Cocoa	2	---- ---	2249 685	
	Gray	2	---- ---	2249 686	
	Red	2	---- ---	2249 687	
23-64-254	TRACK, Rear Door Window Roller				
	4 D., 4 D. Sub.	1	*2253 910-1	---- ---	⊟2253 914-5
	Sp. 4 D., Sp. 4 D. Sub., except SD3				
	Front	1	---- ---	*2253 208-9	⊟2253 918-9
	Rear	2	---- ---	2253 205	⊟2253 921
	4 D., SD3	1	---- ---	⊟2253 914-5	

★ Indicates use as required.
⊟ Indicates parts not listed in any previous parts book.
Right and left part numbers are on same line, first number is right, second number is left.
* Indicates change or addition.

Printed in U.S.A.
Prices and specifications subject to change without notice.
May 1, 1962.

MyMopar.com

CODE	PART NAME AND DESCRIPTION	PER CAR	VALIANT LANCER	PLYMOUTH DODGE	CHRYSLER IMPERIAL
23-64-0	**WINDOW AND VENT WING - Cont'd**				
23-64-254	TRACK - Cont'd				
	Sp. 4 D., Sp. 4 D. Sub., SD3				
	Front	1	---- ---	2253 918-9	
	Rear	2	---- ---	2253 921	
23-64-255	FRAME, Front Door Window Glass				
	Sp. 4 D., SY1	1	---- ---	---- ---	1750 534-5
	Sp. Cl. Cp., Cv. Cp., SY1	1	---- ---	---- ---	1751 092-3
	Cl. Sed.	1	2195 260-1		
	FRAME, Rear Door Window Glass				
	Sp. 4 D., SY1 Front and Top	1	---- ---	---- ---	1691 842-3
	Rear	1	---- ---	---- ---	1691 788-9
23-64-265	GLASS, FRAME and Lower CHANNEL, Front Door Window (see Note 1)				
	Sp. 4 D., Sp. 4 D. Sub., SD3				
	Clear	1	---- ---	1909 694-5	
	Tinted	1	---- ---	1909 696-7	
	Sp. Cl. Cp., SD3 Clear	1	---- ---	1909 710-1	
	Tinted	1	---- ---	1909 712-3	
	Cv. Cp., SD3 Clear	1	---- ---	1909 302-3	
	Tinted	1	---- ---	1909 304-5	
	Sp. 4 D., Sp. 4 D. Sub., SC1, SC2, SC3, except SD3				
	Clear	1	---- ---	2166 714-5	1909 694-5
	Tinted	1	---- ---	2166 716-7	1909 696-7
	Sp. Cl. Cp., SC1, SC2, except SD3				
	Clear	1	2242 922-3	2167 844-5	1909 710-1
	Tinted	1	2242 924-5	2167 846-7	1909 712-3
	Cv. Cp., SP2, SD2, SC1, SC2				
	Clear	1	---- ---	*2167 844-5	1909 302-3
	Tinted	1	---- ---	2167 846-7	1909 304-5
	Cl. Sed. Less Frame, Clear	1	2195 682-3		
	Tinted	1	2195 684-5		
	GLASS, FRAME and Lower CHANNEL, Rear Door Window (see Note 1)				
	Sp. 4 D., Sp. 4 D. Sub., SD3, SC1, SC2, SC3				
	Clear	1	---- ---	*1909 698-9	*1909 698-9
	Tinted	1	---- ---	*1909 700-1	*1909 700-1
	GLASS and Front FRAME, Rear Door Window (see Note 1)				
	Sp. 4 D., except SD3				
	Clear	1	---- ---	*2167 884-5	
	Tinted	1	---- ---	2167 886-7	
	NOTE: For Models not listed see Part Type Code 23-64-308.				
23-64-267	FILLER, Quarter Window Upper Front Corner Trim				
	4 D., Sub., 1.40" x 1.90" lgh.				
	Steel	1	*2292 218-9		
	1.60" x 2.65" w/Screw Hole	1	⊟2292 902-3		
23-64-269	BRACKET and ROLLER, Window Roller Track				
	Sp. 4 D. Rear	6	---- ---	2167 853	
	Sp. Cl. Cp., Cv. Cp. Quarter	6	---- ---	2167 853	
23-64-272	SPACER, Window Glass to Lower Frame, Rubber				
	Sp. 4 D., except SD3 Rear	4	---- ---	2167 856	
	Sp. Cl. Cp., Cv. Cp., except SD3				
	Quarter	4	---- ---	2167 856	
	Sub., except SD3 Tailgate	2	---- ---	2167 856	
	GROMMET, Window Glass to Lower Frame Rubber				
	Sp. 4 D., except SD3 Rear	4	---- ---	2167 857	
	Sp. Cl. Cp., Cv. Cp., except SD3				
	Quarter	4	---- ---	2167 857	

★ Indicates use as required.
⊟ Indicates parts not listed in any previous parts book.
March 8, 1963 Supersedes May 1, 1962.

Printed in U.S.A.
Prices and specifications subject to change without notice.
Right and left part numbers are on same line, first number is right, second number is left.
* Indicates change or addition.

MyMopar.com

CODE	PART NAME AND DESCRIPTION	PER CAR	VALIANT LANCER	PLYMOUTH DODGE	CHRYSLER IMPERIAL
23-64-0	**WINDOW AND VENT WING - Cont'd**				
23-64-273	SUPPORT, Door Vent Wing Divisional Channel to Inside Panel Lower				
	SC1,SC2,SC3, except SD3				
	Right	1	---- ---	2167 880	1909 856
	Left	1	---- ---	2167 881	1909 856
	SD3	2	---- ---	1909 856	
	Sp. Cl. Cp.	1	2195 864-5		
23-64-275	STUD, Window Roller Track Adjusting				
	SD3,SC1,SC2,SC3	★	1883 554	1883 554	1883 554
	STUD, Window Roller Track Lower Support Adjusting				
	Sp. 4 D., Sp. 4 D. Sub., SD3,SC1,SC2,SC3				
	Rear	★	---- ---	1954 674	1954 674
	Sp. Cl. Cp., Cv. Cp., SD3,SC1,SC2				
	Quarter	★	---- ---	1954 674	1954 674
	STUD, Window Roller Track Adjusting				
	SY1 Upper	★	---- ---	---- ---	6006 409
	Lower	★	---- ---	---- ---	6006 296
23-64-278	GROMMET, Door Vent Wing Upper Pivot Bracket to Glass				
	SC1, SC2, SC3	2	1909 917	1909 917	1909 917
	SY1	2	---- ---	---- ---	1751 492
23-64-279	WASHER or INSULATOR, Door Vent Wing Upper Pivot Bracket to Glass				
	SY1	2	---- ---	---- ---	1751 489
23-64-280	FRAME, Quarter Window Opening				
	Sp. 4 D. Sub., SD3, Front	1	---- ---	1960 066-7	1960 066-7
	Cl. Sed.	1	---- ---	2216 142-3	
	Cl. Sed. Chrome, Upper	1	2243 826-7		
	Cl. Sed. White, Upper	1	2195 306-7		
	Sp. Cl. Cp., Cv. Cp., SY1				
	Front	1	---- ---	---- ---	1751 890-1
	Upper & Rear	1	---- ---	---- ---	1691 616-7
23-64-281	REINFORCEMENT, Quarter Inside Panel Front Roller Track				
	Sp. Cl. Cp., Cv. Cp., except SD3	1	---- ---	⊟2255 224-5	
23-64-287	PLATE, Quarter Window Glass Lower Frame Mounting				
	Sp. Cl. Cp. w/ROLLERS	1	2195 744-5		
23-64-289	CLAMP and STUD, Window Glass to Lower Frame				
	Sp. 4 D., except SD3, Rear	4	---- ---	2167 855	
	Sp. Cl. Cp., Cv. Cp., except SD3				
	Quarter	4	---- ---	2167 855	
23-64-297	SLEEVE NUT, Window Roller Track and Support				
	Sp. 4 D., Sp. 4 D. Sub., SC1, SC2, SC3	★	---- ---	2216 371	2216 371
	4 D., 4 D. Sub., SC1, SC2, SC3	★	2216 371	---- ---	2216 371
	Sp. Cl. Cp.	★	---- ---	2216 371	
23-64-299	TRACK, Quarter Window Roller				
	Sp. Cl. Cp., SD3,SC1,SC2, w/o Studs, Right	1	---- ---	2252 128	2252 128
	Left	1	---- ---	2252 128	2252 128
	w/STUDS	1	2259 102-3		
	Sp. Cl. Cp., except SD3				
	w/STUDS, Front	1	---- ---	2253 206-7	
	Rear	2	---- ---	2253 205	
	Cv. Cp., SD3,SC1,SC2				
	w/o Studs, Front	1	---- ---	2253 926-7	2253 926-7
	Rear	1	---- ---	2252 138-9	2252 138-9

★ Indicates use as required.
⊟ Indicates parts not listed in any previous parts book.
Right and left part numbers are on same line, first number is right, second number is left.
* Indicates change or addition.

Printed in U.S.A.
Prices and specifications subject to change without notice.
March 8, 1963 Supersedes May 1, 1962.

MyMopar.com

CODE	PART NAME AND DESCRIPTION	PER CAR	VALIANT LANCER	PLYMOUTH DODGE	CHRYSLER IMPERIAL
23-64-0	**WINDOW AND VENT WING - Cont'd**				
23-64-299	TRACK - Cont'd				
	Cv. Cp., except SD3, w/STUDS, Front	1	---- ---	2253 206-7	2166 806-7
	Rear, Right	1	---- ---	2253 205	2166 808
	Left	1	---- ---	2253 205	2166 809
23-64-306	GLASS, w/Lower PIVOT and BRACKET, Door Vent Wing (see Note 1)				
	SY1 Clear	1	*2083 296-7	---- ---	*2094 518-9
	Tinted	1	2083 298-9	---- ---	2094 520-1
	w/Power Vent, Clear	1	---- ---	---- ---	2094 522-3
	Tinted	1	---- ---	---- ---	2094 524-5
	Sp. 4 D., Sp. 4 D. Sub., Sp. Cl. Cp., Cv. Cp., SD3, SC1, SC2, SC3 Clear	1	---- ---	1954 100-1	1954 100-1
	SD3 Tinted	1	---- ---	1954 102-3	1954 102-3
	4 D., SD3, SC1, SC2, SC3				
	Clear	1	---- ---	1954 104-5	1954 104-5
	Tinted	1	---- ---	1954 106-7	1954 106-7
	GLASS, Door Vent Wing (see Note 1)				
	Except SD3 Clear	2	---- ---	*2166 902	
23-64-308	GLASS, Front Door Window (see Note 1)				
	4 D., 4 D. Sub. Clear	2	*2081 370		
	Tinted	2	2081 355		
	GLASS, Rear Door Window (see Note 1)				
	4 D., 4 D. Sub., SD3 Clear	2	*2081 467	*1883 271	*1883 271
	Tinted	2	2081 547	1883 272	1883 272
	GLASS, Front Door Window (see Note 1)				
	4 D., 4 D. Sub., except SD3				
	Clear	2	---- ---	*2167 766	
	Tinted	2	---- ---	2167 767	
	Cl. Sed. Clear	2	---- ---	2166 888	
	Tinted	2	---- ---	2166 889	
	4 D., SD3 Clear	2	---- ---	1883 268	1883 268
	Tinted	2	---- ---	1883 269	1883 269
	GLASS, Front Door Window (see Note 3)				
	Sp. 4 D., SY1 Clear	1	---- ---	---- ---	*1691 156-7
	Tinted	1	---- ---	---- ---	*1691 196-7
	Sp. Cl. Cp., Cv. Cp., SY1				
	Clear	1	---- ---	---- ---	*1691 076-7
	Tinted	1	---- ---	---- ---	*1691 078-9
	GLASS, Rear Door Window (see Note 1)				
	4 D., 4 D. Sub., except SD3				
	Clear	2	---- ---	*2167 817	
	Tinted	2	---- ---	2167 818	
	GLASS, Rear Door Window (see Note 3)				
	Sp. 4 D., SY1 Clear	1	---- ---	---- ---	*1691 152-3
	Tinted	1	---- ---	---- ---	*1691 174-5
	NOTE: For Models not listed see Part Type Code 23-64-265.				
23-64-311	GLASS, Quarter Window (see Note 1)				
	4 D. Clear	2	*2081 198		
	Tinted	2	2081 555		
	4 D. Sub. Front, Clear	2	2259 419		
	Tinted	2	2259 420		
	Rear, Clear	1	2081 196-7		
	Tinted	1	2081 830-1		
	Sp. Cl. Cp., Cl. Sed. Stationary, Clear	2	2195 304		
	Tinted	2	2195 305		
	Cl. Sed. Drop, Clear	2	2243 388		
	Tinted	2	2243 389		

★ Indicates use as required.
§ Indicates parts not listed in any previous parts book.
March 8, 1963 Supersedes May 1, 1962.

Printed in U.S.A.
Prices and specifications subject to change without notice.
Right and left part numbers are on same line, first number is right, second number is left.
* Indicates change or addition.

MyMopar.com

CODE	PART NAME AND DESCRIPTION	PER CAR	VALIANT LANCER	PLYMOUTH DODGE	CHRYSLER IMPERIAL
23-64-0 WINDOW ANDVENT WING - Cont'd					
23-64-311	GLASS, Quarter Window (see Note 1)				
	Sub., except SD3 Clear	1	---- ---	*2251 220-1	
	Tinted	1	---- ---	2251 222-3	
	Cl. Sed., except SD3, Clear	2	---- ---	2167 152	
	Tinted	2	---- ---	2167 153	
	Sp. 4 D. Sub., SD3, SC1, SC3, Stationary,				
	Clear	1	---- ---	1878 180-1	1878 180-1
	Tinted	1	---- ---	1878 184-5	1878 184-5
	Glass, Quarter Window (see Note 3)				
	Sp. Cl. Cp., Cv. Cp., SY1				
	Clear	1	---- ---	---- ---	*1691 238-9
	Tinted	1	---- ---	---- ---	*1691 240-1
	NOTE: For Models not listed see Part Type Code 23-64-174.				
23-64-314	GLASS, Rear Window (see Note 2)				
	4 D., Sp. 4 D., Sp. Cl. Cp., Cl. Sed.				
	Clear	1	2081 257	2166 288	
	Tinted	1	2081 533	2166 289	
	4 D., Sp. 4 D., SD3, SC1, SC2, SC3				
	w/Low Window, Clear	1	---- ---	1869 630	1869 630
	Tinted	1	---- ---	1954 217	1954 217
	Sp. 4 D., SC1, SC2, SC3				
	w/High Window, Clear	1	---- ---	---- ---	2165 515
	Tinted	1	---- ---	---- ---	1952 643
	Sp. Cl. Cp., SC1, SC2 Clear	1	---- ---	---- ---	*1877 958
	Tinted	1	---- ---	---- ---	*1878 161
	GLASS, Rear Window (see Note 3)				
	Sp. 4 D., SY1L, SY1M				
	Clear	1	---- ---	---- ---	*1877 316
	Tinted	1	---- ---	---- ---	*1877 325
	Sp. 4 D., SY1H Clear	1	---- ---	---- ---	*1961 508
	Tinted	1	---- ---	---- ---	*1961 646
	Sp. Cl. Cp., SY1L, SY1M				
	Clear	1	---- ---	---- ---	*1877 317
	Tinted	1	---- ---	---- ---	*1877 324

23-66-0 WINDSHIELD

NOTE 2: PLACE ORDERS DIRECT WITH YOUR CHRYSLER "SAFEGUARD" DISTRIBUTOR.

NOTE 3: PLACE ORDERS DIRECT WITH YOUR LOCAL GLASS SOURCE.

23-66-65	FRAME, Windshield Opening Side	1	2081 838-9		
	FRAME and Tapping PLATE, Windshield Upper				
	except Cv. Cp.	1	---- ---	*2253 156-7	
	Cv. Cp., SP2, SD2	1	---- ---	2253 539	
23-66-77	REINFORCEMENT, Windshield Opening Upper Frame				
	Sp. 4 D., Sp. Cl. Cp., SY1	1	---- ---	---- ---	2217 261
23-66-135	GLASS, Windshield (see Note 2)				
	Except SD3 Clear	1	*2081 117	*2166 114	
	Tinted	1	2217 285	2167 733	
	Except Cv. Cp., SD3, SC1, SC2, SC3				
	Clear	1	---- ---	2165 418	2165 418
	Tinted	1	---- ---	2165 419	2165 419
	Cv. Cp., SD3, SC1, SC2				
	Clear	1	---- ---	1869 627	1869 627
	Tinted	1	---- ---	1954 216	1954 216
	GLASS, Windshield (see Note 3)				
	SY1 Clear	1	---- ---	---- ---	*1651 431
	Tinted	1	---- ---	---- ---	*1690 871

★ Indicates use as required.
⊟ Indicates parts not listed in any previous parts book.
Right and left part numbers are on same line, first number is right, second number is left.
* Indicates change or addition.

Printed in U.S.A.
Prices and specifications subject to change without notice.
March 8, 1963 Supersedes May 1, 1962.

MyMopar.com

CODE	PART NAME AND DESCRIPTION	PER CAR	VALIANT LANCER	PLYMOUTH DODGE	CHRYSLER IMPERIAL
22-66-0	**WINDSHIELD - Cont'd**				
23-66-235	WEATHERSTRIP, Windshield Glass				
	Except Cv. Cp., SD3	1	---- ---	2166 675	
	Except Cv. Cp., SC1, SC2, SC3, except SD3	1	---- ---	2167 048	*2166 675
	Cv. Cp., SP2, SD2, SC1, SC2	1	---- ---	2167 048	1882 146
	Cv. Cp., SD3	1	---- ---	1882 146	
	SY1	1	---- ---	---- ---	2093 638
	Except SP. Cl. Cp.	1	2082 249		
	Sp. Cl. Cp.	1	2217 251		
23-66-239	LOCKINGSTRIP, Windshield Glass Weatherstrip				
	NOTE: See Exterior Moulding Illustrations in Front of Group 23 - Body.				
23-67-0	**WINDSHIELD WIPER**				
23-67-5	ARM, Windshield Wiper				
	SY1	1	---- ---	---- ---	2257 258-9
	Police, Right	1	---- ---	2291 978	
	Left	1	---- ---	2291 977	
	ARM and BRIDGE, Windshield Wiper	1	2076 678-9		
	ARM and Partial BLADE, Windshield Wiper				
	SC1, except SD3 Right	1	---- ---	2290 814	2258 106
	Left	1	---- ---	2290 815	2258 107
	SD3, SC2, SC3	1	---- ---	2258 106-7	2258 108-9
23-67-10	GEAR and DRIVE END COVER PLATE GASKET PACKAGE, Windshield Wiper Motor				
	w/Single Speed Auto-Lite Motor	1	*1879 601	*1879 601	*1879 601
	w/Variable Speed Auto-Lite Motor	1	*1879 601	*1879 598	*1879 598
23-67-16	BRUSH and SPRING PACKAGE, Windshield Wiper Motor				
	w/Single Speed Auto-Lite Motor	1	*1752 518	*1752 518	*1752 518
	w/Variable Speed Auto-Lite Motor	1	*1752 518	*1627 273	*1627 273
23-67-18	BRACKET, Windshield Wiper Motor Mounting				
	SD3 Single Speed	1	---- ---	1838 293	
	SD3 Variable Speed	1	---- ---	1838 289	
	Except SD3 Single Speed	1	2076 355	2258 552	1838 293
	Except SD3 Variable Speed	1	2076 355	2258 562	1838 289
23-67-20	GROMMET, Windshield Wiper Motor Mounting	3	1594 992	1594 992	1594 992
23-67-25	REFILL, Windshield Wiper Blade				
	SD3	2	2196 333	1818 892	1818 892
	Except SD3	2	---- ---	2426 255	
	BLADE, Windshield Wiper				
	SY1	2	---- ---	---- ---	1879 499
23-67-48	ADAPTER, Windshield Wiper Pivot Mounting				
	SY1	1	---- ---	---- ---	1704 062-3
23-67-49	GASKET, Windshield Wiper Pivot Mounting Adapter				
	SY1	2	---- ---	---- ---	1704 066
23-67-50	NUT, Windshield Wiper Pivot Adapter Mounting	2	---- ---	---- ---	1770 140
23-67-76	LEVER or ARM, Windshield Wiper Link Crank				
	SC1, except SD3 Single Speed	1	2076 081	2258 556	1838 936
	Variable Speed	1	2076 081	2258 566	1838 292
	SD3 Single Speed	1	---- ---	1838 936	
	Variable Speed	1	---- ---	1838 292	

★ Indicates use as required.
⊟ Indicates parts not listed in any previous parts book.
March 8, 1963 Supersedes May 1, 1962.

Printed in U.S.A.
Prices and specifications subject to change without notice.
Right and left part numbers are on same line, first number is right, second number is left.
* Indicates change or addition.

MyMopar.com

CODE	PART NAME AND DESCRIPTION	PER CAR	VALIANT LANCER	PLYMOUTH DODGE	CHRYSLER IMPERIAL
23-67-0	**WINDSHIELD WIPER - Cont'd**				
23-67-79	LINK, Windshield Wiper Crank Lever to Pivot				
	Cv. Cp., SC1, except SD3				
	Single Speed, Right	1	---- ---	*2258 554	*1838 934
	Left	1	---- ---	2258 555	2258 458
	Cv. Cp., SD3 Single Speed, Right	1	---- ---	*1838 934	
	Left	1	---- ---	*2258 458	
	Except Cv. Cp., SC1, except SD3				
	Single Speed, Right	1	*2076 618	*2258 554	*2198 363
	Left	1	2076 069	2258 555	2258 459
	Except, Cv. Cp., SD3				
	Single Speed, Right	1	---- ---	*2198 363	
	Left	1	---- ---	*2258 459	
	Cv. Cp., SC1, SC2, except SD3				
	Variable Speed, Right	1	---- ---	*2258 564	*1842 407
	Left	1	---- ---	2258 565	2258 457
	Cv. Cp., SD3 Variable Speed, Right	1	---- ---	*1842 407	
	Left	1	---- ---	*2258 457	
	Except Cv. Cp., SC1, SC2, SC3, except SD3				
	Variable Speed, Right	1	*2076 617	*2258 564	*2198 348
	Left	1	2076 071	2258 565	2257 849
	Except, Cv. Cp., SD3				
	Variable Speed, Right	1	---- ---	*2198 348	
	Left	1	---- ---	*2257 849	
	SY1 Variable Speed, Right	1	---- ---	---- ---	1841 679
	Left	1	---- ---	---- ---	2198 099
23-67-80	RETAINER, Windshield Wiper Link				
	To Pivot	2	1605 299	1605 299	1605 299
	To Crank Arm, Right	1	1642 029	1642 029	1642 029
	Left	1	1886 202	1886 202	1886 202
23-67-81	WASHER, Windshield Wiper Link to Crank Lever, Felt				
	SC1 w/Single Speed Wipers	2	1540 383	1540 383	1540 383
23-67-82	WASHER, Windshield Wiper Link to Pivot Brass	2	1605 604	1605 604	1605 604
	WASHER, Windshield Wiper Link to Motor Brass				
	SC1 w/Single Speed Wipers	1	---- ---	1622 352	1622 352
	WASHER, Windshield Wiper Link to Crank Lever				
	w/Variable Speed Wipers, Plain Type	1	1770 289	1770 289	1770 289
	Spring Type	2	1770 290	1770 290	1770 290
23-67-85	GASKET, Windshield Wiper Pivot Mounting				
	Cv. Cp., SC1, SC2, except SD3	2	---- ---	*2258 455	*1838 242
	Except Cv. Cp., SC1, SC2, SC3, except SD3	2	---- ---	*2258 455	*2198 407
	Cv. Cp., SD3	2	---- ---	*1838 242	
	Except, Cv. Cp., SD3	2	---- ---	*2198 407	
23-67-86	PIVOT, Windshield Wiper				
	Cv. Cp., SP2, SD2, SC1, SC2	2	---- ---	*2275 596	*1841 191
	Except Cv. Cp., SD3, SC1, SC2, SC3				
	Right	1	*2076 241	*2275 596	*2240 526
	Left	1	2076 241	2275 596	2240 527
	Cv. Cp., SD3	2	---- ---	*1841 191	
	Except Cv. Cp., SD3	1	---- ---	*2240 526-7	
	SY1	1	---- ---	---- ---	1841 682-3
23-67-91	SCREW and WASHER, Windshield Wiper Pivot				
	SY1	4	---- ---	---- ---	1704 061
23-67-95	NUT and WASHER, Windshield Wiper Pivot Mounting				
	SC1, SC2, SC3	4	2076 232	2076 232	2076 232

★ Indicates use as required.
⊟ Indicates parts not listed in any previous parts book.
Right and left part numbers are on same line, first number is right, second number is left.
* Indicates change or addition.

Printed in U.S.A.
Prices and specifications subject to change without notice.
May 1, 1962.

MyMopar.com

CODE	PART NAME AND DESCRIPTION	PER CAR	VALIANT LANCER	PLYMOUTH DODGE	CHRYSLER IMPERIAL
23-67-0	**WINDSHIELD WIPER - Cont'd**				
23-67-98	MOTOR, Windshield Wiper				
	SC1, except SD3 Single Speed	1	2084 884	2275 595	1879 583
	Except SD3 Variable Speed	1	2084 885	2275 594	1842 964
	SD3 Single Speed	1	---- ---	1879 583	
	SD3 Variable Speed	1	---- ---	1842 964	
23-67-100	SPACER, Windshield Wiper Motor Mounting to Bracket	3	1594 995	1594 995	1594 995
23-67-102	WASHER, Windshield Wiper Motor Mounting to Bracket	3	1594 993	1594 993	1594 993
23-67-129	REINFORCEMENT, Windshield Wiper Motor to Dash Panel Mounting, SD3	1	---- ---	1846 350	1846 350
23-67-139	GASKET, Windshield Wiper Pivot to Cowl	2	2076 084		
23-67-140	NUT, Windshield Wiper Pivot Gasket to Cowl	2	2076 085		
23-67-160	SWITCH, Windshield Wiper				
	SP1, SP2, SC1 Single Speed	1	2275 565	2240 533	1879 267
	SD3 Single Speed	1	---- ---	1879 267	
	SD1, SD2 Single Speed	1	---- ---	2275 583	
	SP1, SP2, SC1, SC2 Variable Speed	1	2256 509	2096 988	2256 518
	SD1, SD2 Variable Speed	1	---- ---	2256 514	
	SC1 Single Speed, use w/Washers	1	---- ---	---- ---	⊟2426 134
	SD3, SC1, SC2, SC3 Variable Speed, use w/Washers	1	---- ---	⊟2426 130	⊟2426 130
	SY1 Variable Speed, use w/Washers	1	---- ---	---- ---	⊟2426 129
23-67-161	NUT, Windshield Wiper Switch Mounting				
	SP1, SP2	1	1339 711	1887 603	
	SD1, SD2, SY1	1	---- ---	2258 823	1439 758
23-67-163	CIRCUIT BREAKER, Windshield Wiper Switch				
	w/TERMINAL	1	1770 661	1770 661	1770 661
	w/o Terminal	1	1642 384	1642 384	1642 384
23-67-164	SWITCH CONTACT, COVER PLATE and GASKET PACKAGE, Windshield Wiper Motor				
	w/Single Speed-Auto-Lite Motor	1	*1879 602	*1879 602	*1879 602
	w/Variable Speed Auto-Lite Motor	1	*2298 880	*2298 876	*1879 599
	w/Variable Speed General Industries Motor	1	⊟2448 611		
23-67-166	TERMINAL, Windshield Wiper Circuit Breaker w/Variable Speed Wipers	1	1770 660	1770 660	1770 660
23-67-194	KNOB, Windshield Wiper Switch				
	SL1, SP1, SP2, SY1	1	2275 585	1887 591	2256 282
	SV1, SD1, SD2, SC1, SC2	1	2298 883	2197 379	2257 955
	SD3, SC1, SC2, SC3 w/WASHERS	1	---- ---	2257 481	2257 953
23-67-195	BEZEL, Windshield Wiper Switch				
	SP1, SP2, SC1, SC2, SC3	1	2256 544	1887 602	1887 962
	SD3	1	---- ---	1887 789	
23-67-198	SPRING, Windshield Wiper Switch Control Knob Retaining	1	2076 146		
23-67-202	SPRING, Windshield Wiper Link w/Variable Speed Wipers	2	1605 602	1605 602	1605 602
23-67-203	TRIP, Windshield Wiper Link Spring w/Variable Speed Wipers	2	1753 712	1753 712	1753 712
23-67-204	CAM, Windshield Wiper Link w/Variable Speed Wipers	2	1753 711	1753 711	1753 711

★ Indicates use as required.
⊟ Indicates parts not listed in any previous parts book.
March 8, 1963 Supersedes May 1, 1962.

Printed in U.S.A.
Prices and specifications subject to change without notice.
Right and left part numbers are on same line, first number is right, second number is left.
* Indicates change or addition.

MyMopar.com

1962 CHRYSLER
1962 IMPERIAL

INTERIOR TRIM

HOW TO USE INTERIOR TRIM ILLUSTRATIONS

The illustrations in this section are actual and each body style showing the Interior Trim is included.

The letters shown on the illustration indicate the description of the part and the part type code when referred to the legend which appears preceding the listing of the parts. The letters are consistent throughout the illustrations as "A" is always a Door Trim Panel, Code 23-92-5.

The numbers on the illustration indicate the distribution of material and type of material used. The numbers may vary with each illustration. The legend appears on the illustration.

For complete information on "How to Order" Trim Parts, see Mopar Parts Price List.

MyMopar.com

1962 CHRYSLER - S SERIES

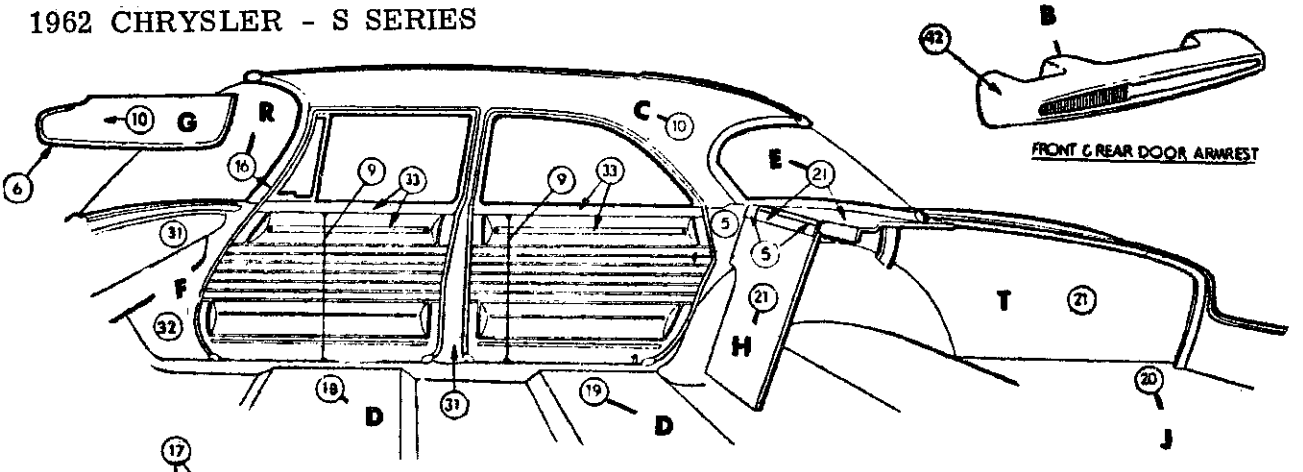

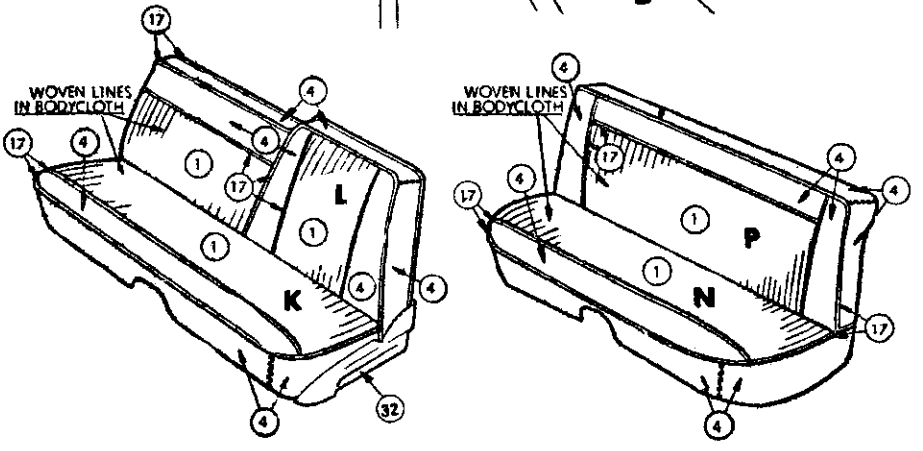

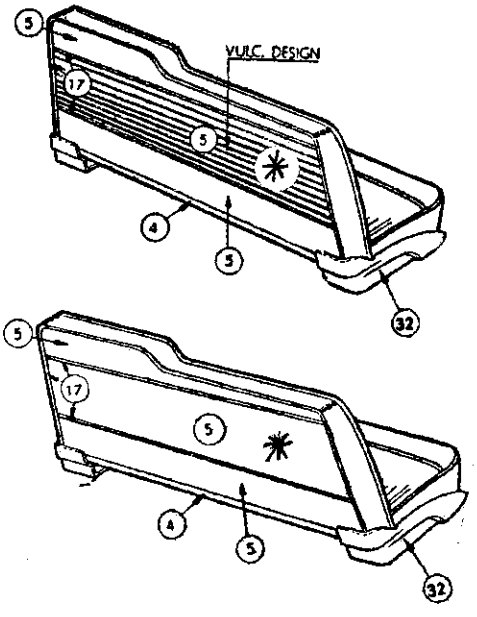

DISTRIBUTION OF MATERIAL

1	BODY CLOTH I	
4	IMITATION LEATHER	28-AM-22
5	IMITATION LEATHER	19-C-22
6	IMITATION LEATHER	19A-C-22
9	IMITATION LEATHER	.012-L-22
10	IMITATION LEATHER	12-Y-70
16	LACE	
17	EXTRUDEL VINYL	
18	FLOOR COVERING-FRONT-RUBBER	
19	FLOOR COVERING-REAR-RUBBER	
20	FLOOR COVERING-LUGG. COMPT. RUBBER	
21	EMBOSSED CARDBOARD	
30	PLASTIC	
31	PAINT	
32	METAL	
33	MOULDING	
35	POLYETHYLENE	
36	MYLAR	
38	MOULDED RESIN	
39	CARPET	
41	MOULDED VINYL	
42	PLASTISOL	

* Early Type w/Insert
Late Type w/o Insert

Distribution Drawing Legend Page Appears Following Illustration Section

Codes 301, 303, 304, 305

SCL-411 1962 CHRYSLER SC1-L 4 DOOR SEDAN
CLOTH & IMITATION LEATHER TRIM

MyMopar.com

1962 CHRYSLER - S SERIES

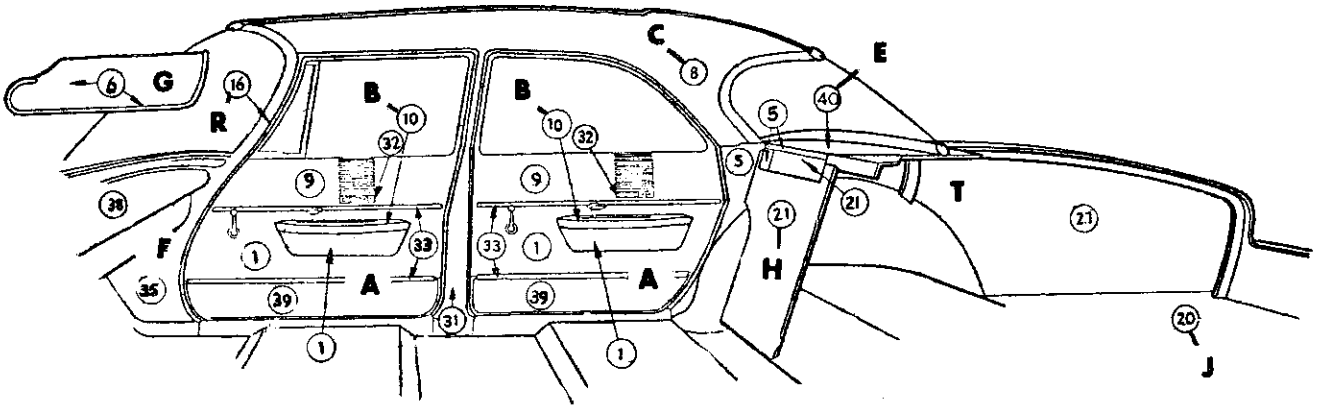

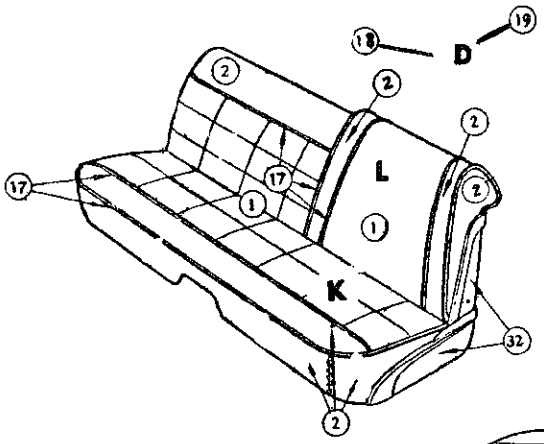

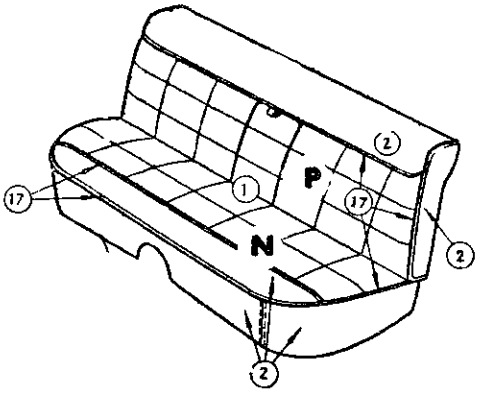

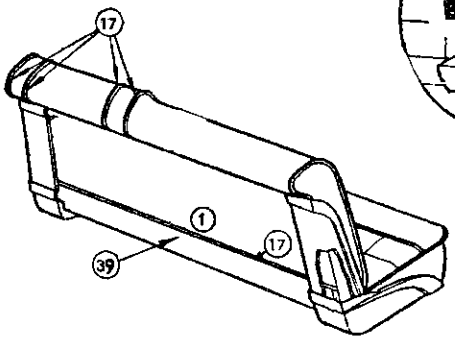

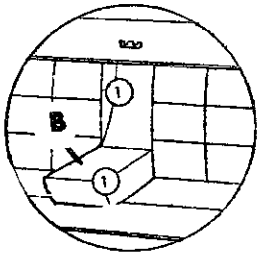

DISTRIBUTION OF MATERIAL

1	BODY CLOTH 1	
2	BODY CLOTH 2	
3	HEADLINING	
5	IMITATION LEATHER	19-C-22
6	IMITATION LEATHER	19A-C-22
7	IMITATION LEATHER	19B-C-22
8	IMITATION LEATHER	18-T-16
9	IMITATION LEATHER	22-AR-22
10	IMITATION LEATHER	28-AM-22
17	EXTRUDED VINYL	
18	FLOOR COVERING-FRONT-CARPET	
19	FLOOR COVERING-REAR-CARPET	
20	FLOOR COVERING-LUGG. COMPT. CARPET	
21	EMBOSSED CARDBOARD	
30	PLASTIC	
31	PAINT	
32	METAL	
33	MOULDING	
35	POLYETHYLENE	
36	MYLAR	
38	MOULDED RESIN	
39	CARPET	
40	WOVEN PAPER	

Distribution Drawing Legend Page Appears Following Illustration Section

Codes 321, 323, 324

SCH-412 **1962 CHRYSLER SC3-H 4 DOOR SEDAN CLOTH TRIM**

MyMopar.com

1962 CHRYSLER - S SERIES

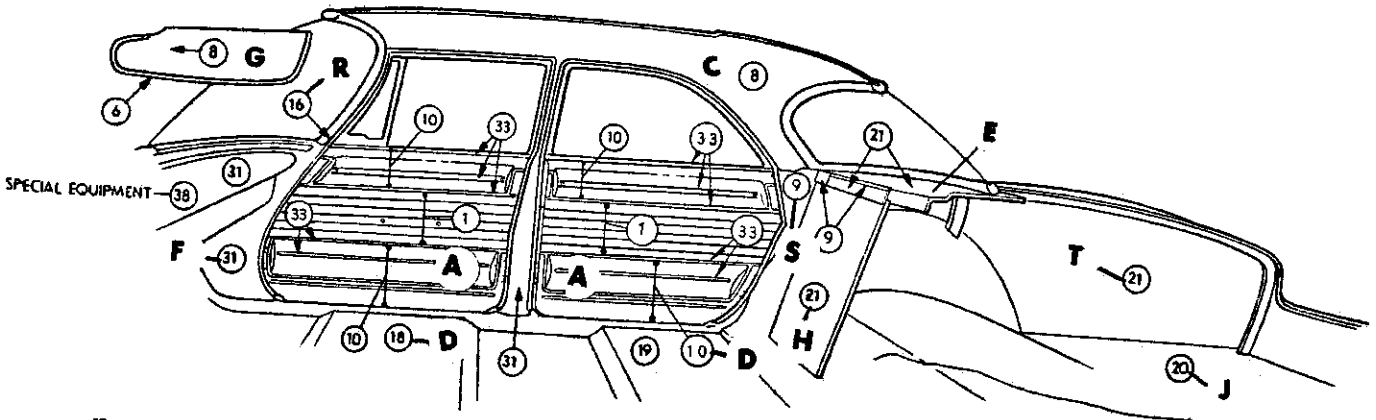

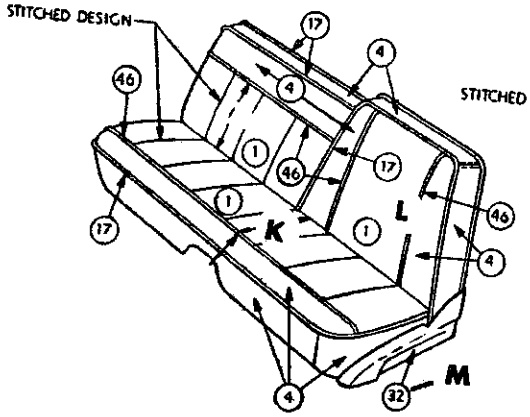

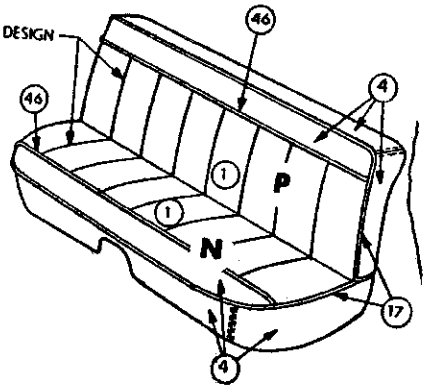

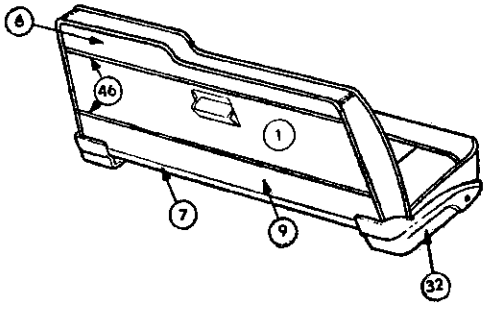

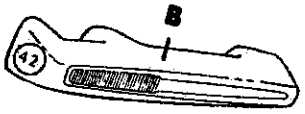

DISTRIBUTION OF MATERIAL

1	BODY CLOTH I	
4	IMITATION LEATHER	28-AM-22
6	IMITATION LEATHER	19-C-22
7	IMITATION LEATHER	28A-AM-22
8	IMITATION LEATHER	17-C-81
9	IMITATION LEATHER	19A-C-22
10	IMITATION LEATHER	.012-L-22
16	LACE	
17	EXTRUDED VINYL	
18	FLOOR COVERING-FRONT-CARPET	
19	FLOOR COVERING-REAR-CARPET	
20	FLOOR COVERING-LUGG. COMPT. RUBBER	
21	EMBOSSED CARDBOARD	
30	PLASTIC	
31	PAINT	
32	METAL	
33	MOULDING	
36	MYLAR	
38	MOULDED RESIN	
39	CARPET	
42	PLASTISOL	
46	EXTRUDED VINYL NO. 2	

Distribution Drawing Legend Page Appears Following Illustration Section

Codes 302, 308

SCL-411A 1962 CHRYSLER SC1-L 4 DOOR SEDAN
CLOTH & IMITATION LEATHER TRIM

MyMopar.com

1962 CHRYSLER - S SERIES

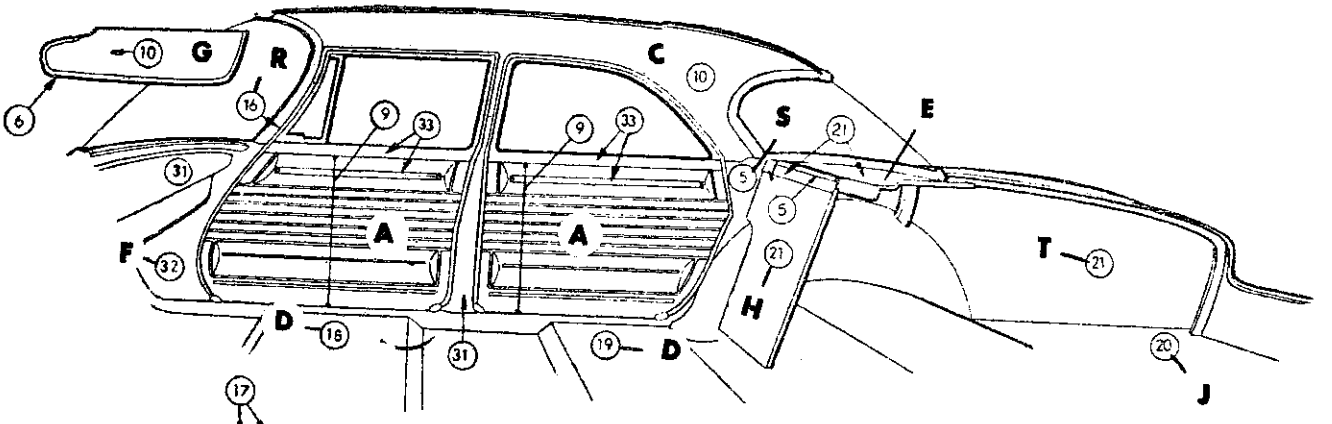

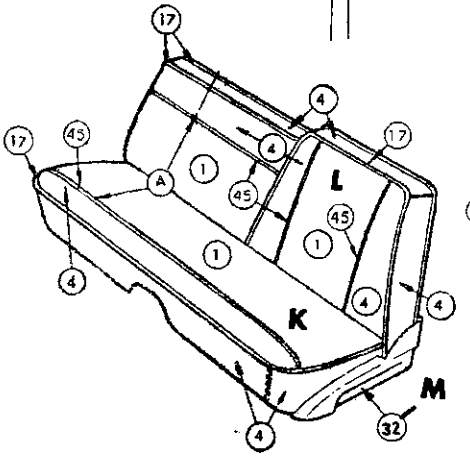

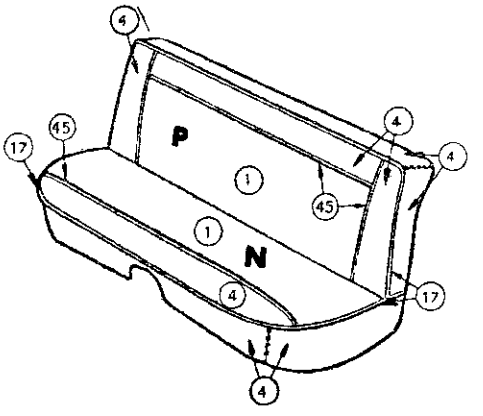

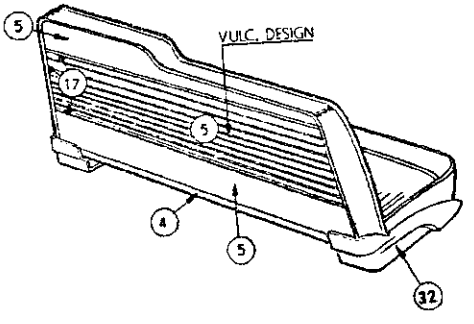

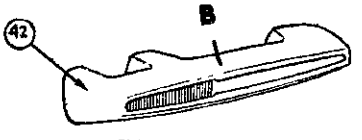

FRONT & REAR DOOR ARMREST

DISTRIBUTION OF MATERIAL

1	BODY CLOTH	1
4	IMITATION LEATHER	28-AM-22
5	IMITATION LEATHER	19-C-22
6	IMITATION LEATHER	19A-C-22
9	IMITATION LEATHER	.012-L-22
10	IMITATION LEATHER	12-Y-70
16	LACE	
17	EXTRUDED VINYL	
18	FLOOR COVERING-FRONT-RUBBER	
19	FLOOR COVERING-REAR-RUBBER	
20	FLOOR COVERING-LUGG. COMPT. -RUBBER	
21	EMBOSSED CARDBOARD	
30	PLASTIC	
31	PAINT	
32	METAL	
33	MOULDING	
35	POLYETHYLENE	
36	MYLAR	
38	MOULDED RESIN	
39	CARPET	
41	MOULDED VINYL	
42	PLASTISOL	
45	MYLAR WELT	

Distribution Drawing Legend Page Appears Following Illustration Section

Codes 341, 343, 344, 345

SCL-411B 1962 CHRYSLER SC1-L 4 DOOR SEDAN
CLOTH & IMITATION LEATHER TRIM

MyMopar.com

1962 CHRYSLER - S SERIES

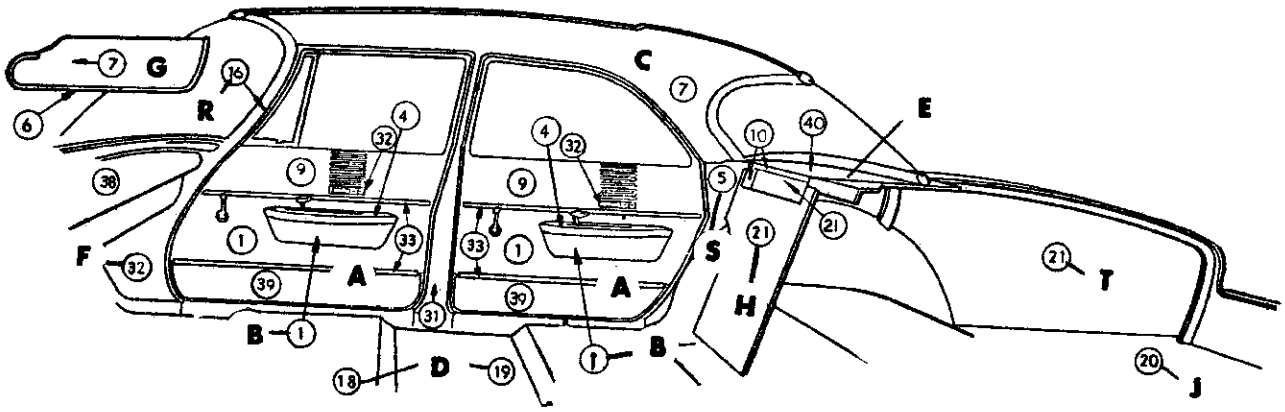

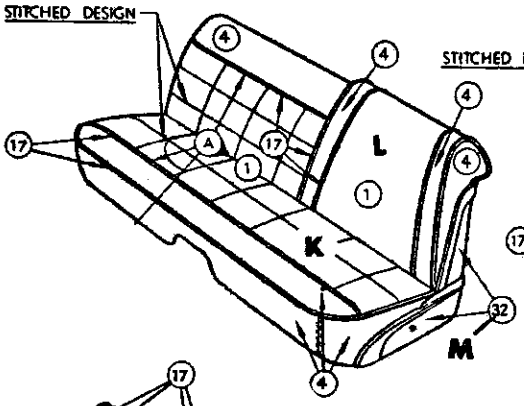

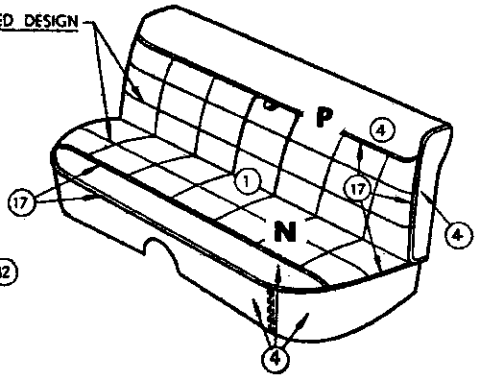

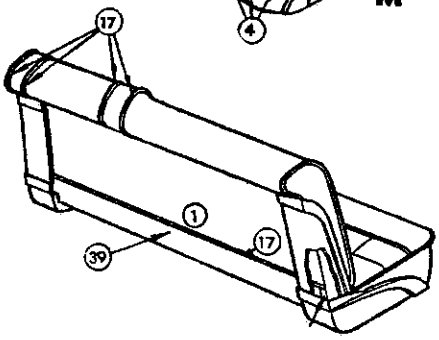

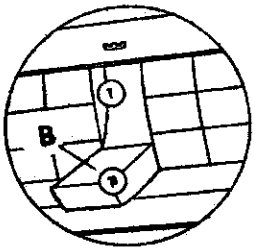

DISTRIBUTION OF MATERIAL

1	BODY CLOTH 1	
4	IMITATION LEATHER	28-AM-22
5	IMITATION LEATHER	19-C-22
6	IMITATION LEATHER	19A-C-22
7	IMITATION LEATHER	12-Y-70
8	IMITATION LEATHER	19B-C-22
9	IMITATION LEATHER	22-AR-22
10	IMITATION LEATHER	19C-C-22
16	LACE	
17	EXTRUDED VINYL	
18	FLOOR COVERING-FRONT-CARPET	
19	FLOOR COVERING-REAR-CARPET	
20	FLOOR COVERING-LUGG. COMPT. CARPET	
21	EMBOSSED CARDBOARD	
30	PLASTIC	
31	PAINT	
32	METAL	
33	MOULDING	
36	MYLAR	
38	MOULDED RESIN	
39	CARPET	
40	WOVEN PAPER	

Distribution Drawing Legend Page Appears Following Illustration Section

Codes 331, 333, 334, 335

SCH-411 1962 CHRYSLER SC3-H 4 DOOR SEDAN
CLOTH & IMITATION LEATHER TRIM

MyMopar.com

NOTES

MyMopar.com

1962 CHRYSLER - S SERIES

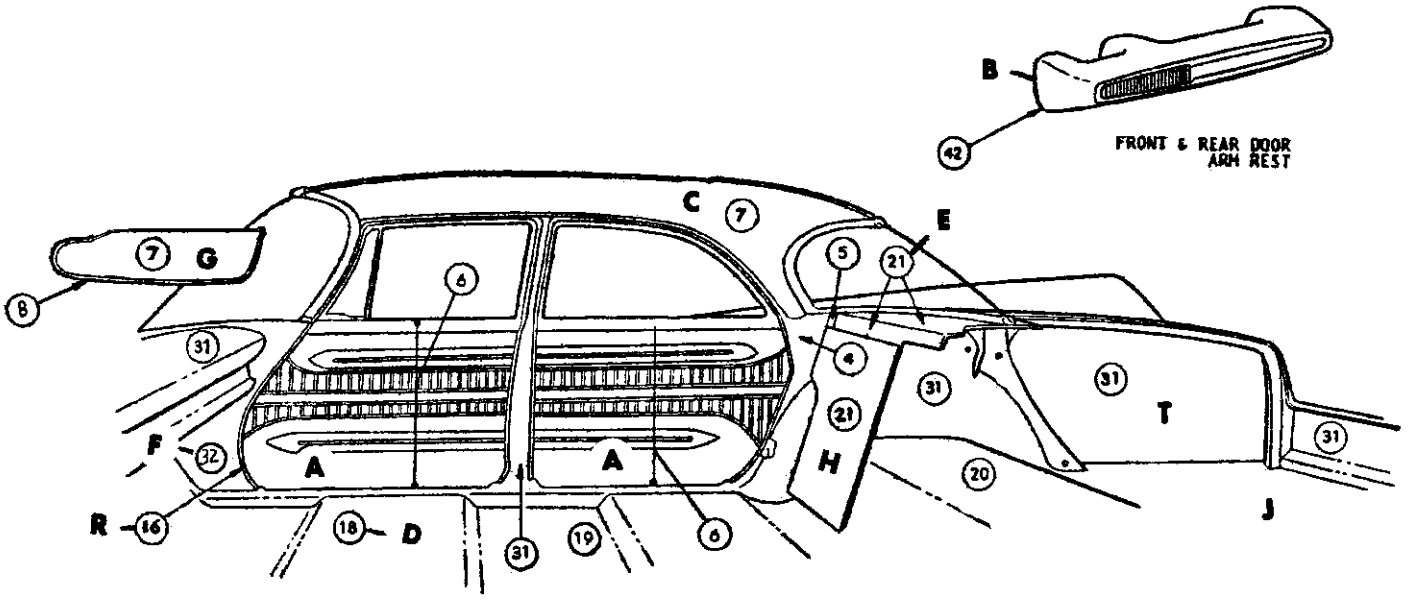

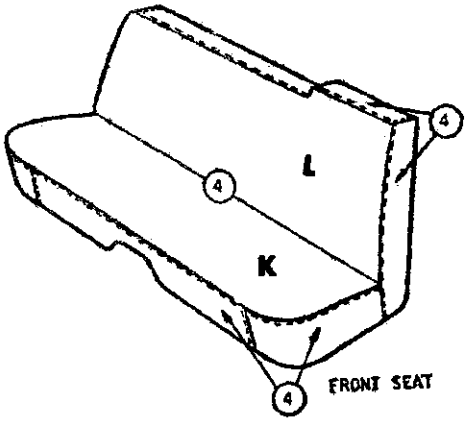

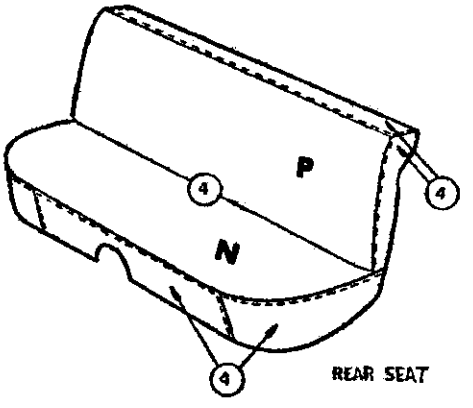

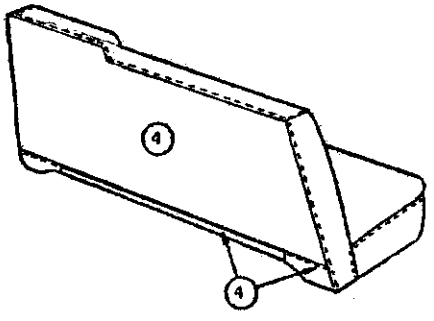

DISTRIBUTION OF MATERIAL

4	IMITATION LEATHER	37-CX-22
5	IMITATION LEATHER	19-C-22
6	IMITATION LEATHER	.012-L-22
7	IMITATION LEATHER	12-Y-70
8	IMITATION LEATHER	19A-C-22
16	LACE	
17	EXTRUDED VINYL	
18	FLOOR COVERING-FRONT-RUBBER	
19	FLOOR COVERING-REAR-RUBBER	
20	FLOOR COVERING-LUGG. COMPT. RUBBER	
21	EMBOSSED CARDBOARD	
30	PLASTIC	
31	PAINT	
32	METAL	
36	MYLAR	
38	MOULDED RESIN	
42	PLASTISOL	

Distribution Drawing Legend Page Appears Following Illustration Section

Code 444

SCL-414 **1962 CHRYSLER SC1-L, SC3-H 4 DOOR SEDAN IMITATION LEATHER TRIM**

MyMopar.com

1962 CHRYSLER AND IMPERIAL - S SERIES

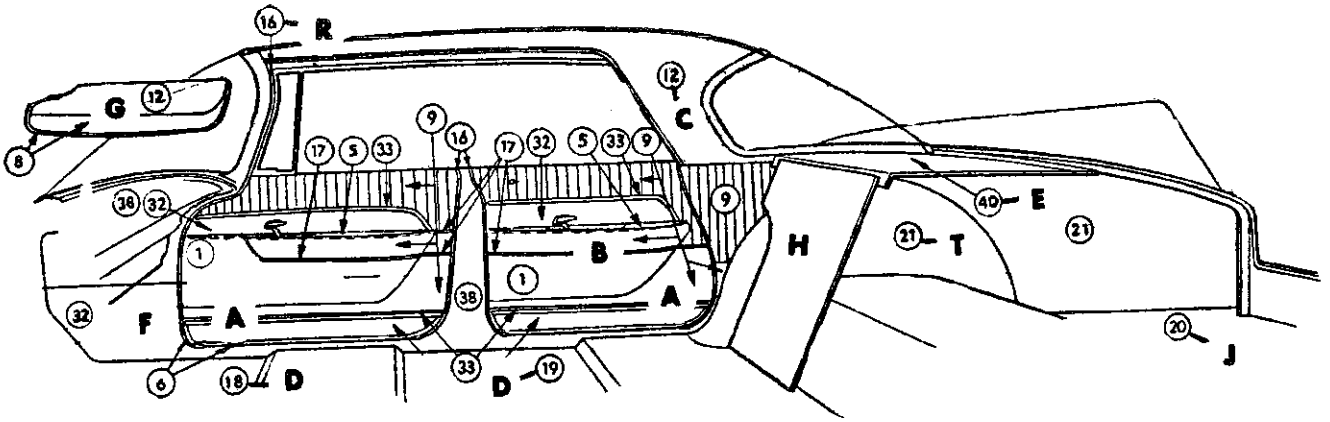

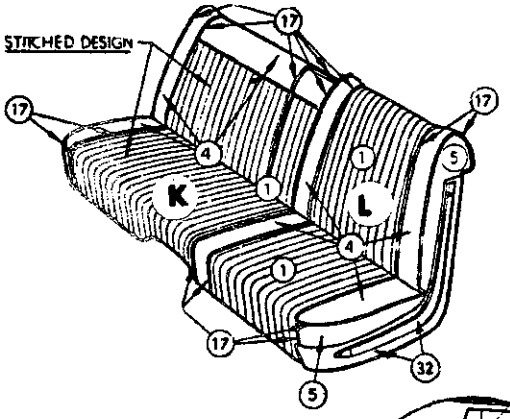

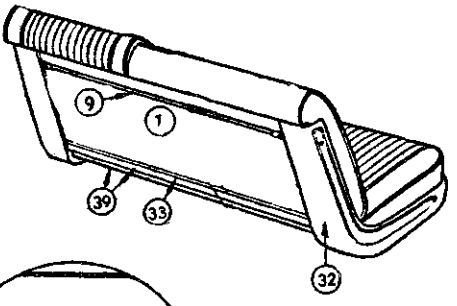

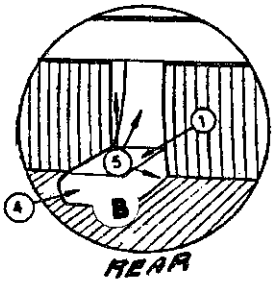

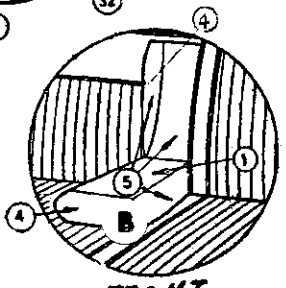

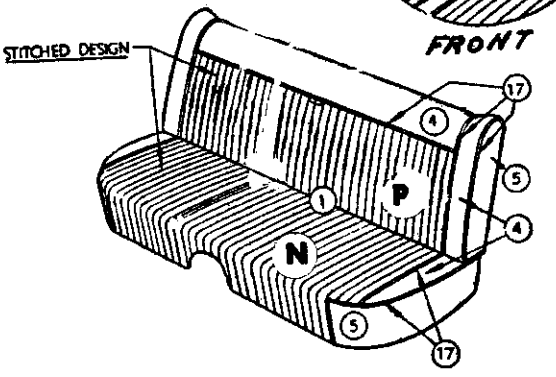

DISTRIBUTION OF MATERIAL

1	BODY CLOTH 1	
4	LEATHER	
5	IMITATION LEATHER	28-AM-22
6	IMITATION LEATHER	19-C-22
8	IMITATION LEATHER	19B-C-22
9	IMITATION LEATHER	22-AR-22
12	IMITATION LEATHER	19-C-5
17	EXTRUDED VINYL	
18	FLOOR COVERING-FRONT-CARPET	
19	FLOOR COVERING-REAR-CARPET	
20	FLOOR COVERING-LUGG. COMPT. CARPET	
21	EMBOSSED CARDBOARD	
30	PLASTIC	
31	PAINT	
32	METAL	
33	MOULDING	
35	POLYETHYLENE	
36	MYLAR	
38	MOULDED RESIN	
39	CARPET	
40	WOVEN PAPER	

Distribution Drawing Legend Page Appears Following Illustration Section

Codes 511, 512, 513, 514, 515, 516

SYM-435 **1962 IMPERIAL SY1-M SPECIAL 4 DOOR SEDAN CLOTH AND LEATHER COMBINATION**

MyMopar.com

1962 CHRYSLER AND IMPERIAL - S SERIES

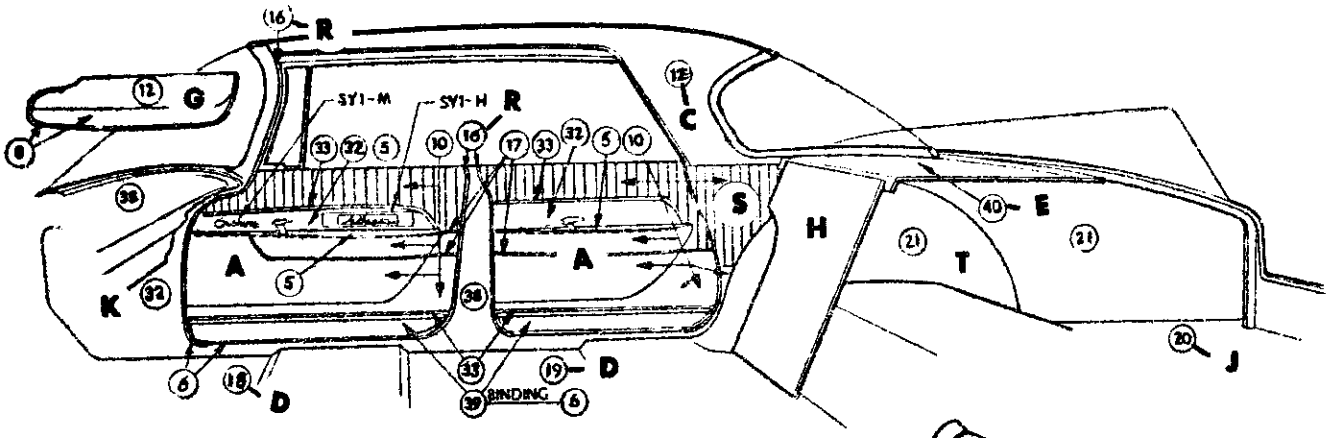

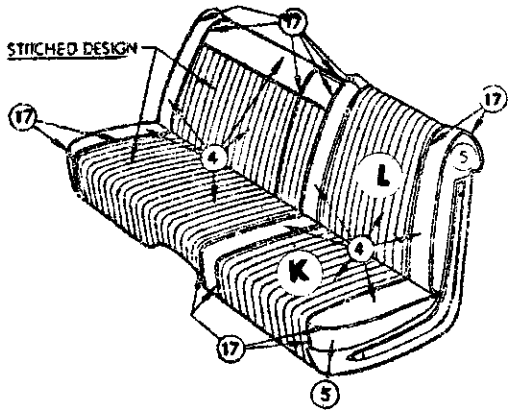

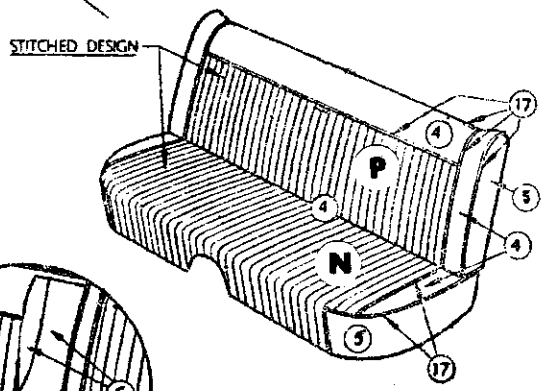

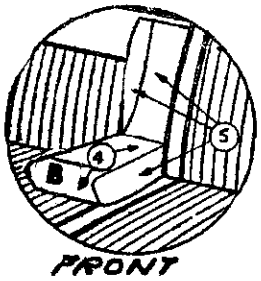

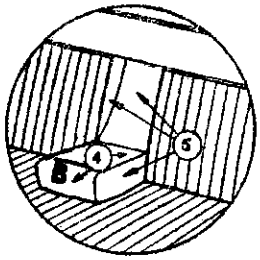

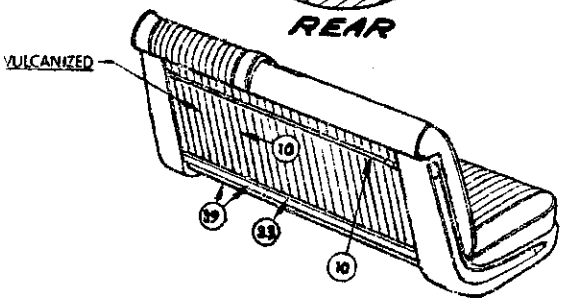

DISTRIBUTION OF MATERIAL

4	LEATHER	
5	IMITATION LEATHER	28-AM-22
6	IMITATION LEATHER	19-C-22
8	IMITATION LEATHER	19B-C-22
10	IMITATION LEATHER	22-AR-22
12	IMITATION LEATHER	19-C-5
17	EXTRUDED VINYL	
18	FLOOR COVERING-FRONT-CARPET	
19	FLOOR COVERING-REAR-CARPET	
20	FLOOR COVERING-LUGG. COMPT. CARPET	
21	EMBOSSED CARDBOARD	
30	PLASTIC	
31	PAINT	
32	METAL	
33	MOULDING	
35	POLYETHYLENE	
36	MYLAR	
38	MOULDED RESIN	
39	CARPET	
40	WOVEN PAPER	

Distribution Drawing Legend Page Appears Following Illustration Section

Codes 553, 555, 556, 557

SYM-433 1962 IMPERIAL SY1-M, SY1-H SPECIAL 4 DOOR SEDAN LEATHER TRIM

MyMopar.com

1962 CHRYSLER AND IMPERIAL - S SERIES

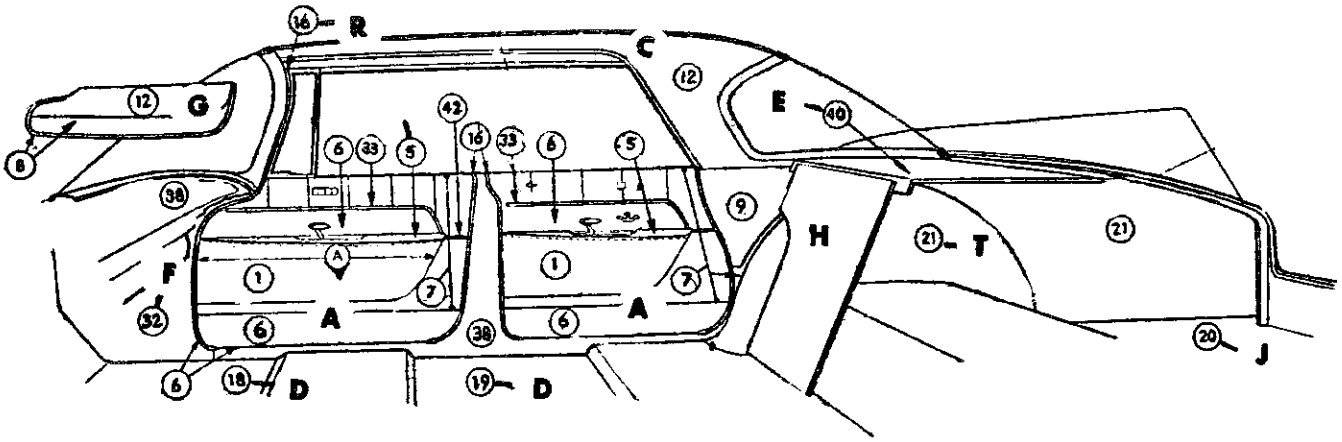

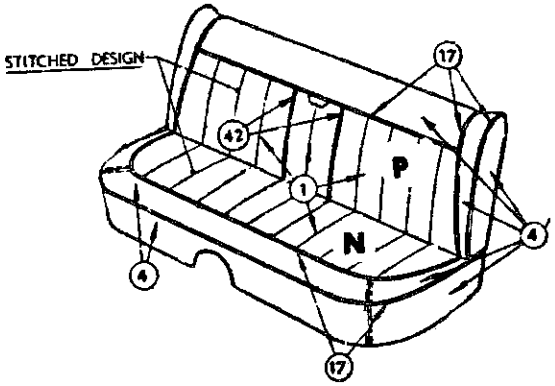

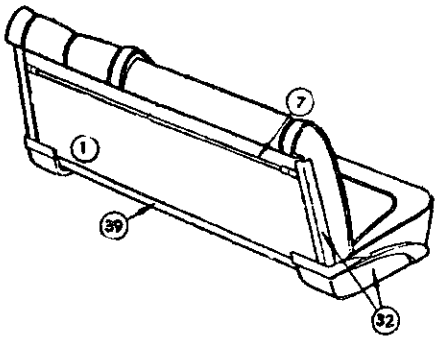

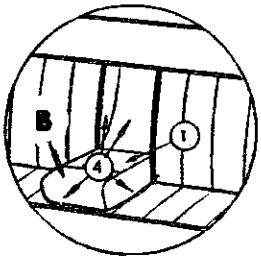

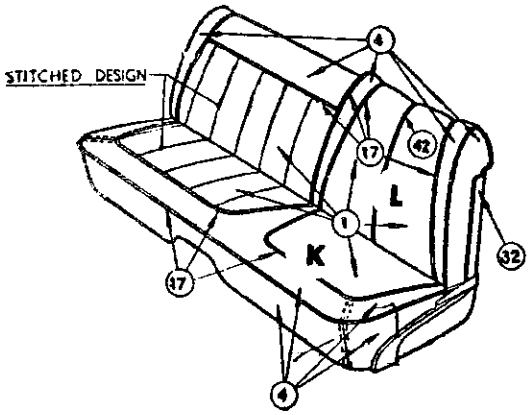

DISTRIBUTION OF MATERIAL

1	BODY CLOTH	1
4	IMITATION LEATHER	28-AM-22
5	IMITATION LEATHER	28A-AM-22
6	IMITATION LEATHER	19-C-22
7	IMITATION LEATHER	22-AR-22
8	IMITATION LEATHER	19B-C-22
9	IMITATION LEATHER	19C-C-22
12	IMITATION LEATHER	19-C-5
17	EXTRUDED VINYL WELT NO. 1	
18	FLOOR COVERING-FRONT-CARPET	
19	FLOOR COVERING-REAR-CARPET	
20	FLOOR COVERING-LUGG. COMPT. CARPET	
21	EMBOSSED CARDBOARD	
30	PLASTIC	
31	PAINT	
32	METAL	
33	MOULDING	
35	POLYETHYLENE	
36	MYLAR	
38	MOULDED RESIN	
39	CARPET	
40	WOVEN PAPER	
42	EXTRUDED VINYL WELT NO. 2	

Distribution Drawing Legend Page Appears Following Illustration Section

Codes 501, 502, 503, 504

SYL-431 1962 IMPERIAL SY1-L SPECIAL 4 DOOR SEDAN
CLOTH AND IMITATION LEATHER COMBINATION

MyMopar.com

1962 CHRYSLER - S SERIES

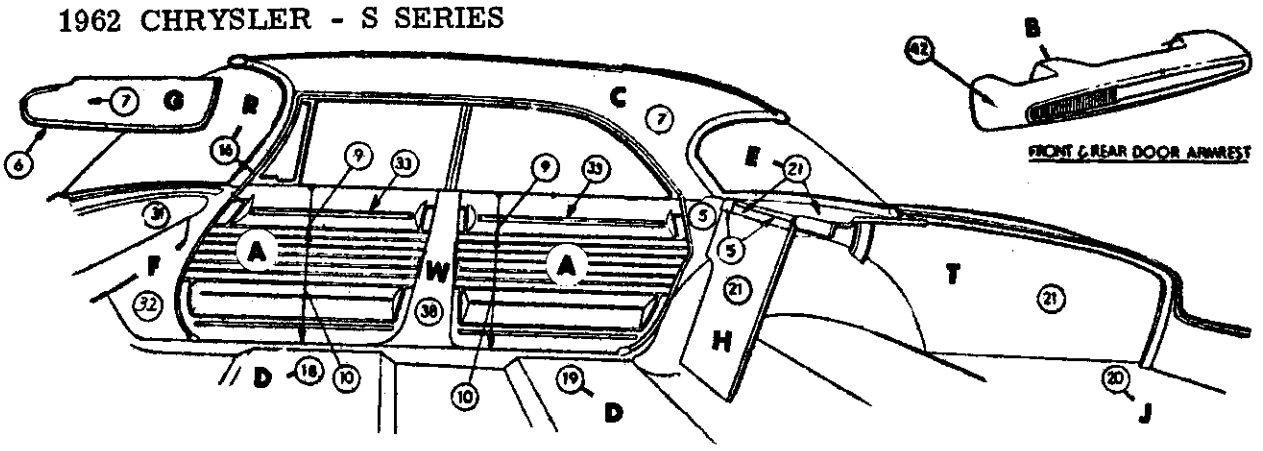

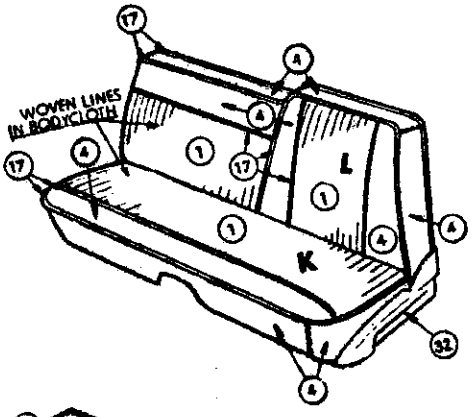

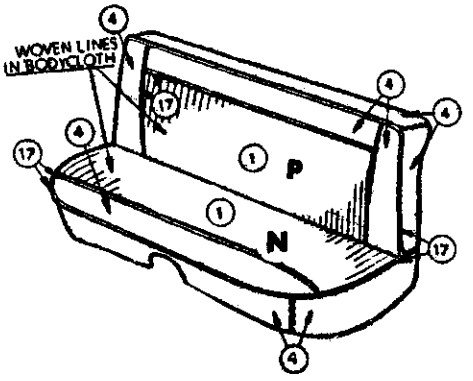

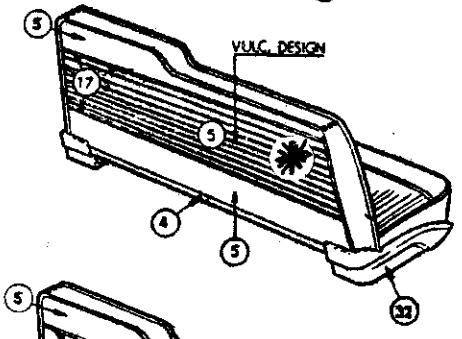

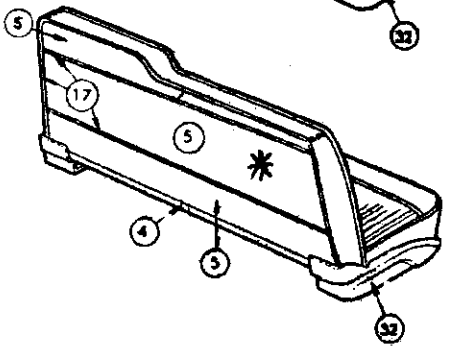

DISTRIBUTION OF MATERIAL

1	BODY CLOTH I	
4	IMITATION LEATHER	28-AM-22
5	IMITATION LEATHER	19-C-22
6	IMITATION LEATHER	19A-C-22
7	IMITATION LEATHER	12-Y-70
9	IMITATION LEATHER	19-DJ-22
10	IMITATION LEATHER	.012-L-22
16	LACE	
17	EXTRUDED VINYL	
18	FLOOR COVERING-FRONT-RUBBER	
19	FLOOR COVERING-REAR-RUBBER	
20	FLOOR COVERING-LUGG. COMPT. RUBBER	
21	EMBOSSED CARDBOARD	
30	PLASTIC	
31	PAINT	
32	METAL	
33	MOULDING	
35	POLYETHYLENE	
36	MYLAR	
38	MOULDED RESIN	
39	CARPET	
41	MOULDED VINYL	
42	PLASTISOL	

* Early Type w/Insert
Late Type w/o Insert

Distribution Drawing Legend Page Appears Following Illustration Section

Codes 301, 303, 304, 305

SCL-431 1962 CHRYSLER SC1-L 4 DOOR HARD TOP
CLOTH & IMITATION LEATHER TRIM

MyMopar.com

1962 CHRYSLER - S SERIES

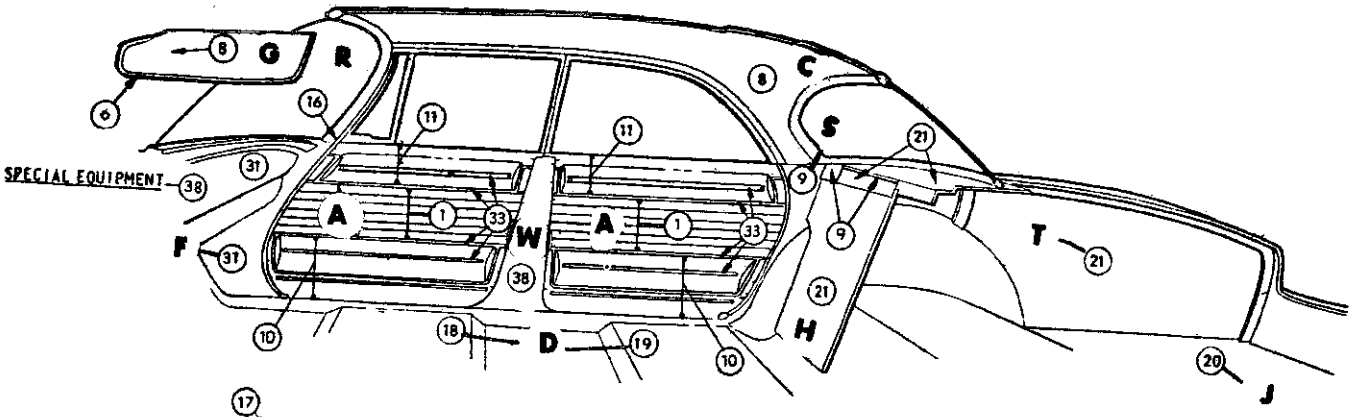

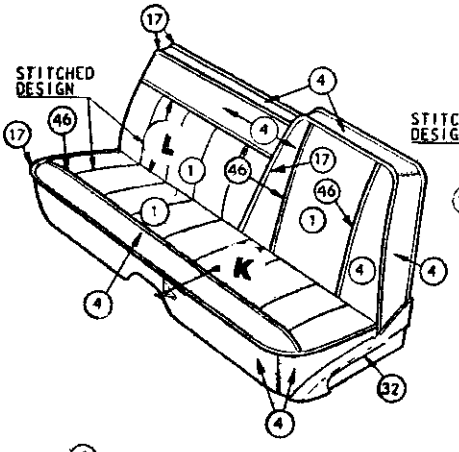

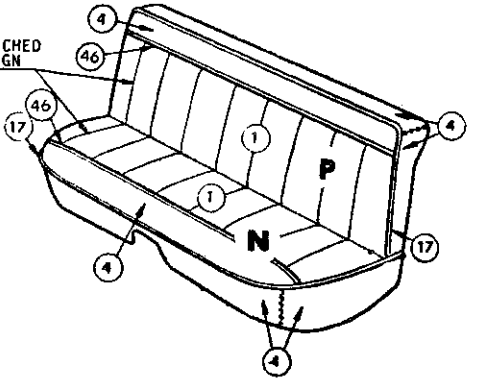

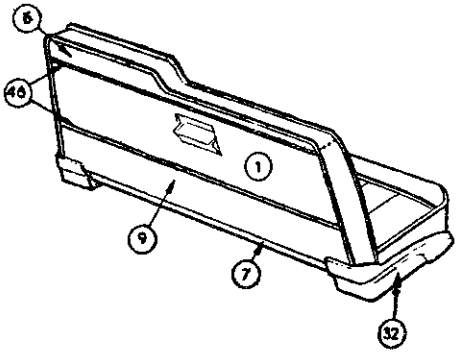

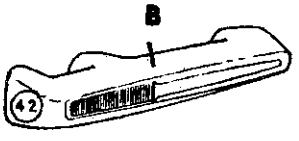

FRONT & REAR DOOR ARMREST

DISTRIBUTION OF MATERIAL

1	BODY CLOTH 1	
4	IMITATION LEATHER	28-AM-22
6	IMITATION LEATHER	19-C-22
7	IMITATION LEATHER	28A-AM-22
8	IMITATION LEATHER	17-C-81
9	IMITATION LEATHER	19A-C-22
10	IMITATION LEATHER	.012-L-22
11	IMITATION LEATHER	19-DJ-22
16	LACE	
17	EXTRUDED VINYL NO. 1	
18	FLOOR COVERING-FRONT-CARPET	
19	FLOOR COVERING-REAR-CARPET	
20	FLOOR COVERING-LUGG. COMPT. RUBBER	
21	EMBOSSED CARDBOARD	
30	PLASTIC	
31	PAINT	
32	METAL	
33	MOULDING	
36	MYLAR	
38	MOULDED RESIN	
42	PLASTISOL	
46	EXTRUDED VINYL NO. 2	

Distribution Drawing Legend Page Appears Following Illustration Section

Codes 302, 308

SCL-431A 1962 CHRYSLER SC1-L 4 DOOR HARD TOP
CLOTH & IMITATION LEATHER TRIM

MyMopar.com

1962 CHRYSLER - S SERIES

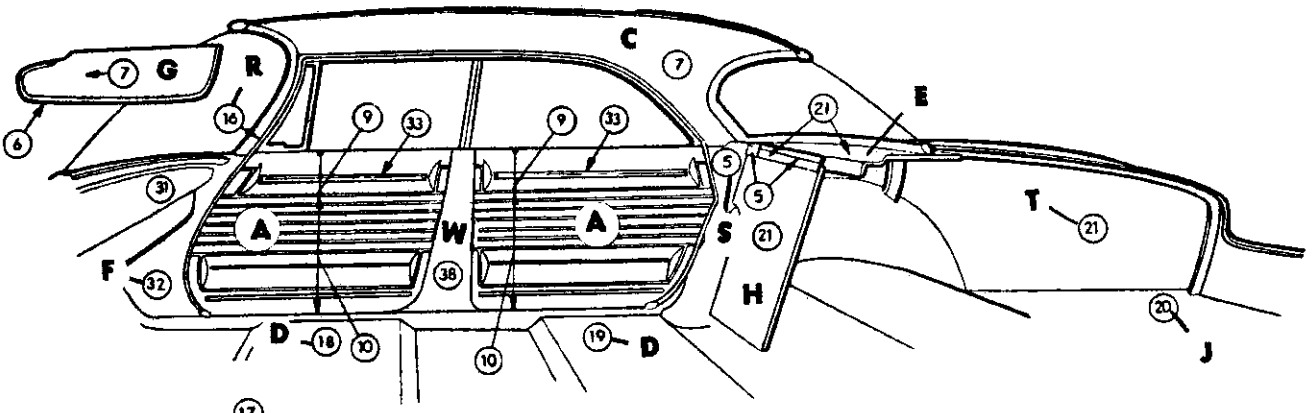

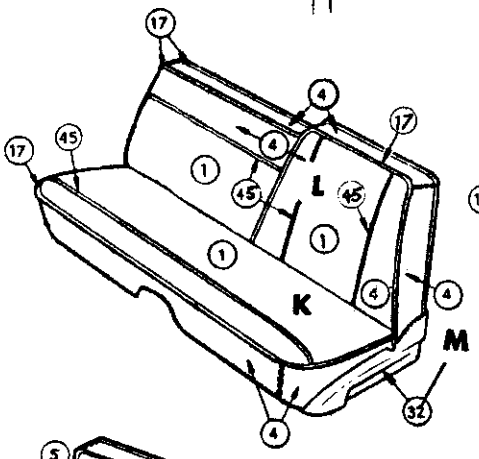

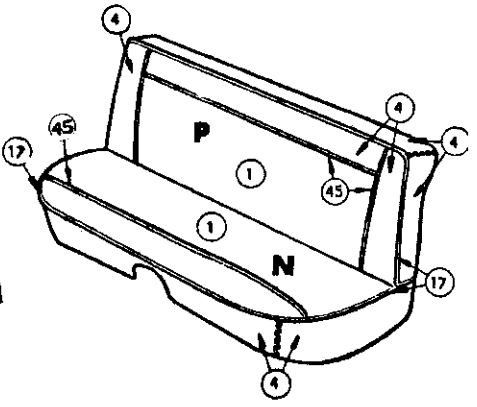

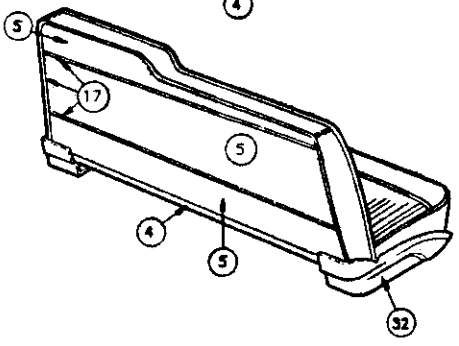

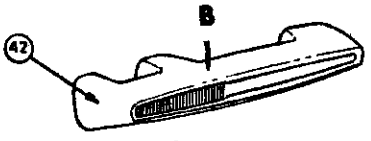

FRONT & REAR DOOR ARMREST

DISTRIBUTION OF MATERIAL

1	BODY CLOTH	
4	IMITATION LEATHER	28-AM-22
5	IMITATION LEATHER	19-C-22
6	IMITATION LEATHER	19A-C-22
7	IMITATION LEATHER	12-Y-70
9	IMITATION LEATHER	19-DJ-22
10	IMITATION LEATHER	.012-L-22
16	LACE	
17	EXTRUDED VINYL	
18	FLOOR COVERING-FRONT-RUBBER	
19	FLOOR COVERING-REAR-RUBBER	
20	FLOOR COVERING-LUGG. COMPT.-RUBBER	
21	EMBOSSED CARDBOARD	
30	PLASTIC	
31	PAINT	
32	METAL	
33	MOULDING	
35	POLYETHYLENE	
36	MYLAR	
38	MOULDED RESIN	
39	CARPET	
41	MOULDED VINYL	
42	PLASTISOL	
45	MYLAR WELT	

Distribution Drawing Legend Page Following Illustration Section

Codes 341, 343, 344, 345

SCL-431B 1962 CHRYSLER SC1-L 4 DOOR HARD TOP
CLOTH & IMITATION LEATHER TRIM

MyMopar.com

1962 CHRYSLER - S SERIES

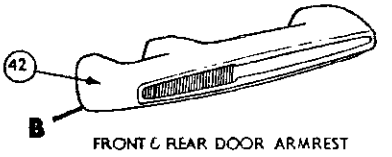

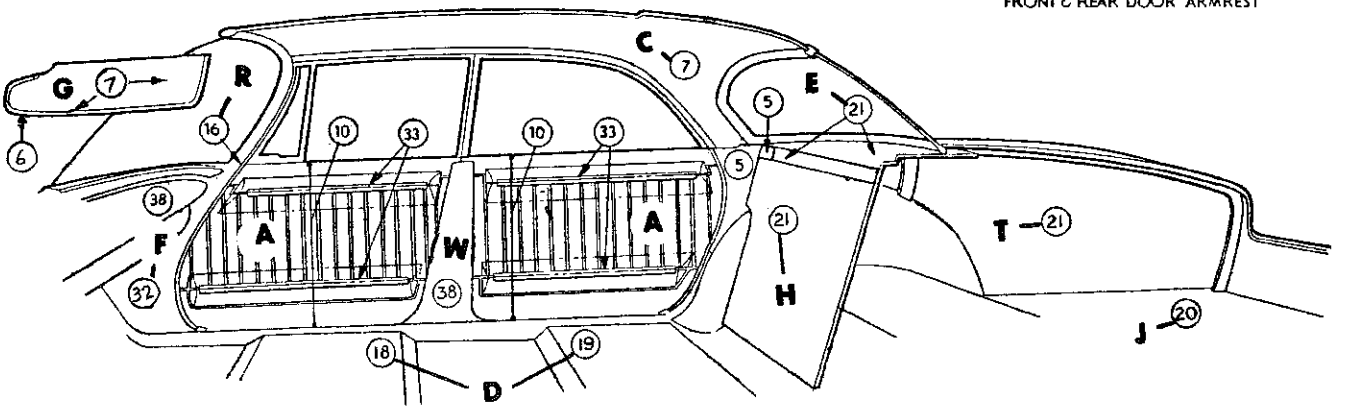

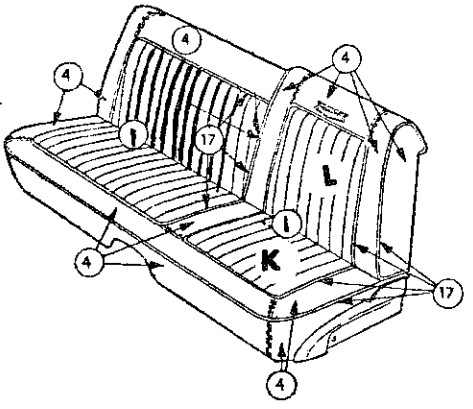

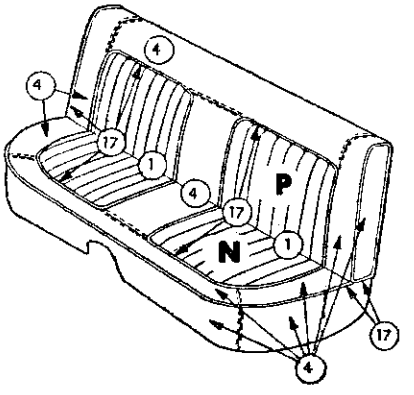

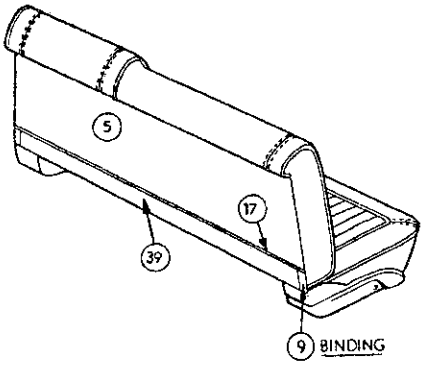

DISTRIBUTION OF MATERIAL

1	BODY CLOTH I	
4	IMITATION LEATHER	28-AM-22
5	IMITATION LEATHER	19-C-22
6	IMITATION LEATHER	19A-C-22
7	IMITATION LEATHER	12-Y-70
9	IMITATION LEATHER	19B-C-22
10	IMITATION LEATHER	19-DJ-22
16	LACE	
17	EXTRUDED VINYL	
18	FLOOR COVERING-FRONT-CARPET	
19	FLOOR COVERING-REAR-CARPET	
20	FLOOR COVERING-LUGG. COMPT. RUBBER	
21	EMBOSSED CARDBOARD	
30	PLASTIC	
31	PAINT	
32	METAL	
33	MOULDING	
36	MYLAR	
38	MOULDED RESIN	
39	CARPET	
42	PLASTISOL	

Distribution Drawing Legend Page Appears Following Illustration Section

Codes 313, 314, 315

SCM-431 **1962 CHRYSLER SC2-M 4 DOOR HARD TOP CLOTH & IMITATION LEATHER TRIM**

MyMopar.com

1962 CHRYSLER - S SERIES

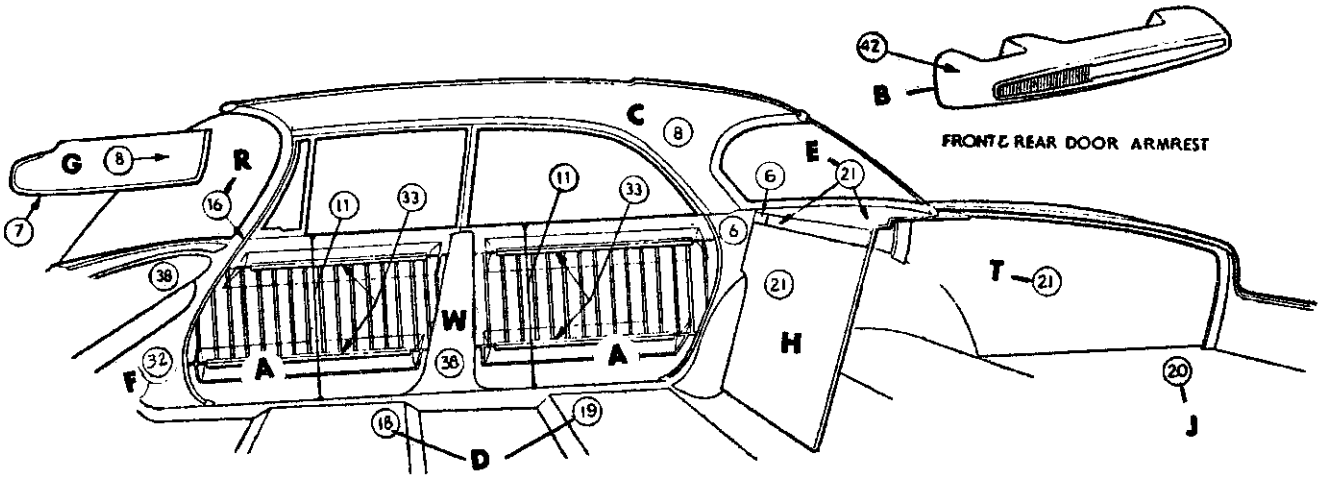

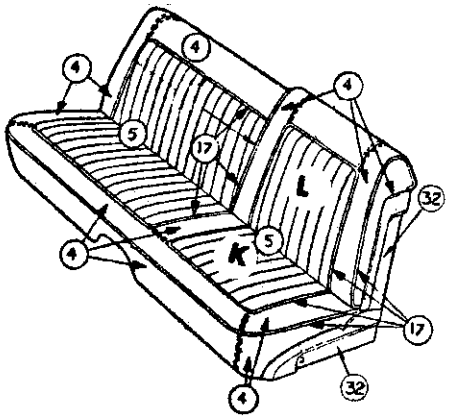

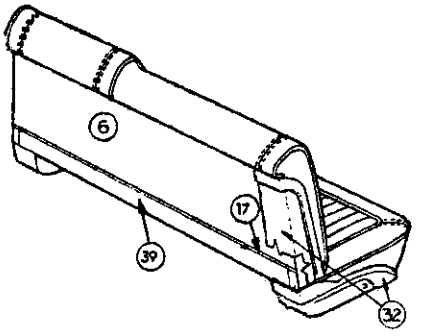

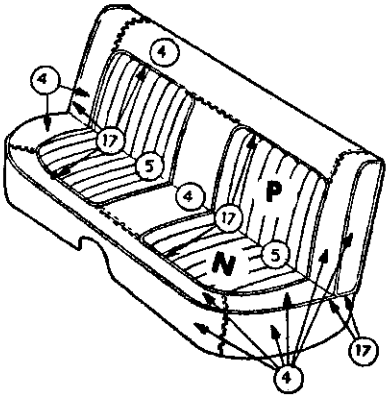

DISTRIBUTION OF MATERIAL

4	IMITATION LEATHER	28-AM-22
5	IMITATION LEATHER	28-AM-46
6	IMITATION LEATHER	19-C-22
7	IMITATION LEATHER	19A-C-22
8	IMITATION LEATHER	12-Y-70
10	IMITATION LEATHER	19B-C-22
11	IMITATION LEATHER	19-DJ-22
16	LACE	
17	EXTRUDED VINYL	
18	FLOOR COVERING-FRONT-CARPET	
19	FLOOR COVERING-REAR-CARPET	
20	FLOOR COVERING-LUGG. COMPT. RUBBER	
21	EMBOSSED CARDBOARD	
30	PLASTIC	
31	PAINT	
32	METAL	
33	MOULDING	
36	MYLAR	
38	MOULDED RESIN	
39	CARPET	
42	PLASTISOL	

Distribution Drawing Legend Page Appears Following Illustration Section

Codes 413, 414, 415

SCM-434 1962 CHRYSLER SC2-M 4 DOOR HARD TOP
IMITATION LEATHER TRIM

MyMopar.com

1962 CHRYSLER - S SERIES

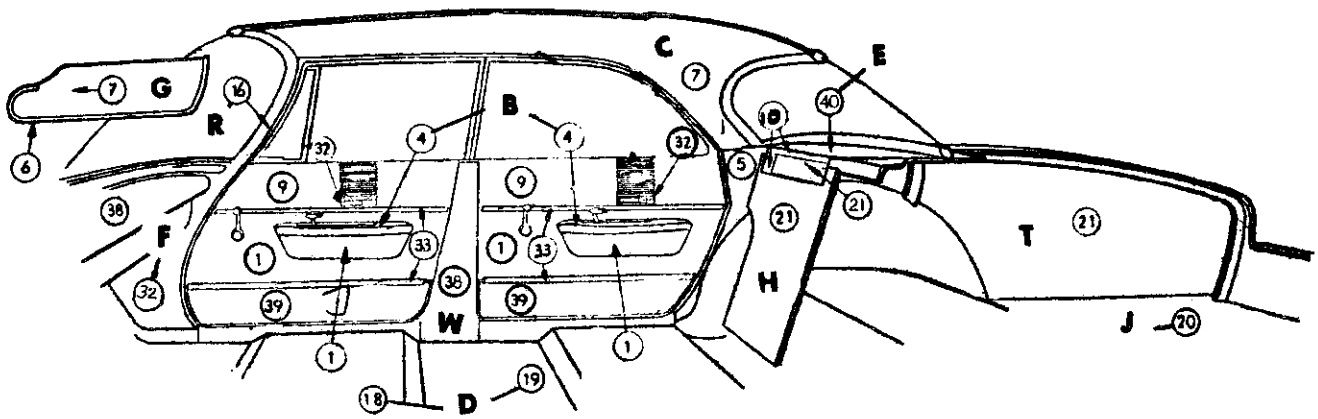

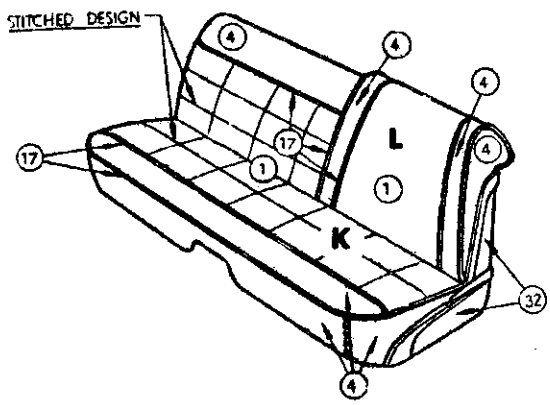

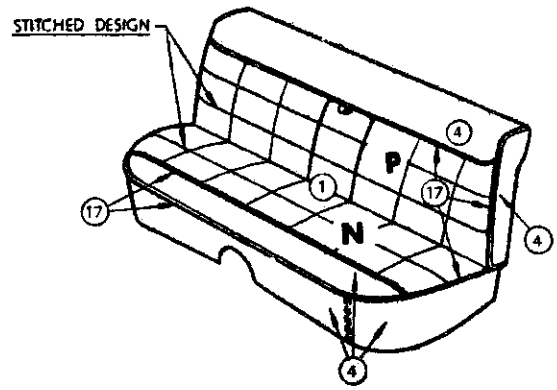

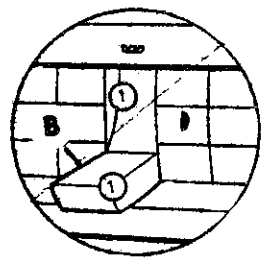

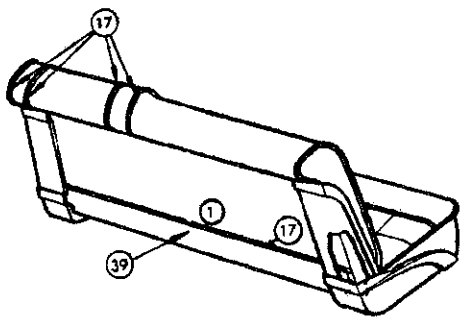

DISTRIBUTION OF MATERIAL

1	BODY CLOTH 1	
4	IMITATION LEATHER	28-AM-22
5	IMITATION LEATHER	19-C-22
6	IMITATION LEATHER	19A-C-22
7	IMITATION LEATHER	12-Y-70
8	IMITATION LEATHER	19B-C-22
9	IMITATION LEATHER	22-AR-22
10	IMITATION LEATHER	19C-C-22
16	LACE	
17	EXTRUDED VINYL	
18	FLOOR COVERING-FRONT-CARPET	
19	FLOOR COVERING-REAR-CARPET	
20	FLOOR COVERING-LUGG. COMPT. CARPET	
21	EMBOSSED CARDBOARD	
30	PLASTIC	
31	PAINT	
32	METAL	
33	MOULDING	
36	MYLAR	
38	MOULDED RESIN	
39	CARPET	
40	WOVEN PAPER	

Distribution Drawing Legend Page Appears Following Illustration Section

Codes 331, 333, 334, 335

SCH-431 **1962 CHRYSLER SC3-H 4 DOOR HARD TOP CLOTH & IMITATION LEATHER TRIM**

MyMopar.com

1962 CHRYSLER - S SERIES

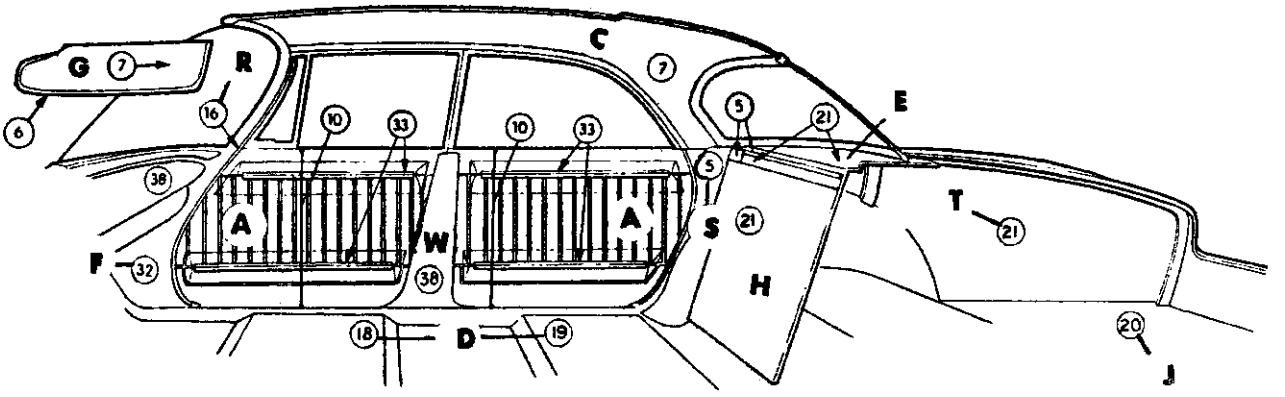

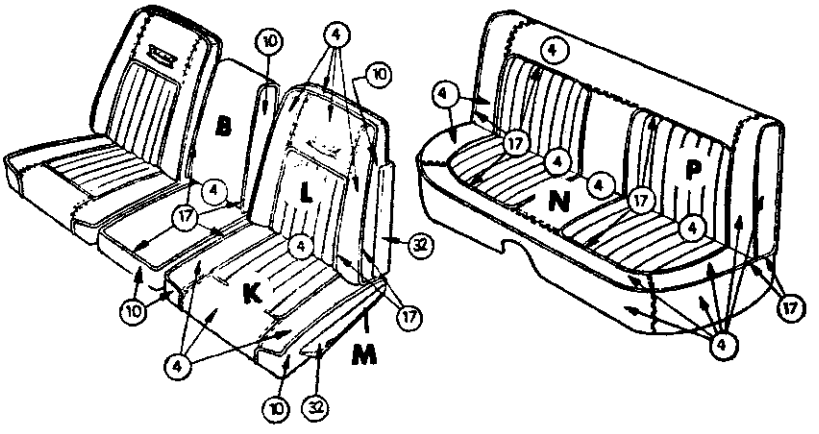

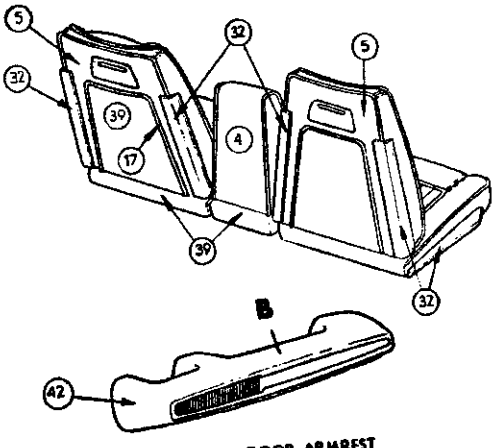

FRONT & REAR DOOR ARMREST

DISTRIBUTION OF MATERIAL

4	IMITATION LEATHER	28-AM-22
5	IMITATION LEATHER	19-C-22
6	IMITATION LEATHER	19A-C-22
7	IMITATION LEATHER	12-Y-70
9	IMITATION LEATHER	19B-C-22
10	IMITATION LEATHER	19-DJ-22
16	LACE	
17	EXTRUDED VINYL	
18	FLOOR COVERING-FRONT-CARPET	
19	FLOOR COVERING-REAR-CARPET	
20	FLOOR COVERING-LUGG. COMPT. RUBBER	
21	EMBOSSED CARDBOARD	
30	PLASTIC	
31	PAINT	
32	METAL	
33	MOULDING	
36	MYLAR	
38	MOULDED RESIN	
39	CARPET	
42	PLASTISOL	

Distribution Drawing Legend Page Appears Following Illustration Section

Codes 453, 454, 455

SCM-433 1962 CHRYSLER SC2-M 4 DOOR HARD TOP LEATHER TRIM

MyMopar.com

NOTES

MyMopar.com

1962 CHRYSLER - S SERIES

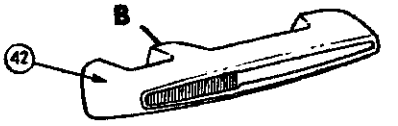

FRONT & REAR DOOR ARMREST

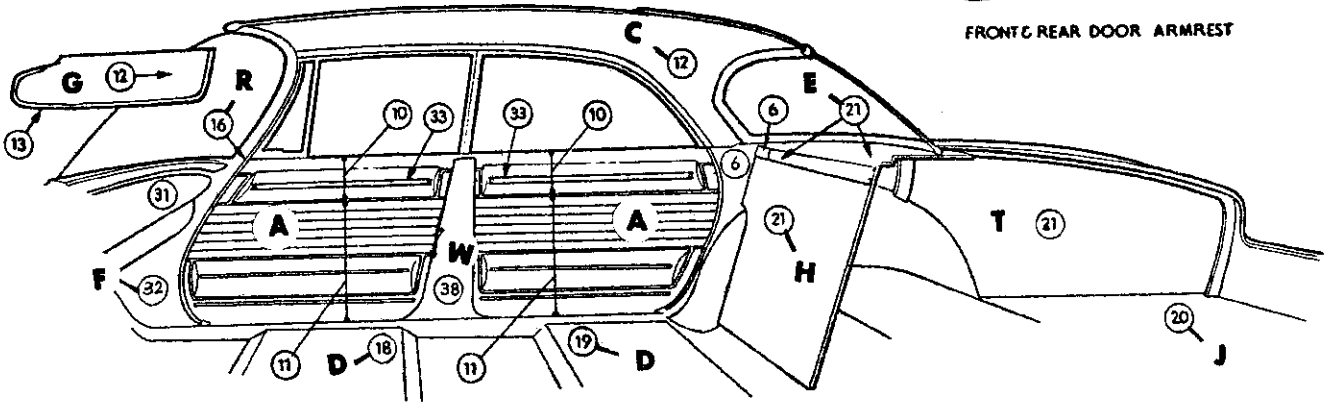

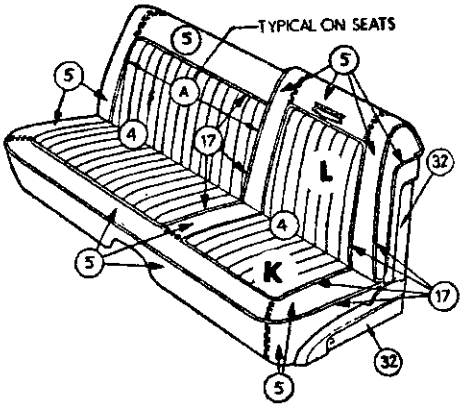

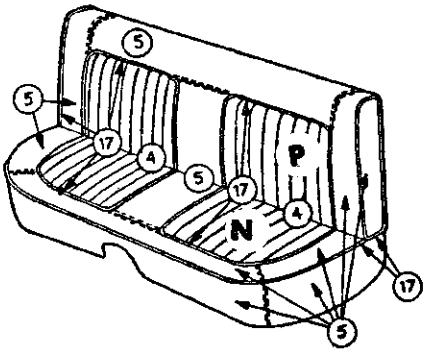

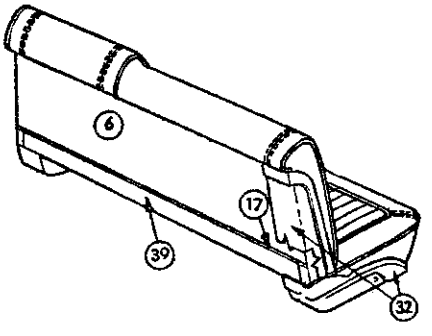

DISTRIBUTION OF MATERIAL

3	HEADLINING	
4	IMITATION LEATHER	28-AM-46
5	IMITATION LEATHER	28-AM-22
6	IMITATION LEATHER	19-C-22
9	IMITATION LEATHER	19B-C-22
10	IMITATION LEATHER	19-DJ-22
11	IMITATION LEATHER	.012-L-22
12	IMITATION LEATHER	12A-Y-70
13	IMITATION LEATHER	19C-C-22
16	LACE	
17	EXTRUDED VINYL	
18	FLOOR COVERING-FRONT-RUBBER	
19	FLOOR COVERING-REAR-RUBBER	
20	FLOOR COVERING-LUGG. COMPT. RUBBER	
21	EMBOSSED CARDBOARD	
30	PLASTIC	
31	PAINT	
32	METAL	
33	MOULDING	
36	MYLAR	
38	MOULDED RESIN	
39	CARPET	
42	PLASTISOL	

Distribution Drawing Legend Page Appears Following Illustration Section

Codes 404, 405

SCL-434 **1962 CHRYSLER SC1-L 4 DOOR HARD TOP IMITATION LEATHER TRIM**

MyMopar.com

1962 CHRYSLER - S SERIES

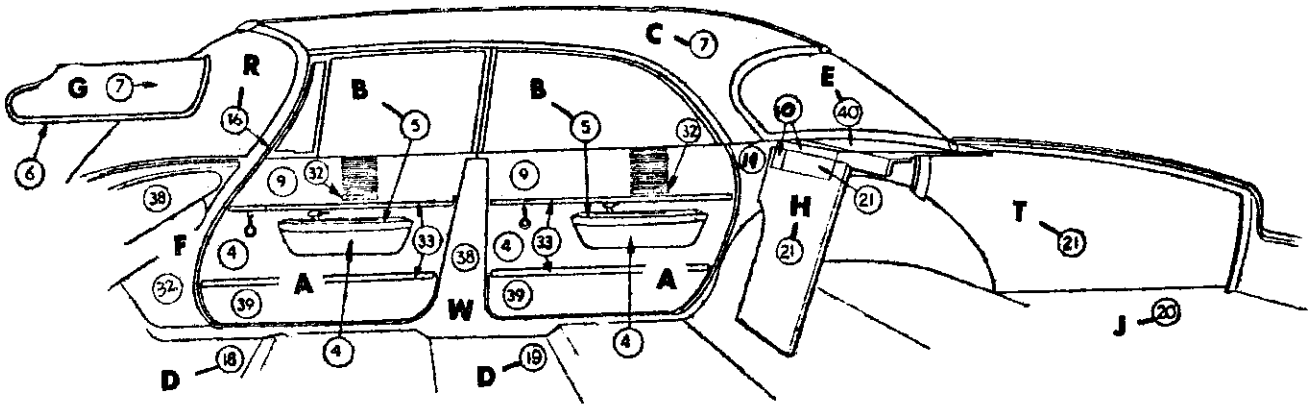

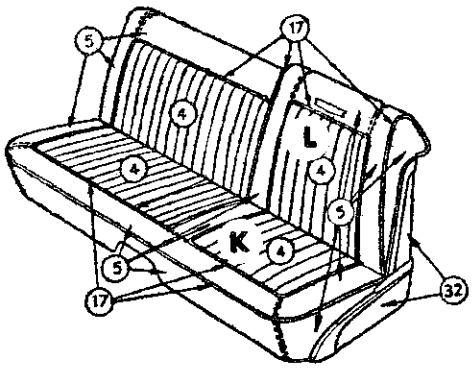

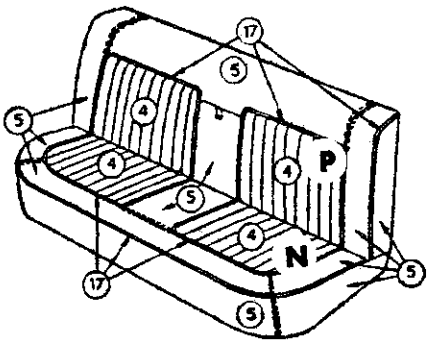

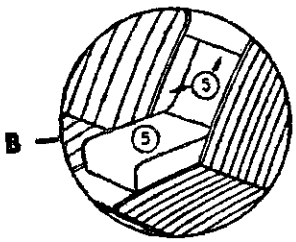

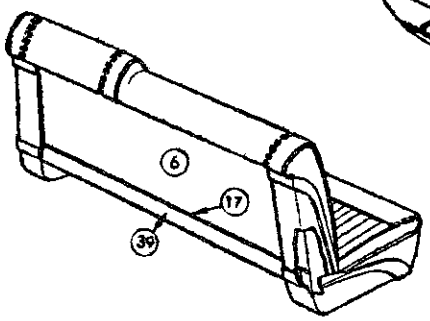

DISTRIBUTION OF MATERIAL

4	IMITATION LEATHER	28-AM-22
5	IMITATION LEATHER	28-AM-46
6	IMITATION LEATHER	19-C-22
7	IMITATION LEATHER	19A-C-22
8	IMITATION LEATHER	12-Y-70
9	IMITATION LEATHER	22-AR-22
10	IMITATION LEATHER	19B-C-22
11	IMITATION LEATHER	19-DJ-22
16	LACE	
17	EXTRUDED VINYL	
18	FLOOR COVERING-FRONT-CARPET	
19	FLOOR COVERING-REAR-CARPET	
20	FLOOR COVERING-LUGG. COMPT. CARPET	
21	EMBOSSED CARDBOARD	
30	PLASTIC	
31	PAINT	
32	METAL	
33	MOULDING	
35	POLYETHYLENE	
36	MYLAR	
38	MOULDED RESIN	
39	CARPET	
40	WOVEN PAPER	

Distribution Drawing Legend Page Appears Following Illustration Section

Codes 464, 465

SCH-434

1962 CHRYSLER SC3-H 4 DOOR HARD TOP IMITATION LEATHER TRIM

MyMopar.com

1962 CHRYSLER - S SERIES

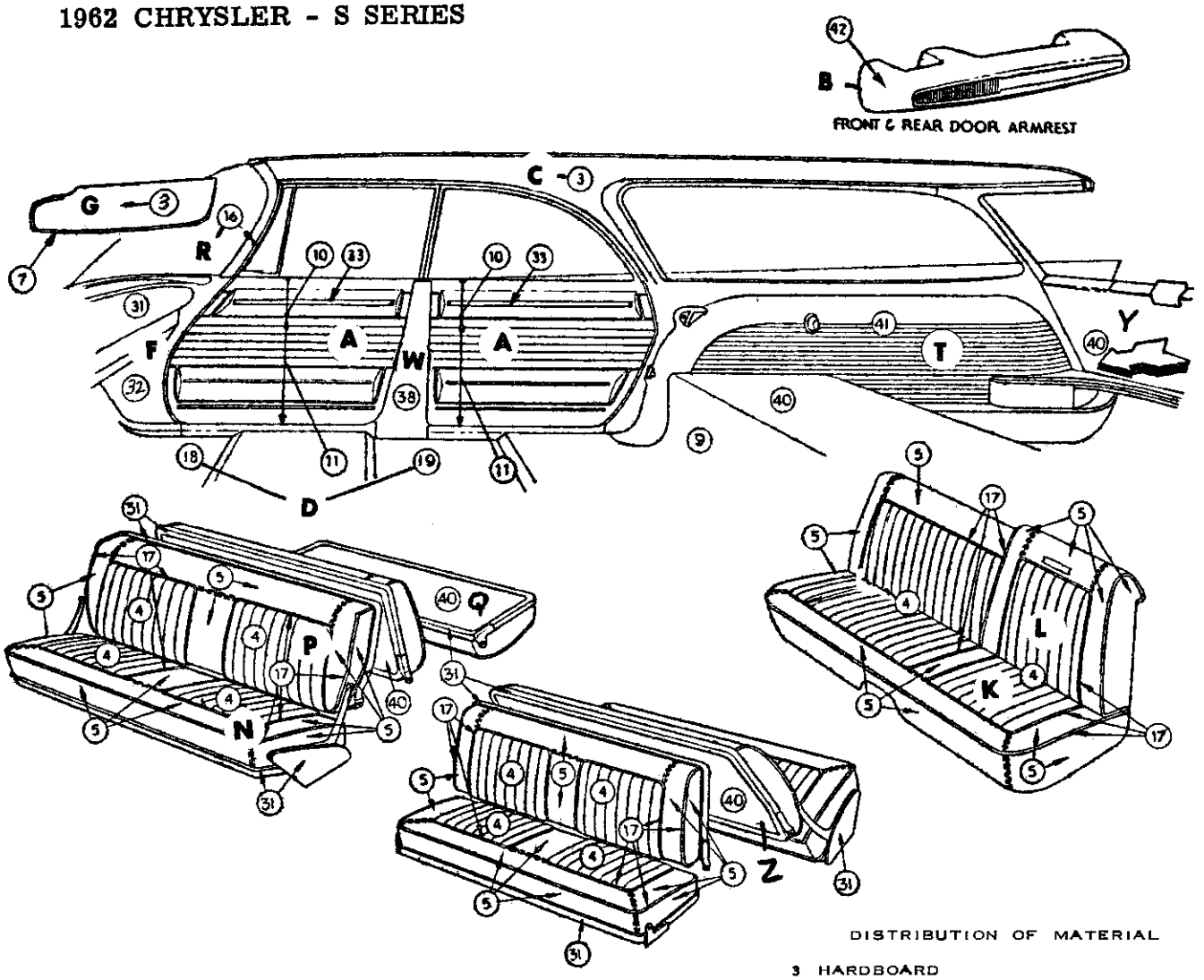

DISTRIBUTION OF MATERIAL

3	HARDBOARD	
4	IMITATION LEATHER	28-AM-46
5	IMITATION LEATHER	28-AM-22
6	IMITATION LEATHER	19-C-22
7	IMITATION LEATHER	19A-C-22
8	IMITATION LEATHER	12-Y-70
9	IMITATION LEATHER	19B-C-22
10	IMITATION LEATHER	19-DJ-22
11	IMITATION LEATHER	.012-L-22
16	LACE	
17	EXTRUDED VINYL	
18	FLOOR COVERING-FRONT-RUBBER	
19	FLOOR COVERING-REAR-RUBBER	
20	FLOOR COVERING-LUGG. COMPT.	
21	EMBOSSED CARDBOARD	
30	PLASTIC	
31	PAINT	
32	METAL	
33	MOULDING	
36	MYLAR	
38	MOULDED RESIN	
39	CARPET	
40	VINOLEUM	
41	MOULDED RUBBER	
42	PLASTISOL	

Distribution Drawing Legend Page Appears Following Illustration Section

Codes 403, 404, 405

SCL-464 1962 CHRYSLER SC1-L 4 DOOR HARD TOP STATION WAGON IMITATION LEATHER TRIM

MyMopar.com

1962 CHRYSLER - S SERIES

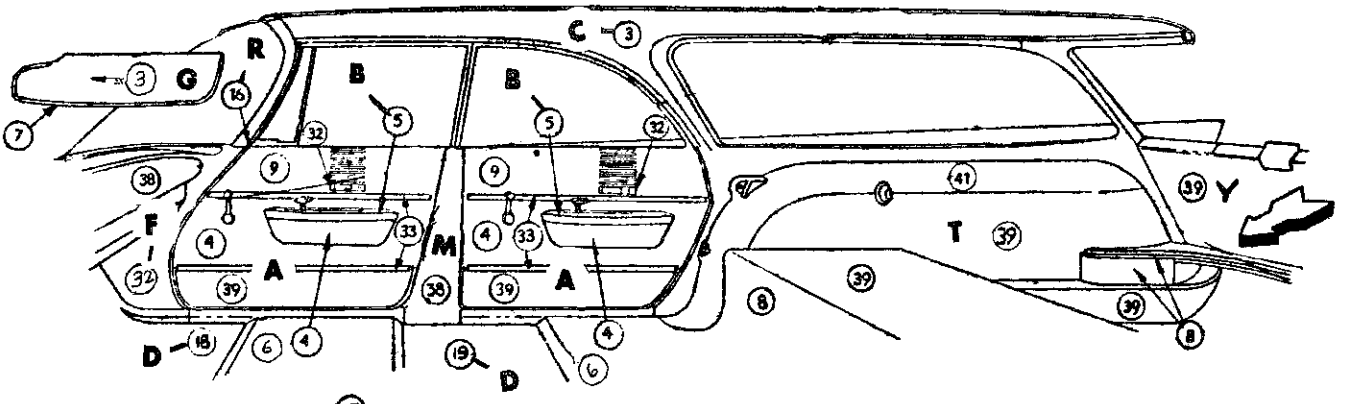

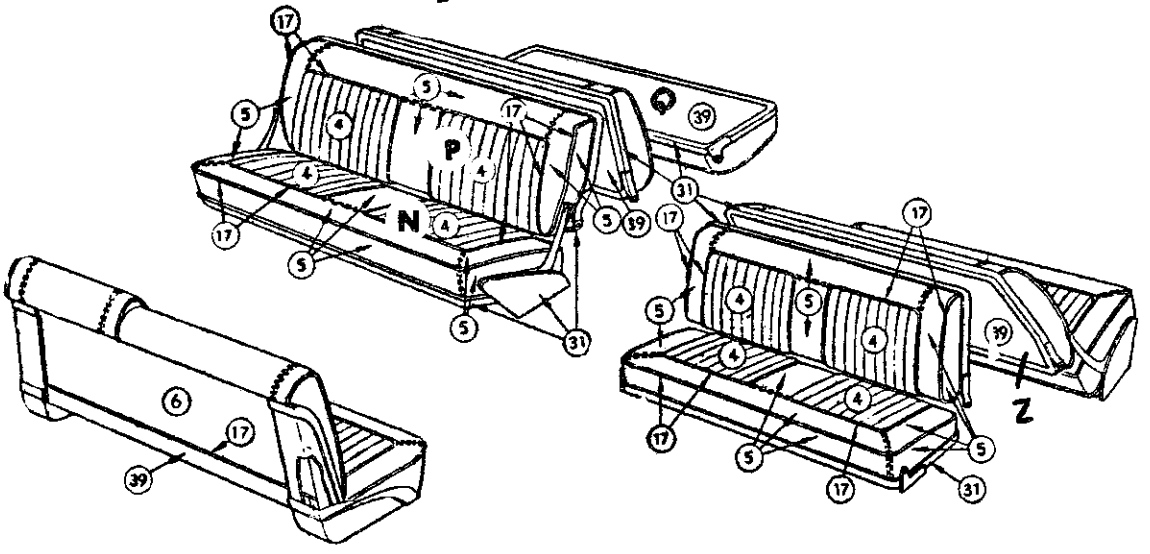

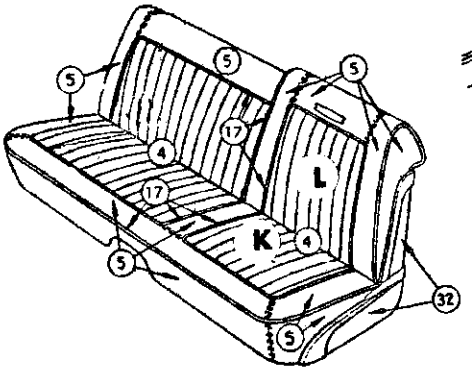

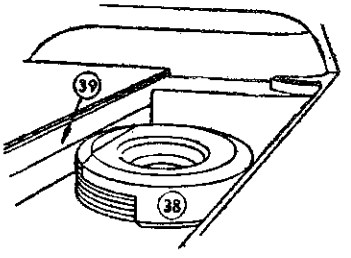

DISTRIBUTION OF MATERIAL

3	HARDBOARD	
4	IMITATION LEATHER	28-AM-46
5	IMITATION LEATHER	28-AM-22
6	IMITATION LEATHER	19-C-22
7	IMITATION LEATHER	19A-C-22
8	IMITATION LEATHER	19B-C-22
9	IMITATION LEATHER	22-AR-22
10	IMITATION LEATHER	12-Y-70
16	LACE	
17	EXTRUDED VINYL	
18	FLOOR COVERING-FRONT-CARPET	
19	FLOOR COVERING-REAR-CARPET	
20	FLOOR COVERING-LUGG. COMPT.	
30	PLASTIC	
31	PAINT	
32	METAL	
33	MOULDING	
36	MYLAR	
38	MOULDED RESIN	
39	CARPET	
41	MOULDED RUBBER	

Distribution Drawing Legend Page Appears Following Illustration Section

Codes 423, 424, 425

SCH-464 1962 CHRYSLER SC3-H 4 DOOR HARD TOP STATION WAGON IMITATION LEATHER TRIM

MyMopar.com

1962 CHRYSLER - S SERIES

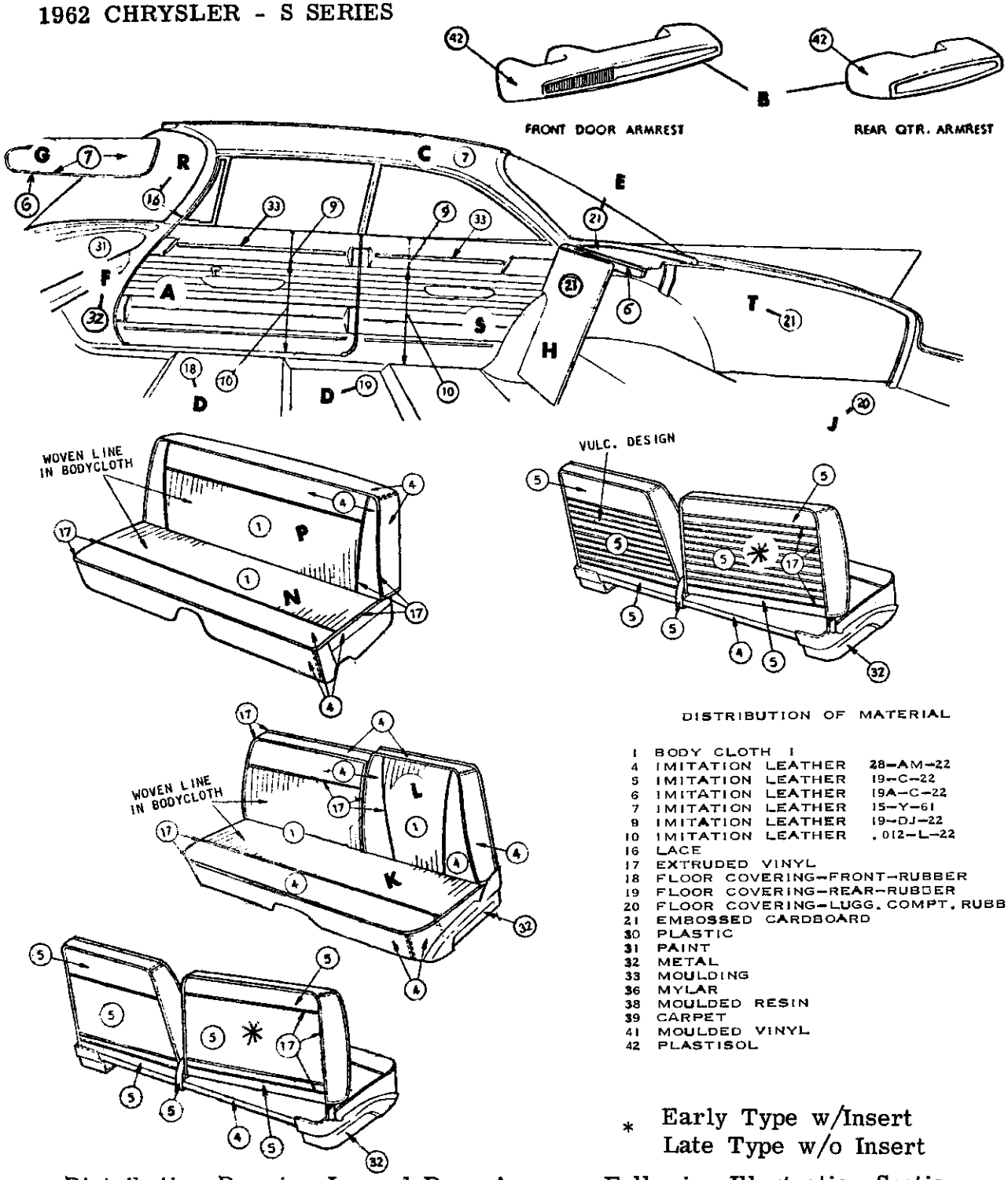

DISTRIBUTION OF MATERIAL

1	BODY CLOTH I	
4	IMITATION LEATHER	28-AM-22
5	IMITATION LEATHER	19-C-22
6	IMITATION LEATHER	19A-C-22
7	IMITATION LEATHER	15-Y-61
9	IMITATION LEATHER	19-DJ-22
10	IMITATION LEATHER	.012-L-22
16	LACE	
17	EXTRUDED VINYL	
18	FLOOR COVERING-FRONT-RUBBER	
19	FLOOR COVERING-REAR-RUBBER	
20	FLOOR COVERING-LUGG. COMPT. RUBBER	
21	EMBOSSED CARDBOARD	
30	PLASTIC	
31	PAINT	
32	METAL	
33	MOULDING	
36	MYLAR	
38	MOULDED RESIN	
39	CARPET	
41	MOULDED VINYL	
42	PLASTISOL	

* Early Type w/Insert
Late Type w/o Insert

Distribution Drawing Legend Page Appears Following Illustration Section

Codes 301, 303, 304, 305

SCL-231 1962 CHRYSLER SC1-L 2 DOOR HARD TOP
CLOTH & IMITATION LEATHER TRIM

MyMopar.com

1962 CHRYSLER - S SERIES

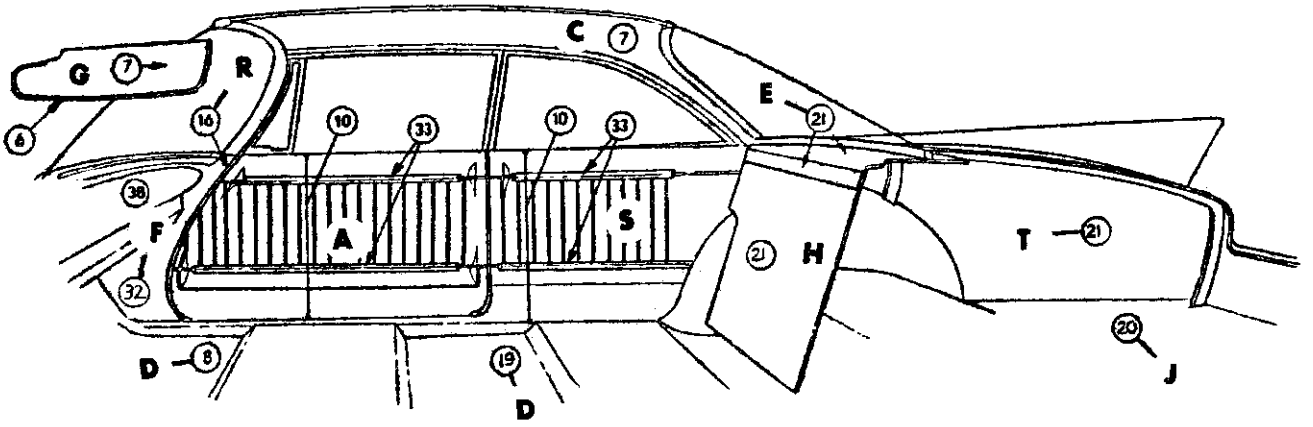

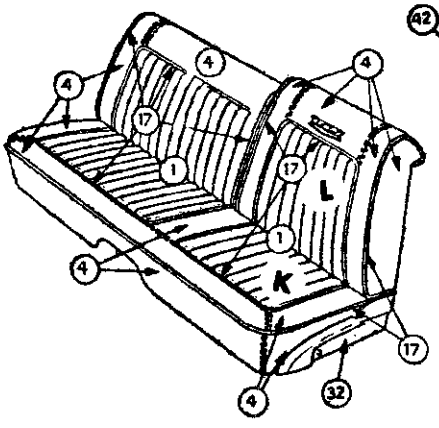

FRONT DOOR ARMREST

REAR QTR. ARMREST

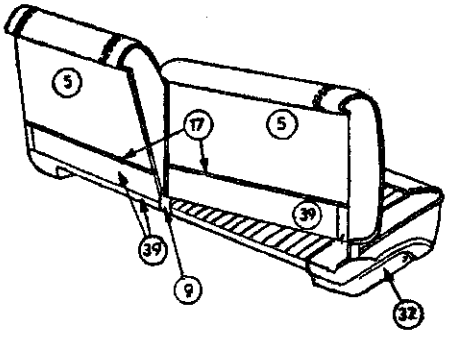

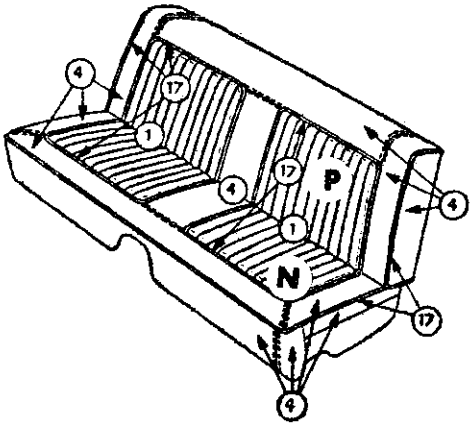

DISTRIBUTION OF MATERIAL

1	BODY CLOTH I	
4	IMITATION LEATHER	28-AM-22
5	IMITATION LEATHER	19-C-22
6	IMITATION LEATHER	19A-C-22
7	IMITATION LEATHER	12-Y-70
9	IMITATION LEATHER	19B-C-22
10	IMITATION LEATHER	19-DJ-22
16	LACE	
17	EXTRUDED VINYL	
18	FLOOR COVERING-FRONT-CARPET	
19	FLOOR COVERING-REAR-CARPET	
20	FLOOR COVERING-LUGG. COMPT. RUBBER	
21	EMBOSSED CARDBOARD	
30	PLASTIC	
31	PAINT	
32	METAL	
33	MOULDING	
36	MYLAR	
38	MOULDED RESIN	
39	CARPET	
42	PLASTISOL	

Distribution Drawing Legend Page Appears Following Illustration Section

Codes 313, 314, 315

SCM-231 **1962 CHRYSLER SC2-M 2 DOOR HARD TOP CLOTH & IMITATION LEATHER COMB.**

MyMopar.com

1962 CHRYSLER - S SERIES

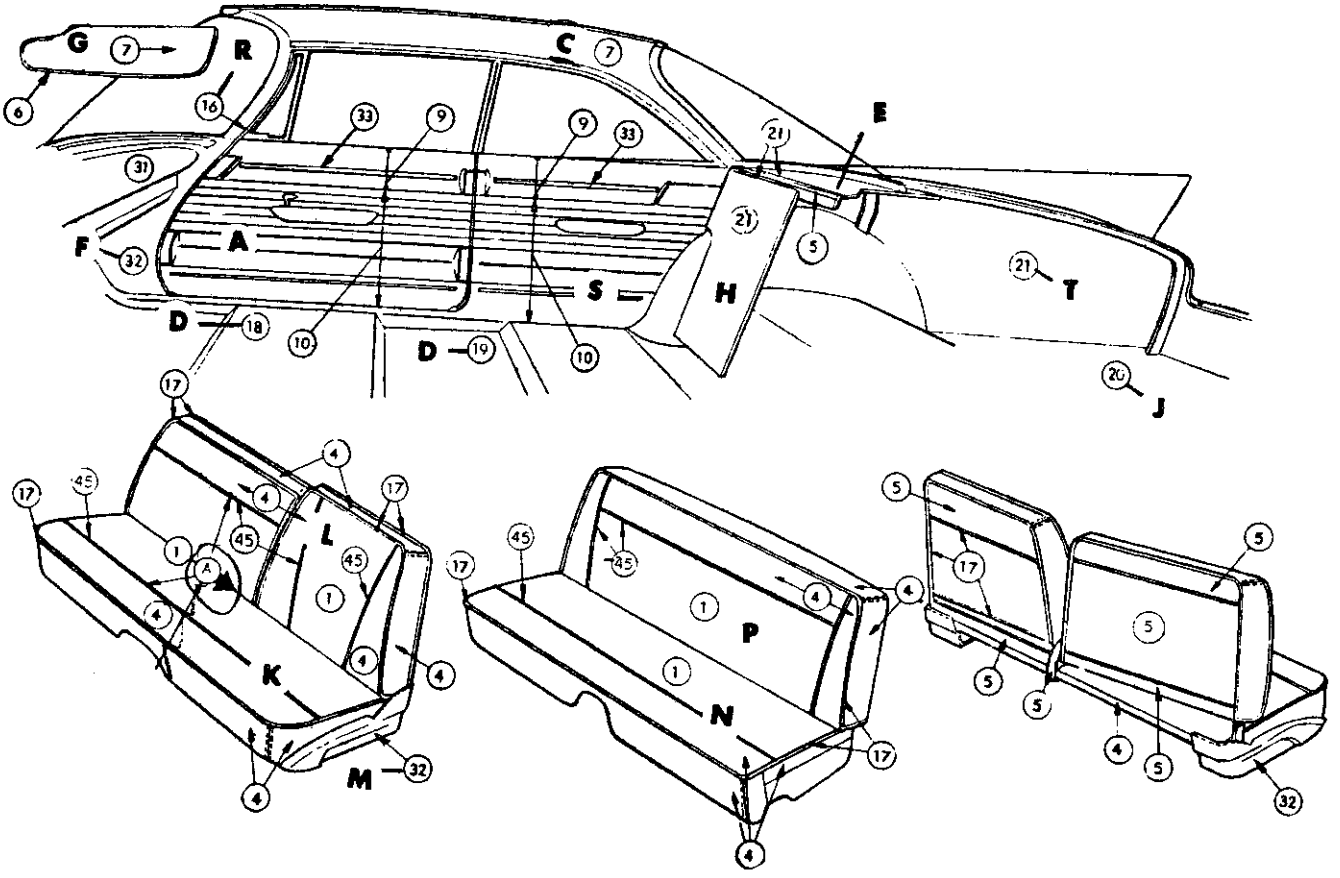

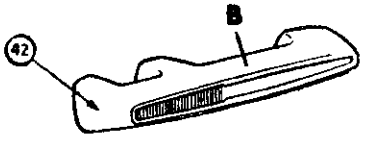

FRONT DOOR ARMREST

REAR QTR. ARMREST

DISTRIBUTION OF MATERIAL

1	BODY CLOTH I	
4	IMITATION LEATHER	28-AM-22
5	IMITATION LEATHER	19-C-22
6	IMITATION LEATHER	19A-C-22
7	IMITATION LEATHER	12-Y-70
9	IMITATION LEATHER	19-DJ-22
10	IMITATION LEATHER	.012-L-22
16	LACE	
17	EXTRUDED VINYL	
18	FLOOR COVERING-FRONT-RUBBER	
19	FLOOR COVERING-REAR-RUBBER	
20	FLOOR COVERING-LUGG. COMPT.-RUBBER	
21	EMBOSSED CARDBOARD	
30	PLASTIC	
31	PAINT	
32	METAL	
33	MOULDING	
35	POLYETHYLENE	
36	MYLAR	
38	MOULDED RESIN	
39	CARPET	
41	MOULDED VINYL	
42	PLASTISOL	
45	MYLAR WELT	

Distribution Drawing Legend Page Appears Following Illustration Section

Codes 341, 343, 344, 345

SCL-231B 1962 CHRYSLER SC1-L 2 DOOR HARD TOP
CLOTH & IMITATION LEATHER TRIM

MyMopar.com

NOTES

MyMopar.com

1962 CHRYSLER - S SERIES

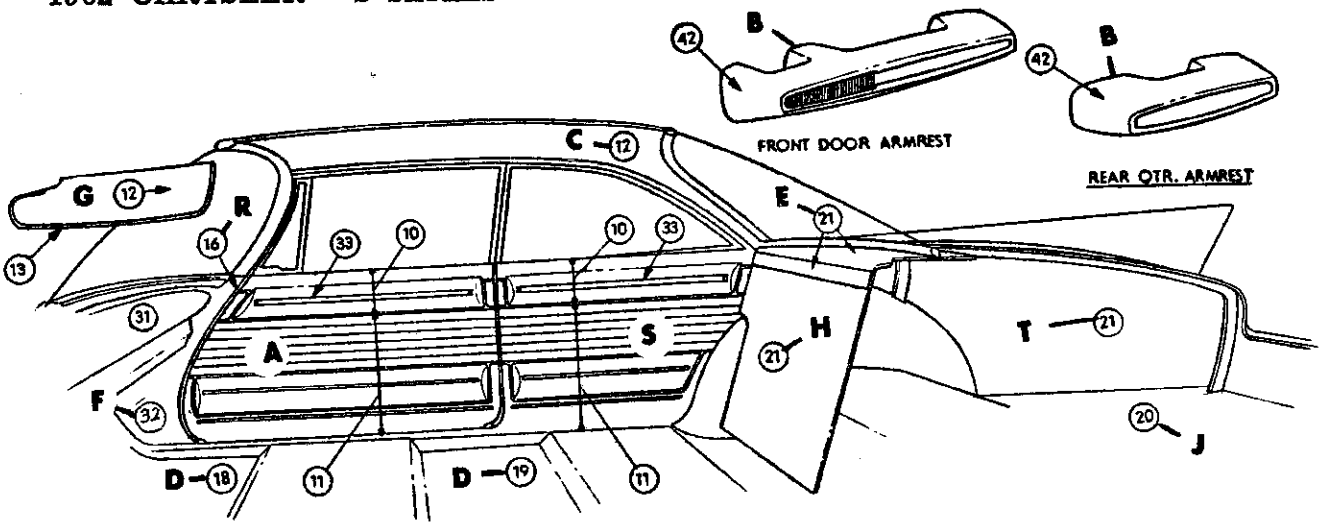

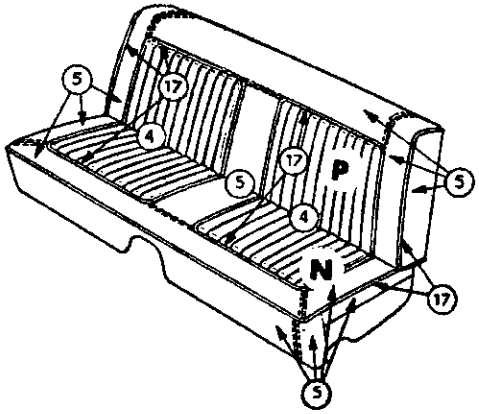

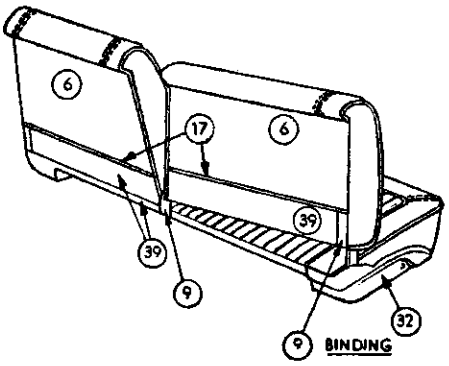

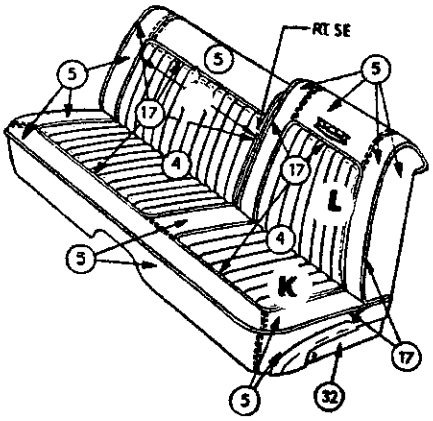

DISTRIBUTION OF MATERIAL

3	HEADLINING	
4	IMITATION LEATHER	28-AM-46
5	IMITATION LEATHER	28-AM-22
6	IMITATION LEATHER	19-C-22
9	IMITATION LEATHER	19B-C-22
10	IMITATION LEATHER	19-DJ-22
11	IMITATION LEATHER	.012-L-22
12	IMITATION LEATHER	12A-Y-70
13	IMITATION LEATHER	19C-C-22
16	LACE	
17	EXTRUDED VINYL	
18	FLOOR COVERING-FRONT-RUBBER	
19	FLOOR COVERING-REAR-RUBBER	
20	FLOOR COVERING-LUGG. COMPT. RUBBER	
21	EMBOSSED CARDBOARD	
30	PLASTIC	
31	PAINT	
32	METAL	
33	MOULDING	
35	POLYETHYLENE	
36	MYLAR	
38	MOULDED RESIN	
39	CARPET	
42	PLASTISOL	

Distribution Drawing Legend Page Appears Following Illustration Section

Codes 404, 405

SCL-234 **1962 CHRYSLER SC1-L 2 DOOR HARD TOP IMITATION LEATHER TRIM**

MyMopar.com

1962 CHRYSLER - S SERIES

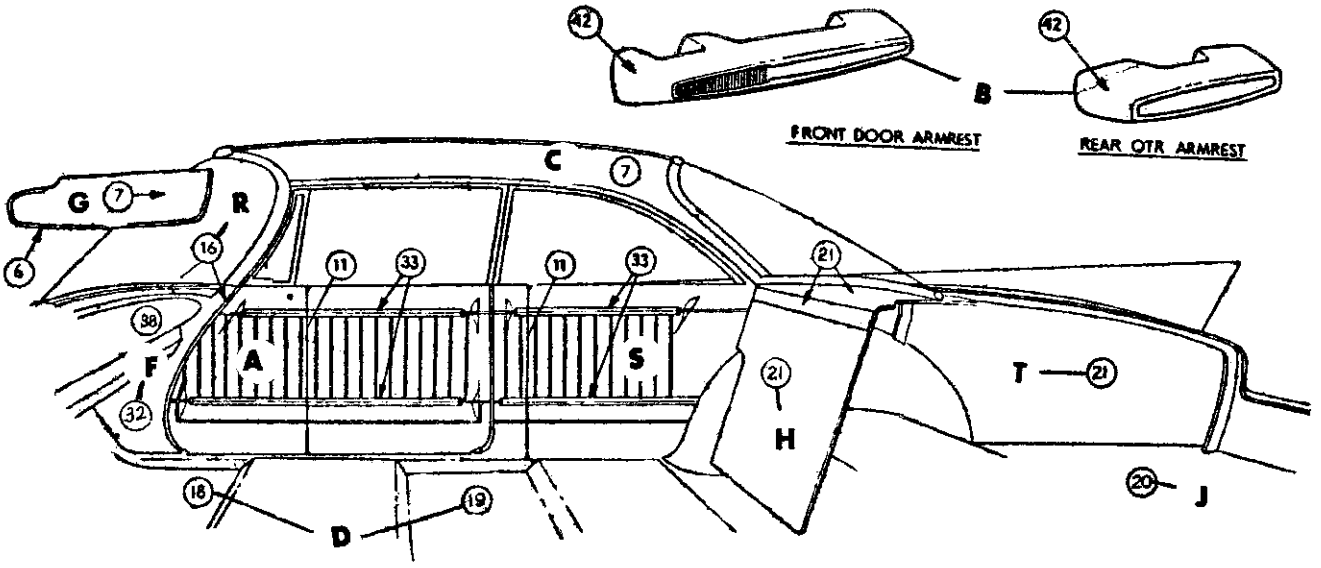

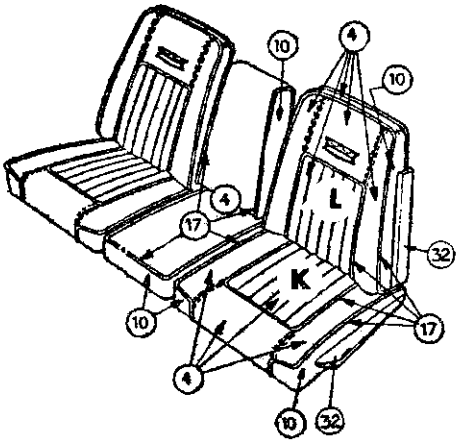

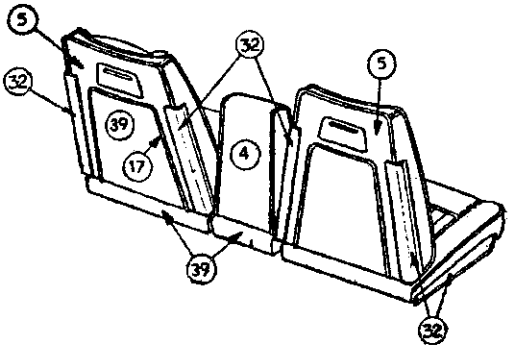

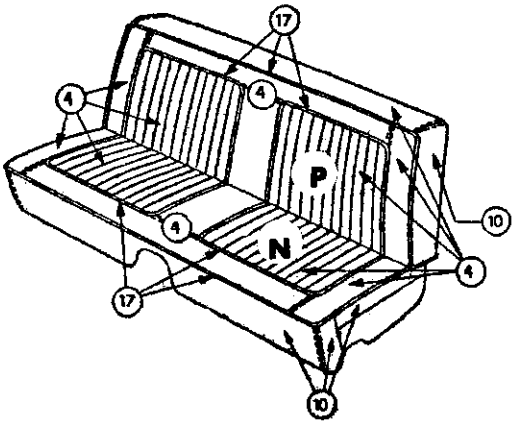

DISTRIBUTION OF MATERIAL

4	LEATHER	
5	IMITATION LEATHER	19-C-22
6	IMITATION LEATHER	19A-C-22
7	IMITATION LEATHER	12-Y-70
9	IMITATION LEATHER	19B-C-22
10	IMITATION LEATHER	28-AM-22
11	IMITATION LEATHER	19-DJ-22
16	LACE	
17	EXTRUDED VINYL	
18	FLOOR COVERING-FRONT-CARPET	
19	FLOOR COVERING-REAR-CARPET	
20	FLOOR COVERING-LUGG. COMPT. RUBBER	
21	EMBOSSED CARDBOARD	
30	PLASTIC	
31	PAINT	
32	METAL	
33	MOULDING	
35	POLYETHYLENE	
36	MYLAR	
38	MOULDED RESIN	
39	CARPET	
42	PLASTISOL	

Distribution Drawing Legend Page Appears Following Illustration Section

Codes 453, 454, 455

SCM-233 **1962 CHRYSLER SC2-M 2 DOOR HARD TOP LEATHER TRIM**

MyMopar.com

1962 CHRYSLER - S SERIES

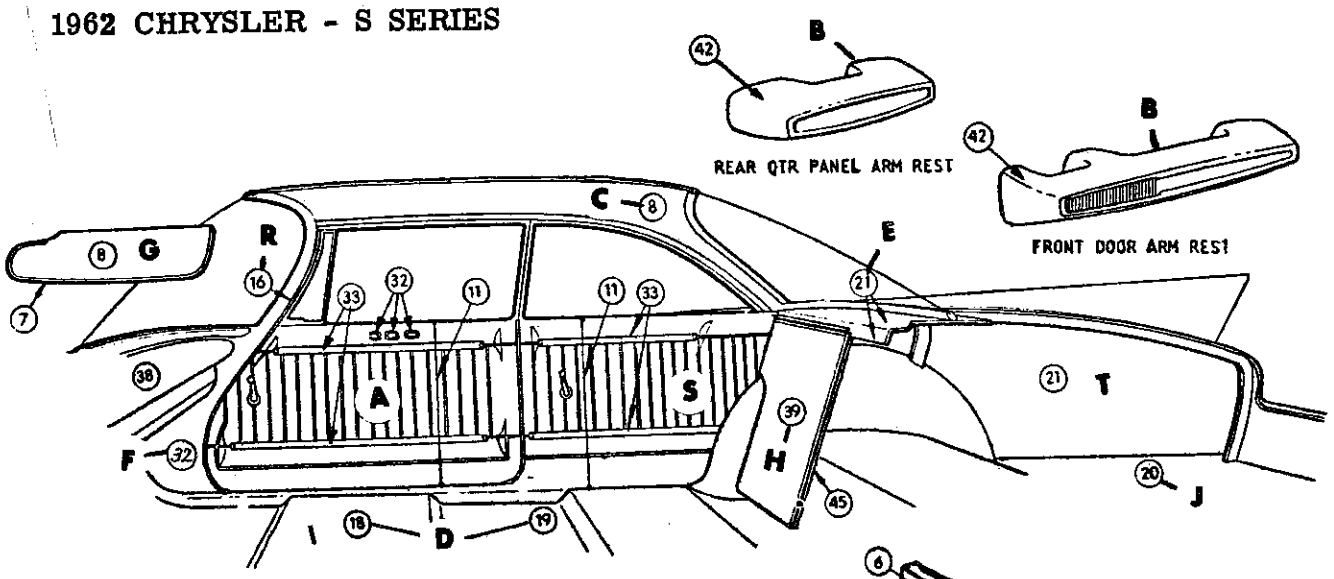

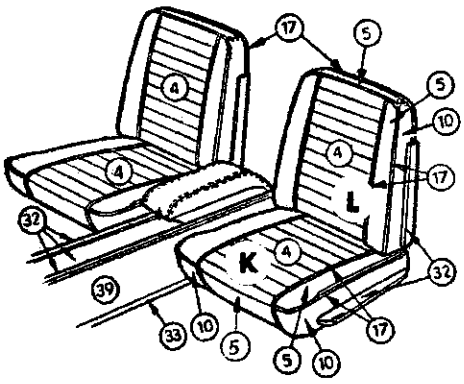

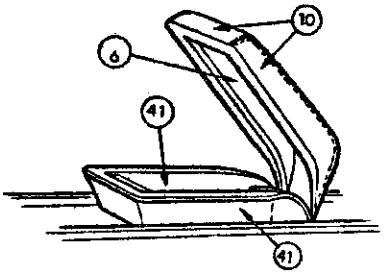

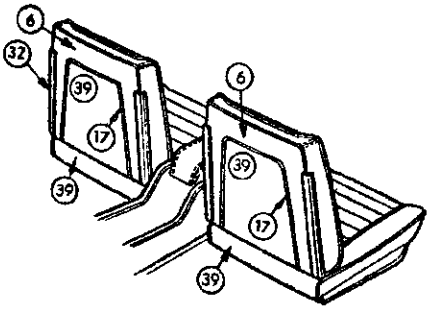

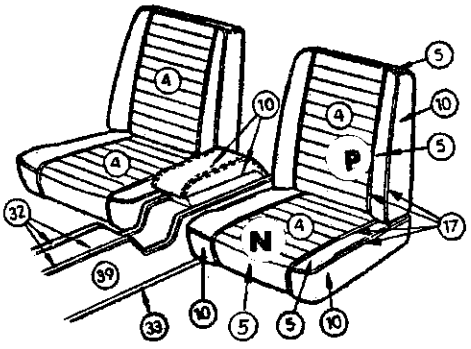

DISTRIBUTION OF MATERIAL

3	HEADLINING	
4	LEATHER 1	
5	LEATHER 2	
6	IMITATION LEATHER	19-C-22
7	IMITATION LEATHER	19A-C-22
8	IMITATION LEATHER	12-Y-70
9	IMITATION LEATHER	19B-C-22
10	IMITATION LEATHER	28-AM-22
11	IMITATION LEATHER	19-DJ-22
16	LACE	
17	EXTRUDED VINYL	
18	FLOOR COVERING-FRONT-CARPET	
19	FLOOR COVERING-REAR-CARPET	
20	FLOOR COVERING-LUGG. COMPT. RUBBER	
30	PLASTIC	
31	PAINT	
32	METAL	
33	MOULDING	
35	POLYETHYLENE	
36	MYLAR	
38	MOULDED RESIN	
39	CARPET	
41	FAN FLOCK	
42	PLASTISOL	
45	MASONITE	

Distribution Drawing Legend Page Appears Following Illustration Section

Code 463

SCM-233A 1962 CHRYSLER SC2-M (300H) SPECIAL CLUB COUPE LEATHER TRIM

MyMopar.com

1962 CHRYSLER - S SERIES

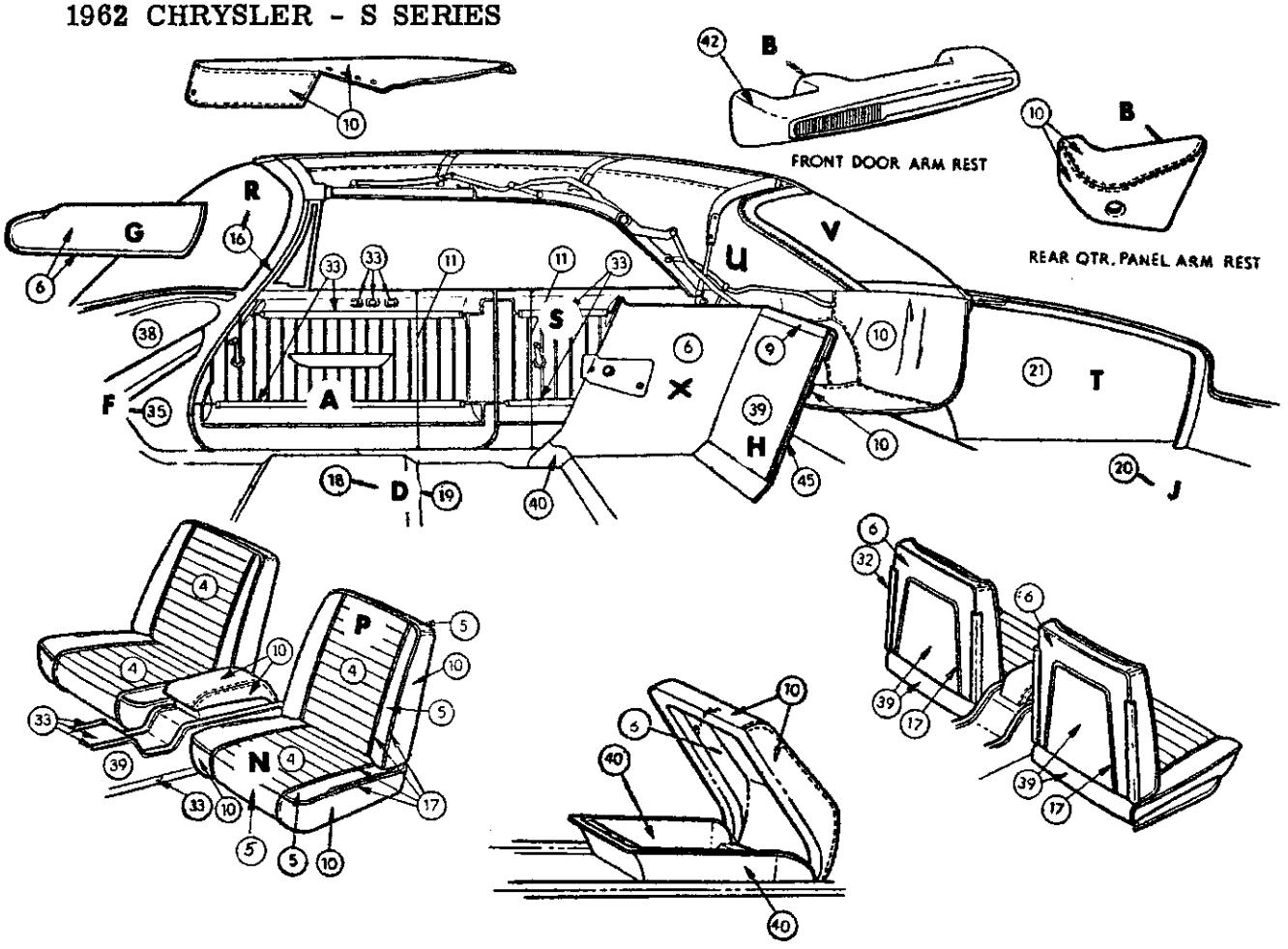

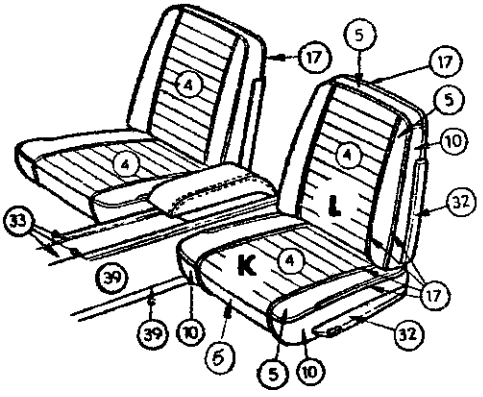

DISTRIBUTION OF MATERIAL

3	HEADLINING	
4	LEATHER 1	
5	LEATHER 2	
6	IMITATION LEATHER	19-C-22
9	IMITATION LEATHER	19B-C-22
10	IMITATION LEATHER	28-AM-22
11	IMITATION LEATHER	19-DJ-22
16	LACE	
17	EXTRUDED VINYL	
18	FLOOR COVERING-FRONT-CARPET	
19	FLOOR COVERING-REAR-CARPET	
20	FLOOR COVERING-LUGG. COMPT. RUBBER	
21	EMBOSSED CARDBOARD	
26	FELT	
30	PLASTIC	
31	PAINT	
32	METAL	
33	MOULDING	
35	POLYETHYLENE	
36	MYLAR	
38	MOULDED RESIN	
39	CARPET	
40	FAN FLOCK	
42	PLASTISOL	
45	PLYWOOD	

Distribution Drawing Legend Page Appears Following Illustration Section

Code 463

SCM-273A 1962 CHRYSLER SC2-M (300H) CONVERTIBLE COUPE LEATHER TRIM

MyMopar.com

1962 CHRYSLER - S SERIES

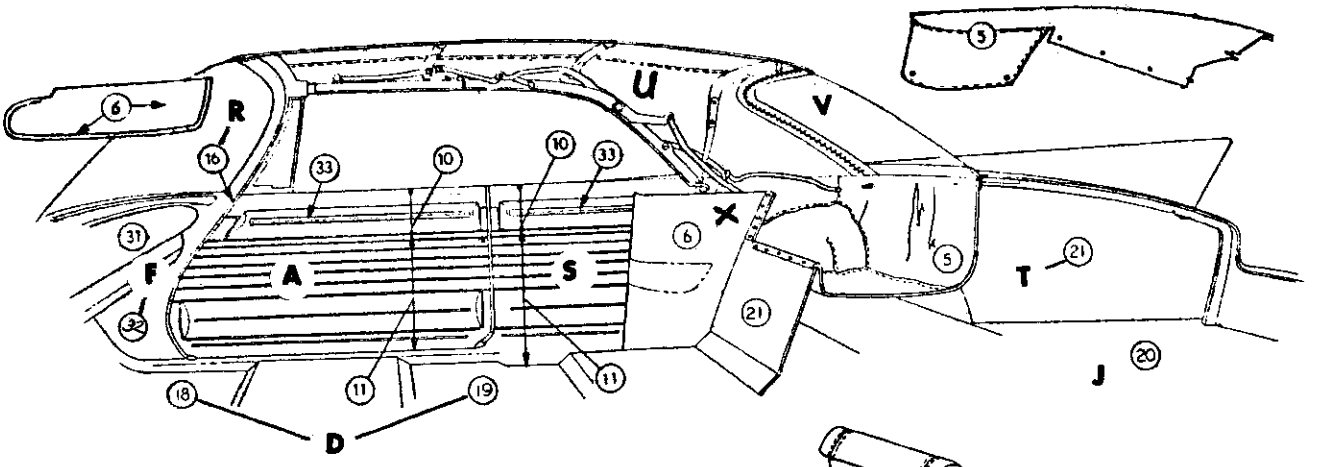

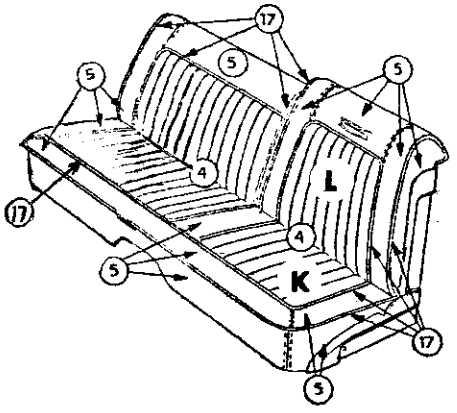

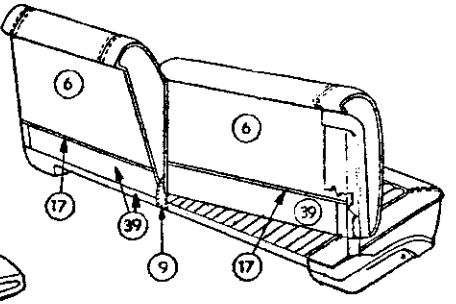

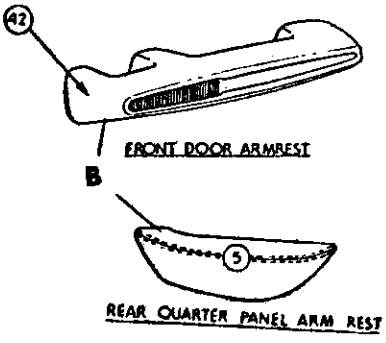

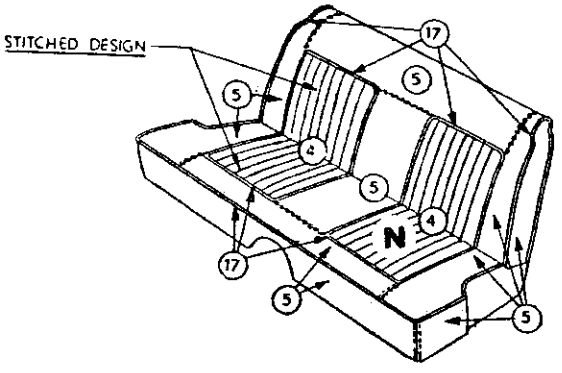

DISTRIBUTION OF MATERIAL

4	IMITATION LEATHER	28-AM-46
5	IMITATION LEATHER	28-AM-22
6	IMITATION LEATHER	19-C-22
9	IMITATION LEATHER	19B-C-22
10	IMITATION LEATHER	19-DJ-22
11	IMITATION LEATHER	.012-L-22
16	LACE	
17	EXTRUDED VINYL	
18	FLOOR COVERING-FRONT-RUBBER	
19	FLOOR COVERING-REAR-RUBBER	
20	FLOOR COVERING-LUGG. COMPT. RUBBER	
21	EMBOSSED CARDBOARD	
30	PLASTIC	
31	PAINT	
32	METAL	
33	MOULDING	
35	POLYETHYLENE	
36	MYLAR	
38	MOULDED RESIN	
39	CARPET	
42	PLASTISOL	

Distribution Drawing Legend Page Appears Following Illustration Section

Codes 401, 404, 405

SCL-274 **1962 CHRYSLER SC1-L CONVERTIBLE COUPE**
IMITATION LEATHER TRIM

MyMopar.com

1962 CHRYSLER - S SERIES

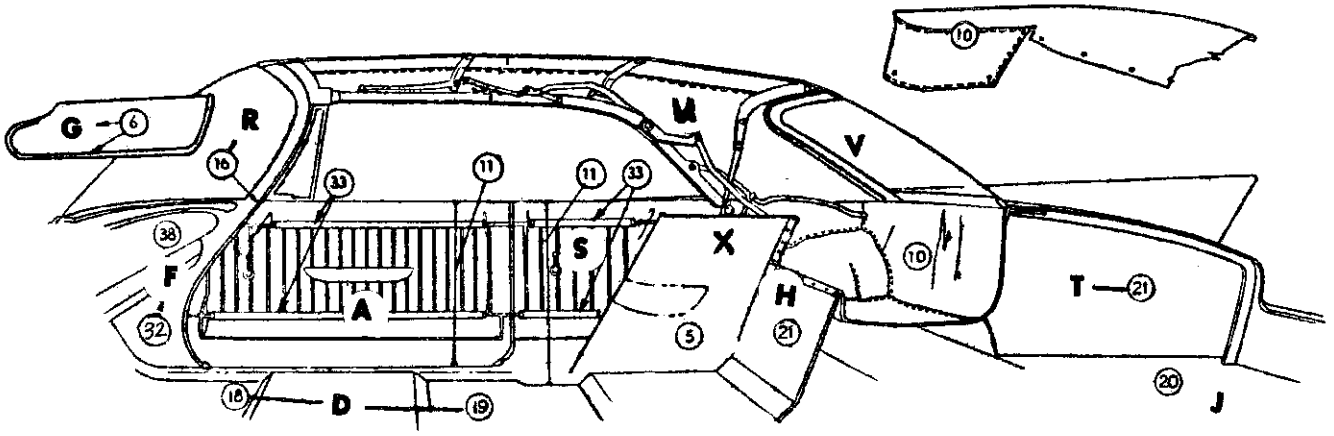

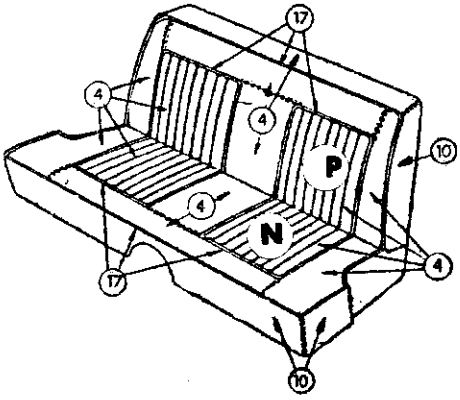

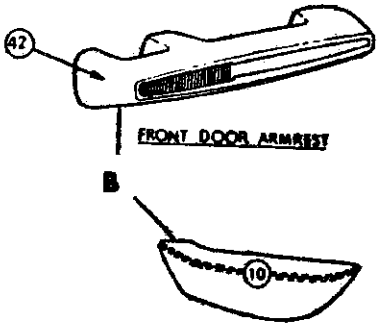

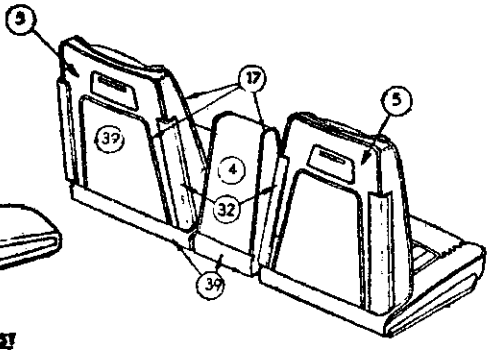

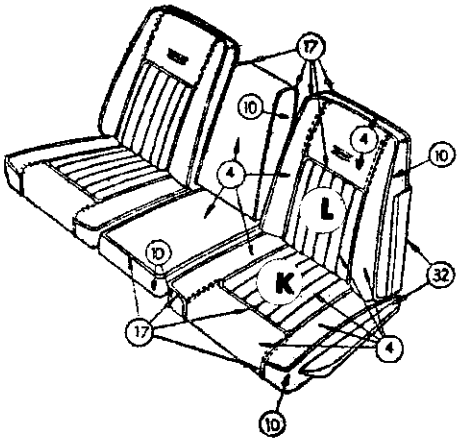

DISTRIBUTION OF MATERIAL

4	LEATHER	
5	IMITATION LEATHER	19-C-22
6	IMITATION LEATHER	19A-C-22
9	IMITATION LEATHER	19B-C-22
10	IMITATION LEATHER	28-AM-22
11	IMITATION LEATHER	19-DJ-22
16	LACE	
17	EXTRUDED VINYL	
18	FLOOR COVERING-FRONT-CARPET	
19	FLOOR COVERING-REAR-CARPET	
20	FLOOR COVERING-LUGG. COMPT. RUBBER	
21	EMBOSSED CARDBOARD	
30	PLASTIC	
31	PAINT	
32	METAL	
33	MOULDING	
35	POLYETHYLENE	
36	MYLAR	
38	MOULDED RESIN	
39	CARPET	
42	PLASTISOL	

Distribution Drawing Legend Page Appears Following Illustration Section

Codes 453, 454, 455

SCM-273 **1962 CHRYSLER SC2-M CONVERTIBLE COUPE LEATHER TRIM**

MyMopar.com

1962 CHRYSLER AND IMPERIAL - S SERIES

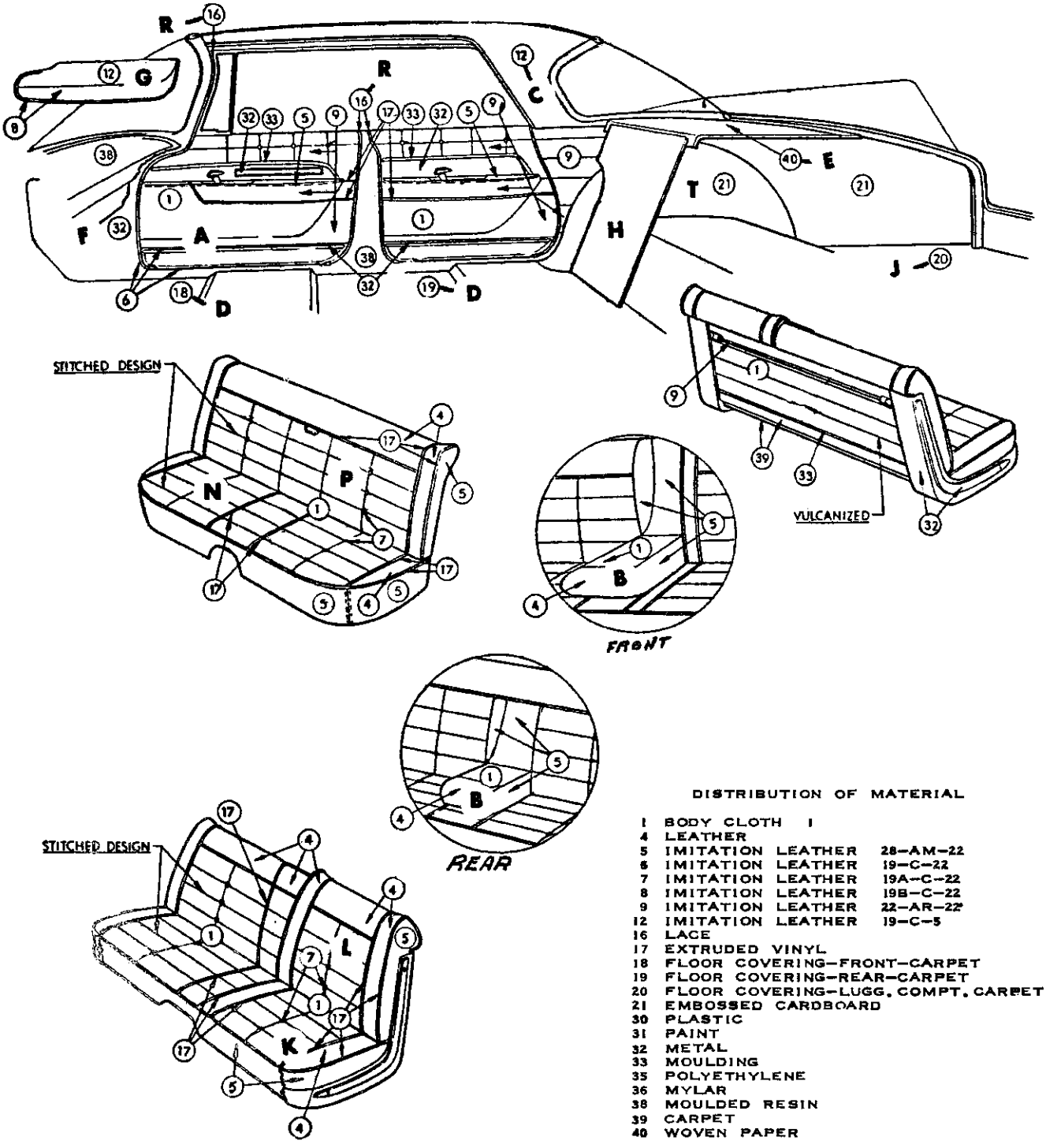

DISTRIBUTION OF MATERIAL

1	BODY CLOTH 1	
4	LEATHER	
5	IMITATION LEATHER	28-AM-22
6	IMITATION LEATHER	19-C-22
7	IMITATION LEATHER	19A-C-22
8	IMITATION LEATHER	19B-C-22
9	IMITATION LEATHER	22-AR-22
12	IMITATION LEATHER	19-C-5
16	LACE	
17	EXTRUDED VINYL	
18	FLOOR COVERING-FRONT-CARPET	
19	FLOOR COVERING-REAR-CARPET	
20	FLOOR COVERING-LUGG. COMPT. CARPET	
21	EMBOSSED CARDBOARD	
30	PLASTIC	
31	PAINT	
32	METAL	
33	MOULDING	
35	POLYETHYLENE	
36	MYLAR	
38	MOULDED RESIN	
39	CARPET	
40	WOVEN PAPER	

Distribution Drawing Legend Page Appears Following Illustration Section

Codes 521, 522, 523, 524

SYH-435 1962 IMPERIAL SY1-H SPECIAL 4 DOOR SEDAN
CLOTH AND LEATHER TRIM

MyMopar.com

1962 CHRYSLER AND IMPERIAL - S SERIES

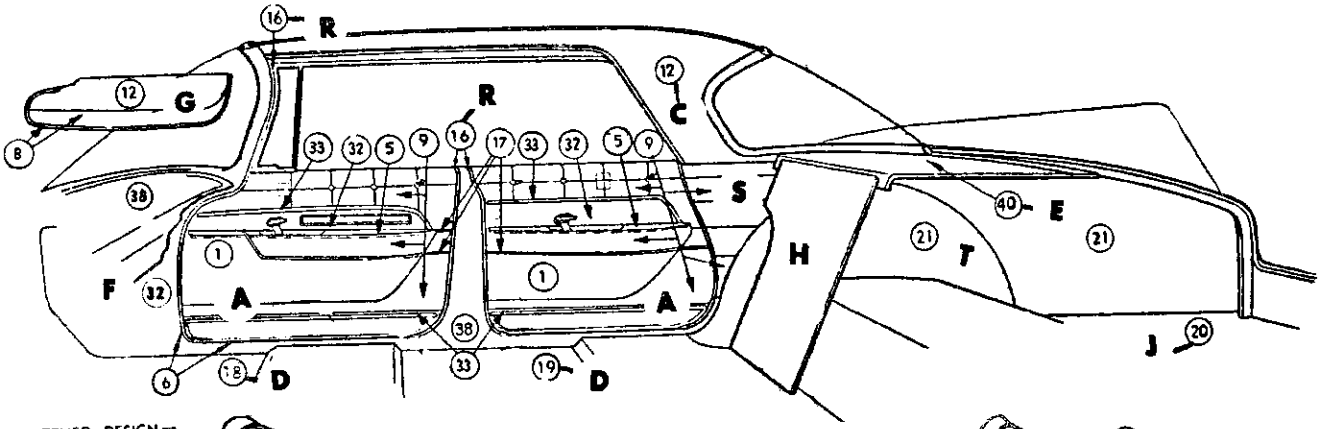

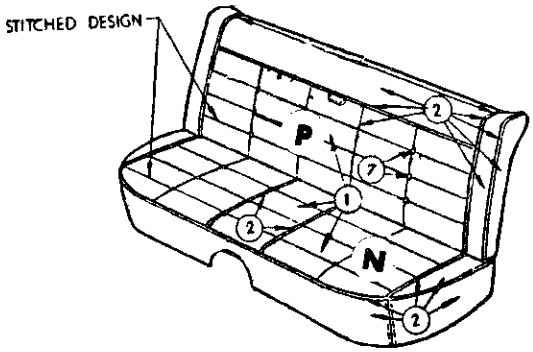

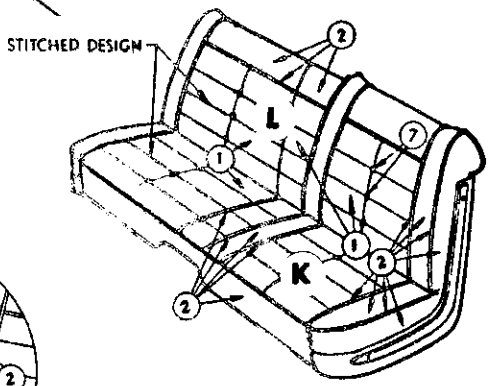

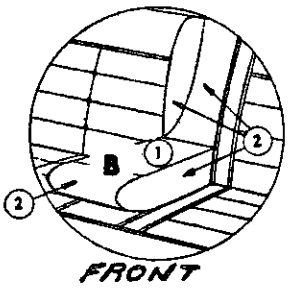

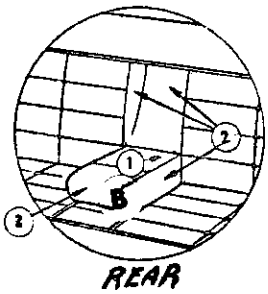

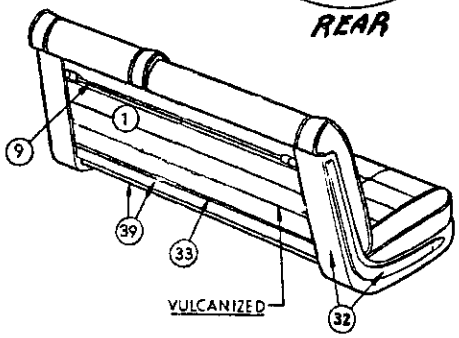

DISTRIBUTION OF MATERIAL

1	BODY CLOTH 1	
2	BODY CLOTH 2	
5	IMITATION LEATHER	28-AM-22
6	IMITATION LEATHER	19-C-22
7	IMITATION LEATHER	19A-C-22
8	IMITATION LEATHER	19B-C-22
9	IMITATION LEATHER	22-AR-22
12	IMITATION LEATHER	19-C-5
17	EXTRUDED VINYL	
18	FLOOR COVERING-FRONT-CARPET	
19	FLOOR COVERING-REAR-CARPET	
20	FLOOR COVERING-LUGG. COMPT. CARPET	
21	EMBOSSED CARDBOARD	
30	PLASTIC	
31	PAINT	
32	METAL	
33	MOULDING	
35	POLYETHYLENE	
36	MYLAR	
38	MOULDED RESIN	
39	CARPET	
40	WOVEN PAPER	

Distribution Drawing Legend Page Appears Following Illustration Section

Code 534

SYH-432 1962 IMPERIAL SY1-H SPECIAL 4 DOOR SEDAN CLOTH TRIM

MyMopar.com

1962 CHRYSLER AND IMPERIAL - S SERIES

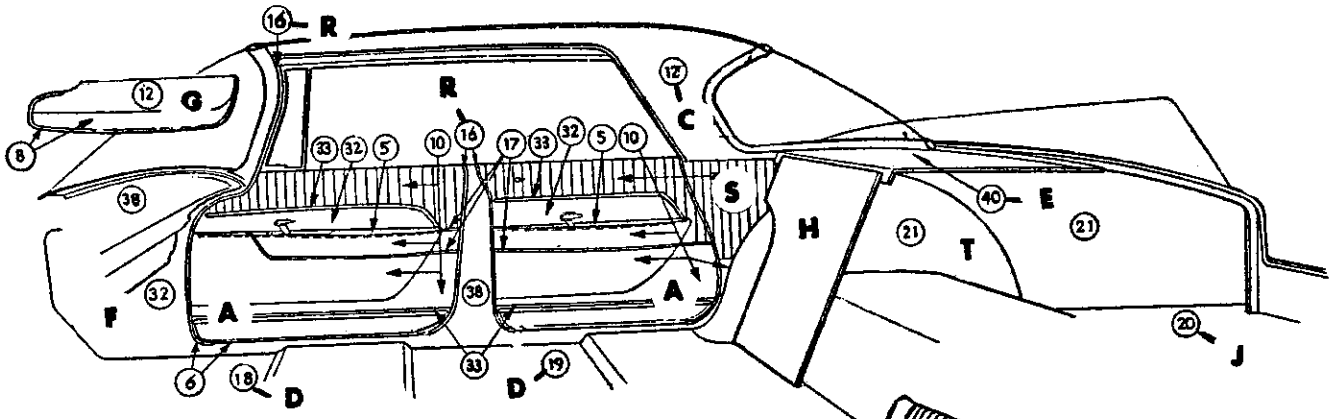

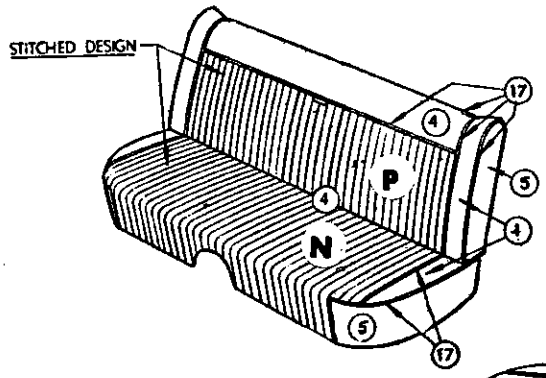

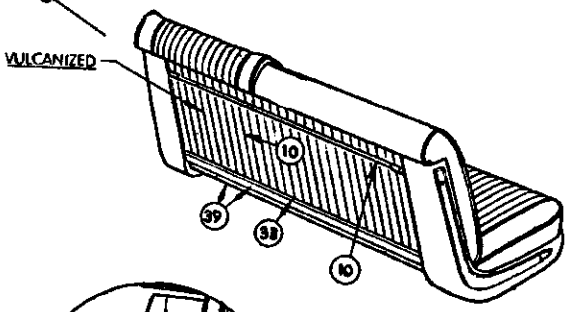

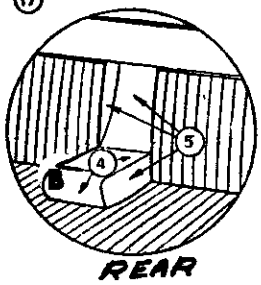

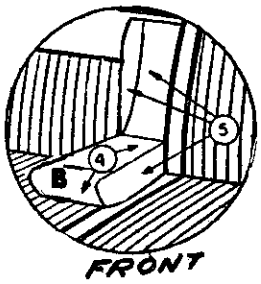

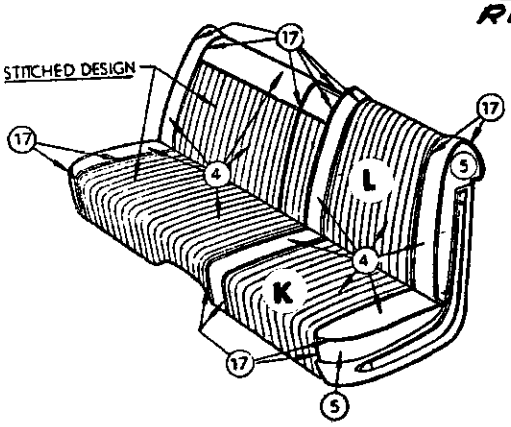

DISTRIBUTION OF MATERIAL

4	LEATHER	
5	IMITATION LEATHER	28-AM-22
6	IMITATION LEATHER	19-C-22
8	IMITATION LEATHER	19B-C-22
10	IMITATION LEATHER	22-AR-22
12	IMITATION LEATHER	19-C-5
17	EXTRUDED VINYL	
18	FLOOR COVERING-FRONT-CARPET	
19	FLOOR COVERING-REAR-CARPET	
20	FLOOR COVERING-LUGG. COMPT. CARPET	
21	EMBOSSED CARDBOARD	
30	PLASTIC	
31	PAINT	
32	METAL	
33	MOULDING	
35	POLYETHYLENE	
36	MYLAR	
38	MOULDED RESIN	
39	CARPET	
40	WOVEN PAPER	

Distribution Drawing Legend Page Appears Following Illustration Section

Codes 553, 555, 556, 557

SYM-433 1962 IMPERIAL SY1-M SPECIAL 4 DOOR SEDAN
LEATHER TRIM

MyMopar.com

1962 CHRYSLER AND IMPERIAL - S SERIES

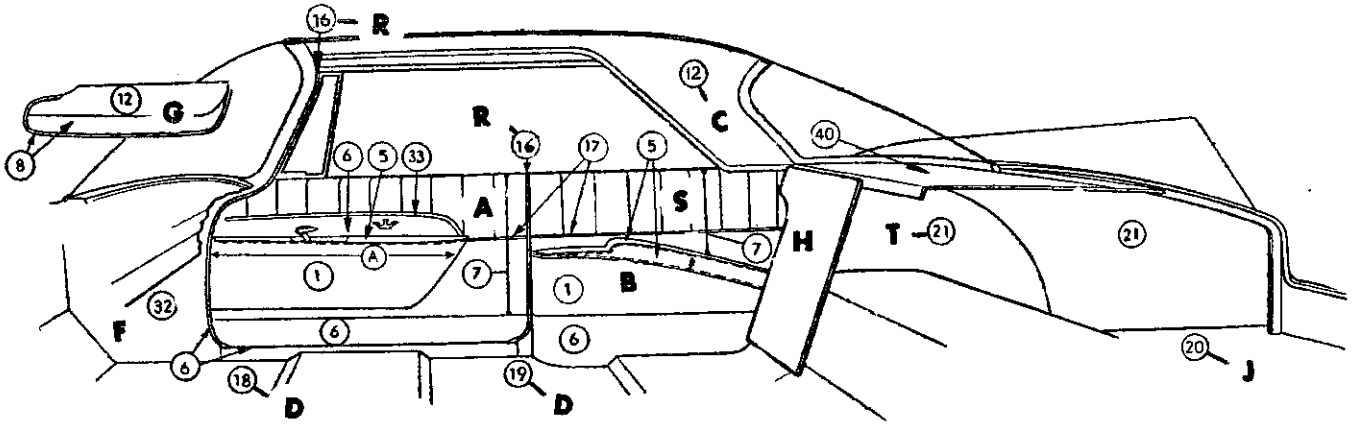

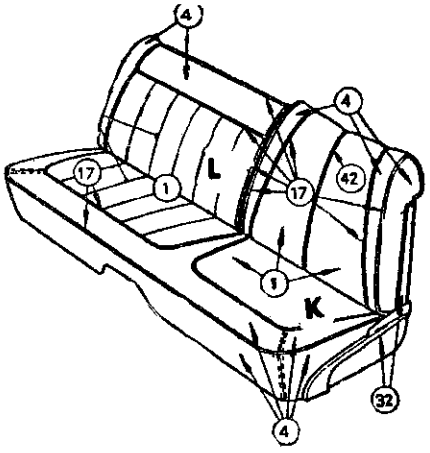

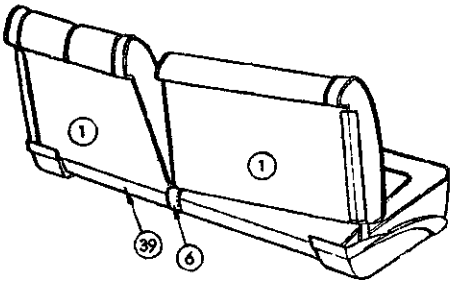

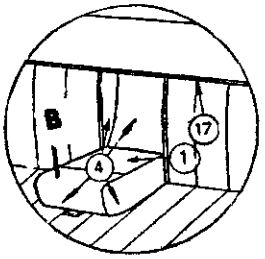

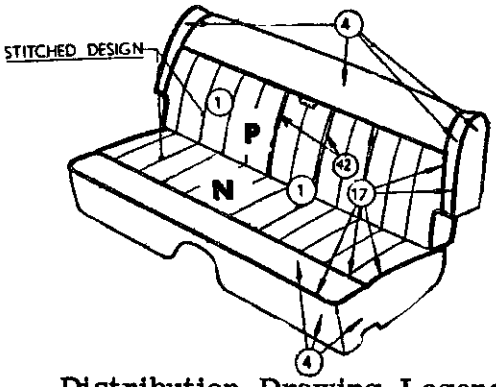

DISTRIBUTION OF MATERIAL

1	BODY CLOTH	1
4	IMITATION LEATHER	28-AM-22
5	IMITATION LEATHER	28A-AM-22
6	IMITATION LEATHER	19-C-22
7	IMITATION LEATHER	22-AR-22
8	IMITATION LEATHER	19B-C-22
12	IMITATION LEATHER	19-C-5
17	EXTRUDED VINYL WELT NO. 1	
18	FLOOR COVERING-FRONT-CARPET	
19	FLOOR COVERING-REAR-CARPET	
20	FLOOR COVERING-LUGG. COMPT. CARPET	
21	EMBOSSED CARDBOARD	
30	PLASTIC	
31	PAINT	
32	METAL	
33	MOULDING	
35	POLYETHYLENE	
36	MYLAR	
38	MOULDED RESIN	
39	CARPET	
40	WOVEN PAPER	
42	EXTRUDED VINYL WELT NO. 2	

Distribution Drawing Legend Page Appears Following Illustration Section

Codes 501, 502, 503, 504

SYL-231 1962 IMPERIAL SY1-L SPECIAL CLUB COUPE
CLOTH AND IMITATION LEATHER COMBINATION

MyMopar.com

1962 CHRYSLER AND IMPERIAL - S SERIES

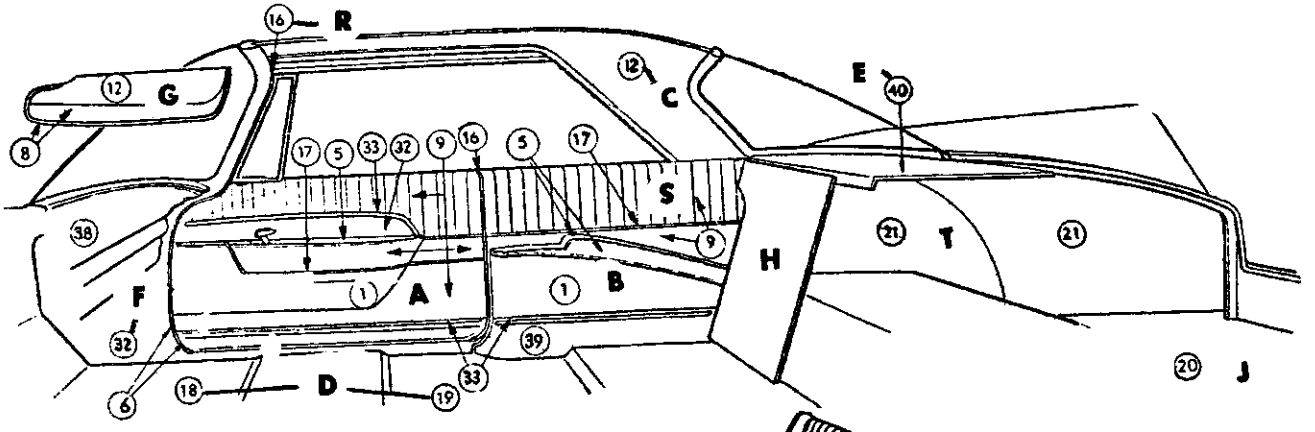

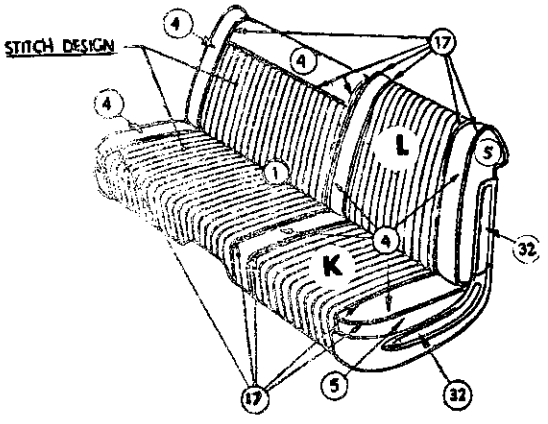

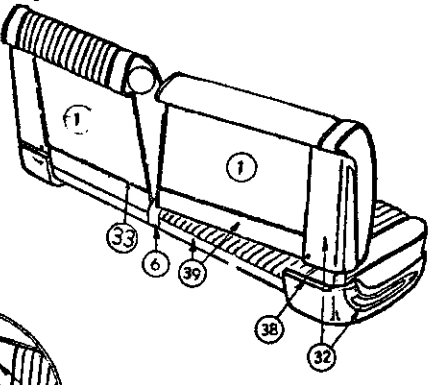

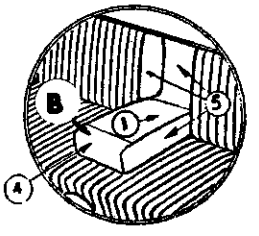

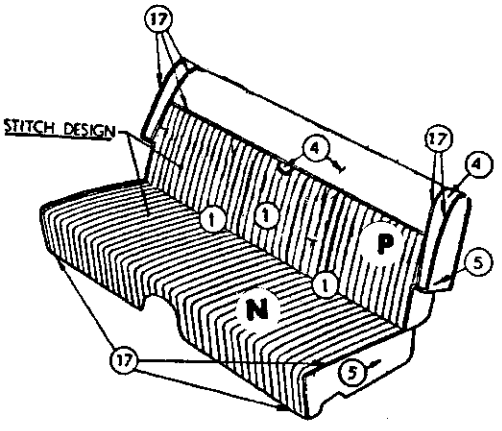

DISTRIBUTION OF MATERIAL

1	BODY CLOTH 1
4	LEATHER
5	IMITATION LEATHER 28-AM-22
6	IMITATION LEATHER 19-C-22
8	IMITATION LEATHER 19B-C-22
9	IMITATION LEATHER 22-AR-22
12	IMITATION LEATHER 19-C-5
17	EXTRUDED VINYL
18	FLOOR COVERING-FRONT-CARPET
19	FLOOR COVERING-REAR-CARPET
20	FLOOR COVERING-LUGG. COMPT. CARPET
21	EMBOSSED CARDBOARD
30	PLASTIC
31	PAINT
32	METAL
33	MOULDING
35	POLYETHYLENE
36	MYLAR
38	MOULDED RESIN
39	CARPET
40	WOVEN PAPER

Distribution Drawing Legend Page Appears Following Illustration Section

Codes 511, 512, 513, 514, 515, 516

SYM-235 1962 IMPERIAL SY1-M SPECIAL CLUB COUPE
CLOTH AND LEATHER COMBINATION

MyMopar.com

1962 CHRYSLER AND IMPERIAL - S SERIES

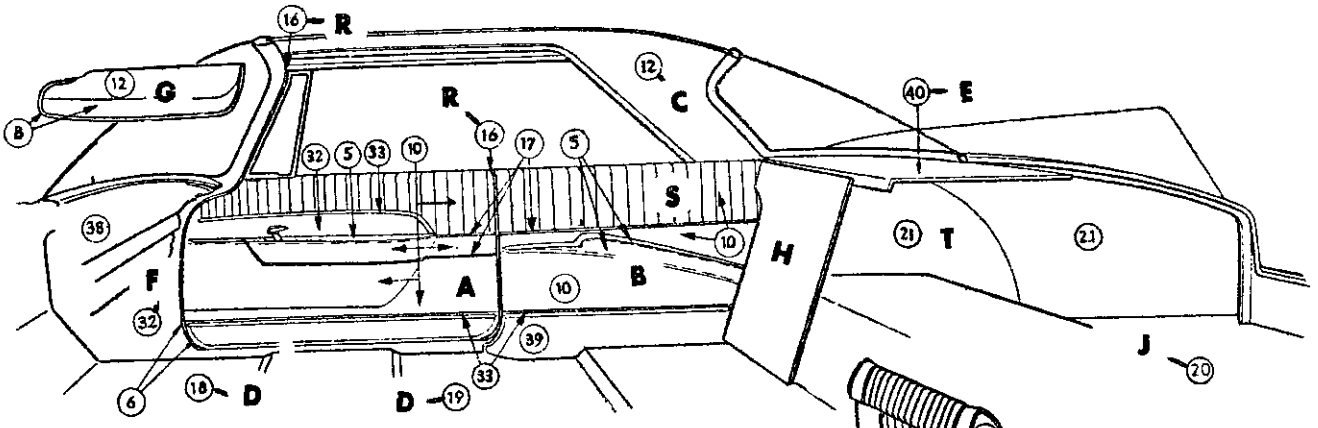

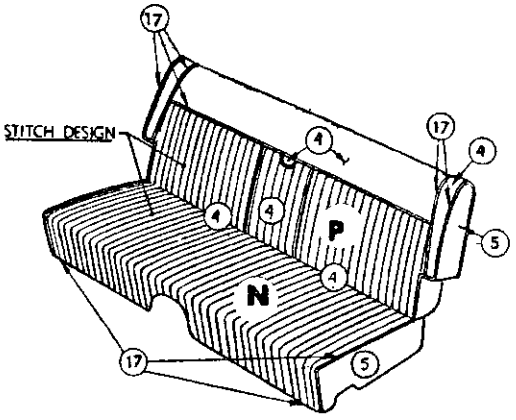

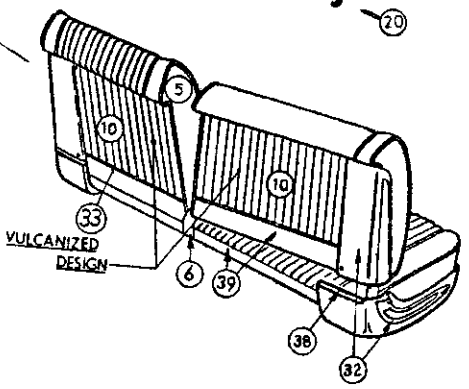

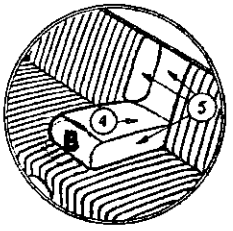

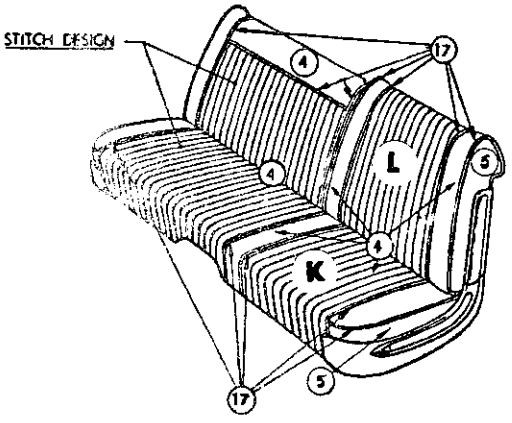

DISTRIBUTION OF MATERIAL

4	LEATHER	
5	IMITATION LEATHER	28-AM-22
6	IMITATION LEATHER	19-C-22
8	IMITATION LEATHER	19B-C-22
10	IMITATION LEATHER	22-AR-22
12	IMITATION LEATHER	19-C-5
17	EXTRUDED VINYL	
18	FLOOR COVERING-FRONT-CARPET	
19	FLOOR COVERING-REAR-CARPET	
20	FLOOR COVERING-LUGG. COMPT. CARPET	
21	EMBOSSED CARDBOARD	
30	PLASTIC	
31	PAINT	
32	METAL	
33	MOULDING	
35	POLYETHYLENE	
36	MYLAR	
38	MOULDED RESIN	
39	CARPET	
40	WOVEN PAPER	

Distribution Drawing Legend Page Appears Following Illustration Section

Codes 553, 555, 556, 557

SYM-233 1962 IMPERIAL SY1-M SPECIAL CLUB COUPE
LEATHER TRIM

MyMopar.com

1962 CHRYSLER AND IMPERIAL - S SERIES

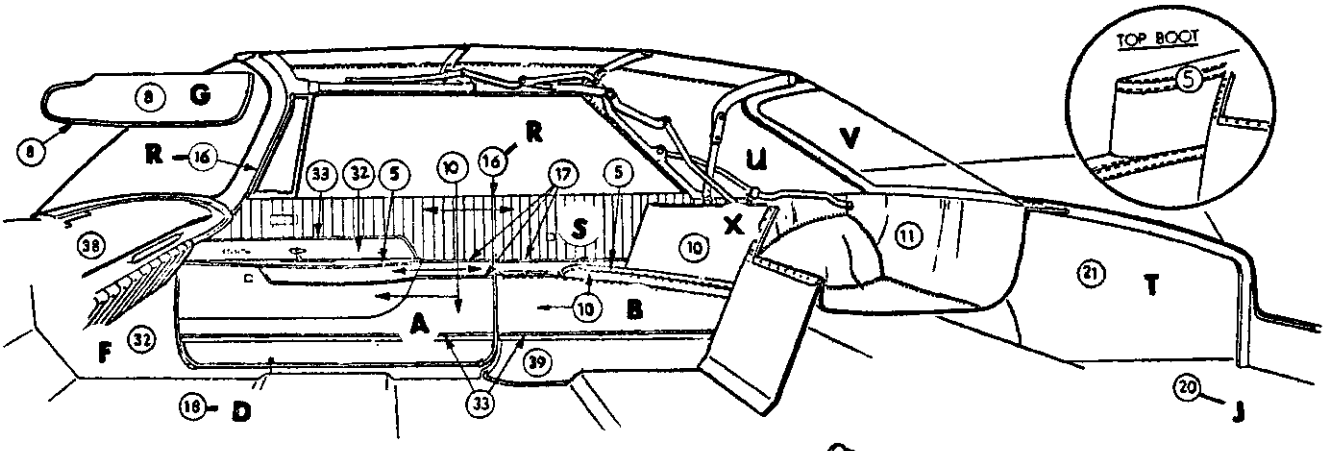

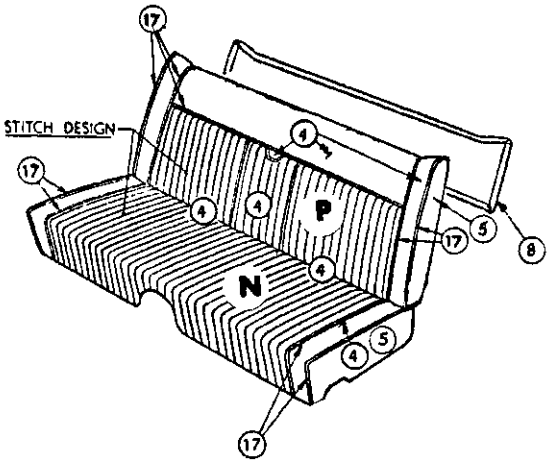

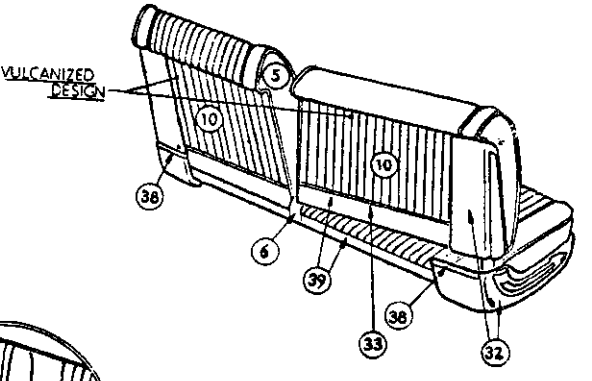

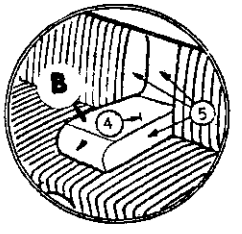

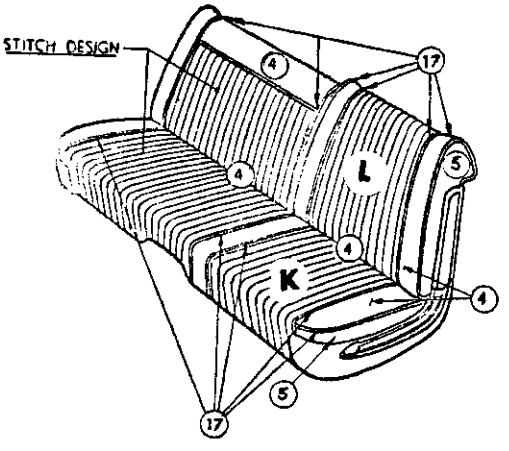

DISTRIBUTION OF MATERIAL

4	LEATHER	
5	IMITATION LEATHER	28-AM-22
6	IMITATION LEATHER	19-C-22
8	IMITATION LEATHER	19C-C-22
10	IMITATION LEATHER	22-AR-22
11	IMITATION LEATHER	28A-AM-22
17	EXTRUDED VINYL	
18	FLOOR COVERING-FRONT-CARPET	
19	FLOOR COVERING-REAR-CARPET	
20	FLOOR COVERING-LUGG. COMPT. CARPET	
21	EMBOSSED CARDBOARD	
30	PLASTIC	
31	PAINT	
32	METAL	
33	MOULDING	
36	MYLAR	
38	MOULDED RESIN	
39	CARPET	

Distribution Drawing Legend Page Appears Following Illustration Section

Codes 553, 555, 556, 557

SYM-273 **1962 IMPERIAL SY1-M CONVERTIBLE COUPE LEATHER TRIM**

MyMopar.com

1962 CHRYSLER & IMPERIAL - S SERIES

Distribution Drawing Legend

See Illustrations For Letter Identification

Letter	Description	Code
A	Panel, Door Trim	23-92-5
B	Arm Rest, Door, Front	23-76-3
	Center, Front Seat	23-76-34
	Center, Rear Seat	23-76-40
	Door, Rear	23-76-59
	Quarter Panel	23-76-66
C	Headlining	23-86-3
D	Floor Cover, Front, Carpet	23-79-3
	Rubber	23-20-8
	Rear, Carpet	23-79-33
	Rubber	23-20-41
E	Panel, Shelf Trim	23-102-3
F	Panel, Cowl Trim	23-91-6
G	Visor	23-103-3
H	Panel, Luggage Compartment, Front	23-96-3
J	Cover, Luggage Compartment Floor	23-20-29
K	Cover, Front Seat Cushion	23-108-5
L	Cover, Front Seat Back	23-108-16
M	Cover, Front Seat Hinge	23-108-84
N	Cover, Rear Seat Cushion	23-109-36
P	Cover, Rear Seat Back	23-109-4
Q	Cover, Rear Seat Cushion Bottom Panel	23-109-40
R	Weathercord, Door	23-113-2
	Hinge Pillar	23-113-25
	Lock Pillar	23-113-30
S	Panel, Quarter Trim	23-101-3
T	Cover, Wheelhouse	23-96-8
U	Top Deck & Side Quarter	23-112-108
V	Curtain, Folding Top Back	23-112-45
W	Cover, Center Pillar	23-99-4
X	Well, Pocket Panel, Pocket Panel Cover, Pocket Shelf Panel, Folding Top	23-112-153
Y	Cover, Tailgate Inside Panel	23-79-79
Z	Cover, Rear Seat Back Panel	23-109-5

MyMopar.com

NOTES

MyMopar.com

BODY CODE	COLUMN LEGEND
	NEWPORT (SC1-L)
812 (23)	2 D. Hard Top
813 (41)	4 D. Sedan
814 (43)	4 D. Hard Top
815 (27)	Convertible
858 (46)	Suburban (6 Pass.)
859 (46)	Suburban (9 Pass.)
893 (41)	4 D. Sedan (Police)
898 (45A)	Suburban (6 Pass.) (Police)
	NEWPORT (300) (SC2-M)
822 (23)	2 D. Hard Top
824 (43)	4 D. Hard Top
825 (27)	Convertible
	NEW YORKER (300-H) (SC2-M)
842 (23)	2 D. Hard Top
845 (27)	Convertible
	NEW YORKER (SC3-H)
833 (41)	4 D. Sedan
834 (43)	4 D. Hard Top
878 (46)	Suburban (6 Pass.)
879 (46)	Suburban (9 Pass.)
893 (41)	4 D. Limousine
808 (46)	Ambulance
	IMPERIAL (SY1-L)
912 (23)	2 D. Hard Top
914 (43)	4 D. Hard Top
	CROWN IMPERIAL (SY1-M)
922 (23)	2 D. Hard Top
924 (43)	4 D. Hard Top
925 (27)	Convertible
	LE BARON (SY1-H)
934 (43)	4 D. Hard Top

CONVERTIBLE TOP COLOR LEGEND

1 Black 2 White

STARTING SERIAL NUMBERS

Detroit Built

SC1-L	(Newport)	8123-100001
SC1-L	(Newport Suburban)	8523-100001
SC2-M	(300)	8223-100001
SC2-M	(C300-H)	8423-100001
SC3-H	(New Yorker)	8323-100001
SC3-H	(New Yorker Suburban)	8723-100001
SY-1	(Imperial Custom)	9123-100001
SY-1	(Imperial Crown)	9223-100001
SY-1	(Imperial LeBaron)	9323-100001

★ Indicates use as required.
⊟ Indicates parts not listed in any previous parts book.
Right and left part numbers are on same line, first number is right, second number is left.
* Indicates change or addition.

Printed in U.S.A.
Prices and specifications subject to change without notice.
May 1, 1962 Supersedes Nov. 30, 1961.

MyMopar.com

TRIM CODES

TRIM CODE	MODEL	MATERIAL Cloth	MATERIAL Vinyl	MATERIAL Leather	COLOR	SED.	SP. 4 D.	SUB.	SP. CL. CP.	CV. CP.
301	C1-L	★	★	-	Blue	★	★	-	-	-
302	C1-L	★	★	-	Green (plaid)	★	★	-	★	-
303	C1-L	★	★	-	Cocoa	★	★	-	-	-
304	C1-L	★	★	-	Gray and Black	★	★	-	-	-
305	C1-L	★	★	-	Red	★	★	-	-	-
308	C1-L	★	★	-	Turquoise (plaid)	★	★	-	★	-
313	C2-M	★	★	-	Tan	-	★	-	-	-
314	C2-M	★	★	-	Gray and Black	-	★	-	-	-
315	C2-M	★	★	-	Red	-	★	-	-	-
331	C3-H	★	★	-	Blue	★	★	-	-	-
333	C3-H	★	★	-	Cocoa	★	★	-	-	-
334	C3-H	★	★	-	Gray	★	★	-	-	-
335	C3-H	★	★	-	Red	★	★	-	-	-
341	C1-L	★	★	-	Blue	★	★	-	★	-
343	C1-L	★	★	-	Cocoa	★	★	-	★	-
344	C1-L	★	★	-	Gray and Black	★	★	-	★	-
345	C1-L	★	★	-	Red	★	★	-	★	-
401	C1-L	-	★	-	Blue	-	-	-	-	★
403	C1-L	-	★	-	Cocoa	-	-	★	-	-
404	C1-L	-	★	-	Black	-	★	★	★	★
405	C1-L	-	★	-	Red	-	-	★	★	★
413	C2-M	-	★	-	Gold	-	★	-	-	-
414	C2-M	-	★	-	Black	-	★	-	-	-
415	C2-M	-	★	-	Red	-	★	-	-	-
423	C3-H	-	★	-	Cocoa	-	-	★	-	-
424	C3-H	-	★	-	Black	-	-	★	-	-
425	C3-H	-	★	-	Red	-	-	-	★	★
444	C1-L, C3-H	-	★	-	Gray	★	-	-	-	-
453	C2-M	-	-	★	Gold	-	★	-	★	★
454	C2-M	-	-	★	Black	-	★	-	★	★
455	C2-M	-	-	★	Red	-	★	-	★	★
463	C2-M	-	-	★	Tan	-	-	-	★	★
464	C3-H	-	★	-	Black	-	★	-	★	-
465	C3-H	-	★	-	Red	-	★	-	★	-
501	Y1-L	★	★	-	Blue	-	★	-	★	-
502	Y1-L	★	★	-	Green	-	★	-	★	-
503	Y1-L	★	★	-	Cordovan	-	★	-	★	-
504	Y1-L	★	★	-	Gray	-	★	-	★	-
511	Y1-M	★	-	★	Blue	-	★	-	★	-
512	Y1-M	★	-	★	Green	-	★	-	★	-
513	Y1-M	★	-	★	Cordovan	-	★	-	★	-
514	Y1-M	★	-	★	Gray	-	★	-	★	-
515	Y1-M	★	-	★	Red	-	★	-	★	-
516	Y1-M	★	-	★	Black	-	★	-	★	-
553	Y1-M	-	-	★	Tan	-	★	-	★	★
555	Y1-M	-	-	★	Red	-	★	-	★	★
556	Y1-M	-	-	★	Black	-	★	-	★	★
557	Y1-M	-	-	★	Off White	-	★	-	★	★
521	Y1-H	★	-	-	Black	-	★	-	-	-
522	Y1-H	★	-	★	Green	-	★	-	-	-
523	Y1-H	★	-	★	Cocoa	-	★	-	-	-
524	Y1-H	★	-	★	Gray	-	★	-	-	-
534	Y1-H	★	-	-	Gray	-	★	-	-	-
565	Y1-H	-	-	★	Red	-	★	-	-	-
567	Y1-H	-	-	★	White	-	★	-	-	-

★ Indicates use as required.
⊟ Indicates parts not listed in any previous parts book.
March 8, 1963 Supersedes May 1, 1962.

Printed in U.S.A.
Prices and specifications subject to change without notice.
Right and left part numbers are on same line, first number is right, second number is left.
* Indicates change or addition.

MyMopar.com

NOTE: RIGHT HAND AND LEFT HAND PARTS LISTED ON THE SAME LINE. Whenever right and left hand parts are identified by consecutive part numbers, they will be listed as in the following example: PANEL, Door Trim 2083 344-5
Interpreted, this indicates that Panel, right is Part No. 2083 344 and Panel, left is Part No. 2083 345.

CODE	REMARKS	PER CAR	SED.	SP. 4D.	SUB.	SP. CL. CP.	CV. CP.
23-70-5	COVER, Wheelhouse Second Seat Back Hinge Bracket						
	C1-L, C3-H (codes 404, 424)	1	---- ---	---- ---	2169 991-2		
	(codes 405, 425)	1	---- ---	---- ---	2178 332-3		
	(codes 403, 423)	1	---- ---	---- ---	2178 611-2		
23-70-6	HINGE, Second Seat Back						
	C1, C3	1	---- ---	---- ---	2094 882-3		
23-71-1	COVER, Floor Tunnel Console						
	C2-M Frt.	1	---- ---	---- ---	---- ---	2132 692-3	2132 692-3
	Rr.	1	---- ---	---- ---	---- ---	2132 695-6	2132 695-6
23-76-3	ARM REST, Front Door						
	C1-L, C2-M (codes 301, 341, 401)	1	*2273 006-7	*2273 006-7	---- ---	*2273 006-7	
	(codes 303, 343, 403)	1	*2273 010-1	*2273 010-1	*2273 010-1	*2273 010-1	
	(codes 304, 344, 444)	1	*2273 012-3	*2273 012-3	*2273 012-3	*2273 012-3	*2273 012-3
	(codes 305, 315, 345, 405, 415, 425, 455)	1	*2273 014-5	*2273 014-5	*2273 014-5	*2273 014-5	*2273 014-5
	(codes 313, 413, 453, 463)	1	---- ---	2178 840-1	---- ---	2178 840-1	2178 840-1
	(codes 302, 308, 314, 404, 414, 424, 454)	1	*2177 818-9	2177 818-9	2177 818-9	2177 818-9	2177 818-9
	C3-H (code 331)	1	2178 312-3	2178 312-3			
	(code 333)	1	2178 314-5	2178 314-5			
	(code 334)	1	2178 316-7	2178 316-7			
	(code 335)	1	2178 318-9	2178 318-9			
	(code 423) (Police and Fleet)	1	---- ---	---- ---	*2273 010-1		
	(code 423)	1	---- ---	---- ---	2178 324-5		
	(codes 424, 464)	1	---- ---	2178 322-3	2178 322-3		
	(codes 425, 465)	1	2178 320-1	2178 320-1	2178 320-1		
	Screw	4	162 090	162 090	162 090		
23-76-5	PULL, Door Arm Rest						
	C3-H	1	2080 114-5	2080 114-5	2080 114-5		
	Y1	1	---- ---	2085 660-1	---- ---	2085 660-1	2085 660-1
23-76-7	BRACKET, Front Door Arm Rest Support						
	C3-H	2	2086 210	2086 210	2086 210		
23-76-16	NUT, Door and Quarter Panel Arm Rest Attaching						
	C1, C2, C3	4	1280 134	1280 134	1280 134	1280 134	1280 134
23-76-18	ARM REST, Front Seat Back Center						
	C2-M (code 453)	1	---- ---	---- ---	---- ---	2132 482	2132 482
	(code 454)	1	---- ---	---- ---	---- ---	2132 483	2132 483
	(code 455)	1	---- ---	---- ---	---- ---	2132 484	2132 484
	Y1-M (code 511)	1	---- ---	2149 150			
	(code 512)	1	---- ---	2149 151			
	(code 513)	1	---- ---	2149 152			
	(code 514)	1	---- ---	2149 153			
	(code 515)	1	---- ---	2149 154			
	(code 516)	1	---- ---	2149 155			
	(code 553)	1	---- ---	2149 156			
	(codes 555, 565)	1	---- ---	2149 157			
	(code 556)	1	---- ---	2149 158			
	(codes 557, 567)	1	---- ---	2149 159			

★ Indicates use as required.
⊟ Indicates parts not listed in any previous parts book.
Right and left part numbers are on same line, first number is right, second number is left.
* Indicates change or addition.

Printed in U.S.A.
Prices and specifications subject to change without notice.
March 8, 1963 Supersedes May 1, 1962.

MyMopar.com

CODE	REMARKS	PER CAR	SED.	SP. 4D.	SUB.	SP. CL. CP.	CV. CP.
23-76-18	ARM REST, Front Seat Back Center - Cont'd						
	Y1-H (code 521)	1	---- ---	2149 899			
	(code 522)	1	---- ---	2149 330			
	(code 523)	1	---- ---	2149 331			
	(code 524)	1	---- ---	2149 332			
	(code 534)	1	---- ---	2149 329			
23-76-19	FLAP, Front Seat Back Center Arm Rest						
	Y1-M, Y1-H (codes 511, 521)	1	---- ---	2149 132			
	(codes 512, 522)	1	---- ---	2149 133			
	(codes 513, 523)	1	---- ---	2149 134			
	(codes 514, 524)	1	---- ---	2149 135			
	(codes 515, 555, 565)	1	---- ---	2149 136			
	(codes 516, 556)	1	---- ---	2149 137			
	Y1-M (code 553)	1	---- ---	2149 138			
	(codes 557, 567)	1	---- ---	2149 139			
	Y1-H (code 534)	1	---- ---	2149 322			
23-76-27	HOOK, Front Seat Center Arm Rest Frame						
	C2-M	1	---- ---	---- ---	---- ---	1918 568	1918 568
23-76-34	COVER, Front Seat Back Center Arm Rest						
	C2-M (code 453)	1	---- ---	---- ---	---- ---	2132 492	2132 492
	(code 454)	1	---- ---	---- ---	---- ---	2132 493	2132 493
	(code 455)	1	---- ---	---- ---	---- ---	2132 494	2132 494
	Y1-M (code 511)	1	---- ---	2149 140			
	(code 512)	1	---- ---	2149 141			
	(code 513)	1	---- ---	2149 142			
	(code 514)	1	---- ---	2149 143			
	(code 515)	1	---- ---	2149 144			
	(code 516)	1	---- ---	2149 145			
	(code 553)	1	---- ---	2149 146			
	(codes 555, 565)	1	---- ---	2149 147			
	(code 556)	1	---- ---	2149 148			
	(codes 557, 567)	1	---- ---	2149 149			
	Y1-H (code 521)	1	---- ---	2149 903			
	(code 522)	1	---- ---	2149 325			
	(code 523)	1	---- ---	2149 326			
	(code 524)	1	---- ---	2149 327			
	(code 534)	1	---- ---	2149 324			
23-76-40	ARM REST, Rear Seat Back Center						
	C3-H (codes 321, 331)	1	2132 032	2132 032			
	(code 334)	1	2132 034	2132 034			
	(code 333)	1	2132 033	2132 033			
	(code 335)	1	2132 273	2132 273			
	(code 464)	1	---- ---	*2132 753			
	(code 465)	1	---- ---	*2132 128			
	Y1-L (code 501)	1	---- ---	2148 647	---- ---	2148 647	
	(code 502)	1	---- ---	2148 648	---- ---	2148 648	
	(code 503)	1	---- ---	2148 649	---- ---	2148 649	
	(code 504)	1	---- ---	2148 650	---- ---	2148 650	
	Y1-M (code 511)	1	---- ---	2149 016	---- ---	2149 016	
	(code 512)	1	---- ---	2149 017	---- ---	2149 017	
	(code 513)	1	---- ---	2149 018	---- ---	2149 018	
	(code 514)	1	---- ---	2149 019	---- ---	2149 019	
	(code 515)	1	---- ---	2149 020	---- ---	2149 020	
	(code 516)	1	---- ---	2149 021	---- ---	2149 021	
	(code 553)	1	---- ---	2149 022	---- ---	2149 022	2149 022

★ Indicates use as required.
⊟ Indicates parts not listed in any previous parts book.
May 1, 1962 Supersedes Nov. 30, 1961.

Printed in U.S.A.
Prices and specifications subject to change without notice.
Right and left part numbers are on same line, first number is right, second number is left.
* Indicates change or addition.

MyMopar.com

CODE	REMARKS	PER CAR	SED.	SP. 4 D.	SUB.	SP. CL. CP.	CV. CP.
23-76-40	ARM REST, Rear Seat Back Center - Cont'd						
	Y1-M						
	(codes 555, 565)	1	---- ---	2149 023	---- ---	2149 023	2149 023
	(code 556)	1	---- ---	2149 024	---- ---	2149 024	2149 024
	(codes 557, 567)	1	---- ---	2149 025	---- ---	2149 025	2149 025
	Y1-H (code 521)	1	---- ---	2149 907			
	(code 522)	1	---- ---	2149 283			
	(code 523)	1	---- ---	2149 284			
	(code 524)	1	---- ---	2149 285			
	(code 534)	1	---- ---	2149 282			
23-76-45	COVER, Rear Seat Back Center Arm Rest						
	C3-H (code 331)	1	2132 035	2132 035			
	(code 333)	1	2132 036	2132 036			
	(code 334)	1	2132 037	2132 037			
	(code 335)	1	2132 310	2132 310			
	(code 464)	1	---- ---	*2132 754			
	(code 465)	1	---- ---	2132 129			
	Y1-L (code 501)	1	---- ---	2148 643	---- ---	2148 643	
	(code 502)	1	---- ---	2148 644	---- ---	2148 644	
	(code 503)	1	---- ---	2148 645	---- ---	2148 645	
	(code 504)	1	---- ---	2148 646	---- ---	2148 646	
	Y1-M (code 511)	1	---- ---	2149 006	---- ---	2149 006	
	(code 512)	1	---- ---	2149 007	---- ---	2149 007	
	(code 513)	1	---- ---	2149 008	---- ---	2149 008	
	(code 514)	1	---- ---	2149 009	---- ---	2149 009	
	(code 515)	1	---- ---	2149 010	---- ---	2149 010	
	(code 516)	1	---- ---	2149 011	---- ---	2149 011	
	(code 553)	1	---- ---	2149 012	---- ---	2149 012	2149 012
	(codes 555, 565)	1	---- ---	2149 013	---- ---	2149 013	2149 013
	(code 556)	1	---- ---	2149 014	---- ---	2149 014	2149 014
	(codes 557, 567)	1	---- ---	2149 015	---- ---	2149 015	2149 015
	Y1-H (code 521)	1	---- ---	2149 910			
	(code 522)	1	---- ---	2149 278			
	(code 523)	1	---- ---	2149 279			
	(code 524)	1	---- ---	2149 280			
	(code 534)	1	---- ---	2149 277			
23-76-53	FLAP, Rear Seat Back Center Arm Rest						
	C3-H (code 331)	1	2132 038	2132 038			
	(code 333)	1	2132 039	2132 039			
	(code 334)	1	2132 040	2132 040			
	(code 335)	1	2132 319	2132 319			
	(code 464)	1	---- ---	*2132 755			
	(code 465)	1	---- ---	*2131 730			
	Y1-L, Y1-M, Y1-H						
	(codes 501, 511, 521)	1	---- ---	2148 659	---- ---	2148 659	
	(codes 502, 512, 522)	1	---- ---	2148 660	---- ---	2148 660	
	(codes 504, 514, 524)	1	---- ---	2148 662	---- ---	2148 662	
	(codes 503, 513, 523, 553)	1	---- ---	2148 661	---- ---	2148 661	2148 661
	(codes 515, 555, 565)	1	---- ---	2148 663	---- ---	2148 663	2148 663
	(codes 516, 556)	1	---- ---	2148 664	---- ---	2148 664	2148 664
	(codes 557, 567)	1	---- ---	2148 665	---- ---	2148 665	2148 665
23-76-57	FRAME, Rear Seat Back Center Arm Rest						
	C3	1	2160 640	2160 640			
	Y1	1	---- ---	2160 576	---- ---	2160 576	2160 578

★ Indicates use as required.
⊟ Indicates parts not listed in any previous parts book.
Right and left part numbers are on same line, first number is right, second number is left.
* Indicates change or addition.

Printed in U.S.A.
Prices and specifications subject to change without notice.
May 1, 1962 Supersedes Sept. 15, 1961.

MyMopar.com

CODE	REMARKS	PER CAR	SED.	SP. 4 D.	SUB.	SP. CL. CP.	CV. CP.
23-76-59	ARM REST, Rear Door						
	C1-L, C2-M (codes 301, 341, 401)	1	*2273 006-7	*2273 006-7			
	(codes 303, 343, 403, 423)	1	*2273 010-1	*2273 010-1			
	(codes 304, 344, 444)	1	*2273 012-3	*2273 012-3			
	(codes 305, 315, 345, 405, 415)	1	*2273 014-5	*2273 014-5	*2273 014-5		
	(codes 313, 413) (tan)	1	---- ---	2178 840-1			
	(codes 302, 304, 308, 314, 404, 414, 424, 454)	1	---- ---	*2177 818-9	*2177 818-9		
	(code 423)	1	---- ---	---- ---	*2178 324-5		
	(Police and Fleet)	1	---- ---	---- ---	*2273 010-1		
	C3-H (code 333)	1	2178 314-5	2178 314-5			
	(codes 424, 464)	1	---- ---	2178 322-3			
	(codes 425, 465)	1	---- ---	2178 320-1			
23-76-64	SUPPORT and BRACKET, Door Arm Rest						
	Y1	1	---- ---	2241 234-5			
23-76-66	ARM REST, Rear Quarter						
	C1-L, C2-M (codes 301, 341)	2	---- ---	---- ---	---- ---	*2273 000	
	(codes 303, 343)	2	---- ---	---- ---	---- ---	*2273 002	
	(codes 304, 344)	2	---- ---	---- ---	---- ---	*2273 003	
	(codes 302, 308, 314, 404)	2	---- ---	---- ---	---- ---	*2083 862	
	(codes 305, 315, 345, 405, 455)	2	---- ---	---- ---	---- ---	*2273 004	
	(codes 313, 453, 463)	2	---- ---	---- ---	---- ---	2178 839	
	(code 454)	2	---- ---	---- ---	---- ---	2083 862	
	C1-L, C2-M (code 401)	1	---- ---	---- ---	---- ---	---- ---	2132 110-1
	(codes 404, 454)	1	---- ---	---- ---	---- ---	---- ---	2132 112-3
	(codes 405, 455)	1	---- ---	---- ---	---- ---	---- ---	2132 114-5
	(code 453)	1	---- ---	---- ---	---- ---	---- ---	2132 352-3
	Y1-L (code 501)	1	---- ---	---- ---	---- ---	2148 722-3	
	(code 502)	1	---- ---	---- ---	---- ---	2148 724-5	
	(code 503)	1	---- ---	---- ---	---- ---	2148 726-7	
	(code 504)	1	---- ---	---- ---	---- ---	2148 728-9	
	Y1-M (code 511)	1	---- ---	---- ---	---- ---	2148 950-1	
	(code 512)	1	---- ---	---- ---	---- ---	2148 952-3	
	(code 513)	1	---- ---	---- ---	---- ---	2148 954-5	
	(code 514)	1	---- ---	---- ---	---- ---	2148 956-7	
	(code 515)	1	---- ---	---- ---	---- ---	2148 958-9	
	(code 516)	1	---- ---	---- ---	---- ---	2148 960-1	
	(code 553)	1	---- ---	---- ---	---- ---	2148 970-1	2149 064-5
	(code 555)	1	---- ---	---- ---	---- ---	2148 972-3	2149 066-7
	(code 556)	1	---- ---	---- ---	---- ---	2148 974-5	2149 068-9
	(code 557)	1	---- ---	---- ---	---- ---	2148 976-7	2149 070-1
23-76-79	SUPPORT, Quarter Panel Arm Rest						
	Y1	1	---- ---	---- ---	---- ---	1751 534-5	1751 534-5
23-76-80	NUT, Quarter Trim Panel Arm Rest to Quarter Panel						
	C1, C2	4	---- ---	---- ---	---- ---	1280 134	
23-76-86	COVER, Rear Quarter Arm Rest						
	C1-L, C2-M (code 401)	1	---- ---	---- ---	---- ---	---- ---	2132 116-7
	(code 453)	1	---- ---	---- ---	---- ---	---- ---	2132 404-5
	(codes 404, 454)	1	---- ---	---- ---	---- ---	---- ---	2132 118-9
	(codes 405, 455)	1	---- ---	---- ---	---- ---	---- ---	2132 120-1
	Y1-L (code 501)	1	---- ---	---- ---	---- ---	2148 714-5	
	(code 502)	1	---- ---	---- ---	---- ---	2148 716-7	
	(code 503)	1	---- ---	---- ---	---- ---	2148 718-9	
	(code 504)	1	---- ---	---- ---	---- ---	2148 720-1	
	Y1-M (code 511)	1	---- ---	---- ---	---- ---	2148 938-9	
	(code 512)	1	---- ---	---- ---	---- ---	2148 940-1	
	(code 513)	1	---- ---	---- ---	---- ---	2148 942-3	

MyMopar.com

CODE	REMARKS	PER CAR	SED.	SP. 4 D.	SUB.	SP. CL. CP.	CV. CP.
23-76-86	COVER, Rear Quarter Arm Rest - Cont'd						
	Y1-M (code 514)	1	---- ---	---- ---	---- ---	2148 944-5	
	(code 515)	1	---- ---	---- ---	---- ---	2148 946-7	
	(code 516)	1	---- ---	---- ---	---- ---	2148 948-9	
	(code 553)	1	---- ---	---- ---	---- ---	2148 962-3	2149 056-7
	(code 555)	1	---- ---	---- ---	---- ---	2148 964-5	2149 058-9
	(code 556)	1	---- ---	---- ---	---- ---	2148 966-7	2149 060-1
	(code 557)	1	---- ---	---- ---	---- ---	2148 968-9	2149 062-3
23-76-106	ARM REST, Floor Tunnel Console						
	C2-M Frt.	1	---- ---	---- ---	---- ---	2132 697	2132 697
	Rr.	1	---- ---	---- ---	---- ---	2132 709	2132 709
23-76-107	COVER, Floor Tunnel Console Arm Rest						
	C2-M	2	---- ---	---- ---	---- ---	2132 698	2132 698
	(inside upper)	2	---- ---	---- ---	---- ---	2132 699	2132 699
23-78-2	BUTTONS, Tufting						
	Y1-M (luggage compartment)						
	(light gray)	2	---- ---	---- ---	---- ---	---- ---	2175 539
	(dark gray)	2	---- ---	---- ---	---- ---	---- ---	2178 205
23-79-3	CARPET, Front Floor						
	C1-L, C2-M, C3-H						
	(codes 301, 321, 331, 341, 401) (blue)	1	*2177 015	*2177 015	---- ---	*2177 015	*2177 015
	(codes 303, 333, 403) (cordovan)	1	2177 016	2177 016	*2177 016	2177 016	
	(codes 302, 304, 308, 313, 314, 334, 344, 345, 404, 405, 413, 414, 415, 423, 424, 425, 453, 454, 455, 464, 465) (black)	1	*2177 017	*2177 017	*2177 017	*2177 017	*2177 017
	(code 463) (tan)	1	---- ---	---- ---	---- ---	2178 366	2178 366
	Y1-L (code 501) (blue)	1	---- ---	2177 786	---- ---	2177 786	
	(code 502) (green)	1	---- ---	2177 787	---- ---	2177 787	
	(code 503) (cordovan)	1	---- ---	2177 788	---- ---	2177 788	
	(code 504) (black)	1	---- ---	2177 789	---- ---	2177 789	
	Y1-M, Y1-H (codes 511, 531) (blue)	1	---- ---	2177 794	---- ---	2177 794	
	(codes 512, 522) (green)	1	---- ---	2177 795	---- ---	2177 795	
	(codes 513, 523) (cordovan)	1	---- ---	2177 796	---- ---	2177 796	
	(code 553) (tan)	1	---- ---	2177 799	---- ---	2177 799	2177 799
	(codes 515, 555) (red)	1	---- ---	2177 798	---- ---	2177 798	2177 798
	(codes 514, 516, 524, 534, 556, 557, 567) (black)	1	---- ---	*2177 797	---- ---	*2177 797	*2177 797
23-79-33	CARPET, Rear Floor						
	C1-L, C2-M, C3-H (codes 301, 321, 331, 341) (blue)	1	*2176 669	*2176 669	---- ---	*2176 673	*2176 673
	(codes 303, 333, 343, 403, 423) (cordovan)	1	*2176 670	*2176 670	*2178 617	*2176 674	
	(codes 302, 304, 305, 308, 313, 314, 315, 334, 344, 345, 404, 405, 414, 415, 424, 425, 453, 454, 455, 464, 465) (black)	1	*2175 494	*2175 494	*2211 837	*2175 494	*2175 494
	(code 463) (tan)	1	---- ---	---- ---	---- ---	*2178 367	*2178 367
	C1-L, C3-H (codes 403, 404, 405)(axle kick-up rear panel)	1	---- ---	---- ---	2169 953		
	(rear floor pan cover insert)	1	---- ---	---- ---	2169 951		
	(center seat to rear floor pan insert)	1	---- ---	---- ---	2169 950		

★ Indicates use as required.
B Indicates parts not listed in any previous parts book.
Right and left part numbers are on same line, first number is right, second number is left.
* Indicates change or addition.

Printed in U.S.A.
Prices and specifications subject to change without notice.
March 8, 1963 Supersedes May 1, 1962.
MyMopar.com

CODE	REMARKS	PER CAR	SED.	SP. 4 D.	SUB.	SP. CL. CP.	CV. CP.
23-79-33	CARPET, Rear Floor - Cont'd						
	C1-L, C3-H						
	(codes 423, 424, 425)(police, ambulance and limo.)						
	(rear floor pan cover insert)	1	---- ---	---- ---	2169 951		
	(second seat rear floor pan insert)	1	---- ---	---- ---	2169 950		
	(codes 403, 423)						
	(spare tire compartment floor)	1	---- ---	---- ---	*2178 619		
	(spare tire compartment well riser)	1	---- ---	---- ---	2178 184-5		
	(rear floor pan insert)	1	---- ---	---- ---	2178 639		
	(axle kick-up rear panel)	1	---- ---	---- ---	2178 648		
	(codes 424, 425) (spare tire compartment)	1	---- ---	---- ---	2176 098		
	(spare tire compartment well riser)	1	---- ---	---- ---	2173 023-4		
	(rear floor pan insert)	1	---- ---	---- ---	*2176 437		
	(axle kick-up rear panel)	1	---- ---	---- ---	2176 097		
	Y1-L (code 501) (blue)	1	---- ---	2177 868	---- ---	2177 874	
	(code 502) (green)	1	---- ---	2177 869	---- ---	2177 875	
	(code 503) (cordovan)	1	---- ---	2177 870	---- ---	2177 876	
	(code 504) (black)	1	---- ---	2177 841	---- ---	2177 851	
	Y1-M, Y1-H (codes 511, 531) (blue)	1	---- ---	2177 880	---- ---	2177 885	
	(codes 512, 522) (green)	1	---- ---	2177 881	---- ---	2177 886	
	(codes 513, 523) (cordovan)	1	---- ---	2177 882	---- ---	2177 887	
	(code 553) (tan)	1	---- ---	2177 884	---- ---	2177 889	2177 893
	(codes 514, 516, 524, 534, 556, 557, 567) (black)	1	---- ---	*2177 861	---- ---	*2177 866	*2177 891
	(codes 515, 555) (red)	1	---- ---	2177 883	---- ---	2177 888	*2177 888
23-79-62	INSERT, Second Seat Cushion Panel						
	C1-L, C3-H						
	(codes 403, 404, 405) (gray)	1	---- ---	---- ---	2169 946		
	(codes 423, 424, 425) (police, ambulance and limo.)	1	---- ---	---- ---	2169 946		
	(codes 424, 425) (black)	1	---- ---	---- ---	2176 436		
	(code 423) (cordovan)	1	---- ---	---- ---	2178 634		
23-79-64	CARPET, Luggage Compartment Floor						
	Y1 (one piece)	1	---- ---	*2149 775	---- ---	*2149 775	*2149 776
	(two pieces) Rt.	1	---- ---	*2295 580	---- ---	*2295 580	*2295 580
	Lt.	1	---- ---	*2295 581	---- ---	*2295 581	*2295 581
	(spare tire cover)	1	---- ---	2149 774			
	(deck opening lower cover)	1	---- ---	*2178 207	---- ---	*2178 207	*2178 207
23-79-77	PANEL, Wheelhouse Inner						
	C1-L, C3-H (code 404) (black)	1	---- ---	---- ---	2169 553-4		
	(code 405) (upper)	1	---- ---	---- ---	2177 004-5		
	(code 423) (cordovan)	1	---- ---	---- ---	2178 653-4		
	(code 424) (black)	1	---- ---	---- ---	2176 998-9		
	(code 425) (black)	1	---- ---	---- ---	2177 000-1		
	(w/ledge cover) (code 423)	1	---- ---	---- ---	2132 566-7		
23-79-79	INSERT, Tailgate Inside Panel						
	C1-L, C3-H (codes 403, 404, 405)	1	---- ---	---- ---	2169 952		
	(codes 423, 424, 425) (police, ambulance and limo.)	1	---- ---	---- ---	2169 952		
	(codes 424, 425)	1	---- ---	---- ---	2176 438		
	(code 423) (cordovan)	1	---- ---	---- ---	2176 640		

★ Indicates use as required.
⊟ Indicates parts not listed in any previous parts book.
March 8, 1963 Supersedes May 1, 1962.

MyMopar.com

Printed in U.S.A.
Prices and specifications subject to change without notice.
Right and left part numbers are on same line, first number is right, second number is left.
* Indicates change or addition.

CODE	REMARKS	PER CAR	SED.	SP. 4 D.	SUB.	SP. CL. CP.	CV. CP.
23-82-3	STRAP, Front Seat Back Robe						
	Y1-L, Y1-M, Y1-H (codes 501, 511, 521) (blue)	1	---- ---	2177 486			
	(codes 502, 512, 522) (green)	1	---- ---	2177 487			
	(codes 503, 513, 523) (cocoa)	1	---- ---	2177 488			
	(codes 504, 514, 534) (gray)	1	---- ---	2177 489			
	(code 553) (tan)	1	---- ---	2177 491			
	(codes 515, 555, 565) (red)	1	---- ---	2177 490			
	(code 557, 567) (white)	1	---- ---	2177 492			
	(codes 516, 556) (black)	1	---- ---	2175 769			
23-82-5	COVER, Front Seat Back Robe Strap End						
	Y1	1	---- ---	2080 727			
23-82-6	BOLT, Step, Front Seat Back Robe Strap						
	Y1	1	---- ---	2080 824			
23-82-30	HOOK, Coat Hanger						
	C1, C2	2	2165 837	2165 837	2165 837	2165 837	
	Y1	2	---- ---	1520 791	---- ---	1520 791	
23-82-39	BRACKET, Coat Hook Support						
	C1, C2 (soft headlining)	2	---- ---	1963 287	---- ---	1963 287	
	(hard headlining)	2	1964 072				
23-84-3	PAD, Instrument Panel Trim						
	C1-L, C2-M, C3-H (codes 301, 331, 341, 401) (blue)	1	*2177 624	*2177 624	*2177 624	*2177 624	*2177 624
	(codes 303, 333, 343, 403, 423) (cocoa)	1	*2177 625	*2177 625	*2177 625	*2177 625	*2177 625
	(codes 313, 353, 413, 453, 463) (gold)	1	2178 842	2178 842	2178 842	2178 842	2178 842
	(codes 302, 304, 305, 308, 314, 315, 334, 335, 344, 345, 404, 405, 414, 415, 424, 425, 444, 454, 455, 464, 465) (black)	1	*2174 883	*2174 883	*2174 883	*2174 883	*2174 883
	(also specify 7 of 6008 222 fasteners)						
	Y1 (codes 501, 511, 521) (blue) (upper)	1	---- ---	2177 992	---- ---	2177 992	
	(lower center)	1	---- ---	2177 997	---- ---	2177 997	
	(lower right)	1	---- ---	2178 007	---- ---	2178 007	
	(glove box door)	1	---- ---	2178 017	---- ---	2178 017	
	(instruments housing)	1	---- ---	2178 027	---- ---	2178 027	
	(ash receiver door)	1	---- ---	2178 037	---- ---	2178 037	
	(heater control housing)	1	---- ---	2178 047	---- ---	2178 047	
	(gear selector housing)	1	---- ---	2178 057	---- ---	2178 057	
	(codes 502, 512, 522) (green)						
	(upper)	1	---- ---	2177 993	---- ---	2177 993	
	(lower center)	1	---- ---	2177 998	---- ---	2177 998	
	(lower right)	1	---- ---	2178 008	---- ---	2178 008	
	(glove box door)	1	---- ---	2178 018	---- ---	2178 018	
	(instruments housing)	1	---- ---	2178 028	---- ---	2178 028	
	(ash receiver door)	1	---- ---	2178 038	---- ---	2178 038	
	(heater control housing)	1	---- ---	2178 048	---- ---	2178 048	
	(gear selector housing)	1	---- ---	2178 058	---- ---	2178 058	
	(codes 503, 513, 523) (cordovan) upper	1	---- ---	2177 994	---- ---	2177 994	
	(lower center)	1	---- ---	2177 999	---- ---	2177 999	
	(lower right)	1	---- ---	2178 009	---- ---	2178 009	

★ Indicates use as required.
⊟ Indicates parts not listed in any previous parts book.
Right and left part numbers are on same line, first number is right, second number is left.
* Indicates change or addition.

Printed in U.S.A.
Prices and specifications subject to change without notice.
March 8, 1963 Supersedes May 1, 1962.

MyMopar.com

CODE	REMARKS	PER CAR	SED.	SP. 4 D.	SUB.	SP. CL. CP.	CV. CP.
23-84-3	PAD, Instrument Panel Trim - Cont'd						
	Y1 (codes 503, 513, 523)						
	(glove box door)(cordovan)	1	---- ---	2178 019	---- ---	2178 019	
	(instruments housing)	1	---- ---	2178 029	---- ---	2178 029	
	(ash receiver door)	1	---- ---	2178 039	---- ---	2178 039	
	(heater control housing)	1	---- ---	2178 049	---- ---	2178 049	
	(gear selector housing)	1	---- ---	2178 059	---- ---	2178 059	
	(codes 504, 514, 516, 524, 534, 556, 557, 567) (black)						
	(upper)	1	---- ---	2172 299	---- ---	2172 299	
	(lower center)	1	---- ---	2172 311	---- ---	2172 311	
	(lower right)	1	---- ---	2172 347	---- ---	2172 347	
	(glove box door)	1	---- ---	2172 335	---- ---	2172 335	
	(instruments housing)	1	---- ---	2172 359	---- ---	2172 359	
	(ash receiver)	1	---- ---	2172 323	---- ---	2172 323	
	(heater control housing)	1	---- ---	2174 684	---- ---	2174 684	
	(gear selector housing)	1	---- ---	2174 672	---- ---	2174 672	
	(codes 515, 555, 565) (red)						
	(upper)	1	---- ---	2177 995	---- ---	2177 995	2177 995
	(lower center)	1	---- ---	2178 000	---- ---	2178 000	2178 000
	(lower right)	1	---- ---	2178 010	---- ---	2178 010	2178 010
	(glove box door)	1	---- ---	2178 020	---- ---	2178 020	2178 020
	Y1 (codes 515, 555, 565)(red)						
	(instruments housing)	1	---- ---	2178 030	---- ---	2178 030	2178 030
	(ash receiver housing)	1	---- ---	2178 040	---- ---	2178 040	2178 040
	(heater control housing)	1	---- ---	2178 050	---- ---	2178 050	2178 050
	(gear selector housing)	1	---- ---	2178 060	---- ---	2178 060	2178 060
	(code 553) (tan)						
	(upper)	1	---- ---	2177 996	---- ---	2177 996	2177 996
	(lower center)	1	---- ---	2178 001	---- ---	2178 001	2178 001
	(lower right)	1	---- ---	2178 011	---- ---	2178 011	2178 011
	(glove box door)	1	---- ---	2178 021	---- ---	2178 021	2178 021
	(instruments housing)	1	---- ---	2178 031	---- ---	2178 031	2178 031
	(ash receiver housing)	1	---- ---	2178 041	---- ---	2178 041	2178 041
	(heater control housing)	1	---- ---	2178 051	---- ---	2178 051	2178 051
	(gear selector housing)	1	---- ---	2178 061	---- ---	2178 061	2178 061
23-84-30	CUSHION, Steering Wheel Horn Ring						
	C1, C2, C3 (codes 301, 331, 341, 401) (blue)	2	*2265 326	*2265 326	*2265 326	*2265 326	*2265 326
	(codes 303, 333, 343, 413, 453) (tan)	2	*2265 328	*2265 328	*2265 328	*2265 328	*2265 328
	(codes 304, 334, 344, 404, 414, 424, 454) (black)	2	*2265 327	*2265 327	*2265 327	*2265 327	*2265 327
	(codes 305, 315, 335, 345, 405, 415, 425, 455, 465) (red)	2	*2265 329	*2265 329	*2265 329	*2265 329	*2265 329
	(saddle tan)	1	2266 718	2266 718	2266 718	2266 718	2266 718
	Y1 (codes 501, 511, 531)(blue)	1	---- ---	2260 970	---- ---	2260 970	2260 970
	(codes 502, 512, 522)(green)	1	---- ---	2260 971	---- ---	2260 971	2260 971
	(codes 503, 513, 523)(cordovan)	1	---- ---	2260 972	---- ---	2260 972	2260 972
	(codes 504, 514, 524, 534, 556, 557, 567) (black)	1	---- ---	*2201 602	---- ---	*2201 602	*2201 602
	(code 553) (tan)	1	---- ---	2260 973	---- ---	2260 973	2260 973
	(codes 555, 557)	1	---- ---	2260 974	---- ---	2260 974	2260 974
23-84-31	RETAINER and ORNAMENT, Steering Wheel Cushion						
	Y1	1	---- ---	2200 587	---- ---	2200 587	2200 587
	(cushion base)	1	---- ---	2200 586	---- ---	2200 586	2200 586

★ Indicates use as required.
⊟ Indicates parts not listed in any previous parts book.
March 8, 1963 Supersedes May 1, 1962.

Printed in U.S.A.
Prices and specifications subject to change without notice.
Right and left part numbers are on same line, first number is right, second number is left.
* Indicates change or addition.

MyMopar.com

CODE	REMARKS	PER CAR	SED.	SP. 4 D.	SUB.	SP. CL. CP.	CV. CP.
23-86-3	HEADLINING and LISTING						
	C1-L, C3-H						
	(codes 301, 331, 341)	1	*2132 632	*2132 645			
	(code 302)						
	(low back light)	1	2144 259	2144 271			
	(high back light)	1	---- ---	*2144 263	---- ---	2144 267	
	(codes 303, 333, 343)	1	*2132 633	*2132 646			
	(codes 304, 334, 344, 444)	1	*2132 634				
	(codes 305, 335, 345)	1	*2132 198				
	(code 308)						
	(low back light)	1	2144 260	2144 272			
	(high back light)	1	---- ---	2144 364	---- ---	2144 268	
	C2-M (codes 313, 413, 453)	1	---- ---	*2132 647			
	(codes 314, 404, 414, 454)	1	---- ---	*2132 648			
	(codes 315, 345, 405, 415)	1	---- ---	*2132 649			
	C1-L, C2-M, C3-H (large rear window)(codes 301, 331)	1	---- ---	2132 680			
	(codes 303, 333)	1	---- ---	2132 681			
	(codes 313, 413)	1	---- ---	2132 682			
	(codes 304, 314, 334, 404, 414, 464)	1	---- ---	2132 683			
	(codes 305, 315, 335, 405, 415, 455, 465)	1	---- ---	2132 684			
	C1-L, C3-H (codes 403, 404, 405, 423, 424, 425) (white)						
	(No. 1)	1	---- ---	---- ---	*2180 950		
	(No. 2)	1	---- ---	---- ---	2176 826		
	(No. 3)	1	---- ---	---- ---	*2180 840		
	(No. 4)	1	---- ---	---- ---	2176 828		
	(No. 5)	1	---- ---	---- ---	2176 829		
	(No. 6)	1	---- ---	---- ---	2176 830		
	(No. 7)	1	---- ---	---- ---	2176 831		
	C1-L, C2-M (code 301)	1	---- ---	---- ---	---- ---	2132 661	
	(code 303)	1	---- ---	---- ---	---- ---	2132 662	
	(codes 313, 453, 463)	1	---- ---	---- ---	---- ---	*2132 665	
	(codes 304, 314, 454, 464)	1	---- ---	---- ---	---- ---	*2132 663	
	(codes 305, 315, 405, 455)	1	---- ---	---- ---	---- ---	2132 664	
	(retaining clip)	2	---- ---	---- ---	6000 373		
	Y1-L, Y1-M (codes 501, 511)	1	---- ---	2149 855			
	(codes 502, 512)	1	---- ---	2149 856			
	(codes 503, 513)	1	---- ---	2149 857			
	(codes 504, 514, 516, 556)	1	---- ---	2149 858			
	(code 553)	1	---- ---	2149 860			
	(codes 515, 555)	1	---- ---	2149 859			
	(code 557)	1	---- ---	2149 861			
	(code 565)	1	---- ---	2149 912			
	(code 567)	1	---- ---	2149 913			
	Y1-H (code 521)	1	---- ---	2149 883			
	(code 522)	1	---- ---	2149 884			
	(code 523)	1	---- ---	2149 885			
	(codes 524, 534)	1	---- ---	2149 886			
	(code 565)	1	---- ---	2149 912			
	(code 567)	1	---- ---	2149 913			
	Y1-L, Y1-M (codes 501, 511)	1	---- ---	---- ---	---- ---	2149 869	
	(codes 502, 512)	1	---- ---	---- ---	---- ---	2149 870	
	(codes 503, 513)	1	---- ---	---- ---	---- ---	2149 871	
	(cbdes 504, 514, 516, 556)	1	---- ---	---- ---	---- ---	2149 872	
	(code 553)	1	---- ---	---- ---	---- ---	2149 874	
	(codes 515, 555)	1	---- ---	---- ---	---- ---	2149 873	
	(code 557)	1	---- ---	---- ---	---- ---	2149 875	

★ Indicates use as required.
⊟ Indicates parts not listed in any previous parts book.
Right and left part numbers are on same line, first number is right, second number is left.
* Indicates change or addition.

Printed in U.S.A.
Prices and specifications subject to change without notice.
March 8, 1963 Supersedes May 1, 1962.

MyMopar.com

CODE	REMARKS	PER CAR	SED.	SP. 4 D.	SUB.	SP. CL. CP.	CV. CP.
23-86-6	SUPPORT, Rear Window Frame to Rear Headlining Listing Wire No. 6						
	Y1-L, Y1-M	2	---- ---	1961 348			
23-86-10	SUPPORT, Roof Bow						
	C1, C2 (steel)						
	(No. 1)	1	1954 682	1954 682	1954 682	1954 682	
	(No. 2)	1	---- ---	---- ---	1961 243		
	(No. 2) (w/dome lamp housing)	1	1963 606	1963 606	---- ---	2162 219	
	(No. 3 & 4)	1	---- ---	---- ---	1961 244		
23-86-11	RETAINER, Headlining Bow to Support						
	Y1	12	---- ---	6006 071	---- ---	6006 071	
23-86-13	FILLER, Air Conditioning Evaporating Unit Trim						
	C1, C3 (gray)	2	---- ---	---- ---	1914 582		
23-86-14	PAD, Air Conditioning Evaporating Unit Trim						
	C1, C3 (gray)	1	---- ---	---- ---	2171 580		
23-86-15	PANEL, Under Rear Window						
	Y1-H (code 521)	1	---- ---	2149 891			
	(code 522)	1	---- ---	2149 771			
	(code 523)	1	---- ---	2149 772			
	(codes 524, 534)	1	---- ---	2149 773			
	(code 565)	1	---- ---	2149 916			
	(code 567)	1	---- ---	2149 917			
23-86-19	STRIP, Roof Headlining Retaining						
	C1, C2 (low window)	1	1954 804-5				
	Y1 (side rail, frt.)	1	---- ---	1961 656-7	---- ---	1961 656-7	
	(shelf panel)	1	---- ---	2080 958-9			
	(up to) (44 1/2" lgh.)	2	---- ---	*2255 336	---- ---	*2255 336	
	(after) (46" lgh.)	2	---- ---	*2217 910	---- ---	*2217 910	
23-86-24	RETAINER, Roof Inside Finish Panel						
	C1-L, C3-H (No. 1)	1	---- ---	---- ---	2086 143		
	(No. 2)	1	---- ---	---- ---	2086 142		
	(No. 3)	1	---- ---	---- ---	2086 145		
	(No. 4)	1	---- ---	---- ---	2086 146		
	(No. 5)	1	---- ---	---- ---	2086 146		
	(No. 6)	1	---- ---	---- ---	2086 148		
	Y1 (windshield header)	1	---- ---	---- ---	2088 680-1		
23-86-35	MOULDING, Roof Inside Finish Panel						
	C1, C2, C3 (headlining bow)						
	(No. 1)	1	---- ---	1757 559	---- ---	2080 398	
	(No. 2)	1	---- ---	1757 559	---- ---	2080 399	
	(No. 3)	1	---- ---	1954 782	---- ---	2080 400	
	C1, C3 (finish panel) (chrome)						
	(Nos. 1, 2, 3, 4)	1	---- ---	---- ---	1905 449		
	(No. 5)	1	---- ---	---- ---	1759 686		
	(No. 6)	1	---- ---	---- ---	1905 449		
23-86-36	CAP, Roof Inside Finish Moulding						
	C1-L, C3-H (chrome)	12	---- ---	---- ---	1759 636		

★ Indicates use as required.
⊟ Indicates parts not listed in any previous parts book.
March 8, 1963 Supersedes May 1, 1962.

Printed in U.S.A.
Prices and specifications subject to change without notice.
Right and left part numbers are on same line, first number is right, second number is left.
* Indicates change or addition.

MyMopar.com

CODE	REMARKS		PER CAR	SED.	SP. 4D.	SUB.	SP. CL. CP.	CV. CP.
23-91-6	PANEL, Cowl Trim							
	C1, C2, C3 (paint as req'd)							
	(steel) (primed)	Rt.	1	*2086 612	*2086 612	---- ---	*2086 612	*2086 612
		Lt.	1	2086 613	2086 613	---- ---	2086 613	2086 613
	(code 463)		1	---- ---	---- ---	---- ---	2178 354-5	2178 354-5
	Y1 (paint as req'd)		1	---- ---	2241 520-1	---- ---	2241 520-1	2241 520-1
23-92-5	PANEL, Door Trim							
	C1-L (codes 301, 341, 401)	Frt.	1	*2177 022-3	*2177 042-3	---- ---	*2177 062-3	*2177 062-3
		Rr.	1	2177 024-5	2177 044-5	---- ---	*2179 592-3	
	(code 302)	Frt.	1	2179 576-7	2179 584-5			
		Rr.	1	2179 578-9	2179 586-7			
	(codes 303, 343, 403)	Frt.	1	*2177 027-8	*2177 047-8	*2177 047-8	*2177 067-8	
		Rr.	1	2177 029-30	2177 049-50	2177 049-50		
	(codes 304, 344, 444)	Frt.	1	*2177 032-3	*2177 052-3	*2177 557-8	*2177 072-3	*2177 565-6
		Rr.	1	2177 034-5	2177 054-5	2177 559-60		
	(code 404)	Frt.	1	---- ---	2177 557-8	2177 557-8	2177 565-6	2177 565-6
		Rr.	1	---- ---	2177 559-60	2177 559-60		
	(codes 305, 345, 405, 425)	Frt.	1	*2177 037-8	*2177 057-8	*2177 057-8	*2177 077-8	*2177 077-8
		Rr.	1	2177 039-40	2177 059-60	2177 059-60		
	(code 308)	Frt.	1	2179 580-1	2179 588-9	---- ---	2179 596-7	
		Rr.	1	2179 582-3	2179 590-1	---- ---	---- ---	---- ---
	C2-M (codes 313, 413, 453, 463)	Frt.	1	---- ---	2177 573-4	---- ---	2177 593-4	2177 593-4
		Rr.	1	---- ---	2177 575-6			
	(codes 314, 414, 454)	Frt.	1	---- ---	2177 588-9	---- ---	2177 608-9	
		Rr.	1	---- ---	2177 590-1			
	(codes 315, 415, 455)	Frt.	1	---- ---	2177 583-4	---- ---	2177 603-4	
		Rr.	1	---- ---	2177 585-6			
	(code 454)		1	---- ---	---- ---	---- ---	2177 608-9	2177 608-9
	(code 455)		1	---- ---	---- ---	---- ---	2177 603-4	2177 603-4
	(code 423)(police ambulance)							
		Frt.	1	---- ---	---- ---	2177 047-8		
		Rr.	1	---- ---	---- ---	2177 049-50		
	C3-H (code 331)	Frt.	1	2178 078-9	2178 093-4			
		Rr.	1	2178 080-1	2178 095-6			
	(code 333)	Frt.	1	2178 083-4	2178 098-9			
		Rr.	1	2178 085-6				
		Rr. Rt.	1	---- ---	2178 100			
		Rr. Lt.	1	---- ---	2178 101			
	(code 334)	Frt.	1	2178 088-9	2178 103-4			
		Rr.	1	2178 090-1	2178 105-6			
	(code 335)	Frt.	1	2178 607-8	2178 108-9			
		Rr.	1	2178 609-10	2178 110-11			
	(code 423)	Frt.	1	---- ---	---- ---	2178 642-3		
		Rr.	1	---- ---	---- ---	2178 644-5		
	(codes 424, 464)	Frt.	1	---- ---	2178 818-9	2178 818-9		
		Rr.	1	---- ---	2178 820-1	2178 820-1		
	(codes 425, 465)	Frt.	1	---- ---	2178 813-4	2178 813-4		
		Rr.	1	---- ---	2178 815-6	2178 815-6		
	(also specify 4 of 6023 476 screw)							
	Y1-L (code 501)	Frt.	1	---- ---	2177 082-3	---- ---	2177 110-1	
		Rr.	1	---- ---	2177 084-5			
	(code 502)	Frt.	1	---- ---	2177 089-90	---- ---	2177 115-6	
		Rr.	1	---- ---	2177 091-2			
	(code 503)	Frt.	1	---- ---	2177 096-7	---- ---	2177 120-1	
		Rr.	1	---- ---	2177 098-9			
	(code 504)	Frt.	1	---- ---	2177 103-4	---- ---	2177 125-6	
		Rr.	1	---- ---	2177 105-6			

★ Indicates use as required.
⊟ Indicates parts not listed in any previous parts book.
Right and left part numbers are on same line, first number is right, second number is left.
* Indicates change or addition.

Printed in U.S.A.
Prices and specifications subject to change without notice.
March 8, 1963 Supersedes May 1, 1962.

MyMopar.com

CODE	REMARKS		PER CAR	SED.	SP. 4 D.	SUB.	SP. CL. CP.	CV. CP.
23-92-5	PANEL, Door Trim - Cont'd							
	Y1-M (code 511)	Frt.	1	---- ---	2177 220-1	---- ---	2177 130-1	
		Rr.	1	---- ---	2177 222-3			
	(code 512)	Frt.	1	---- ---	2177 227-8	---- ---	2177 135-6	
		Rr.	1	---- ---	2177 229-30			
	(code 513)	Frt.	1	---- ---	2177 234-5	---- ---	2177 140-1	
		Rr.	1	---- ---	2177 236-7			
	(code 514)	Frt.	1	---- ---	2177 241-2	---- ---	2177 145-6	
		Rr.	1	---- ---	2177 243-4			
	(code 515)	Frt.	1	---- ---	2177 248-9	---- ---	2177 150-1	
		Rr.	1	---- ---	2177 250-1			
	(code 516)	Frt.	1	---- ---	2177 253-4	---- ---	2177 155-6	
		Rr.	1	---- ---	2177 255-6			
	Y1-M (code 553)	Frt.	1	---- ---	2177 192-3	---- ---	2177 160-1	2177 160-1
		Rr.	1	---- ---	2177 194-5			
	(code 555)	Frt. Rt.	1	---- ---	2177 199	---- ---	2177 165-6	2177 165-6
		Lt.	1	---- ---	2177 200			
		Rr.	1	---- ---	2177 201-2			
	(code 556)	Frt.	1	---- ---	2177 206-7	---- ---	2177 168-9	2177 168-9
		Rr.	1	---- ---	2177 208-9			
	(code 557)	Frt.	1	---- ---	2177 213-4	---- ---	2177 171-2	2177 171-2
		Rr.	1	---- ---	2177 215-6			
	(code 565)	Frt.	1	---- ---	2178 187-8			
		Rr.	1	---- ---	2177 201-2			
	(code 567)	Frt.	1	---- ---	2178 190-1			
		Rr.	1	---- ---	2177 215-6			
	Y1-H (code 521)	Frt.	1	---- ---	2177 258-9			
		Rr.	1	---- ---	2177 260-1			
	(code 522)	Frt.	1	---- ---	2177 272-3			
		Rr.	1	---- ---	2177 274-5			
	(code 523)	Frt.	1	---- ---	2177 279-80			
		Rr.	1	---- ---	2177 281-2			
	(codes 524, 534)	Frt.	1	---- ---	2177 265-6			
		Rr.	1	---- ---	2177 267-8			
23-92-7	SCREW, Door Trim Panel Attaching C1, C2, C3		4	6000 621	6000 621	6000 621	6000 621	6000 621
23-92-8	FASTENER, Door Trim Panel C1, C2, C3, Y1		★	* 975 633	* 975 633	* 975 633		
23-92-25	RETAINER, Rear Door Trim Panel at Belt Y1		4	---- ---	2161 879			
23-96-3	PANEL, Luggage Compartment Front Lining							
	C1, C2, C3		1	---- ---	---- ---	---- ---	2176 502	2176 502
		(black)	1	2178 600	2178 600	---- ---	2178 825	
	(front lining panel)	(C300-H)	1	---- ---	---- ---	---- ---	---- ---	2178 399
	(rear compartment partition)	(C300-H)	1	---- ---	---- ---	---- ---	2132 612	2132 863
	(rear compartment partition cover)	(C300-H)	1	---- ---	---- ---	---- ---	2132 613	2132 864
	Y1-L, Y1-M	(light gray)	1	---- ---	2169 678	---- ---	2169 678	2175 373
		(dark gray)	1	---- ---	2178 193	---- ---	2178 193	2178 194
23-96-4	MEDALLION, Rear Compartment Partition C2-M		1	---- ---	---- ---	---- ---	1828 420	1828 420

★ Indicates use as required.
⊟ Indicates parts not listed in any previous parts book.
March 8, 1963 Supersedes May 1, 1962.

Printed in U.S.A.
Prices and specifications subject to change without notice.
Right and left part numbers are on same line, first number is right, second number is left.
* Indicates change or addition.

MyMopar.com

CODE	REMARKS	PER CAR	SED.	SP. 4 D.	SUB.	SP. CL. CP.	CV. CP.
23-96-7	BEZEL, Rear Compartment Partition Medallion						
	C2-M (w/studs)	1	---- ---	---- ---	---- ---	2162 250	2162 250
	(w/o studs)	1	---- ---	---- ---	---- ---	2419 083	2419 083
23-96-8	LINING, Luggage Compartment or Wheelhouse Side						
	C1, C2, C3						
	(codes 401, 404, 405, 453, 454, 455, 463)(deck lid hinge cover)	1	---- ---	---- ---	---- ---	---- ---	2132 543-4
	(w/reinf. and extension) (black)	1	2177 901-2	2177 901-2	---- ---	2177 901-2	
	(black)	1	---- ---	---- ---	---- ---	---- ---	2177 907-8
	(code 423) (w/ledge cover) (vinyl)	1	---- ---	---- ---	2132 566-7		
	(codes 424, 425) (w/ledge cover) (vinyl)	1	---- ---	---- ---	2132 541-2		
	(code 423)(carpet)(cordovan)	1	---- ---	---- ---	2178 653-4		
	(code 424)(carpet)(black)	1	---- ---	---- ---	2176 998-9		
	(code 425)(carpet)(black)	1	---- ---	---- ---	2177 000-1		
	(codes 403, 423) (upper) (plastic) (cocoa)	1	---- ---	---- ---	2178 649-50		
	(codes 404, 424) (upper) (plastic) (black)	1	---- ---	---- ---	2169 553-4		
	(codes 405, 425) (upper) (plastic) (red)	1	---- ---	---- ---	2177 004-5		
	(also specify 6000 903 fasteners)						
	Y1 (w/extension) (light gray)	1	---- ---	---- ---	---- ---	2175 369-70	
	(dark gray)						
	Rt.	1	---- ---	---- ---	---- ---	2178 199	
	Lt.	1	---- ---	---- ---	---- ---	2178 200	
	(light gray)	1	---- ---	2175 367-8	---- ---	---- ---	2178 201-2
	(dark gray)	1	---- ---	2178 197-8	---- ---	---- ---	2178 201-2
23-96-9	CLIP, Luggage Compartment Side Lining Retaining						
	C1, C2, C3	★	2165 272	2165 272	---- ---	2165 272	
23-96-10	PANEL, Luggage Compartment Deck Opening Lower						
	Y1 (two piece) (gray)	1	---- ---	2178 207	---- ---	2178 207	2178 207
23-96-22	RETAINER, Rear Compartment Medallion						
	C2-M (C 300)	1	---- ---	---- ---	---- ---	2162 258	2162 258
23-99-4	COVER, Center Pillar Trim						
	C1-L, C2-M, C3-H (paint as req'd) (gray)	1	---- ---	2176 637-8	2176 637-8		
	Y1	1	---- ---	*2179 910-1			
23-99-41	COVER, Pillar Trim Retainer (sold by the inch)						
	Y1 (codes 501, 511, 521) (blue)	★	---- ---	*2177 909			
	(codes 502, 512, 522) (green)	★	---- ---	2177 910			
	(cordovan)	★	---- ---	2177 911			
	(codes 515, 555) (red)	★	---- ---	2177 912			
	(code 553) (tan)	★	---- ---	2177 913			
	(codes 504, 514, 516, 524, 534, 556, 557, 567) (black)	★	---- ---	2176 392			

★ Indicates use as required.
⊟ Indicates parts not listed in any previous parts book.
Right and left part numbers are on same line, first number is right, second number is left.
* Indicates change or addition.

Printed in U.S.A.
Prices and specifications subject to change without notice.
March 8, 1963 Supersedes May 1, 1962.
MyMopar.com

CODE	REMARKS	PER CAR	SED.	SP. 4 D.	SUB.	SP. CL. CP.	CV. CP.
23-101-3	PANEL, Rear Quarter Trim						
	C1-L, C2-M, C3-H						
	(codes 301, 341, 521)	1	*2132 248-9	*2132 302-3			
	(codes 302, 308)	1	2144 275-6	2132 466-7			
	(codes 303, 343, 523)	1	*2132 250-1	*2132 304-5			
	(codes 304, 334, 344, 524)	1	*2132 252-3	*2132 306-7			
	(codes 305, 315, 335, 345, 415, 465)	1	*2132 254-5	*2132 308-9			
	(code 444)	1	2132 762-3				
	(codes 314, 414)	1	---- ---	2132 466-7			
	(codes 313, 413, 453)	1	--------	2132 334-5	---- ---	2177 595-6	2177 613-4
	(code 314)	1	---- ---	---- ---	---- ---	2177 610-1	
	(codes 315, 415)	1	---- ---	---- ---	---- ---	2177 605-6	
	C1-L (codes 301, 341, 401)	1	---- ---	---- ---	---- ---	*2177 064-5	*2177 562-3
	(codes 303, 343)	1	---- ---	---- ---	---- ---	*2177 069-70	
	(code 404)	1	---- ---	---- ---	---- ---	2178 382-3	
	(codes 304, 344, 404)	1	---- ---	---- ---	---- ---	*2177 074-5	*2177 567-8
	(codes 305, 345, 405)	1	---- ---	---- ---	---- ---	*2177 079-80	*2177 570-1
	C2-M (code 454)	1	---- ---	---- ---	---- ---	2177 610-1	2177 618-9
	(code 455)	1	---- ---	---- ---	---- ---	2177 605-6	2177 621-2
	(code 463)	1	---- ---	---- ---	---- ---	2178 360-1	2132 685-6
	(code 302)	1	---- ---	---- ---	---- ---	*2179 594-5	
	(code 308)	1	---- ---	---- ---	---- ---	2179 598-9	
	(also specify 2 of 6000 621 screw) (sp. cl. cp. & conv. cp.)						
	Y1-L (upper) (code 501)	1	---- ---	2177 086-7	---- ---	2177 112-3	
	(code 502)	1	---- ---	2177 093-4	---- ---	2177 117-8	
	(code 503) Rt.	1	---- ---	2177 100	---- ---	2177 122-3	
	Lt.	1	---- ---	2177 101			
	(code 504)	1	---- ---	2177 107-8	---- ---	2177 127-8	
	Y1-M (upper) (code 511)	1	---- ---	2177 224-5			
	(code 512)	1	---- ---	2177 231-2			
	(code 513)	1	---- ---	2177 238-9			
	(code 514)	1	---- ---	2177 245-6			
	(code 515)	1	---- ---	2177 203-4			
	(codes 516, 556)	1	---- ---	2177 210-1			
	Y1-L, Y1-M, Y1-H (lower)						
	(codes 501, 511, 521)	1	---- ---	2177 939-40			
	(codes 502, 512, 522)	1	---- ---	2177 941-2			
	(codes 503, 513, 523)	1	---- ---	2177 943-4			
	(codes 504, 514, 534)	1	---- ---	2177 945-6			
	Y1-M (code 511)	1	---- ---	---- ---	---- ---	2177 132-3	
	(code 512)	1	---- ---	---- ---	---- ---	2177 137-8	
	(code 513)	1	---- ---	---- ---	---- ---	2177 142-3	
	(code 514)	1	---- ---	---- ---	---- ---	2177 147-8	
	(codes 515, 555, 565)	1	---- ---	2177 203-4	---- ---	2177 152-3	2177 181-2
	(codes 516, 556)	1	---- ---	---- ---	---- ---	2177 157-8	
	(code 553)	1	---- ---	2177 196-7	---- ---	2177 162-3	2177 178-9
	Y1-L, Y1-M, Y1-H (lower)						
	(codes 557, 567)	1	---- ---	2177 217-8	---- ---	---- ---	2177 187-8
	Y1-H (code 521)	1	---- ---	2177 262-3			
	(code 522)	1	---- ---	2177 276-7			
	(code 523)	1	---- ---	2177 283-4			
	(codes 524, 534)	1	---- ---	2177 269-70			
	Y1-M (lower)						
	(code 553)	1	---- ---	---- ---	---- ---	---- ---	2177 178-9
	(codes 515, 555)	1	---- ---	---- ---	---- ---	---- ---	2177 181-2
	(codes 516, 556)	1	---- ---	---- ---	---- ---	---- ---	2177 184-5
	(code 557)	1	---- ---	---- ---	---- ---	2177 173-4	

★ Indicates use as required.
⊟ Indicates parts not listed in any previous parts book.
March 8, 1963 Supersedes May 1, 1962.

Printed in U.S.A.
Prices and specifications subject to change without notice.
Right and left part numbers are on same line, first number is right, second number is left.
* Indicates change or addition.

MyMopar.com

CODE	REMARKS	PER CAR	SED.	SP. 4 D.	SUB.	SP. CL. CP.	CV. CP.
23-101-32	SPACER, Quarter Trim Panel to Inner Panel						
	C1-L, C2-M	2	---- ---	---- ---	---- ---	---- ---	1964 348
23-102-3	PANEL, Shelf Trim (paint as required)						
	C1-L (codes 302, 308, 341, 343, 344, 345)	1	*1974 843	*1974 843			
	(codes 334, 335, 464, 465)	1	*2178 328	*2178 328			
	C1-L, C2-M, C3-H(w/extension)	1	2178 726	2178 726	---- ---	2178 715	
	C1-L, C2-M, C3-H (extension)	1	*2173 047	*2173 047	---- ---	*2173 047	
	C1-L, C2-M (codes 302, 305, 308, 314, 404, 454)	1	*2174 648	*2174 648	---- ---	*2174 648	
	Y1-1 (also specify 2 of 6000 903 fasteners)	1	---- ---	---- ---	---- ---	2169 716	
23-103-3	PANEL, Visor Trim						
	C1-L, C2-M, C3-H						
	(codes 301, 331, 341) (blue)	2	*2178 301	*2178 301	---- ---	*2178 301	
	(codes 303, 333, 343) (cocoa)	2	*2178 302	*2178 302	---- ---	*2178 302	
	(codes 304, 314, 334, 344, 403, 404, 405, 414, 423, 424, 425, 454, 464) (gray)	2	*2178 304	*2178 304	---- ---	*2178 304	
	(codes 305, 315, 335, 345, 415, 455, 465) (red) (long)	2	*2178 305	*2178 305	---- ---	*2178 305	
	(codes 313,413,453,463)(tan)	2	---- ---	2178 837	---- ---	2178 837	
	(code 401) (blue)	2	---- ---	---- ---	---- ---	---- ---	2176 704
	(codes 404, 454) (black)	2	---- ---	---- ---	---- ---	---- ---	2174 277
	(codes 405, 455) (red)	2	---- ---	---- ---	---- ---	---- ---	2176 705
	(code 453) (gold)	2	---- ---	---- ---	---- ---	---- ---	2178 838
	(code 454) (gray)	2	---- ---	---- ---	---- ---	---- ---	2176 707
	(codes 304, 334, 344, 403, 404, 405, 423, 424, 425, 444)(police, ambulance & limo.) (short)	2	*2178 393	---- ---	*2178 393		
	(vinyl)(long)	2	2178 304	---- ---	2178 304		
	(codes 403, 404, 405, 423, 424, 425)(printed and perf. hardboard)	2	---- ---	---- ---	2179 401		
	(padded) (white)	2	*2212 272	*2212 272	*2212 272	*2212 272	
	(white)	2	2298 648	2298 648	2298 648	2298 648	
	C1-L, C2-M, C3-H						
	(codes 313, 413, 453, 463) (tan)	2	---- ---	*2178 303	---- ---	*2178 303	
	(codes 301, 331, 344) (short visor) (blue)	2	*2178 388				
	(codes 303, 333, 343) (short visor) (beige)	2	*2178 389				
	(codes 304, 334, 444) (short visor) (gray)	2	2178 393				
	C1-L (code 302) (lime green)	2	2180 051	2180 051	---- ---	2180 051	
	(code 308) (turquoise)	2	*2180 052	*2180 052	---- ---	*2180 052	
	Y1-L, Y1-M, Y1-H						
	(codes 501, 511) (blue)	1	---- ---	2178 173	---- ---	2178 173	
	(codes 502, 512, 522) (green)	1	---- ---	2178 174	---- ---	2178 174	
	(codes 503, 513, 523) (beige)	1	---- ---	2178 175	---- ---	2178 175	
	(codes 504, 514, 516, 524, 534, 556) (gray)	1	---- ---	2178 176	---- ---	2178 176	
	(code 553) (tan)	1	---- ---	2178 178	---- ---	2178 178	2177 356
	(code 555) (red)	1	---- ---	2178 177	---- ---	2178 177	2177 357
	(code 557)	1	---- ---	2178 179	---- ---	2178 179	
	(codes 556, 557)	1	---- ---	---- ---	---- ---	---- ---	2172 758

★ Indicates use as required.
⊟ Indicates parts not listed in any previous parts book.
Right and left part numbers are on same line, first number is right, second number is left.
* Indicates change or addition.

Printed in U.S.A.
Prices and specifications subject to change without notice.
March 8, 1963 Supersedes May 1, 1962.

MyMopar.com

CODE	REMARKS	PER CAR	SED.	SP. 4 D.	SUB.	SP. CL. CP.	CV. CP.
23-103-10	ARM and BRACKET, Visor						
	C1, C2, C3 (chrome)	1	2292 108-9	2292 108-9	2292 108-9	2292 108-9	
	(for padded visor)	1	2082 676-7	---- ---	2082 676-7		
	Y1	1	---- ---	2085 242-3	---- ---	2085 242-3	2161 588-9
	(attaching screw)	6	187 709	187 709	187 709	187 709	
23-103-34	SPRING, w/HOOK, Windshield Upper Garnish Moulding Visor						
	C1, C2, C3	1	1964 262	1964 262	1964 262	1964 262	1964 332
	Y1	2	---- ---	1900 776	---- ---	1900 776	
	(attaching screw)	2	148 095	148 095	148 095	148 095	
23-103-37	SPACER, Visor Support Hook						
	C1, C2, C3	2	2165 039	2165 039	2165 039	2165 039	
23-103-48	SUPPORT, Visor Inner						
	C1, C2, C3	2	2193 096	2193 096	2193 096	2193 096	2193 096
	Y1	2	---- ---	2161 687	---- ---	2161 687	
23-108-4	CUSHION, Front Seat						
	C1-L (manual) (code 301)	1	2131 493	2131 493	---- ---	2131 566	
	(code 302)	1	2132 871	2132 871	---- ---	2132 910	
	(w/airfoam)	1	2132 892	2132 892	---- ---	2132 930	
	(6 way elec.)	1	2132 885	2132 885	---- ---	2132 924	
	(6 way elec. w/airfoam)	1	2132 896	2132 896	---- ---	2132 934	
	(code 308)	1	2132 872	2132 872	---- ---	2132 911	
	(w/airfoam)	1	2132 893	2132 893	---- ---	2132 931	
	(6 way elec.)	1	2132 886	2132 886	---- ---	2132 925	
	(6 way elec. w/airfoam)	1	2132 897	2132 897	---- ---	2132 935	
	C1-L (manual)						
	(code 303)	1	2131 494	2131 494	---- ---	2131 567	
	(code 304)	1	2131 495	2131 495	---- ---	2131 568	
	(code 305)	1	2131 496	2131 496	---- ---	2131 569	
	C1-L (manual w/airfoam)						
	(code 301)	1	2131 533	2131 533	---- ---	2131 610	
	(code 303)	1	2131 534	2131 534	---- ---	2131 611	
	(code 304)	1	2131 535	2131 535	---- ---	2131 612	
	(code 305)	1	2131 536	2131 536	---- ---	2131 613	
	C1-L (6 way elec.)(code 301)	1	2131 529	2131 529	---- ---	2131 606	
	(code 303)	1	2131 530	2131 530	---- ---	2131 607	
	(code 304)	1	2131 531	2131 531	---- ---	2131 608	
	(code 305)	1	2131 532	2131 532	---- ---	2131 609	
	C1-L (6 way elec. w/airfoam)						
	(code 301)	1	2131 537	2131 537	---- ---	2131 614	
	(code 303)	1	2131 538	2131 538	---- ---	2131 615	
	(code 304)	1	2131 539	2131 539	---- ---	2131 616	
	(code 305)	1	2131 540	2131 540	---- ---	2131 617	
	C1-L (police car)						
	(code 301)	1	2132 788				
	(code 303)	1	2132 789				
	(code 304)	1	2132 790				
	(code 305)	1	2132 791				
	(code 444)	1	2132 771				
	C1-L (manual)						
	(code 341)	1	*2144 356	*2144 356	---- ---	*2144 332	
	(code 343)	1	*2144 357	*2144 357	---- ---	*2144 333	
	(code 344)	1	*2144 358	*2144 358	---- ---	*2144 334	
	(code 345)	1	---- ---	---- ---	---- ---	*2144 335	
	C1-L (w/airfoam pad)						
	(code 341)	1	*2144 380	*2144 380	---- ---	*2144 408	
	(code 343)	1	*2144 381	*2144 381	---- ---	*2144 409	
	(code 344)	1	*2144 382	*2144 382	---- ---	*2144 410	
	(code 345)	1	*2144 383	*2144 383	---- ---	*2144 411	

★ Indicates use as required.
⊟ Indicates parts not listed in any previous parts book.
March 8, 1963 Supersedes May 1, 1962.

Printed in U.S.A.
Prices and specifications subject to change without notice.
Right and left part numbers are on same line, first number is right, second number is left.
* Indicates change or addition.

MyMopar.com

CODE	REMARKS	PER CAR	SED.	SP. 4D.	SUB.	SP. CL. CP.	CV. CP.
23-108-4	CUSHION, Front Seat - Cont'd						
	C1-L (6 way elec.)						
	(code 341)	1	*2144 368	*2144 368	---- ---	*2144 396	
	(code 343)	1	*2144 369	*2144 369	---- ---	*2144 397	
	(code 344)	1	*2144 370	*2144 370	---- ---	*2144 398	
	(code 345)	1	*2144 371	*2144 371	---- ---	*2144 399	
	C1-L (6 way elec. w/airfoam pad)						
	(code 341)	1	*2144 388	*2144 388	---- ---	*2144 416	
	(code 343)	1	*2144 389	*2144 389	---- ---	*2144 417	
	(code 344)	1	*2144 390	*2144 390	---- ---	*2144 418	
	(code 345)	1	*2144 391	*2144 391	---- ---	*2144 419	
	C2-M (manual) (code 313)	1	---- ---	2131 733	---- ---	2131 810	
	(code 314)	1	---- ---	2131 734	---- ---	2131 811	
	(code 315)	1	---- ---	2131 735	---- ---	2131 812	
	C2-M (6 way elec.) (code 313)	1	---- ---	2131 754	---- ---	2131 831	
	(code 314)	1	---- ---	2131 755	---- ---	2131 832	
	(code 315)	1	---- ---	2131 756	---- ---	2131 833	
	C3-H (manual) (code 331)	1	2132 274	2132 274			
	(code 333)	1	2132 275	2132 275			
	(code 334)	1	2132 276	2132 276			
	(code 335)	1	2132 277	2132 277			
	C3-H (6 way elec.) (code 331)	1	2132 325	2132 325			
	(code 333)	1	2132 326	2132 326			
	(code 334)	1	2132 327	2132 327			
	(code 335)	1	2132 328	2132 328			
	C1-L, C2-M, C3-H (manual)						
	(codes 403, 423)	1	---- ---	---- ---	2132 590		
	(code 413)	1	---- ---	2131 877			
	(codes 404, 414, 424)	1	---- ---	2131 878	2131 878	2131 929	2131 929
	(codes 405, 415, 425, 465)	1	---- ---	2131 879	2131 879	2131 930	2131 930
	(code 453)	2	---- ---	---- ---	---- ---	2132 714	2132 714
	(code 454)	2	---- ---	---- ---	---- ---	2132 716	2132 716
	(code 455)	2	---- ---	2132 718	---- ---	2132 718	2132 718
	C1-L, C2-M, C3-H (6 way elec.)						
	(codes 403, 423)	1	---- ---	---- ---	2132 601		
	(code 413)	1	---- ---	2131 898			
	(codes 404, 414, 424, 464)	1	---- ---	2131 899	2131 899	2131 950	2131 950
	(codes 405, 415, 425, 465)	1	---- ---	2131 900	2131 900	2131 951	2131 951
	(code 463)	1	---- ---	---- ---	---- ---	2132 654-5	2132 654-5
	C2-M (code 453)	1	---- ---	---- ---	---- ---	2132 424-5	2132 424-5
	Center	1	---- ---	---- ---	---- ---	2132 436	2132 436
	(code 454)	1	---- ---	---- ---	---- ---	2132 426-7	2132 426-7
	Center	1	---- ---	---- ---	---- ---	2132 437	2132 437
	(code 455) Rt.	1	---- ---	---- ---	---- ---	*2132 428	*2132 428
	Lt.	1	---- ---	---- ---	---- ---	*2132 718	*2132 718
	Center	1	---- ---	---- ---	---- ---	2132 438	2132 438
	C1-L (manual) (code 401)	1	---- ---	---- ---	---- ---	---- ---	2131 928
	(code 404)	1	---- ---	---- ---	---- ---	---- ---	2131 929
	(code 405)	1	---- ---	---- ---	---- ---	---- ---	2131 930
	C1-L (6 way elec.) (code 401)	1	---- ---	---- ---	---- ---	---- ---	2131 949
	(code 404)	1	---- ---	---- ---	---- ---	---- ---	2131 950
	(code 405)	1	---- ---	---- ---	---- ---	---- ---	2131 951
	C3-H (parts used in C1-L ambulance)						
	(codes 403, 423)	1	---- ---	---- ---	2132 809		
	(codes 404, 424)	1	---- ---	---- ---	2132 810		
	(codes 405, 425)	1	---- ---	---- ---	2132 811		

★ Indicates use as required.
⊟ Indicates parts not listed in any previous parts book.
Right and left part numbers are on same line, first number is right, second number is left.
* Indicates change or addition.

Printed in U.S.A.
Prices and specifications subject to change without notice.
March 8, 1963 Supersedes May 1, 1962.

MyMopar.com

CODE	REMARKS	PER CAR	SED.	SP. 4 D.	SUB.	SP. CL. CP.	CV. CP.
23-108-4	CUSHION, Front Seat - Cont'd						
	Y1-L (code 501)	1	---- ---	*2148 670	---- ---	*2148 750	
	(code 502)	1	---- ---	2148 671	---- ---	2148 751	
	(code 503)	1	---- ---	2148 672	---- ---	2148 752	
	(code 504)	1	---- ---	2148 673	---- ---	2148 753	
	Y1-L (6 way elec.) (code 501)	1	---- ---	2148 674	---- ---	2148 754	
	(code 502)	1	---- ---	2148 675	---- ---	2148 755	
	(code 503)	1	---- ---	2148 676	---- ---	2148 756	
	(code 504)	1	---- ---	2148 677	---- ---	2148 757	
	Y1-M (code 511)	1	---- ---	*2149 122	---- ---	*2148 814	
	(code 512)	1	---- ---	2149 123	---- ---	2148 815	
	(code 513)	1	---- ---	2149 124	---- ---	2148 816	
	(code 514)	1	---- ---	2149 125	---- ---	2148 817	
	(code 515)	1	---- ---	2149 126	---- ---	2148 818	
	(code 516)	1	---- ---	2149 127	---- ---	2148 819	
	Y1-H (code 521)	1	---- ---	*2149 900			
	(code 522)	1	---- ---	2149 318			
	(code 523)	1	---- ---	2149 319			
	(code 524)	1	---- ---	2149 320			
	(code 534)	1	---- ---	2149 317			
	Y1-M (code 553)	1	---- ---	*2149 128	---- ---	*2148 824	*2148 824
	(codes 555, 565)	1	---- ---	2149 129	---- ---	2148 825	2148 825
	(code 556)	1	---- ---	2149 130	---- ---	2148 826	2148 826
	(codes 557, 567)	1	---- ---	2149 131	---- ---	2148 827	2148 827
23-108-5	COVER, Front Seat Cushion						
	C1-L (code 301)	1	2131 497	2131 497	---- ---	2131 570	
	(code 302)	1	2132 873	2132 873	---- ---	2132 912	
	(code 303)	1	2131 498	2131 498	---- ---	2131 571	
	(code 304)	1	2131 499	2131 499	---- ---	2131 572	
	(code 305)	1	2131 500	2131 500	---- ---	2131 573	
	(code 308)	1	2132 874	2132 874	---- ---	2132 913	
	C1-L (code 341)	1	*2144 292	*2144 292	---- ---	*2144 336	
	(code 343)	1	*2144 293	*2144 293	---- ---	*2144 337	
	(code 344)	1	*2144 294	*2144 294	---- ---	*2144 338	
	(code 345)	1	*2144 295	*2144 295	---- ---	*2144 339	
	C3-H (code 331)	1	2132 278	2132 278			
	(code 333)	1	2132 279	2132 279			
	(code 334)	1	2132 280	2132 280			
	(code 335)	1	2132 281	2132 281			
	C2-M (code 313)	1	---- ---	2131 736	---- ---	2131 813	
	(code 314)	1	---- ---	2131 737	---- ---	2131 814	
	(code 315)	1	---- ---	2131 738	---- ---	2131 815	
	C1-L, C2-M, C3-H						
	(codes 403, 423)	1	---- ---	---- ---	2132 591		
	(code 413)	1	---- ---	2131 880			
	(codes 404, 414, 424, 464)	1	---- ---	2131 881	2131 881		
	(codes 405, 415, 425, 465)	1	---- ---	2131 882	2131 882		
	(code 463)	1	---- ---	---- ---	---- ---	2132 674	2132 674
	C2-M (code 453)	2	---- ---	---- ---	---- ---	2132 727	2132 727
	Center	1	---- ---	---- ---	---- ---	2132 439	2132 439
	(code 454)	2	---- ---	---- ---	---- ---	*2132 729	*2132 729
	Center	1	---- ---	---- ---	---- ---	2132 440	2132 440
	(code 455)	2	---- ---	---- ---	---- ---	2132 731	2132 731
	Center	1	---- ---	---- ---	---- ---	2132 441	2132 441
	C1-L (code 401)	1	---- ---	---- ---	---- ---	---- ---	2131 931
	(code 404)	1	---- ---	---- ---	---- ---	---- ---	2131 932
	(code 405)	1	---- ---	---- ---	---- ---	---- ---	2131 933
	C1-L (police)						
	(code 444)	1	2132 772				

★ Indicates use as required.
⊟ Indicates parts not listed in any previous parts book.
March 8, 1963 Supersedes May 1, 1962.

Printed in U.S.A.
Prices and specifications subject to change without notice.
Right and left part numbers are on same line, first number is right, second number is left.
* Indicates change or addition.

MyMopar.com

CODE	REMARKS	PER CAR	SED.	SP. 4 D.	SUB.	SP. CL. CP.	CV. CP.
23-108-5	COVER, Front Seat Cushion-Cont'd						
	Y1-L (code 501)	1	---- ---	2148 666	---- ---	2148 746	
	(code 502)	1	---- ---	2148 667	---- ---	2148 747	
	(code 503)	1	---- ---	2148 668	---- ---	2148 748	
	(code 504)	1	---- ---	2148 669	---- ---	2148 749	
	Y1-M (code 511)	1	---- ---	2149 112	---- ---	2148 808	
	(code 512)	1	---- ---	2149 113	---- ---	2148 809	
	(code 513)	1	---- ---	2149 114	---- ---	2148 810	
	(code 514)	1	---- ---	2149 115	---- ---	2148 811	
	(code 515)	1	---- ---	2149 116	---- ---	2148 812	
	(code 516)	1	---- ---	2149 117	---- ---	2148 813	
	(code 553)	1	---- ---	2149 118	---- ---	2148 820	2148 820
	(codes 555, 565)	1	---- ---	2149 119	---- ---	2148 821	2148 821
	(code 556)	1	---- ---	2149 120	---- ---	2148 822	2148 822
	(codes 557, 567)	1	---- ---	2149 121	---- ---	2148 823	2148 823
	Y1-H (code 521)	1	---- ---	2149 904			
	(code 522)	1	---- ---	2149 313			
	(code 523)	1	---- ---	2149 314			
	(code 524)	1	---- ---	2149 315			
	(code 534)	1	---- ---	2149 312			
23-108-12	BACK, Front Seat (less cushion)						
	C1-L						
	(code 302)	1	2132 867	2132 867	---- ---	2132 902-3	
	(code 308)	1	2132 868	2132 868	---- ---	2132 904-5	
	C1-L (w/seat back insert)						
	(code 301)	1	*2131 485	*2131 485	---- ---	*2131 550-1	
	(code 303)	1	*2131 486	*2131 486	---- ---	*2131 552-3	
	(code 304)	1	*2131 487	*2131 487	---- ---	*2131 554-5	
	(code 305)	1	*2131 488	*2131 488	---- ---	*2131 556-7	
	C1-L (less seat back insert)						
	(code 301)	1	*2144 424	*2144 424	---- ---	*2144 456-7	
	(code 303)	1	*2144 425	*2144 425	---- ---	*2144 458-9	
	(code 304)	1	*2144 426	*2144 426	---- ---	*2144 460-1	
	(code 305)	1	*2144 427	*2144 427	---- ---	*2144 462-3	
	C1-L (w/seat back insert)						
	(code 341)	1	*2144 281	*2144 281	---- ---	*2144 316-7	
	(code 343)	1	*2144 282	*2144 282	---- ---	*2144 318-9	
	(code 344)	1	*2144 283	*2144 283	---- ---	*2144 320-1	
	(code 345)	1	*2144 284	*2144 284	---- ---	*2144 322-3	
	C1-L (less seat back insert)						
	(code 341)	1	*2144 504	*2144 504	---- ---	*2144 536-7	
	(code 343)	1	*2144 505	*2144 505	---- ---	*2144 538-9	
	(code 344)	1	*2144 506	*2144 506	---- ---	*2144 540-1	
	(code 345)	1	*2144 507	*2144 507	---- ---	*2144 542-3	
	C1-L (police)(w/seat back insert)						
	(code 301)	1	*2132 781				
	(code 303)	1	*2132 782				
	(code 304)	1	*2132 783				
	(code 305)	1	*2132 784				
	C1-L (police)(less seat back insert)						
	(code 301)	1	*2144 448				
	(code 303)	1	*2144 449				
	(code 304)	1	*2144 450				
	(code 305)	1	*2144 451				
	(code 444)	1	*2132 769				
23-108-13	FRAME, Front Seat Back (trimmed)						
	Y1-L (code 501)	1	---- ---	2148 682			
	(code 502)	1	---- ---	2148 683			
	(code 503)	1	---- ---	2148 684			
	(code 504)	1	---- ---	2148 685			

★ Indicates use as required.
⊟ Indicates parts not listed in any previous parts book.
Right and left part numbers are on same line, first number is right, second number is left.
* Indicates change or addition.

Printed in U.S.A.
Prices and specifications subject to change without notice.
March 8, 1963 Supersedes May 1, 1962.

MyMopar.com

CODE	REMARKS		PER CAR	SED.	SP. 4 D.	SUB.	SP. CL. CP.	CV. CP.
23-108-13	FRAME, Front Seat Back (trimmed) - Cont'd							
	Y1-L (code 501)	Rt.	1	---- ---	---- ---	---- ---	2148 766	
		Lt.	1	---- ---	---- ---	---- ---	2148 770	
	(code 502)	Rt.	1	---- ---	---- ---	---- ---	2148 767	
		Lt.	1	---- ---	---- ---	---- ---	2148 771	
	(code 503)	Rt.	1	---- ---	---- ---	---- ---	2148 768	
		Lt.	1	---- ---	---- ---	---- ---	2148 772	
	(code 504)	Rt.	1	---- ---	---- ---	---- ---	2148 769	
		Lt.	1	---- ---	---- ---	---- ---	2148 773	
	Y1-M (code 511)		1	---- ---	2149 170			
	(code 512)		1	---- ---	2149 171			
	(code 513)		1	---- ---	2149 172			
	(code 514)		1	---- ---	2149 173			
	(code 515)		1	---- ---	2149 174			
	(code 516)		1	---- ---	2149 175			
	Y1-M (code 511)	Rt.	1	---- ---	---- ---	---- ---	2148 848	
		Lt.	1	---- ---	---- ---	---- ---	2148 854	
	(code 512)	Rt.	1	---- ---	---- ---	---- ---	2148 849	
		Lt.	1	---- ---	---- ---	---- ---	2148 855	
	(code 513)	Rt.	1	---- ---	---- ---	---- ---	2148 850	
		Lt.	1	---- ---	---- ---	---- ---	2148 856	
	(code 514)	Rt.	1	---- ---	---- ---	---- ---	2148 851	
		Lt.	1	---- ---	---- ---	---- ---	2148 857	
	(code 515)	Rt.	1	---- ---	---- ---	---- ---	2148 852	
		Lt.	1	---- ---	---- ---	---- ---	2148 858	
	(code 516)	Rt.	1	---- ---	---- ---	---- ---	2148 853	
		Lt.	1	---- ---	---- ---	---- ---	2148 859	
	(code 553)		1	---- ---	2149 176			
	(codes 555, 565)		1	---- ---	2149 177			
	(codes 557, 567)		1	---- ---	2149 179			
	Y1-H (code 521)		1	---- ---	2149 337			
	(code 522)		1	---- ---	2149 338			
	(code 523)		1	---- ---	2149 339			
	(codes 524, 534)		1	---- ---	2149 340			
	Y1-M (code 553)	Rt.	1	---- ---	---- ---	---- ---	2148 860	
		Lt.	1	---- ---	---- ---	---- ---	2148 864	
	(code 555)	Rt.	1	---- ---	---- ---	---- ---	2148 861	
		Lt.	1	---- ---	---- ---	---- ---	2148 865	
	(code 556)	Rt.	1	---- ---	---- ---	---- ---	2148 862	
		Lt.	1	---- ---	---- ---	---- ---	2148 866	
	(code 557)	Rt.	1	---- ---	---- ---	---- ---	2148 863	
		Lt.	1	---- ---	---- ---	---- ---	2148 867	
23-108-15	SPRING and COVER, Front Seat Back							
	C3-H (code 331)		1	2132 264	2132 264			
	(code 333)		1	2132 265	2132 265			
	(code 334)		1	2132 266	2132 266			
	(code 335)		1	2132 267	2132 267			
	C2-M (code 313)		1	---- ---	2131 724			
	(code 314)		1	---- ---	2131 725			
	(code 315)		1	---- ---	2131 726			
	C1-L, C2-M, C3-H, (code 413)		1	---- ---	2131 868			
	(codes 404, 414, 424)		1	---- ---	2131 869	2131 869	2131 912-3	2131 912-3
	(codes 405, 415, 425, 465)		1	---- ---	2131 870	2131 870	2131 914-5	2131 914-5
	(codes 403, 423)		1	---- ---	---- ---	2132 587		
	(code 463)		2	---- ---	---- ---	---- ---	2132 639	2132 639
	C2-M (code 313)	Rt.	1	---- ---	---- ---	---- ---	2131 792	
		Lt.	1	---- ---	---- ---	---- ---	2131 793	
	(code 314)	Rt.	1	---- ---	---- ---	---- ---	2131 794	
		Lt.	1	---- ---	---- ---	---- ---	2131 795	

★ Indicates use as required.
⊟ Indicates parts not listed in any previous parts book.
March 8, 1963 Supersedes May 1, 1962.

Printed in U.S.A.
Prices and specifications subject to change without notice.
Right and left part numbers are on same line, first number is right, second number is left.
* Indicates change or addition.

MyMopar.com

CODE	REMARKS		PER CAR	SED.	SP. 4 D.	SUB.	SP. CL. CP.	CV. CP.
23-108-15	SPRING and COVER, Front Seat Back - Cont'd							
	C2-M (code 315)	Rt.	1	---- ---	---- ---	---- ---	2131 796	
		Lt.	1	---- ---	---- ---	---- ---	2131 797	
	(code 453)		2	---- ---	---- ---	---- ---	2132 409	2132 409
	(code 454)		2	---- ---	---- ---	---- ---	2132 410	2132 410
	(code 455)		2	---- ---	---- ---	---- ---	2132 411	2132 411
	C1-L (code 401)	Rt.	1	---- ---	---- ---	---- ---	---- ---	2131 910
		Lt.	1	---- ---	---- ---	---- ---	---- ---	2131 911
	(code 404)	Rt.	1	---- ---	---- ---	---- ---	---- ---	2131 912
		Lt.	1	---- ---	---- ---	---- ---	---- ---	2131 913
	(code 405)	Rt.	1	---- ---	---- ---	---- ---	---- ---	2131 914
		Lt.	1	---- ---	---- ---	---- ---	---- ---	2131 915
	Y1-L (code 501)		1	---- ---	2148 690			
	(code 502)		1	---- ---	2148 691			
	(code 503)		1	---- ---	2148 692			
	(code 504)		1	---- ---	2148 693			
	Y1-L (code 501)	Rt.	1	---- ---	---- ---	---- ---	2148 782	
		Lt.	1	---- ---	---- ---	---- ---	2148 786	
	(code 502)	Rt.	1	---- ---	---- ---	---- ---	2148 783	
		Lt.	1	---- ---	---- ---	---- ---	2148 787	
	(code 503)	Rt.	1	---- ---	---- ---	---- ---	2148 784	
		Lt.	1	---- ---	---- ---	---- ---	2148 788	
	(code 504)	Rt.	1	---- ---	---- ---	---- ---	2148 785	
		Lt.	1	---- ---	---- ---	---- ---	2148 789	
	Y1-M (code 511)		1	---- ---	2149 190			
	(code 512)		1	---- ---	2149 191			
	(code 513)		1	---- ---	2149 192			
	(code 514)		1	---- ---	2149 193			
	(code 515)		1	---- ---	2149 194			
	(code 516)		1	---- ---	2149 195			
	(code 553)		1	---- ---	2149 196			
	(codes 555, 565)		1	---- ---	2149 197			
	(code 556)		1	---- ---	2149 198			
	(codes 557, 567)		1	---- ---	2149 199			
	Y1-M (code 553)	Rt.	1	---- ---	---- ---	---- ---	2148 900	
		Lt.	1	---- ---	---- ---	---- ---	2148 904	
	(code 555)	Rt.	1	---- ---	---- ---	---- ---	2148 901	
		Lt.	1	---- ---	---- ---	---- ---	2148 905	
	(code 556)	Rt.	1	---- ---	---- ---	---- ---	2148 902	
		Lt.	1	---- ---	---- ---	---- ---	2148 906	
	(code 557)	Rt.	1	---- ---	---- ---	---- ---	2148 903	
		Lt.	1	---- ---	---- ---	---- ---	2148 907	
	Y1-H (code 521)		1	---- ---	2149 897			
	(code 522)		1	---- ---	2149 348			
	(code 523)		1	---- ---	2149 349			
	(code 524)		1	---- ---	2149 350			
	(code 534)		1	---- ---	2149 347			
23-108-16	COVER, Front Seat Back							
	C1-L (code 302)		1	2132 869	2132 869	---- ---	2132 906-7	
	(code 308)		1	2132 870	2132 870	---- ---	2132 908-9	
	C1-L (w/seat back insert)							
	(code 301)		1	*2131 489	*2131 489	---- ---	*2131 558-9	
	(code 303)		1	*2131 490	*2131 490	---- ---	*2131 560-1	
	(code 304)		1	*2131 491	*2131 491	---- ---	*2131 562-3	
	(code 305)		1	*2131 492	*2131 492	---- ---	*2131 564-5	

★ Indicates use as required.
⊟ Indicates parts not listed in any previous parts book.
Right and left part numbers are on same line, first number is right, second number is left.
* Indicates change or addition.

Printed in U.S.A.
Prices and specifications subject to change without notice.
March 8, 1963 Supersedes May 1, 1962.

MyMopar.com

CODE	REMARKS	PER CAR	SED.	SP. 4D.	SUB.	SP. CL. CP.	CV. CP.
23-108-16	COVER, Front Seat Back - Cont'd						
	C1-L (less seat back insert)						
	(code 301)	1	*2144 428	*2144 428	---- ---	*2144 464-5	
	(code 303)	1	*2144 429	*2144 429	---- ---	*2144 466-7	
	(code 304)	1	*2144 430	*2144 430	---- ---	*2144 468-9	
	(code 305)	1	*2144 431	*2144 431	---- ---	*2144 470-1	
	C2-M (code 313)	1	---- ---	2131 727	---- ---	2131 798-9	
	(code 314)	1	---- --	2131 728	---- ---	2131 800-1	
	(code 315)	1	---- ---	2131 729	---- ---	2131 802-3	
	C1-L (code 401)	1	---- ---	---- ---	---- ---	---- ---	2131 916-7
	(code 404)	1	---- ---	---- ---	---- ---	2131 918-9	2131 918-9
	(code 405)	1	---- ---	---- ---	---- ---	2131 920-1	2131 920-1
	(code 331)	1	2132 268	2132 268			
	(code 333)	1	2132 269	2132 269			
	(code 334)	1	2132 270	2132 270			
	(code 335)	1	2132 271	2132 271			
	C1-L (w/seat back insert)						
	(code 341)	1	*2144 285	*2144 285	---- ---	*2144 324-5	
	(code 343)	1	*2144 286	*2144 286	---- ---	*2144 326-7	
	(code 344)	1	*2144 287	*2144 287	---- ---	*2144 328-9	
	(code 345)	1	*2144 288	*2144 288	---- ---	*2144 330-1	
	C1-L (less seat back insert)						
	(code 341)	1	*2144 508	*2144 508	---- ---	*2144 544-5	
	(code 343)	1	*2144 509	*2144 509	---- ---	*2144 546-7	
	(code 344)	1	*2144 510	*2144 510	---- ---	*2144 548-9	
	(code 345)	1	*2144 511	*2144 511	---- ---	*2144 550-1	
	C1, C2, C3, (code 413)	1	---- ---	2131 871			
	(codes 404, 414, 424, 464)	1	---- ---	*2131 872	*2131 872		
	(codes 405, 415, 425, 465)	1	---- ---	2131 873	2131 873		
	(codes 403, 423)	1	---- ---	---- ---	2132 588		
	C2-M (code 453)	2	---- ---	*2132 412	---- ---	2132 412	2132 412
	(code 454)	2	---- ---	*2132 413	---- ---	2132 413	2132 413
	(code 455)	2	---- ---	*2132 414	---- ---	2132 414	2132 414
	(code 463)	2	---- ---	---- ---	---- ---	2132 650	2132 650
	Y1-L (code 501)	1	---- ---	2148 686			
	(code 502)	1	---- ---	2148 687			
	(code 503)	1	---- ---	2148 688			
	(code 504)	1	---- ---	2148 689			
	Y1-L (code 501) Rt.	1	---- ---	---- ---	---- ---	2148 774	
	Lt.	1	---- ---	---- ---	---- ---	2148 778	
	(code 502) Rt.	1	---- ---	---- ---	---- ---	2148 775	
	Lt.	1	---- ---	---- ---	---- ---	2148 779	
	(code 503) Rt.	1	---- ---	---- ---	---- ---	2148 776	
	Lt.	1	---- ---	---- ---	---- ---	2148 780	
	(code 504) Rt.	1	---- ---	---- ---	---- ---	2148 777	
	Lt.	1	---- ---	---- ---	---- ---	2148 781	
	Y1-M (code 511)	1	---- ---	2149 180			
	(code 512)	1	---- ---	2149 181			
	(code 513)	1	---- ---	2149 182			
	(code 514)	1	---- ---	2149 183			
	(code 515)	1	---- ---	2149 184			
	(code 516)	1	---- ---	2149 185			
	Y1-M (code 511) Rt.	1	---- ---	---- ---	---- ---	2148 868	
	Lt.	1	---- ---	---- ---	---- ---	2148 874	
	(code 512) Rt.	1	---- ---	---- ---	---- ---	2148 869	
	Lt.	1	---- ---	---- ---	---- ---	2148 875	
	(code 513) Rt.	1	---- ---	---- ---	---- ---	2148 870	
	Lt.	1	---- ---	---- ---	---- ---	2148 876	
	(code 514) Rt.	1	---- ---	---- ---	---- ---	2148 871	
	Lt.	1	---- ---	---- ---	---- ---	2148 877	

★ Indicates use as required.
⊟ Indicates parts not listed in any previous parts book.
March 8, 1963 Supersedes May 1, 1962.

Printed in U.S.A.
Prices and specifications subject to change without notice.
Right and left part numbers are on same line, first number is right, second number is left.
* Indicates change or addition.

MyMopar.com

CODE	REMARKS		PER CAR	SED.	SP. 4 D.	SUB.	SP. CL. CP.	CV. CP.
23-108-32	COVER, Front Seat Back - Cont'd							
	Y1-M (code 515)	Rt.	1	---- ---	---- ---	---- ---	2148 872	
		Lt.	1	---- ---	---- ---	---- ---	2148 878	
	(code 516)	Rt.	1	---- ---	---- ---	---- ---	2148 873	
		Lt.	1	---- ---	---- ---	---- ---	2148 879	
	Y1-M (code 553)		1	---- ---	2149 186			
	(codes 555, 565)		1	---- ---	2149 187			
	(code 556)		1	---- ---	2149 188			
	(codes 557, 567)		1	---- ---	2149 189			
	Y1-H (code 521)		1	---- ---	2149 901			
	(code 522)		1	---- ---	2149 343			
	(code 523)		1	---- ---	2149 344			
	(code 524)		1	---- ---	2149 345			
	(code 534)		1	---- ---	2149 342			
	Y1-M (code 553)	Rt.	1	---- ---	---- ---	---- ---	2148 880	2148 880
		Lt.	1	---- ---	---- ---	---- ---	2148 884	2148 884
	(code 555)	Rt.	1	---- ---	---- ---	---- ---	2148 881	2148 881
		Lt.	1	---- ---	---- ---	---- ---	2148 885	2148 885
	(code 556)	Rt.	1	---- ---	---- ---	---- ---	2148 882	2148 882
		Lt.	1	---- ---	---- ---	---- ---	2148 886	2148 886
	(code 557)	Rt.	1	---- ---	---- ---	---- ---	2148 883	2148 883
		Lt.	1	---- ---	---- ---	---- ---	2148 887	2148 887
23-108-32	PANEL, Back of Front Seat Back							
	C3-H (code 331)		1	2177 507	2177 507			
	(code 333)		1	2177 508	2177 508			
	(code 334)		1	2177 509	2177 509			
	(code 335)		1	2177 510	2177 510			
	C1-L, C2-M, C3-H							
	(codes 313, 413)		1	---- ---	2177 493			
	(code 314)		1	---- ---	2177 496			
	(codes 404, 414, 424)		1	---- ---	2177 496	2177 496		
	(codes 315, 405, 415, 425, 465)		1	---- ---	2177 495	2177 495		
	(codes 403, 423)(panel)		1	---- ---	---- ---	2178 620		
	(codes 403, 423)(cover)		1	---- ---	---- ---	2178 620		
	C2-M (code 313)		1	---- ---	---- ---	---- ---	2177 503-4	
	(code 314)	Rt.	1	---- ---	---- ---	---- ---	2177 499	
		Lt.	1	---- ---	---- ---	---- ---	2177 500	
	(code 315)		1	---- ---	---- ---	---- ---	2177 501-2	
	(code 453)		2	---- ---	---- ---	---- ---	*2132 415	
	(code 454)		2	---- ---	---- ---	---- ---	*2132 416	
	(code 455)		2	---- ---	---- ---	---- ---	*2132 417	
	C1-L (panel) (code 401)		1	---- ---	---- ---	---- ---	---- ---	2177 497-8
	(code 404)	Rt.	1	---- ---	--- ---	--- ---	---- ---	2177 499
		Lt.	1	---- ---	---- ---	---- ---	---- ---	2177 500
	(code 405)		1	---- ---	---- ---	---- ---	---- ---	2177 501-2
	C3-H (cover)(codes 321, 331)		1	2177 507	2177 507			
	(codes 323, 333)		1	2177 508	2177 508			
	(codes 324, 334)		1	2177 509	2177 509			
	(codes 335)		1	2177 510	2177 510			
	C1-L, C2-M, C3-H, (cover)							
	(codes 313, 413)		1	---- ---	2177 493	---- ---	2177 503-4	
	(code 314)		1	---- ---	2177 496	---- ---	2177 498-9	
	(codes 404, 414, 424)		1	---- ---	2177 496	2177 496		
	(codes 315, 405, 415, 425, 465)		1	---- ---	2177 495	2177 495	2177 501-2	
	C2-M (cover) (code 453)		1	---- ---	*2132 418	---- ---	2132 418	2132 418
	(code 454)		1	---- ---	*2132 419	---- ---	2132 419	2132 419
	(code 455)		1	---- ---	*2132 420	---- ---	2132 420	2132 420

★ Indicates use as required.
⊟ Indicates parts not listed in any previous parts book.
Right and left part numbers are on same line, first number is right, second number is left.
* Indicates change or addition.

Printed in U.S.A.
Prices and specifications subject to change without notice.
March 8, 1963 Supersedes May 1, 1962.

MyMopar.com

CODE	REMARKS	PER CAR	SED.	SP. 4 D.	SUB.	SP. CL. CP.	CV. CP.
23-108-32	PANEL, Back of Front Seat Back - Cont'd						
	C2-M (code 463) (panel)	2	---- ---	---- ---	---- ---	2132 651	2132 651
	(cover)	2	---- ---	---- ---	---- ---	2132 652	2132 652
	C1-L (cover)(code 401)	1	---- ---	---- ---	---- ---	2177 497-8	2177 497-8
	(code 404) Rt.	1	---- ---	---- ---	---- ---	2177 499	2177 499
	Lt.	1	---- ---	---- ---	---- ---	2177 500	2177 500
	(code 405)	1	---- ---	---- ---	---- ---	2177 501-2	2177 679-80
	Y1-L (panel) (code 501)	1	---- ---	2148 678			
	(code 502)	1	---- ---	2148 679			
	(code 503)	1	---- ---	2148 680			
	(code 504)	1	---- ---	2148 681			
	Y1-L (panel) (code 501) Rt.	1	---- ---	---- ---	---- ---	2148 758	
	Lt.	1	---- ---	---- ---	---- ---	2148 762	
	(code 502) Rt.	1	---- ---	---- ---	---- ---	2148 759	
	Lt.	1	---- ---	---- ---	---- ---	2148 763	
	(code 503) Rt.	1	---- ---	---- ---	---- ---	2148 760	
	Lt.	1	---- ---	---- ---	---- ---	2148 764	
	(code 504) Rt.	1	---- ---	---- ---	---- ---	2148 761	
	Lt.	1	---- ---	---- ---	---- ---	2148 765	
	Y1-M (panel) (code 511)	1	---- ---	2149 160			
	(code 512)	1	---- ---	2149 161			
	(code 513)	1	---- ---	2149 162			
	(code 514)	1	---- ---	2149 163			
	(code 515)	1	---- ---	2149 164			
	(code 516)	1	---- ---	2149 165			
	Y1-M (panel) (code 511) Rt.	1	---- ---	---- ---	---- ---	2148 828	
	Lt.	1	---- ---	---- ---	---- ---	2148 834	
	(code 512) Rt.	1	---- ---	---- ---	---- ---	2148 829	
	Lt.	1	---- ---	---- ---	---- ---	2148 835	
	(code 513) Rt.	1	---- ---	---- ---	---- ---	2148 830	
	Lt.	1	---- ---	---- ---	---- ---	2148 836	
	(code 514) Rt.	1	---- ---	---- ---	---- ---	2148 831	
	Lt.	1	---- ---	---- ---	---- ---	2148 837	
	(code 515) Rt.	1	---- ---	---- ---	---- ---	2148 832	
	Lt.	1	---- ---	---- ---	---- ---	2148 838	
	(code 516) Rt.	1	---- ---	---- ---	---- ---	2148 833	
	Lt.	1	---- ---	---- ---	---- ---	2148 839	
	Y1-M (cover) (code 553)	1	---- ---	2149 166			
	(codes 555, 565)	1	---- ---	2149 167			
	(code 556)	1	---- ---	2149 168			
	(codes 557, 567)	1	---- ---	2149 169			
	Y1-M (panel) (code 553) Rt.	1	---- ---	---- ---	--- ---	2148 840	2148 840
	Lt.	1	---- ---	---- ---	---- ---	2148 844	2148 844
	(code 555) Rt.	1	---- ---	---- ---	--- ---	2148 841	2148 841
	Lt.	1	---- ---	---- ---	---- ---	2148 845	2148 845
	(code 556) Rt.	1	---- ---	---- ---	---- ---	2148 842	2148 842
	Lt.	1	---- ---	---- ---	---- ---	2148 846	2148 846
	(code 557) Rt.	1	---- ---	---- ---	---- ---	2148 843	2148 843
	Lt.	1	---- ---	---- ---	---- ---	2148 847	2148 847
	Y1-H (panel) (code 521)	1	---- ---	2149 333			
	(code 522)	1	---- ---	2149 334			
	(code 523)	1	---- ---	2149 335			
	(codes 524, 534)	1	---- ---	2149 336			
23-108-66	COVER, Seat Cushion Frame Center Stanchion (paint as required)						
	C2-M (black)	1	---- ---	2172 848-9	---- ---	2172 848-9	2172 848-9

★ Indicates use as required.
⊟ Indicates parts not listed in any previous parts book.
March 8, 1963 Supersedes May 1, 1962.

Printed in U.S.A.
Prices and specifications subject to change without notice.
Right and left part numbers are on same line, first number is right, second number is left.
* Indicates change or addition.

MyMopar.com

CODE	REMARKS	PER CAR	SED.	SP. 4 D.	SUB.	SP. CL. CP.	CV. CP.
23-108-84	COVER, Front Seat Back Outer Hinge Arm (paint as required)						
	C1-L Rt.	1	---- ---	---- ---	---- ---	1976 132	
	Lt.	1	---- ---	---- ---	---- ---	1976 133	
	(cushion frame to back hinge post) (black)	4	---- ---	---- ---	---- ---	2172 835	2172 835
23-108-98	SHIELD or MOULDING, Front Seat Side						
	C1, C2, C3, (Y1 except upper) (upper or back)(anodized)	1	2080 868-9	2080 868-9	2080 868-9	2080 868-9	2080 868-9
	(back frame)	1	2161 236-7	2161 236-7	2161 236-7	2161 236-7	2161 236-7
	(seat cushion)(manual and power)(anodized) Rt.	1	2080 732	2080 732	2080 732	2080 732	2080 732
	(seat cushion)(power adj.)(anodized) Lt.	1	2080 733	2080 733	2080 733	2080 733	2080 733
	(seat cushion)(manual adj.)(anodized) Lt.	1	2080 737	2080 737	2080 737	2080 737	2080 737
	(seat cushion)(chrome)	1	---- ---	---- ---	---- ---	2162 478-9	2162 478-9
	C2-M (seat cushion side shield) (codes 453, 454, 455) (up to serial No. 8223-103285)	1	---- ---	---- ---	---- ---	2162 478-9	2162 478-9
	(after serial No. 8223-103285)	1	---- ---	---- ---	*2292 492-3	2292 492-3	2292 492-3
	Y1 (upper)	1	---- ---	2080 884-5	---- ---	2080 886-7	2080 886-7
	Y1-M (lower)(primed)	1	---- ---	---- ---	---- ---	2080 516-7	2080 516-7
23-108-99	COVER, Front Seat Side Shield Protector						
	Y1-M (black)	1	---- ---	---- ---	---- ---	2176 472-3	2176 472-3
23-108-142	BRACKET, Front Seat Side Shield Support						
	C2	2	---- ---	---- ---	---- ---	2292 475	2292 475
23-108-144	CLIP, Front Seat Side Shield Spacer						
	C1, C2, C3, Y1	2	6008 217	6008 217	---- ---	6008 217	6008 217
23-109-3	BACK, Rear Seat						
	C1-L (code 301)	1	2131 501	2131 501	---- ---	2131 578	
	(code 302)	1	2132 875	2132 875	---- ---	2132 914	
	(code 308)	1	2132 876	2132 876	---- ---	2132 915	
	(code 303)	1	2131 502	2131 502	---- ---	2131 579	
	(code 304)	1	2131 503	2131 503	---- ---	2131 580	
	(code 305)	1	2131 504	2131 504	---- ---	2131 581	
	C1-L (code 341)	1	*2144 296	*2144 296	---- ---	*2144 340	
	(code 343)	1	*2144 297	*2144 297	---- ---	*2144 341	
	(code 344)	1	*2144 298	*2144 298	---- ---	*2144 342	
	(code 345)	1	*2144 299	*2144 299	---- ---	*2144 343	
	C1-L (police)						
	(code 301)	1	2132 792				
	(code 303)	1	2132 793				
	(code 304)	1	2132 794				
	(code 305)	1	2132 795				
	(code 444)	1	2132 773				
	C3-H (code 331)	1	2132 286	2132 286			
	(code 333)	1	2132 287	2132 287			
	(code 334)	1	2132 288	2132 288			
	(code 335)	1	2132 289	2132 289			
	C2-M, C3-H, (code 313)	1	---- ---	2131 739	---- ---	2131 816	
	(code 314)	1	---- ---	2131 740	---- ---	2131 817	
	(code 315)	1	---- ---	2131 741	---- ---	2131 818	

★ Indicates use as required.
⊟ Indicates parts not listed in any previous parts book.
Right and left part numbers are on same line, first number is right, second number is left.
* Indicates change or addition.

Printed in U.S.A.
Prices and specifications subject to change without notice.
March 8, 1963 Supersedes May 1, 1962.

MyMopar.com

CODE	REMARKS	PER CAR	SED.	SP. 4D.	SUB.	SP. CL. CP.	CV. CP.
23-109-3	BACK, Rear Seat - Cont'd						
	C2-M, C2-H (code 413)	1	---- ---	2131 883			
	(code 414)	1	---- ---	2131 884			
	(code 415)	1	---- ---	2131 885			
	(code 464)	1	---- ---	2132 751			
	(code 465)	1	---- ---	2132 126			
	C1-L, C3-H, (Sub. 2nd seat)						
	(codes 403, 423)	1	---- ---	---- ---	2132 592		
	(codes 404, 424)	1	---- ---	---- ---	2131 956		
	(codes 405, 425)	1	---- ---	---- ---	2131 956		
	C1-L, C3-H, (Sub. 3rd seat)						
	(codes 403, 423)	1	---- ---	---- ---	2132 596		
	(codes 404, 424)	1	---- ---	---- ---	2131 968		
	(codes 405, 425)	1	---- ---	---- ---	2131 969		
	C2-M (code 453)	1	---- ---	2132 943			
	(code 454)	1	---- ---	2132 944			
	(code 455)	1	---- ---	2132 945			
	C2-M (code 453)	1	---- ---	---- ---	---- ---	2132 155	2132 442
	(code 454)	1	---- ---	---- ---	---- ---	2132 156	2132 443
	(code 455)	1	---- ---	---- ---	---- ---	2132 157	2132 444
	(code 463)	1	---- ---	---- ---	---- ---	2132 666-7	
		2	---- ---	---- ---	---- ---	---- ---	2132 803
	C1-L (code 401)	1	---- ---	---- ---	---- ---	2132 736	2131 934
	(code 404)	1	---- ---	*2131 884	---- ---	2132 737	2131 935
	(code 405)	1	---- ---	*2131 885	---- ---	2132 738	2131 936
	Y1-L (spring and cover)						
	(code 501)	1	---- ---	2148 639	---- ---	2148 734	
	(code 502)	1	---- ---	2148 640	---- ---	2148 735	
	(code 503)	1	---- ---	2148 641	---- ---	2148 736	
	(code 504)	1	---- ---	2148 642	---- ---	2148 737	
	Y1-M (code 511)	1	---- ---	2149 250			
	(code 512)	1	---- ---	2149 251			
	(code 513)	1	---- ---	2149 252			
	(code 514)	1	---- ---	2149 253			
	(code 515)	1	---- ---	2149 254			
	(code 516)	1	---- ---	2149 255			
	(code 553)	1	---- ---	2149 256	---- ---	---- ---	2149 100
	(code 555)	1	---- ---	2149 257	---- ---	---- ---	2149 101
	(code 556)	1	---- ---	2149 258	---- ---	---- ---	2149 102
	(code 557)	1	---- ---	2149 259	---- ---	---- ---	2149 103
	(code 565)	1	---- ---	2149 936			
	(code 567)	1	---- ---	2149 937			
	Y1-H (code 521)	1	---- ---	2149 906			
	(code 522)	1	---- ---	2149 293			
	(code 523)	1	---- ---	2149 294			
	(code 524)	1	---- ---	2149 295			
	(code 534)	1	---- ---	2149 292			
	Y1-M (code 511)	1	---- ---	---- ---	---- ---	2149 036	
	(code 512)	1	---- ---	---- ---	---- ---	2149 037	
	(code 513)	1	---- ---	---- ---	---- ---	2149 038	
	(code 514)	1	---- ---	---- ---	---- ---	2149 039	
	(code 515)	1	---- ---	---- ---	---- ---	2149 040	
	(code 516)	1	---- ---	---- ---	---- ---	2149 041	
	(code 553)	1	---- ---	---- ---	---- ---	2149 042	

★ Indicates use as required.
⊟ Indicates parts not listed in any previous parts book.
March 8, 1963 Supersedes May 1, 1962.

Printed in U.S.A.
Prices and specifications subject to change without notice.
Right and left part numbers are on same line, first number is right, second number is left.
* Indicates change or addition.

MyMopar.com

CODE	REMARKS	PER CAR	SED.	SP. 4 D.	SUB.	SP. CL. CP.	CV. CP.
23-109-3	BACK, Rear Seat - Cont'd						
	Y1-M (code 555)	1	---- ---	---- ---	---- ---	*2149 043	
	(code 556)	1	---- ---	---- ---	---- ---	2149 044	
	(code 557)	1	---- ---	---- ---	---- ---	2149 045	
23-109-4	COVER, Rear Seat Back						
	C1-L (code 301)	1	2131 505	2131 505	---- ---	2131 582	
	(code 302)	1	2132 877	2132 877	---- ---	2132 916	
	(code 308)	1	2132 878	2132 878	---- ---	2132 917	
	(code 303)	1	2131 506	2131 506	---- ---	2131 583	
	(code 304)	1	2131 507	2131 507	---- ---	2131 584	
	(code 305)	1	2131 508	2131 508	---- ---	2131 585	
	C1-L (code 341)	1	*2144 300	*2144 300	---- ---	*2144 344	
	(code 343)	1	*2144 301	*2144 301	---- ---	*2144 345	
	(code 344)	1	*2144 302	*2144 302	---- ---	*2144 346	
	(code 345)	1	*2144 303	*2144 303	---- ---	*2144 347	
	C3-H (code 331)	1	2132 290	2132 290			
	(code 333)	1	2132 291	2132 291			
	(code 334)	1	2132 292	2132 292			
	(code 335)	1	2132 293	2132 293			
	(code 465)	1	---- ---	2132 127			
	C2-M (code 313)	1	---- ---	2131 742	---- ---	2131 819	
	(code 314)	1	---- ---	2131 743	---- ---	2131 820	
	(code 315)	1	---- ---	2131 744	---- ---	2131 821	
	C2-M (code 413)	1	---- ---	2131 886			
	(code 414)	1	---- ---	2131 887			
	(code 415)	1	---- ---	2131 888			
	C1-L (code 444)	1	2132 774				
	C1-L, C3-H, (Sub. 2nd seat)						
	(codes 403, 423)	1	---- ---	---- ---	2132 593		
	(codes 404, 424)	1	---- ---	---- ---	2131 959		
	(codes 405, 425)	1	---- ---	---- ---	2131 960		
	C1-L, C3-H, (Sub. 3rd seat)						
	(codes 403, 423)	1	---- ---	---- ---	2132 597		
	(codes 404, 424)	1	---- ---	---- ---	2131 971		
	(codes 405, 425)	1	---- ---	---- ---	2131 972		
	C2-M (code 453)	1	---- ---	2132 946	---- ---	2132 158	2132 445
	(code 454)	1	---- ---	2132 947	---- ---	2132 159	2132 446
	(code 455)	1	---- ---	2132 948	---- ---	2132 160	2132 447
	(code 463)	2	---- ---	---- ---	---- ---	2132 668	2132 804
	(code 464)	1	---- ---	2132 752			
	C1-L (code 401)	1	---- ---	---- ---	---- ---	2132 738	2131 937
	(code 404)	1	---- ---	*2131 887	---- ---	2132 739	2131 938
	(code 405)	1	---- ---	*2131 888	---- ---	2132 740	2131 939
	Y1-L (code 501)	1	---- ---	2148 635	---- ---	2148 730	
	(code 502)	1	---- ---	2148 636	---- ---	2148 731	
	(code 503)	1	---- ---	2148 637	---- ---	2148 732	
	(code 504)	1	---- ---	2148 638	---- ---	2148 733	
	Y1-M (code 511)	1	---- ---	2149 240	---- ---	2149 026	
	(code 512)	1	---- ---	2149 241	---- ---	2149 027	
	(code 513)	1	---- ---	2149 242	---- ---	2149 028	
	(code 514)	1	---- ---	2149 243	---- ---	2149 029	
	(code 515)	1	---- ---	2149 244	---- ---	2149 030	
	(code 516)	1	---- ---	2149 245	---- ---	2149 031	
	Y1-H (code 521)	1	---- ---	2149 909			
	(code 522)	1	---- ---	2149 288			
	(code 523)	1	---- ---	2149 289			
	(code 524)	1	---- ---	2149 290			
	(code 534)	1	---- ---	2149 287			

★ Indicates use as required.
⊟ Indicates parts not listed in any previous parts book.
Right and left part numbers are on same line, first number is right, second number is left.
* Indicates change or addition.

Printed in U.S.A.
Prices and specifications subject to change without notice.
March 8, 1963 Supersedes May 1, 1962.

MyMopar.com

CODE	REMARKS	PER CAR	SED.	SP. 4 D.	SUB.	SP. CL. CP.	CV. CP.
23-109-4	COVER, Rear Seat Back - Cont'd						
	Y1-M (code 553)	1	---- ---	2149 246	---- ---	2149 032	2149 096
	(code 555)	1	---- ---	2149 247	---- ---	2149 033	2149 097
	(code 556)	1	---- ---	2149 248	---- ---	2149 034	2149 098
	(code 557)	1	---- ---	2149 249	---- ---	2149 035	2149 099
	(code 565)	1	---- ---	2149 938			
	(code 567)	1	---- ---	2149 939			
23-109-5	PANEL, Back of Rear Seat Back						
	C1-L, C3-H,(Sub. 2nd seat)						
	(codes 403, 404, 405)(gray)	1	---- ---	---- ---	2169 947		
	(codes 404, 405)(floor pan cover)	1	---- ---	---- ---	2132 478		
	(codes 403, 423)(floor pan cover)	1	---- ---	---- ---	2132 584		
	(code 423)(insert) (cordovan)	1	---- ---	---- ---	2178 635		
	(codes 424, 425)(black)	1	---- ---	---- ---	2176 435		
	(to rear floor pan)	1	---- ---	---- ---	2176 432		
	(floor pan cover)	1	---- ---	---- ---	2132 478		
	(code 423)(insert)(to rear floor pan)	1	---- ---	---- ---	2178 638		
	C1-L, C3-H,(Sub. 3rd seat)						
	(codes 403, 404, 405)(insert) (gray)	1	---- ---	---- ---	2169 949		
	(codes 424, 425)(insert) (black)	1	---- ---	---- ---	2176 433		
	(code 423)(panel)(cordovan)	1	---- ---	---- ---	2178 637		
	Y1-M (code 553)	1	---- ---	---- ---	--- ---	---- ---	2149 104
	(code 555)	1	---- ---	---- ---	---- ---	---- ---	2149 105
	(code 556)	1	---- ---	---- ---	---- ---	---- ---	2149 106
	(code 557)	1	---- ---	---- ---	---- ---	---- ---	2149 107
23-109-35	CUSHION, Rear Seat						
	C1-L (code 301)	1	2131 509	2131 509	---- ---	2131 586	
	(code 302)	1	2132 879	2132 879	---- ---	2132 918	
	(w/airfoam)	1	2132 887	2132 887	---- ---	2132 926	
	(code 308)	1	2132 880	2132 880	---- ---	2132 919	
	(w/airfoam)	1	2132 888	2132 888	---- ---	2132 927	
	(code 303)	1	2131 510	2131 510	---- ---	2131 587	
	(code 304)	1	2131 511	2131 511	---- ---	2131 588	
	(code 305)	1	2131 512	2131 512	---- ---	2131 589	
	C1-L (w/airfoam pad)						
	(code 301)	1	2131 541	2131 541	---- ---	2131 618	
	(code 303)	1	2131 542	2131 542	---- ---	2131 619	
	(code 304)	1	2131 543	2131 543	---- ---	2131 620	
	(code 305)	1	2131 544	2131 544	---- ---	2131 621	
	C1-L (code 341)	1	*2144 304	*2144 304	---- ---	*2144 348	
	(code 343)	1	*2144 305	*2144 305	---- ---	*2144 349	
	(code 344)	1	*2144 306	*2144 306	---- ---	*2144 350	
	(code 345)	1	*2144 307	*2144 307	---- ---	*2144 351	
	C1-L (w/airfoam pad)						
	(code 341)	1	*2144 372	*2144 372	---- ---	*2144 400	
	(code 343)	1	*2144 373	*2144 373	---- ---	*2144 401	
	(code 344)	1	*2144 374	*2144 374	---- ---	*2144 402	
	(code 345)	1	*2144 375	*2144 375	---- ---	*2144 403	
	C1-L (police)						
	(code 301)	1	2132 796				
	(code 303)	1	2132 797				
	(code 304)	1	2132 798				
	(code 305)	1	2132 799				
	(code 444)	1	2132 775				

★ Indicates use as required.
⊟ Indicates parts not listed in any previous parts book.
March 8, 1963 Supersedes May 1, 1962.

Printed in U.S.A.
Prices and specifications subject to change without notice.
Right and left part numbers are on same line, first number is right, second number is left.
* Indicates change or addition.

MyMopar.com

CODE	REMARKS	PER CAR	SED.	SP. 4 D.	SUB.	SP. CL. CP.	CV. CP.
23-109-35	CUSHION, Rear Seat - Cont'd						
	C1-L (police) (w/airfoam pad)						
	(code 301)	1	2132 805				
	(code 303)	1	2132 806				
	(code 304)	1	2132 807				
	(code 305)	1	2132 808				
	(code 444)	1	2132 787				
	C3-H (code 331)	1	2132 311	2132 311			
	(code 333)	1	2132 312	2132 312			
	(code 334)	1	2132 313	2132 313			
	(code 335)	1	2132 314	2132 314			
	C2-M (code 313)	1	---- ---	2131 745	---- ---	2131 822	
	(code 314)	1	---- ---	2131 746	---- ---	2131 823	
	(code 315)	1	---- ---	2131 747	---- ---	2131 824	
	(code 413)	1	---- ---	2131 889			
	(code 414)	1	---- ---	2131 890			
	(codes 415, 465)	1	---- ---	2131 891			
	C1-L, C3-H, (Sub. 2nd seat)						
	(codes 403, 423)	1	---- ---	---- ---	2132 594		
	(codes 404, 424)	1	---- ---	---- ---	2131 962		
	(codes 405, 425)	1	---- ---	---- ---	2131 963		
	C1-L, C3-H (Sub. 3rd. seat)						
	(codes 403, 423)	1	---- ---	---- ---	*2132 598		
	(codes 404, 424)	1	---- ---	---- ---	2131 974		
	(codes 405, 425)	1	---- ---	---- ---	2131 975		
	C2-M (code 453)	1	---- ---	2132 949	---- ---	2132 161	2132 448
	(code 454)	1	---- ---	2132 950	---- ---	2132 162	2132 449
	(code 455)	1	---- ---	2132 951	---- ---	2132 163	2132 450
	(code 463)	1	---- ---	---- ---	---- ---	2132 670-1	2132 670-1
	C1-L (code 401)	1	---- ---	---- ---	---- ---	---- ---	2131 940
	(code 404)	1	---- ---	*2131 890	---- ---	2132 741	2131 941
	(code 405)	1	---- ---	*2131 891	---- ---	2132 742	2131 942
	Y1-L (code 501)	1	---- ---	2148 631	---- ---	2148 710	
	(code 502)	1	---- ---	2148 632	---- ---	2148 711	
	(code 503)	1	---- ---	2148 633	---- ---	2148 712	
	(code 504)	1	---- ---	2148 634	---- ---	2148 713	
	Y1-M (code 511)	1	---- ---	2149 230	---- ---	2148 984	
	(code 512)	1	---- ---	2149 231	---- ---	2148 985	
	(code 513)	1	---- ---	2149 232	---- ---	2148 986	
	(code 514)	1	---- ---	2149 233	---- ---	2148 987	
	(code 515)	1	---- ---	2149 234	---- ---	2148 988	
	(code 516)	1	---- ---	2149 235	---- ---	2148 989	
	Y1-H (code 521)	1	---- ---	2149 908			
	(code 522)	1	---- ---	2149 308			
	(code 523)	1	---- ---	2149 309			
	(code 524)	1	---- ---	2149 310			
	(code 534)	1	---- ---	2149 307			
	Y1-M (code 553)	1	---- ---	2149 236	---- ---	2148 994	2149 092
	(codes 555, 565)	1	---- ---	2149 237	---- ---	2148 995	2149 093
	(code 556)	1	---- ---	2149 238	---- ---	2148 996	2149 094
	(codes 557, 567)	1	---- ---	2149 239	---- ---	2148 997	2149 095
23-109-36	COVER, Rear Seat Cushion						
	C1-L (code 301)	1	2131 513	2131 513	---- ---	2131 590	
	(code 302)	1	2132 881	2132 881	---- ---	2132 920	
	(code 303)	1	2131 514	2131 514	---- ---	2131 591	
	(code 304)	1	2131 515	2131 515	---- ---	2131 592	
	(code 305)	1	2131 516	2131 516	---- ---	2131 593	
	(code 308)	1	2132 882	2132 882	---- ---	2132 921	

★ Indicates use as required.
B Indicates parts not listed in any previous parts book.
Right and left part numbers are on same line, first number is right, second number is left.
* Indicates change or addition.

Printed in U.S.A.
Prices and specifications subject to change without notice.
March 8, 1963 Supersedes May 1, 1962.

MyMopar.com

CODE	REMARKS	PER CAR	SED.	SP. 4 D.	SUB.	SP. CL. CP.	CV. CP.
23-109-36	COVER, Rear Seat Cushion - Cont'd						
	C1-L (code 341)	1	*2144 308	*2144 308	---- ---	*2144 352	
	(code 343)	1	*2144 309	*2144 309	---- ---	*2144 353	
	(code 344)	1	*2144 310	*2144 310	---- ---	*2144 354	
	(code 345)	1	*2144 311	*2144 311	---- ---	*2144 355	
	C3-H (code 331)	1	2132 315	2132 315			
	(code 333)	1	2132 316	2132 316			
	(code 334)	1	2132 317	2132 317			
	(code 335)	1	2132 318	2132 318			
	C2-M, C3-H, (code 313)	1	---- ---	2131 748	---- ---	2131 825	
	(code 314)	1	---- ---	2131 749	---- ---	2131 826	
	(code 315)	1	---- ---	2131 750	---- ---	2131 827	
	(code 413)	1	---- ---	2131 892			
	(code 414)	1	---- ---	2131 893			
	(codes 415, 465)	1	---- ---	2131 894			
	C1-L, C3-H, (Sub. 2nd seat)						
	(codes 403, 423)	1	---- ---	---- ---	2132 595		
	(codes 404, 424)	1	---- ---	---- ---	2131 965		
	(codes 405, 425)	1	---- ---	---- ---	2131 966		
	C1-L, C3-H, (Sub. 3rd seat)						
	(codes 403, 423)	1	---- ---	---- ---	2132 599		
	(codes 404, 424)	1	---- ---	---- ---	2131 977		
	(codes 405, 425)	1	---- ---	---- ---	2131 978		
	C2-M (code 453)	1	---- ---	2132 952	---- ---	2132 164	2132 451
	(code 454)	1	---- ---	2132 953	---- ---	2132 165	2132 452
	(code 455)	1	---- ---	2132 954	---- ---	2132 166	2132 453
	(code 463)	1	---- ---	---- ---	---- ---	2132 672-3	2132 672-3
	C1-L (code 401)	1	---- ---	---- ---	---- ---	2132 742	2131 943
	(code 404)	1	---- ---	*2131 893	---- ---	2132 743	2131 944
	(code 405)	1	---- ---	*2131 894	---- ---	2132 744	2131 945
	(code 444) (Police)	1	2132 776				
	Y1-L (code 501)	1	---- ---	2148 627	---- ---	2148 706	
	(code 502)	1	---- ---	2148 628	---- ---	2148 707	
	(code 503)	1	---- ---	2148 629	---- ---	2148 708	
	(code 504)	1	---- ---	2148 630	---- ---	2148 709	
	Y1-M (code 511)	1	---- ---	2149 220	---- ---	2148 978	
	(code 512)	1	---- ---	2149 221	---- ---	2148 979	
	(code 513)	1	---- ---	2149 222	---- ---	2148 980	
	(code 514)	1	---- ---	2149 223	---- ---	2148 981	
	(code 515)	1	---- ---	2149 224	---- ---	2148 982	
	(code 516)	1	---- ---	2149 225	---- ---	2148 983	
	Y1-H (code 521)	1	---- ---	2149 911			
	(code 522)	1	---- ---	2149 303			
	(code 523)	1	---- ---	2149 304			
	(code 524)	1	---- ---	2149 305			
	(code 534)	1	---- ---	2149 302			
	Y1-M (code 553)	1	---- ---	2149 226	---- ---	2148 990	2149 088
	(codes 555, 565)	1	---- ---	2149 227	---- ---	2148 991	2149 089
	(code 556)	1	---- ---	2149 228	---- ---	2148 992	2149 090
	(codes 557, 567)	1	---- ---	2149 229	---- ---	2148 993	2149 091
23-109-38	RETAINER, Center Floor Pan Rear Seat Cushion						
	C1, C2, C3, Y1	2	1810 037	1810 037	---- ---	1810 037	1810 037
23-109-40	INSERT, Rear Seat Cushion Bottom Panel						
	C1-L (codes 403, 404, 405) (gray)	1	---- ---	---- ---	2169 948		
	(codes 424, 425) (black)	1	---- ---	---- ---	2176 434		
	(code 423) (cordovan)	1	---- ---	---- ---	2178 636		

★ Indicates use as required.
⊟ Indicates parts not listed in any previous parts book.
March 8, 1963 Supersedes May 1, 1962.

Printed in U.S.A.
Prices and specifications subject to change without notice.
Right and left part numbers are on same line, first number is right, second number is left.
* Indicates change or addition.

MyMopar.com

CODE	REMARKS	PER CAR	SED.	SP. 4 D.	SUB.	SP. CL. CP.	CV. CP.
23-111-10	STRIP, Front Pillar Upper Tacking						
	Y1	2	---- ---	1878 174	---- ---	1878 174	1878 174
23-111-30	STRIP, Folding Top Header Front Tacking						
	Y1	1	---- ---	---- ---	---- ---	---- ---	1750 628
	(side)	2	---- ---	---- ---	---- ---	---- ---	1691 923
23-111-31	RETAINER, Folding Top Header Outer Panel Tacking Strip						
	C1, C2, C3	1	---- ---	---- ---	---- ---	---- ---	1952 194
23-111-37	STRIP, Folding Top Bow Tacking						
	C1, C2, C3 (No. 1 Bow)	2	---- ---	---- ---	---- ---	---- ---	1950 509
	(No. 2 Bow)	2	---- ---	---- ---	---- ---	---- ---	1950 509
	(Rear Bow)	1	---- ---	---- ---	---- ---	---- ---	1950 510
	Y1 (Front Bow)	2	---- ---	---- ---	---- ---	---- ---	1691 901
	(Center Bow)	2	---- ---	---- ---	---- ---	---- ---	1691 901
23-112-12	BOOT, Folding Top Dust						
	C1-L, C2-M (with rear seat back channel insert, 5/8" wide)						
	(code 401) (blue)	1	---- ---	---- ---	---- ---	---- ---	*2177 925
	(codes 404, 454) (black)	1	---- ---	---- ---	---- ---	---- ---	*2177 926
	(codes 405, 455) (red)	1	---- ---	---- ---	---- ---	---- ---	*2177 927
	(codes 453, 463) (tan)	1	---- ---	---- ---	---- ---	---- ---	*2178 844
	(with seaming welt filler, 1/4" dia.)						
	(code 401) (blue)	1	---- ---	---- ---	---- ---	---- ---	*2178 446
	(codes 404, 454) (black)	1	---- ---	---- ---	---- ---	---- ---	*2178 447
	(codes 405, 455) (red)	1	---- ---	---- ---	---- ---	---- ---	*2178 448
	(codes 453, 463) (tan)	1	---- ---	---- ---	---- ---	---- ---	*2178 449
	Y1-M (code 553)(w/o pleats in center cover)	1	---- ---	---- ---	---- ---	---- ---	2177 545
	(code 555)	1	---- ---	---- ---	---- ---	---- ---	2177 546
	(code 556)	1	---- ---	---- ---	---- ---	---- ---	2175 154
	(code 557)	1	---- ---	---- ---	---- ---	---- ---	2177 547
	Y1-M (w/pleats in center cover)						
	(code 553)	1	---- ---	---- ---	---- ---	---- ---	2178 884
	(code 555)	1	---- ---	---- ---	---- ---	---- ---	2178 885
	(code 556)	1	---- ---	---- ---	---- ---	---- ---	2178 886
	(code 557)	1	---- ---	---- ---	---- ---	---- ---	2178 887
23-112-18	RETAINER, Channel Rear Seat Back Dust Boot						
	C1, C2 (for large insert)	1	---- ---	---- ---	---- ---	---- ---	*2160 567
	Y1 (for large insert)	1	---- ---	---- ---	---- ---	---- ---	*1969 619
	(attaching screw)	8	---- ---	---- ---	---- ---	---- ---	*9415 552
	C1, C2 (for small insert)	1	---- ---	---- ---	---- ---	---- ---	*2410 007
	Y1 (for small insert)	1	---- ---	---- ---	---- ---	---- ---	*2410 009
23-112-19	INSERT, Rear Seat Dust Boot Cover						
	Y1-M	1	---- ---	---- ---	---- ---	---- ---	2160 328
23-112-21	FASTENER and PLATE, Folding Dust Boot						
	C1, C2	23	---- ---	---- ---	---- ---	---- ---	*2193 035
23-112-33	EXTENSION, Folding Top Pocket Panel						
	C2-M	1	---- ---	---- ---	---- ---	---- ---	2178 420-1

★ Indicates use as required.
⊟ Indicates parts not listed in any previous parts book.
Right and left part numbers are on same line, first number is right, second number is left.
* Indicates change or addition.

Printed in U.S.A.
Prices and specifications subject to change without notice.
March 8, 1963 Supersedes May 1, 1962.

MyMopar.com

CODE	REMARKS	PER CAR	SED.	SP. 4 D.	SUB.	SP. CL. CP.	CV. CP.
23-112-45	CURTAIN, Folding Top Back						
	C1-L, C2-M, (codes 401, 404, 405, 453, 455, 456) (black	1	---- ---	---- ---	---- ---	---- ---	2178 802
	(white)	1	---- ---	---- ---	---- ---	---- ---	2178 803
	Y1-M (codes 553, 555, 556, 557)						
	(black)	1	---- ---	---- ---	---- ---	---- ---	2172 104
	(white)	1	---- ---	---- ---	---- ---	---- ---	2177 530
23-112-46	ZIPPER, Folding Top Rear Curtain						
	C1-L, C2-M (codes 401, 404, 405, 453, 454, 455, 456, 463)						
	(black)	1	---- ---	---- ---	---- ---	---- ---	1965 887
	Y1-M (codes 553, 555, 556, 557)						
	(black)	1	---- ---	---- ---	---- ---	---- ---	2172 107
23-112-70	RETAINER, Folding Top to Belt Bar Side						
	C1, C2 (galvanized)	1	---- ---	---- ---	---- ---	---- ---	2165 706-7
	(finished)	1	---- ---	---- ---	---- ---	---- ---	2165 706-7
	(center)(galvanized)	1	---- ---	---- ---	---- ---	---- ---	1963 550
	(inner)	2	---- ---	---- ---	---- ---	---- ---	2216 421
	Y1	2	---- ---	---- ---	---- ---	---- ---	1877 746-7
	(at belt)	2	---- ---	---- ---	---- ---	---- ---	2094 354
23-112-75	TIP, Folding Top Wire-on Binding End						
	C1-L, C2-M, Y1-M	1	---- ---	---- ---	---- ---	---- ---	1158 976-7
23-112-88	PACKAGE, Folding Top Rear Bow Tension Cable						
	C1, C2	2	---- ---	---- ---	---- ---	---- ---	2166 659
	Y1 (to wheelhouse bracket)	1	---- ---	---- ---	---- ---	---- ---	1810 118
	(to bar bolt)	1	---- ---	---- ---	---- ---	---- ---	2166 660
23-112-108	DECK and SIDE QUARTER, Folding Top						
	C1-L, C2-M (codes 401, 404, 405, 453, 454, 455, 463)(black)	1	---- ---	---- ---	---- ---	---- ---	2178 404
	(white)	1	---- ---	---- ---	---- ---	---- ---	2178 405
	Y1-M (codes 553, 555, 556, 557)						
	(black)	1	---- ---	---- ---	---- ---	---- ---	2171 895
	(white)	1	---- ---	---- ---	---- ---	---- ---	2177 534
23-112-112	PAD, Folding Top Side Quarter Stay						
	C1-L, C2-M (codes 401, 404, 405, 453, 454, 455, 463) (black)	1	---- ---	---- ---	---- ---	---- ---	2178 796-7
	Y1-M (codes 553, 555, 556, 557)						
	(black)	1	---- ---	---- ---	---- ---	---- ---	2172 100-1
23-112-153	PANEL, Rear Quarter Pocket						
	C1-L, C2-M (code 401)	1	---- ---	---- ---	---- ---	---- ---	2132 086-7
	(codes 453, 463)	1	---- ---	---- ---	---- ---	---- ---	2132 537-8
	(codes 404, 454)	1	---- ---	---- ---	---- ---	---- ---	2132 088-9
	(codes 405, 455)	1	---- ---	---- ---	---- ---	---- ---	2132 090-1
	(pocket panel cover)						
	(code 401)	1	---- ---	---- ---	---- ---	---- ---	2132 092-3
	(code 453)	1	---- ---	---- ---	---- ---	---- ---	2132 402-3
	(codes 404, 454)	1	---- ---	---- ---	---- ---	---- ---	2132 094-5
	(codes 405, 455)	1	---- ---	---- ---	---- ---	---- ---	2132 096-7

★ Indicates use as required.
⊟ Indicates parts not listed in any previous parts book.
March 8, 1963 Supersedes May 1, 1962.

Printed in U.S.A.
Prices and specifications subject to change without notice.
Right and left part numbers are on same line, first number is right, second number is left.
* Indicates change or addition.

MyMopar.com

CODE	REMARKS	PER CAR	SED.	SP. 4 D.	SUB.	SP. CL. CP.	CV. CP.
23-112-153	PANEL, Rear Quarter Pocket - Cont'd						
	C1-L, C2-M (folding top well)						
	(code 401)	1	---- ---	---- ---	---- ---	---- ---	2178 792
	(codes 453, 463)	1	---- ---	---- ---	---- ---	---- ---	*2178 411
	(codes 404, 454)	1	---- ---	---- ---	---- ---	---- ---	2178 794
	(codes 405, 455)	1	---- ---	---- ---	---- ---	---- ---	2178 795
	(rear quarter pocket shelf panel)(code 401)	1	---- ---	--- ---	--- ---	---- ---	2132 080-1
	(codes 453, 463)	1	---- ---	---- ---	---- ---	---- ---	2132 498-9
	(codes 404, 454)	1	---- ---	---- ---	---- ---	---- ---	2132 082-3
	(codes 405, 455)	1	---- ---	---- ---	---- ---	---- ---	2132 084-5
	Y1-M (pocket panel)(code 553)	1	---- ---	---- ---	---- ---	---- ---	2149 080-1
	(code 555)	1	---- ---	---- ---	---- ---	---- ---	2149 082-3
	(code 556)	1	---- ---	---- ---	---- ---	---- ---	2149 084-5
	(code 557)	1	---- ---	---- ---	---- ---	---- ---	2149 086-7
	(pocket panel cover)						
	(code 553)	1	---- ---	---- ---	---- ---	---- ---	2149 072-3
	(code 555)	1	---- ---	---- ---	---- ---	---- ---	2149 074-5
	(code 556)	1	---- ---	---- ---	---- ---	---- ---	2149 076-7
	(code 557)	1	---- ---	---- ---	---- ---	---- ---	2149 078-9
	Y1-M (folding top well)						
	(code 553)	1	---- ---	---- ---	---- ---	---- ---	2177 543
	(code 555)	1	---- ---	---- ---	---- ---	---- ---	2177 544
	(codes 556, 557)	1	---- ---	---- ---	---- ---	---- ---	2176 441
23-113-2	WEATHERCORD, Door (order by color)						
	C1, C2, C3 (blue)	★	2178 601	2178 601	2178 601	2178 601	2178 601
	(cocoa)	★	2178 602	2178 602	2178 602	2178 602	2178 602
	(gray)	★	2178 603	2178 603	2178 603	2178 603	2178 603
	(red)	★	2178 604	2178 604	2178 604	2178 604	2178 604
	(tan)	★	*2178 831	*2178 831	*2178 831	*2178 831	*2178 831
	(codes 302, 308) (black)	★	*2163 695	*2163 695	---- ---	*2163 695	
23-113-25	WEATHERCORD, Front Door Hinge Pillar						
	C2-M (codes 313, 413, 453, 463) (tan)	★	---- ---	*2178 831	---- ---	*2178 831	*2178 831
	Y1 (codes 501, 511, 521)(blue)	2	---- ---	2177 376	---- ---	2177 376	
	(codes 502, 512, 522)(green)	2	---- ---	2177 377	---- ---	2177 377	
	(codes 503, 513, 523)(cordovan)	2	---- ---	2177 378	---- ---	2177 378	
	(code 553) (tan)	2	---- ---	2177 380	---- ---	2177 380	2177 380
	(codes 515, 555) (red)	2	---- ---	2177 379	---- ---	2177 379	2177 379
	(codes 504, 514, 516, 524, 534, 556, 557) (black)	★	---- ---	2163 695	---- ---	2163 695	2163 695
23-113-30	WEATHERCORD, Door Lock Pillar						
	C1, C2 (black)	★	---- ---	---- ---	---- ---	2163 695	2163 695
	(Note: For Imperial Lock Pillar w/cord use Part Type Code 23-99-41)						
23-113-36	FILLER, Folding Top Bow						
	Y1 (front and center)	1	---- ---	---- ---	---- ---	---- ---	1246 543

★ Indicates use as required.
⊟ Indicates parts not listed in any previous parts book.
Right and left part numbers are on same line, first number is right, second number is left.
* Indicates change or addition.

Printed in U.S.A.
Prices and specifications subject to change without notice.
March 8, 1963 Supersedes May 1, 1962.

MyMopar.com

CODE	REMARKS	PER CAR	SED.	SP. 4 D.	SUB.	SP. CL. CP.	CV. CP.
23-113-50	WELT, Windshield Side Garnish Moulding to Instrument Panel						
	C1, C2, C3 (black)	2	1758 241	1758 241	1758 241	1758 241	1758 241
	Y1-L, Y1-M, Y1-H	1	---- ---	*2180 666-7	---- ---	*2180 666-7	*2180 666-7
23-113-84	WELT, Folding Top Header						
	C1, C2	★	---- ---	---- ---	---- ---	---- ---	2163 846
	Y1	★	---- ---	---- ---	---- ---	---- ---	2192 739
23-114-2	MATERIAL, Seat Cloth Trim						
	C1-L (54") (code 301) (blue)	★	*2185 297	*2185 297	---- ---	*2185 297	
	(code 302) (green plaid)	★	2186 067	2186 067	---- ---	2186 067	
	(code 303) (cocoa)	★	2185 298	2185 298	---- ---	2185 298	
	(code 304) (gray and black)	★	2185 299	2185 299	---- ---	2185 299	
	(code 305) (red)	★	2185 300	2185 300	---- ---	2185 300	
	(code 308) (turq. plaid)	★	2186 068	2186 068	---- ---	2186 068	
	(code 341) (blue)	★	*2186 165	*2186 165	---- ---	*2186 165	
	(code 343) (cocoa)	★	*2186 166	*2186 166	---- ---	*2186 166	
	(code 344)(gray & black)	★	*2186 167	*2186 167	---- ---	*2186 167	
	(code 345) (red)	★	*2186 168	*2186 168	---- ---	*2186 168	
	C3-H (63")						
	(codes 321, 331) (blue)	★	*2185 301	*2185 301			
	(codes 323, 333) (cocoa)	★	2185 302	2185 302			
	(codes 324, 334) (gray)	★	2185 303	2185 303			
	(code 335)	★	2185 304	2185 304			
	C2-M (60") (code 313)	★	---- ---	---- ---	---- ---	*2185 406	*2185 406
	(code 314)	★	---- ---	---- ---	---- ---	2185 407	2185 407
	(code 315)	★	---- ---	---- ---	---- ---	2185 408	2185 408
	Y1-L (67")						
	(code 501) (blue)	★	---- ---	*2185 349	---- ---	*2185 349	
	(code 502) (green)	★	---- ---	2185 350	---- ---	2185 350	
	(code 503) (cordovan)	★	---- ---	2185 351	---- ---	2185 351	
	(code 504) (black)	★	---- ---	2185 352	---- ---	2185 352	
	Y1-M, Y1-H (65")						
	(codes 511, 531) (blue)	★	---- ---	*2185 270	---- ---	*2185 270	
	(codes 512, 522) (green)	★	---- ---	2185 271	---- ---	2185 271	
	Y1-M, Y1-H (65")						
	(code 523) (cocoa)	★	---- ---	*2185 276	---- ---	*2185 276	
	(code 513) (cordovan)	★	---- ---	2185 273	---- ---	2185 273	
	(codes 514, 524, 534) (gray)	★	---- ---	2185 272	---- ---	2185 272	
	(code 515) (red)	★	---- ---	2185 274	---- ---	2185 274	
	(code 516) (black)	★	---- ---	2185 275	---- ---	2185 275	
	Y1-H (No. 2) (65") (code 531)	★	---- ---	*2185 305			
	(code 534)	★	---- ---	2185 307			
23-114-10	BINDING, 5/8 Wire on						
	C1-L, C2-M, Y1-M (white)	★	---- ---	---- ---	---- ---	---- ---	2177 529
	(black)	★	---- ---	---- ---	---- ---	---- ---	2171 884
23-114-14	HIDE, Leather						
	C2-M (code 453) (tan)	★	---- ---	---- ---	---- ---	2185 206	2185 206
	(code 454) (black)	★	---- ---	---- ---	---- ---	1874 607	1874 607
	(code 455) (red)	★	---- ---	---- ---	---- ---	2185 237	2185 237
	Y1-M(codes 511,521)(blue)	★	---- ---	2185 189	---- ---	2185 189	
	(codes 512, 522) (green)	★	---- ---	2185 190	---- ---	2185 190	
	(code 553) (tan)	★	---- ---	2185 206	---- ---	2185 206	2185 206
	(codes 514, 524) (gray)	★	---- ---	2185 192	---- ---	2185 192	
	(codes 515, 555) (red)	★	---- ---	2185 193	---- ---	2185 193	2185 193
	(codes 516, 556) (black)	★	---- ---	1912 660	---- ---	1912 660	1912 660
	(code 557) (white)	★	---- ---	2185 207	---- ---	2185 207	2185 207

★ Indicates use as required.
B Indicates parts not listed in any previous parts book.
March 8, 1963 Supersedes May 1, 1962.

Printed in U.S.A.
Prices and specifications subject to change without notice.
Right and left part numbers are on same line, first number is right, second number is left.
* Indicates change or addition.

MyMopar.com

CODE	REMARKS	PER CAR	SED.	SP. 4 D.	SUB.	SP. CL. CP.	CV. CP.
23-114-15	MATERIAL, Leather (imitation) Trim						
	C1-L (code 302)(28-AM-22) (50")(1553 lime green)	★	2186 099	2186 099	---- ---	2186 099	
	(19-C-22) (54")(1553 lime green)	★	2186 101	2186 101	---- ---	2186 101	
	(17-C-81) (54")(1553 lime green)	★	2186 103	2186 103	---- ---	2186 103	
	(code 308) (28-AM-22) (50")(1554 turq.)	★	2186 100	2186 100	---- ---	2186 100	
	(19-C-22) (54")(1554 turq.)	★	2186 102	2186 102	---- ---	2186 102	
	(17-C-81) (54")(1554 turq.)	★	2186 104	2186 104	---- ---	2186 104	
	(codes 302, 308)(28A-AM-22) (50")(1220-1 black frost)	★	1875 018	1875 018	---- ---	1875 018	
	(19A-C-22) (54")(1220-1 black frost)	★	1874 975	1874 975	---- ---	1874 975	
	C1-L, C2-M (codes 301, 331, 341, 401)						
	(28-AM-46) (50")(1501-1 blue)	★	---- ---	---- ---	*2185 177	---- ---	*2185 177
	(28-AM-22) (50")(1501-1 blue)	★	2185 141	2185 141	---- ---	2185 141	
	(24-CK-22) (54")(1501-1 blue)	★	2185 578	---- ---	2185 366	---- ---	2185 366
	(22-AR-22) (54")(1501-1 blue)	★	2185 320	2185 320			
	(19A-C-22) (54")(1501-1 blue)	★	2185 147	2185 147	---- ---	2185 147	
	(19B-C-22) (54")(1502-1 blue)	★	2185 164	---- ---	2185 164	---- ---	2185 164
	(19-C-22) (54")(1501-1 blue)	★	2185 147	2185 147	---- ---	2185 147	
	C1-L, C2-M, C3-H (codes 303, 313, 333, 343, 403, 413 423, 453, 463						
	(28-AM-46) (50")(1524 tan)	★	---- ---	*2185 526			
	(code 403) (1504-1 cocoa)	★	---- ---	---- ---	2185 518	---- ---	2185 518
	(28-AM-22) (50")(1504-1 cocoa)	★	2185 142	2185 142	2185 142	2185 142	
	(codes 313, 413, 453, 463) (1524 tan)	★	---- ---	2185 194	---- ---	2185 194	2185 194
	(24-CK-22) (54")(1504-1 cocoa)	★	2185 544	2185 544	---- ---	2185 544	
	(codes 313, 413, 453, 463) (1524 tan)	★	---- ---	2185 842	---- ---	2185 842	
	(22-AR-22) (54")(1504-1 cocoa)	★	2185 842	2185 842	2185 842		
	(19A-C-22) (54")(1504-1 cocoa)	★	2185 148	2185 148	---- ---	2185 148	
	(codes 313, 453, 463) (1514 tan)	★	---- ---	2185 201	---- ---	2185 201	2185 201
	(codes 403, 423) (1511 gray)	★	---- ---	---- ---	2185 157		
	(19B-C-22) (54")(415 black)	★	1874 974	1874 974	1874 974	1874 974	1874 974
	(code 463) (1528-1 tan)	★	---- ---	---- ---	---- ---	2185 197	2185 197
	(codes 333, 403) (1505-1 cordovan)	★	2185 166	2185 166	2185 166		
	C1-L, C2-M, C3-H (codes 304, 314, 334, 344, 404, 414, 424, 454, 455)						
	(28-AM-46) (50")(1220-1 black)	★	---- ---	*1875 822	*1875 822		
	(28-AM-22) (50")(1220-1 black frost)	★	---- ---	1875 018	1875 018	1875 018	1875 018
	(code 304) (1508-1 gray)	★	2185 143	2185 143	---- ---	2185 143	
	(24-CK-22) (54")(1508-1 gray)	★	---- ---	2185 598	---- ---	2185 598	
	(codes 404, 414, 454) (1220-1 black)	★	---- ---	1875 093	1875 093	1875 093	1875 093
	(22-AR-22) (54")(1508-1 gray)	★	2185 321	2185 321			
	(code 424) (1220-1 black)	★	---- ---	---- ---	2185 886		
	(19A-C-22) (54")(1511 gray)	★	2185 157	2185 157	2185 157	2185 157	2185 157

★ Indicates use as required.
⊟ Indicates parts not listed in any previous parts book.
Right and left part numbers are on same line, first number is right, second number is left.
* Indicates change or addition.

Printed in U.S.A.
Prices and specifications subject to change without notice.
March 8, 1963 Supersedes May 1, 1962.

MyMopar.com

CODE	REMARKS	PER CAR	SED.	SP. 4D.	SUB.	SP. CL. CP.	CV. CP.
23-114-15	MATERIAL, Leather (imitation) Trim - Cont'd						
	C1-L, C2-M, C3-H						
	(19B-C-22) (54") (415 black)	★	1874 974	1874 974	1874 974	1874 974	1874 974
	(19-C-22) (54")(1508-1 gray)	★	2185 149	2185 149	---- ---	2185 149	
	(codes 404, 414, 424, 444, 454) (1220-1 black)	★	1874 975	1874 975	1874 975	---- ---	1874 975
	(code 444) (32-CS-22) (50")(902 gray)	★	2185 119				
	19 oz. (54")(1516 white) (for padded visor)	★	2185 329	---- ---	2185 329		
	C1-L, C2-M, C3-H (codes 315, 345, 405, 415, 425, 455, 465)						
	(19-C-22) (54")(1509 red)	★	---- ---	*2185 151	---- ---	*2185 151	*2185 151
	(19A-C-22) (54")(1509 red)	★	---- ---	1874 974	---- ---	2185 151	
	(19B-C-22) (54")(415 black)	★	---- ---	*1874 974	---- ---	1874 974	1874 974
	(19-DS-22) (54")(1509 red)	★	---- ---	*2185 545	---- ---	*2185 545	*2185 545
	(28-AM-22) (50")(1509 red)	★	---- ---	2185 150	---- ---	2185 150	2185 150
	(28-AM-46) (50")(1509 red)	★	---- ---	2185 178			
	(22-AR-22) (54")(1509 red)	★	---- ---	2185 479			
	(code 463)						
	(19A-C-22) (54")(1514 tan)	★	---- ---	---- ---	---- ---	2185 201	
	(19B-C-22) (54")(1528-1 tan)	★	---- ---	---- ---	---- ---	2185 197	2185 197
	(24-CK-22) (54")(1524 tan)	★	---- ---	---- ---	---- ---	2185 523	2185 523
	(28-AM-22) (50")(1524 tan)	★	---- ---	---- ---	---- ---	2185 194	2185 194
	Y1-L, Y1-M, Y1-H (codes 501, 511, 521)						
	(28A-AM-22) (50")(1502-1 blue)	★	---- ---	2185 148	---- ---	2185 148	
	(28-AM-22) (50")(1501-1 blue)	★	---- ---	2185 141	---- ---	2185 141	
	(22-AR-22) (54")(1501-1 blue)	★	---- ---	2185 320	---- ---	2185 320	
	(19A-C-22) (54")(1501-1 blue)	★	---- ---	2185 147			
	(19B-C-22) (54")(1500 blue)	★	---- ---	2185 155	---- ---	2185 155	
	(19C-C-22) (54")(1501-1 blue)	★	---- ---	2185 147	---- ---	2185 147	
	(19-C-22) (54")(1502-1 blue)	★	---- ---	2185 164	---- ---	2185 164	
	(codes 502, 512, 522)						
	(28A-AM-22) (50")(1507-1 green)	★	---- ---	2185 159	---- ---	2185 159	
	(28-AM-22) (50")(1506-1 green)	★	---- ---	2185 163	---- ---	2185 163	
	(22-AR-22) (54") (1506-1 green)	★	---- ---	2185 322	---- ---	2185 322	
	(19A-C-22) (54")(1506-1 green)	★	---- ---	2185 167	---- ---	2185 167	
	(19B-C-22) (54")(1515 green)	★	---- ---	2185 188	---- ---	2185 188	
	(19C-C-22) (54")(1506-1 green)	★	---- ---	2185 167	---- ---	2185 167	
	(19-C-22) (54")(1502-1 green)	★	---- ---	2185 165	---- ---	2185 165	
	Y1-L, Y1-M, Y1-H (codes 504, 514, 524, 534)						
	(28A-AM-22) (50")(415 black)	★	---- ---	1831 003	---- ---	1831 003	
	(28-AM-22) (50")(1508-1 gray)	★	---- ---	2185 143	---- ---	2185 143	
	(22-AR-22) (54")(1508-1 gray)	★	---- ---	2185 321	---- ---	2185 321	
	(19A-C-22) (54")(1508-1 gray)	★	---- ---	2185 149	---- ---	2185 149	
	(19B-C-22) (54")(1511 gray)	★	---- ---	2185 157	---- ---	2185 157	
	(19C-C-22) (54")(1508-1 gray)	★	---- ---	2185 149	---- ---	2185 149	
	(19-C-22) (54")(415 black)	★	---- ---	1874 974	---- ---	1874 974	
	Y1-M (codes 515, 555)						
	(28-AM-22) (54")(1513 red)	★	---- ---	2185 195	---- ---	2185 195	2185 195
	(22-AR-22) (54")(1513 red)	★	---- ---	2185 203	---- ---	2185 203	
	(19B-C-22) (54")(1513 red)	★	---- ---	2185 198	---- ---	2185 198	2185 198
	(19-C-22) (54")(1513 red)	★	---- ---	2185 198	---- ---	2185 198	

★ Indicates use as required.
⊟ Indicates parts not listed in any previous parts book.
March 8, 1963 Supersedes May 1, 1962.

Printed in U.S.A.
Prices and specifications subject to change without notice.
Right and left part numbers are on same line, first number is right, second number is left.
* Indicates change or addition.

MyMopar.com

CODE	REMARKS	PER CAR	SED.	SP. 4 D.	SUB.	SP. CL. CP.	CV. CP.
23-114-15	MATERIAL, Leather (imitation) Trim - Cont'd						
	Y1-M, Y1-H (codes 503, 513, 523, 553)						
	(28A-AM-22) (50")(1505-1 cordovan)	★	---- ---	2185 160	---- ---	2185 160	
	(28-AM-22) (50")(1504-1 cocoa)	★	---- ---	2185 142	---- ---	2185 142	
	(code 553) (1524 tan)	★	---- ---	2185 194	---- ---	2185 194	2185 194
	(22-AR-22) (54")(1504-1 cocoa)	★	---- ---	2185 323	---- ---	2185 323	
	(19A-C-22) (54")(1504-1 cocoa)	★	---- ---	2185 148	---- ---	2185 148	
	(19B-C-22) (54")(1503 beige)	★	---- ---	2185 156	---- ---	2185 156	
	(code 553) (1514 tan)	★	---- ---	2185 201	---- ---	2185 201	
	(19C-C-22) (54")(1504-1 cocoa)	★	---- ---	2185 148	---- ---	2185 148	
	(19-C-22) (54")(1505-1 cordovan)	★	---- ---	2185 166	---- ---	2185 166	
	Y1-M, Y1-H(code 553)(1528-1tan)	★	---- ---	2185 197	---- ---	2185 197	
	Y1-M (codes 516, 556)						
	(28-AM-22) (54")(415 black)	★	---- ---	1831 003	---- ---	1831 003	1831 003
	(19B-C-22) (54")(1511 gray)	★	---- ---	2185 157	---- ---	2185 157	
	(19-C-22) (54")(415 black)	★	---- ---	1874 974	---- ---	1874 974	
	(code 557, 567)						
	(28-AM-22) (54")(1512 white)	★	---- ---	2185 196	---- ---	2185 196	2185 196
	(19-C-22) (54")(415 black)	★	---- ---	1874 974	---- ---	1874 974	1874 974
23-115-4	NUT, Front Seat Back to Cushion Mounting						
	C1, C2, Y1 (up to serial No. 8223-133063)	4	---- ---	---- ---	---- ---	*1918 296	*1918 296
	(push nut) (after)	4	---- ---	---- ---	---- ---	*2092 246	*2092 246
	(push nut not used with bucket seats)	2	---- ---	---- ---	---- ---	*2160 648	*2160 648
23-115-5	WASHER, Front Seat Center Arm Rest Trim						
	C2	2	---- ---	---- ---	---- ---	1918 299	1918 299
23-115-6	SCREW, Front Seat Back to Cushion Mounting						
	C2 (up to serial No. 8223-133063)	4	---- ---	---- ---	---- ---	*1918 587	*1918 587
	(pin) (after)	4	---- ---	---- ---	---- ---	*2410 054	*2410 054
23-115-10	SCREW, Front Seat Center Arm Rest to Cushion Mounting						
	C2	2	---- ---	---- ---	---- ---	2092 212	2092 212

★ Indicates use as required.
⊟ Indicates parts not listed in any previous parts book.
Right and left part numbers are on same line, first number is right, second number is left.
* Indicates change or addition.

Printed in U.S.A.
Prices and specifications subject to change without notice.
March 8, 1963.

MyMopar.com

CODE	REMARKS	PER CAR	SED.	SP. 4 D.	SUB.	SP. CL. CP.	CV. CP.

NOTES

★ Indicates use as required.
⊟ Indicates parts not listed in any previous parts book.
March 8, 1963.

Printed in U.S.A.
Prices and specifications subject to change without notice.
Right and left part numbers are on same line, first number is right, second number is left.
* Indicates change or addition.

MyMopar.com

1962 DODGE
1962 DART
1962 LANCER

INTERIOR TRIM

HOW TO USE INTERIOR TRIM ILLUSTRATIONS

The illustrations in this section are actual and each body style showing the Interior Trim is included.

The letters shown on the illustration indicate the description of the part and the part type code when referred to the legend which appears preceding the listing of the parts. The letters are consistent throughout the illustrations as "A" is always a Door Trim Panel, Code 23-92-5.

The numbers on the illustration indicate the distribution of material and type of material used. The numbers may vary with each illustration. The legend appears on the illustration.

For complete information on "How to Order" Trim Parts, see Mopar Parts Price List.

MyMopar.com

1962 LANCER AND DART - S SERIES

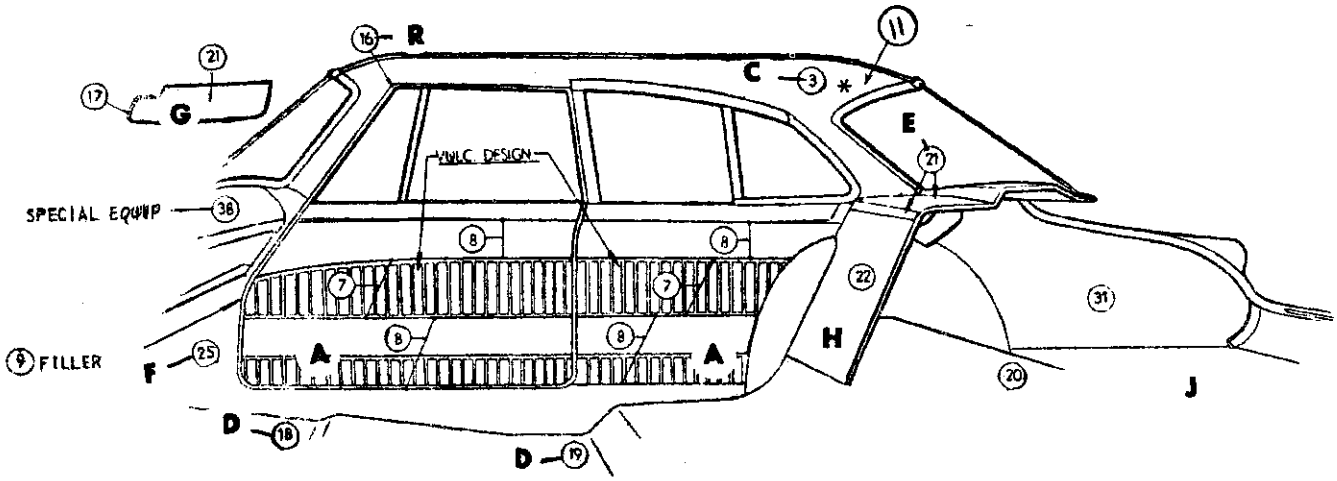

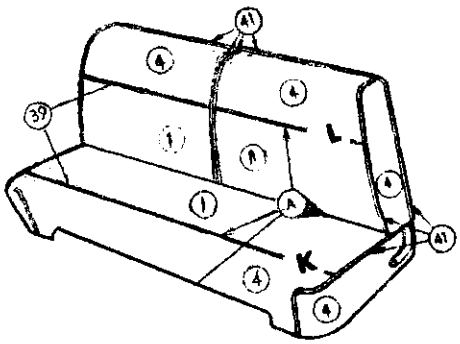

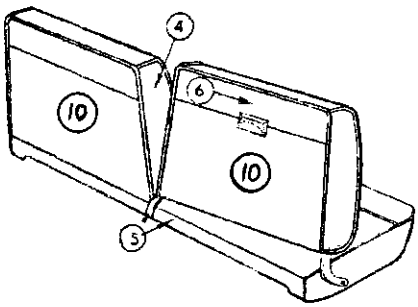

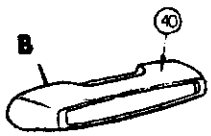

DOOR ARMREST

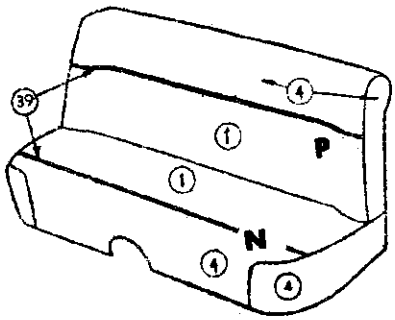

DISTRIBUTION OF MATERIAL

1	BODY CLOTH 1	
2	BODY CLOTH 2	
3	HEADLINING	
4	IMITATION LEATHER	32-CH-22
5	IMITATION LEATHER	32A-CH-22
6	IMITATION LEATHER	34-DA-22
7	IMITATION LEATHER	21A-BE-22
8	IMITATION LEATHER	21-BE-22
9	IMITATION LEATHER	19-C-22
10	IMITATION LEATHER	25A-CV-22
11	IMITATION LEATHER	12-Y-71
16	LACE	
17	EXTRUDED VINYL	
18	FLOOR COVERING-FRONT	
19	FLOOR COVERING-REAR	
20	FLOOR COVERING-LUGG. COMPT.	
21	EMBOSSED CARDBOARD	
22	CARDBOARD	
23	PRINTED CARDBOARD	
25	HARDBOARD	
30	PLASTIC	
31	PAINT	
32	METAL	
33	MOULDING	
36	MYLAR	
38	MOULDED RESIN	
39	EXTRUDED VINYL WELT NO. 2	
40	PLASTISOL	
41	EXTRUDED VINYL WELT NO. 1	
*	CLOTH TO USE VINYL	

Distribution Drawing Legend Page Appears Following Illustration Section

Codes 611, 614, 615

SLL-211A

1962 LANCER SL1-L CLUB SEDAN CLOTH AND IMITATION LEATHER

MyMopar.com

1962 LANCER AND DART - S SERIES

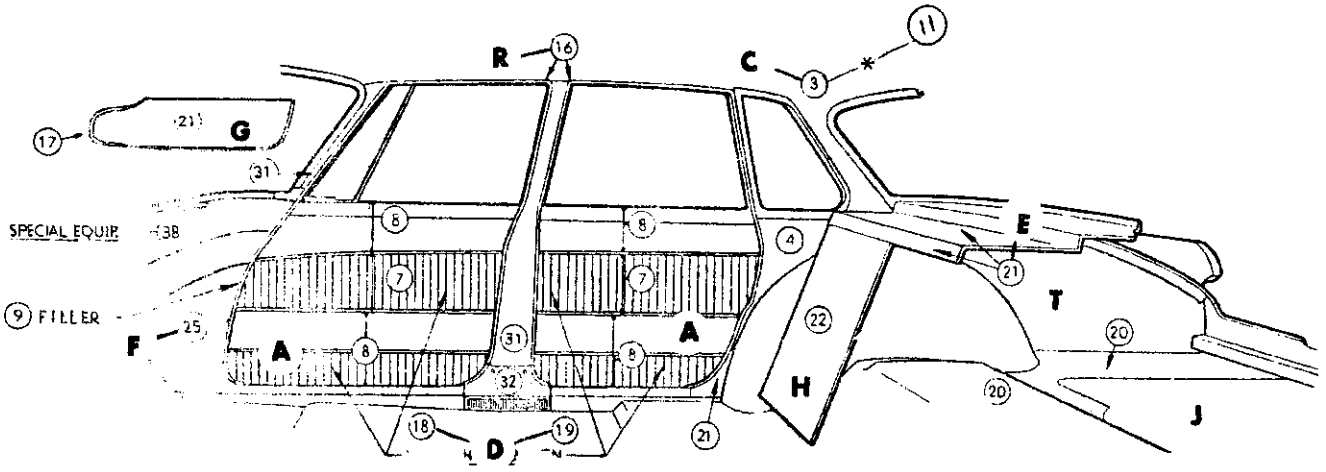

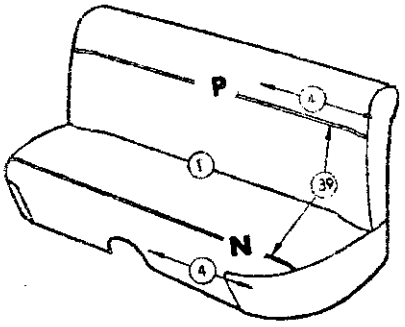

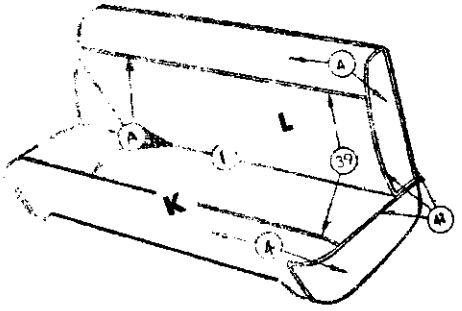

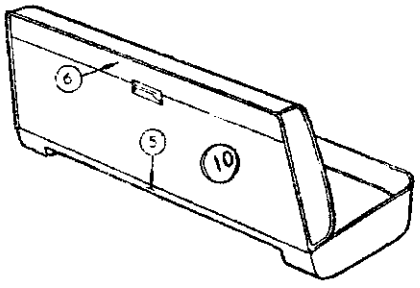

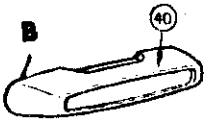

FRONT & REAR DOOR ARMREST

DISTRIBUTION OF MATERIAL

1	BODY CLOTH 1	
2	BODY CLOTH 2	
3	HEADLINING	
4	IMITATION LEATHER	32-CH-22
5	IMITATION LEATHER	32A-CH-22
6	IMITATION LEATHER	34-DA-22
7	IMITATION LEATHER	21A-BE-22
8	IMITATION LEATHER	21-BE-22
9	IMITATION LEATHER	19-C-22
10	IMITATION LEATHER	25A-CV-22
11	IMITATION LEATHER	12-Y-71
16	LACE	
17	EXTRUDED VINYL	
18	FLOOR COVERING-FRONT-RUBBER	
19	FLOOR COVERING-REAR-RUBBER	
20	FLOOR COVERING-LUGG. COMPT. PRINTED JUTE	
21	EMBOSSED CARDBOARD	
22	CARDBOARD	
23	CARDBOARD	
25	HARDBOARD	
30	PLASTIC	
31	PAINT	
32	METAL	
33	MOULDING	
36	MYLAR	
38	MOULDED RESIN	
39	EXTRUDED VINYL WELT NO. 2	
40	PLASTISOL	

* CLOTH TO USE VINYL

Distribution Drawing Legend Page Appears Following Illustration Section

Codes 611, 614, 615

SLL-411A

1962 LANCER SL1-L 4 DOOR SEDAN IMITATION LEATHER AND CLOTH

MyMopar.com

1962 LANCER AND DART - S SERIES

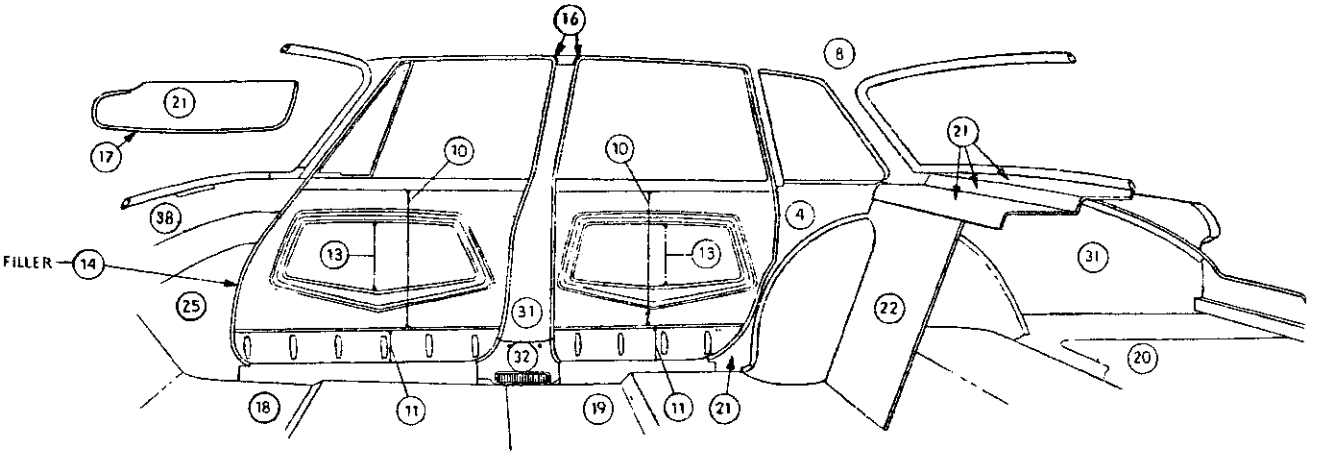

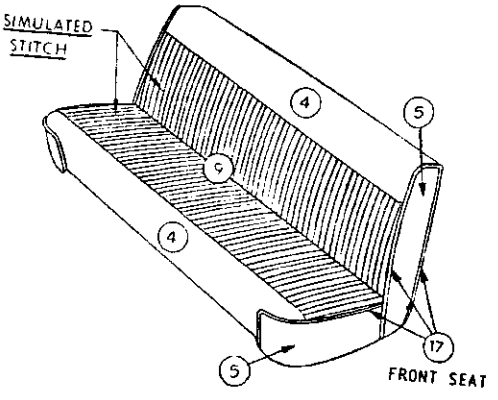

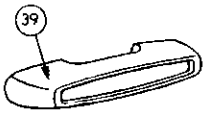

FRONT & REAR DOOR ARM RESTS

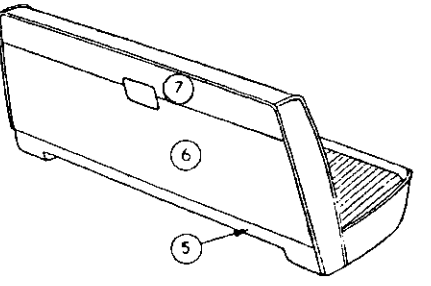

FRONT SEAT (BACK)

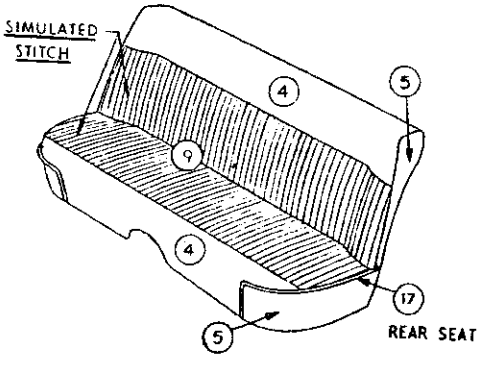

DISTRIBUTION OF MATERIAL

4	IMITATION LEATHER	28-CH-22
5	IMITATION LEATHER	28A-CH-22
6	IMITATION LEATHER	28-DA-22
7	IMITATION LEATHER	28-DA-22
8	IMITATION LEATHER	18-T-16
9	IMITATION LEATHER	32-DG-22
10	IMITATION LEATHER	.012-L-22
11	IMITATION LEATHER	.012A-L-22
13	IMITATION LEATHER	21-BE-67
14	IMITATION LEATHER	19-C-22
16	LACE	
17	EXTRUDED VINYL	
18	FLOOR COVERING-FRONT-RUBBER	
19	FLOOR COVERING-REAR-RUBBER	
20	FLOOR COVERING-LUGG. COMPT. PRINTED JUTE	
21	EMBOSSED CARDBOARD	
22	CARDBOARD	
23	PRINTED CARDBOARD	
25	HARDBOARD	
31	PAINT	
32	METAL	
36	MYLAR	
38	MOULDED RESIN	

Distribution Drawing Legend Page Appears Following Illustration Section

Code 664

SLL-414 1962 LANCER SL1-L 4 DOOR SEDAN
IMITATION LEATHER

MyMopar.com

CODE	REMARKS	PER CAR	SED.	SP. 4 D.	SUB.	SP. CL. CP.	CV. CP.

NOTES

★ Indicates use as required.
⊟ Indicates parts not listed in any previous parts book.

Printed in U.S.A.
Prices and specifications subject to change without notice.
November 30, 1961.

MyMopar.com

1962 LANCER AND DART - S SERIES

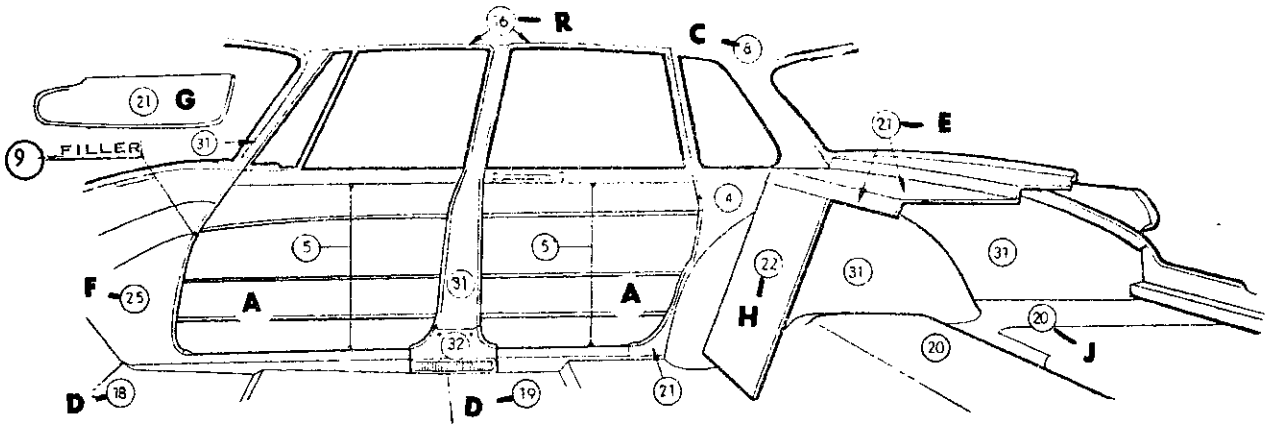

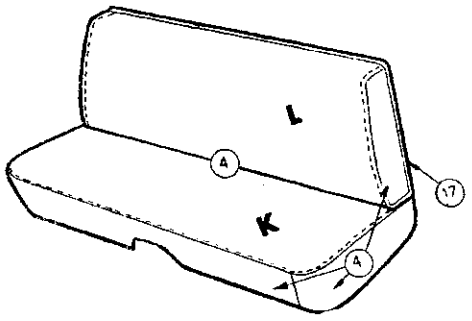

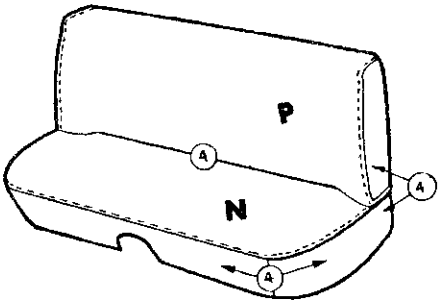

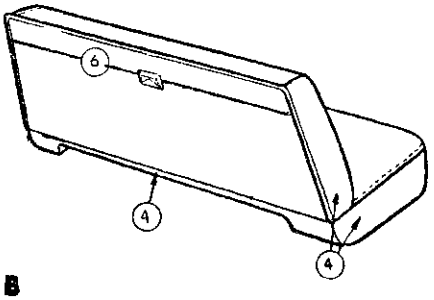

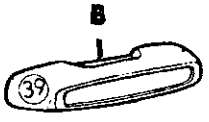

DOOR ARMREST

DISTRIBUTION OF MATERIAL

4	IMITATION LEATHER	32-CH-22
5	IMITATION LEATHER	19-CT-22
6	IMITATION LEATHER	32-DA-22
8	IMITATION LEATHER	12-Y-71
9	IMITATION LEATHER	19-C-22
16	LACE	
17	EXTRUDED VINYL	
18	FLOOR COVERING-FRONT-RUBBER	
19	FLOOR COVERINR-REAR-RUBBER	
20	FLOOR COVERING-LUGG. COMPT. PRINTED JUTE	
21	EMBOSSED CARDBOARD	
22	CARDBOARD	
25	HARDBOARD	
30	PLASTIC	
31	PAINT	
32	METAL	
36	MYLAR	
39	PLASTISOL	

Distribution Drawing Legend Page Appears Following Illustration Section

Code 694

SLL-414A 1962 LANCER SL1-L 4 DOOR SEDAN
IMITATION LEATHER COMBINATION

MyMopar.com

1962 LANCER AND DART - S SERIES

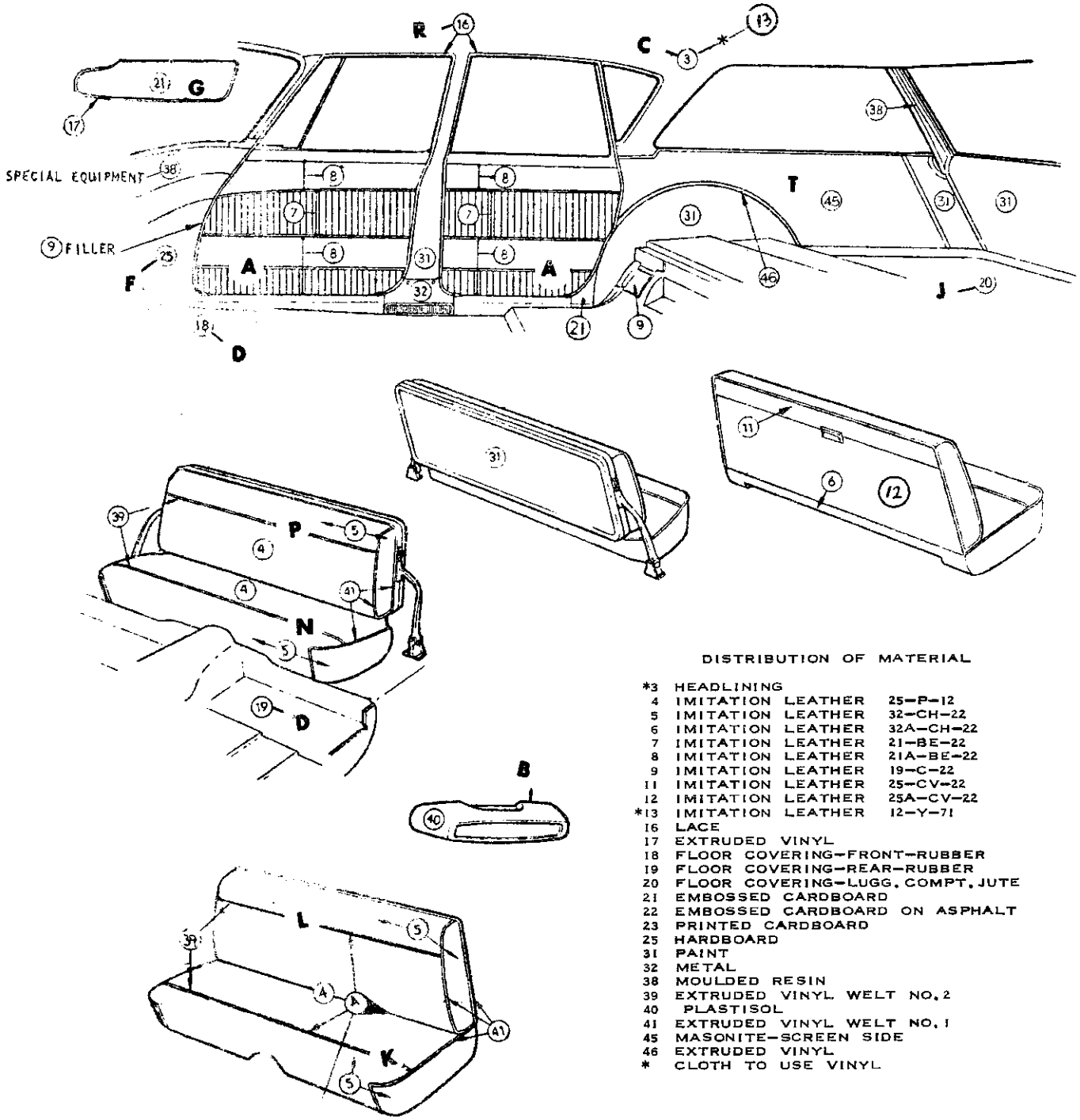

DISTRIBUTION OF MATERIAL

*3	HEADLINING	
4	IMITATION LEATHER	25-P-12
5	IMITATION LEATHER	32-CH-22
6	IMITATION LEATHER	32A-CH-22
7	IMITATION LEATHER	21-BE-22
8	IMITATION LEATHER	21A-BE-22
9	IMITATION LEATHER	19-C-22
11	IMITATION LEATHER	25-CV-22
12	IMITATION LEATHER	25A-CV-22
*13	IMITATION LEATHER	12-Y-71
16	LACE	
17	EXTRUDED VINYL	
18	FLOOR COVERING-FRONT-RUBBER	
19	FLOOR COVERING-REAR-RUBBER	
20	FLOOR COVERING-LUGG. COMPT. JUTE	
21	EMBOSSED CARDBOARD	
22	EMBOSSED CARDBOARD ON ASPHALT	
23	PRINTED CARDBOARD	
25	HARDBOARD	
31	PAINT	
32	METAL	
38	MOULDED RESIN	
39	EXTRUDED VINYL WELT NO. 2	
40	PLASTISOL	
41	EXTRUDED VINYL WELT NO. 1	
45	MASONITE-SCREEN SIDE	
46	EXTRUDED VINYL	
*	CLOTH TO USE VINYL	

Distribution Drawing Legend Page Appears Following Illustration Section

Codes 641, 644, 645

SLL-454A 1962 LANCER SL1-L 4 DOOR STATION WAGON
IMITATION LEATHER COMBINATION

MyMopar.com

1962 LANCER AND DART - S SERIES

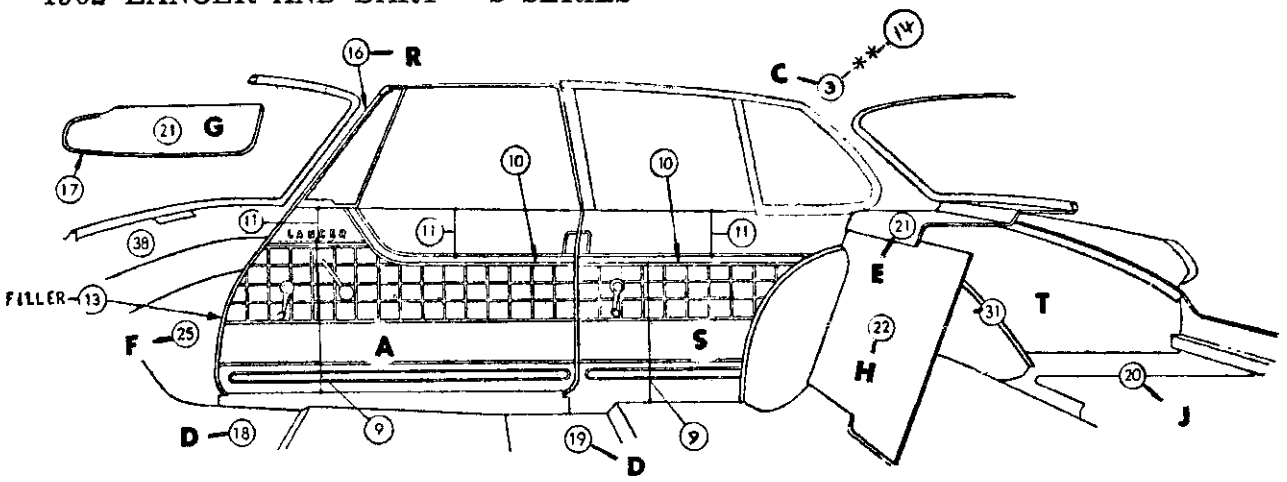

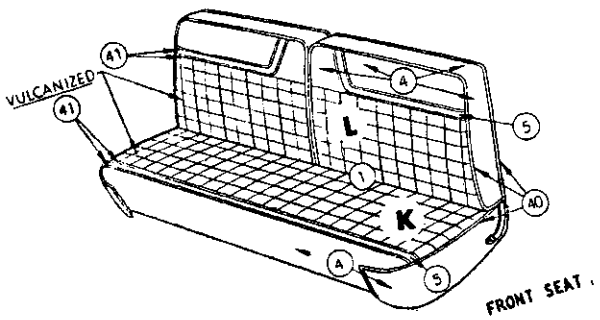

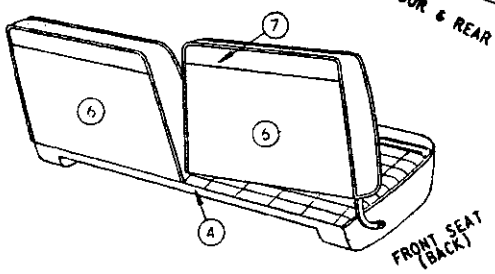

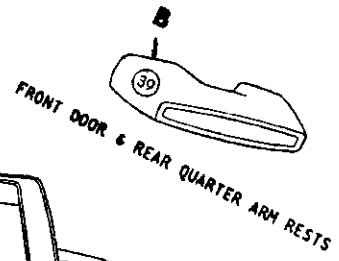

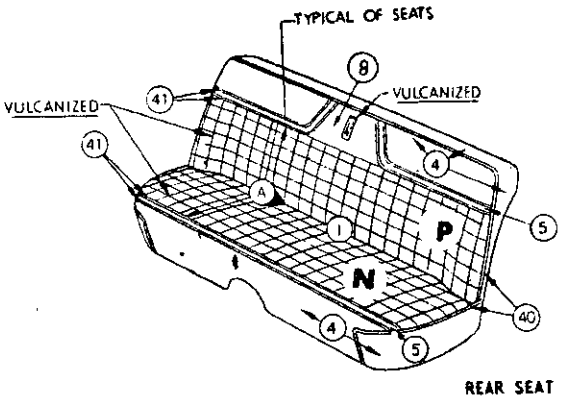

DISTRIBUTION OF MATERIAL

**	CLOTH TO USE VINYL	
1	BODY CLOTH 1	
3	HEADLINING	
*4	IMITATION LEATHER	32-CH-22
5	IMITATION LEATHER	28A-CH-22
6	IMITATION LEATHER	28-DA-22
7	IMITATION LEATHER	28A-DA-22
8	IMITATION LEATHER	46-DH-22
9	IMITATION LEATHER	.012-L-22
10	IMITATION LEATHER	21A-CM-22
11	IMITATION LEATHER	21-CM-22
13	IMITATION LEATHER	19-C-22
**14	IMITATION LEATHER	12-Y-71
16	LACE	
17	EXTRUDED VINYL	
18	FLOOR COVERING-FRONT-RUBBER	
19	FLOOR COVERING-REAR-RUBBER	
20	FLOOR COVERING-LUGG. COMPT. PRINTED JUTE	
21	EMBOSSED CARDBOARD	
22	CARDBOARD	
25	HARDBOARD	
30	PLASTIC	
31	PAINT	
32	METAL	
36	MYLAR	
38	MOULDED RESIN	
39	PLASTISOL	
40	EXTRUDED VINYL WELT NO. 1	
41	EXTRUDED VINYL WELT NO. 2	
*	28-CH-22 CODES 632-633-635	

Distribution Drawing Legend Page Appears Following Illustration Section

Codes 631, 632, 633, 635

SLH-211 1962 LANCER SL1-H 2 DOOR SEDAN
CLOTH AND IMITATION LEATHER

MyMopar.com

1962 LANCER AND DART - S SERIES

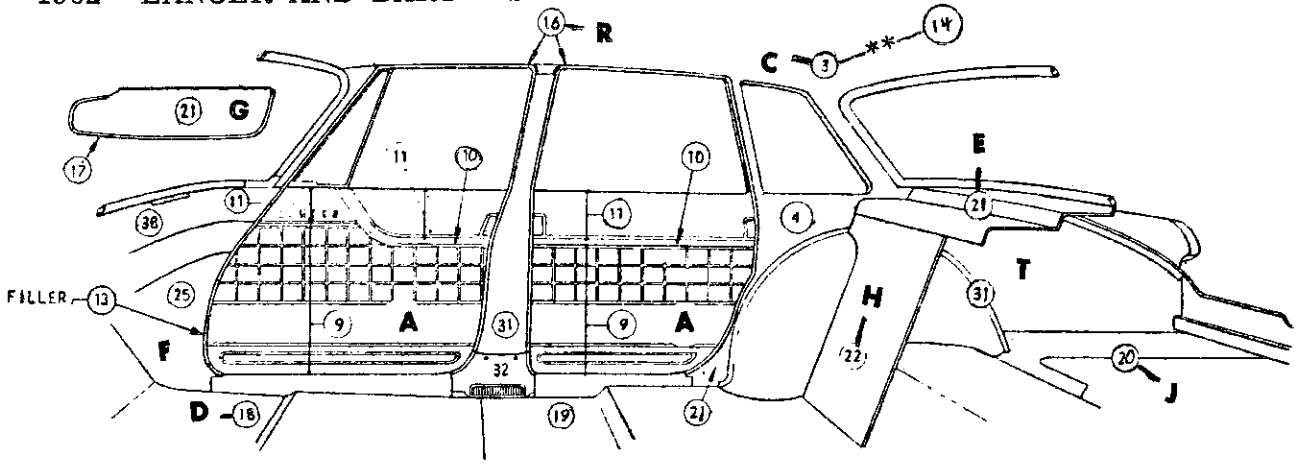

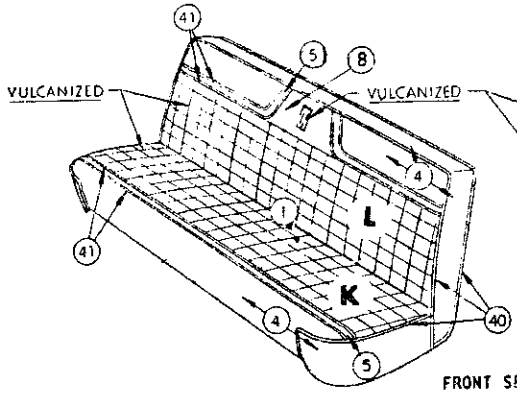

FRONT SEAT

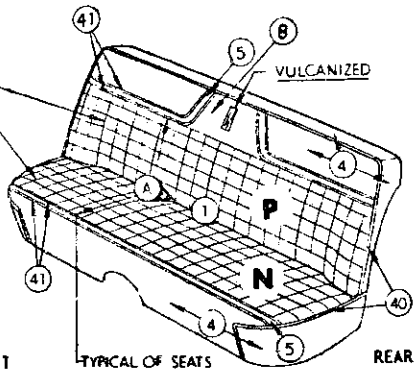

TYPICAL OF SEATS

REAR SEAT

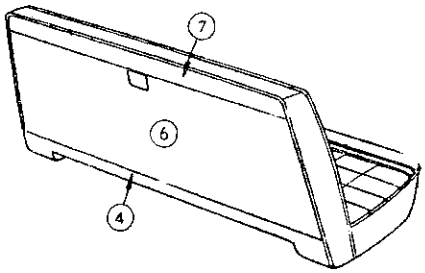

FRONT SEAT (BACK)

FRONT & REAR DOOR ARM RESTS

DISTRIBUTION OF MATERIAL

**	CLOTH TO USE VINYL	
1	BODY CLOTH 1	
**3	HEADLINING	
*4	IMITATION LEATHER	32-CH-22
5	IMITATION LEATHER	28A-CH-22
6	IMITATION LEATHER	28-DA-22
7	IMITATION LEATHER	28A-DA-22
8	IMITATION LEATHER	46-DH-22
9	IMITATION LEATHER	.012-L-22
10	IMITATION LEATHER	21A-CM-22
11	IMITATION LEATHER	21-CM-22
13	IMITATION LEATHER	19-C-22
**14	IMITATION LEATHER	12-Y-71
16	LACE	
17	EXTRUDED VINYL	
18	FLOOR COVERING-FRONT-RUBBER	
19	FLOOR COVERING-REAR-RUBBER	
20	FLOOR COVERING-CARGO COMPT. PRINTED JUTE	
21	EMBOSSED CARDBOARD	
22	EMBOSSED CARDBOARD ON ASPHALT	
25	HARDBOARD	
31	PAINT	
32	METAL	
38	MOULDED RESIN	
39	PLASTISOL	
40	EXTRUDED VINYL WELT NO. 1	
41	EXTRUDED VINYL WELT NO. 2	
*	28-CH-22 CODES 632-633-635	

Distribution Drawing Legend Page Appears Following Illustration Section

Codes 631, 632, 633, 635

SLH-411

1962 LANCER SL1-H 4 DOOR SEDAN
CLOTH AND IMITATION LEATHER

MyMopar.com

1962 LANCER AND DART - S SERIES

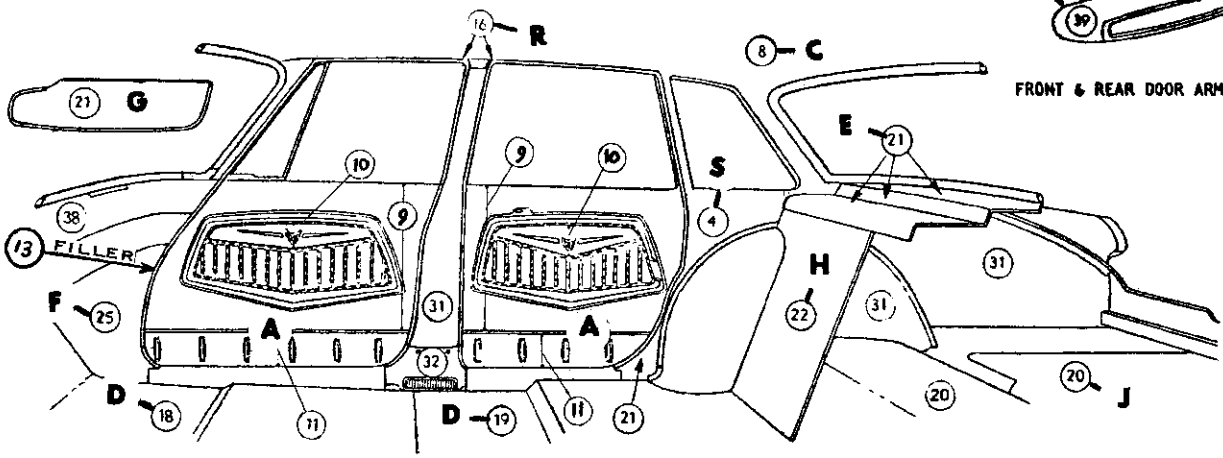

FRONT & REAR DOOR ARM RESTS

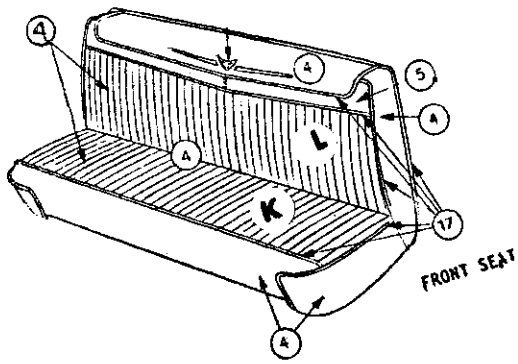

FRONT SEAT

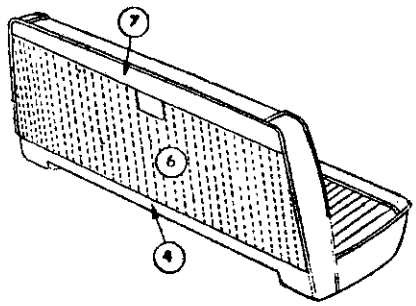

FRONT SEAT (BACK)

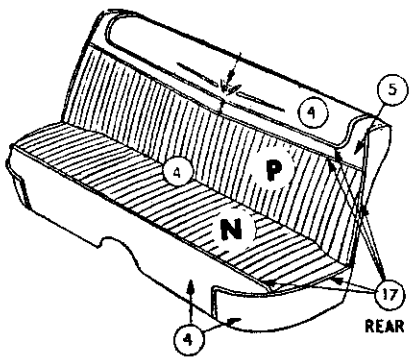

REAR SEAT

DISTRIBUTION OF MATERIAL

4	IMITATION LEATHER	28A-DA-22
5	IMITATION LEATHER	28-CH-22
6	IMITATION LEATHER	34-DB-22
7	IMITATION LEATHER	28-CH-22
8	IMITATION LEATHER	18-T-16
9	IMITATION LEATHER	21-CM-22
10	IMITATION LEATHER	21A-CM-22
11	IMITATION LEATHER	.012-L-22
13	IMITATION LEATHER	19-C-22
16	LACE	
17	EXTRUDED VINYL	
18	FLOOR COVERING-FRONT-CARPET	
19	FLOOR COVERING-REAR-CARPET	
20	FLOOR COVERING-LUGG. COMPT. PRINTED JUTE	
21	EMBOSSED CARDBOARD	
22	CARDBOARD	
25	HARDBOARD	
31	PAINT	
32	METAL	
38	MOULDED RESIN	
39	PLASTISOL	

Distribution Drawing Legend Page Appears Following Illustration Section

Codes 671, 675

SLH-414 1962 LANCER SL1-H 4 DOOR SEDAN
IMITATION LEATHER

MyMopar.com

1962 LANCER AND DART - S SERIES

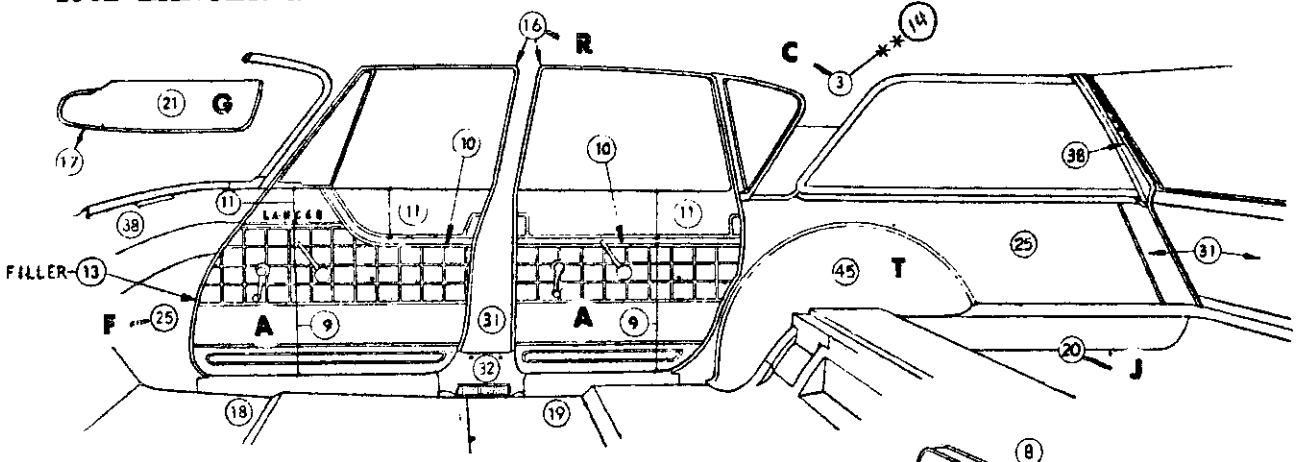

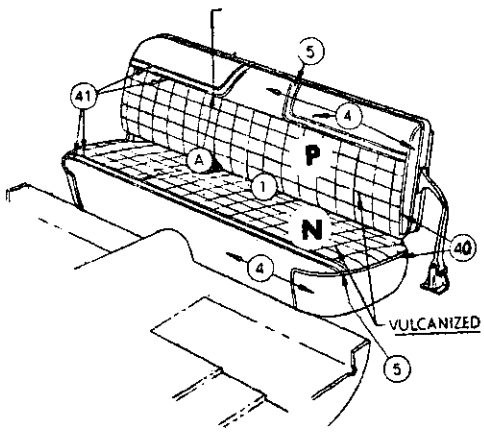

SECOND SEAT

FRONT & REAR DOOR ARM RESTS

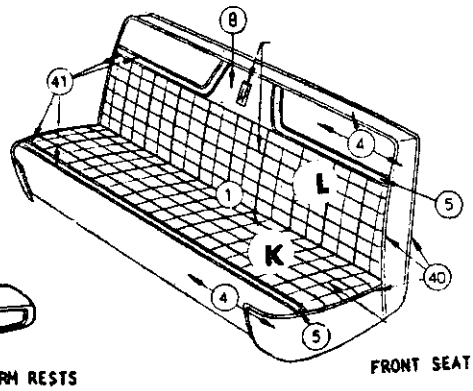

FRONT SEAT

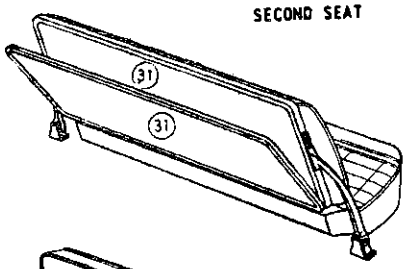

SECOND SEAT (BACK)

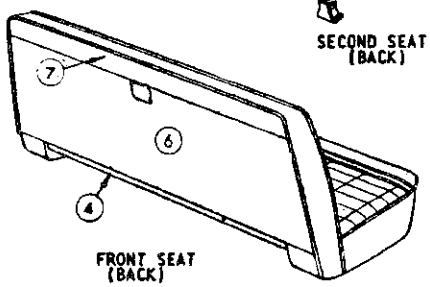

FRONT SEAT (BACK)

DISTRIBUTION OF MATERIAL

**	CLOTH TO USE VINYL	
1	BODY CLOTH 1	
**3	HEADLINING	
*4	IMITATION LEATHER	32-CH-22
5	IMITATION LEATHER	28A-CH-22
6	IMITATION LEATHER	28-DA-22
7	IMITATION LEATHER	28A-DA-22
8	IMITATION LEATHER	46-DH-22
9	IMITATION LEATHER	.012-L-22
10	IMITATION LEATHER	21A-CM-22
11	IMITATION LEATHER	21-CM-22
13	IMITATION LEATHER	19-C-22
**14	IMITATION LEATHER	12-Y-71
16	LACE	
17	EXTRUDED VINYL	
18	FLOOR COVERING-FRONT-RUBBER	
19	FLOOR COVERING-REAR-RUBBER	
20	FLOOR COVERING-CARGO COMPT. PRINTED JUTE	
21	EMBOSSED CARDBOARD	
25	HARDBOARD	
31	PAINT	
32	METAL	
38	MOULDED RESIN	
39	PLASTISOL	
40	EXTRUDED VINYL WELT NO. 1	
41	EXTRUDED VINYL WELT NO. 2	
45	POLYETHELENE	
*	28-CH-22 CODES 632-633-635	

Distribution Drawing Legend Page Appears Following Illustration Section

Codes 631, 632, 633, 635

SLH-451 1962 LANCER SL1-H 4 DOOR STATION WAGON
CLOTH AND IMITATION LEATHER

MyMopar.com

1962 LANCER AND DART - S SERIES

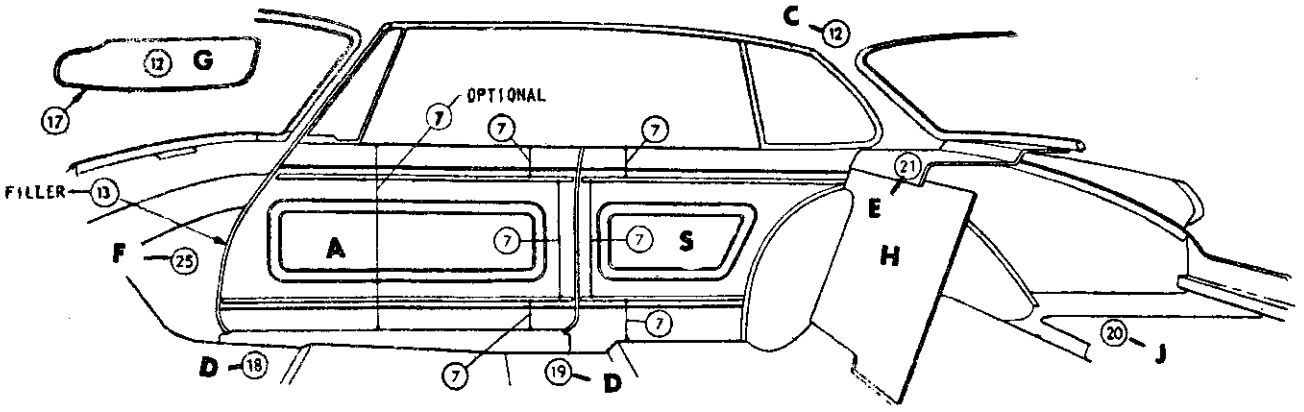

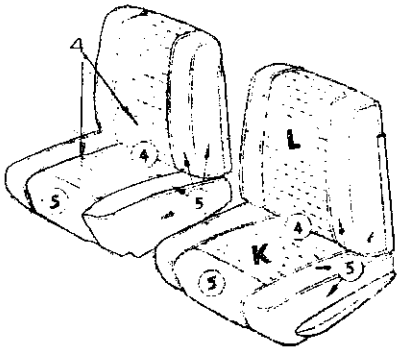

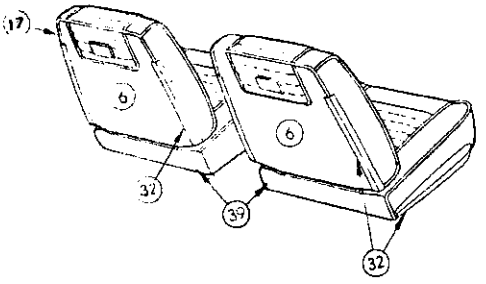

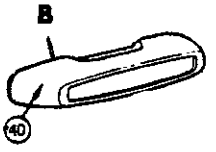

FRONT DOOR & REAR QUARTER ARM REST

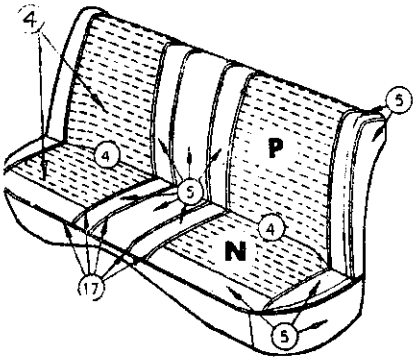

DISTRIBUTION OF MATERIAL

4	IMITATION LEATHER	28-AM-22
*5	IMITATION LEATHER	32-CH-22
6	IMITATION LEATHER	19-C-22
7	IMITATION LEATHER	19-DJ-22
12	IMITATION LEATHER	15-Y-61
13	IMITATION LEATHER	19-C-22
17	EXTRUDED VINYL	
18	FLOOR COVERING-FRONT-CARPET	
19	FLOOR COVERING-REAR-CARPET	
20	FLOOR COVERING-LUGG. COMPT. PRINTED JUTE	
21	EMBOSSED CARDBOARD	
25	HARDBOARD	
32	METAL	
39	CARPET	
40	PLASTISOL	
*	28-CH-22 CODES 652-653-655	

Distribution Drawing Legend Page Appears Following Illustration Section

Codes 651, 652, 653, 655

SLP-234 1962 LANCER SL1-P 2 DOOR HARD TOP
IMITATION LEATHER

MyMopar.com

1962 LANCER AND DART - S SERIES

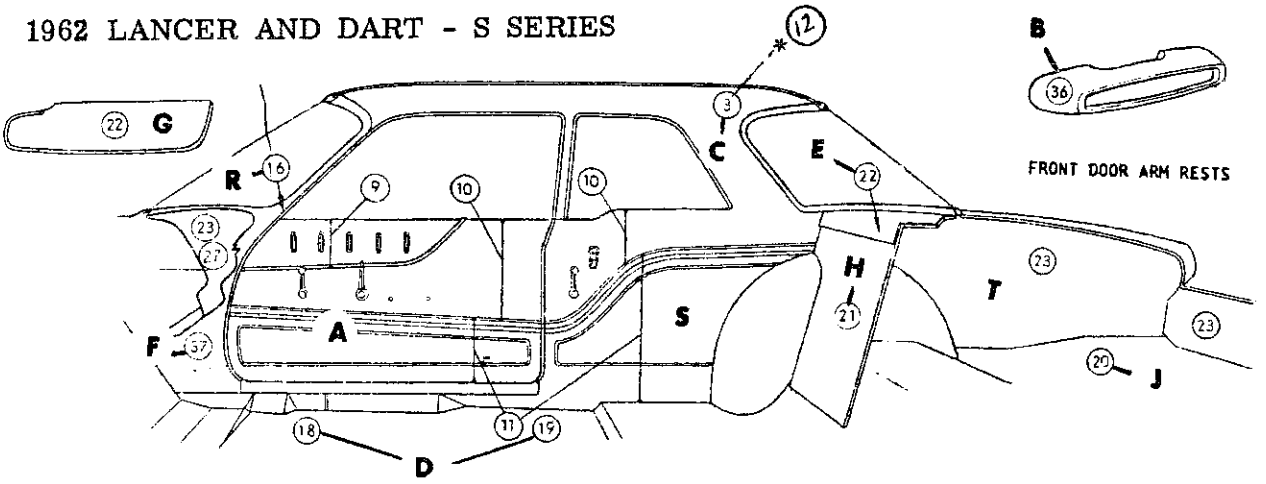

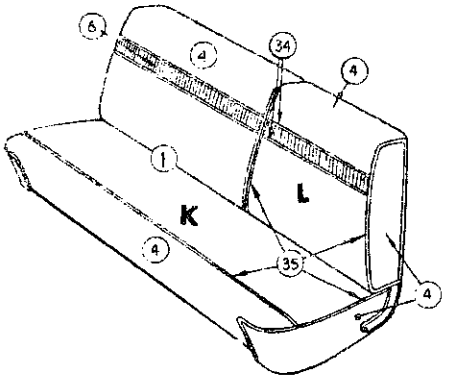

FRONT SEAT

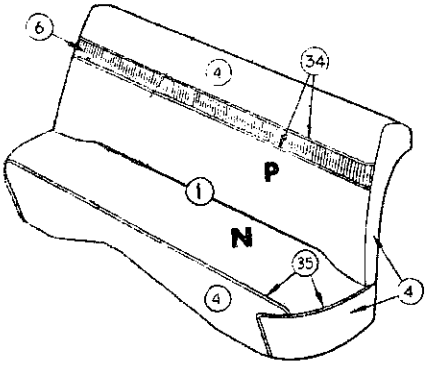

REAR SEAT

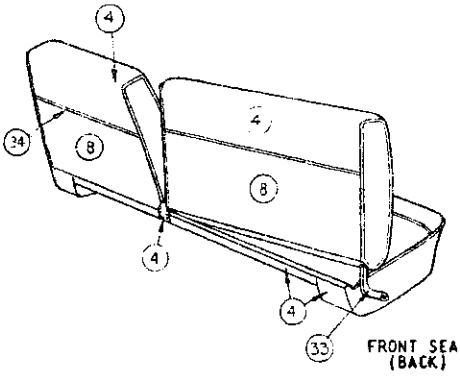

FRONT SEAT (BACK)

DISTRIBUTION OF MATERIAL

1	BODY CLOTH	
*3	HEADLINING	
4	IMITATION LEATHER	28-AM-22
6	IMITATION LEATHER	32-DD-66
8	IMITATION LEATHER	19-C-22
9	IMITATION LEATHER	21-CM-22
10	IMITATION LEATHER	19-DJ-22
11	IMITATION LEATHER	21-BE-22
*12	IMITATION LEATHER	12-Y-71
16	LACE	
18	FLOOR COVERING-FRONT-RUBBER	
19	FLOOR COVERING-REAR-RUBBER	
20	FLOOR COVERING-LUGG. COMPT. RUBBER	
21	CARDBOARD	
22	EMBOSSED CARDBOARD	
23	PAINT	
27	MOULDED RESIN	
33	PLASTIC	
34	EXTRUDED VINYL NO. 1	
35	EXTRUDED VINYL NO. 2	
36	PLASTISOL	
37	POLYETHLENE	
*	CLOTH TO USE VINYL	

Distribution Drawing Legend Page Appears Following Illustration Section

Codes 701, 703, 734

SDL-211 1962 DART SD1-L, SD2-L 2 DOOR SEDAN
CLOTH AND IMITATION LEATHER TRIM

MyMopar.com

1962 LANCER AND DART - S SERIES

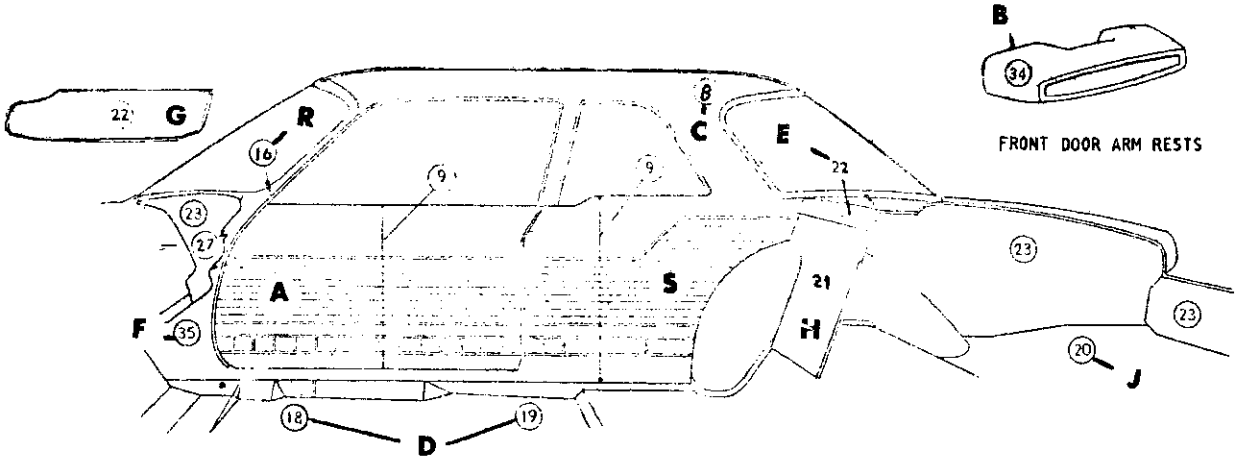

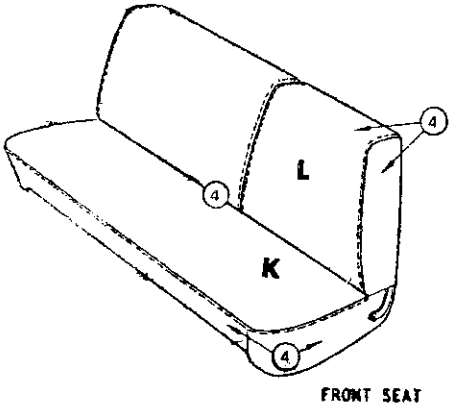

FRONT SEAT

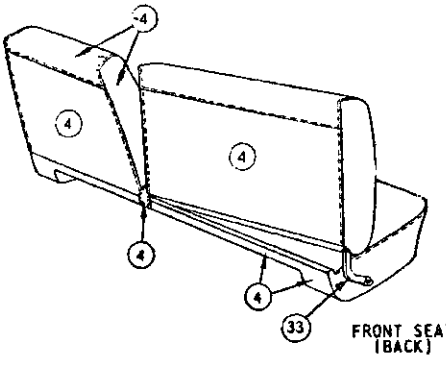

FRONT SEAT (BACK)

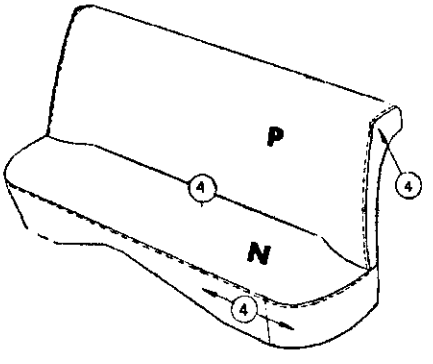

REAR SEAT

DISTRIBUTION OF MATERIAL

4	IMITATION LEATHER	37-CX-22
8	IMITATION LEATHER	12-Y-71
9	IMITATION LEATHER	19-DJ-22
16	LACE	
18	FLOOR COVERING-FRONT-RUBBER	
19	FLOOR COVERING-REAR-RUBBER	
20	FLOOR COVERING-LUGG. COMPT. RUBBER	
21	CARDBOARD	
22	EMBOSSED CARDBOARD	
23	PAINT	
27	MOULDED RESIN	
33	PLASTIC	
34	PLASTISOL	
35	POLYETHLENE	

Distribution Drawing Legend Page Appears Following Illustration Section

Code 894

SDL-214A

1962 DART SD1-L, SD2-L, SD1-M, SD2-M
2 DOOR SEDAN
IMITATION LEATHER

MyMopar.com

1962 LANCER AND DART - S SERIES

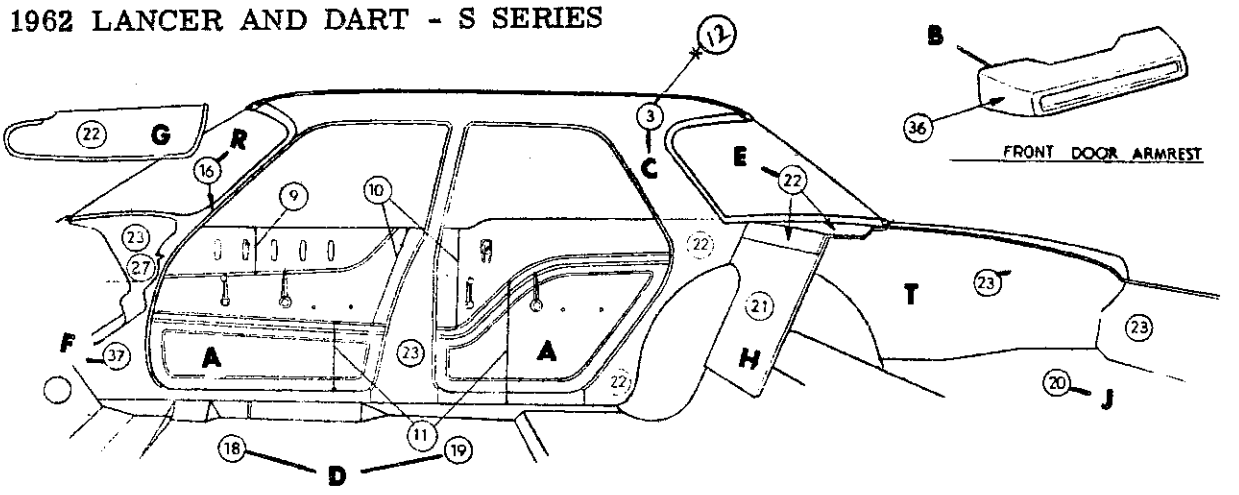

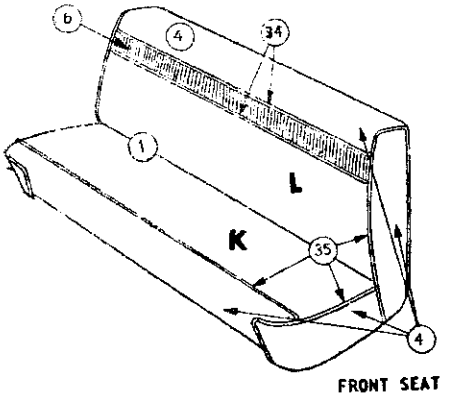

FRONT SEAT

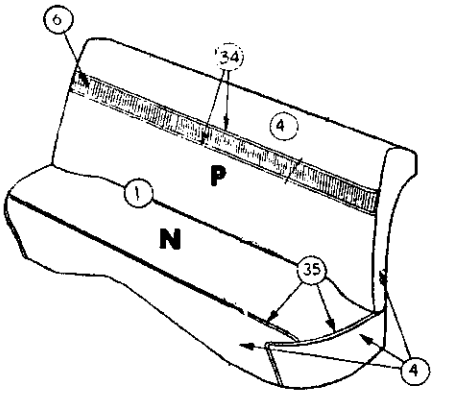

REAR SEAT

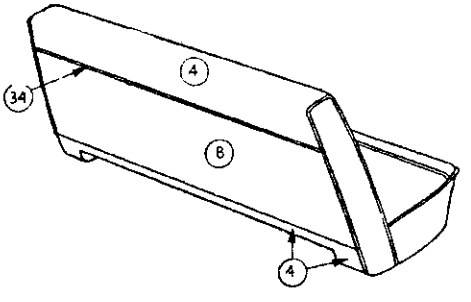

FRONT SEAT (BACK)

DISTRIBUTION OF MATERIAL

1	BODY CLOTH 1	
*3	HEADLINING	
4	IMITATION LEATHER	28-AM-22
5	IMITATION LEATHER	28A-AM-22
6	IMITATION LEATHER	32-DD-66
8	IMITATION LEATHER	19-C-22
9	IMITATION LEATHER	21-CM-22
10	IMITATION LEATHER	19-DJ-22
11	IMITATION LEATHER	21-BE-22
*12	IMITATION LEATHER	12-Y-71
16	LACE	
18	FLOOR COVERING-FRONT-RUBBER	
19	FLOOR COVERING-REAR-RUBBER	
20	FLOOR COVERING-LUGG. COMPT. RUBBER	
21	CARDBOARD	
22	EMBOSSED CARDBOARD	
23	PAINT	
27	MOULDED RESIN	
34	EXTRUDED VINYL NO. 1	
35	EXTRUDED VINYL NO. 2	
36	PLASTISOL	
37	POLYETHLENE	
*	CLOTH TO USE VINYL	

Distribution Drawing Legend Page Appears Following Illustration Section

Codes 701, 703, 704

SDL-411 1962 DART SD1-L, SD2-L 4 DOOR SEDAN
CLOTH AND IMITATION LEATHER COMBINATION

MyMopar.com

1962 LANCER AND DART - S SERIES

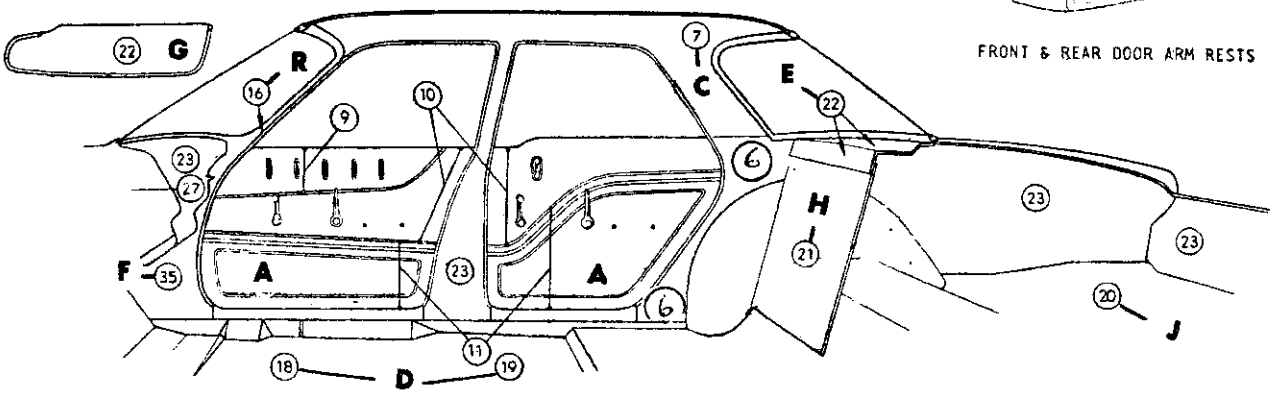

FRONT & REAR DOOR ARM RESTS

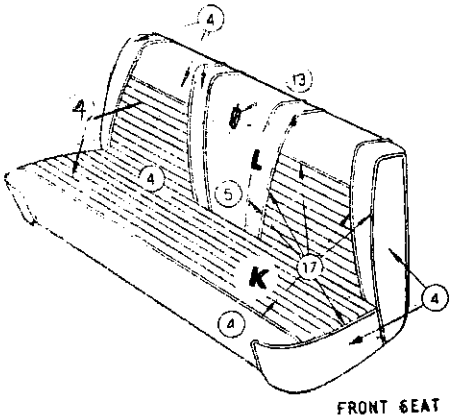

FRONT SEAT

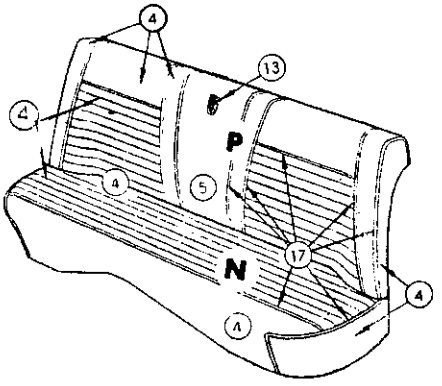

REAR SEAT

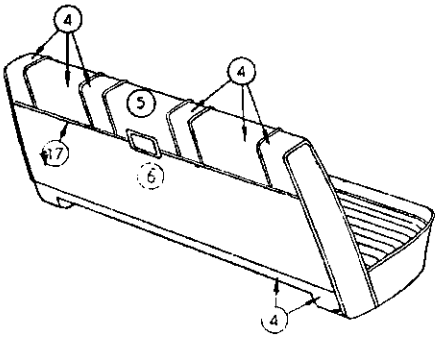

FRONT SEAT (BACK)

DISTRIBUTION OF MATERIAL

4	IMITATION LEATHER	28-AM-22
5	IMITATION LEATHER	28A-AM-22
6	IMITATION LEATHER	19-C-22
7	IMITATION LEATHER	18-T-16
9	IMITATION LEATHER	21-CM-22
10	IMITATION LEATHER	19-DJ-22
11	IMITATION LEATHER	21-BE-22
13	IMITATION LEATHER	.017-L-22
16	LACE	
17	EXTRUDED VINYL	
18	FLOOR COVERING-FRONT-RUBBER	
19	FLOOR COVERING-REAR-RUBBER	
20	FLOOR COVERING-LUGG. COMPT. RUBBER	
21	CARDBOARD	
22	EMBOSSED CARDBOARD	
23	PAINT	
27	MOULDED RESIN	
34	PLASTISOL	
35	POLYEHTLENE	

Distribution Drawing Legend Page Appears Following Illustration Section

Codes 821, 824

SDL-414 1962 DART SD1-L, SD2-L 4 DOOR SEDAN
IMITATION LEATHER COMBINATION

MyMopar.com

1962 LANCER AND DART - S SERIES

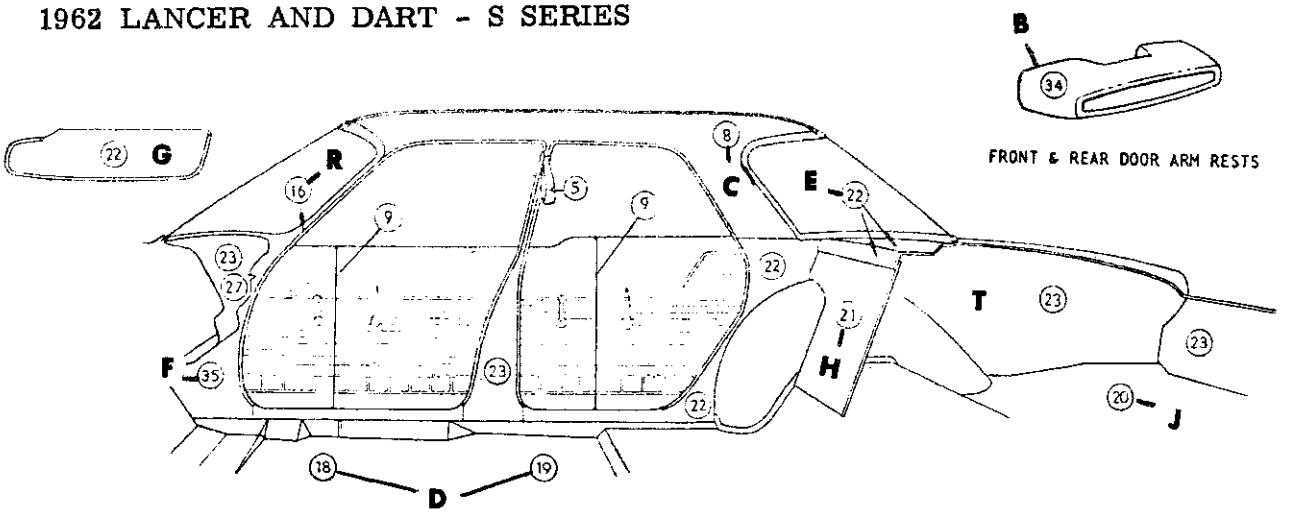

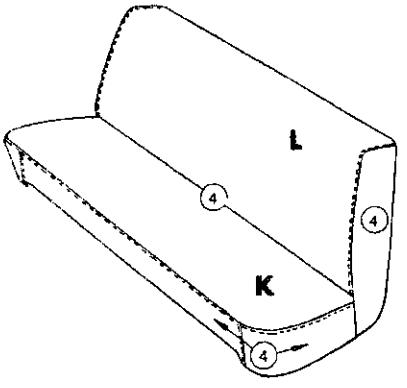

FRONT SEAT

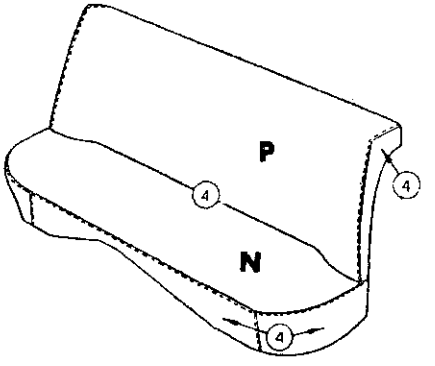

REAR SEAT

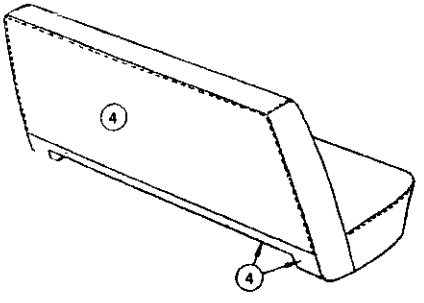

FRONT SEAT (BACK)

DISTRIBUTION OF MATERIAL

4	IMITATION LEATHER	37-CX-22
5	IMITATION LEATHER	19-C-22
8	IMITATION LEATHER	12-Y-71
9	IMITATION LEATHER	19-DJ-22
16	LACE	
18	FLOOR COVERING-FRONT-RUBBER	
19	FLOOR COVERING-REAR-RUBBER	
20	FLOOR COVERING-LUGG. COMPT. RUBBER	
21	CARDBOARD	
22	EMBOSSED CARDBOARD	
23	PAINT	
27	MOULDED RESIN	
34	PLASTISOL	
35	POLYETHLENE	

Distribution Drawing Legend Page Appears Following Illustration Section

Code 894

SDL-414A 1962 DART SD1-L, SD2-L, SD1-M, SD2-M
4 DOOR SEDAN
IMITATION LEATHER

MyMopar.com

1962 LANCER AND DART - S SERIES

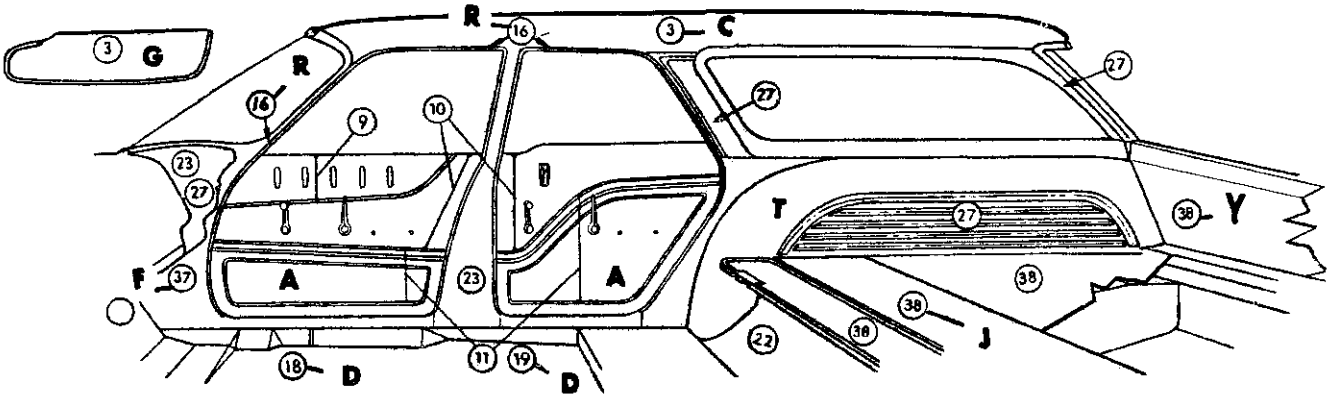

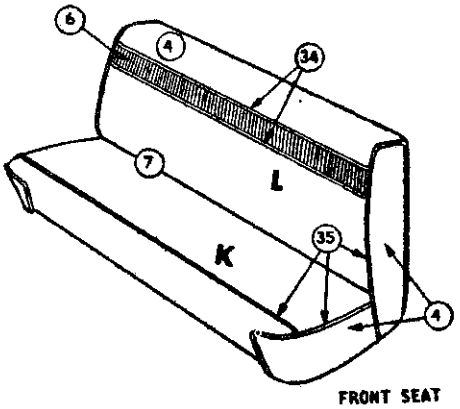

FRONT SEAT

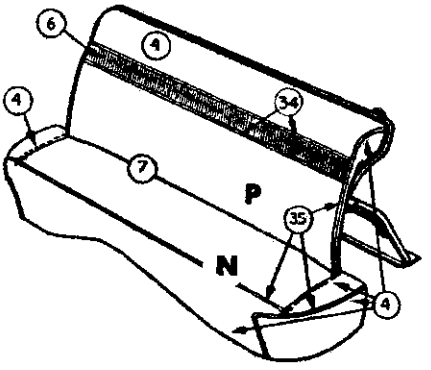

2ND SEAT

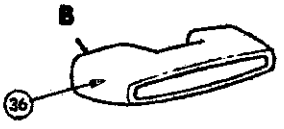

FRONT & REAR DOOR ARMREST

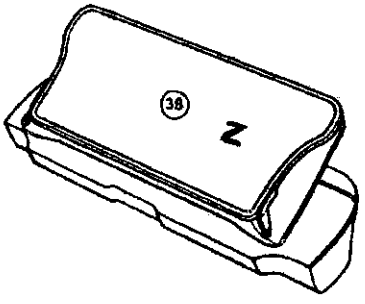

2ND SEAT (BACK)

DISTRIBUTION OF MATERIAL

3	HEADLINING - HARDBOARD	
4	IMITATION LEATHER	28-AM-22
6	IMITATION LEATHER	32-DD-66
7	IMITATION LEATHER	32-DC-64
9	IMITATION LEATHER	21-CM-22
10	IMITATION LEATHER	19-DJ-22
11	IMITATION LEATHER	21-BE-22
16	LACE	
18	FLOOR COVERING-FRONT-RUBBER	
19	FLOOR COVERING-REAR-RUBBER	
20	FLOOR COVERING-LUGG. COMPT.	
22	EMBOSSED CARDBOARD	
23	PAINT	
27	MOULDED RESIN	
34	EXTRUDED VINYL NO. 1	
35	EXTRUDED VINYL NO. 2	
36	PLASTISOL	
37	POLYETHLENE	
38	VINOLEUM	

Distribution Drawing Legend Page Appears Following Illustration Section

Codes 801, 803, 804

SDL-454 1962 DART SD1-L, SD2-L 4 DOOR STATION WAGON IMITATION LEATHER COMBINATION

MyMopar.com

1962 LANCER AND DART - S SERIES

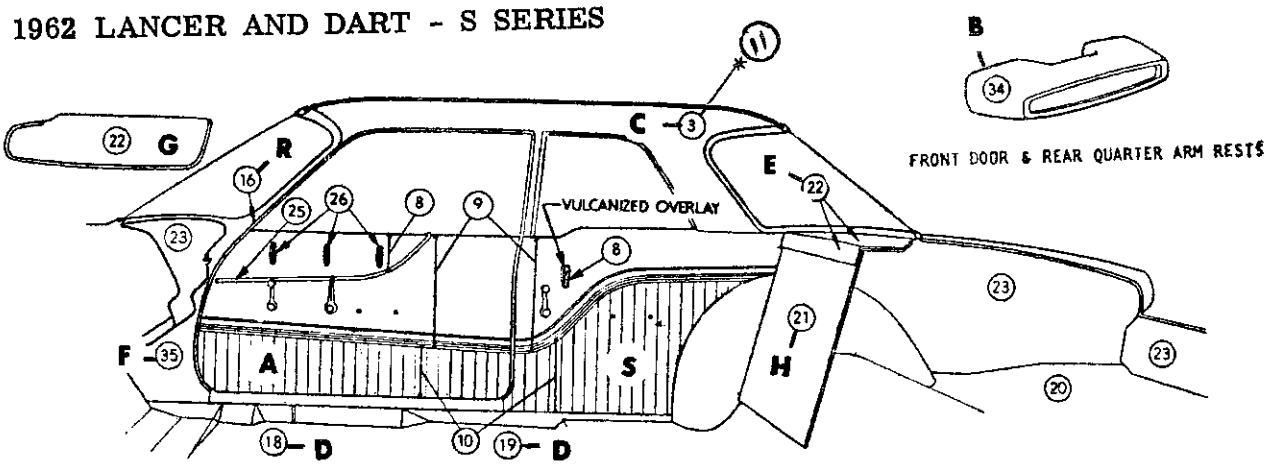

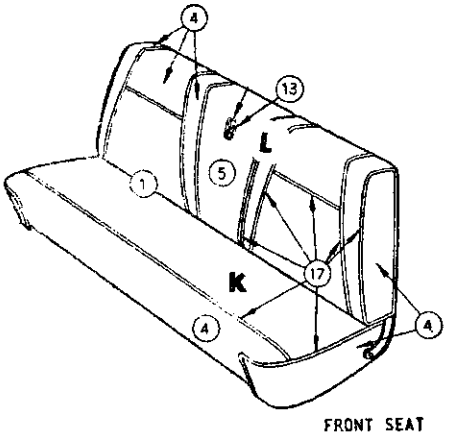

FRONT SEAT

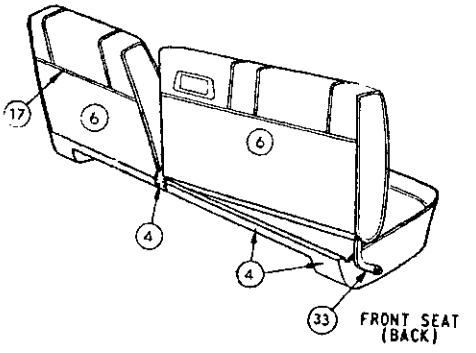

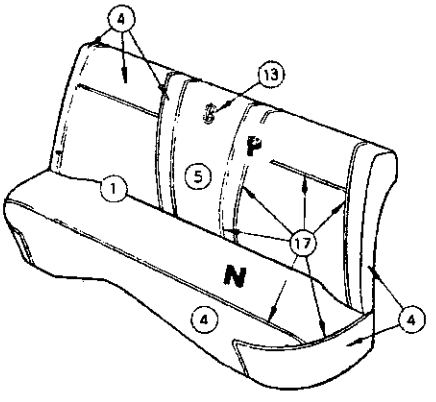

REAR SEAT

DISTRIBUTION OF MATERIAL

1	BODY CLOTH 1	
*3	HEADLINING	
4	IMITATION LEATHER	28-AM-22
5	IMITATION LEATHER	28A-AM-22
6	IMITATION LEATHER	19-C-22
8	IMITATION LEATHER	21-CM-22
9	IMITATION LEATHER	19-DJ-22
*10	IMITATION LEATHER	.012-L-22
11	IMITATION LEATHER	12-Y-71
13	IMITATION LEATHER	.017-L-22
16	LACE	
17	EXTRUDED VINYL	
18	FLOOR COVERING-FRONT-CARPET	
19	FLOOR COVERING-REAR-CARPET	
20	FLOOR COVERING-LUGG. COMPT. RUBBER	
21	CARDBOARD	
22	EMBOSSED CARDBOARD	
23	PAINT	
25	MOULDING	
26	MYLAR	
33	PLASTIC	
34	PLASTISOL	
35	POLYETHLENE	
*	CLOTH TO USE VINYL	

Distribution Drawing Legend Page Appears Following Illustration Section

Codes 711, 712, 713, 714

SDM-211 1962 DART SD1-M, SD2-M 2 DOOR SEDAN
CLOTH AND IMITATION LEATHER COMBINATION

MyMopar.com

1962 LANCER AND DART - S SERIES

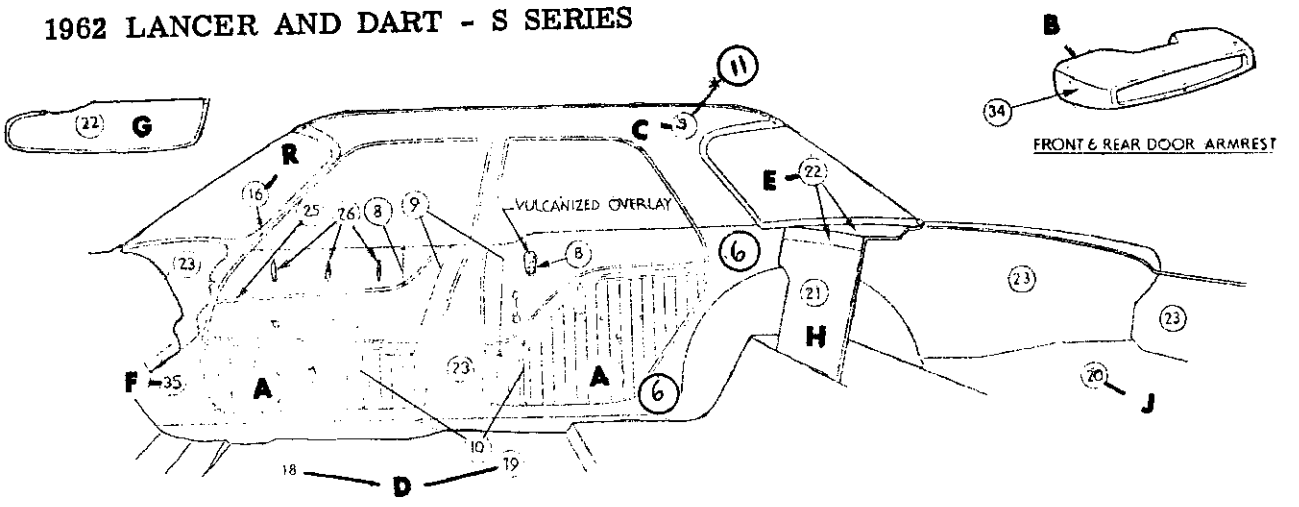

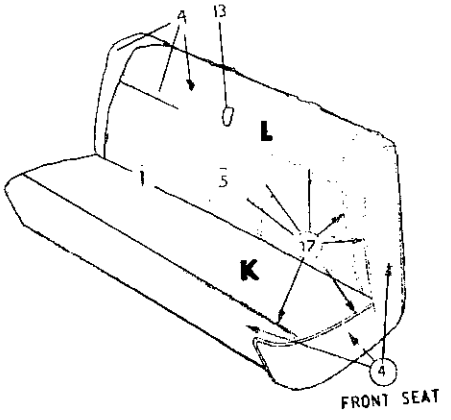

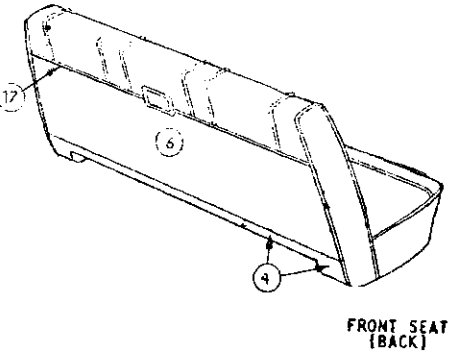

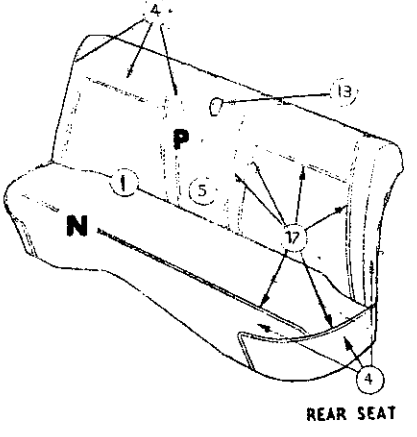

DISTRIBUTION OF MATERIAL

1	BODY CLOTH 1	
3	HEADLINING	
4	IMITATION LEATHER	28-AM-22
5	IMITATION LEATHER	28A-AM-22
6	IMITATION LEATHER	19-C-22
8	IMITATION LEATHER	21-CM-22
9	IMITATION LEATHER	19-DJ-22
10	IMITATION LEATHER	.012-L-22
11	IMITATION LEATHER	12-Y-71
13	IMITATION LEATHER	.017-L-22
16	LACE	
17	EXTRUDED VINYL	
18	FLOOR COVERING-FRONT-CARPET	
19	FLOOR COVERING-REAR-CARPET	
20	FLOOR COVERING-LUGG. COMPT. RUBBER	
21	CARDBOARD	
22	EMBOSSED CARDBOARD	
23	PAINT	
24	METAL	
25	MOULDING	
26	MYLAR	
34	PLASTISOL	
35	POLYETHLENE	
*	CLOTH TO USE VINYL	

Distribution Drawing Legend Page Appears Following Illustration Section

Codes 711, 712, 713, 714, 715

SDM-411 1962 DART SD1-M, SD2-M 4 DOOR SEDAN
CLOTH AND IMITATION LEATHER COMBINATION

MyMopar.com

1962 LANCER AND DART - S SERIES

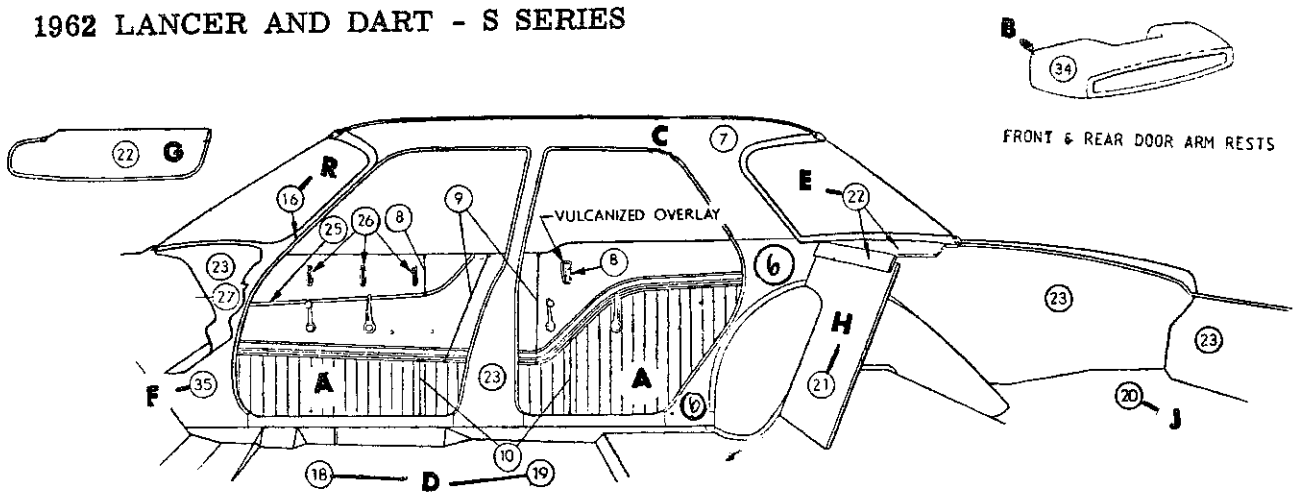

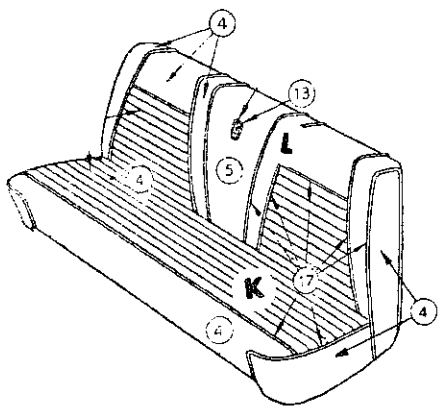

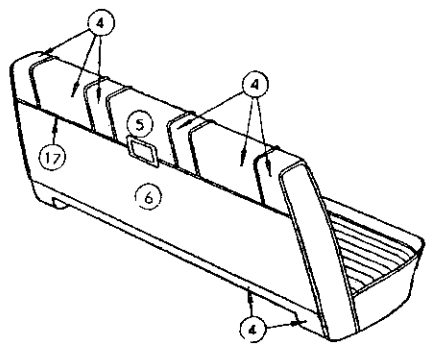

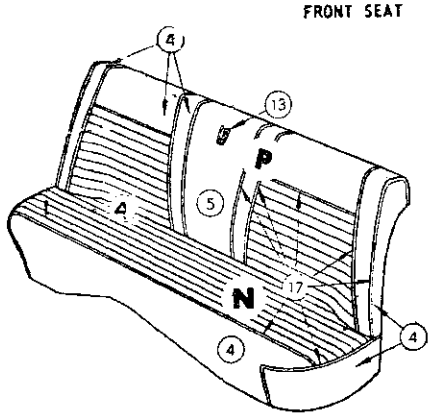

DISTRIBUTION OF MATERIAL

4	IMITATION LEATHER	28-AM-22
5	IMITATION LEATHER	28A-AM-22
6	IMITATION LEATHER	19-C-22
7	IMITATION LEATHER	18-T-16
8	IMITATION LEATHER	21-CM-22
9	IMITATION LEATHER	19-DJ-22
13	IMITATION LEATHER	.017-L-22
16	LACE	
17	EXTRUDED VINYL	
18	FLOOR COVERING-FRONT-CARPET	
19	FLOOR COVERING-REAR-CARPET	
20	FLOOR COVERING-LUGG. COMPT. RUBBER	
21	CARDBOARD	
22	EMBOSSED CARDBOARD	
23	PAINT	
25	MOULDING	
26	MYLAR	
27	MOULDED RESIN	
34	PLASTISOL	
35	POLYETHLENE	

Distribution Drawing Legend Page Appears Following Illustration Section

Codes 831, 834

SDM-414 1962 DART SD1-M, SD2-M 4 DOOR SEDAN
IMITATION LEATHER COMBINATION

MyMopar.com

1962 LANCER AND DART - S SERIES

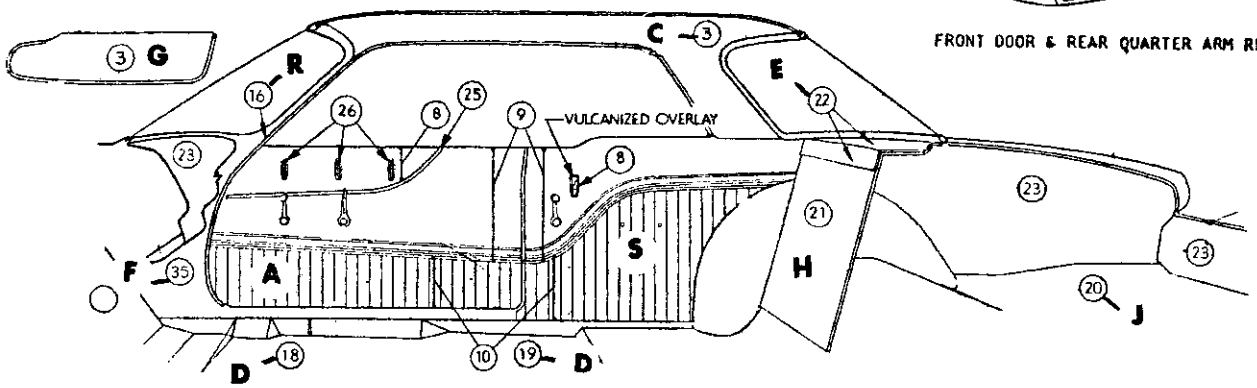

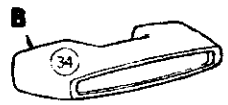

FRONT DOOR & REAR QUARTER ARM RESTS

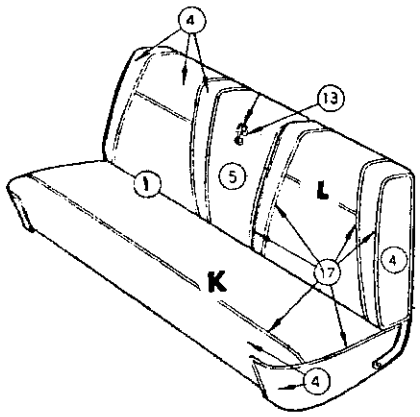

FRONT SEAT

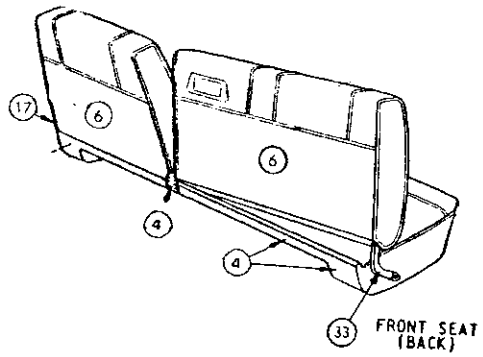

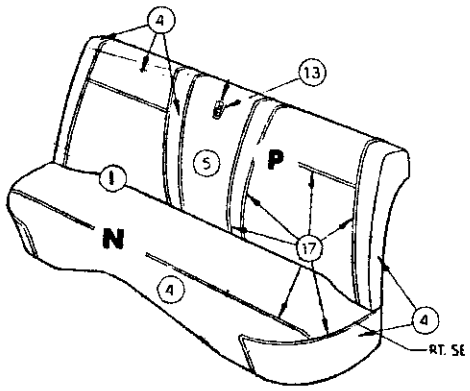

REAR SEAT

DISTRIBUTION OF MATERIAL

1	BODY CLOTH	1
3	HEADLINING-HARDBOARD	
4	IMITATION LEATHER	28-AM-22
5	IMITATION LEATHER	28A-AM-22
6	IMITATION LEATHER	19-C-22
8	IMITATION LEATHER	21-CM-22
9	IMITATION LEATHER	19-DJ-22
10	IMITATION LEATHER	12-L-22
13	IMITATION LEATHER	.017-L-22
16	LACE	
17	EXTRUDED VINYL	
18	FLOOR COVERING-FRONT-CARPET	
19	FLOOR COVERING-REAR-CARPET	
20	FLOOR COVERING-LUGG. COMP. -RUBBER	
21	CARDBOARD	
22	EMBOSSED CARDBOARD	
23	PAINT	
25	MOULDING	
26	MYLAR	
33	PLASTIC	
34	PLASTISOL	
35	POLYETHLENE	

Distribution Drawing Legend Page Appears Following Illustration Section

Codes 711, 713, 714, 715

SDM-231 1962 DART SD1-M, SD2-M 2 DOOR HARD TOP
CLOTH AND IMITATION LEATHER COMBINATION

MyMopar.com

1962 LANCER AND DART - S SERIES

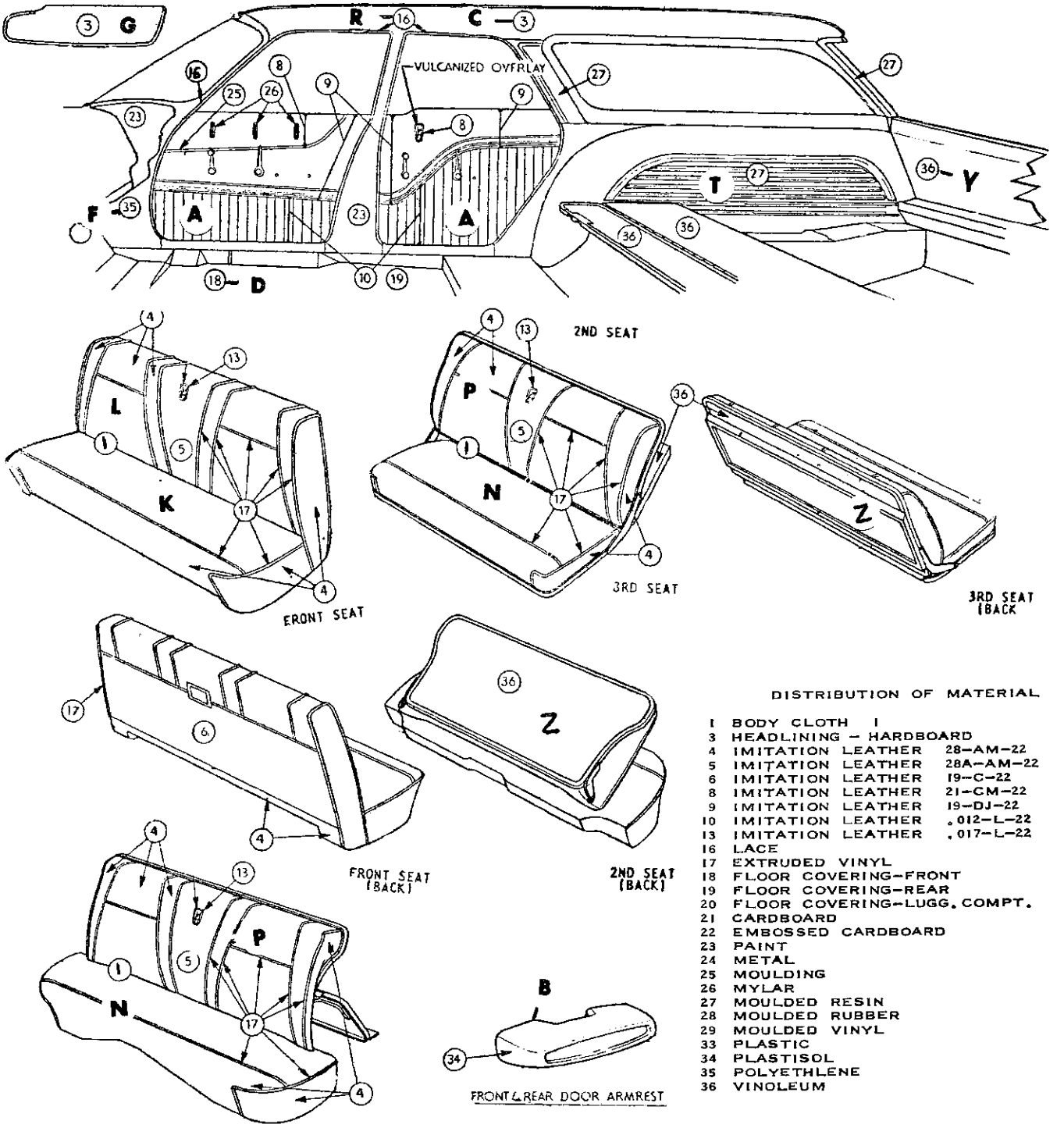

DISTRIBUTION OF MATERIAL

1	BODY CLOTH 1	
3	HEADLINING - HARDBOARD	
4	IMITATION LEATHER	28-AM-22
5	IMITATION LEATHER	28A-AM-22
6	IMITATION LEATHER	19-C-22
8	IMITATION LEATHER	21-CM-22
9	IMITATION LEATHER	19-DJ-22
10	IMITATION LEATHER	.012-L-22
13	IMITATION LEATHER	.017-L-22
16	LACE	
17	EXTRUDED VINYL	
18	FLOOR COVERING-FRONT	
19	FLOOR COVERING-REAR	
20	FLOOR COVERING-LUGG. COMPT.	
21	CARDBOARD	
22	EMBOSSED CARDBOARD	
23	PAINT	
24	METAL	
25	MOULDING	
26	MYLAR	
27	MOULDED RESIN	
28	MOULDED RUBBER	
29	MOULDED VINYL	
33	PLASTIC	
34	PLASTISOL	
35	POLYETHLENE	
36	VINOLEUM	

Distribution Drawing Legend Page Appears Following Illustration Section

Codes 711, 713, 714, 715

SDM-451 1962 DART SD1-M, SD2-M 4 DOOR STATION WAGON
CLOTH AND IMITATION LEATHER COMBINATION

MyMopar.com

1962 LANCER AND DART - S SERIES

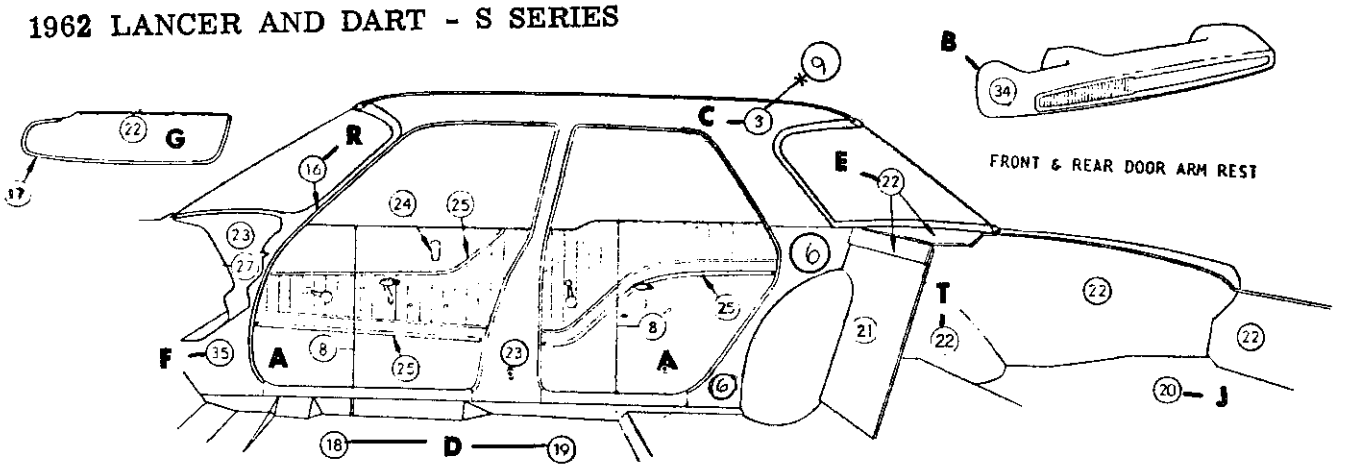

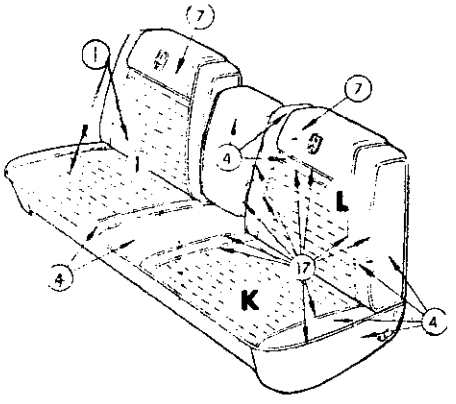

FRONT SEAT

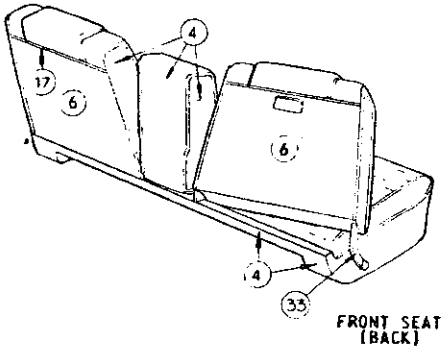

FRONT SEAT (BACK)

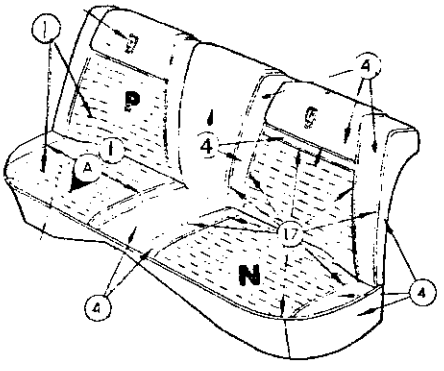

REAR SEAT

DISTRIBUTION OF MATERIAL

1	BODY CLOTH	I
*3	HEADLINING	
4	IMITATION LEATHER	28-AM-22
6	IMITATION LEATHER	19-C-22
7	IMITATION LEATHER	28-A-22
8	IMITATION LEATHER	21-CM-22
*9	IMITATION LEATHER	12-Y-71
16	LACE	
17	EXTRUDED VINYL	
18	FLOOR COVERING-FRONT-CARPET	
19	FLOOR COVERING-REAR-CARPET	
20	FLOOR COVERING-LUGG. COMPT. RUBBER	
21	CARDBOARD	
22	EMBOSSED CARDBOARD	
23	PAINT	
24	METAL	
25	MOULDING	
27	MOULDED RESIN	
33	PLASTIC	
34	PLASTISOL	
35	POLYETHLENE	
*	CLOTH TO USE VINYL	

Distribution Drawing Legend Page Appears Following Illustration Section

Codes 721, 722, 723, 724, 725

SDH-411 1962 DART SD1-H, SD2-H 4 DOOR SEDAN
CLOTH AND IMITATION LEATHER COMBINATION

MyMopar.com

1962 LANCER AND DART - S SERIES

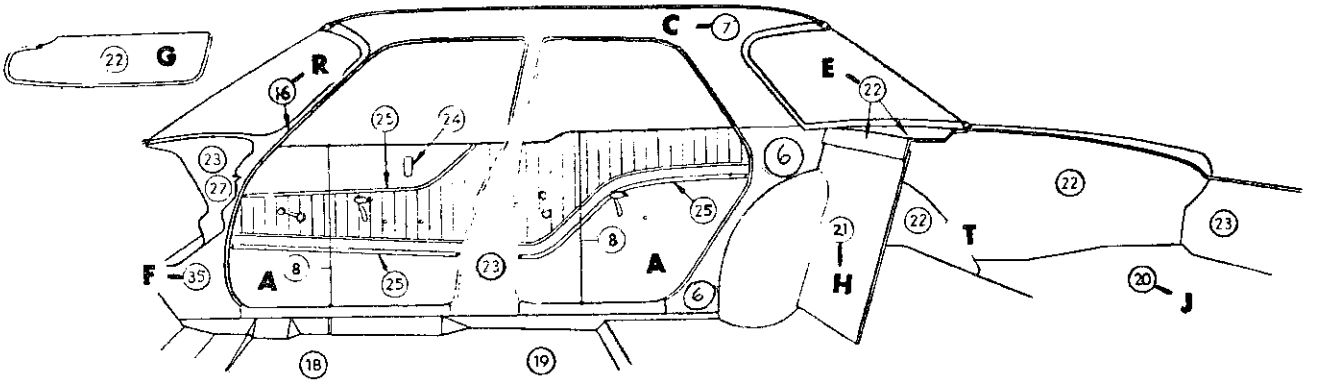

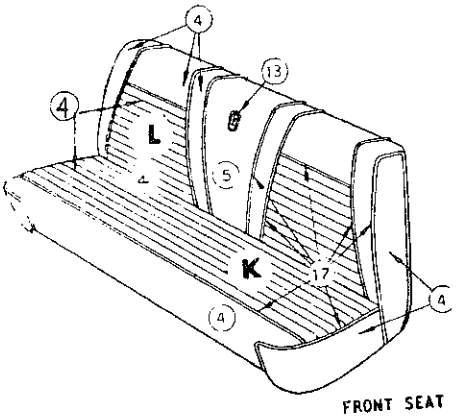

FRONT SEAT

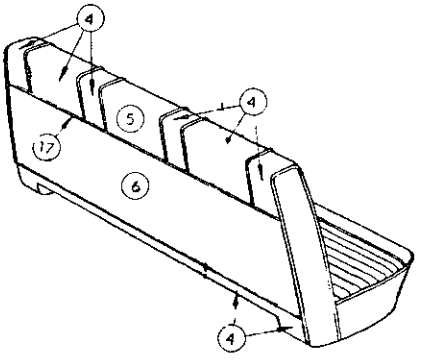

FRONT SEAT (BACK)

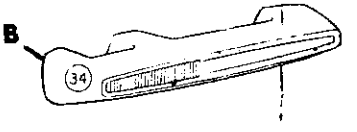

FRONT & REAR DOOR ARM REST

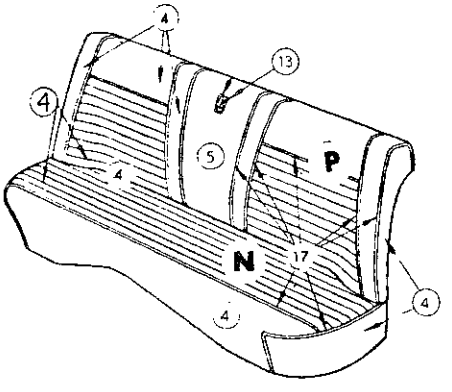

REAR SEAT

DISTRIBUTION OF MATERIAL

4	IMITATION LEATHER	28-AM-22
5	IMITATION LEATHER	28A-AM-22
6	IMITATION LEATHER	19-C-22
7	IMITATION LEATHER	18-T-16
8	IMITATION LEATHER	19-DJ-22
13	IMITATION LEATHER	.017-L-22
16	LACE	
17	EXTRUDED VINYL	
18	FLOOR COVERING-FRONT-CARPET	
19	FLOOR COVERING-REAR-CARPET	
20	FLOOR COVERING-LUGG. COMPT. RUBBER	
21	CARDBOARD	
22	EMBOSSED CARDBOARD	
23	PAINT	
24	METAL	
25	MOULDING	
27	MOULDED RESIN	
34	PLASTISOL	
35	POLYETHLENE	

Distribution Drawing Legend Page Appears Following Illustration Section.

Codes 841, 844

SDH-414 1962 DART SD1-H, SD2-H 4 DOOR SEDAN
IMITATION LEATHER COMBINATION

MyMopar.com

1962 LANCER AND DART - S SERIES

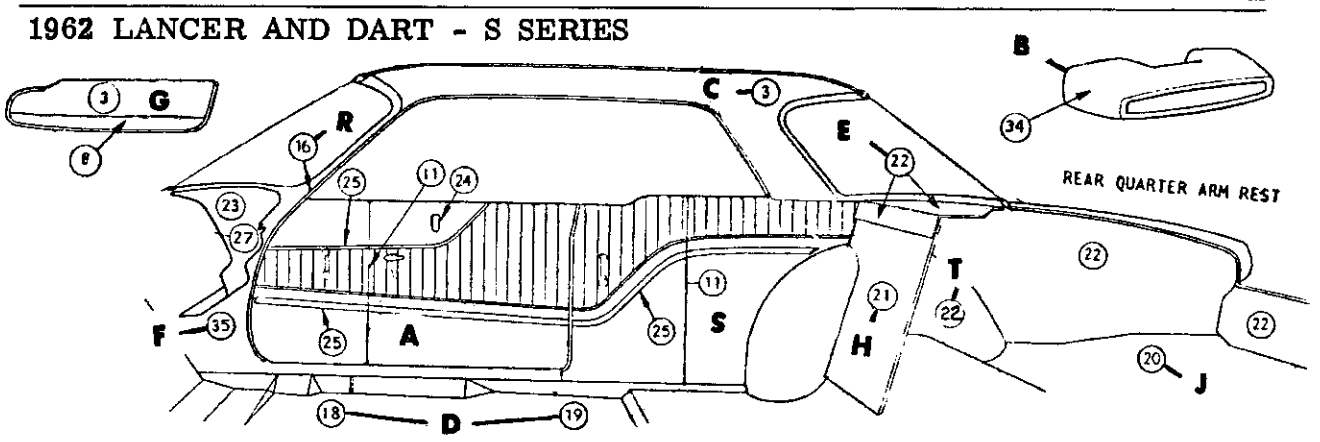

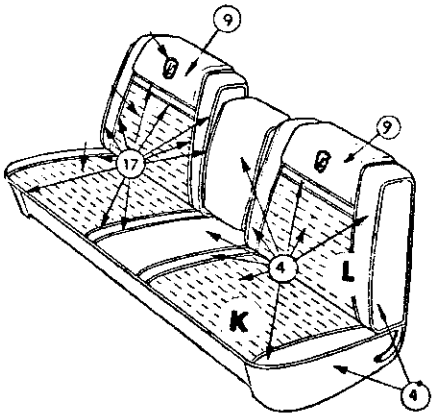

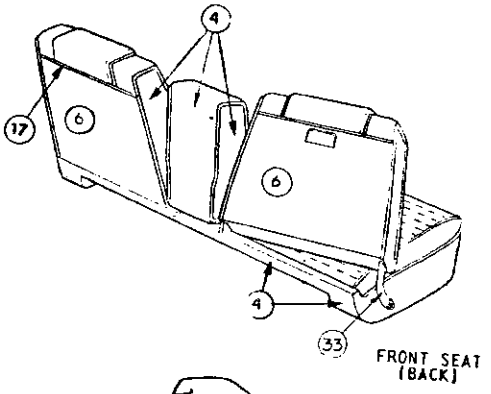

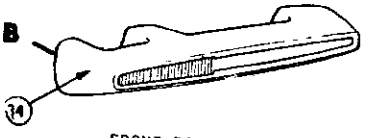

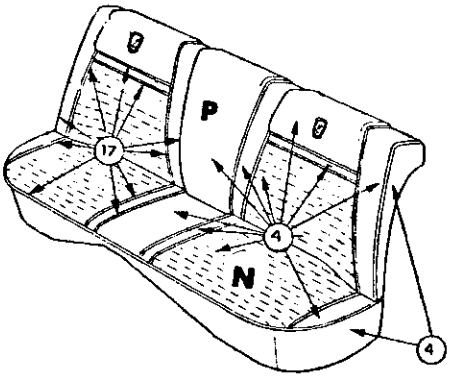

DISTRIBUTION OF MATERIAL

3	HEADLINING – POLYURETHANE	
4	IMITATION LEATHER	28–AM–22
6	IMITATION LEATHER	19–C–22
8	IMITATION LEATHER	19A–C–22
9	IMITATION LEATHER	30–A–22
11	IMITATION LEATHER	19–DJ–22
16	LACE	
17	EXTRUDED VINYL	
18	FLOOR COVERING–FRONT–CARPET	
19	FLOOR COVERING–REAR–CARPET	
20	FLOOR COVERING–LUGG. COMPT. RUBBER	
21	CARDBOARD	
22	EMBOSSED CARDBOARD	
23	PAINT	
24	METAL	
25	MOULDING	
27	MOULDED RESIN	
33	PLASTIC	
34	PLASTISOL	
35	POLYETHLENE	

Distribution Drawing Legend Page Appears Following Illustration Section

Codes 811, 812, 813, 814, 815

SDH-234 1962 DART SD1-H, SD2-H 2 DOOR HARD TOP
IMITATION LEATHER TRIM

MyMopar.com

1962 LANCER AND DART - S SERIES

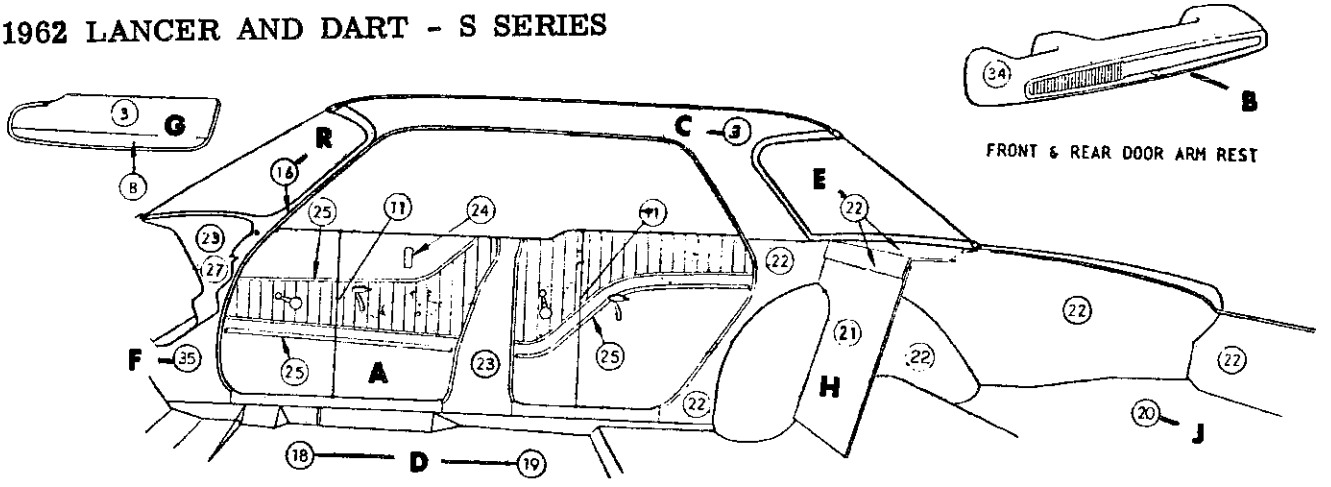

FRONT & REAR DOOR ARM REST

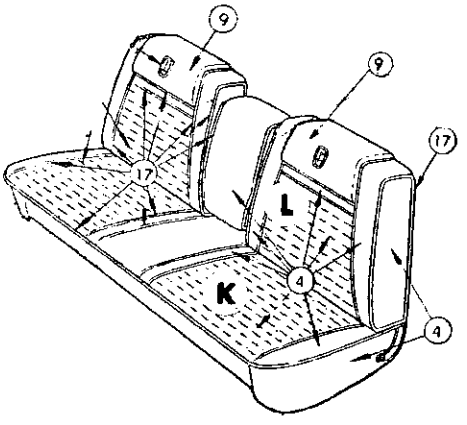

FRONT SEAT

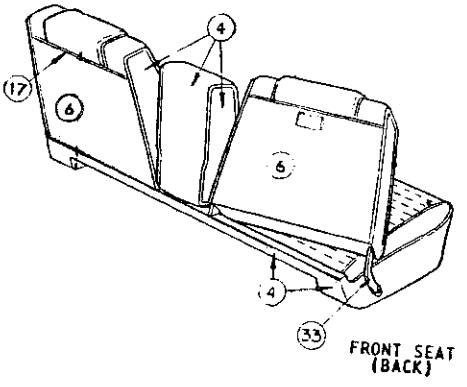

FRONT SEAT (BACK)

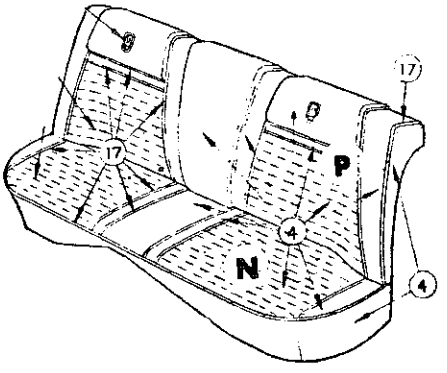

REAR SEAT

DISTRIBUTION OF MATERIAL

3	HEADLINING – POLYURETHANE	
4	IMITATION LEATHER	28–AM–22
6	IMITATION LEATHER	19–C–22
8	IMITATION LEATHER	19A–C–22
9	IMITATION LEATHER	30–A–22
11	IMITATION LEATHER	19–DJ–22
16	LACE	
17	EXTRUDED VINYL	
18	FLOOR COVERING–FRONT–CARPET	
19	FLOOR COVERING–REAR–CARPET	
20	FLOOR COVERING–LUGG. COMPT. RUBBER	
21	CARDBOARD	
22	EMBOSSED CARDBOARD	
23	PAINT	
24	METAL	
25	MOULDING	
27	MOULDED RESIN	
33	PLASTIC	
34	PLASTISOL	
35	POLYETHLENE	

Distribution Drawing Legend Page Appears Following Illustration Section

Codes 811, 812, 813, 814, 815

SDH-434 1962 DART SD1-H, SD2-H 4 DOOR HARD TOP
IMITATION LEATHER TRIM

MyMopar.com

1962 LANCER AND DART - S SERIES

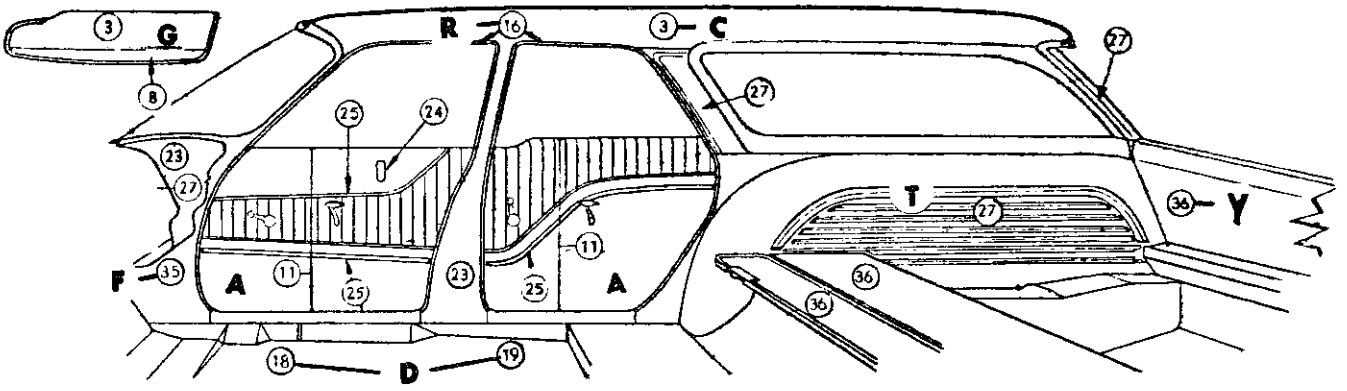

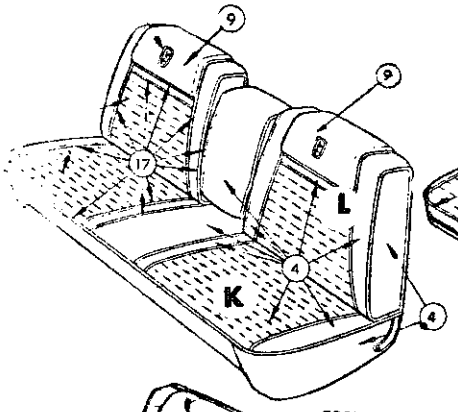

FRONT SEAT

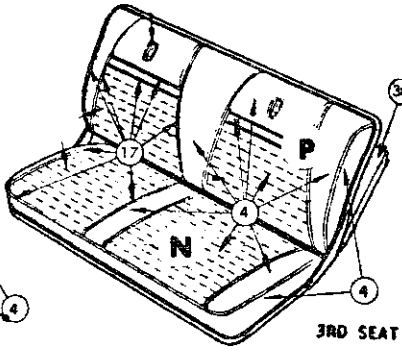

3RD SEAT

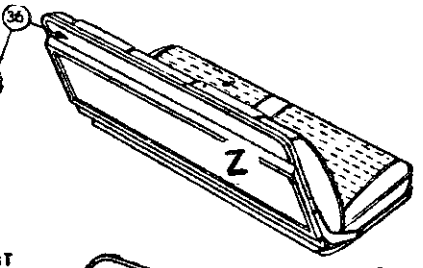

3RD SEAT (BACK)

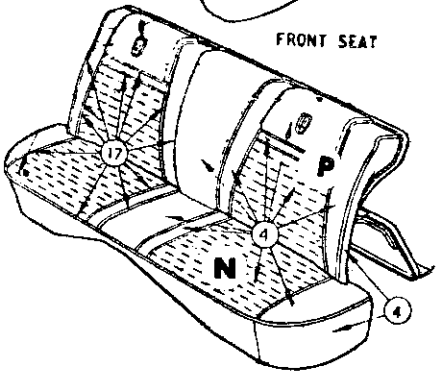

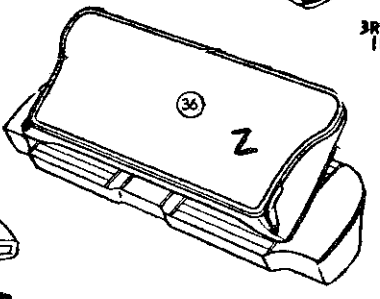

2ND SEAT (BACK)

FRONT & REAR DOOR ARM REST

2ND SEAT

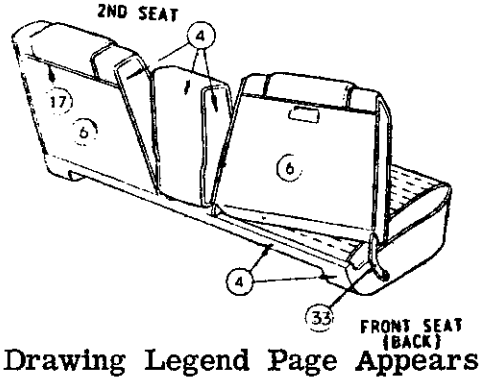

FRONT SEAT (BACK)

DISTRIBUTION OF MATERIAL

3	HEADLINING – POLYURETHANE	
4	IMITATION LEATHER	28–AM–22
6	IMITATION LEATHER	19–C–22
8	IMITATION LEATHER	19A–C–22
9	IMITATION LEATHER	30–A–22
11	IMITATION LEATHER	19–DJ–22
16	LACE	
17	EXTRUDED VINYL	
18	FLOOR COVERING–FRONT–CARPET	
19	FLOOR COVERING–REAR–CARPET	
20	FLOOR COVERING–LUGG. COMPT. RUBBER	
23	PAINT	
24	METAL	
25	MOULDING	
27	MOULDED RESIN	
28	MOULDED RUBBER	
33	PLASTIC	
34	PLASTISOL	
36	VINOLEUM	

Distribution Drawing Legend Page Appears Following Illustration Section

Codes 811, 812, 813, 814, 815

SDH-454 1962 DART SD2-H 4 DOOR STATION WAGON
IMITATION LEATHER TRIM

MyMopar.com

1962 LANCER AND DART - S SERIES

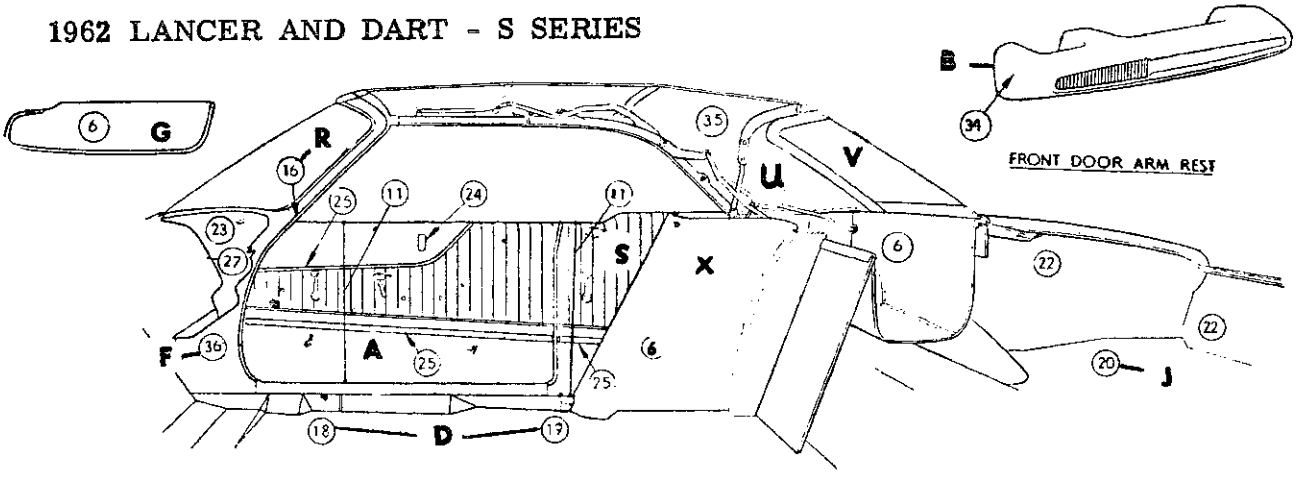

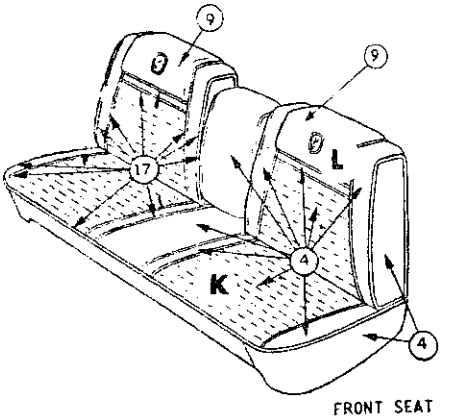

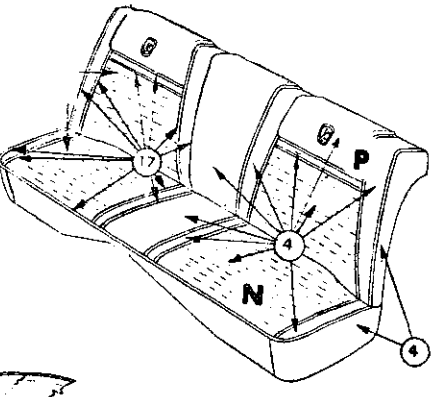

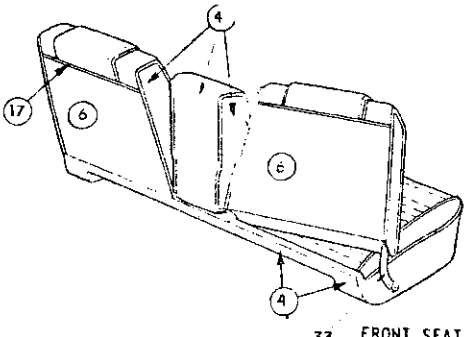

33 FRONT SEAT (BACK)

DISTRIBUTION OF MATERIAL

4	IMITATION LEATHER	28-AM-22
6	IMITATION LEATHER	19-C-22
7	IMITATION LEATHER	19A-C-22
9	IMITATION LEATHER	30-A-22
11	IMITATION LEATHER	19-DJ-22
16	LACE	
17	EXTRUDED VINYL	
18	FLOOR COVERING-FRONT-CARPET	
19	FLOOR COVERING-REAR-CARPET	
20	FLOOR COVERING-LUGG. COMPT. RUBBER	
22	EMBOSSED CARDBOARD	
23	PAINT	
25	MOULDING	
26	MYLAR	
27	MOULDED RESIN	
33	PLASTIC	
34	PLASTISOL	
35	TOP MATERIAL	
36	POLYETHLENE	

Distribution Drawing Legend Page Appears Following Illustration Section

Codes 811, 812, 813, 814, 815

SDH-274 1962 DART SD2-H CONVERTIBLE COUPE
IMITATION LEATHER TRIM

MyMopar.com

1962 DODGE, LANCER AND DART - S SERIES

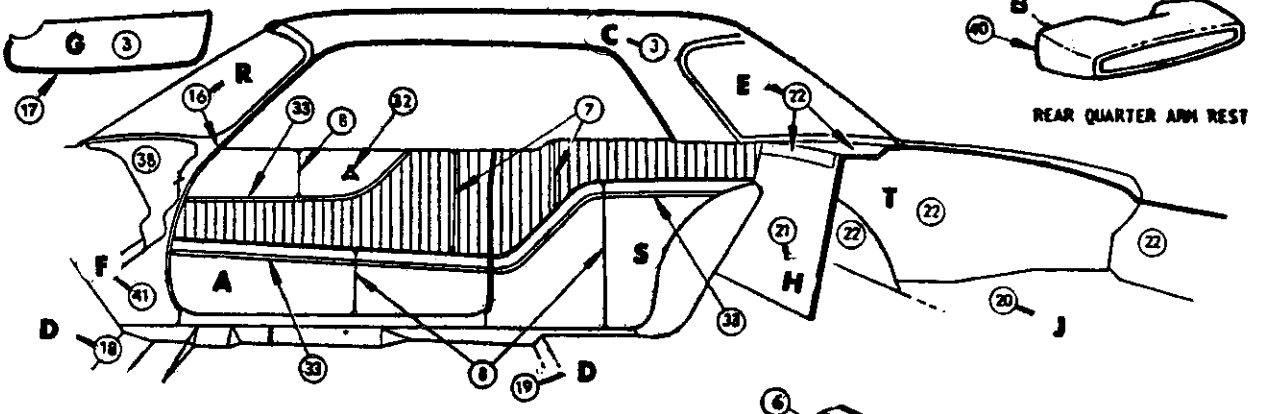

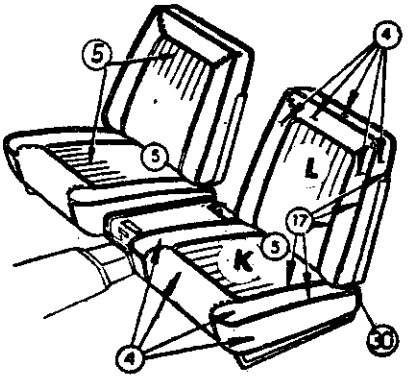

FRONT SEAT

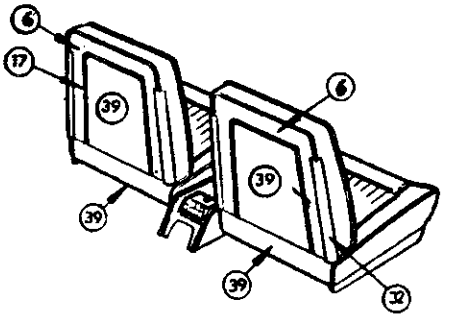

FRONT SEAT (BACK)

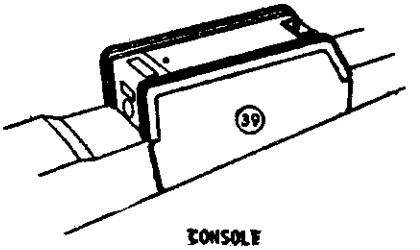

CONSOLE

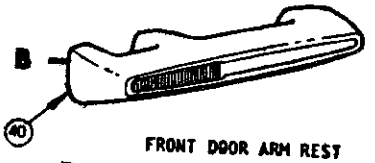

FRONT DOOR ARM REST

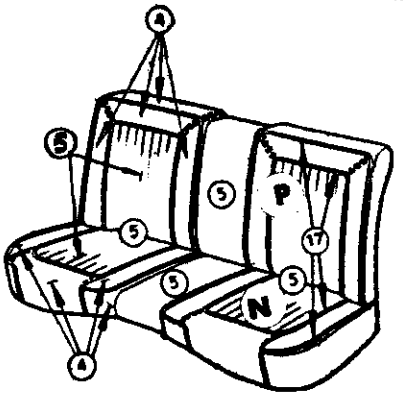

DISTRIBUTION OF MATERIAL

3	HEADLINING – POLYURETHANE	
4	IMITATION LEATHER	21A–CM–22
5	IMITATION LEATHER	28A–AM–22
6	IMITATION LEATHER	19–C–22
7	IMITATION LEATHER	19–DJ–22
8	IMITATION LEATHER	21A–CH–22
16	LACE	
17	EXTRUDED VINYL	
18	FLOOR COVERING–FRONT–CARPET	
19	FLOOR COVERING–REAR–CARPET	
20	FLOOR COVERING–LUGG. COMPT. RUBBER	
21	CARDBOARD	
22	EMBOSSED CARDBOARD ASPHALT	
30	PLASTIC	
32	METAL	
33	MOULDING	
36	MYLAR	
38	MOULDED RESIN	
39	CARPET	
40	PLASTISOL	
41	POLYETHLENE	

Distribution Drawing Legend Page Appears Following Illustration Section

Codes 851, 852, 853, 855, 856

SDP-234 1962 POLARA SD2-P SPECIAL CLUB COUPE
IMITATION LEATHER

MyMopar.com

1962 DODGE, LANCER AND DART - S SERIES

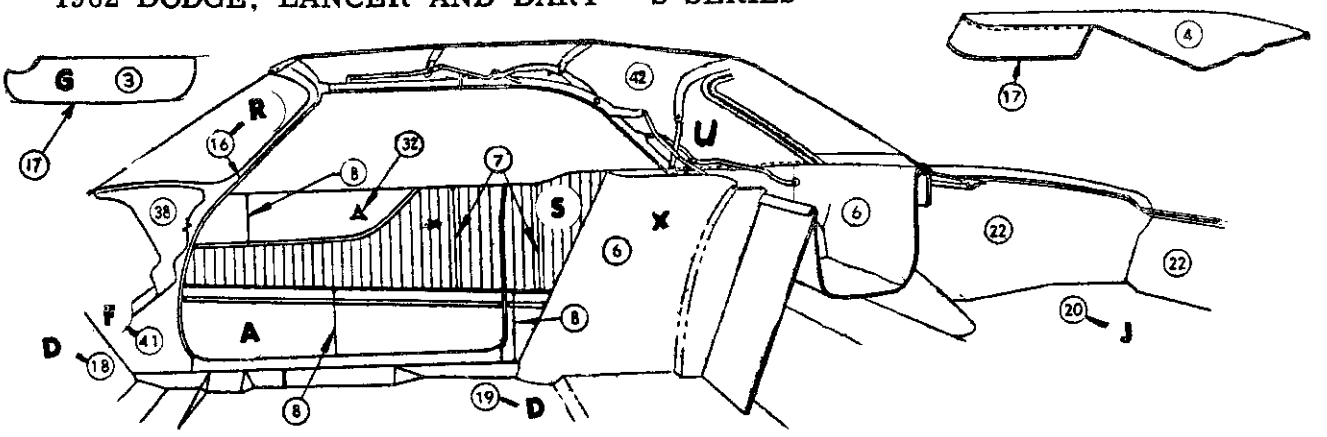

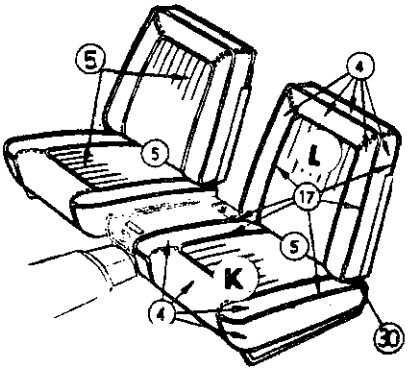

FRONT SEAT

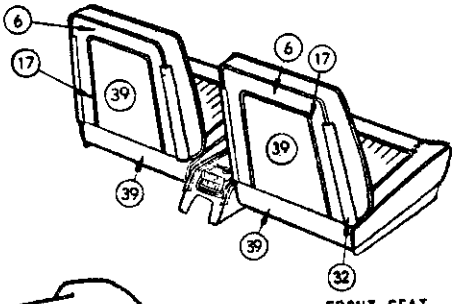

FRONT SEAT (BACK)

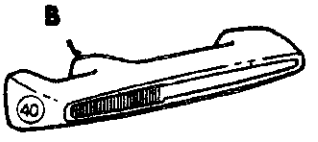

FRONT DOOR ARM REST

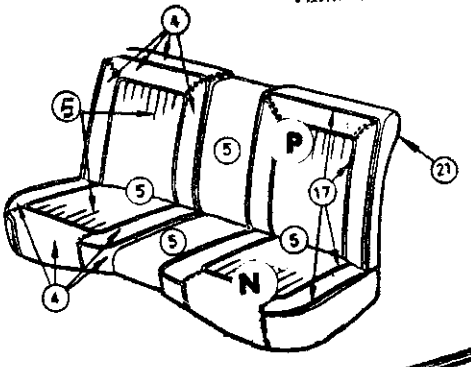

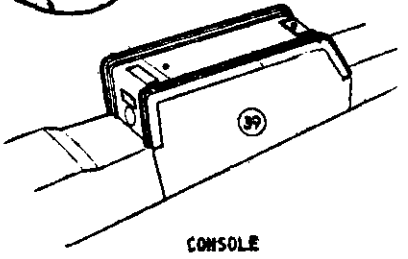

CONSOLE

DISTRIBUTION OF MATERIAL

4	IMITATION LEATHER	28-AM-22
5	IMITATION LEATHER	28A-AM-22
6	IMITATION LEATHER	19-C-22
7	IMITATION LEATHER	19-DJ-22
8	IMITATION LEATHER	21A-CM-22
16	LACE	
17	EXTRUDED VINYL	
18	FLOOR COVERING-FRONT-CARPET	
19	FLOOR COVERING-REAR-CARPET	
20	FLOOR COVERING-LUGG. COMPT. RUBBER	
21	EMBOSSED CARDBOARD	
22	EMBOSSED CARDBOARD ON ASPHALT	
30	PLASTIC	
31	PAINT	
32	METAL	
38	MOULDED RESIN	
39	CARPET	
40	PLASTISOL	
41	POLYETHLENE	
42	TOP MATERIAL	

Distribution Drawing Legend Page Appears Following Illustration Section

Codes 851, 852, 853, 855, 856

SDP-274 1962 POLARA SD2-P CONVERTIBLE COUPE
IMITATION LEATHER TRIM

MyMopar.com

1962 DODGE, LANCER AND DART - S SERIES

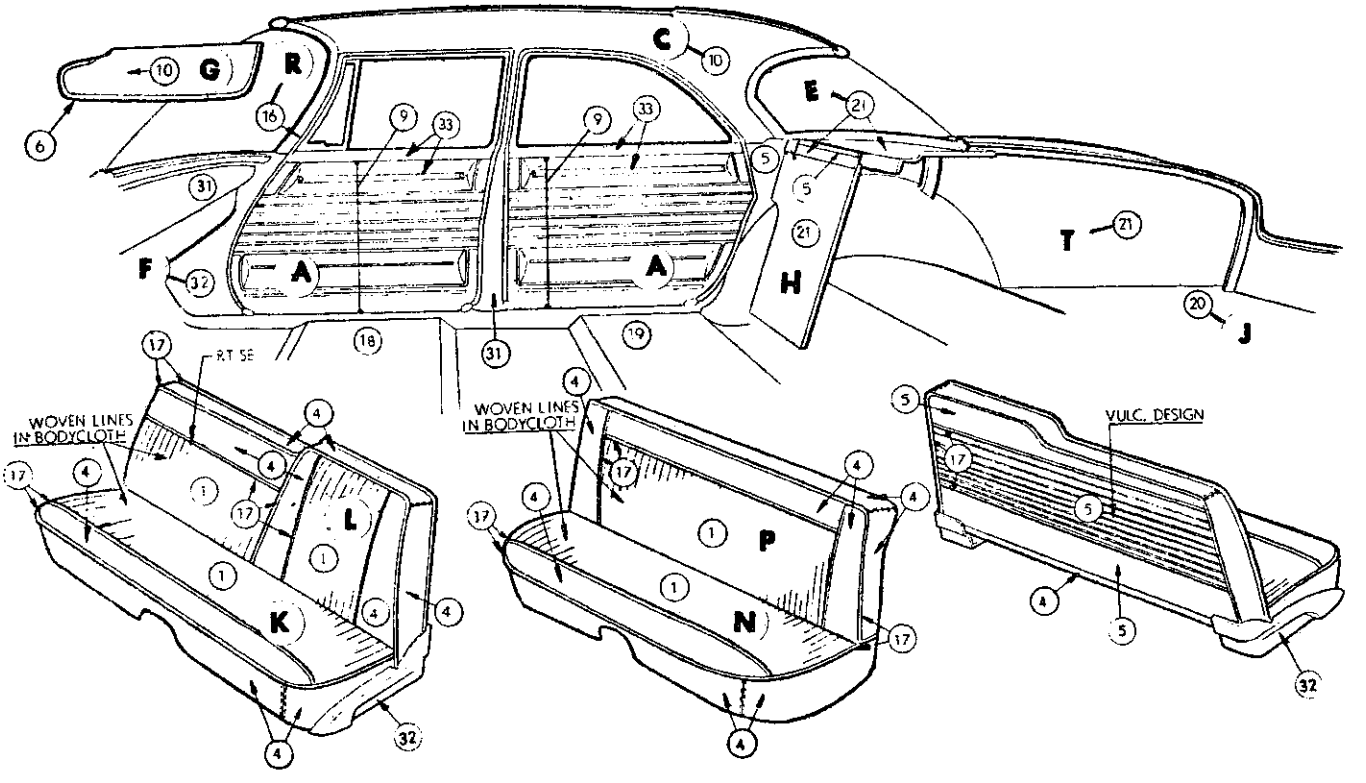

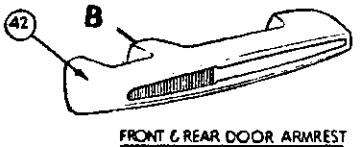

DISTRIBUTION OF MATERIAL

1	BODY CLOTH I	
4	IMITATION LEATHER	28-AM-22
5	IMITATION LEATHER	19-C-22
6	IMITATION LEATHER	19A-C-22
9	IMITATION LEATHER	.012-L-22
10	IMITATION LEATHER	12-Y-70
16	LACE	
17	EXTRUDED VINYL	
18	FLOOR COVERING-FRONT-RUBBER	
19	FLOOR COVERING-REAR-RUBBER	
20	FLOOR COVERING-LUGG. COMPT.-RUBBER	
21	EMBOSSED CARDBOARD	
30	PLASTIC	
31	PAINT	
32	METAL	
33	MOULDING	
35	POLYETHYLENE	
36	MYLAR	
38	MOULDED RESIN	
39	CARPET	
41	MOULDED VINYL	
42	PLASTISOL	

Distribution Drawing Legend Page Appears Following Illustration Section

Codes 301, 303, 304, 305

SDL-411 1962 DODGE CUSTOM 880 SD3-L 4 DOOR SEDAN
CLOTH AND IMITATION LEATHER TRIM

MyMopar.com

1962 DODGE, LANCER AND DART - S SERIES

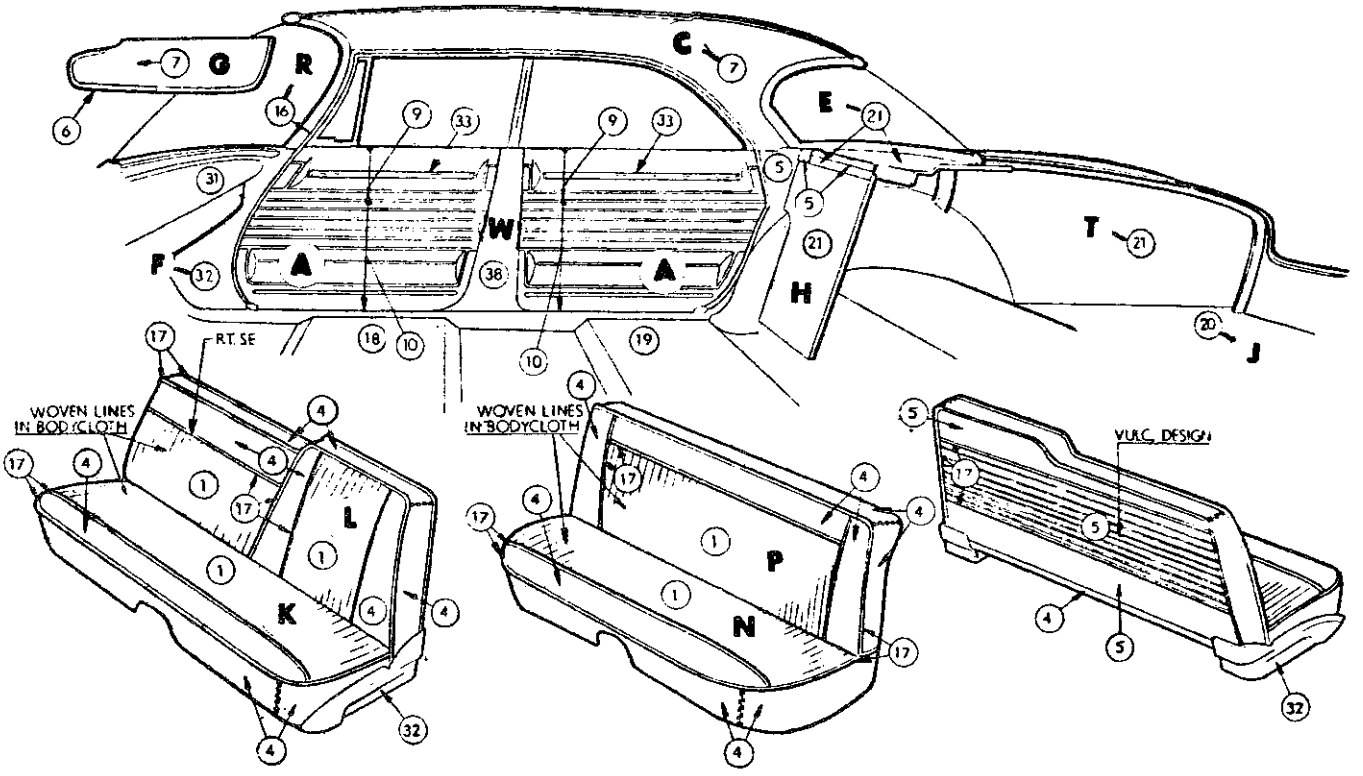

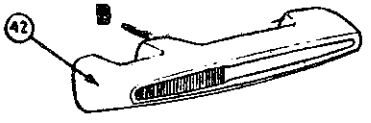

FRONT & REAR DOOR ARMREST

DISTRIBUTION OF MATERIAL

1	BODY CLOTH 1	
4	IMITATION LEATHER	28-AM-22
5	IMITATION LEATHER	19-C-22
6	IMITATION LEATHER	19A-C-22
7	IMITATION LEATHER	12-Y-70
9	IMITATION LEATHER	19-DJ-22
10	IMITATION LEATHER	.012-L-22
16	LACE	
17	EXTRUDED VINYL	
18	FLOOR COVERING-FRONT-RUBBER	
19	FLOOR COVERING-REAR-RUBBER	
20	FLOOR COVERING-LUGG. COMPT.-RUBBER	
21	EMBOSSED CARDBOARD	
30	PLASTIC	
31	PAINT	
32	METAL	
33	MOULDING	
35	POLYETHYLENE	
36	MYLAR	
38	MOULDED RESIN	
39	CARPET	
41	MOULDED VINYL	
42	PLASTISOL	

Distribution Drawing Legend Page Appears Following Illustration Section

Codes 301, 303, 304, 305

SDL-431 1962 DODGE CUSTOM 880 SD3-L SPECIAL 4 DOOR SEDAN CLOTH AND IMITATION LEATHER TRIM

MyMopar.com

1962 LANCER AND DART - S SERIES

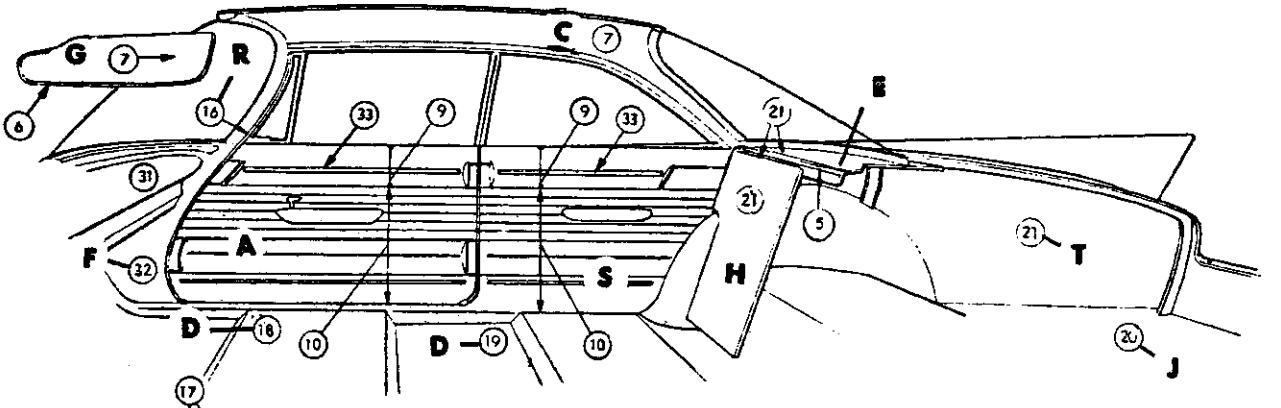

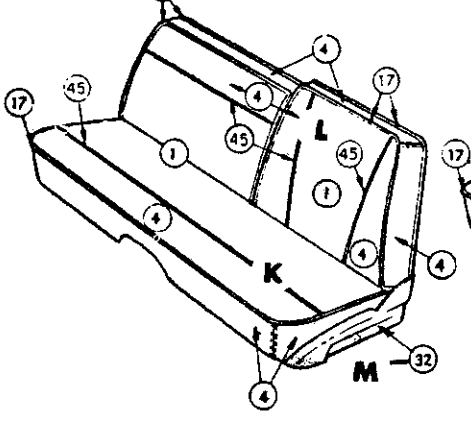

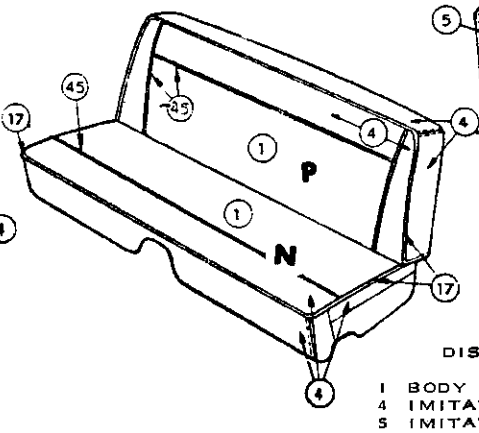

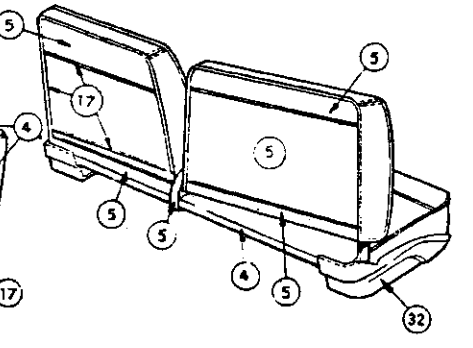

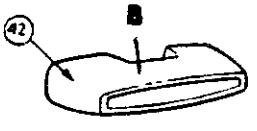

REAR QTR. ARMREST

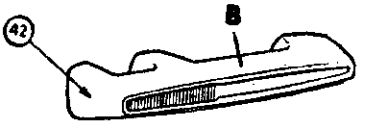

FRONT DOOR ARMREST

DISTRIBUTION OF MATERIAL

1	BODY CLOTH I	
4	IMITATION LEATHER	28-AM-22
5	IMITATION LEATHER	19-C-22
6	IMITATION LEATHER	19A-C-22
7	IMITATION LEATHER	12-Y-70
9	IMITATION LEATHER	19-DJ-22
10	IMITATION LEATHER	.012-L-22
16	LACE	
17	EXTRUDED VINYL	
18	FLOOR COVERING-FRONT-RUBBER	
19	FLOOR COVERING-REAR-RUBBER	
20	FLOOR COVERING-LUGG. COMPT. -RUBBER	
21	EMBOSSED CARDBOARD	
30	PLASTIC	
31	PAINT	
32	METAL	
33	MOULDING	
35	POLYETHYLENE	
36	MYLAR	
38	MOULDED RESIN	
39	CARPET	
41	MOULDED VINYL	
42	PLASTISOL	
45	MYLAR WELT	

Distribution Drawing Legend Page Appears Following Illustration Section

Codes 341, 343, 344, 345

SD3L-231B

1962 DODGE CUSTOM 880 SD3-L
SPECIAL CLUB COUPE
CLOTH & IMITATION LEATHER TRIM

MyMopar.com

1962 LANCER AND DART - S SERIES

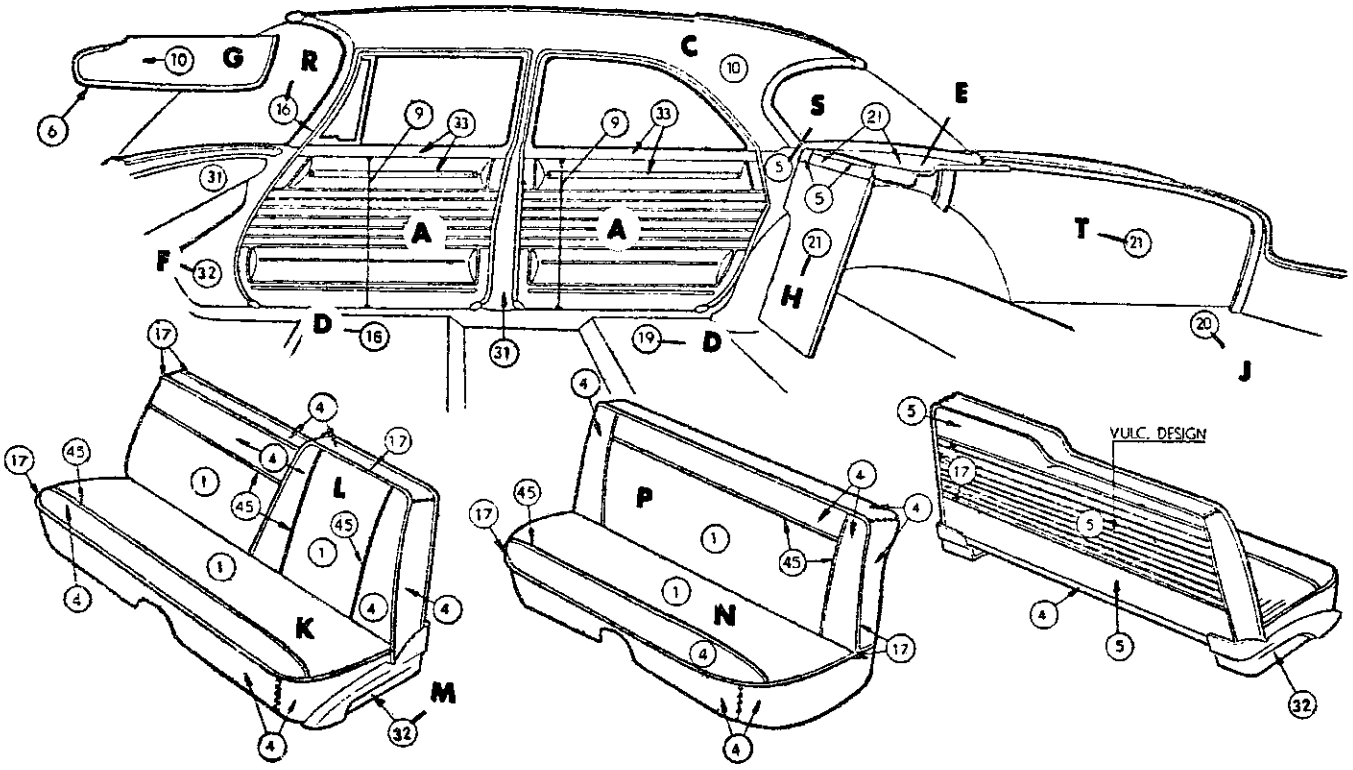

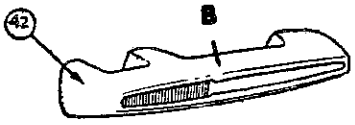

DISTRIBUTION OF MATERIAL

1	BODY CLOTH 1	
4	IMITATION LEATHER	28-AM-22
5	IMITATION LEATHER	19-C-22
6	IMITATION LEATHER	19A-C-22
9	IMITATION LEATHER	.012-L-22
10	IMITATION LEATHER	12-Y-70
16	LACE	
17	EXTRUDED VINYL	
18	FLOOR COVERING-FRONT-RUBBER	
19	FLOOR COVERING-REAR-RUBBER	
20	FLOOR COVERING-LUGG. COMPT.-RUBBER	
21	EMBOSSED CARDBOARD	
30	PLASTIC	
31	PAINT	
32	METAL	
33	MOULDING	
35	POLYETHYLENE	
36	MYLAR	
38	MOULDED RESIN	
39	CARPET	
41	MOULDED VINYL	
42	PLASTISOL	
45	MYLAR WELT	

Distribution Drawing Legend Page Appears Following Illustration Section

Codes 341, 343, 344, 345

SD3L-411B 1962 DODGE SD3-L 4 DOOR SEDAN
CLOTH & IMITATION LEATHER TRIM

MyMopar.com

1962 LANCER AND DART - S SERIES

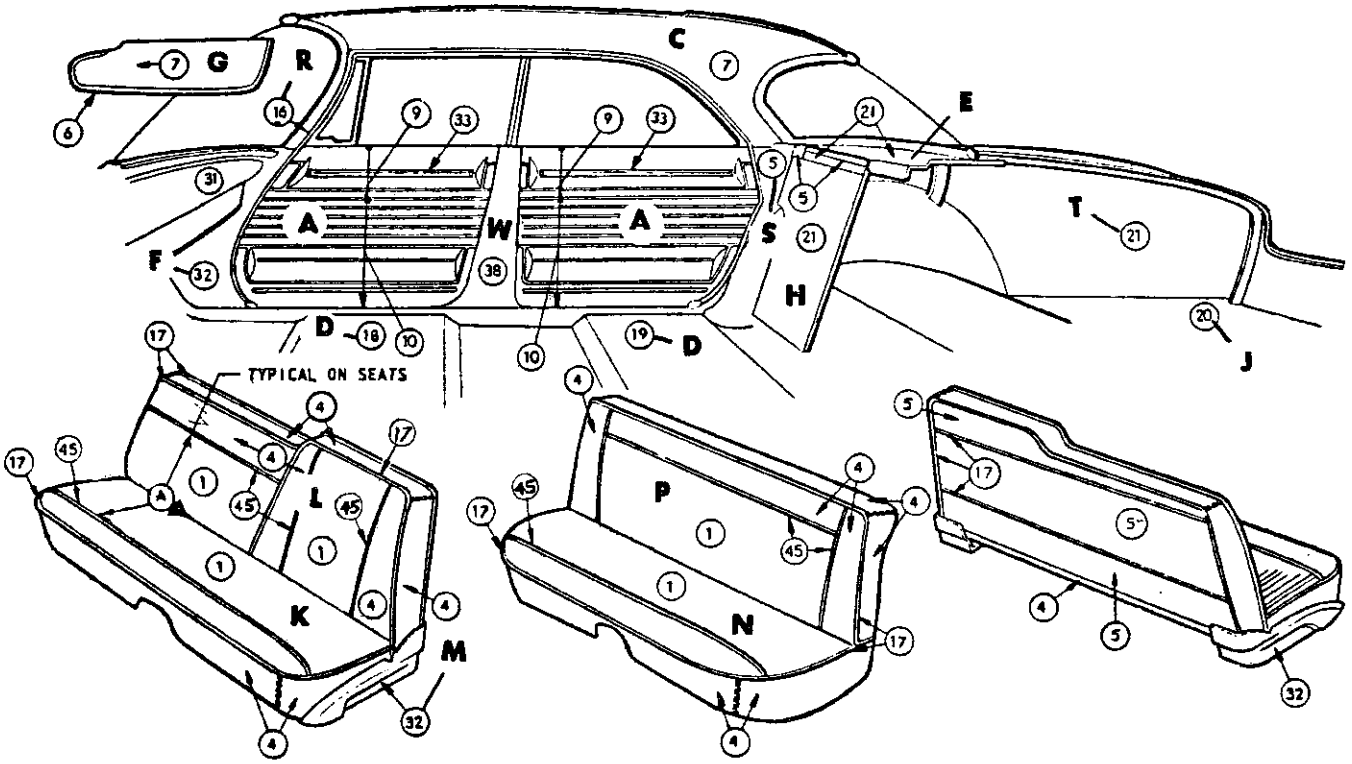

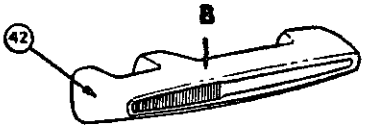

DISTRIBUTION OF MATERIAL

1	BODY CLOTH 1	
4	IMITATION LEATHER	28-AM-22
5	IMITATION LEATHER	19-C-22
6	IMITATION LEATHER	19A-C-22
7	IMITATION LEATHER	12-Y-70
9	IMITATION LEATHER	19-DJ-22
10	IMITATION LEATHER	.012-L-22
16	LACE	
17	EXTRUDED VINYL	
18	FLOOR COVERING-FRONT-RUBBER	
19	FLOOR COVERING-REAR-RUBBER	
20	FLOOR COVERING-LUGG. COMPT. -RUBBER	
21	EMBOSSED CARDBOARD	
30	PLASTIC	
31	PAINT	
32	METAL	
33	MOULDING	
35	POLYETHYLENE	
36	MYLAR	
38	MOULDED RESIN	
39	CARPET	
41	MOULDED VINYL	
42	PLASTISOL	
45	MYLAR WELT	

Distribution Drawing Legend Page Appears Following Illustration Section

Codes 341, 343, 344, 345

SD3L-431B

1962 DODGE CUSTOM 880 SD3-L
SPECIAL 4 DOOR SEDAN
CLOTH & IMITATION LEATHER TRIM

MyMopar.com

NOTES

MyMopar.com

1962 DODGE, LANCER AND DART - S SERIES

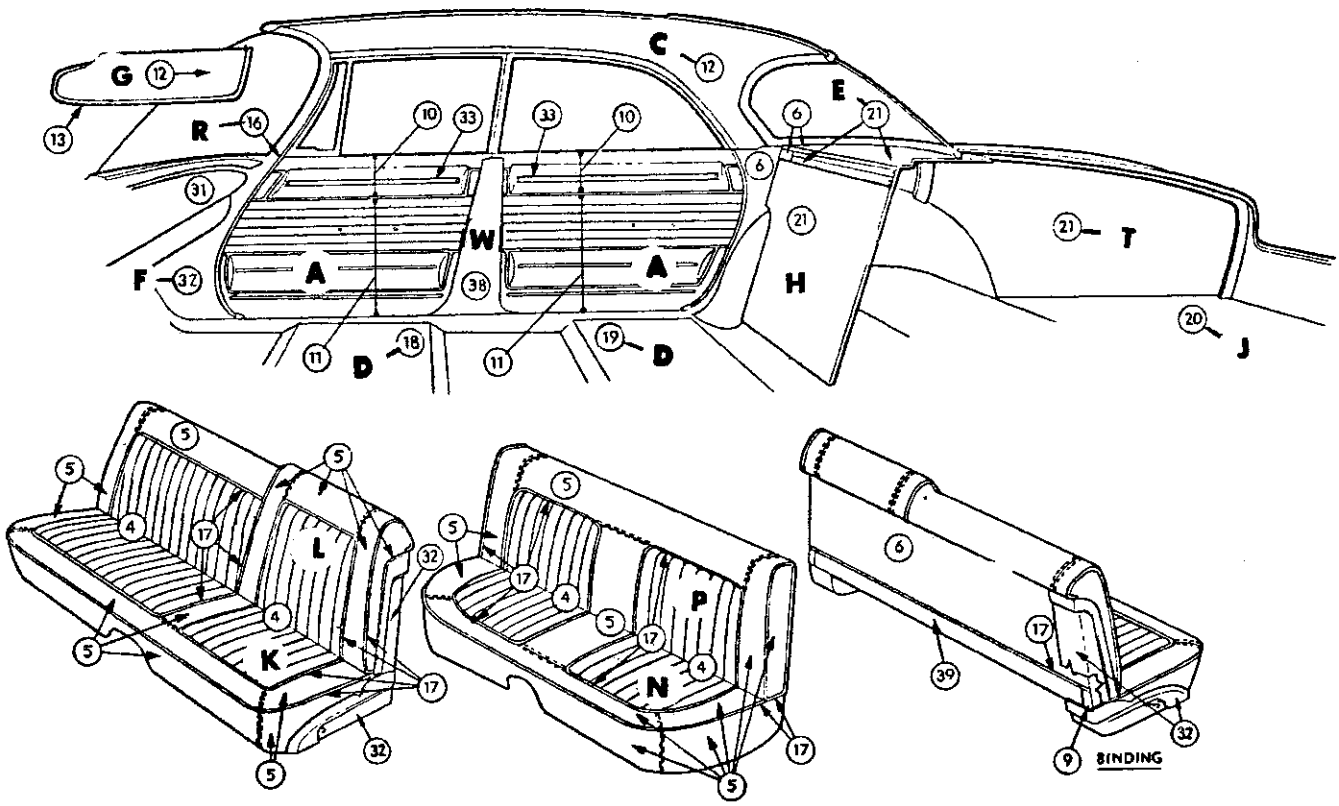

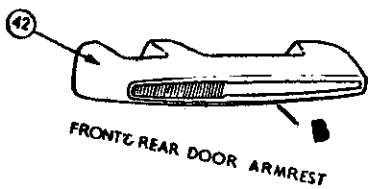

DISTRIBUTION OF MATERIAL

4	IMITATION LEATHER	28-AM-46
5	IMITATION LEATHER	28-AM-22
6	IMITATION LEATHER	19-C-22
9	IMITATION LEATHER	19B-C-22
10	IMITATION LEATHER	19-DJ-22
11	IMITATION LEATHER	.012-L-22
12	IMITATION LEATHER	12A-Y-70
13	IMITATION LEATHER	19C-C-22
16	LACE	
17	EXTRUDED VINYL	
18	FLOOR COVERING-FRONT-RUBBER	
19	FLOOR COVERING-REAR-RUBBER	
20	FLOOR COVERING-LUGG. COMPT. -RUBBER	
21	EMBOSSED CARDBOARD	
30	PLASTIC	
31	PAINT	
32	METAL	
33	MOULDING	
35	POLYETHYLENE	
36	MYLAR	
38	MOULDED RESIN	
39	CARPET	
42	PLASTISOL	

Distribution Drawing Legend Page Appears Following Illustration Section

Codes 404, 405

SDL-434 1962 DODGE CUSTOM 880 SD3-L SPECIAL 4 DOOR SEDAN IMITATION LEATHER TRIM

MyMopar.com

1962 DODGE, LANCER AND DART - S SERIES

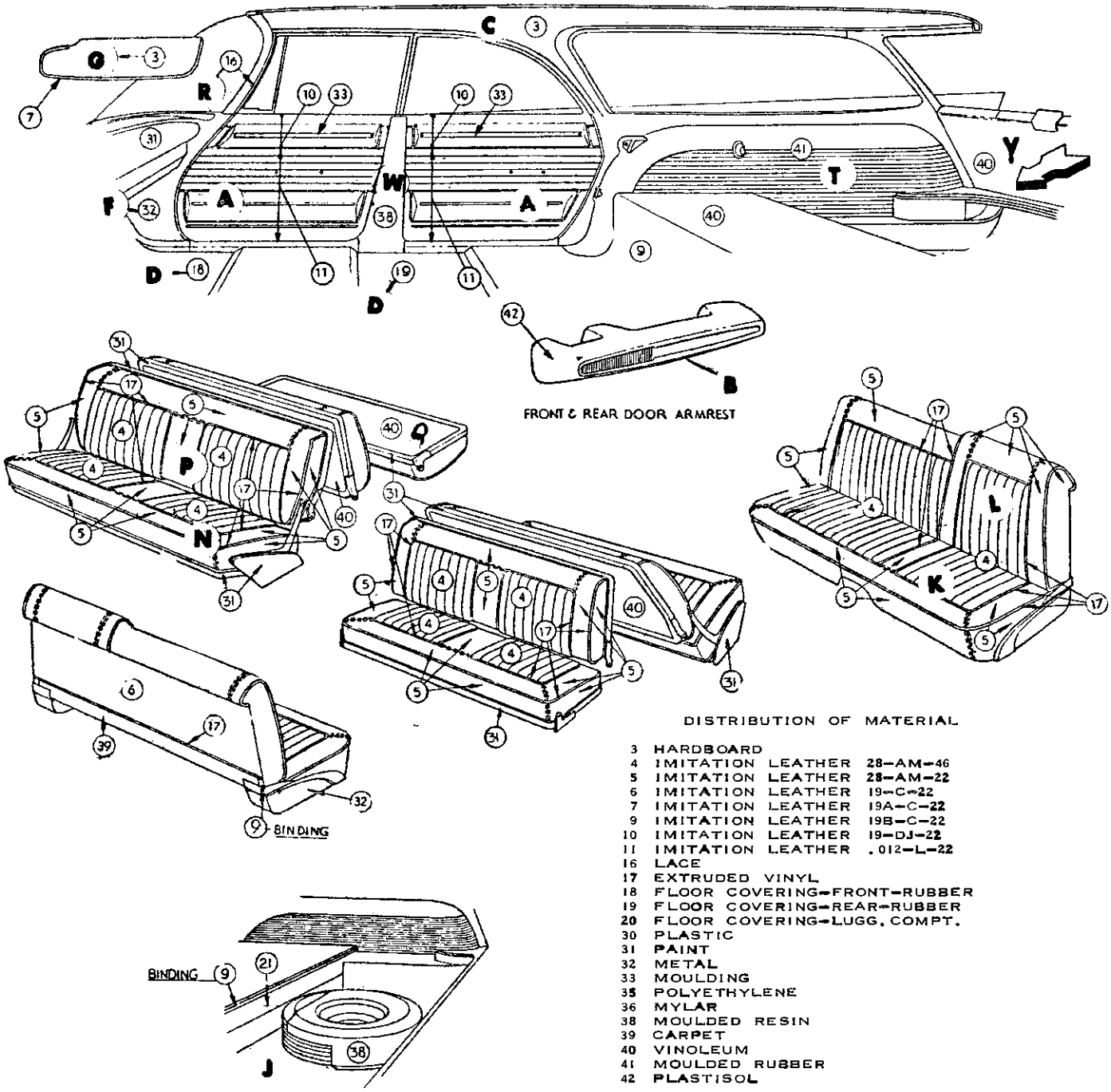

DISTRIBUTION OF MATERIAL

3	HARDBOARD	
4	IMITATION LEATHER	28-AM-46
5	IMITATION LEATHER	28-AM-22
6	IMITATION LEATHER	19-C-22
7	IMITATION LEATHER	19A-C-22
9	IMITATION LEATHER	19B-C-22
10	IMITATION LEATHER	19-DJ-22
11	IMITATION LEATHER	.012-L-22
16	LACE	
17	EXTRUDED VINYL	
18	FLOOR COVERING-FRONT-RUBBER	
19	FLOOR COVERING-REAR-RUBBER	
20	FLOOR COVERING-LUGG. COMPT.	
30	PLASTIC	
31	PAINT	
32	METAL	
33	MOULDING	
35	POLYETHYLENE	
36	MYLAR	
38	MOULDED RESIN	
39	CARPET	
40	VINOLEUM	
41	MOULDED RUBBER	
42	PLASTISOL	

Distribution Drawing Legend Page Appears Following Illustration Section

SDL-464

Codes 403, 404, 405

1962 DODGE CUSTOM 880 SD3-L SPECIAL 4 DOOR STATION WAGON IMITATION LEATHER TRIM

MyMopar.com

1962 DODGE, LANCER AND DART - S SERIES

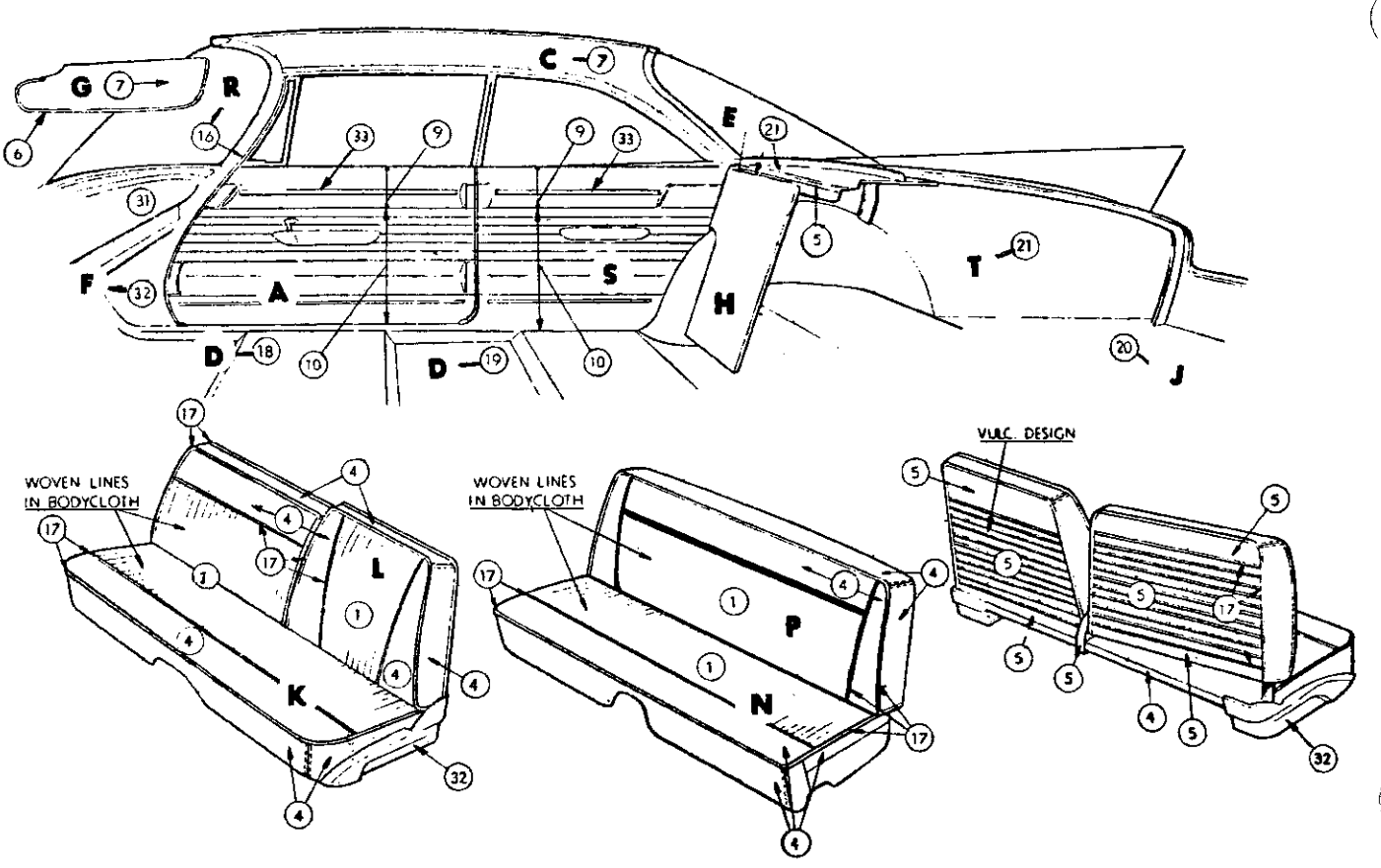

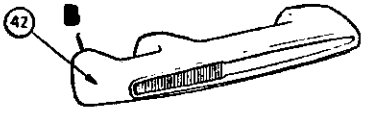

FRONT DOOR ARMREST

REAR QTR. ARMREST

DISTRIBUTION OF MATERIAL

1	BODY CLOTH I	
4	IMITATION LEATHER	28-AM-22
5	IMITATION LEATHER	19-C-22
6	IMITATION LEATHER	19A-C-22
7	IMITATION LEATHER	12-Y-70
9	IMITATION LEATHER	19-DJ-22
10	IMITATION LEATHER	.012-L-22
16	LACE	
17	EXTRUDED VINYL	
18	FLOOR COVERING-FRONT-RUBBER	
19	FLOOR COVERING-REAR-RUBBER	
20	FLOOR COVERING-LUGG. COMPT. -RUBBER	
21	EMBOSSED CARDBAORD	
30	PLASTIC	
31	PAINT	
32	METAL	
33	MOULDING	
35	POLYETHYLENE	
36	MYLAR	
38	MOULDED RESIN	
39	CARPET	
41	MOULDED VINYL	
42	PLASTISOL	

Distribution Drawing Legend Page Appears Following Illustration Section

Codes 301, 303, 304, 305

SD1-L231 1962 DODGE CUSTOM 880 SD3-L SPECIAL CLUB COUPE CLOTH AND IMITATION LEATHER TRIM

MyMopar.com

1962 DODGE, LANCER AND DART - S SERIES

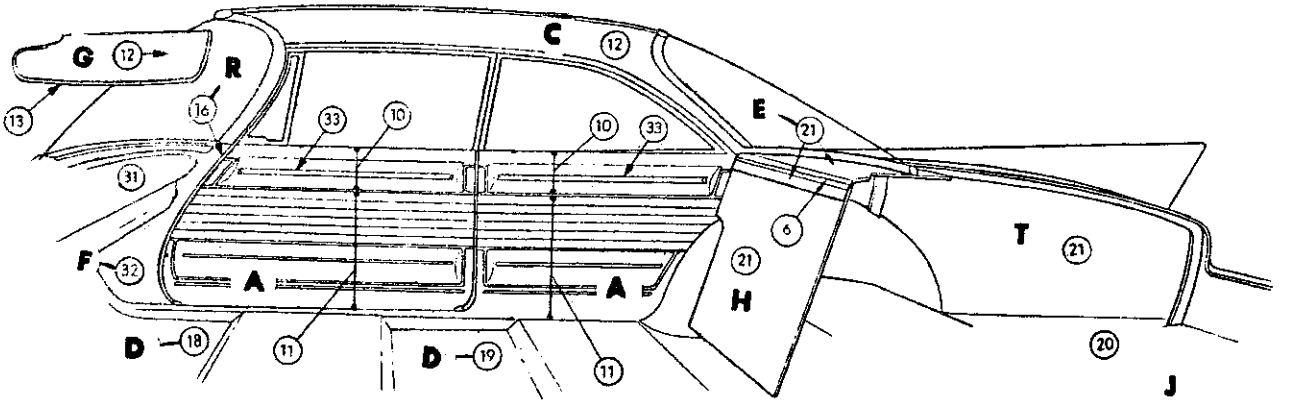

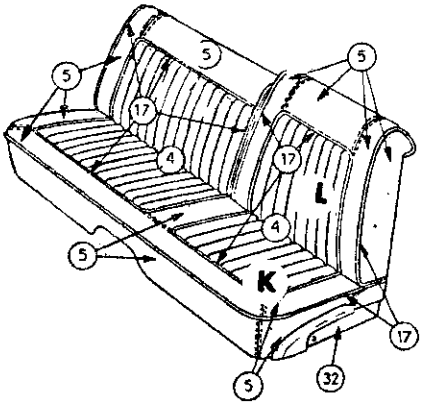

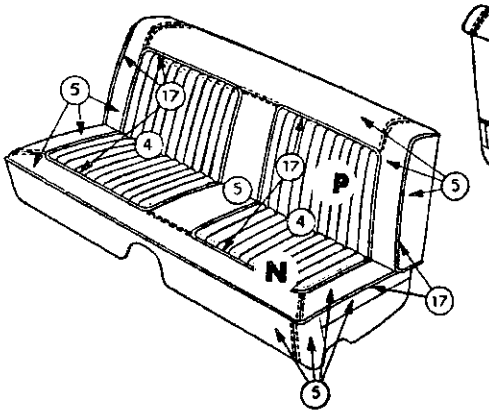

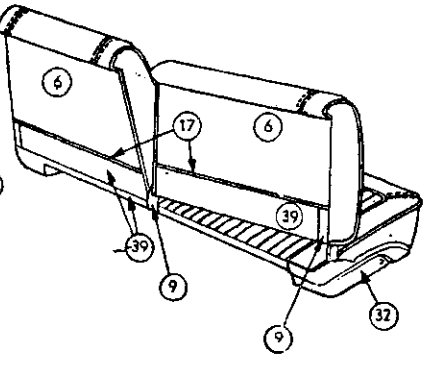

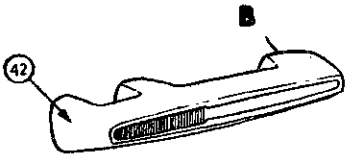

FRONT DOOR ARMREST

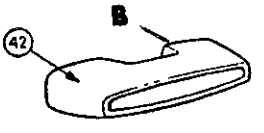

REAR QTR. ARMREST

DISTRIBUTION OF MATERIAL

1	BODY CLOTH 1	
2	BODY CLOTH 2	
4	IMITATION LEATHER	28-AM-46
5	IMITATION LEATHER	28-AM-22
6	IMITATION LEATHER	19-C-22
9	IMITATION LEATHER	19B-C-22
10	IMITATION LEATHER	19-DJ-22
11	IMITATION LEATHER	.012-L-22
12	IMITATION LEATHER	12A-Y-70
13	IMITATION LEATHER	19C-C-22
16	LACE	
17	EXTRUDED VINYL	
18	FLOOR COVERING-FRONT-RUBBER	
19	FLOOR COVERING-REAR-RUBBER	
20	FLOOR COVERING-LUGG. COMPT.-RUBBER	
21	EMBOSSED CARDBOARD	
30	PLASTIC	
31	PAINT	
32	METAL	
33	MOULDING	
34	SHEETING	
35	POLYETHYLENE	
36	MYLAR	
38	MOULDED RESIN	
39	CARPET	
42	PLASTISOL	

Distribution Drawing Legend Page Appears Following Illustration Section

Codes 404, 405

SDL-234 1962 DODGE CUSTOM 880 SD3-L SPECIAL CLUB COUPE IMITATION LEATHER TRIM

MyMopar.com

1962 DODGE, LANCER AND DART - S SERIES

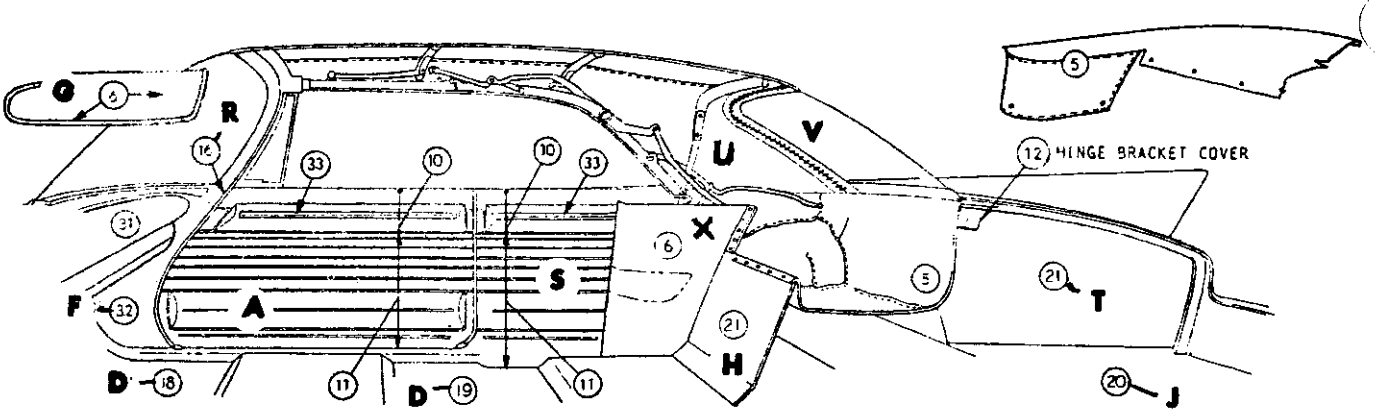

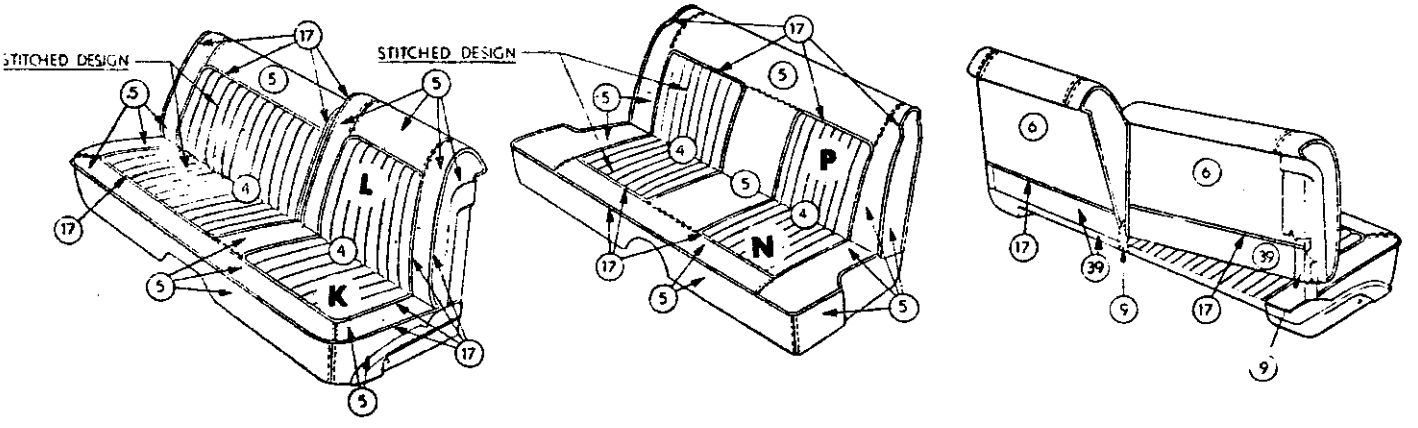

FRONT DOOR ARMREST

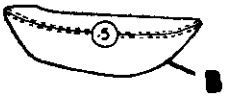

REAR QUARTER PANEL ARM REST

DISTRIBUTION OF MATERIAL

4	IMITATION LEATHER	28-AM-46
5	IMITATION LEATHER	28-AM-22
6	IMITATION LEATHER	19-C-22
9	IMITATION LEATHER	19B-C-22
10	IMITATION LEATHER	19-DJ-22
11	IMITATION LEATHER	.012-L-22
12	IMITATION LEATHER	19D-C-22
16	LACE	
17	EXTRUDED VINYL	
18	FLOOR COVERING-FRONT-RUBBER	
19	FLOOR COVERING-REAR-RUBBER	
20	FLOOR COVERING-LUGG. COMPT.-RUBBER	
21	EMBOSSED CARDBOARD	
30	PLASTIC	
31	PAINT	
32	METAL	
33	MOULDING	
35	POLYETHYLENE	
36	MYLAR	
38	MOULDED RESIN	
39	CARPET	
42	PLASTISOL	

Distribution Drawing Legend Page Appears Following Illustration Section

Codes 401, 404, 405

SDL-274 1962 DODGE CUSTOM 880 SD3-L CONVERTIBLE COUPE IMITATION LEATHER TRIM

MyMopar.com

1962 DODGE, LANCER AND DART - S SERIES

Distribution Drawing Legend

See Illustrations For Letter Identification

Letter	Description	Code
A	Panel, Door Trim	23-92-5
B	Arm Rest, Door, Front	23-76-3
	Center, Front Seat	23-76-34
	Door, Rear	23-76-59
	Quarter Panel	23-76-66
C	Headlining	23-86-3
D	Floor Cover, Front, Carpet	23-79-3
	Rubber	23-20-8
	Rear, Carpet	23-79-33
	Rubber	23-20-41
E	Panel, Shelf Trim	23-102-3
F	Panel, Cowl Trim	23-91-6
G	Visor	23-103-3
H	Panel, Luggage Compartment Front	23-96-3
J	Cover, Luggage Compartment Floor	23-20-29
K	Cover, Front Seat Cushion	23-108-5
L	Cover, Front Seat Back	23-108-16
M	Cover, Front Seat Hinge	23-108-84
N	Cover, Rear Seat Cushion	23-109-36
P	Cover, Rear Seat Back	23-109-4
Q	Cover, Rear Seat Cushion Bottom Panel	23-109-40
R	Weathercord, Door	23-113-2
	Hinge Pillar	23-113-25
	Lock Pillar	23-113-30
	w/Weatherstrip	23-66-33
S	Panel, Quarter Trim	23-101-3
T	Cover, Wheelhouse	23-96-8
U	Top Deck and Side Quarter	23-112-108
V	Curtain, Folding Top Back	23-112-45
W	Cover, Center Pillar	23-99-4
X	Panel, Folding Top Well Pocket	23-112-153
Y	Cover, Tailgate Inside Panel	23-79-79
Z	Cover, Rear Seat Back Panel	23-109-5

MyMopar.com

NOTES

MyMopar.com

1962 LANCER - DART - S SERIES

TRIM CODES

BODY CODE	COLUMN LEGEND
	SL1-L (170)
711 (21)	2 D. Sedan
713 (41)	4 D. Sedan
756 (45A)	4 D. Wagon (2 Seat)
783 (41)	4 D. Sedan (Taxi)
	SL1-H (770)
731 (21)	2 D. Sedan
733 (41)	4 D. Sedan
776 (45A)	4 D. Wagon (2 Seat)
	SL1-P (GT)
742 (23)	2 D. Hard Top
	SD1-L
401 (21)	2 D. Sedan (Fleet)
403 (41)	4 D. Sedan (Fleet)
411 (21)	2 D. Sedan
413 (41)	4 D. Sedan
456 (45A)	4 D. Wagon (2 Seat)
483 (41)	4 D. Sedan (Taxi)
491 (21)	2 D. Sedan (Police)
493 (41)	4 D. Sedan (Police)
496 (45A)	4 D. Wagon (Police) (2 Seat)
	SD2-L
501 (21)	2 D. Sedan (Fleet)
503 (41)	4 D. Sedan (Fleet)
511 (21)	2 D. Sedan
513 (41)	4 D. Sedan
556 (45A)	4 D. Wagon (2 Seat)
583 (41)	4 D. Sedan (Taxi)
591 (21)	2 D. Sedan (Police)
593 (41)	4 D. Sedan (Police)
596 (45A)	4 D. Sedan (Police) (2 Seat)
	SD1-M (330)
421 (21)	2 D. Sedan
422 (23)	2 D. Hard Top
423 (41)	4 D. Sedan
466 (45A)	4 D. Wagon (2 Seat)
	SD2-M (330)
521 (21)	2 D. Sedan
522 (23)	2 D. Hard Top
523 (41)	4 D. Sedan
566 (45A)	4 D. Wagon (2 Seat)
567 (45B)	4 D. Wagon (3 Seat)
	SD1-H (440)
432 (23)	2 D. Hard Top
433 (41)	4 D. Sedan

★ Indicates use as required.
B Indicates parts not listed in any previous parts book.
Right and left part numbers are on same line, first number is right, second number is left.

Printed in U.S.A.
Prices and specifications subject to change without notice.
Nov. 30, 1961 Supersedes Sept. 15, 1961.

MyMopar.com

TRIM CODES - Cont'd

BODY CODE	COLUMN LEGEND
	SD2-H (440)
532 (23)	2 D. Hard Top
533 (41)	4 D. Sedan
534 (43)	4 D. Hard Top
576 (45A)	4 D. Wagon (2 Seat)
577 (45B)	4 D. Wagon (3 Seat)
535 (27)	Convertible
	SD2-P (500)
542 (23)	2 D. Hard Top
544 (43)	4 D. Hard Top
545 (27)	Convertible
	SD3-L (880)
612 (23)	2 D. Hard Top
613 (41)	4 D. Sedan
614 (43)	4 D. Hard Top
615 (27)	Convertible
658 (45A)	4 D. Wagon (2 Seat)
659 (45B)	4 D. Wagon (3 Seat)

CONVERTIBLE TOP COLOR LEGEND

SD2-H	6 Black	7 White
SD2-P	6 Black	8 Beige

STARTING SERIAL NUMBERS

		Detroit Built	St. Louis Built	Newark Built	Los Angeles Built
SL1-L	(Lancer 170)	7122-500001	7127-100001	7126-100001	7125-100001
SL1-L	(Lancer Sub. 170)	7522-500001	7527-100001	7526-100001	7525-100001
SL1-H	(Lancer 770)	7322-100001	7327-100001	7326-100001	7325-100001
SL1-H	(Lancer Sub. 770)	7722-100001	7727-100001	7726-100001	7725-100001
SL1-P	(G.T.)	7422-100001	7427-100001	7426-100001	7425-100001
SD1-L	(Dart)	4122-100001	4127-100001	4126-100001	4125-100001
SD1-L	(Dart Sub.)	4522-100001	4527-100001	4526-100001	4525-100001
SD1-M	(Dart 330)	4222-100001	4227-100001	4226-100001	4225-100001
SD1-M	(Dart 330 Sub.)	4622-100001	4627-100001	4626-100001	4625-100001
SD1-H	(Dart 440)	4322-100001	4327-100001	4326-100001	4325-100001
SD2-L	(Dart)	5122-100001	5127-100001	5126-100001	5125-100001
SD2-L	(Dart Sub.)	5522-100001	5527-100001	5526-100001	5525-100001
SD2-M	(Dart 330)	5222-100001	5227-100001	5226-100001	5225-100001
SD2-M	(Dart 330 Sub.)	5622-100001	5627-100001	5626-100001	5625-100001
SD2-H	(Dart 440)	5322-100001	5327-100001	5326-100001	5325-100001
SD2-H	(Dart 440 Sub.)	5722-100001	5727-100001	5726-100001	5725-100001
SD2-P	(Polara 500)	5422-100001			
SD3-L	(Custom 880	6123-169564			

★ Indicates use as required.
⊟ Indicates parts not listed in any previous parts book.
May 1, 1962 Supersedes Nov. 30, 1961.

Printed in U.S.A.
Prices and specifications subject to change without notice.
Right and left part numbers are on same line, first number is right, second number is left.
* Indicates change or addition.

MyMopar.com

1962 PASSENGER CAR PARTS CATALOG

TRIM CODE	MODEL	MATERIAL Cloth	Vinyl	Leather	COLOR	4 D. Sed.	Special 4 D. Sed.	Sub.	2 D. Sed.	Spec. Club Cpe.	Conv. Cpe.
611	L1-L	★	★	-	Black and Gray, w/Blue	★	-	-	★	-	-
614	L1-L	★	★	-	Black and Gray	★	-	-	★	-	-
615	L1-L	★	★	-	Black and Gray, w/Red	★	-	-	★	-	-
641	L1-L	-	★	-	Black and Gray, w/Blue	-	-	★	-	-	-
644	L1-L	-	★	-	Black and Gray	-	-	★	-	-	-
645	L1-L	-	★	-	Black and Gray, w/Red	-	-	★	-	-	-
631	L1-H	★	★	-	Blue	★	-	★	★	-	-
632	L1-H	★	★	-	Green	★	-	★	★	-	-
633	L1-H	★	★	-	Cocoa	★	-	★	★	-	-
635	L1-H	★	★	-	Red	★	-	★	★	-	-
651	L1-P	-	★	-	Blue	-	-	-	-	★	-
652	L1-P	-	★	-	Green	-	-	-	-	★	-
653	L1-P	-	★	-	Cocoa	-	-	-	-	★	-
655	L1-P	-	★	-	Red	-	-	-	-	★	-
664	L1-L	-	★	-	Gray	★	-	-	-	-	-
671	L1-H	-	★	-	Blue	★	-	-	-	-	-
675	L1-H	-	★	-	Red	★	-	-	-	-	-
694	L1-L	-	★	-	Gray	★	-	-	-	-	-
701	D1-L, D2-L	★	★	-	Blue	★	-	-	★	-	-
703	D1-L, D2-L	★	★	-	Cocoa	★	-	-	★	-	-
704	D1-L, D2-L	★	★	-	Gray	★	-	-	★	-	-
301	D3-L	★	★	-	Blue	★	★	-	-	-	-
303	D3-L	★	★	-	Cocoa	★	★	-	-	-	-
304	D3-L	★	★	-	Gray	★	★	-	-	-	-
305	D3-L	★	★	-	Red	★	★	-	-	-	-
341	D3-L	★	★	-	Blue	★	★	-	-	★	-
343	D3-L	★	★	-	Cocoa	★	★	-	-	★	-
344	D3-L	★	★	-	Gray and Black	★	★	-	-	★	-
345	D3-L	★	★	-	Red	★	★	-	-	★	-
401	D3-L	★	★	-	Blue	-	-	-	-	-	★
403	D3-L	★	★	-	Cocoa	-	-	★	-	-	-
404	D3-L	★	★	-	Black	-	★	★	-	★	★
405	D3-L	★	★	-	Red	-	★	★	-	★	★
711	D1-M, D2-M	★	★	-	Blue	★	-	★	★	★	-
712	D1-M, D2-M	★	★	-	Green	★	-	-	★	-	-
713	D1-M, D2-M	★	★	-	Cocoa	★	-	★	★	★	-
714	D1-M, D2-M	★	★	-	Gray	★	-	★	★	★	-
715	D1-M, D2-M	★	★	-	Red	★	-	★	-	★	-
721	D1-H, D2-H	★	★	-	Blue	★	-	-	-	-	-
722	D1-H, D2-H	★	★	-	Green	★	-	-	-	-	-
723	D1-H, D2-H	★	★	-	Cocoa	★	-	-	-	-	-
724	D1-H, D2-H	★	★	-	Gray	★	-	-	-	-	-
725	D1-H, D2-H	★	★	-	Red	★	-	-	-	-	-
801	D1-L, D2-L	-	★	-	Blue	-	-	★	-	-	-
803	D1-L, D2-L	-	★	-	Tan	-	-	★	-	-	-
804	D1-L, D2-L	-	★	-	Gray	-	-	★	-	-	-
811	D1-H, D2-H, D2-P	-	★	-	Blue	-	★	★	-	★	★
812	D1-H, D2-H, D2-P	-	★	-	Green	-	★	★	-	★	★
813	D1-H, D2-H, D2-P	-	★	-	Cocoa	-	★	★	-	★	★
814	D1-H, D2-H	-	★	-	Gray	-	★	★	-	★	★
815	D1-H, D2-H, D2-P	-	★	-	Red	-	★	★	-	★	★
821	D1-L, D2-L	-	★	-	Blue	★	-	-	-	-	-
824	D1-L, D2-L	-	★	-	Gray	★	-	-	-	-	-
831	D1-M, D2-M	-	★	-	Blue	★	-	-	-	-	-
834	D1-M, D2-M	-	★	-	Gray	★	-	-	-	-	-
841	D1-H, D2-H	-	★	-	Blue	★	-	-	-	-	-
844	D1-H, D2-H	-	★	-	Gray	★	-	-	-	-	-
851	D2-P	-	★	-	Blue and Beige	-	-	-	-	★	★
852	D2-P	-	★	-	Green and Beige	-	-	-	-	★	★
853	D2-P	-	★	-	Cocoa and Beige	-	-	-	-	★	★
855	D2-P	-	★	-	Red and Beige	-	-	-	-	★	★
856	D2-P	-	★	-	Black and Beige	-	-	-	-	★	★
861	D1-M, D2-M	-	★	-	Blue	-	-	★	-	-	-
863	D1-M, D2-M	-	★	-	Cocoa	-	-	★	-	-	-
864	D1-M, D2-M	-	★	-	Gray	-	-	★	-	-	-
865	D1-M, D2-M	-	★	-	Red	-	-	★	-	-	-
894	D1-L, D2-L	-	★	-	Gray	★	-	-	★	-	-

★ Indicates use as required.
⊟ Indicates parts not listed in any previous parts book.
Right and left part numbers are on same line, first number is right, second number is left.
* Indicates change or addition.

Printed in U.S.A.
Prices and specifications subject to change without notice.
March 8, 1963 Supersedes May 1, 1962.

MyMopar.com

NOTE: RIGHT HAND AND LEFT HAND PARTS LISTED ON THE SAME LINE. Whenever right and left hand parts are identified by consecutive part numbers they will be listed as in the following example: PANEL, Door Trim 2083 344-5
Interpreted, this indicates that Panel, right is Part No. 2083 344 and Panel, left is Part No. 2083 345.

CODE	REMARKS	PER CAR	SED.	SP. 4 D.	SUB.	SP. CL. CP.	CV. CP.
23-70-5	COVER, Wheelhouse Second Seat Back Hinge Bracket D3-L						
	(code 403) (cocoa)	1	---- ---	---- ---	2178 611-2		
	(code 404) (black)	1	---- ---	---- ---	2169 991-2		
	(code 405) (red)	1	---- ---	---- ---	*2178 332-3		
23-70-6	COVER, Second Seat Back Hinge D3-L	1	---- ---	---- ---	2094 882-3		
23-70-19	INSERT, Second Seat Back Panel D3-L						
	(codes 403, 404, 405) (gray)	1	---- ---	---- ---	2169 947		
23-71-1	COVER, Front Console D2-P						
	(code 851)	1	---- ---	---- ---	---- ---	2296 320-1	2296 320-1
	(code 852)	1	---- ---	---- ---	---- ---	2296 322-3	2296 322-3
	(code 853)	1	---- ---	---- ---	---- ---	2296 324-5	2296 324-5
	(code 855)	1	---- ---	---- ---	---- ---	*2296 326-7	*2296 326-7
	(code 856)	1	---- ---	---- ---	---- ---	*2296 328-9	*2296 328-9
23-76-3	ARM REST, Front Door L1-L, L1-H, L1-P						
	(codes 611, 614, 615, 641, 644, 645) (black)	2	2083 862	---- ---	2083 862		
	(codes 631, 651, 671) (blue)	2	2273 000	---- ---	2273 000	2273 000	
	(codes 632, 652) (green)	2	2273 001	---- ---	2273 001	2273 001	
	(codes 633, 653) (cocoa)	2	2273 002	---- ---	2273 002	2273 002	
	(codes 635, 655, 675) (red)	2	2273 004	---- ---	2273 004	2273 004	
	(code 664) (gray)	2	2273 003				
	(code 694) (gray)	2	2212 691				
	D1, D2						
	(codes 701, 711, 801, 821, 831, 861) (blue)	2	2273 000	---- ---	2273 000	2273 000	
	(codes 703, 713, 803, 863) (cocoa)	2	2273 002	---- ---	2273 002	2273 002	
	(codes 704, 714, 804, 824, 834) (gray)	2	2273 003	---- ---	2273 003	2273 003	
	(code 712) (green)	2	2273 001	---- ---	2273 001	2273 001	
	(code 715) (red)	2	2273 004	---- ---	2273 004	2273 004	
	(codes 721, 811, 841, 851) (blue)	1	2273 006-7	2273 006-7	2273 006-7	2273 006-7	2273 006-7
	(codes 722, 812, 852) (green)	1	2273 008-9	2273 008-9	2273 008-9	2273 008-9	2273 008-9
	(codes 723, 813, 853) (cocoa)	1	2273 010-11	2273 010-11	2273 010-11	2273 010-11	2273 010-11
	(codes 724, 814, 844) (gray)	1	2273 012-3	2273 012-3	2273 012-3	2273 012-3	2273 012-3
	(codes 725, 815, 855) (red)	1	2273 014-5	2273 014-5	2273 014-5	2273 014-5	2273 014-5
	(code 856) (black)	2	---- ---	---- ---	---- ---	2297 160-61	2297 160-61
	(code 894) (gray)	2	2212 691				
	D3-L						
	(blue)	1	*2273 006-7	*2273 006-7	---- ---	*2273 006-7	*2273 006-7
	(cocoa)	1	*2273 010-11	*2273 010-11	*2273 010-11	*2273 010-11	
	(gray)	1	*2273 012-3	*2273 012-3	---- ---	*2273 012-3	
	(black)	1	---- ---	*2177 818-9	*2177 818-9	*2177 818-9	*2177 818-9
	(red)	1	*2273 014-5	*2273 014-5	*2273 014-5	*2273 014-5	*2273 014-5
	SCREW	4	* 162 090	* 162 090	* 162 090	* 162 090	* 162 090
23-76-16	NUT, Arm Rest to Panel L1-H, D1, D2, D3	★	1280 134	1280 134	1280 134	1280 134	1280 134

★ Indicates use as required.
⊟ Indicates parts not listed in any previous parts book.
March 8, 1963 Supersedes May 1, 1962.

Printed in U.S.A.
Prices and specifications subject to change without notice.
Right and left part numbers are on same line, first number is right, second number is left.
* Indicates change or addition.

MyMopar.com

CODE	REMARKS	PER CAR	SED.	SP. 4 D.	SUB.	SP. CL. CP.	CV. CP.
23-76-18	ARM REST, Front Seat Back Center						
	D1-H, D2-H						
	(codes 721, 811)	1	2273 740	2273 740	2273 740	2273 740	2273 740
	(codes 722, 812)	1	2273 741	2273 741	2273 741	2273 741	2273 741
	(codes 723, 813)	1	2273 742	2273 742	2273 742	2273 742	2273 742
	(codes 724, 814)	1	2273 743	2273 743	2273 743	2273 743	2273 743
	(codes 725, 815)	1	2273 744	2273 744	2273 744	2273 744	2273 744
23-76-27	HOOK, Front Seat Arm Rest Frame Retainer D1, D2	1	1918 568	1918 568	1918 568	1918 568	*1918 568
23-76-28	BAR, Front Seat Center Arm Rest Lock D1, D2	1	2270 102	2270 102	2270 102	2270 102	*2270 102
23-76-34	COVER, Front Seat Back Center Arm Rest						
	(codes 721, 811)	1	2271 995	2271 995	2271 995	2271 995	2271 995
	(codes 722, 812)	1	2271 996	2271 996	2271 996	2271 996	2271 996
	(codes 723, 813)	1	2271 997	2271 997	2271 997	2271 997	2271 997
	(codes 724, 814)	1	2271 998	2271 998	2271 998	2271 998	2271 998
	(codes 725, 815)	1	2271 999	2271 999	2271 999	2271 999	2271 999
23-76-59	ARM REST, Rear Door						
	L1-L, L1-H						
	(codes 611, 614, 615, 641, 644, 645) (black)	2	2083 862	---- ---	2083 862		
	(codes 631, 671) (blue)	2	2273 000	---- ---	2273 000		
	(code 632) (green)	2	2273 001	---- ---	2273 001		
	(code 633) (cocoa)	2	2273 002	---- ---	2273 002		
	(codes 635, 675) (red)	2	2273 004	---- ---	2273 004		
	(code 664) (gray)	2	2273 003				
	(code 694) (gray)	2	2212 691				
	D1, D2, (except D2-H Sub.)						
	(codes 701, 711, 801, 821, 831) (blue)	2	2273 000	---- ---	2273 000		
	(codes 703, 713, 803) (cocoa)	2	2273 002	---- ---	2273 002		
	(codes 704, 714, 804, 824, 834) (gray)	2	2273 003	---- ---	2273 003		
	(code 712) (green)	2	2273 001	---- ---	2273 001		
	(code 715) (red)	2	2273 004	---- ---	2273 004		
	(codes 721, 811, 841) (blue)	1	2273 006-7	---- ---	2273 006-7		
	(codes 722, 812) (green)	1	2273 008-9	---- ---	2273 008-9		
	(codes 723, 813) (cocoa)	1	2273 010-1	---- ---	2273 010-1		
	(codes 724, 814, 844) (gray)	1	2273 012-3	---- ---	2273 012-3		
	(codes 725, 815) (red)	1	2273 014-5	---- ---	2273 014-5		
	(code 894) (gray)	2	2212 691				
	D2-H (large arm rest) (15")						
	(code 811) (blue)	1	---- ---	---- ---	2273 006-7		
	(code 812) (green)	1	---- ---	---- ---	2273 008-9		
	(code 813) (cocoa)	1	---- ---	---- ---	2273 010-1		
	(code 814) (gray)	1	---- ---	---- ---	2273 012-3		
	(code 815) (red)	1	---- ---	---- ---	2273 014-5		
	D2-H (small arm rest) (9")						
	(code 811) (blue)	2	---- ---	---- ---	2273 000		
	(code 812) (green)	2	---- ---	---- ---	2273 001		
	(code 813) (cocoa)	2	---- ---	---- ---	2273 002		
	(code 814) (gray)	2	---- ---	---- ---	2273 003		
	(code 815) (red)	2	---- ---	---- ---	2273 004		

★ Indicates use as required.
⊟ Indicates parts not listed in any previous parts book.
Right and left part numbers are on same line, first number is right, second number is left.
* Indicates change or addition.

Printed in U.S.A.
Prices and specifications subject to change without notice.
March 8, 1963 Supersedes May 1, 1962.

MyMopar.com

CODE	REMARKS	PER CAR	SED.	SP. 4 D.	SUB.	SP. CL. CP.	CV. CP.
23-76-59	ARM REST, Rear Door - Cont'd						
	D3-L						
	(codes 301, 341) (blue)	1	*2273 006-7	*2273 006-7			
	(codes 303, 343, 403) (cocoa)	1	*2273 010-11	*2273 010-11	*2273 010-11		
	(codes 304, 344) (gray)	1	*2273 012-3	*2273 012-3			
	(codes 305, 345, 405) (red)	1	*2273 014-5	*2273 014-5	*2273 014-5		
	(code 404) (black)	1	---- ---	2177 818-9	2177 818-9		
23-76-66	ARM REST, Rear Quarter						
	L1-H, L1-P						
	(codes 631, 651) (blue)	2	2273 000	---- ---	---- ---	2273 000	
	(codes 632, 652) (green)	2	2273 001	---- ---	---- ---	2273 001	
	(codes 633, 653) (cocoa)	2	2273 002	---- ---	---- ---	2273 002	
	(codes 635, 655) (red)	2	2273 004	---- ---	---- ---	2273 004	
	D1, D2						
	(codes 701, 711, 811, 851) (blue)	2	2273 000	---- ---	---- ---	2273 000	
	(codes 703, 713, 813, 853) (cocoa)	2	2273 002	---- ---	---- ---	2273 002	
	(codes 704, 714, 814) (gray)	2	2273 003	---- ---	---- ---	2273 003	
	(codes 712, 812, 852) (green)	2	2273 001	---- ---	---- ---	2273 001	
	(codes 715, 815, 855) (red)	2	2273 004	---- ---	---- ---	2273 004	
	(code 894) (gray)	2	2212 691				
	(code 856) (black)	2	---- ---	---- ---	---- ---	2297 159	
	D3-L						
	(code 301) (blue)	2	---- ---	---- ---	---- ---	2273 000	
	(code 303) (cocoa)	2	---- ---	---- ---	---- ---	2273 002	
	(code 304) (gray)	2	---- ---	---- ---	---- ---	2273 003	
	(codes 305, 405) (red)	2	---- ---	---- ---	---- ---	2273 004	
	(code 404) (black)	2	---- ---	---- ---	---- ---	2083 862	
	(code 401)	1	---- ---	---- ---	---- ---	---- ---	2132 110-1
	(code 404)	1	---- ---	---- ---	---- ---	---- ---	2132 112-3
	(code 405)	1	---- ---	---- ---	---- ---	---- ---	2132 114-5
23-76-80	NUT, Quarter Arm Rest to Panel						
	L1-H, L1-P, D1	4	1280 134	---- ---	---- ---	1280 134	
23-76-86	COVER, Rear Quarter Arm Rest						
	D3-L						
	(code 401)	1	---- ---	---- ---	---- ---	---- ---	2132 116-7
	(code 404)	1	---- ---	---- ---	---- ---	---- ---	2132 118-9
	(code 405)	1	---- ---	---- ---	---- ---	---- ---	2132 120-1
23-77-3	ASSIST STRAP						
	L1, D1						
	(codes 694, 894) (gray)	2	2274 841				
	(screw)	2	6022 072				
23-77-17	SPACER, Assist Strap						
	L1, D1	2	2292 201				
23-79-3	CARPET, Front Floor						
	L1-L, L1-H, L1-P						
	(codes 611, 614, 615, 635, 641, 644, 645, 655, 675) (black)	1	2274 872	---- ---	2274 872	2274 872	
	(codes 631, 671) (blue)	1	2274 869	---- ---	2274 869		
	(code 632) (green)	1	2274 871	---- ---	2274 871		
	(code 633) (cordovan)	1	2274 870	---- ---	2274 870		
	(code 651) (blue)	1	---- ---	---- ---	---- ---	2297 201	
	(code 652) (green)	1	---- ---	---- ---	---- ---	2297 202	
	(code 653) (cordovan)	1	---- ---	---- ---	---- ---	2297 203	
	(code 655) (red)	1	---- ---	---- ---	---- ---	2297 219	

★ Indicates use as required.
B Indicates parts not listed in any previous parts book.
March 8, 1963 Supersedes May 1, 1962.

Printed in U.S.A.
Prices and specifications subject to change without notice.
Right and left part numbers are on same line, first number is right, second number is left.
* Indicates change or addition.

MyMopar.com

CODE	REMARKS	PER CAR	SED.	SP. 4 D.	SUB.	SP. CL. CP.	CV. CP.
23-79-3	CARPET, Front Floor - Cont'd						
	D1-H, D2-H						
	(codes 721,811,841,851)(blue)	1	2273 063	2273 063	2273 063	2273 063	2273 063
	(codes 722, 812, 852) (green)	1	2273 064	2273 064	2273 064	2273 064	2273 064
	(codes 723, 813, 853)(cordovan)	1	2273 065	2273 065	2273 065	2273 065	2273 065
	(codes 724, 725, 814, 815, 844, 856) (black)	1	2273 066	2273 066	2273 066	2273 066	2273 066
	(code 855) (red)	1	---- ---	---- ---	---- ---	2297 245	2297 245
	D3-L						
	(codes 301, 341, 401) (blue)	1	*2177 015	*2177 015	---- ---	*2177 015	*2177 015
	(codes 303, 343, 403)(cordovan)	1	*2177 016	*2177 016	*2177 016	*2177 016	
	(codes 304, 305, 344, 345, 404, 405) (black)	1	*2177 017	*2177 017	*2177 017	*2177 017	*2177 017
23-79-33	CARPET, Rear Floor						
	L1-L, L1-H,						
	(black)	1	*2249 368	---- ---	*2249 368	*2249 368	
	(blue)	1	*2272 130	---- ---	*2272 130	*2272 130	
	(green)	1	*2274 832	---- ---	*2274 832	*2274 832	
	(cordovan)	1	*2272 131	---- ---	*2272 131	*2272 131	
	L1-P						
	(blue)	1	---- ---	---- ---	---- ---	⊟2297 207	
	(green)	1	---- ---	---- ---	---- ---	⊟2297 208	
	(cordovan)	1	---- ---	---- ---	---- ---	⊟2297 209	
	(red)	1	---- ---	---- ---	---- ---	⊟2297 222	
	D1-H, D2-H						
	(codes 721, 811, 841, 851) (blue)	1	2273 076	2273 076	2273 076	2273 076	2273 076
	(codes 722, 812, 852) (green)	1	2273 077	2273 077	2273 077	2273 077	
	(codes 723, 813, 853)(cordovan)	1	2273 078	2273 078	2273 078	2273 078	2273 078
	(codes 724, 725, 814, 815, 844, 856) (black)	1	2273 079	2273 079	2273 079	2273 079	2273 079
	(code 855) (red)	1	---- ---	---- ---	---- ---	2297 255	2297 255
	D3-L						
	(blue)	1	*2176 669	*2176 669	---- ---	*2176 673	*2176 673
	(cordovan)	1	*2176 670	*2176 670	*2178 617	*2176 674	
	(black)	1	*2175 494	*2175 494	*2211 837	*2175 494	*2175 494
	D3-L						
	(codes 403, 404, 405)						
	(axle, kick-up rear panel) (black)	1	---- ---	---- ---	2169 953		
	(second seat to rear floor pan insert) (gray)	1	---- ---	---- ---	2169 950		
	(rear floor pan insert) (gray)	1	---- ---	---- ---	2169 951		
	Center Floor Pan						
	D1, D2, (vinoleum)						
	(codes 711, 801, 811) (blue)	1	---- ---	---- ---	2272 406		
	(codes 713, 803, 813)(cordovan)	1	---- ---	---- ---	2272 408		
	(codes 714, 715, 804, 814, 815) (gray)	1	---- ---	---- ---	2272 409		
	(codes 715, 815) (red)	1	---- ---	---- ---	2297 274		
	(code 812) (green)	1	---- ---	---- ---	2272 407		
	Rear Floor Pan						
	D1, D2, (vinoleum)						
	(codes 711, 801, 811) (blue)	1	---- ---	---- ---	2272 410		
	(codes 713, 803, 813)(cordovan)	1	---- ---	---- ---	2272 412		
	(codes 714, 715, 804, 814, 815) (gray)	1	---- ---	---- ---	2272 413		
	(codes 715, 815) (red)	1	---- ---	---- ---	2297 275		
	(code 812) (green)	1	---- ---	---- ---	2272 411		

★ Indicates use as required.
⊟ Indicates parts not listed in any previous parts book.
Right and left part numbers are on same line, first number is right, second number is left.
* Indicates change or addition.

Printed in U.S.A.
Prices and specifications subject to change without notice.
March 8, 1963 Supersedes May 1, 1962.

MyMopar.com

CODE	REMARKS	PER CAR	SED.	SP. 4 D.	SUB.	SP. CL. CP.	CV. CP.
23-79-33	CARPET, Rear Floor - Cont'd						
	Rear Floor Cover Panel						
	D1, D2, (vinoleum)						
	(w/2 seater only)						
	(codes 711, 801, 811)(blue)	1	---- ---	---- ---	*2272 414		
	(codes 713, 803, 813)(cordovan)	1	---- ---	---- ---	2272 416		
	(codes 714, 715, 804, 814, 815) (gray)	1	---- ---	---- ---	2272 417		
	(codes 715, 815) (red)	1	---- ---	---- ---	2297 276		
	(code 812) (green)	1	---- ---	---- ---	2272 415		
	D1, D2						
	Floor Pan Axle Kick-up Front Trim Panel						
	(embossed cardboard)						
	(paint as required)	1	---- ---	---- ---	*2249 857		
23-79-62	INSERT, Second Seat Cushion Panel						
	D3-L						
	(codes 403, 404, 405) (gray)	1	---- ---	---- ---	2169 946		
23-79-79	COVER, Tailgate Inside Panel						
	D1, D2, (vinoleum)						
	(codes 711, 801, 811) (blue)	1	---- ---	---- ---	2273 045		
	(codes 713, 803, 813)(cordovan)	1	---- ---	---- ---	2273 047		
	(codes 714, 715, 804, 814) (gray)	1	---- ---	---- ---	2273 048		
	(codes 715, 815) (red)	1	---- ---	---- ---	2297 271		
	(code 812) (green)	1	---- ---	---- ---	2273 046		
	D3-L (insert)						
	(codes 403, 404, 405) (gray)	1	---- ---	---- ---	2169 952		
23-81-3	HANDLE, Rear Door Pull-To						
	L1-L, D1, D2	1	1697 413				
23-81-8	SPACER, Rear Door Pull-To Handle						
	L1-L, D1, D2	2	1964 579				
23-82-30	HOOK, Coat Hanger						
	L1-H, L1-P	2	2083 292	---- ---	2083 292	2083 292	
	D1, D2, D3-L	2	2165 837	2165 837	2165 837	2165 837	
23-82-39	BRACKET, Coat Hook Support (soft headlining)						
	D3-L	2	1964 072	1963 287	---- ---	1963 287	
23-84-3	PAD, Instrument Panel Trim						
	L1-L, L1-H, L1-P						
	(codes 611, 631, 641, 651, 671) (blue)	1	2272 147	---- ---	2272 147	2272 147	
	(codes 614, 644, 664) (gray)	1	2272 149	---- ---	2272 149		
	(codes 615, 635, 645, 655, 675) (red)	1	2272 150	---- ---	2272 150	2272 150	
	(codes 632, 652) (green)	1	2274 950	---- ---	2274 950	2274 950	
	(codes 633, 653) (cocoa)	1	2272 148	---- ---	2272 148	2272 148	
	(attaching clip)	3	6008 193	6008 193	6008 193	6008 193	
	D1, D2, LHD.						
	(codes 701, 711, 721, 801, 811, 821, 831, 841, 851) (blue)	1	2272 050	2272 050	2272 050	2272 050	2272 050
	(codes 703, 713, 723, 803, 813, 853) (cocoa)	1	2272 052	2272 052	2272 052	2272 052	2272 052

★ Indicates use as required.
⊟ Indicates parts not listed in any previous parts book.
March 8, 1963 Supersedes May 1, 1962.

Printed in U.S.A.
Prices and specifications subject to change without notice.
Right and left part numbers are on same line, first number is right, second number is left.
* Indicates change or addition.

MyMopar.com

CODE	REMARKS	PER CAR	SED.	SP. 4 D.	SUB.	SP. CL. CP.	CV. CP.
23-84-3	PAD, Instrument Panel Trim - Cont'd						
	D1-L, L1-H, L1-P						
	(codes 704, 714, 724, 804, 814, 824, 834, 844, 894) (gray)	1	2272 053	2272 053	2272 053	2272 053	2272 053
	(codes 712, 722, 812, 852) (green)	1	2272 051	2272 051	2272 051	2272 051	2272 051
	(codes 715, 725, 815, 855)(red)	1	2272 054	2272 054	2272 054	2272 054	2272 054
	(code 856) (black)	1	---- ---	---- ---	---- ---	2297 071	2297 071
	D1, D2, RHD.						
	(codes 714, 724, 834, 844) (gray)	1	2249 713				
	D3-L						
	(codes 301, 341, 401) (blue)	1	*2180 134	*2180 134	---- ---	*2180 134	*2180 134
	(codes 303, 343, 403) (cocoa)	1	*2180 135	*2180 135	*2180 135	*2180 135	
	(codes 304, 344, 404) (black)	1	*2172 126	*2172 126	*2172 126	*2172 126	*2172 126
	(codes 305, 345, 405) (red)	1	*2172 127	*2172 127	*2172 127	*2172 127	*2172 127
	(attaching clip)	★	6008 222	6008 222	6008 222	6008 222	6008 222
23-86-3	HEADLINING and LISTINGS						
	L1-L						
	(codes 611, 614, 615, 641, 644, 645, 664, 694) (gray)	1	*2411 020	---- ---	⊟2411 028		
	L1-H (cloth)						
	(code 631)	1	*2246 675	---- ---	*2246 681		
	(code 632)	1	*2274 333	---- ---	*2274 335		
	(code 633)	1	⊟2411 023	---- ---	*2246 682		
	(code 635)	1	*2246 674	---- ---	*2246 680		
	(code 675)	1	*2293 586				
	L1-H (vinyl)						
	(code 631)	1	*2411 021	---- ---	*2411 029		
	(code 632)	1	*2411 022	---- ---	*2411 030		
	(code 633)	1	*2411 023	---- ---	*2411 031		
	(code 635)	1	*2411 020				
	(code 671)	1	*2293 587				
	(code 675)	1	*2411 020				
	L1-P						
	(code 651)	1	---- ---	---- ---	---- ---	*2296 251	
	(code 652)	1	---- ---	---- ---	---- ---	*2296 252	
	(code 653)	1	---- ---	---- ---	---- ---	*2296 253	
	(code 655)	1	---- ---	---- ---	---- ---	*2296 021	
	D1, D2						
	(codes 701, 711, 721)	1	2274 155				
	(codes 703, 713, 723)	1	2274 157				
	(codes 704, 714, 715, 724, 725, 894)	1	*2274 158				
	(codes 712, 722)	1	2274 156				
	(codes 821, 831, 841)	1	2274 163				
	(codes 824, 834, 844, 894)	1	2274 164				
	D1-L, D2-L, D1-M, D2-M (perf. hardboard)						
	(No. 1)	1	---- ---	---- ---	2273 461	2274 710	
	(No. 2)	1	---- ---	---- ---	2273 462	2274 711	
	(No. 3)	1	---- ---	---- ---	2273 463	2274 712	
	(No. 4)	1	---- ---	---- ---	2273 464	2274 713	
	(No. 5)	1	---- ---	---- ---	2273 465		
	(No. 6)	1	---- ---	---- ---	2273 466		
	(No. 7)	1	---- ---	---- ---	2273 467		

★ Indicates use as required.
⊟ Indicates parts not listed in any previous parts book.
Right and left part numbers are on same line, first number is right, second number is left.
* Indicates change or addition.

Printed in U.S.A.
Prices and specifications subject to change without notice.
March 8, 1963 Supersedes May 1, 1962.

MyMopar.com

CODE	REMARKS	PER CAR	SED.	SP. 4 D.	SUB.	SP. CL. CP.	CV. CP.
23-86-3	HEADLINING and LISTINGS-Cont'd						
	D1-H, D2-H (polyfoam) (No. 1)	1	---- ---	2274 714	2274 882	2274 714	
	(No. 2)	1	---- ---	2274 715	2274 883	2274 715	
	(No. 3)	1	---- ---	2274 716	2274 884	2274 716	
	(No. 4)	1	---- ---	2274 717	2274 885	2274 717	
	(No. 5)	1	---- ---	---- ---	2274 886		
	(No. 6)	1	---- ---	---- ---	2274 887		
	(No. 7)	1	---- ---	---- ---	*2274 888		
	D2-P (No. 1)	1	---- ---	---- ---	---- ---	2297 041	
	(No. 2)	1	---- ---	---- ---	---- ---	2297 042	
	(No. 3)	1	---- ---	---- ---	---- ---	2297 043	
	(No. 4)	1	---- ---	---- ---	---- ---	2297 044	
	D3-L						
	(codes 301, 341)	1	*2132 632	*2132 645	---- ---	*2132 661	
	(codes 303, 343)	1	*2132 633	*2132 646	---- ---	*2132 662	
	(codes 304, 344)	1	*2132 634	*2132 648	---- ---	*2132 663	
	(codes 305, 345)	1	*2132 635	*2132 649	---- ---	*2132 664	
	(code 404)	1	---- ---	2132 648	---- ---	2132 663	
	(code 405)	1	---- ---	2132 649	---- ---	2132 664	
	D3-L						
	(codes 403, 404, 405) (No. 1)	1	---- ---	---- ---	2176 825		
	(No. 2)	1	---- ---	---- ---	2176 826		
	(No. 3)	1	---- ---	---- ---	2176 827		
	(No. 4)	1	---- ---	---- ---	2176 828		
	(No. 5)	1	---- ---	---- ---	2176 829		
	(No. 6)	1	---- ---	---- ---	2176 830		
	(No. 7)	1	---- ---	---- ---	2176 831		
23-86-10	BOW, Headlining and Listing						
	L1 (No. 1)	1	2243 534	---- ---	2243 534		
	(No. 2)	1	---- ---	---- ---	2243 656		
	(No. 3)	1	---- ---	---- ---	2243 657		
	D1, D2 (No. 1)	1	2166 267	2166 267	2166 267	2166 267	
	(No. 2)	1	2166 268	2166 268	2166 268	2166 268	
	(No. 3)	1	---- ---	---- ---	2166 269		
	(No. 4)	1	---- ---	---- ---	2166 269		
	D3-L						
	(No. 1)	1	1954 682	1954 682	1954 682	1954 682	
	(No. 2)	1	1963 606	1963 606	1961 243	2162 219	
	(No. 3)	1	---- ---	---- ---	1961 244		
	(No. 4)	1	---- ---	---- ---	1961 244		
23-86-16	SUPPORT, Roof Inside Finish Panel on Roof Rail						
	D1, D2, D2-P	12	---- ---	2216 461	---- ---	2216 461	
	Fastener	12	---- ---	6000 922	---- ---	6000 922	
23-86-19	STRIP, Headlining Retaining						
	L1-H (w/depressions) Front	1	2082 504-5	---- ---	2082 504-5		
	(w/o depressions) Front	1	2259 196-7	---- ---	2259 196-7		
	D1, D2 Front	1	2167 228-9				
	Rear	1	2254 566-7				
	Side Front	1	---- ---	---- ---	2251 806-7		
	Side Rear	1	---- ---	---- ---	2251 446-7		
	Rear	1	---- ---	---- ---	2251 448		
	Corner Rear	1	---- ---	---- ---	2251 444-5		
	D3-L (low window)	1	1954 804-5				

★ Indicates use as required.
⊟ Indicates parts not listed in any previous parts book.
March 8, 1963 Supersedes May 1, 1962.

Printed in U.S.A.
Prices and specifications subject to change without notice.
Right and left part numbers are on same line, first number is right, second number is left.
* Indicates change or addition.

MyMopar.com

CODE	REMARKS	PER CAR	SED.	SP. 4 D.	SUB.	SP. CL. CP.	CV. CP.
23-86-24	RETAINER, Roof Inside Finish Panel						
	D1, D2 (No. 1)	1	---- ---	2162 893	2292 162	2162 893	
	(No. 2)	1	---- ---	2162 894	2292 163	2162 894	
	(No. 3)	1	---- ---	2162 895	2292 164	2162 895	
	(No. 4)	1	---- ---	---- ---	2292 165		
	(No. 5)	1	---- ---	---- ---	2292 166		
	(No. 6)	1	---- ---	---- ---	2292 167		
	D3-L (No. 1)	1	---- ---	---- ---	*2086 143		
	(No. 2)	1	---- ---	---- ---	*2086 142		
	(No. 3)	1	---- ---	---- ---	*2086 145		
	(No. 4)	1	---- ---	---- ---	*2086 146		
	(No. 5)	1	---- ---	---- ---	*2086 146		
	(No. 6)	1	---- ---	---- ---	*2086 148		
23-86-35	MOULDING, Roof Inside Finish Panel						
	D1-L, D2-L, D1-M, D2-M	★	---- ---	---- ---	2292 377	2292 377	
	D1-H, D2-H, D2-P (No. 1)	1	---- ---	2292 372	1905 449	2292 372	
	(No. 2)	1	---- ---	2292 374	1905 449	2292 374	
	(No. 3)	1	---- ---	2292 376	1905 449	2292 376	
	(No. 4 thru No. 6)	1	---- ---	---- ---	1905 449		
	D3-L (No. 1)	1	---- ---	*1757 559	---- ---	*2080 398	
	(No. 2)	1	---- ---	*1757 559	---- ---	*2080 399	
	(No. 3)	1	---- ---	*1954 782	---- ---	*2080 400	
	(No. 1 thru 4)	1	---- ---	---- ---	*1905 449		
	(No. 5)	1	---- ---	---- ---	*1759 686		
	(No. 6)	1	---- ---	---- ---	*1905 449		
23-86-36	CAP, Roof Inside Finish Moulding						
	D1-L, D2-L, D1-M, D2-M	12	---- ---	---- ---	1759 635		
	D1-H, D2-H	12	---- ---	---- ---	1759 636		
	D1, D2, (side retainer)	1	---- ---	---- ---	2251 808-9		
	D3-L	12	---- ---	---- ---	*1759 636		
23-91-6	PANEL, Cowl Trim (paint as required)						
	L1-L, L1-H, L1-P	1	2272 026-7	---- ---	2272 026-7	2272 026-7	
	D1, D2 (codes 701, 711, 721, 801, 811, 821, 831, 841, 851, 861) (blue)	1	*2272 208-9	*2272 208-9	*2272 208-9	*2272 208-9	*2272 208-9
	(codes 703, 713, 723, 803, 813, 853, 863) (cocoa)	1	*2272 210-1	*2272 210-1	*2272 210-1	*2272 210-1	*2272 210-1
	(codes 704, 714, 724, 804, 814, 824, 834, 844, 894) (gray)	1	2272 212-3	2272 212-3	2272 212-3	2272 212-3	2272 212-3
	(codes 712, 722, 812, 852) (green)	1	2272 214-5	2272 214-5	2272 214-5	2272 214-5	*2272 214-5
	(codes 715, 725, 815, 855, 865) (red)	1	*2272 216-7	*2272 216-7	*2272 216-7	*2272 216-7	*2272 216-7
	(code 856) (black)	1	---- ---	---- ---	---- ---	2297 154-5	2297 154-5
	D3-L (primed)	1	*2086 612-3	*2086 612-3	*2086 612-3	*2086 612-3	*2086 612-3
	(screw and seal)	1	*6023 388	*6023 388	*6023 388	*6023 388	*6023 388
23-92-5	PANEL, Door Trim						
	L1-L (2 D.) (codes 611, 614, 615)	1	2246 514-5				
	L1-L (4 D.) (codes 611, 614, 615, 644, 645) Front	1	2246 508-9	---- ---	2246 508-9		
	Rear	1	2246 510-1	---- ---	2246 510-1		

★ Indicates use as required.
⊟ Indicates parts not listed in any previous parts book.
Right and left part numbers are on same line, first number is right, second number is left.
* Indicates change or addition.

Printed in U.S.A.
Prices and specifications subject to change without notice.
May 1, 1962 Supersedes Nov. 30, 1961.

MyMopar.com

CODE	REMARKS		PER CAR	SED.	SP. 4 D.	SUB.	SP. CL. CP.	CV. CP.
23-92-5	PANEL, Door Trim - Cont'd							
	L1-L (4 D.)							
	(code 694)	Front	1	2251 002-3				
		Rear	1	2251 004-5				
	(code 664)	Front	1	2272 440-1				
		Rear	1	2272 442-3				
	L1-H (2 D.)							
	(code 631)		1	2274 934-5				
	(code 632)		1	2274 942-3				
	(code 633)		1	2274 936-7				
	(code 635)		1	2274 938-9				
	L1-H (4 D.)							
	(code 631)	Front	1	2272 456-7	---- ---	2272 456-7		
		Rear	1	2272 462-3	---- ---	2272 462-3		
	(code 632)	Front	1	2274 944-5	---- ---	2274 944-5		
		Rear	1	2274 946-7	---- ---	2274 946-7		
	(code 633)	Front	1	2272 458-9	---- ---	2272 458-9		
		Rear	1	2272 464-5	---- ---	2272 464-5		
	(code 635)	Front	1	2272 460-1	---- ---	2272 460-1		
		Rear	1	2272 466-7	---- ---	2272 466-7		
	(code 671)	Front	1	2272 444-5				
		Rear	1	2272 450-1				
	(code 675)	Front	1	2272 448-9				
		Rear	1	2272 454-5				
	L1-P							
	(code 651)		1	---- ---	---- ---	---- ---	2274 978-9	
	(code 652)		1	---- ---	---- ---	---- ---	2274 980-1	
	(code 653)		1	---- ---	---- ---	---- ---	2274 982-3	
	(code 655)		1	---- ---	---- ---	---- ---	2274 984-5	
	D1-L, D2-L, (2 D.)							
	(code 701)		1	2272 372-3				
	(code 703)		1	2272 374-5				
	(code 704)		1	2272 376-7				
	(code 894)		1	2273 482-3				
	D1-L, D2-L, (4 D.)							
	(codes 701, 801, 821)	Front	1	2272 356-7	---- ---	2272 356-7		
		Rear	1	2272 362-3	---- ---	2272 362-3		
	(codes 703, 803)	Front	1	2272 358-9	---- ---	2272 358-9		
		Rear	1	2272 364-5	---- ---	2272 364-5		
	(codes 704, 804, 824)	Front	1	2272 360-1	---- ---	2272 360-1		
		Rear	1	2272 366-7	---- ---	2272 366-7		
	(code 894)	Front	1	2273 486-7				
		Rear	1	2273 488-9				
	D1-M, D2-M, (2 D.)							
	(code 711)		1	2272 320-1	---- ---	---- ---	2272 328-9	
	(code 712)		1	2272 322-3				
	(code 713)		1	2272 324-5	---- ---	---- ---	2272 330-1	
	(code 714)		1	2272 326-7	---- ---	---- ---	2272 332-3	
	(code 715)		1	---- ---	---- ---	---- ---	2272 334-5	
	D1-M, D2-M, (4 D.)							
	(codes 711, 831, 861)	Front	1	*2272 292-3	---- ---	*2272 292-3		
		Rear	1	2272 302-3	---- ---	2272 302-3		
	(code 712)	Front	1	2272 294-5				
		Rear	1	2272 304-5				
	(code 713)	Front	1	2272 296-7	---- ---	2272 296-7		
		Rear	1	2272 306-7	---- ---	2272 306-7		
	(codes 714, 834)	Front	1	2272 298-9	---- ---	2272 298-9		
		Rear	1	2272 308-9	---- ---	2272 308-9		
	(codes 715, 865)	Front	1	*2272 300-1	---- ---	*2272 300-1		
		Rear	1	2272 310-1	---- ---	2272 310-1		

★ Indicates use as required.
⊟ Indicates parts not listed in any previous parts book.
March 8, 1963 Supersedes May 1, 1962.

Printed in U.S.A.
Prices and specifications subject to change without notice.
Right and left part numbers are on same line, first number is right, second number is left.
* Indicates change or addition.

MyMopar.com

CODE	REMARKS		PER CAR	SED.	SP. 4 D.	SUB.	SP. CL. CP.	CV. CP.
23-92-5	PANEL, Door Trim - Cont'd D1-H, D2-H, D2-P							
	(codes 721, 811, 841)	Front	1	*2272 194-5	*2272 168-9	*2272 194-5	*2272 256-7	*2272 256-7
		Rear	1	2272 230-1	2272 178-9	2272 230-1		
	(codes 722, 812)	Front	1	2272 196-7	2274 772-3	2272 196-7	2274 770-1	2274 770-1
		Rear	1	2272 232-3	2274 774-5	2272 232-3		
	(codes 723, 813)	Front	1	2272 198-9	2272 170-1	2272 198-9	2272 258-9	2272 258-9
		Rear	1	2272 234-5	2272 180-1	2272 234-5		
	(codes 724, 814, 844)	Front	1	2272 200-1	2272 172-3	2272 200-1	2272 260-1	2272 260-1
		Rear	1	2272 236-7	2272 182-3	2272 236-7		
	(codes 725, 815)	Front	1	2272 202-3	2272 174-5	2272 202-3	2272 262-3	2272 262-3
		Rear	1	2272 238-9	2272 184-5	2272 238-9		
	D2-P							
	(code 851)		1	---- ---	---- ---	---- ---	2297 110-1	2297 110-1
	(code 852)		1	---- ---	---- ---	---- ---	2297 112-3	2297 112-3
	(code 853)		1	---- ---	---- ---	---- ---	2297 114-5	2297 114-5
	(code 855)		1	---- ---	---- ---	---- ---	2297 116-7	2297 116-7
	(code 856)		1	---- ---	---- ---	---- ---	2297 118-9	2297 118-9
	D3-L							
	(codes 301, 341)	Front	1	*2177 022-3	*2177 042-3	---- ---	*2177 062-3	
		Rear	1	2177 024-5	2177 044-5			
	(codes 303, 343)	Front	1	*2177 027-8	*2177 047-8	---- ---	*2177 067-8	
		Rear	1	2177 029-30	2177 049-50			
	(codes 304, 344)	Front	1	*2177 032-3	*2177 052-3	---- ---	*2177 072-3	
		Rear	1	2177 034-5	2177 054-5			
	(codes 305, 345)	Front	1	*2177 037-8	*2177 057-8	---- ---	*2177 077-8	
		Rear	1	2177 039-40	2177 059-60			
	(code 401)	Front	1	---- ---	---- ---	---- ---	2177 062-3	2177 062-3
	(code 403)	Front	1	---- ---	2177 047-8	2177 047-8		
		Rear	1	---- ---	2177 049-50	2177 049-50		
	(code 404)	Front	1	---- ---	2177 557-8	2177 557-8	2177 565-6	2177 565-6
		Rear	1	---- ---	2177 559-60	2177 559-60		
	(code 405)	Front	1	---- ---	2177 057-8	2177 057-8	2177 077-8	2177 077-8
		Rear	1	---- ---	2177 059-60	2177 059-60		
23-92-8	FASTENER, Quarter, Front or Rear Trim Panel D3-L		★	975 633	975 633	975 633	975 633	975 633
23-96-3	PANEL, Luggage Compartment Front Lining							
	L1		1	2083 227	---- ---	---- ---	2083 227	
	D1, D2		1	2162 831	2162 831	---- ---	2162 831	
	(side to quarter)	(filler)	1	2292 876-7	---- ---	---- ---	2292 876-7	
	D3-L	(black)	1	2178 600	2178 600	---- ---	2178 825	2178 399
23-96-8	COVER, Inner Wheelhouse Panel L1-H							
	(code 631)	(blue)	1	---- ---	---- ---	2272 106-7		
	(code 632)	(green)	1	---- ---	---- ---	2274 816-7		
	(code 633)	(cocoa)	1	---- ---	---- ---	2272 108-9		
	(code 635)	(red)	1	---- ---	---- ---	2272 112-3		
	(paint as required)							
	D1, D2	Side	1	2274 718-9	2274 718-9	---- ---	2274 718-9	2274 718-9
	(2 seat)		1	---- ---	---- ---	2273 348-9		
	(3 seat)	Right	1	---- ---	---- ---	*2297 516		
	(3 seat)	Left	1	---- ---	---- ---	⊟2432 313		
	(3 seat) (rear extension)		1	---- ---	---- ---	2273 358-9		
		Side Front	1	---- ---	---- ---	---- ---	---- ---	2249 700-1
		Side Rear	1	---- ---	---- ---	---- ---	---- ---	2274 878-9

★ Indicates use as required.
⊟ Indicates parts not listed in any previous parts book.
Right and left part numbers are on same line, first number is right, second number is left.
* Indicates change or addition.

Printed in U.S.A.
Prices and specifications subject to change without notice.
March 8, 1963 Supersedes May 1, 1962.

MyMopar.com

CODE	REMARKS	PER CAR	SED.	SP. 4 D.	SUB.	SP. CL. CP.	CV. CP.
23-96-8	COVER, Inner Wheelhouse Panel-Cont'd						
	D3-L						
	(panel and extension) (black)	1	2177 901-2	2177 901-2	---- ---	2177 901-2	
	(cocoa)	1	---- ---	---- ---	2178 649-50		
	(upper) (black)	1	---- ---	---- ---	2169 553-4		
	(upper) (red)	1	---- ---	---- ---	2177 004-5		
	(deck lid hinge cover) (black)	1	---- ---	---- ---	---- ---	---- ---	*2177 907-8
23-96-9	CLIP, Luggage Compartment Side Lining Panel Retaining						
	D1, D2, D3-L	★	*2165 272	*2165 272	---- ---	*2165 272	*2165 272
	(deck lid hinge)	1	---- ---	---- ---	---- ---	---- ---	2411 668-9
	(lining panel attach. clip)	6	6001 401	6001 401	---- ---	6001 401	6001 401
	(side lining to hinge plate fastener)	2	6000 903	6000 903	---- ---	6000 903	6000 903
23-96-41	RETAINER, Wheelhouse and Lower Quarter Trim Cover (paint as required)						
	D1, D2, Upper Edge Plastic	6	---- ---	---- ---	2273 453		
	(screw)	4	---- ---	---- ---	188 973		
23-99-4	COVER, Center Pillar Trim (paint as required)						
	D1, D2	1	---- ---	*2273 422-3			
	D3-L	1	---- ---	*2176 637-8	*2176 637-8		
23-99-9	RETAINER, Body Lock Pillar Quarter Trim						
	D1, D2 Rear	1	---- ---	---- ---	2162 508-9		
23-99-38	PANEL, Rear Upper Pillar Reinforcement Trim (paint as required)						
	L1-L, L1-H	1	---- ---	---- ---	2272 060-1		
23-101-3	PANEL, Rear Quarter Trim (paint as required)						
	L1-L (2 D.)						
	(codes 611, 614, 615)	1	2246 516-7				
	L1-L (4 D.) (upper)	1	2272 046-7	---- ---	2272 046-7		
	(codes 611, 614, 615, 641, 644, 645) (lower)	1	2272 038-9	---- ---	2272 038-9		
	(code 694) (lower)	1	2251 092-3				
	(upper)	1	2293 438-9				
	L1-H, L1-P, (2 D.)						
	(codes 631, 651)	1	2274 928-9	---- ---	---- ---	2274 970-1	
	(codes 632, 652)	1	2274 940-1	---- ---	---- ---	2274 972-3	
	(codes 633, 653)	1	2274 930-1	---- ---	---- ---	2274 974-5	
	(codes 635, 655)	1	*2274 932-3	---- ---	---- ---	*2274 976-7	
	L1-H (4 D.) (upper)						
	(codes 631, 671)	1	2293 430-1	---- ---	2272 046-7		
	(code 632)	1	2293 432-3	---- ---	2272 046-7		
	(code 633)	1	2293 434-5	---- ---	2272 046-7		
	(codes 635, 675)	1	2293 440-1	---- ---	2272 046-7		
	L1-H (4 D.) (lower)	1	2272 038-9				
	D1-L, D2-L, (2 D.)						
	(code 701)	1	2272 378-9				
	(code 703)	1	2272 380-1				
	(code 704)	1	2272 382-3				
	(code 894)	1	2273 484-5				
	D1-M, D2-M, (2 D.)						
	(code 711)	1	2272 336-7	---- ---	---- ---	2272 344-5	
	(code 712)	1	2272 338-9				
	(code 713)	1	2272 340-1	---- ---	---- ---	2272 346-7	
	(code 714)	1	2272 342-3	---- ---	---- ---	2272 348-9	
	(code 715)	1	---- ---	---- ---	---- ---	2272 350-1	

★ Indicates use as required.
⊟ Indicates parts not listed in any previous parts book.
March 8, 1963 Supersedes May 1, 1962.

Printed in U.S.A.
Prices and specifications subject to change without notice.
Right and left part numbers are on same line, first number is right, second number is left.
* Indicates change or addition.

MyMopar.com

CODE	REMARKS	PER CAR	SED.	SP. 4 D.	SUB.	SP. CL. CP.	CV. CP.
23-101-3	PANEL, Rear Quarter Trim-Cont'd						
	D1, D2, (4D.)						
	(codes 701, 711, 721, 811, 821, 831, 841) Upper	1	2411 042-3	2411 042-3			
	Lower	1	2411 052-3	2411 052-3			
	(codes 703, 713, 723, 813)						
	Upper	1	*2411 046-7	2411 046-7			
	Lower	1	2411 056-7	2411 056-7			
	(codes 704, 714, 724, 814, 824, 834, 844, 894) Upper	1	2411 048-9	2411 048-9			
	Lower	1	2411 058-9	2411 058-9			
	(codes 712, 722, 812) Upper	1	2411 044-5	2411 044-5			
	Lower	1	2411 054-5	2411 054-5			
	(codes 715, 725, 815) Upper	1	2411 050-1	*2411 050-1			
	Lower	1	2411 060-1	2411 060-1			
	D1-H, D2-H						
	(code 811)	1	---- ---	---- ---	---- ---	2272 266-7	2272 276-7
	(code 812)	1	---- ---	---- ---	---- ---	2274 768-9	2274 766-7
	(code 813)	1	---- ---	---- ---	---- ---	2272 268-9	2272 278-9
	(code 814)	1	---- ---	---- ---	---- ---	2272 270-1	2272 280-1
	(code 815)	1	---- ---	---- ---	---- ---	2272 272-3	2272 282-3
	D2-P						
	(code 851)	1	---- ---	---- ---	---- ---	2297 120-1	2297 130-1
	(code 852)	1	---- ---	---- ---	---- ---	2297 122-3	2297 132-3
	(code 853)	1	---- ---	---- ---	---- ---	2297 124-5	2297 134-5
	(code 855)	1	---- ---	---- ---	---- ---	2297 126-7	2297 136-7
	(code 856)	1	---- ---	---- ---	---- ---	2297 128-9	2297 138-9
	D3-L						
	(codes 301, 341)	1	*2132 248-9	*2132 302-3	---- ---	*2177 064-5	
	(codes 303, 343)	1	*2132 250-1	*2132 304-5	---- ---	*2177 069-70	
	(codes 304, 344)	1	*2132 252-3	*2132 306-7	---- ---	*2177 074-5	
	(codes 305, 345)	1	*2132 254-5	*2132 308-9	---- ---	*2177 079-80	
	(code 401)	1	---- ---	---- ---	---- ---	---- ---	2177 562-3
	(code 404)	1	---- ---	2132 466-7	---- ---	2178 382-3	2177 567-8
	(code 405)	1	---- ---	2132 308-9	---- ---	2177 079-80	2177 570-1
23-101-14	COVER, Upper, Quarter Front Trim						
	D1, D2 (paint as required)	1	---- ---	---- ---	2273 338-9		
23-101-26	STRIP, Quarter Trim Panel Retaining						
	D1, D2, (4D.)	1	2252 372-3				
	Screw	6	161 860				
23-101-32	SPACER, Rear Quarter Trim Panel to Inner Panel						
	D3-L	2	---- ---	---- ---	---- ---	---- ---	1964 348
23-102-3	PANEL, Shelf Trim (paint as required)						
	L1-L, L1-H, L1-P	1	2272 064	---- ---	---- ---	2272 064	
	D1, D2	1	2297 038	2297 038	---- ---	2297 038	
	D3-L (gray)	1	1974 843	1974 843			
	(black)	1	2174 648	2174 648	---- ---	2174 648	
	(extension) (black)	1	2173 047	2173 047	---- ---	2173 047	
	(fastener)	★	6000 903	6000 903	---- ---	6000 903	
23-103-3	PANEL, Visor Trim						
	L1-L						
	(codes 611, 614, 615, 641, 644, 645, 664)	2	2272 104	---- ---	2272 104		
	(padded)	2	2178 395	---- ---	2178 395		

★ Indicates use as required.
B Indicates parts not listed in any previous parts book.
Right and left part numbers are on same line, first number is right, second number is left.
* Indicates change or addition.

Printed in U.S.A.
Prices and specifications subject to change without notice.

March 8, 1963 Supersedes May 1, 1962.

MyMopar.com

CODE	REMARKS	PER CAR	SED.	SP. 4 D.	SUB.	SP. CL. CP.	CV. CP.
23-103-3	PANEL, Visor Trim - Cont'd						
	L1-H						
	(codes 631, 671) (blue)	2	2272 102	---- ---	2272 102		
	(code 632) (green)	2	2274 840	---- ---	2274 840		
	(code 633) (beige)	2	2272 103	---- ---	2272 103		
	(codes 635, 675) (gray)	2	2272 104	---- ---	2272 104		
	L1-P						
	(code 651) (blue)	2	---- ---	---- ---	---- ---	2297 162	
	(code 652) (green)	2	---- ---	---- ---	---- ---	2297 163	
	(code 653) (beige)	2	---- ---	---- ---	---- ---	2297 164	
	(code 655) (white)	2	---- ---	---- ---	---- ---	2274 998	
	D1, D2, (except D2-P)						
	(codes 701, 711, 721, 821, 831, 841) (blue)	2	2273 282				
	(codes 703, 713, 723) (beige)	2	2273 284				
	(codes 704, 714, 715, 724, 725, 824, 834, 844, 894) (gray)	2	2273 285				
	(codes 712, 722) (green)	2	2273 283				
	(padded) (white)	2	*2273 455	*2273 455	*2273 455	*2273 455	
	(codes 711, 713, 714, 715, 801, 803, 804) (white)	2	---- ---	2273 286	2273 286	2273 286	
	D1, D2, (except D2-P)						
	(codes 811, 812, 813, 814, 815) (white)	2	*2272 387	2272 387	2272 387	2272 387	
	(code 811) (blue)	2	---- ---	---- ---	---- ---	---- ---	2273 278
	(code 812) (green)	2	---- ---	---- ---	---- ---	---- ---	2274 647
	(code 813) (cocoa)	2	---- ---	---- ---	---- ---	---- ---	2273 279
	(code 814) (gray)	2	---- ---	---- ---	---- ---	---- ---	2273 280
	(code 815) (red)	2	---- ---	---- ---	---- ---	---- ---	2273 281
	D2-P	2	---- ---	---- ---	---- ---	2297 064	2297 066
	D3-L						
	(codes 301, 341) (blue)	2	*2178 301	*2178 301	---- ---	*2178 301	
	(code 302) (lime green)	2	2180 051	2180 051	---- ---	2180 051	
	(codes 303, 343) (beige)	2	*2178 302	*2178 302	---- ---	*2178 302	
	(codes 304, 344, 404) (gray)	2	*2178 304	*2178 304	---- ---	*2178 304	
	(codes 305, 345, 405) (red)	2	*2178 305	*2178 305	---- ---	*2178 305	
	(codes 403, 404, 405) (gray)	2	---- ---	---- ---	2178 304		
	(codes 403, 404, 405) (printed hardboard)	2	---- ---	---- ---	2179 401		
	(code 401) (blue)	2	---- ---	---- ---	---- ---	---- ---	2176 704
	(code 404) (black)	2	---- ---	---- ---	---- ---	---- ---	2174 277
	(code 405) (red)	2	---- ---	---- ---	---- ---	---- ---	2176 705
23-103-10	ARM and BRACKET, Visor						
	L1-L, L1-H	1	2082 676-7	---- ---	2082 676-7		
	L1-P (chrome)	1	---- ---	---- ---	---- ---	2292 380-1	
	D1, D2, (except D2-P)	1	2162 626-7	2162 626-7	2162 626-7	2162 626-7	2162 686-7
	D2-P (chrome)	1	---- ---	---- ---	---- ---	2292 894-5	2162 686-7
	D3-L	1	2292 108-9	2292 108-9	2292 108-9	2292 108-9	
		1	---- ---	---- ---	---- ---	---- ---	1954 926-7
23-103-18	WASHER, Visor Arm Tension						
	L1-H, D1, D2	2	6000 106	6000 106	6000 106	6000 106	6000 106
23-103-34	HOOK, Windshield Visor Support						
	D3-L	1	1964 262	1964 262	1964 262	1964 262	
		1	---- ---	---- ---	---- ---	---- ---	1964 332
23-103-37	SPACER, Windshield Visor Support Hook						
	D3-L	1	2165 039	2165 039	2165 039	2165 039	

★ Indicates use as required.
⊟ Indicates parts not listed in any previous parts book.
March 8, 1963 Supersedes May 1, 1962.

Printed in U.S.A.
Prices and specifications subject to change without notice.
Right and left part numbers are on same line, first number is right, second number is left.
* Indicates change or addition.

MyMopar.com

CODE	REMARKS	PER CAR	SED.	SP. 4 D.	SUB.	SP. CL. CP.	CV. CP.
23-103-48	SUPPORT, Visor Inner						
	D1, D2	2	2162 628	2162 628	2162 628	2162 628	2162 628
	D3-L	2	*2193 096	*2193 096	*2193 096	*2193 096	*2193 096
23-108-4	CUSHION, Front Seat						
	L1-L (2 D.)						
	(codes 611, 614, 615)	1	2272 616				
	(w/airfoam pad)	1	2296 622				
	(w/heavy duty spring)	1	2296 623				
	(w/heavy duty spring and airfoam pad)	1	2296 624				
	L1-L (4 D.)						
	(codes 611, 614, 615, 641, 644, 645)	1	2246 261	---- ---	2246 270		
	(w/airfoam pad)	1	2296 632	---- ---	2296 640		
	(w/heavy duty springs)	1	⊟2296 633	---- ---	⊟2296 639		
	(w/heavy duty springs and rubber pad)	1	⊟2296 634	---- ---	⊟2296 641		
	(code 664)	1	2274 276				
	(w/heavy duty spring)	1	2273 652				
	(code 694)	1	2274 325				
	(w/airfoam pad)	1	⊟2411 209				
	L1-H, L1-P, (2 D.)						
	(code 631)	1	2273 557				
	(w/airfoam pad)	1	2296 606				
	(code 632)	1	2296 006				
	(w/airfoam pad)	1	⊟2296 607				
	(code 633)	1	2273 558				
	(w/airfoam pad)	1	⊟2296 608				
	(code 635)	1	2296 579				
	(w/airfoam pad)	1	⊟2296 609				
	L1-H (4 D.)						
	(code 631)	1	2273 579	---- ---	2273 579		
	(w/airfoam pad)	1	2296 614	---- ---	2296 614		
	(code 632)	1	2296 028	---- ---	2296 028		
	(w/airfoam pad)	1	⊟2296 615	---- ---	⊟2296 615		
	(code 633)	1	2273 580	---- ---	2273 580		
	(w/airfoam pad)	1	⊟2296 616	---- ---	⊟2296 616		
	(code 635)	1	2296 595	---- ---	2296 595		
	(w/airfoam pad)	1	⊟2296 617	---- ---	⊟2296 617		
	(code 671)	1	2272 846				
	(w/airfoam pad)	1	⊟2411 217				
	(code 675)	1	2272 847				
	(w/airfoam pad)	1	⊟2411 219				
	L1-P						
	(code 651)	1	---- ---	---- ---	---- ---	2296 452-3	
	(code 652)	1	---- ---	---- ---	---- ---	2296 454-5	
	(code 653)	1	---- ---	---- ---	---- ---	2296 456-7	
	(code 655)	1	---- ---	---- ---	---- ---	2296 458-9	
	D1-L, D2-L, (2 D.)						
	(code 701)	1	2271 703				
	(w/airfoam pad)	1	2296 550				
	(w/heavy duty spring)	1	2296 128				
	(code 703)	1	2271 704				
	(w/airfoam pad)	1	2296 551				
	(w/heavy duty spring)	1	2296 129				
	(code 704)	1	2271 705				
	(w/airfoam pad)	1	2296 552				
	(w/heavy duty spring)	1	2296 130				

★ Indicates use as required.
⊟ Indicates parts not listed in any previous parts book.
Right and left part numbers are on same line, first number is right, second number is left.
* Indicates change or addition.

Printed in U.S.A.
Prices and specifications subject to change without notice.
May 1, 1962 Supersedes Nov. 30, 1961.

MyMopar.com

CODE	REMARKS	PER CAR	SED.	SP. 4 D.	SUB.	SP. CL. CP.	CV. CP.
23-108-4	CUSHION, Front Seat - Cont'd						
	D1-L, D2-L, (2 D.)						
	(code 894)	1	2293 652				
	(w/heavy duty spring)	1	2293 653				
	(w/airfoam pad)	1	2293 819				
	D1-L, D2-L, (4 D.)						
	(codes 701, 801)	1	2271 736	---- ---	2271 837		
	(w/airfoam pad)	1	2296 559	---- ---	2296 568		
	(w/heavy duty spring)	1	2296 179	---- ---	2296 161		
	(codes 703, 803)	1	2271 737	---- ---	2271 838		
	(w/airfoam pad)	1	2296 560	---- ---	2296 569		
	(w/heavy duty spring)	1	2296 180	---- ---	2296 162		
	(codes 704, 804)	1	2271 738	---- ---	2271 839		
	(w/airfoam pad)	1	2296 561	---- ---	2296 570		
	(w/heavy duty spring)	1	2296 181	---- ---	2296 163		
	(code 821)	1	2293 962				
	(w/airfoam pad)	1	2271 902				
	(code 824)	1	2293 963				
	(w/airfoam pad)	1	2271 903				
	(code 894)	1	2293 636				
	(w/heavy duty spring)	1	2293 637				
	(w/airfoam pad)	1	2293 826				
	D3-L						
	(code 301)	1	2131 493	2131 493	---- ---	2131 566	
	(w/elec. 6 way)	1	2131 529	2131 529	---- ---	2131 606	
	(w/airfoam pad)	1	2131 533	2131 533	---- ---	2131 610	
	(w/elec. 6 way and airfoam pad)	1	2131 537	2131 537	---- ---	2131 614	
	(code 303)	1	2131 494	2131 494	---- ---	2131 567	
	(w/elec. 6 way)	1	2131 530	2131 530	---- ---	2131 607	
	(w/airfoam pad)	1	2131 534	2131 534	---- ---	2131 611	
	(w/elec. 6 way and airfoam pad)	1	2131 538	2131 538	---- ---	2131 615	
	(code 304)	1	2131 495	2131 495	---- ---	2131 568	
	(w/elec. 6 way)	1	2131 531	2131 531	---- ---	2131 608	
	(w/airfoam pad)	1	2131 535	2131 535	---- ---	2131 612	
	(w/elec. 6 way and airfoam pad)	1	2131 539	2131 539	---- ---	2131 616	
	(code 305)	1	2131 496	2131 496	---- ---	2131 569	
	(w/elec. 6 way)	1	2131 532	2131 532	---- ---	2131 609	
	(w/airfoam pad)	1	2131 536	2131 536	---- ---	2131 613	
	(w/elec. 6 way and airfoam pad)	1	2131 540	2131 540	---- ---	2131 617	
	(code 341)	1	⊟2144 356	⊟2144 356	---- ---	⊟2144 332	
	(w/elec. 6 way)	1	⊟2144 368	⊟2144 368	---- ---	⊟2144 396	
	(w/airfoam pad)	1	⊟2144 380	⊟2144 380	---- ---	⊟2144 408	
	(w/elec. 6 way and airfoam pad)	1	⊟2144 388	⊟2144 388	---- ---	⊟2144 416	
	(code 343)	1	⊟2144 357	⊟2144 357	---- ---	⊟2144 333	
	(w/elec. 6 way)	1	⊟2144 369	⊟2144 369	---- ---	⊟2144 397	
	(w/airfoam pad)	1	⊟2144 381	⊟2144 381	---- ---	⊟2144 409	
	(w/elec. 6 way and airfoam pad)	1	⊟2144 389	⊟2144 389	---- ---	⊟2144 417	
	(code 344)	1	⊟2144 358	⊟2144 358	---- ---	⊟2144 334	
	(w/elec. 6 way)	1	⊟2144 370	⊟2144 370	---- ---	⊟2144 398	
	(w/airfoam pad)	1	⊟2144 382	⊟2144 382	---- ---	⊟2144 410	
	(w/elec. 6 way and airfoam pad)	1	⊟2144 390	⊟2144 390	---- ---	⊟2144 418	

★ Indicates use as required.
⊟ Indicates parts not listed in any previous parts book.
March 8, 1963 Supersedes May 1, 1962.

Printed in U.S.A.
Prices and specifications subject to change without notice.
Right and left part numbers are on same line, first number is right, second number is left.
* Indicates change or addition.

MyMopar.com

CODE	REMARKS	PER CAR	SED.	SP. 4 D.	SUB.	SP. CL. CP.	CV. CP.
23-108-4	CUSHION, Front Seat - Cont'd						
	D3-L						
	(code 345)	1	⊟2144 359	⊟2144 359	---- ---	⊟2144 335	
	(w/elec. 6 way)	1	⊟2144 371	⊟2144 371	---- ---	⊟2144 399	
	(w/airfoam pad)	1	⊟2144 383	⊟2144 383	---- ---	⊟2144 411	
	(w/elec. 6 way and airfoam pad)	1	⊟2144 391	⊟2144 391	---- ---	⊟2144 419	
	(code 404)	1	---- ---	2131 878			
	(w/6 way elec.)	1	---- ---	2131 899			
	(code 405)	1	---- ---	2131 879			
	(w/6 way elec.)	1	---- ---	2131 900			
	(code 403)	1	---- ---	---- ---	2132 590		
	(w/6 way elec.)	1	---- ---	---- ---	2132 601		
	(code 404)	1	---- ---	---- ---	2131 878	2131 929	2131 929
	(w/6 way elec.)	1	---- ---	---- ---	2131 899	2131 950	2131 950
	(code 405)	1	---- ---	---- ---	2131 879	2131 930	2131 930
	(w/6 way elec.)	1	---- ---	---- ---	2131 900	2131 951	2131 951
	(code 401)	1	---- ---	---- ---	---- ---	---- ---	2131 928
	(w/6 way elec.)	1	---- ---	---- ---	---- ---	---- ---	2131 949
	D1-M, D2-M (2 D.)						
	(code 711)	1	2271 755	---- ---	---- ---	2271 755	
	(w/heavy duty spring)	1	2296 230	---- ---	---- ---	2296 230	
	(code 712)	1	2271 756				
	(w/heavy duty spring)	1	2296 231				
	(code 713)	1	2271 757	---- ---	---- ---	2271 757	
	(w/heavy duty spring)	1	2296 232	---- ---	---- ---	2296 232	
	(code 714)	1	2271 758	---- ---	---- ---	2271 758	
	(w/heavy duty spring)	1	2296 233	---- ---	---- ---	2296 233	
	(code 715)	1	---- ---	---- ---	---- ---	2271 759	
	(w/heavy duty spring)	1	---- ---	---- ---	---- ---	2296 234	
	D1-M, D2-M, (4 D.)						
	(code 711)	1	2271 765	---- ---	2271 765		
	(w/heavy duty spring)	1	2296 200	---- ---	2296 200		
	(code 712)	1	2271 766				
	(w/heavy duty spring)	1	2296 201				
	(code 713)	1	2271 767	---- ---	2271 767		
	(w/heavy duty spring)	1	2296 202	---- ---	2296 202		
	(code 714)	1	2271 768	---- ---	2271 768		
	(w/heavy duty spring)	1	2296 203	---- ---	2296 203		
	(code 715)	1	2271 769	---- ---	2271 769		
	(w/heavy duty spring)	1	2296 204	---- ---	2296 204		
	(code 831)	1	2271 902				
	(code 834)	1	2271 903				
	(code 861)	1	---- ---	---- ---	⊟2415 818		
	(w/heavy duty spring)	1	---- ---	---- ---	2415 822		
	D1-H, D2-H						
	(codes 721, 811)	1	2293 105	2273 710	2273 710	2293 462	2293 462
	(w/elec. seat 6 way)	1	2293 110	2273 715	2273 715	2293 467	2293 467
	(codes 722, 812)	1	2293 106	2273 711	2273 711	2293 463	2293 463
	(w/elec. seat 6 way)	1	2293 111	2273 716	2273 716	2293 468	2293 468
	(codes 723, 813)	1	2293 107	2273 712	2273 712	2293 464	2293 464
	(w/elec. seat 6 way)	1	2293 112	2273 717	2273 717	2293 469	2293 469
	(codes 724, 814)	1	2293 108	2273 713	2273 713	2293 465	2293 465
	(w/elec. seat 6 way)	1	2293 113	2273 718	2273 718	2293 470	2293 470
	D1-H, D2-H						
	(codes 725, 815)	1	2293 109	2273 714	2273 714	2293 466	2293 466
	(w/elec. seat 6 way)	1	2293 114	2273 719	2273 719	2293 471	2293 471
	(code 841)	1	2271 902				
	(code 844)	1	2271 903				

★ Indicates use as required.
⊟ Indicates parts not listed in any previous parts book.
Right and left part numbers are on same line, first number is right, second number is left.
* Indicates change or addition.

Printed in U.S.A.
Prices and specifications subject to change without notice.
March 8, 1963 Supersedes May 1, 1962.

MyMopar.com

CODE	REMARKS	PER CAR	SED.	SP. 4 D.	SUB.	SP. CL. CP.	CV. CP.
23-108-4	CUSHION, Front Seat - Cont'd						
	D2-P						
	(code 851)	1	---- ---	---- ---	---- ---	2296 270-1	2296 270-1
	(code 852)	1	---- ---	---- ---	---- ---	2296 272-3	2296 272-3
	(code 853)	1	---- ---	---- ---	---- ---	2296 274-5	2296 274-5
	(code 855)	1	---- ---	---- ---	---- ---	2296 276-7	2296 276-7
	(code 856)	1	---- ---	---- ---	---- ---	2296 278-9	2296 278-9
23-108-5	COVER, Front Seat Cushion						
	L1-L (2 D.)						
	(codes 611, 614, 615)	1	2246 422				
	L1-L (4 D.)						
	(codes 611, 614, 615)	1	2246 260				
	(code 664)	1	2274 275				
	(code 694)	1	2274 324				
	(codes 641, 644, 645)	1	---- ---	---- ---	2246 269		
	L1-H (2 D.)						
	(code 631)	1	2273 554				
	(code 632)	1	2296 004				
	(code 633)	1	2273 555				
	(code 635)	1	2296 577				
	L1-H (4 D.)						
	(code 631)	1	2273 576	---- ---	2273 576		
	(code 632)	1	2296 027	---- ---	2296 027		
	(code 633)	1	2273 577	---- ---	2273 577		
	(code 635)	1	2296 593	---- ---	2273 578		
	(code 671)	1	2272 844				
	(code 675)	1	2272 845				
	L1-P						
	(code 651)	2	---- ---	---- ---	---- ---	2296 399	
	(code 652)	2	---- ---	---- ---	---- ---	2296 400	
	(code 653)	2	---- ---	---- ---	---- ---	2296 401	
	(code 655)	2	---- ---	---- ---	---- ---	2296 402	
	D1-L, D2-L, (2 D.)						
	(code 701)	1	2271 700				
	(code 703)	1	2271 701				
	(code 704)	1	2271 702				
	(code 894)	1	2293 651				
	D1-L, D2-L, (4 D.)						
	(codes 701, 801)	1	2271 733	---- ---	2271 834		
	(codes 703, 803)	1	2271 734	---- ---	2271 835		
	(codes 704, 804)	1	2271 735	---- ---	2271 836		
	(code 821)	1	2271 900				
	(code 824)	1	2271 901				
	(code 894)	1	2293 635				
	D3-L						
	(code 301)	1	2131 497	2131 497	---- ---	2131 570	
	(code 303)	1	2131 498	2131 498	---- ---	2131 571	
	(code 304)	1	2131 499	2131 499	---- ---	2131 572	
	(code 305)	1	2131 500	2131 500	---- ---	2131 573	
	(code 341)	1	*2144 292	*2144 292	---- ---	*2144 336	
	(code 343)	1	*2144 293	*2144 293	---- ---	*2144 337	
	(code 344)	1	*2144 294	*2144 294	---- ---	*2144 338	
	(code 345)	1	*2144 295	*2144 295	---- ---	*2144 339	
	(code 404)	1	---- ---	2131 881	2131 881	2131 932	2131 932
	(code 405)	1	---- ---	2131 882	2131 882	2131 933	2131 933
	(code 403)	1	---- ---	---- ---	2132 591		
	(code 401)	1	---- ---	---- ---	---- ---	---- ---	2131 931

★ Indicates use as required.
⊟ Indicates parts not listed in any previous parts book.
March 8, 1963 Supersedes May 1, 1962.

Printed in U.S.A.
Prices and specifications subject to change without notice.
Right and left part numbers are on same line, first number is right, second number is left.
* Indicates change or addition.

MyMopar.com

CODE	REMARKS	PER CAR	SED.	SP. 4 D.	SUB.	SP. CL. CP.	CV. CP.
23-108-5	COVER, Front Seat Cushion - Cont'd						
	D1-M, D2-M, (2 D.)						
	(code 711)	1	2271 750	---- ---	---- ---	2271 750	
	(code 712)	1	2271 751				
	(code 713)	1	2271 752	---- ---	---- ---	2271 752	
	(code 714)	1	2271 753	---- ---	---- ---	2271 753	
	(code 715)	1	---- ---	---- ---	---- ---	2271 754	
	D1-M, D2-M, (4 D.)						
	(code 711)	1	2271 760	---- ---	2271 760		
	(code 712)	1	2271 761				
	(code 713)	1	2271 762	---- ---	2271 762		
	(code 714)	1	2271 763	---- ---	2271 763		
	(code 715)	1	2271 764	---- ---	2271 764		
	(code 831)	1	2271 900				
	(code 834)	1	2271 901				
	(code 861)	1	---- ---	---- ---	2415 814		
	D1-H, D2-H						
	(codes 721, 811)	1	2293 100	2273 705	2273 705	2273 705	2273 705
	(codes 722, 812)	1	2293 101	2273 706	2273 706	2273 706	2273 706
	(codes 723, 813)	1	2293 102	2273 707	2273 707	2273 707	2273 707
	(codes 724, 814)	1	2293 103	2273 708	2273 708	2273 708	2273 708
	(codes 725, 815)	1	2293 104	2273 709	2273 709	2273 709	2273 709
	(code 841)	1	2271 900				
	(code 844)	1	2271 901				
	D2-P						
	(code 811)	1	---- ---	2273 705			
	(code 812)	1	---- ---	2273 706			
	(code 813)	1	---- ---	2273 707			
	(code 815)	1	---- ---	2273 709			
	(code 851)	2	---- ---	---- ---	---- ---	2296 265	2296 265
	(code 852)	2	---- ---	---- ---	---- ---	2296 266	2296 266
	(code 853)	2	---- ---	---- ---	---- ---	2296 267	2296 267
	(code 855)	2	---- ---	---- ---	---- ---	2296 268	2296 268
	(code 856)	2	---- ---	---- ---	---- ---	2296 269	2296 269
23-108-7	INSERT, Front Cushion						
	L1-H						
	(code 631)	1	2271 931	---- ---	2271 931		
	(code 632)	1	2296 005	---- ---	2296 005		
	(code 633)	1	2271 932	---- ---	2271 932		
	(code 635)	1	2296 578	---- ---	2296 578		
23-108-12	SEAT, Front (Less Cushion)						
	L1-L (2 D.)						
	(codes 611, 614, 615)	1	2272 618-9				
	(w/heavy duty spring)	1	2296 625-6				
	L1-L (4 D.)						
	(codes 611, 614, 615)	1	2246 263				
	(w/heavy duty spring)	1	2296 635				
	(code 664)	1	2274 278				
	(w/heavy duty spring)	1	2273 653				
	(code 694)	1	2274 327				
	(codes 641, 644, 645)	1	---- ---	---- ---	2246 272		
	(w/heavy duty spring)	1	---- ---	---- ---	2296 642		
	L1-H (2 D.)						
	(code 631)	1	2273 570-1				
	(code 632)	1	2296 012-3				
	(code 633)	1	2273 572-3				
	(code 635)	1	2296 584-5				

★ Indicates use as required.
⊟ Indicates parts not listed in any previous parts book.
Right and left part numbers are on same line, first number is right, second number is left.
* Indicates change or addition.

Printed in U.S.A.
Prices and specifications subject to change without notice.
March 8, 1963 Supersedes May 1, 1962.

MyMopar.com

CODE	REMARKS	PER CAR	SED.	SP. 4 D.	SUB.	SP. CL. CP.	CV. CP.
23-108-12	SEAT, Front (Less Cushion)-Cont'd						
	L1-H (4 D.)						
	(code 631)	1	2273 588	---- ---	2273 588		
	(code 632)	1	2296 032	---- ---	2296 032		
	(code 633)	1	2273 589	---- ---	2273 589		
	(code 635)	1	2296 598	---- ---	2296 598		
	(code 671)	1	2272 852				
	(code 675)	1	2272 853				
	L1-P						
	(see part type code 23-108-15)						
	D1-L, D2-L, (2 D.)						
	(code 701)	1	2271 712-3				
	(w/heavy duty spring)	1	2296 134-5				
	(code 703)	1	2271 714-5				
	(w/heavy duty spring)	1	2296 136-7				
	(code 704)	1	2271 716-7				
	(code 894)	1	2293 656-7				
	(w/heavy duty spring)	1	2293 658-9				
	(w/ash receiver) Right	1	2293 820				
	(w/heavy duty spring and ash receiver)	1	2414 935				
	D1-L, D2-L, (4 D.)						
	(codes 701, 801)	1	2271 742	---- ---	2271 843		
	(w/heavy duty spring)	1	2296 185	---- ---	2296 167		
	(w/ash receiver)	1	2296 182	---- ---	2296 164		
	(codes 703, 803)	1	2271 743	---- ---	2271 844		
	(w/heavy duty spring)	1	2296 186	---- ---	2296 168		
	(w/ash receiver)	1	2296 183	---- ---	2296 165		
	(codes 704, 804)	1	2271 744	---- ---	2271 845		
	(w/heavy duty spring)	1	2296 187	---- ---	2296 169		
	(w/ash receiver)	1	2296 184	---- ---	2296 166		
	(code 821)	1	2271 906				
	(code 824)	1	2271 907				
	(code 894)	1	2293 639				
	(w/heavy duty spring)	1	2293 640				
	(w/ash receiver)	1	2293 827				
	D3-L (w/seat back insert)						
	(code 301)	1	*2131 485	*2131 485	---- ---	*2131 550-1	
	(code 303)	1	2131 486	2131 486	---- ---	2131 552-3	
	(code 304)	1	2131 487	2131 487	---- ---	2131 554-5	
	(code 305)	1	2131 488	2131 488	---- ---	2131 556-7	
	D3-L (less seat back insert)						
	(code 301)	1	*2144 424	*2144 424	---- ---	*2144 456-7	
	(code 303)	1	*2144 425	*2144 425	---- ---	*2144 458-9	
	(code 304)	1	*2144 426	*2144 426	---- ---	*2144 460-1	
	(code 305)	1	*2144 427	*2144 427	---- ---	*2144 462-3	
	D3-L (w/seat back insert)						
	(code 341)	1	⊟2144 281	⊟2144 281	---- ---	⊟2144 316-7	
	(code 343)	1	⊟2144 282	⊟2144 282	---- ---	⊟2144 318-9	
	(code 344)	1	⊟2144 283	⊟2144 283	---- ---	⊟2144 320-1	
	(code 345)	1	⊟2144 284	⊟2144 284	---- ---	⊟2144 322-3	
	D3-L (less seat back insert)						
	(code 341)	1	*2144 504	*2144 504	---- ---	*2144 536-7	
	(code 343)	1	*2144 505	*2144 505	---- ---	*2144 538-9	
	(code 344)	1	*2144 506	*2144 506	---- ---	*2144 540-1	
	(code 345)	1	*2144 507	*2144 507	---- ---	*2144 542-3	
	D1-M, D2-M, (2 D.)						
	(code 711)	1	2271 884-5	---- ---	---- ---	2271 884-5	
	(w/heavy duty spring)	1	2296 236-7	---- ---	---- ---	2296 236-7	

★ Indicates use as required.
⊟ Indicates parts not listed in any previous parts book.
March 8, 1963 Supersedes May 1, 1962.

Printed in U.S.A.
Prices and specifications subject to change without notice.
Right and left part numbers are on same line, first number is right, second number is left.
* Indicates change or addition.

MyMopar.com

CODE	REMARKS	PER CAR	SED.	SP. 4 D.	SUB.	SP. CL. CP.	CV. CP.
23-108-12	SEAT FRONT, Less Cushion - Cont'd						
	D1-M, D2-M, (2 D.)						
	(code 712)	1	2271 886-7				
	(w/heavy duty spring)	1	2296 238-9				
	(code 713)	1	2271 888-9	---- ---	---- ---	2271 888-9	
	(w/heavy duty spring)	1	2296 240-1	---- ---	---- ---	2296 240-1	
	(code 714)	1	2271 890-1	---- ---	---- ---	2271 890-1	
	(w/heavy duty spring)	1	2296 242-3	---- ---	---- ---	2296 242-3	
	(code 715)	1	---- ---	---- ---	---- ---	2271 892-3	
	(w/heavy duty spring)	1	---- ---	---- ---	---- ---	2296 244-5	
	D1-M, D2-M, (4 D.)						
	(code 711)	1	2271 790	---- ---	2271 790		
	(w/heavy duty spring)	1	2296 205	---- ---	2296 205		
	(code 712)	1	2271 791				
	(w/heavy duty spring)	1	2296 206				
	(code 713)	1	2271 792	---- ---	2271 792		
	(w/heavy duty spring)	1	2296 207	---- ---	2296 207		
	(code 714)	1	2271 793	---- ---	2271 793		
	(w/heavy duty spring)	1	2296 208	---- ---	2296 208		
	(code 715)	1	2271 794	---- ---	2271 794		
	(w/heavy duty spring)	1	2296 209	---- ---	2296 209		
	(code 831)	1	2271 906				
	(code 834)	1	2271 907				
	(code 861)	1	---- ---	---- ---	2415 838		
	(w/heavy duty spring)	1	---- ---	---- ---	2415 842		
	D1-H, D2-H						
	(codes 721, 811)	1	2293 126-7	2273 730-1	2273 730-1	2293 472-3	2293 472-3
	(codes 722, 812)	1	2293 128-9	2273 732-3	2273 732-3	2293 474-5	2293 474-5
	(codes 723, 813)	1	2293 130-1	2273 734-5	2273 734-5	2293 476-7	2293 476-7
	(codes 724, 814)	1	2293 132-3	2273 736-7	2273 736-7	2293 478-9	2293 478-9
	(codes 725, 815)	1	2293 134-5	2273 738-9	2273 738-9	2293 480-1	2293 480-1
	(code 841)	1	2271 906				
	(code 844)	1	2271 907				
23-108-15	SPRING and COVER, Front Seat Back						
	L1-P						
	(code 651)	2	---- ---	---- ---	---- ---	2296 415	
	(code 652)	2	---- ---	---- ---	---- ---	2296 416	
	(code 653)	2	---- ---	---- ---	---- ---	2296 417	
	(code 655)	2	---- ---	---- ---	---- ---	2296 418	
	D2-P						
	(code 851)	2	---- ---	---- ---	---- ---	2296 290	2296 290
	(code 852)	2	---- ---	---- ---	---- ---	2296 291	2296 291
	(code 853)	2	---- ---	---- ---	---- ---	2296 292	2296 292
	(code 855)	2	---- ---	---- ---	---- ---	2296 293	2296 293
	(code 856)	2	---- ---	---- ---	---- ---	2296 294	2296 294
	D3-L						
	(code 401)	1	---- ---	---- ---	---- ---	---- ---	2131 910-1
	(code 403)	1	---- ---	---- ---	2132 587		
	(code 404)	1	---- ---	2131 869	2131 869	2131 912-3	2131 912-3
	(code 405)	1	---- ---	2131 870	2131 870	2131 914-5	2131 914-5
23-108-16	COVER, Front Seat Back						
	L1-L (2 D.)						
	(codes 611, 614, 615)	1	2246 424-5				
	L1-L (4 D.)						
	(codes 611, 614, 615)	1	2246 262				
	(code 664)	1	2274 277				
	(code 694)	1	2274 326				
	(codes 641, 644, 645)	1	---- ---	---- ---	2246 271		

★ Indicates use as required.
⊟ Indicates parts not listed in any previous parts book.
Right and left part numbers are on same line, first number is right, second number is left.
* Indicates change or addition.

Printed in U.S.A.
Prices and specifications subject to change without notice.
March 8, 1963 Supersedes May 1, 1962.

MyMopar.com

CODE	REMARKS	PER CAR	SED.	SP. 4 D.	SUB.	SP. CL. CP.	CV. CP.
23-108-16	COVER, Front Seat Back - Cont'd						
	L1-H (2 D.)						
	(code 631)	1	2273 564-5				
	(code 632)	1	2296 008-9				
	(code 633)	1	2273 566-7				
	(code 635)	1	2296 580-1				
	L1-H (4 D.)						
	(code 631)	1	2273 585	---- ---	2273 585		
	(code 632)	1	2296 029	---- ---	2296 029		
	(code 633)	1	2273 586	---- ---	2273 586		
	(code 635)	1	2296 596	---- ---	2296 596		
	(code 671)	1	2272 850				
	(code 675)	1	2272 851				
	L1-P						
	(code 651)	2	---- ---	---- ---	---- ---	2296 411	
	(code 652)	2	---- ---	---- ---	---- ---	2296 412	
	(code 653)	2	---- ---	---- ---	---- ---	2296 413	
	(code 655)	2	---- ---	---- ---	---- ---	2296 414	
	D1-L, D2-L, (2 D.)						
	(code 701)	1	2271 706-7				
	(code 703)	1	2271 708-9				
	(code 704)	1	2271 710-1				
	(code 894)	1	2293 654-5				
	D1-L, D2-L, (4 D.)						
	(codes 701, 801)	1	2271 739	---- ---	2271 840		
	(codes 703, 803)	1	2271 740	---- ---	2271 841		
	(codes 704, 804)	1	2271 741	---- ---	2271 842		
	(code 821)	1	2271 904				
	(code 824)	1	2271 905				
	(code 894)	1	2293 638				
	D3-L (w/seat back insert)						
	(code 301)	1	*2131 489	*2131 489	---- ---	*2131 558-9	
	(code 303)	1	2131 490	2131 490	---- ---	2131 560-61	
	(code 304)	1	2131 491	2131 491	---- ---	2131 562-3	
	(code 305)	1	2131 492	2131 492	---- ---	2131 564-5	
	D3-L (less seat back insert)						
	(code 301)	1	*2144 428	*2144 428	---- ---	*2144 464-5	
	(code 303)	1	*2144 429	*2144 429	---- ---	*2144 466-7	
	(code 304)	1	*2144 430	*2144 430	---- ---	*2144 468-9	
	(code 305)	1	*2144 431	*2144 431	---- ---	*2144 470-1	
	D3-L (w/seat back insert)						
	(code 341)	1	*2144 285	*2144 285	---- ---	*2144 324-5	
	(code 343)	1	*2144 286	*2144 286	---- ---	*2144 326-7	
	(code 344)	1	*2144 287	*2144 287	---- ---	*2144 328-9	
	(code 345)	1	*2144 288	*2144 288	---- ---	*2144 330-1	
	D3-L (less seat back insert)						
	(code 341)	1	*2144 508	*2144 508	---- ---	*2144 544-5	
	(code 343)	1	*2144 509	*2144 509	---- ---	*2144 546-7	
	(code 344)	1	*2144 510	*2144 510	---- ---	*2144 548-9	
	(code 345)	1	*2144 511	*2144 511	---- ---	*2144 550-1	
	(code 401)	1	---- ---	---- ---	---- ---	---- ---	2131 916-7
	(code 403)	1	---- ---	---- ---	2132 588		
	(code 404)	1	---- ---	2131 872	2131 872	2131 918-9	2131 918-9
	(code 405)	1	---- ---	2131 873	2131 873	2131 920-1	2131 920-1
	D1-M, D2-M, (2 D.)						
	(code 711)	1	2271 874-5	---- ---	---- ---	2271 874-5	
	(code 712)	1	2271 876-7				
	(code 713)	1	2271 878-9	---- ---	---- ---	2271 878-9	
	(code 714)	1	2271 880-1	---- ---	---- ---	2271 880-1	
	(code 715)	1	---- ---	---- ---	---- ---	2271 882-3	

★ Indicates use as required.
⊟ Indicates parts not listed in any previous parts book.
March 8, 1963 Supersedes May 1, 1962.

Printed in U.S.A.
Prices and specifications subject to change without notice.
Right and left part numbers are on same line, first number is right, second number is left.
* Indicates change or addition.

MyMopar.com

CODE	REMARKS	PER CAR	SED.	SP. 4 D.	SUB.	SP. CL. CP.	CV. CP.
23-108-16	COVER, Front Seat Back-Cont'd						
	D1-M, D2-M, (4 D.)						
	(code 711)	1	2271 785	---- ---	2271 785		
	(code 712)	1	2271 786				
	(code 713)	1	2271 787	---- ---	2271 787		
	(code 714)	1	2271 788	---- ---	2271 788		
	(code 715)	1	2271 789	---- ---	2271 789		
	(code 831)	1	2271 904				
	(code 834)	1	2271 905				
	(code 861)	1	---- ---	---- ---	2415 834		
	(code 863)	1	---- ---	---- ---	2415 835		
	(code 864)	1	---- ---	---- ---	2415 836		
	(code 865)	1	---- ---	---- ---	2415 837		
	D1-H, D2-H						
	(codes 721, 811)	1	2293 116-7	2273 720-1	2273 720-1	2273 720-1	2273 720-1
	(codes 722, 812)	1	2293 118-9	2273 722-3	2273 722-3	2273 722-3	2273 722-3
	(codes 723, 813)	1	2293 120-1	2273 724-5	2273 724-5	2273 724-5	2273 724-5
	(codes 724, 814)	1	2293 122-3	2273 726-7	2273 726-7	2273 726-7	2273 726-7
	(codes 725, 815)	1	2293 124-5	2273 728-9	2273 728-9	2273 728-9	2273 728-9
	(code 841)	1	2271 904				
	(code 844)	1	2271 905				
	D2-P						
	(code 851)	2	---- ---	---- ---	---- ---	2296 285	2296 285
	(code 852)	2	---- ---	---- ---	---- ---	2296 286	2296 286
	(code 853)	2	---- ---	---- ---	---- ---	2296 287	2296 287
	(code 855)	2	---- ---	---- ---	---- ---	2296 288	2296 288
	(code 856)	2	---- ---	---- ---	---- ---	2296 289	2296 289
23-108-17	INSERT, Front Seat Back Front						
	L1-H (2 D.)						
	(code 631)	1	2271 944-5				
	(code 632)	1	2296 010-11				
	(code 633)	1	2271 946-7				
	(code 635)	1	2296 582-3				
	L1-H (4 D.)						
	(code 631)	1	2271 928	---- ---	2271 928		
	(code 632)	1	2296 031	---- ---	2296 031		
	(code 633)	1	2271 929	---- ---	2271 929		
	(code 635)	1	2296 597	---- ---	2296 597		
23-108-32	PANEL, Back of Front Seat Back						
	L1-P (panel w/cover)						
	(code 651)	2	---- ---	---- ---	---- ---	2296 427	
	(code 652)	2	---- ---	---- ---	---- ---	2296 428	
	(code 653)	2	---- ---	---- ---	---- ---	2296 429	
	(code 655)	2	---- ---	---- ---	---- ---	2296 430	
	L1-P (cover)						
	(code 651)	2	---- ---	---- ---	---- ---	2296 423	
	(code 652)	2	---- ---	---- ---	---- ---	2296 424	
	(code 653)	2	---- ---	---- ---	---- ---	2296 425	
	(code 655)	2	---- ---	---- ---	---- ---	2296 426	
	D2-P (panel w/cover)						
	(code 851)	2	---- ---	---- ---	---- ---	2296 300	2296 300
	(code 852)	2	---- ---	---- ---	---- ---	2296 301	2296 301
	(code 853)	2	---- ---	---- ---	---- ---	2296 302	2296 302
	(code 855)	2	---- ---	---- ---	---- ---	2296 303	2296 303
	(code 856)	2	---- ---	---- ---	---- ---	2296 304	2296 304
	D3-L						
	(code 404) (panel w/cover) Rt.	1	---- ---	2177 496	2177 496	2177 499	2177 499
	Lt.	1	---- ---	---- ---	---- ---	2177 500	2177 500
	(code 401) (panel w/cover)	1	---- ---	---- ---	---- ---	---- ---	2177 497-8
	(code 403) (panel w/cover)	1	---- ---	---- ---	2178 620		
	(code 405) (panel w/cover)	1	---- ---	2177 495	2177 495	2177 501-2	2177 501-2

★ Indicates use as required.
⊟ Indicates parts not listed in any previous parts book.
Right and left part numbers are on same line, first number is right, second number is left.
* Indicates change or addition.

Printed in U.S.A.
Prices and specifications subject to change without notice.
March 8, 1963 Supersedes May 1, 1962.

MyMopar.com

CODE	REMARKS	PER CAR	SED.	SP. 4 D.	SUB.	SP. CL. CP.	CV. CP.
23-108-57	NUT, Front Seat Cushion Bumper						
	D1, D2 (to rear rail)	4	2094 869				
23-108-84	COVER, Front Seat Back Outer Hinge Arm (paint as required)						
	L1-P	4	---- ---	---- ---	---- ---	2172 835	
	D1, D2						
	(codes 701, 711, 721, 811)(blue)	1	2272 476-7	2272 476-7	2272 476-7	2272 476-7	2272 476-7
	(codes 703, 713, 723, 813) (cocoa)	1	2272 480-1	2272 480-1	2272 480-1	2272 480-1	2272 480-1
	(codes 704, 714, 724, 734, 814, 894) (gray)	1	2272 482-3	2272 482-3	2272 482-3	2272 482-3	2272 482-3
	(codes 712, 722, 812) (green)	1	2272 478-9	2272 478-9	2272 478-9	2272 478-9	2272 478-9
	(codes 715, 725, 815) (red)	1	2272 484-5	2272 484-5	2272 484-5	2272 484-5	2272 484-5
	Back Hinge Post (black)	4	---- ---	---- ---	---- ---	2172 835	2172 835
23-108-98	SHIELD, Front Seat Side						
	L1-P, D2-P Back	2	---- ---	---- ---	---- ---	2161 236-7	2161 236-7
	Cushion	1	---- ---	---- ---	---- ---	2292 492-3	2292 492-3
	D3-L						
	(upper or back) (anodized)	1	---- ---	2080 868-9	---- ---	2080 868-9	2080 868-9
	(seat cushion)(manual and power) (anodized) Rt.	1	2080 732	2080 732	2080 732	2080 732	2080 732
	(seat cushion) (power adj.) (anodized) Lt.	1	2080 733	2080 733	2080 733	2080 733	2080 733
	(seat cushion) (manual adj.) (anodized) Lt.	1	2080 737	2080 737	2080 737	2080 737	2080 737
23-108-142	BRACKET, Front Seat Side Shield Support						
	L1-P, D2-P	2	---- ---	---- ---	---- ---	2292 475	2292 475
23-109-3	BACK, Rear Seat						
	L1-L (Sub. 2nd Seat)						
	(codes 611, 614, 615)	1	2246 268				
	(w/heavy duty spring)	1	2296 631				
	(code 664)	1	2274 283				
	(w/heavy duty spring)	1	2273 656				
	(code 694)	1	2274 332				
	(codes 641, 644, 645) (spring and cover)	1	---- ---	---- ---	2246 277		
	L1-H (Sub. 2nd. Seat)						
	(code 631)	1	2273 606	---- ---	2273 621		
	(code 632)	1	2296 020	---- ---	2296 041		
	(code 633)	1	2273 607	---- ---	2273 622		
	(code 635)	1	2296 592	---- ---	2296 605		
	(code 671)	1	2272 866				
	(code 675)	1	2272 867				
	L1-P						
	(code 651)	1	---- ---	---- ---	---- ---	2296 107	
	(code 652)	1	---- ---	---- ---	---- ---	2296 449	
	(code 653)	1	---- ---	---- ---	---- ---	2296 108	
	(code 655)	1	---- ---	---- ---	---- ---	2296 109	
	D1-L, D2-L, (Sub. 2nd Seat)						
	(codes 701, 801)	1	2271 730	---- ---	2271 864		
	(w/heavy duty spring)	1	2296 157				
	(codes 703, 803)	1	2271 731	---- ---	2296 993		
	(w/heavy duty spring)	1	2296 158				
	(codes 704, 804) (4 D.)	1	---- ---	2296 994			
	(w/heavy duty spring)	1	2296 159				
	(code 821)	1	2271 918				
	(code 824)	1	2271 919				
	(code 894)	1	2293 649				
	(w/heavy duty spring)	1	2293 650				

★ Indicates use as required.
⊟ Indicates parts not listed in any previous parts book.
March 8, 1963 Supersedes May 1, 1962.

Printed in U.S.A.
Prices and specifications subject to change without notice.
Right and left part numbers are on same line, first number is right, second number is left.
* Indicates change or addition.

MyMopar.com

CODE	REMARKS	PER CAR	SED.	SP. 4 D.	SUB.	SP. CL. CP.	CV. CP.
23-109-3	BACK, Rear Seat - Cont'd						
	D3-L						
	(code 301)	1	2131 501	2131 501	---- ---	2131 578	
	(code 303)	1	2131 502	2131 502	---- ---	2131 579	
	(code 304)	1	2131 503	2131 503	---- ---	2131 580	
	(code 305)	1	2131 504	2131 504	---- ---	2131 581	
	(code 341)	1	*2144 296	*2144 296	---- ---	*2144 340	
	(code 343)	1	*2144 297	*2144 297	---- ---	*2144 341	
	(code 344)	1	*2144 298	*2144 298	---- ---	*2144 342	
	(code 345)	1	*2144 299	*2144 299	---- ---	*2144 343	
	(code 404)	1	---- ---	2131 884	---- ---	2132 737	2131 935
	(code 405)	1	---- ---	2131 885	---- ---	2132 738	2131 936
	(code 401)	1	---- ---	---- ---	---- ---	---- ---	2131 934
	(code 404) (2nd seat)	1	---- ---	---- ---	2131 956		
	(code 405) (2nd seat)	1	---- ---	---- ---	2131 957		
	(code 403) (2nd seat)	1	---- ---	---- ---	2132 592		
	(code 403) (3rd seat)	1	---- ---	---- ---	2132 596		
	(code 404) (3rd seat)	1	---- ---	---- ---	2131 968		
	(code 405) (3rd seat)	1	---- ---	---- ---	2131 969		
	D1-M, D2-M, (Sub. 2nd. Seat)						
	(code 711)	1	2271 805	---- ---	2415 632	2271 805	
	(w/heavy duty spring)	1	2296 225	---- ---	---- ---	2296 225	
	(code 712)	1	2271 806				
	(w/heavy duty spring)	1	2296 226				
	(code 713)	1	2271 807	---- ---	2415 633	2271 807	
	(w/heavy duty spring)	1	2296 227	---- ---	---- ---	2296 227	
	(code 714)	1	2271 808	---- ---	2415 634	2271 808	
	(w/heavy duty spring)	1	2296 228	---- ---	---- ---	2296 228	
	(code 715)	1	2271 809	---- ---	2415 635	2271 809	
	(w/heavy duty spring)	1	2296 229	---- ---	---- ---	2296 229	
	(code 831)	1	2271 918				
	(code 834)	1	2271 919				
	(code 861)	1	---- ---	---- ---	2415 882		
	(code 863)	1	---- ---	---- ---	2415 883		
	(code 864)	1	---- ---	---- ---	2415 884		
	(code 865)	1	---- ---	---- ---	2415 885		
	D1-M, D2-M, (Sub. 3rd. Seat)						
	(code 711)	1	---- ---	---- ---	2273 700		
	(code 713)	1	---- ---	---- ---	2273 701		
	(code 714)	1	---- ---	---- ---	2273 702		
	(code 715)	1	---- ---	---- ---	2273 703		
	(code 861)	1	---- ---	---- ---	2415 914		
	(code 863)	1	---- ---	---- ---	2415 915		
	(code 864)	1	---- ---	---- ---	2415 916		
	(code 865)	1	---- ---	---- ---	2415 917		
	D1-H, D2-H, (Sub. 2nd. Seat)						
	(codes 721, 811)	1	2293 166	2273 770	2415 680	2273 770	2273 683
	(codes 722, 812)	1	2293 167	2273 771	2415 681	2273 771	2273 684
	(codes 723, 813)	1	2293 168	2273 772	2415 682	2273 772	2273 685
	(codes 724, 814)	1	2293 169	2273 773	2415 683	2273 773	2273 686
	(codes 725, 815)	1	2293 170	2273 774	2415 684	2273 774	2273 687
	(code 841)	1	2271 918				
	(code 844)	1	2271 919				
	D1-H, D2-H, (Sub. 3rd. Seat)						
	(code 811)	1	---- ---	---- ---	2273 810		
	(code 812)	1	---- ---	---- ---	2273 811		
	(code 813)	1	---- ---	---- ---	2273 812		
	(code 814)	1	---- ---	---- ---	2273 813		
	(code 815)	1	---- ---	---- ---	2273 814		

★ Indicates use as required.
⊟ Indicates parts not listed in any previous parts book.
Right and left part numbers are on same line, first number is right, second number is left.
* Indicates change or addition.

Printed in U.S.A.
Prices and specifications subject to change without notice.
March 8, 1963 Supersedes May 1, 1962.

MyMopar.com

CODE	REMARKS	PER CAR	SED.	SP. 4 D.	SUB.	SP. CL. CP.	CV. CP.
23-109-3	BACK, Rear Seat - Cont'd						
	D2-P						
	(code 851)	1	---- ---	---- ---	---- ---	2296 375	2296 390
	(code 852)	1	---- ---	---- ---	---- ---	2296 376	2296 391
	(code 853)	1	---- ---	---- ---	---- ---	2296 377	2296 392
	(code 855)	1	---- ---	---- ---	---- ---	2296 378	2296 393
	(code 856)	1	---- ---	---- ---	---- ---	2296 379	2296 394
23-109-4	COVER, Rear Seat Back						
	L1-L (Sub. 2nd Seat)						
	(codes 611, 614, 615)	1	2246 267				
	(code 664)	1	2274 282				
	(code 694)	1	2274 331				
	(codes 641, 644, 645)	1	---- ---	---- ---	2246 276		
	L1-H, L1-P, (Sub. 2nd. Seat)						
	(codes 631, 651)	1	2273 603	---- ---	2273 618	2296 104	
	(codes 632, 652)	1	2296 017	---- ---	2296 039	2296 448	
	(codes 633, 653)	1	2273 604	---- ---	2273 619	2296 105	
	(codes 635, 655)	1	2296 590	---- ---	2296 603	2296 106	
	(code 671)	1	2272 864				
	(code 675)	1	2272 865				
	D1-L, D2-L, (Sub. 2nd. Seat)						
	(codes 701, 801)	1	2271 727	---- ---	2271 861		
	(codes 703, 803)	1	2271 728	---- ---	2271 862		
	(codes 704, 804)	1	2271 729	---- ---	2271 863		
	(code 821)	1	2271 916				
	(code 824)	1	2271 917				
	(code 894)	1	2293 648				
	D3-L						
	(code 301)	1	2131 505	2131 505	---- ---	2131 582	
	(code 303)	1	2131 506	2131 506	---- ---	2131 583	
	(code 304)	1	2131 507	2131 507	---- ---	2131 584	
	(code 305)	1	2131 508	2131 508	---- ---	2131 585	
	(code 341)	1	*2144 300	*2144 300	---- ---	*2144 344	
	(code 343)	1	*2144 301	*2144 301	---- ---	*2144 345	
	(code 344)	1	*2144 302	*2144 302	---- ---	*2144 346	
	(code 345)	1	*2144 303	*2144 303	---- ---	*2144 347	
	(code 401)	1	---- ---	---- ---	---- ---	---- ---	2131 937
	(code 403) (2nd seat)	1	---- ---	---- ---	2132 593		
	(code 403) (3rd seat)	1	---- ---	---- ---	2132 597		
	(code 404)	1	---- ---	2131 887	---- ---	2132 739	2131 938
	(code 404) (2nd seat)	1	---- ---	---- ---	2131 959		
	(code 404) (3rd seat)	1	---- ---	---- ---	2131 971		
	(code 405)	1	---- ---	2131 888	---- ---	2132 740	2131 939
	(code 405) (2nd seat)	1	---- ---	---- ---	2131 960		
	(code 405) (3rd seat)	1	---- ---	---- ---	2131 972		
	D1-M, D2-M, (Sub. 2nd. Seat)						
	(code 711)	1	2271 800	---- ---	2271 968	2271 800	
	(code 712)	1	2271 801				
	(code 713)	1	2271 802	---- ---	2271 969	2271 802	
	(code 714)	1	2271 803	---- ---	⊟2415 626	2271 803	
	(code 715)	1	2271 804	---- ---	2271 971	2271 804	
	(code 831)	1	2271 916				
	(code 834)	1	2271 917				
	(code 861)	1	---- ---	---- ---	2415 878		
	(code 863)	1	---- ---	---- ---	2415 879		
	(code 864)	1	---- ---	---- ---	2415 880		
	(code 865)	1	---- ---	---- ---	2415 881		

★ Indicates use as required.
⊟ Indicates parts not listed in any previous parts book.
March 8, 1963 Supersedes May 1, 1962.

Printed in U.S.A.
Prices and specifications subject to change without notice.
Right and left part numbers are on same line, first number is right, second number is left.
* Indicates change or addition.

MyMopar.com

CODE	REMARKS	PER CAR	SED.	SP. 4 D.	SUB.	SP. CL. CP.	CV. CP.
23-109-4	COVER, Rear Seat Back - Cont'd						
	D1-M, D2-M, (Sub. 3rd. Seat)						
	(code 711)	1	---- ---	---- ---	2271 988		
	(code 713)	1	---- ---	---- ---	2271 989		
	(code 714)	1	---- ---	---- ---	2271 990		
	(code 715)	1	---- ---	---- ---	2271 991		
	(code 861)	1	---- ---	---- ---	2415 910		
	(code 863)	1	---- ---	---- ---	2415 911		
	(code 864)	1	---- ---	---- ---	2415 912		
	(code 865)	1	---- ---	---- ---	2415 913		
	D1-H, D2-H, (Sub. 2nd. Seat)						
	(codes 721, 811)	1	2293 161	2273 765	2273 785	2273 765	2273 678
	(codes 722, 812)	1	2293 162	2273 766	2273 786	2273 766	2273 679
	(codes 723, 813)	1	2293 163	2273 767	2273 787	2273 767	2273 680
	D1-L, D2-L, (Sub. 2nd. Seat)						
	(codes 724, 814)	1	2293 164	2273 768	2273 788	2273 768	2273 681
	(codes 725, 815)	1	2293 165	2273 769	⊟2415 669	2273 769	2273 682
	(code 841)	1	2271 916				
	(code 844)	1	2271 917				
	D1-H, D2-H, (Sub. 3rd. Seat)						
	(code 811)	1	---- ---	---- ---	2273 805		
	(code 812)	1	---- ---	---- ---	2273 806		
	(code 813)	1	---- ---	---- ---	2273 807		
	(code 814)	1	---- ---	---- ---	2273 808		
	(code 815)	1	---- ---	---- ---	2273 809		
	D2-P						
	(code 851)	1	---- ---	---- ---	---- ---	2296 370	2296 385
	(code 852)	1	---- ---	---- ---	---- ---	2296 371	2296 386
	(code 853)	1	---- ---	---- ---	---- ---	2296 372	2296 387
	(code 855)	1	---- ---	---- ---	---- ---	2296 373	2296 388
	(code 856)	1	---- ---	---- ---	---- ---	2296 374	2296 389
23-109-5	INSERT, Rear Seat Back Rear Panel						
	D1, D2, (Sub. 2nd. Seat)						
	(codes 711, 801, 811, 861) (blue)	1	---- ---	---- ---	*2272 394		
	(codes 713, 803, 813, 863) (cocoa)	1	---- ---	---- ---	*2272 396		
	(codes 714, 715, 804, 814, 864) (gray)	1	---- ---	---- ---	*2272 397		
	(codes 715, 815, 865) (red)	1	---- ---	---- ---	*2297 272		
	(code 812) (green)	1	---- ---	---- ---	2272 395		
	D1, D2, (Sub. 3rd, Seat)						
	(codes 711, 811) (blue)	1	---- ---	---- ---	2272 398		
	(codes 713, 813) (cocoa)	1	---- ---	---- ---	2272 400		
	(codes 714, 715, 814, 815)(gray)	1	---- ---	---- ---	2272 401		
	(codes 715, 815) (red)	1	---- ---	---- ---	2297 273		
	(code 812) (green)	1	---- ---	---- ---	2272 399		
	D1, D2, (Sub. 3rd. Seat) (back support)						
	(codes 711, 811) (blue)	1	---- ---	---- ---	2272 402		
	(codes 713, 813) (cocoa)	1	---- ---	---- ---	2272 404		
	(codes 714, 715, 814, 815)(gray)	1	---- ---	---- ---	2272 405		
	(codes 715, 815) (red)	1	---- ---	---- ---	2297 277		
	(code 812) (green)	1	---- ---	---- ---	2272 403		
	D2-P (upper panel)	1	---- ---	---- ---	---- ---	---- ---	2297 223

★ Indicates use as required.
⊟ Indicates parts not listed in any previous parts book.
Right and left part numbers are on same line, first number is right, second number is left.
* Indicates change or addition.

Printed in U.S.A.
Prices and specifications subject to change without notice.
March 8, 1963 Supersedes May 1, 1962.

MyMopar.com

CODE	REMARKS	PER CAR	SED.	SP. 4 D.	SUB.	SP. CL. CP.	CV. CP.
23-109-5	INSERT, Rear Seat Back Rear Panel - Cont'd						
	D3-L						
	(codes 403, 404, 405)						
	(3rd seat) (gray)	1	---- ---	---- ---	2169 949		
	(code 403)						
	(2nd seat) (cover)	1	---- ---	---- ---	2132 584		
	(codes 404, 405)						
	(2nd seat) (cover)	1	---- ---	---- ---	2132 478		
23-109-7	INSERT, Rear Seat Back Front						
	L1-H (Sub. 2nd. Seat)						
	(code 631)	1	2271 937	---- ---	2271 950		
	(code 632)	1	2296 019	---- ---	2296 040		
	(code 633)	1	2271 938	---- ---	2271 951		
	(code 635)	1	2296 591	---- ---	2296 604		
23-109-35	CUSHION, Rear Seat						
	L1-L (Sub. 2nd Seat)						
	(codes 611, 614, 615)	1	2246 266				
	(w/heavy duty spring)	1	2296 630				
	(code 664)	1	2274 281				
	(w/heavy duty spring)	1	2273 655				
	(code 694)	1	2274 330				
	(w/airfoam pad)	1	2293 634				
	(codes 641, 644, 645)	1	---- ---	---- ---	2246 619		
	L1-H (Sub. 2nd. Seat)						
	(code 631)	1	2273 600	---- ---	2273 612		
	(code 632)	1	2296 016	---- ---	2296 038		
	(code 633)	1	2273 601	---- ---	2273 613		
	(code 635)	1	2296 589	---- ---	2296 602		
	(code 671)	1	2272 860				
	(code 675)	1	2272 861				
	L1-P						
	(code 651)	1	---- ---	---- ---	---- ---	2296 095	
	(code 652)	1	---- ---	---- ---	---- ---	2296 445	
	(code 653)	1	---- ---	---- ---	---- ---	2296 096	
	(code 655)	1	---- ---	---- ---	---- ---	2296 097	
	D1-L, D2-L, (Sub. 2nd. Seat)						
	(codes 701, 801)	1	2271 724	---- ---	2271 858		
	(w/heavy duty spring)	1	2296 149				
	(w/airfoam pad and heavy duty spring)	1	2296 153				
	(codes 703, 803)	1	2271 725	---- ---	2271 859		
	(w/heavy duty spring)	1	2296 150				
	(w/airfoam pad and heavy duty spring)	1	2296 154				
	D1-L, D2-L						
	(codes 704, 804) (4 D.)	1	2271 726	---- ---	2271 860		
	(w/heavy duty spring)	1	2296 151				
	(w/airfoam pad and heavy duty spring)	1	2296 155				
	(code 821)	1	2271 912				
	(code 824)	1	2271 913				
	(code 894)	1	2293 645				
	(w/airfoam pad)	1	2293 115				
	(w/heavy duty spring)	1	2293 646				
	(w/airfoam pad and heavy duty spring)	1	2293 647				
	D3-L						
	(code 301)	1	2131 509	2131 509	---- ---	2131 586	
	(w/airfoam pad)	1	2131 541	2131 541	---- ---	2131 618	

★ Indicates use as required.
B Indicates parts not listed in any previous parts book.
March 8, 1963 Supersedes May 1, 1962.

Printed in U.S.A.
Prices and specifications subject to change without notice.
Right and left part numbers are on same line, first number is right, second number is left.
* Indicates change or addition.

MyMopar.com

CODE	REMARKS	PER CAR	SED.	SP. 4 D.	SUB.	SP. CL. CP.	CV. CP.
23-109-35	CUSHION, Rear Seat - Cont'd						
	D3-L						
	(code 303)	1	2131 510	2131 510	---- ---	2131 587	
	(w/airfoam pad)	1	2131 542	2131 542	---- ---	2131 619	
	(code 304)	1	2131 511	2131 511	---- ---	2131 588	
	(w/airfoam pad)	1	2131 543	2131 543	---- ---	2131 620	
	(code 305)	1	2131 512	2131 512	---- ---	2131 589	
	(w/airfoam pad)	1	2131 544	2131 544	---- ---	2131 621	
	D3-L						
	(code 341)	1	*2144 304	*2144 304	---- ---	*2144 348	
	(code 343)	1	*2144 305	*2144 305	---- ---	*2144 349	
	(code 344)	1	*2144 306	*2144 306	---- ---	*2144 350	
	(code 345)	1	*2144 307	*2144 307	---- ---	*2144 351	
	D3-L (w/airfoam pad)						
	(code 341)	1	*2144 372	*2144 372	---- ---	*2144 400	
	(code 343)	1	*2144 373	*2144 373	---- ---	*2144 401	
	(code 344)	1	*2144 374	*2144 374	---- ---	*2144 402	
	(code 345)	1	*2144 375	*2144 375	---- ---	*2144 403	
	D3-L						
	(code 404)	1	---- ---	2131 890	---- ---	2132 741	
	(code 405)	1	---- ---	2131 891	---- ---	2132 742	
	(code 403) (2nd seat)	1	---- ---	---- ---	2132 594		
	(code 404) (2nd seat)	1	---- ---	---- ---	2131 962		
	(code 405) (2nd seat)	1	---- ---	---- ---	2131 963		
	(code 403) (3rd seat)	1	---- ---	---- ---	2132 598		
	(code 404) (3rd seat)	1	---- ---	---- ---	2131 974		
	(code 405) (3rd seat)	1	---- ---	---- ---	2131 975		
	(code 401)	1	---- ---	---- ---	---- ---	---- ---	2131 940
	(code 404)	1	---- ---	---- ---	---- ---	---- ---	2131 941
	(code 405)	1	---- ---	---- ---	---- ---	---- ---	2131 942
	D1-M, D2-M, (Sub. 2nd. Seat)						
	(code 711)	1	2271 775	---- ---	2271 960	2271 775	
	(w/airfoam pad)	1	2271 780	---- ---	2415 620	2271 780	
	(w/heavy duty spring)	1	2296 215	---- ---	---- ---	2296 215	
	(w/airfoam pad and heavy duty spring)	1	2296 220	---- ---	---- ---	2296 220	
	(code 712)	1	2271 776				
	(w/airfoam pad)	1	2271 781				
	(w/heavy duty spring)	1	2296 216				
	(w/airfoam pad and heavy duty spring)	1	2296 221				
	(code 713)	1	2271 777	---- ---	2415 617	2271 777	
	(w/airfoam pad)	1	2271 782	---- ---	2415 621	2271 782	
	(w/heavy duty spring)	1	2296 217	---- ---	---- ---	2296 217	
	(w/airfoam pad and heavy duty spring)	1	2296 222	---- ---	---- ---	2296 222	
	(code 714)	1	2271 778	---- ---	2271 962	2271 778	
	(w/airfoam pad)	1	2271 783	---- ---	2415 622	2271 783	
	(w/heavy duty spring)	1	2296 218	---- ---	---- ---	2296 218	
	(w/airfoam pad and heavy duty spring)	1	2296 223	---- ---	---- ---	2296 223	
	(code 715)	1	2271 779	---- ---	2415 619	2271 779	
	(w/airfoam pad)	1	2271 784	---- ---	2415 623	2271 784	
	(w/heavy duty spring)	1	2296 219	---- ---	---- ---	2296 219	
	(w/airfoam pad and heavy duty spring)	1	2296 224	---- ---	---- ---	2296 224	
	(code 831)	1	2271 912				
	(w/airfoam pad)	1	2271 914				
	(code 834)	1	2271 913				
	(w/airfoam pad)	1	2271 915				

★ Indicates use as required.
⊟ Indicates parts not listed in any previous parts book.
Right and left part numbers are on same line, first number is right, second number is left.
* Indicates change or addition.

Printed in U.S.A.
Prices and specifications subject to change without notice.
March 8, 1963 Supersedes May 1, 1962.

MyMopar.com

CODE	REMARKS	PER CAR	SED.	SP. 4 D.	SUB.	SP. CL. CP.	CV. CP.
23-109-35	CUSHION, Rear Seat - Cont'd						
	D1-M, D2-M (Sub. 2nd. Seat)						
	(code 861)	1	---- ---	---- ---	2415 862		
	(w/airfoam pad)	1	---- ---	---- ---	2415 866		
	(code 863)	1	---- ---	---- ---	2415 863		
	(w/airfoam pad)	1	---- ---	---- ---	2415 867		
	(code 864)	1	---- ---	---- ---	2415 864		
	(w/airfoam pad)	1	---- ---	---- ---	2415 868		
	(code 865)	1	---- ---	---- ---	2415 865		
	(w/airfoam pad)	1	---- ---	---- ---	2415 869		
	D1-M, D2-M, (Sub. 3rd. Seat)						
	(code 711)	1	---- ---	---- ---	2271 984		
	(code 713)	1	---- ---	---- ---	2271 985		
	(code 714)	1	---- ---	---- ---	2271 986		
	(code 715)	1	---- ---	---- ---	2271 987		
	(code 861)	1	---- ---	---- ---	2415 898		
	(code 863)	1	---- ---	---- ---	2415 899		
	(code 864)	1	---- ---	---- ---	2415 900		
	(code 865)	1	---- ---	---- ---	2415 901		
	D1-H, D2-H, (Sub. 2nd. Seat)						
	(codes 721, 811)	1	2293 151	2273 760	2415 655	2273 760	2273 668
	(w/airfoam pad)	1	2293 156	2273 690	2415 660	2273 690	2273 673
	(codes 722, 812)	1	2293 152	2273 761	2415 656	2273 761	2273 669
	(w/airfoam pad)	1	2293 157	2273 691	2415 661	2273 691	2273 674
	(codes 723, 813)	1	2293 153	2273 762	2415 657	2273 762	2273 670
	(w/airfoam pad)	1	2293 158	2273 692	2415 662	2273 692	2273 675
	(codes 724, 814)	1	2293 154	2273 763	2415 658	2273 763	2273 671
	(w/airfoam pad)	1	2293 159	2273 693	2415 663	2273 693	2273 676
	(codes 725, 815)	1	2293 155	2273 764	2415 659	2273 764	2273 672
	(w/airfoam pad)	1	2293 160	2273 694	2415 664	2273 694	2273 677
	(code 841)	1	2271 912				
	(w/airfoam pad)	1	2271 914				
	(code 844)	1	2271 913				
	(w/airfoam pad)	1	2271 915				
	D1-H, D2-H, (Sub. 3rd. Seat)						
	(code 811)	1	---- ---	---- ---	2273 800		
	(code 812)	1	---- ---	---- ---	2273 801		
	(code 813)	1	---- ---	---- ---	2273 802		
	(code 814)	1	---- ---	---- ---	2273 803		
	(code 815)	1	---- ---	---- ---	2273 804		
	D2-P						
	(code 851)	1	---- ---	---- ---	---- ---	2296 345	2296 360
	(code 852)	1	---- ---	---- ---	---- ---	2296 346	2296 361
	(code 853)	1	---- ---	---- ---	---- ---	2296 347	2296 362
	(code 855)	1	---- ---	---- ---	---- ---	2296 348	2296 363
	(code 856)	1	---- ---	---- ---	---- ---	2296 349	2296 364
	(2nd seat cushion to floor pan screw)	2	---- ---	---- ---	6023 545		
23-109-36	COVER, Rear Seat Cushion						
	L1-L (Sub. 2nd. Seat)						
	(codes 611, 614, 615)	1	2246 265				
	(code 664)	1	2274 280				
	(code 694)	1	2274 329				
	(codes 641, 644, 645)	1	---- ---	---- ---	2246 618		
	L1-H, L1-P, (Sub. 2nd. Seat)						
	(codes 631, 651)	1	2273 597	---- ---	2273 609	2296 092	
	(code 632)	1	2296 014	---- ---	2296 036		
	(codes 633, 653)	1	2273 598	---- ---	2273 610	2296 093	
	(codes 635, 655)	1	2296 587	---- ---	2296 600	2296 094	
	(code 671)	1	2272 858				
	(code 675)	1	2272 859				
	(code 652)	1	---- ---	---- ---	---- ---	2296 444	

★ Indicates use as required.
⊟ Indicates parts not listed in any previous parts book.
March 8, 1963 Supersedes May 1, 1962.

Printed in U.S.A.
Prices and specifications subject to change without notice.
Right and left part numbers are on same line, first number is right, second number is left.
* Indicates change or addition.

MyMopar.com

CODE	REMARKS	PER CAR	SED.	SP. 4 D.	SUB.	SP. CL. CP.	CV. CP.
23-109-36	COVER, Rear Seat Cushion - Cont'd						
	D1-L, D2-L, (Sub. 2nd. Seat)						
	(codes 701, 801)	1	2271 721	---- ---	*2271 855		
	(codes 703, 803)	1	2271 722	---- ---	*2271 856		
	(codes 704, 804) (4 D.)	1	2271 723	---- ---	2271 851		
	(code 821)	1	2271 910				
	(code 824)	1	2271 911				
	(code 894)	1	2293 644				
	D3-L						
	(code 301)	1	2131 513	2131 513	---- ---	2131 590	
	(code 303)	1	2131 514	2131 514	---- ---	2131 591	
	(code 304)	1	2131 515	2131 515	---- ---	2131 592	
	(code 305)	1	2131 516	2131 516	---- ---	2131 593	
	(code 341)	1	⊟2144 308	⊟2144 308	---- ---	⊟2144 352	
	(code 343)	1	⊟2144 309	⊟2144 309	---- ---	⊟2144 353	
	(code 344)	1	⊟2144 310	⊟2144 310	---- ---	⊟2144 354	
	(code 345)	1	⊟2144 311	⊟2144 311	---- ---	⊟2144 355	
	(code 404)	1	---- ---	2131 893	---- ---	2132 743	
	(code 405)	1	---- ---	2131 894	---- ---	2132 744	
	(code 403) (2nd seat)	1	---- ---	---- ---	2132 595		
	(code 404) (2nd seat)	1	---- ---	---- ---	2131 965		
	(code 405) (2nd seat)	1	---- ---	---- ---	2131 966		
	(code 403) (3rd seat)	1	---- ---	---- ---	2132 599		
	(code 404) (3rd seat)	1	---- ---	---- ---	2131 977		
	(code 405) (3rd seat)	1	---- ---	---- ---	2131 978		
	(code 401)	1	---- ---	---- ---	---- ---	---- ---	2131 943
	(code 404)	1	---- ---	---- ---	---- ---	---- ---	2131 944
	(code 405)	1	---- ---	---- ---	---- ---	---- ---	2131 945
	D1-M, D2-M, (Sub. 2nd. Seat)						
	(code 711)	1	2271 770	---- ---	2271 956	2271 770	
	(code 712)	1	2271 771				
	(code 713)	1	2271 772	---- ---	2271 957	2271 772	
	(code 714)	1	2271 773	---- ---	2271 958	2271 773	
	(code 715)	1	2271 774	---- ---	2271 959	2271 774	
	(code 831)	1	2271 910				
	(code 834)	1	2271 911				
	(code 861)	1	---- ---	---- ---	2415 858		
	(code 863)	1	---- ---	---- ---	2415 859		
	(code 864)	1	---- ---	---- ---	2415 860		
	(code 865)	1	---- ---	---- ---	2415 861		
	D1-M, D2-M, (Sub. 3rd. Seat)						
	(code 711)	1	---- ---	---- ---	2271 980		
	(code 713)	1	---- ---	---- ---	2271 981		
	(code 714)	1	---- ---	---- ---	2271 982		
	(code 715)	1	---- ---	---- ---	2271 983		
	(code 861)	1	---- ---	---- ---	2415 894		
	(code 863)	1	---- ---	---- ---	2415 895		
	(code 864)	1	---- ---	---- ---	2415 896		
	(code 865)	1	---- ---	---- ---	2415 897		
	D1-H, D2-H, (Sub. 2nd. Seat)						
	(codes 721, 811)	1	2293 146	2273 755	2273 775	2273 755	2273 663
	(codes 722, 812)	1	2293 147	2273 756	2273 776	2273 756	2273 664
	(codes 723, 813)	1	2293 148	2273 757	2273 777	2273 757	2273 665
	(codes 724, 814)	1	2293 149	2273 758	2273 778	2273 758	2273 666
	(codes 725, 815)	1	2293 150	2273 759	2273 779	2273 759	2273 667
	(code 841)	1	2271 910				
	(code 844)	1	2271 911				

★ Indicates use as required.
⊟ Indicates parts not listed in any previous parts book.
Right and left part numbers are on same line, first number is right, second number is left.
* Indicates change or addition.

Printed in U.S.A.
Prices and specifications subject to change without notice.
March 8, 1963 Supersedes May 1, 1962.

MyMopar.com

CODE	REMARKS	PER CAR	SED.	SP. 4 D.	SUB.	SP. CL. CP.	CV. CP.
23-109-36	COVER, Rear Seat Cushion-Cont'd						
	D1-H, D2-H, (Sub. 3rd. Seat)						
	(code 811)	1	---- ---	---- ---	2273 795		
	(code 812)	1	---- ---	---- ---	2273 796		
	(code 813)	1	---- ---	---- ---	2273 797		
	(code 814)	1	---- ---	---- ---	2273 798		
	(code 815)	1	---- ---	---- ---	2273 799		
	D2-P						
	(code 851)	1	---- ---	---- ---	---- ---	2296 340	2296 355
	(code 852)	1	---- ---	---- ---	---- ---	2296 341	2296 356
	(code 853)	1	---- ---	---- ---	---- ---	2296 342	2296 357
	(code 855)	1	---- ---	---- ---	---- ---	2296 343	2296 358
	(code 856)	1	---- ---	---- ---	---- ---	2296 344	2296 359
23-109-38	RETAINER, Rear Seat Cushion						
	L1, D1, D2, D3-L	2	1810 037	1810 037	1810 037	1810 037	1810 037
	RETAINER, Rear Floor Pan						
	3rd. Seat, Front						
	D1, D2	2	---- ---	---- ---	*2251 674		
	Rear	2	---- ---	---- ---	⊟2422 981		
	CATCH, 3rd. Seat Cushion						
	D1, D2	2	---- ---	---- ---	⊟2270 834		
23-109-40	INSERT, Rear Seat Cushion						
	L1-H (Sub. 2nd. Seat)						
	(code 631)	1	2271 940	---- ---	2271 953		
	(code 632)	1	2296 015	---- ---	2296 037		
	(code 633)	1	2271 941	---- ---	2271 954		
	(code 635)	1	2296 588	---- ---	2296 601		
	D3-L (Sub. 3rd seat)						
	(codes 403, 404, 405) (gray)	1	---- ---	---- ---	2169 948		
23-111-31	RETAINER, Folding Top Header						
	Outer Panel Tack Strip						
	D3-L	1	---- ---	---- ---	---- ---	---- ---	1952 194
23-111-37	STRIP, Folding Top Bow Tacking						
	D2-H (No. 1 and No. 2 bow)	2	---- ---	---- ---	---- ---	---- ---	1950 509
	(No. 3 bow)	1	---- ---	---- ---	---- ---	---- ---	2251 165
	D3-L						
	(No. 1 and No. 2 bow)	2	---- ---	---- ---	---- ---	---- ---	1950 509
	(rear)	1	---- ---	---- ---	---- ---	---- ---	1950 510
23-112-12	BOOT, Folding Top Dust						
	D2-H						
	(code 811) (blue)	1	---- ---	---- ---	---- ---	---- ---	2293 703
	(code 812) (green)	1	---- ---	---- ---	---- ---	---- ---	2293 704
	(code 813) (cocoa)	1	---- ---	---- ---	---- ---	---- ---	2293 705
	(code 814) (gray)	1	---- ---	---- ---	---- ---	---- ---	2293 706
	(code 815) (red)	1	---- ---	---- ---	---- ---	---- ---	2293 707
	D2-P (beige)	1	---- ---	---- ---	---- ---	---- ---	2296 532
	D3-L						
	(code 401) (blue)	1	---- ---	---- ---	---- ---	---- ---	2178 446
	(code 404) (black)	1	---- ---	---- ---	---- ---	---- ---	2178 447
	(code 405) (red)	1	---- ---	---- ---	---- ---	---- ---	2178 448
23-112-18	RETAINER, Channel Rear Seat						
	Back Dust Boot						
	D2-H, D2-P	1	---- ---	---- ---	---- ---	---- ---	2270 167
	D3-L	1	---- ---	---- ---	---- ---	---- ---	2410 007
23-112-19	INSERT, Rear Seat Back Dust						
	Boot Cover						
	D2-H, D2-P (vinyl)	1	---- ---	---- ---	---- ---	---- ---	2160 328

★ Indicates use as required.
⊟ Indicates parts not listed in any previous parts book.
March 8, 1963 Supersedes May 1, 1962.

Printed in U.S.A.
Prices and specifications subject to change without notice.
Right and left part numbers are on same line, first number is right, second number is left.
* Indicates change or addition.

MyMopar.com

CODE	REMARKS	PER CAR	SED.	SP. 4 D.	SUB.	SP. CL. CP.	CV. CP.
23-112-21	PLATE AND FASTENER, Front Seat Center Cushion Flap						
	D2-H	★	---- ---	---- ---	---- ---	---- ---	⊟2193 035
23-112-45	CURTAIN, Folding Top						
	D2-H (black)	1	---- ---	---- ---	---- ---	---- ---	2293 720
	(white)	1	---- ---	---- ---	---- ---	---- ---	2293 721
	D2-P (black)	1	---- ---	---- ---	---- ---	---- ---	2296 530
	(beige)	1	---- ---	---- ---	---- ---	---- ---	2296 531
	D3-L						
	(codes 401, 404, 405) (black)	1	---- ---	---- ---	---- ---	---- ---	2178 802
	(codes 401, 404, 405) (white)	1	---- ---	---- ---	---- ---	---- ---	2178 803
23-112-46	ZIPPER, Folding Top Curtain						
	D2-H, D2-P (black)	1	---- ---	---- ---	---- ---	---- ---	2273 435
	D3-L (black)	1	---- ---	---- ---	---- ---	---- ---	1965 887
23-112-70	RETAINER, Folding Top Belt Bar						
	D2-H, D2-P (center)	1	---- ---	---- ---	---- ---	---- ---	2189 748
	(side)	1	---- ---	---- ---	---- ---	---- ---	2189 852-3
	Top Trim (5/8″ x 8″)	2	---- ---	---- ---	---- ---	---- ---	2252 610
	D3-L (center)	1	---- ---	---- ---	---- ---	---- ---	1963 550
	(side)	1	---- ---	---- ---	---- ---	---- ---	2165 706-7
	(inner)	2	---- ---	---- ---	---- ---	---- ---	2216 421
23-112-75	END, Folding Top Wire on Binding						
	D2-H, D3-L	1	---- ---	---- ---	---- ---	---- ---	1158 976-7
23-112-88	CABLE, Folding Top Rear Bow Tension						
	D2-H	2	---- ---	---- ---	---- ---	---- ---	2166 660
	D3-L	2	---- ---	---- ---	---- ---	---- ---	2166 659
23-112-108	TOP DECK and SIDE QUARTER						
	D2-H (black on black)	1	---- ---	---- ---	---- ---	---- ---	2293 722
	(white on black)	1	---- ---	---- ---	---- ---	---- ---	2293 723
	D2-P (black on beige)	1	---- ---	---- ---	---- ---	---- ---	2296 526
	(beige on beige)	1	---- ---	---- ---	---- ---	---- ---	2296 527
	D3-L (black)	1	---- ---	---- ---	---- ---	---- ---	2178 404
	(white)	1	---- ---	---- ---	---- ---	---- ---	2178 405
23-112-112	PAD, Top Side Quarter Stay						
	D2-H (black)	1	---- ---	---- ---	---- ---	---- ---	2293 724-5
	D2-P (beige)	1	---- ---	---- ---	---- ---	---- ---	2296 536-7
	D3-L (black)	1	---- ---	---- ---	---- ---	---- ---	2178 796-7
23-112-153	PANEL or COVER, Folding Top Pocket						
	D2-H (panel and cover)						
	(code 811)	1	---- ---	---- ---	---- ---	---- ---	2293 692-3
	(code 812)	1	---- ---	---- ---	---- ---	---- ---	2293 694-5
	(code 813)	1	---- ---	---- ---	---- ---	---- ---	2293 696-7
	(code 814)	1	---- ---	---- ---	---- ---	---- ---	2293 698-9
	(code 815)	1	---- ---	---- ---	---- ---	---- ---	2293 700-1
	D2-P (panel)						
	(codes 851, 852, 853, 855, 856)	1	---- ---	---- ---	---- ---	---- ---	*2296 540-1
	D2-H (cover)						
	(code 811)	1	---- ---	---- ---	---- ---	---- ---	2293 682-3
	(code 812)	1	---- ---	---- ---	---- ---	---- ---	2293 684-5
	(code 813)	1	---- ---	---- ---	---- ---	---- ---	2293 686-7
	(code 814)	1	---- ---	---- ---	---- ---	---- ---	2293 688-9
	(code 815)	1	---- ---	---- ---	---- ---	---- ---	2293 690-1

★ Indicates use as required.
⊟ Indicates parts not listed in any previous parts book.
Right and left part numbers are on same line, first number is right, second number is left.
* Indicates change or addition.

Printed in U.S.A.
Prices and specifications subject to change without notice.
March 8, 1963 Supersedes May 1, 1962.

MyMopar.com

CODE	REMARKS	PER CAR	SED.	SP. 4 D.	SUB.	SP. CL. CP.	CV. CP.
23-112-153	PANEL or COVER, Folding Top Pocket - Cont'd						
	D2-H (well lining panel cover)						
	(code 811)	1	---- ---	---- ---	---- ---	---- ---	2293 708
	(code 812)	1	---- ---	---- ---	---- ---	---- ---	2293 709
	(code 813)	1	---- ---	---- ---	---- ---	---- ---	2293 710
	(code 814)	1	---- ---	---- ---	---- ---	---- ---	2293 711
	(code 815)	1	---- ---	---- ---	---- ---	---- ---	2293 712
	D2-H, Well Lining Panel	1	---- ---	---- ---	---- ---	---- ---	2293 719
	(cover)	1	---- ---	---- ---	---- ---	---- ---	2296 528
	D2-H, D2-P, Pocket Panel Shelf Trim	1	---- ---	---- ---	---- ---	---- ---	2273 496-7
	D3-L						
	(code 401) (well) (blue)	1	---- ---	---- ---	---- ---	---- ---	2178 408
	(code 404) (well) (black)	1	---- ---	---- ---	---- ---	---- ---	2178 409
	(code 405) (well) (red)	1	---- ---	---- ---	---- ---	---- ---	2178 410
	(code 401) (panel)	1	---- ---	---- ---	---- ---	---- ---	2132 086-7
	(code 404) (panel)	1	---- ---	---- ---	---- ---	---- ---	2132 088-9
	(code 405) (panel)	1	---- ---	---- ---	---- ---	---- ---	2132 090-1
	(code 401) (cover)	1	---- ---	---- ---	---- ---	---- ---	2132 092-3
	(code 404) (cover)	1	---- ---	---- ---	---- ---	---- ---	2132 094-5
	(code 405) (cover)	1	---- ---	---- ---	---- ---	---- ---	2132 096-7
	(code 401) (pocket shelf)	1	---- ---	---- ---	---- ---	---- ---	2132 080-1
	(code 404) (pocket shelf)	1	---- ---	---- ---	---- ---	---- ---	2132 082-3
	(code 405) (pocket shelf)	1	---- ---	---- ---	---- ---	---- ---	2132 084-5
23-113-2	WEATHERCORD, Door (order by color)						
	D3-L (blue)	★	2178 601	2178 601	2178 601	2178 601	2178 601
	(cocoa)	★	2178 602	2178 602	2178 602	2178 602	2178 602
	(gray)	★	2178 603	2178 603	2178 603	2178 603	2178 603
	(red)	★	2178 604	2178 604	2178 604	2178 604	2178 604
	D2-P (cover)	1	---- ---	---- ---	---- ---	---- ---	2296 538-9
23-113-30	WEATHERCORD, Door and Lock Pillar						
	D3-L (black)	★	---- ---	2163 695	2163 695	2163 695	2163 695
23-113-45	WEATHERCORD, Quarter Window Opening						
	D1, D2, (2 D.)						
	(codes 701, 711) (blue)	1	2249 692-3				
	(codes 703, 713) (cocoa)	1	2249 696-7				
	(code 712) (green)	1	2249 694-5				
	(codes 714, 704, 894) (gray)	1	2249 698-9				
23-113-50	WELT, Quarter Window Moulding (paint as required)						
	L1-L, L1-H, (2 D.)	2	2272 153				
	(w/shield side garnish moulding to instrument panel)						
	D3-L	2	1758 241	1758 241	1758 241	1758 241	1758 241
23-113-52	STRIP, Windshield Lower Inside						
	L1-P (plastic)						
	(code 651) (blue)	1	---- ---	---- ---	---- ---	2297 304	
	(code 652) (green)	1	---- ---	---- ---	---- ---	2297 305	
	(code 653) (cocoa)	1	---- ---	---- ---	---- ---	2297 306	
	(code 655) (red)	1	---- ---	---- ---	---- ---	2297 307	
23-113-84	WELT, Folding Top Header						
	D2-H (black)	1	---- ---	---- ---	---- ---	---- ---	*2432 150
	D2-P (beige)	1	---- ---	---- ---	---- ---	---- ---	2297 076
	D3-L (black)	★	---- ---	---- ---	---- ---	---- ---	2163 846

★ Indicates use as required.
Ⅱ Indicates parts not listed in any previous parts book.
March 8, 1963 Supersedes May 1, 1962.

Printed in U.S.A.
Prices and specifications subject to change without notice.
Right and left part numbers are on same line, first number is right, second number is left.
* Indicates change or addition.

MyMopar.com

CODE	REMARKS	PER CAR	SED.	SP. 4 D.	SUB.	SP. CL. CP.	CV. CP.
23-113-87	WELT, Quarter Trim Panel Retainer						
	L1-L, L1-H, D1, D2						
	(codes 631, 641) (blue)	★	---- ---	---- ---	2297 050		
	(code 632) (green)	★	---- ---	---- ---	2297 053		
	(code 633) (cocoa)	★	---- ---	---- ---	2297 054		
	(codes 635, 645) (red)	★	---- ---	---- ---	2297 052		
	(code 644) (gray)	★	---- ---	---- ---	2297 051		
	(flange cover)	★	2292 592	2292 592	---- ---	2292 592	
23-114-2	MATERIAL, Seat Cloth Trim						
	L1-L						
	(codes 611, 614, 615)	★	1874 244				
	D1-L, D2-L						
	(code 701) (blue)	★	2185 547				
	(code 703) (cocoa)	★	2185 548				
	(code 704) (gray)	★	2185 549				
	D1-M, D2-M						
	(code 711) (blue)	★	2185 315	---- ---	2185 315	2185 315	
	(code 712 (green)	★	2185 316				
	(code 713) (cocoa)	★	2185 317	---- ---	2185 317	2185 317	
	(code 714) (gray)	★	2185 318	---- ---	2185 318	2185 318	
	(code 715) (red)	★	2185 319	---- ---	2185 319	2185 319	
	D1-H, D2-H						
	(code 721) (blue)	★	2185 474				
	(code 722) (green)	★	2185 475				
	(code 723) (cocoa)	★	2185 476				
	(code 724) (gray)	★	2185 477				
	(code 725) (red)	★	2185 478				
	D3-L						
	(code 341)	★	⊟2186 165	⊟2186 165	---- ---	⊟2186 165	
	(code 343)	★	⊟2186 166	⊟2186 166	---- ---	⊟2186 166	
	(code 344)	★	⊟2186 167	⊟2186 167	---- ---	⊟2186 167	
	(code 345)	★	⊟2186 168	⊟2186 168	---- ---	⊟2186 168	
23-114-10	BINDING, (5/8" wire on)						
	D2-H, D2-P, D3-L (black)	1	---- ---	---- ---	---- ---	---- ---	2171 884
	D2-H, D3-L (white)	1	---- ---	---- ---	---- ---	---- ---	2177 529
	D2-P (black)	★	---- ---	---- ---	---- ---	---- ---	⊟2297 303
	(beige)	★	---- ---	---- ---	---- ---	---- ---	⊟2171 884
23-114-15	MATERIAL, Leather (Imitation)						
	L1-L (codes 611, 614, 615, 641, 644, 645)						
	(34-DA-22) (54")(1220-1 black)	★	2185 646	---- ---	2185 646		
	(32-CH-22) (54")(1410-1 gray)	★	1874 955	---- ---	1874 955		
	(28A-AM-22) (50")(1220-1 black)	★	1875 018	---- ---	1875 018		
	(28-AM-22) (50")(1410-1 gray)	★	1875 778	---- ---	1875 778		
	(25A-CV-22) (40")(1220-1 black)	★	2185 124	---- ---	2185 124		
	(25-CV-22) (40")(1410-1 gray)	★	2185 120	---- ---	2185 120		
	(21A-BE-22) (codes 611, 614, 615) (54")(1220-1 black)	★	2185 112				
	(21A-BE-22) (codes 641, 644, 645) (1410-1 gray)	★	---- ---	---- ---	2185 116		
	(21-BE-22) (codes 611, 614, 615) (54")(1410-1 gray)	★	2185 116				
	(21-BE-22) (codes 641, 644, 645) (54")(1220-1 black)	★	---- ---	---- ---	2185 112		
	(19-C-22) (codes 611, 641) (54") (blue)	★	2185 147	---- ---	2185 147		
	(19-C-22) (codes 614, 644) (54") (gray)	★	2185 149	---- ---	2185 149		
	(19-C-22) (codes 615, 645) (54") (red)	★	2185 151	---- ---	2185 151		

★ Indicates use as required.
⊟ Indicates parts not listed in any previous parts book.
Right and left part numbers are on same line, first number is right, second number is left.
* Indicates change or addition.

Printed in U.S.A.
Prices and specifications subject to change without notice.
March 8, 1963 Supersedes May 1, 1962.

MyMopar.com

CODE	REMARKS	PER CAR	SED.	SP. 4 D.	SUB.	SP. CL. CP.	CV. CP.
23-114-15	MATERIAL, Leather (Imitation) - Cont'd						
	L1-L (code 664)						
	(32-DG-22) (53")(1508-1 gray)	★	2185 360				
	(28A-CH-22) (50")(1508-1 gray)	★	2185 143				
	(28A-DA-22) (50")(1511 gray)	★	2185 154				
	(28-CH-22) (50")(1511 gray)	★	2185 154				
	(28-DA-22) (50")(1508-1 gray)	★	2185 143				
	(21-BE-61) (54")(1508-1 gray)	★	2185 410				
	(19-C-22) (54")(1508-1 gray)	★	2185 149				
	L1-L (code 694)						
	(32-CH-22) (54") (902 gray)	★	2185 336				
	(32-DA-22) (54")(902 gray)	★	2185 336				
	(19-C-22) (54")(1508-1 gray)	★	2185 149				
	(19-CT-22) (48")(902 gray)	★	2185 074				
	L1-H (codes 631, 671)						
	(28A-DA-22) (50")(1500 blue)	★	2185 152	---- ---	2185 152		
	(28-DA-22) (50")(1501-1 blue)	★	2185 141	---- ---	2185 141		
	(34-DB-22) (54")(1501-1 blue)	★	2185 259				
	(28A-CH-22) (50")(1500 blue)	★	2185 152	---- ---	2185 152		
	(32-CH-22) (54")(1501-1 blue)	★	2185 254	---- ---	2185 254		
	(21A-CM-22) (54")(1500 blue)	★	2185 372	---- ---	2185 372		
	(21-CM-22) (54")(1501-1 blue)	★	2185 354	---- ---	2185 354		
	(19-C-22) (54")(1501-1 blue)	★	2185 147	---- ---	2185 147		
	L1-H (code 632)						
	(28A-DA-22) (50")(1515 green)	★	2185 187	---- ---	2185 187		
	(28-DA-22) (50")(1506-1 green)	★	2185 163	---- ---	2185 163		
	(28A-CH-22) (50")(1515 green)	★	2185 187	---- ---	2185 187		
	(28-CH-22) (50")(1506-1 green)	★	2185 163	---- ---	2185 163		
	(21A-CM-22) (54")(1515 green)	★	2185 385	---- ---	2185 385		
	(21-CM-22) (54")(1506-1 green)	★	2185 361	---- ---	2185 361		
	(19-C-22) (54")(1506-1 green)	★	2185 167	---- ---	2185 167		
	L1-H (code 633)						
	(28A-DA-22) (50")(1503 beige)	★	2185 153	---- ---	2185 153		
	(28-DA-22) (50")(1504-1 cocoa)	★	2185 142	---- ---	2185 142		
	(28A-CH-22) (50")(1503 beige)	★	2185 153	---- ---	2185 153		
	(28-CH-22) (50")(1504-1 cocoa)	★	2185 142	---- ---	2185 142		
	(21A-CM-22) (54")(1503 beige)	★	2185 373	---- ---	2185 373		
	(21-CM-22) (54")(1504-1 cocoa)	★	2185 355	---- ---	2185 355		
	(19-C-22) (54")(1504-1 cocoa)	★	2185 148	---- ---	2185 148		
	L1-H (codes 635, 675)						
	(28A-DA-22) (50")(1511 gray)	★	2185 154	---- ---	2185 154		
	(28-DA-22) (50")(1509 red)	★	2185 150	---- ---	2185 150		
	(34-DB-22) (54")(1509 red)	★	2185 261				
	(28A-CH-22) (50")(1511 gray)	★	2185 154	---- ---	2185 154		
	(28-CH-22) (50")(1509 red)	★	2185 150	---- ---	2185 150		
	(21A-CM-22) (54")(1511 gray)	★	2185 374	---- ---	2185 374		
	(21-CM-22) (54")(1509 red)	★	2185 371	---- ---	2185 371		
	(19-C-22) (54")(1509 red)	★	2185 151	---- ---	2185 151		
	L1-P (code 651)						
	(32-CH-22) (54")(1501-1 blue)	★	---- ---	---- ---	---- ---	2185 254	
	(28-AM-22) (50")(1501-1 blue)	★	---- ---	---- ---	---- ---	2185 141	
	(19-C-22) (54")(1501-1 blue)	★	---- ---	---- ---	---- ---	2185 147	
	(19-DJ-22) (54")(1501-1 blue)	★	---- ---	---- ---	---- ---	2185 578	
	(18-AR-22) (54")(1501-1 blue)	★	---- ---	---- ---	---- ---	2186 063	
	L1-P (code 652)						
	(28-AM-22) (50")(1506-1 green)	★	---- ---	---- ---	---- ---	2185 163	
	(28-CH 22) (50")(1506-1 green)	★	---- ---	---- ---	---- ---	2185 163	
	(19-C-22) (54")(1506-1 green)	★	---- ---	---- ---	---- ---	2185 167	
	(19-DJ-22) (54")(1506-1 green)	★	---- ---	---- ---	---- ---	2185 579	
	(18-AR-22) (54")(1506-1 green)	★	---- ---	---- ---	---- ---	2186 064	

★ Indicates use as required.
⊟ Indicates parts not listed in any previous parts book.
March 8, 1963 Supersedes May 1, 1962.

Printed in U.S.A.
Prices and specifications subject to change without notice.
Right and left part numbers are on same line, first number is right, second number is left.
* Indicates change or addition.

MyMopar.com

CODE	REMARKS	PER CAR	SED.	SP. 4D.	SUB.	SP. CL. CP.	CV. CP.
23-114-15	MATERIAL, Leather (Imitation) - Cont'd						
	L1-P (code 653)						
	(28-CH-22) (50")(1504-1 cocoa)	★	---- ---	---- ---	---- ---	2185 142	
	(28-AM-22) (50")(1504-1 cocoa)	★	---- ---	---- ---	---- ---	2185 142	
	(19A-DJ-22) (54")(1504-1 cocoa)	★	---- ---	---- ---	---- ---	2185 544	
	(19-DJ-22) (54")(1504-1 cocoa)	★	---- ---	---- ---	---- ---	2185 544	
	(19-C-22) (54")(1504-1 cocoa)	★	---- ---	---- ---	---- ---	2185 148	
	(18-AR-22) (54")(1504-1 cocoa)	★	---- ---	---- ---	---- ---	2186 065	
	L1-P (code 655)						
	(28-CH-22) (50")(1509 red)	★	---- ---	---- ---	---- ---	2185 150	
	(28-AM-22) (50")(1509 red)	★	---- ---	---- ---	---- ---	2185 150	
	(19-DJ-22) (54")(1509 red)	★	---- ---	---- ---	---- ---	2185 545	
	(19-C-22) (54")(1509 red)	★	---- ---	---- ---	---- ---	2185 151	
	(18-AR-22) (54")(1509 red)	★	---- ---	---- ---	---- ---	2186 066	
	D1, D2, (codes 701, 711, 721, 801, 811, 821, 831, 841)						
	(32-DC-64) (56")(1501-1 blue)	★	2185 280	---- ---	2185 280		
	(32-DD-66) (58")(1500 blue)	★	2185 553	---- ---	2185 553		
	(30-A-22) (50")(1501-1 blue)	★	2185 141	2185 141	2185 141	2185 141	2185 141
	(28A-AM-22) (50")(1500 blue)	★	2185 152	2185 152	2185 152	2185 152	
	(28-AM-22) (50")(1501-1 blue)	★	2185 141	2185 141	2185 141	2185 141	2185 141
	(21A-CM-22) (54")(1500 blue)	★	2185 372	2185 372	2185 372	2185 372	
	(21-BE-22) (54")(1501-1 blue)	★	2185 375				
	(21-CM-22) (54")(1501-1 blue)	★	2185 354	2185 354	2185 354	2185 354	2185 354
	(19A-C-22) (54")(1516 white)	★	2185 329	---- ---	2185 329	2185 329	
	(19-C-22) (54")(1501-1 blue)	★	2185 147	2185 147	2185 147	2185 147	2185 147
	(19-DJ-22)(codes 701, 711, 801, 821, 831) (54")(1500 blue)	★	2185 600	---- ---	2185 600	2185 600	
	(19-DJ-22)(codes 721, 811, 844) (54")(1501-1 blue)	★	2185 578	2185 578	2185 578	2185 578	2185 578
	(18-T-16) (54")(1500 blue)	★	2185 331				
	D1, D2, (codes 703, 713, 723, 803, 813)						
	(32-DC-64) (56")(1504-1 cocoa)	★	2185 281	---- ---	2185 281		
	(32-DD-66) (58")(1503 beige)	★	2185 554	---- ---	2185 554		
	(30-A-22) (50")(1504-1 cocoa)	★	2185 142	2185 142	2185 142	2185 142	2185 142
	(28A-AM-22) (50")(1503 beige)	★	2185 153	---- ---	2185 153	2185 153	
	(28-AM-22) (50")(1504-1 cocoa)	★	2185 142	2185 142	2185 142	2185 142	2185 142
	(21A-CM-22) (54")(1503 beige)	★	2185 373	---- ---	2185 373	2185 373	
	(21-BE-22) (54")(1504-1 cocoa)	★	2185 376	---- ---	2185 376		
	(21-CM-22) (54")(1504-1 cocoa)	★	2185 355	2185 355	2185 355	2185 355	2185 355
	(19A-C-22) (54")(1516 white)	★	2185 329	2185 329	2185 329	2185 329	
	(19-C-22) (54")(1504-1 cocoa)	★	2185 148	2185 148	2185 148	2185 148	2185 148
	(19-DJ-22)(codes 703, 713, 803) (54")(1503 beige)	★	2185 601	---- ---	2185 601	2185 601	
	(19-DJ-22)(codes 723, 813) (54")(1504-1 cocoa)	★	2185 544	2185 544	2185 544	2185 544	2185 544
	D1, D2, (codes 704, 714, 724, 804, 814, 824, 834, 844)						
	(32-DC-64) (56")(1508-1 gray)	★	2185 282	---- ---	2185 282		
	(32-DD-66) (58")(1511 gray)	★	2185 555	---- ---	2185 555		
	(30-A-22) (50")(1508-1 gray)	★	2185 143	2185 143	2185 143	2185 143	2185 143
	(28A-AM-22) (50")(1511 gray)	★	2185 154	---- ---	2185 154	2185 154	
	(28-AM-22) (50")(1508-1 gray)	★	2185 143	2185 143	2185 143	2185 143	2185 143
	(21A-CM-22) (54")(1511 gray)	★	2185 374	---- ---	2185 374	2185 374	
	(21-BE-22) (54")(1508-1 gray)	★	2185 377	---- ---	2185 377		
	(21-CM-22) (54")(1508-1 gray)	★	2185 356	2185 356	2185 356	2185 356	2185 356
	(19A-C-22) (54")(1516 white)	★	2185 329	2185 329	2185 329	2185 329	
	(19-C-22) (54")(1508-1 gray)	★	2185 149	2185 149	2185 149	2185 149	2185 149

★ Indicates use as required.
⊟ Indicates parts not listed in any previous parts book.
Right and left part numbers are on same line, first number is right, second number is left.
* Indicates change or addition.

Printed in U.S.A.
Prices and specifications subject to change without notice.
March 8, 1963 Supersedes May 1, 1962.

MyMopar.com

CODE	REMARKS	PER CAR	SED.	SP. 4 D.	SUB.	SP. CL. CP.	CV. CP.
23-114-15	MATERIAL, Leather (Imitation) - Cont'd						
	D1- D2						
	(19-DJ-22)(codes 704, 714, 804, 824, 834) (54")(1511 gray)	★	2185 602	---- ---	2185 602	2185 602	
	(19-DJ-22)(codes 724, 814, 844) (54")(1508-1 gray)	★	2185 598	2185 598	2185 598	2185 598	2185 598
	D1, D2, (codes 712, 722, 812)						
	(30-A-22) (50")(1506-1 green)	★	2185 163	2185 163	2185 163	2185 163	2185 163
	(28A-AM-22) (50")(1515 green)	★	2185 187				
	(28-AM-22) (50")(1506-1 green)	★	2185 163	2185 163	2185 163	2185 163	2185 163
	(21A-CM-22) (54")(1515 green)	★	2185 385				
	(21-CM-22) (54")(1506-1 green)	★	2185 361	2185 361	2185 361	2185 361	2185 361
	(19A-C-22) (54")(1516 white)	★	2185 329	2185 329	2185 329	2185 329	
	(19-C-22) (54")(1506-1 green)	★	2185 167	2185 167	2185 167	2185 167	2185 167
	D1, D2						
	(19-DJ-22) (code 712) (54")(1515 green)	★	2185 603	---- ---	2185 603	2185 603	
	(19-DJ-22) (codes 722, 812) (54")(1506-1 green)	★	2185 579	2185 579	2185 579	2185 579	2185 579
	D1, D2 (codes 715, 725, 815, 865)						
	(32-CD-64) (56")(1509 red)	★	---- ---	---- ---	⊟2186 079		
	(30-A-22) (50")(1509 red)	★	2185 150	2185 150	2185 150	2185 150	2185 150
	(28A-AM-22) (50")(1509 red)	★	2185 150	---- ---	2185 150	2185 150	
	(28-AM-22) (50")(1509 red)	★	2185 150	2185 150	2185 150	2185 150	2185 150
	(21A-CM-22) (54")(1509 red)	★	2185 371	---- ---	2185 371	2185 371	
	(21-CM-22) (54")(1509 red)	★	2185 371	---- ---	2185 371	2185 371	2185 371
	(19A-C-22) (54")(1516 white)	★	2185 329	---- ---	2185 329	2185 329	
	(19-C-22) (54")(1509 red)	★	2185 151	2185 151	2185 151	2185 151	2185 151
	(19-DJ-22) (54")(1509 red)	★	2185 545	2185 545	2185 545	2185 545	2185 545
	D1, D2, (code 894)						
	(37-CX-22) (50")(902 gray)	★	2185 119				
	(19A-C-22) (54")(1508-1 gray)	★	2185 149				
	(19-C-22) (54")(902 gray)	★	2185 001				
	(19-DJ-22) (54")(902 gray)	★	2185 599				
	D2-P (codes 851, 852, 853, 855, 856)						
	(28A-AM-22) (50")						
	(code 851) (1501-1 blue)	★	---- ---	---- ---	---- ---	2185 141	2185 141
	(code 852) (1506-1 green)	★	---- ---	---- ---	---- ---	2185 163	2185 163
	(code 853) (1504-1 cocoa)	★	---- ---	---- ---	---- ---	2185 142	2185 142
	(code 855) (1509 red)	★	---- ---	---- ---	---- ---	2185 150	2185 150
	(code 856) (415 black)	★	---- ---	---- ---	---- ---	1831 003	1831 003
	(28-AM-22) (50")(1543 beige)	★	---- ---	---- ---	---- ---	2185 566	2185 566
	(21A-CM-22) (54")						
	(code 851) (1501-1 blue)	★	---- ---	---- ---	---- ---	2185 354	2185 354
	(code 852) (1506-1 green)	★	---- ---	---- ---	---- ---	2185 361	2185 361
	(code 853) (1504-1 cocoa)	★	---- ---	---- ---	---- ---	2185 355	2185 355
	(code 855) (1509 red)	★	---- ---	---- ---	---- ---	2185 371	2185 371
	(code 856) (415 black)	★	---- ---	---- ---	---- ---	1875 903	1875 903
	(19-C-22) (54")(1543 beige)	★	---- ---	---- ---	---- ---	2185 567	2185 567
	(19-DJ-22) (54")(1543 beige)	★	---- ---	---- ---	---- ---	2185 604	2185 604
	D3-L (codes 301, 341, 401)						
	(28-AM-46) (50")(1501-1 blue)	★	---- ---	---- ---	*2185 177	---- ---	*2185 177
	(28-AM-22) (50")(1501-1 blue)	★	2185 141	2185 141	---- ---	2185 141	
	(19-DJ-22) (54")(1501-1 blue)	★	*2185 578	---- ---	2185 578	---- ---	*2185 578
	(19A-C-22) (54")(1501-1 blue)	★	2185 147	2185 147	---- ---	2185 147	
	(19B-C-22) (54")(1502-1 blue)	★	2185 164	---- ---	2185 164	---- ---	2185 164
	(19-C-22) (54")(1501-1 blue)	★	2185 147	2185 147	---- ---	2185 147	

★ Indicates use as required.
⊟ Indicates parts not listed in any previous parts book.
March 8, 1963 Supersedes May 1, 1962.

Printed in U.S.A.
Prices and specifications subject to change without notice.
Right and left part numbers are on same line, first number is right, second number is left.
* Indicates change or addition.

MyMopar.com

CODE	REMARKS	PER CAR	SED.	SP. 4 D.	SUB.	SP. CL. CP.	CV. CP.
23-114-15	MATERIAL, Leather (Imitation) - Cont'd D3-L						
	(codes 303, 343, 403)						
	(28-AM-46) (50")(1504-1 cocoa)	★	---- ---	---- ---	*2185 518	---- ---	*2185 518
	(28-AM-22) (50")(1504-1 cocoa)	★	2185 142	2185 142	2185 142	2185 142	
	(19A-C-22) (54")(1516 white)	★	---- ---	---- ---	2185 329	---- ---	---- ---
	(19B-C-22) (54")(415 black)	★	1874 974	1874 974	1874 974	1874 974	1874 974
	(19-C-22) (54")(1504-1 cocoa)	★	2185 148	2185 148	2185 148	---- ---	2185 148
	(codes 304, 344, 404)						
	(28-AM-46) (50")(1220-1 black)	★	---- ---	*1875 822	*1875 822		
	(28-AM-22) (50")(1508-1 gray)	★	---- ---	1875 018	1875 018	1875 018	1875 018
	(code 304) (1508-1 gray)	★	2185 143	2185 143	---- ---	2185 143	
	(19-DJ-22) (54")(1508-1 gray)	★	---- ---	2185 841	---- ---	2185 841	
	(19A-C-22) (54")(1511 gray)	★	2185 157	2185 157	2185 329	2185 157	2185 157
	(19B-C-22) (54")(415 black)	★	1874 974	1874 974	1874 974	1874 974	1874 974
	(19-C-22) (54")(1508-1 gray)	★	2185 149	2185 149	---- ---	2185 149	
	(code 404) (1220-1 black)	★	---- ---	1874 975	1874 975	---- ---	1874 975
	(codes 305, 345, 405)						
	(19-C-22) (54")(1509 red)	★	---- ---	*2185 151	---- ---	*2185 151	*2185 151
	(19A-C-22) (54")(1509 red)	★	---- ---	1874 974	---- ---	2185 151	
	(19-DJ-22) (54")(1509 red)	★	---- ---	---- ---	---- ---	2185 545	2185 369
23-115-4	NUT, Front Seat Cushion to Back Mounting L1, D1, D2	4	---- ---	---- ---	---- ---	1918 296	1918 296
	PUSHNUT	2	*2160 648	*2160 648	*2160 648	*2160 648	*2160 648
23-115-5	WASHER, Front Seat Center Arm Rest Trim L1, D1, D2	2	1918 299	1918 299	1918 299	1918 299	1918 299
23-115-6	SCREW, Front Seat Cushion to Back Mounting L1, D1, D2	4	---- ---	---- ---	---- ---	1918 587	1918 587
	FASTENER, Dust Boot	21	---- ---	---- ---	---- ---	---- ---	*2094 394
23-115-10	SCREW, Front Seat Center Arm Rest to Cushion Mounting D1, D2	2	2092 212	2092 212	2092 212	2092 212	2092 212

NOTES

★ Indicates use as required.
⊟ Indicates parts not listed in any previous parts book.
Right and left part numbers are on same line, first number is right, second number is left.
* Indicates change or addition.

Printed in U.S.A.
Prices and specifications subject to change without notice.
March 8, 1963.

MyMopar.com

CODE	REMARKS	PER CAR	SED.	SP. 4 D.	SUB.	SP. CL. CP.	CV. CP.

NOTES

★ Indicates use as required.
⊟ Indicates parts not listed in any previous parts book.
March 8, 1963.

Printed in U.S.A.
Prices and specifications subject to change without notice.
* Indicates change or addition.

MyMopar.com

1962 PLYMOUTH

INTERIOR TRIM

HOW TO USE INTERIOR TRIM ILLUSTRATIONS

The illustrations in this section are actual and each body style showing the Interior Trim is included.

The letters shown on the illustration indicate the description of the part and the part type code when referred to the legend which appears preceding the listing of the parts. The letters are consistent throughout the illustrations as "A" is always a Door Trim Panel, Code 23-92-5.

The numbers on the illustration indicate the distribution of material and type of material used. The numbers may vary with each illustration. The legend appears on the illustration.

For complete information on "How to Order" Trim Parts, see Mopar Parts Price List.

MyMopar.com

1962 PLYMOUTH - S SERIES

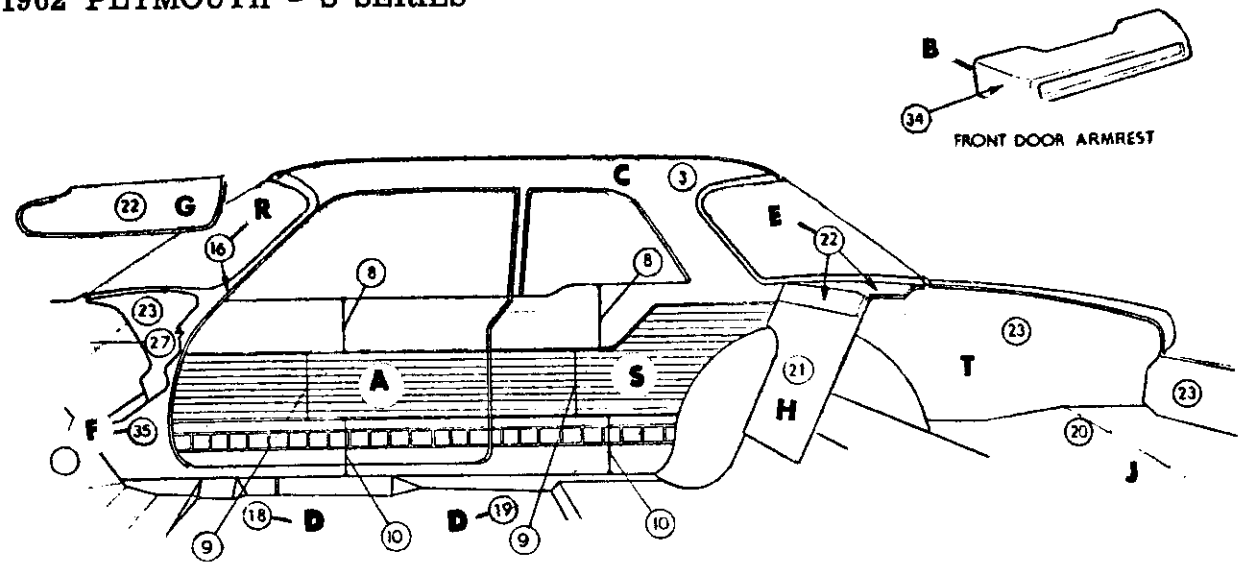

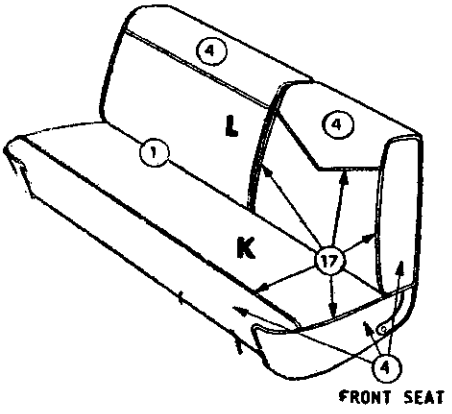

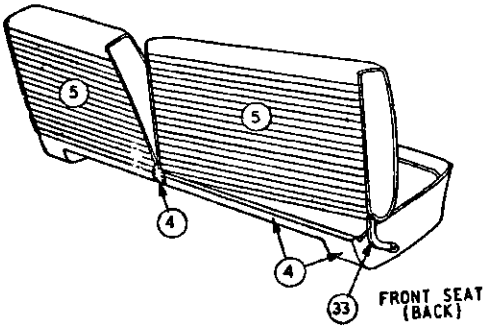

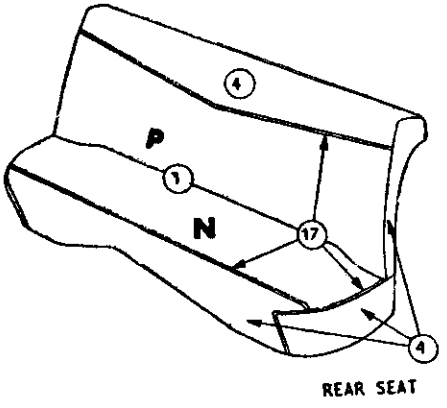

DISTRIBUTION OF MATERIAL

1	BODY CLOTH	I
3	HEADLINING	
4	IMITATION LEATHER	28-AM-22
5	IMITATION LEATHER	21-CZ-22
8	IMITATION LEATHER	19-DJ-22
9	IMITATION LEATHER	.012-L-22
10	IMITATION LEATHER	.012A-L-22
16	LACE	
17	EXTRUDED VINYL	
18	FLOOR COVERING-FRONT-RUBBER	
19	FLOOR COVERING-REAR-RUBBER	
20	FLOOR COVERING-LUGG. COMPT. RUBBER	
21	CARDBOARD	
22	EMBOSSED CARDBOARD	
23	PAINT	
27	MOULDED RESIN	
33	PLASTIC	
35	POLYETHLENE	

Distribution Drawing Legend Page Appears Following Illustration Section

Codes 101, 103, 104

SPL-211 1962 PLYMOUTH SP1-L, SP2-L 2 DOOR SEDAN
CLOTH AND IMITATION LEATHER COMBINATION

MyMopar.com

1962 PLYMOUTH - S SERIES

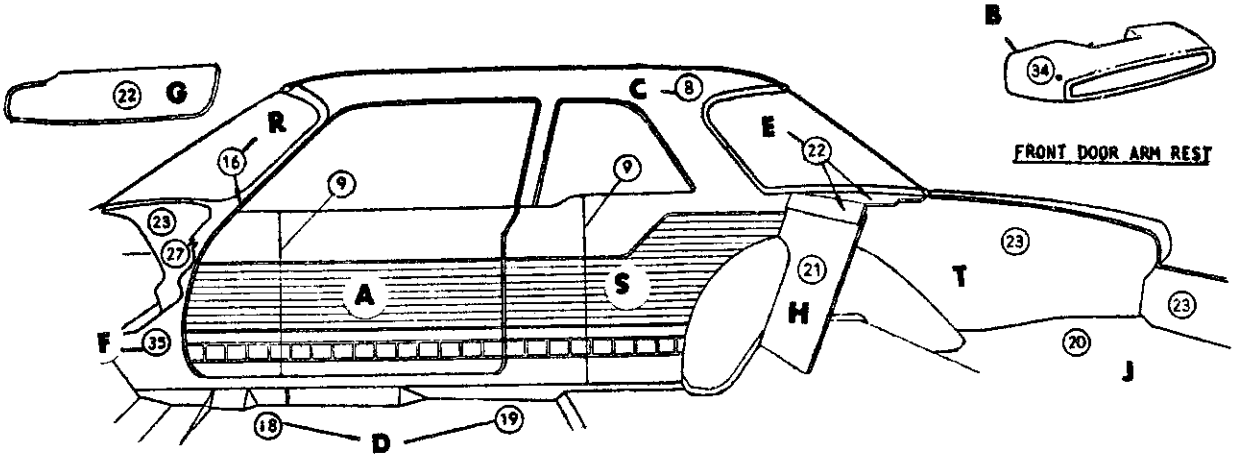

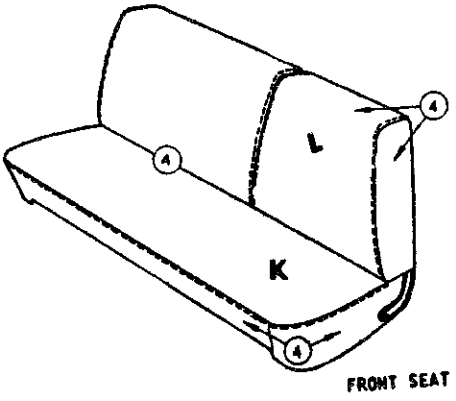

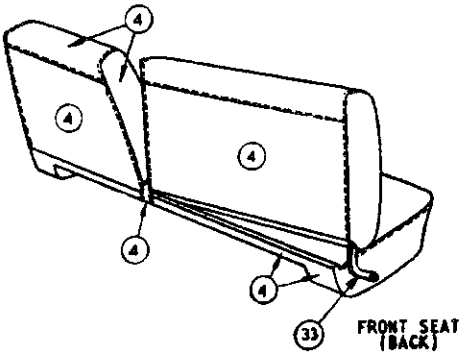

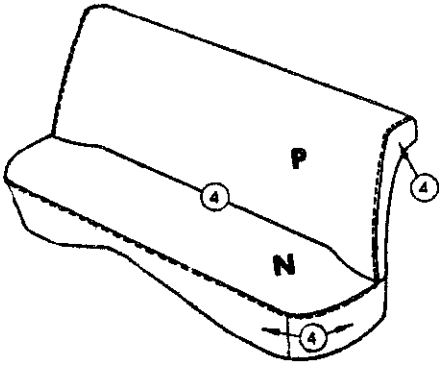

DISTRIBUTION OF MATERIAL

4	IMITATION LEATHER	37-CX-22
8	IMITATION LEATHER	18-T-16
9	IMITATION LEATHER	19-DJ-22
16	LACE	
18	FLOOR COVERING-FRONT-RUBBER	
19	FLOOR COVERING-REAR-RUBBER	
20	FLOOR COVERING-LUGG. COMPT. RUBBER	
21	CARDBOARD	
22	EMBOSSED CARDBOARD	
23	PAINT	
27	MOULDED RESIN	
33	PLASTIC	
34	PLASTISOL	
35	POLYETHLENE	

Distribution Drawing Legend Page Appears Following Illustration Section

Code 294

SPL-214A

1962 PLYMOUTH SP1-L, SP2-L, SP1-M, SP2-M CLUB SEDAN IMITATION LEATHER

MyMopar.com

1962 PLYMOUTH - S SERIES

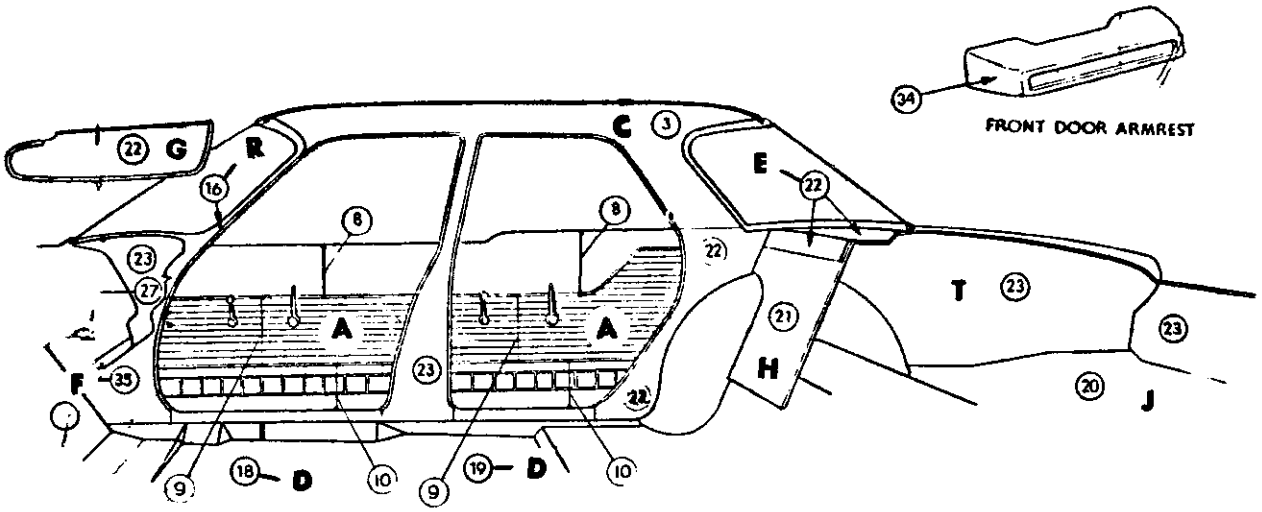

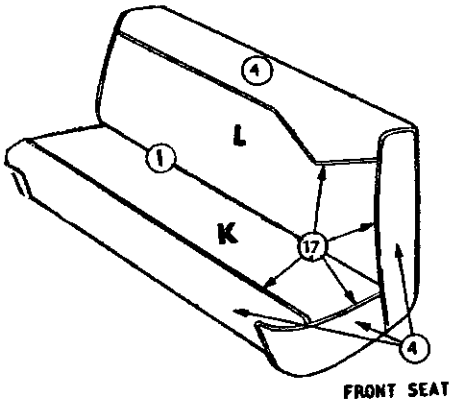

FRONT SEAT

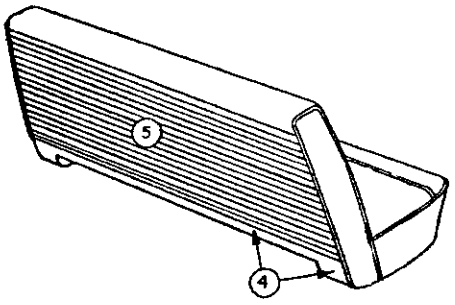

FRONT SEAT (BACK)

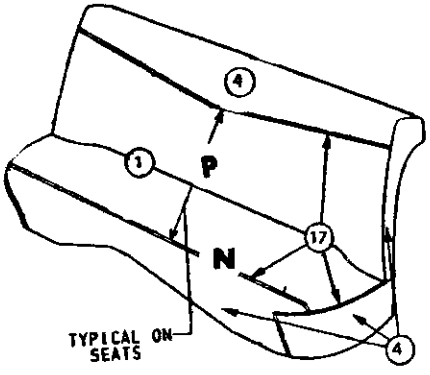

REAR SEAT

DISTRIBUTION OF MATERIAL

1	BODY CLOTH 1	
3	HEADLINING	
4	IMITATION LEATHER	28-AM-22
5	IMITATION LEATHER	21-CZ-22
8	IMITATION LEATHER	19-DJ-22
9	IMITATION LEATHER	.012-L-22
10	IMITATION LEATHER	.012A-L-22
16	LACE	
17	EXTRUDED VINYL	
18	FLOOR COVERING-FRONT-RUBBER	
19	FLOOR COVERING-REAR-RUBBER	
20	FLOOR COVERING-LUGG. COMPT. RUBBER	
21	CARDBOARD	
22	EMBOSSED CARDBOARD	
23	PAINT	
34	PLASTISOL	
35	POLYETHLENE	

Distribution Drawing Legend Page Appears Following Illustration Section

Codes 101, 103, 104

SPL-411 **1962 PLYMOUTH SP1-L, SP2-L 4 DOOR SEDAN CLOTH AND IMITATION LEATHER COMBINATION**

MyMopar.com

1962 PLYMOUTH - S SERIES

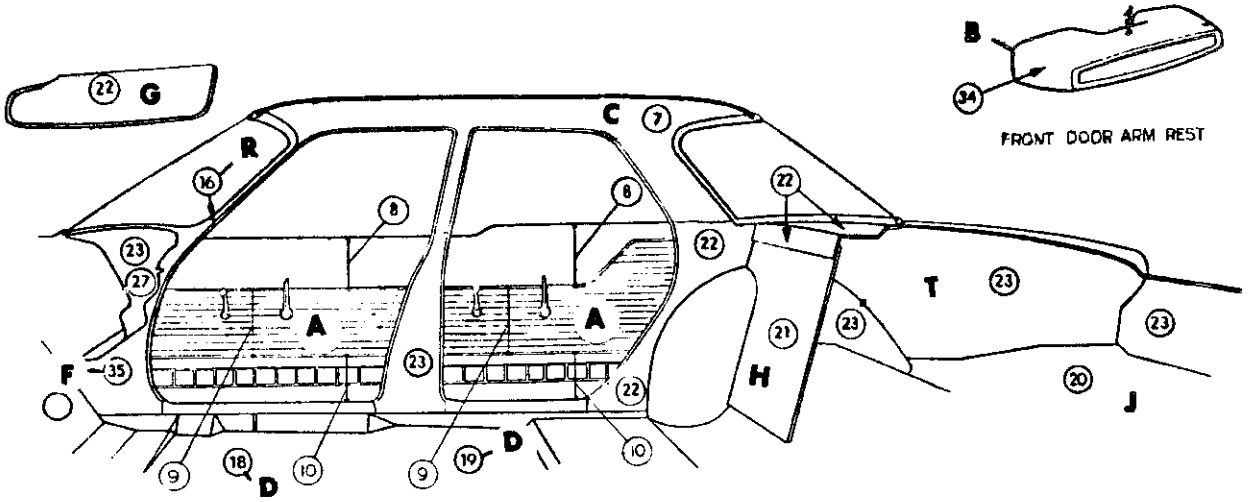

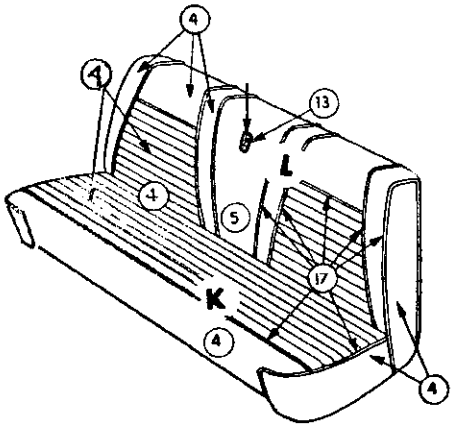

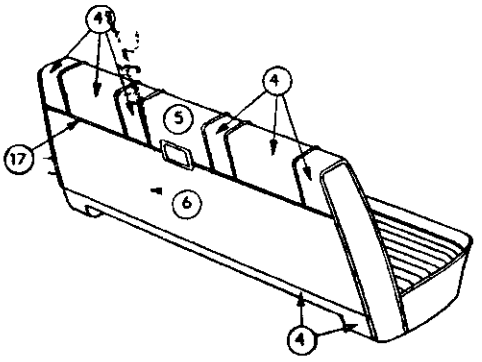

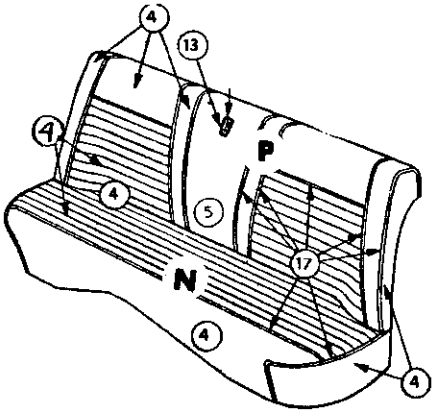

DISTRIBUTION OF MATERIAL

3	HEADLINING	
4	IMITATION LEATHER	28-AM-22
5	IMITATION LEATHER	28A-AM-22
6	IMITATION LEATHER	19-C-22
7	IMITATION LEATHER	18-T-16
8	IMITATION LEATHER	19-DJ-22
9	IMITATION LEATHER	.012-L-22
10	IMITATION LEATHER	.012A-L-22
13	IMITATION LEATHER	.017-L-22
16	LACE	
18	FLOOR COVERING-FRONT-RUBBER	
19	FLOOR COVERING-REAR-RUBBER	
20	FLOOR COVERING-LUGG. COMPT. RUBBER	
21	CARDBOARD	
22	EMBOSSED CARDBOARD	
23	PAINT	
34	PLASTISOL	
35	POLYETHLENE	

Distribution Drawing Legend Page Appears Following Illustration Section

Codes 211, 214

SPL-414 1962 PLYMOUTH SP1-L, SP2-L 4 DOOR SEDAN IMITATION LEATHER COMBINATION

MyMopar.com

1962 PLYMOUTH - S SERIES

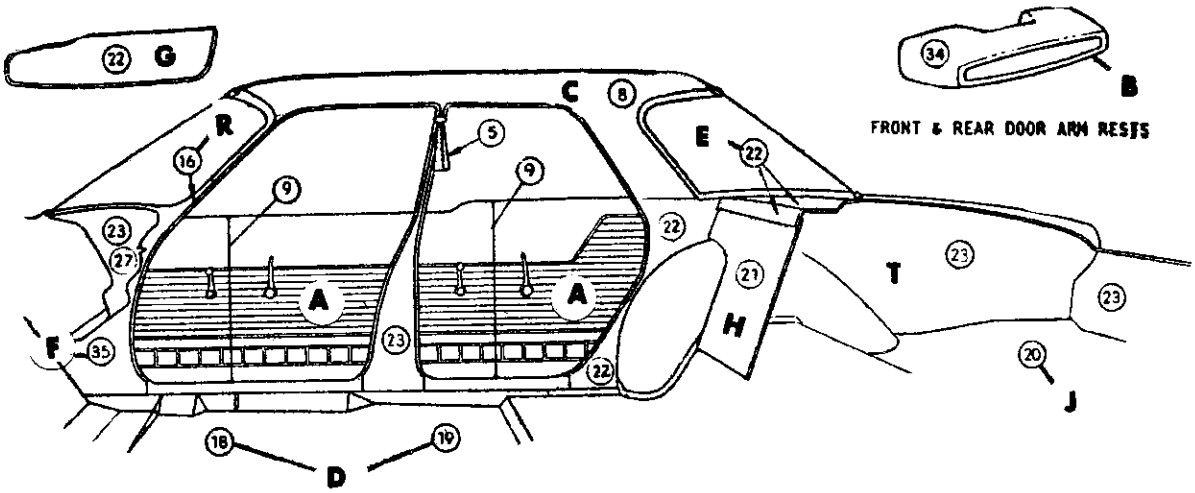

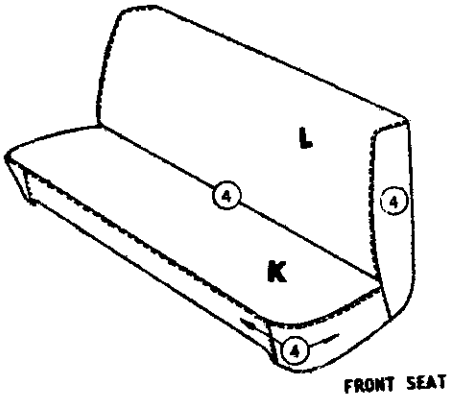

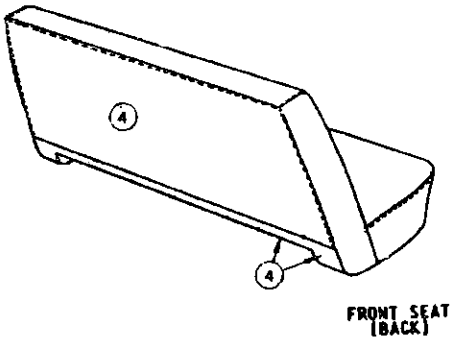

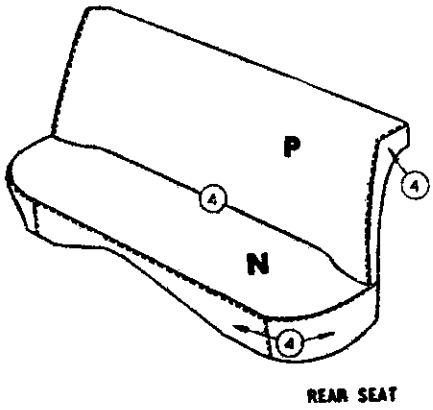

DISTRIBUTION OF MATERIAL

4	IMITATION LEATHER	37-CX-22
5	IMITATION LEATHER	19-C-22
8	IMITATION LEATHER	18-T-16
9	IMITATION LEATHER	19-DJ-22
16	LACE	
18	FLOOR COVERING-FRONT-RUBBER	
19	FLOOR COVERING-REAR-RUBBER	
20	FLOOR COVERING-LUGG COMPT RUBBER	
21	CARDBOARD	
22	EMBOSSED CARDBOARD	
23	PAINT	
27	MOULDED RESIN	
34	PLASTISOL	
35	POLYETHLENE	

Distribution Drawing Legend Page Appears Following Illustration Section

Code 294

SPL-414A

1962 PLYMOUTH SP1-L, SP2-L, SP1-M, SP2-M 4 DOOR SEDAN IMITATION LEATHER

MyMopar.com

1962 PLYMOUTH - S SERIES

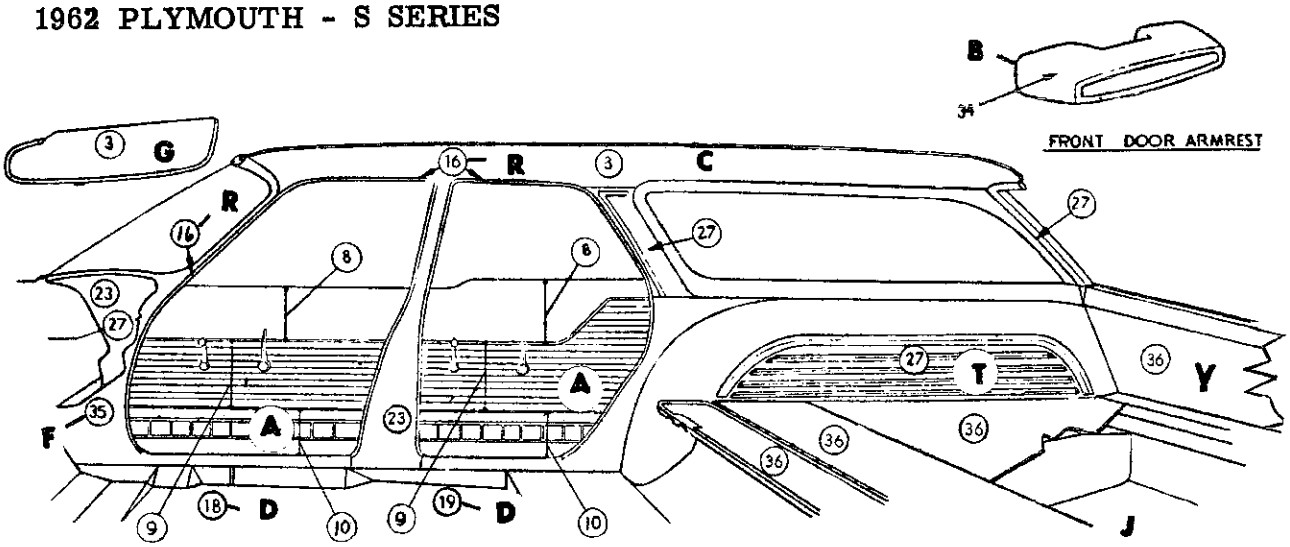

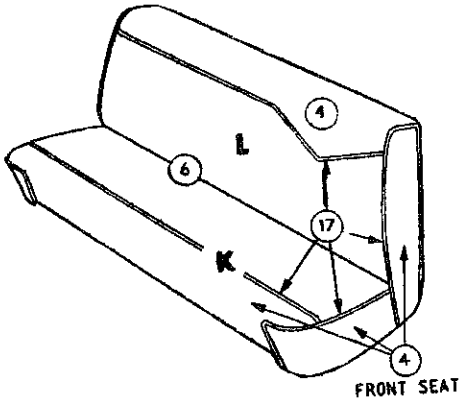

FRONT SEAT

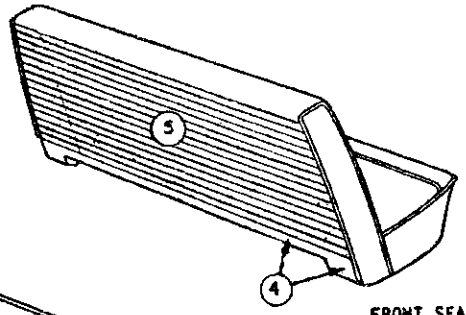

FRONT SEAT (BACK)

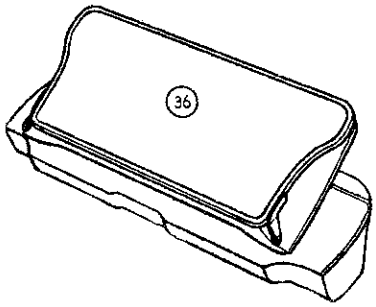

2ND SEAT (BACK)

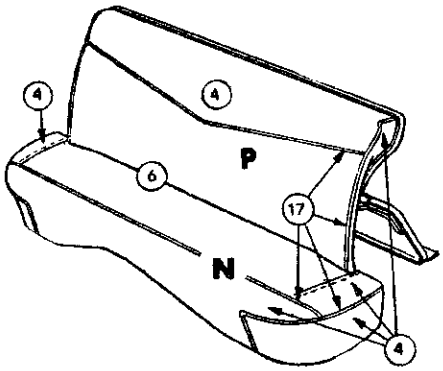

2ND SEAT

DISTRIBUTION OF MATERIAL

3	HEADLINING - HARDBOARD	
4	IMITATION LEATHER	38-AM-22
5	IMITATION LEATHER	21-CZ-22
6	IMITATION LEATHER	31-DC-63
8	IMITATION LEATHER	19-DJ-22
9	IMITATION LEATHER	.012-L-22
10	IMITATION LEATHER	.012A-L-22
16	LACE	
17	EXTRUDED VINYL	
18	FLOOR COVERING-FRONT-RUBBER	
19	FLOOR COVERING-REAR-RUBBER	
23	PAINT	
27	MOULDED RESIN	
35	POLYETHLENE	
36	VINOLEUM	

Distribution Drawing Legend Page Appears Following Illustration Section

Codes 201, 203, 204

SPL-454 1962 PLYMOUTH SP1-L, SP2-L 4 DOOR STATION WAGON IMITATION LEATHER COMBINATION

MyMopar.com

1962 PLYMOUTH - S SERIES

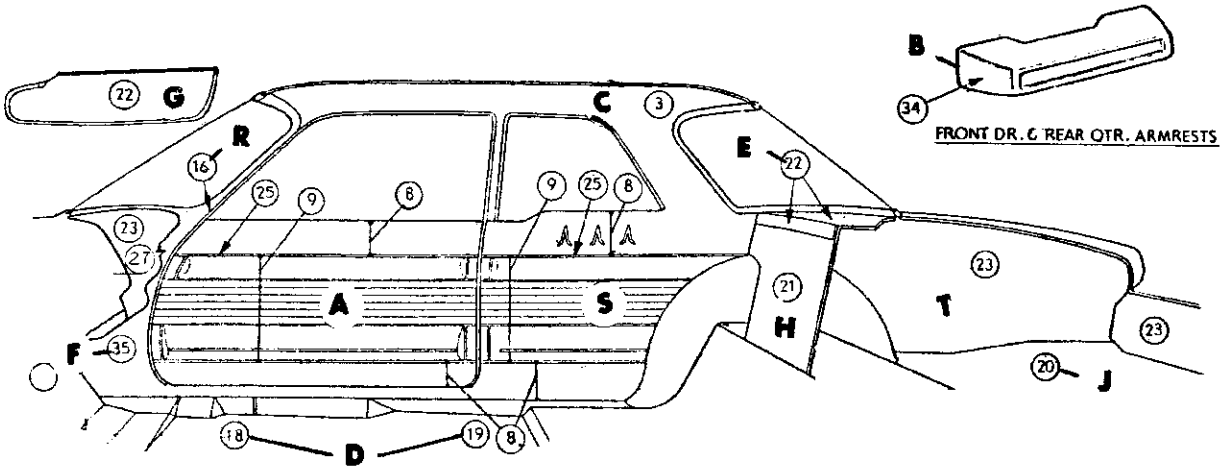

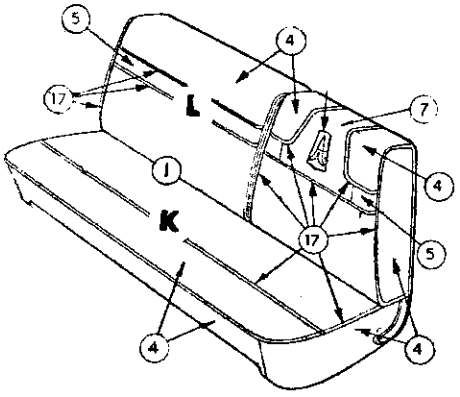

FRONT SEAT

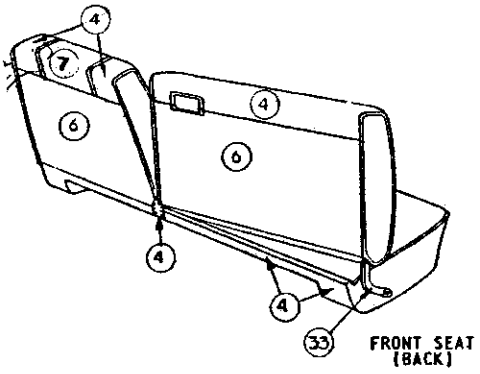

FRONT SEAT (BACK)

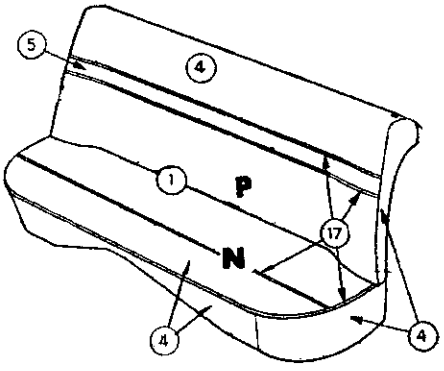

REAR SEAT

DISTRIBUTION OF MATERIAL

1	BODY CLOTH	1
3	HEADLINING	
4	IMITATION LEATHER	28-AM-22
5	IMITATION LEATHER	28A-AM-22
6	IMITATION LEATHER	19-C-22
7	IMITATION LEATHER	49-DH-22
8	IMITATION LEATHER	19-DJ-22
9	IMITATION LEATHER	.012-L-22
16	LACE	
17	EXTRUDED VINYL	
18	FLOOR COVERING-FRONT-RUBBER	
19	FLOOR COVERING-REAR-RUBBER	
20	FLOOR COVERING-LUGG. COMPT. RUBBER	
21	CARDBOARD	
22	EMBOSSED CARDBOARD	
23	PAINT	
25	MOULDING	
27	MOULDED RESIN	
33	PLASTIC	
35	POLYETHLENE	

Distribution Drawing Legend Page Appears Following Illustration Section

Codes 111, 112, 113, 114, 115

SPM-211 1962 PLYMOUTH SP1-M, SP2-M 2 DOOR SEDAN
CLOTH AND IMITATION LEATHER COMBINATION

MyMopar.com

1962 PLYMOUTH - S SERIES

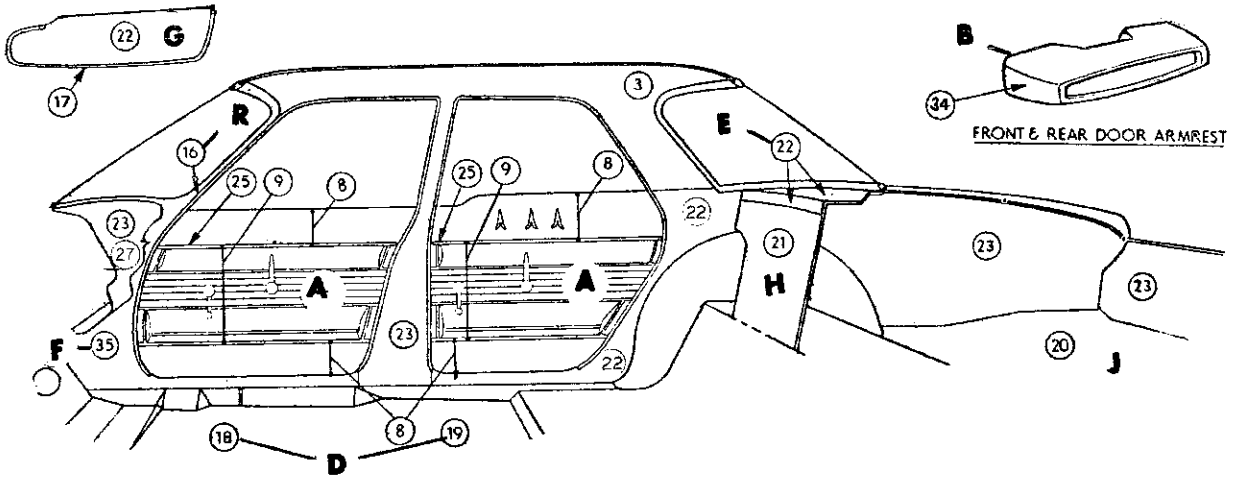

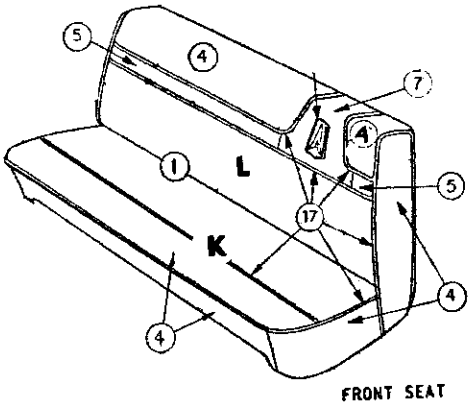

FRONT SEAT

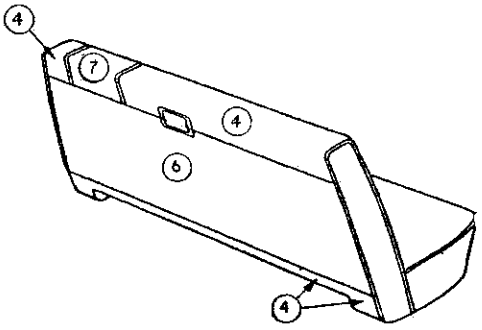

FRONT SEAT (BACK)

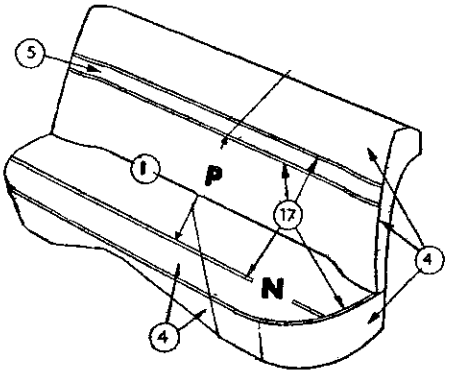

REAR SEAT

DISTRIBUTION OF MATERIAL

1	BODY CLOTH I	
3	HEADLINING	
4	IMITATION LEATHER	28-AM-22
5	IMITATION LEATHER	28A-AM-22
6	IMITATION LEATHER	19-C-22
7	IMITATION LEATHER	49-DH-22
8	IMITATION LEATHER	19-DJ-22
9	IMITATION LEATHER	.012-L-22
16	LACE	
17	EXTRUDED VINYL	
18	FLOOR COVERING-FRONT-RUBBER	
19	FLOOR COVERING-REAR-RUBBER	
20	FLOOR COVERING-LUGG. COMPT.	
21	CARDBOARD	
22	EMBOSSED CARDBOARD	
23	PAINT	
25	MOULDING	
27	MOULDED RESIN	
34	PLASTISOL	
35	POLYETHLENE	

Distribution Drawing Legend Page Appears Following Illustration Section

Codes 111, 112, 113, 114, 115

SPM-411 **1962 PLYMOUTH SP1-M, SP2-M 4 DOOR SEDAN CLOTH AND IMITATION LEATHER COMBINATION**

MyMopar.com

1962 PLYMOUTH - S SERIES

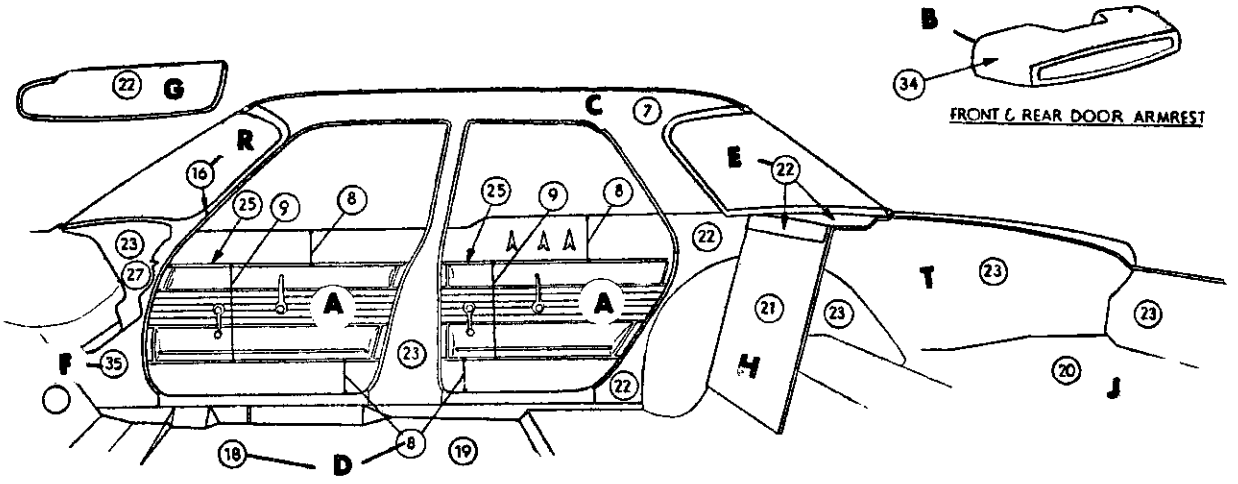

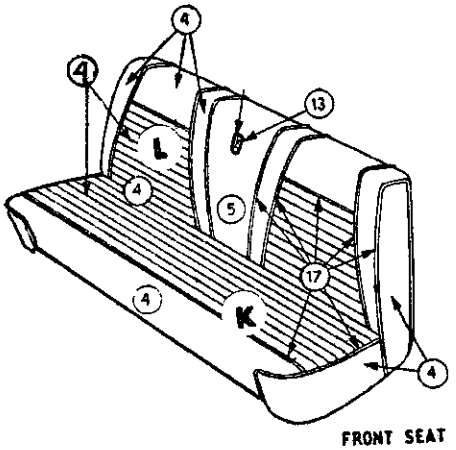

FRONT SEAT

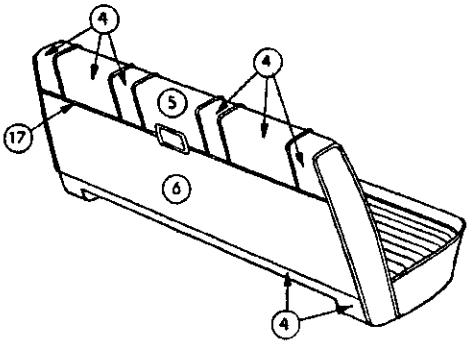

FRONT SEAT (BACK)

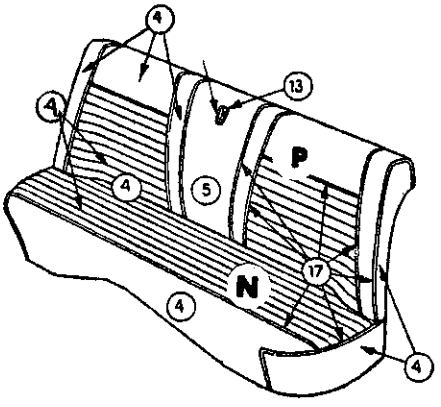

REAR SEAT

DISTRIBUTION OF MATERIAL

4	IMITATION LEATHER	28-AM-22
5	IMITATION LEATHER	28A-AM-22
6	IMITATION LEATHER	19-C-22
7	IMITATION LEATHER	18-T-16
8	IMITATION LEATHER	19-DJ-22
9	IMITATION LEATHER	.014-L-22
13	IMITATION LEATHER	.017-L-22
16	LACE	
17	EXTRUDED VINYL	
18	FLOOR COVERING-FRONT-RUBBER	
19	FLOOR COVERING-REAR-RUBBER	
20	FLOOR COVERING-LUGG. COMPT. RUBBER	
21	CARDBOARD	
22	EMBOSSED CARDBOARD	
23	PAINT	
24	METAL	
25	MOULDING	
34	PLASTISOL	
35	POLYETHLENE	

Distribution Drawing Legend Page Appears Following Illustration Section

Codes 231, 234

SPM-414 1962 PLYMOUTH SP1-M, SP2-M 4 DOOR SEDAN
IMITATION LEATHER COMBINATION

MyMopar.com

1962 PLYMOUTH - S SERIES

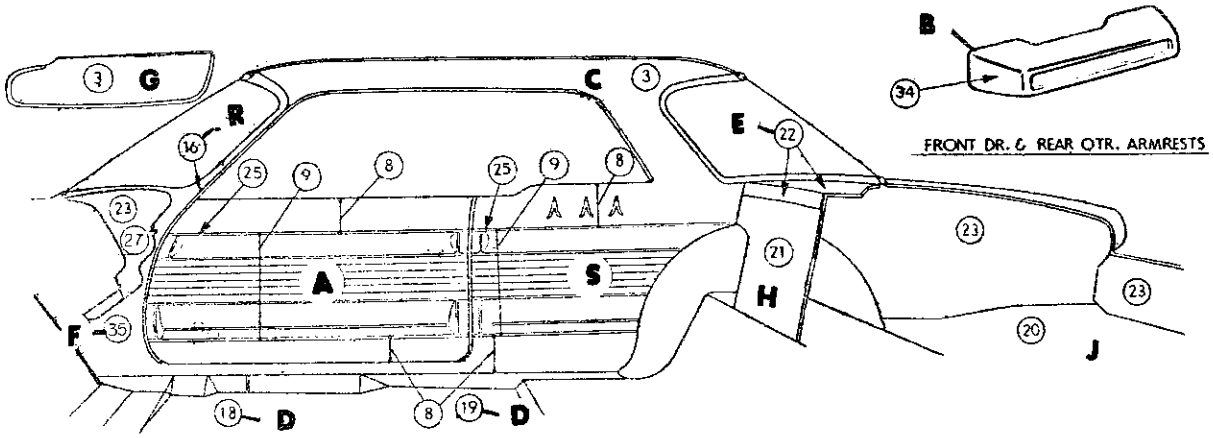

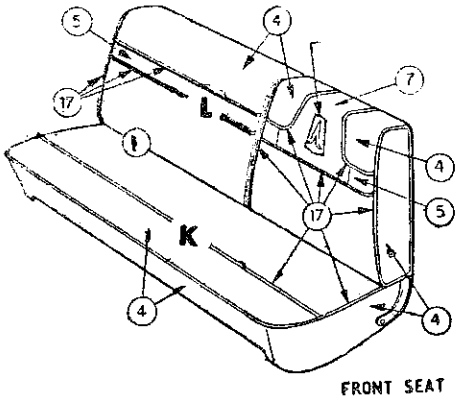

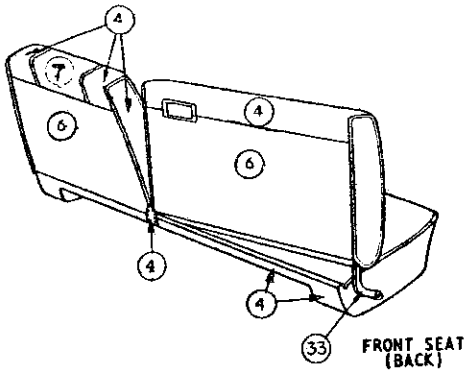

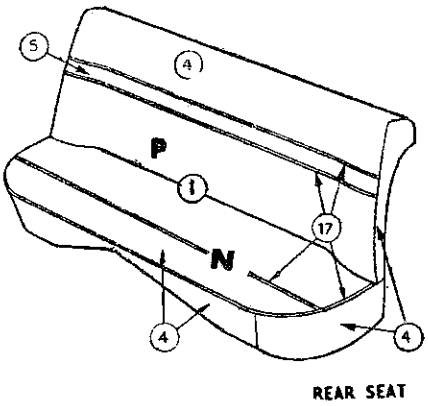

DISTRIBUTION OF MATERIAL

1	BODY CLOTH 1	
3	HEADLINING - HARDBOARD	
4	IMITATION LEATHER	28-AM-22
5	IMITATION LEATHER	28A-AM-22
6	IMITATION LEATHER	19-C-22
7	IMITATION LEATHER	49-DH-22
8	IMITATION LEATHER	19-DJ-22
9	IMITATION LEATHER	.012-L-22
16	LACE	
17	EXTRUDED VINYL	
18	FLOOR COVERING-FRONT-RUBBER	
19	FLOOR COVERING-REAR-RUBBER	
20	FLOOR COVERING-LUGG. COMPT. RUBBER	
21	CARDBOARD	
22	EMBOSSED CARDBOARD	
23	PAINT	
25	MOULDING	
27	MOULDED RESIN	
33	PLASTIC	
35	POLYETHLENE	

Distribution Drawing Legend Page Appears Following Illustration Section

Codes 111, 112, 113, 114, 115

SPM-231 1962 PLYMOUTH SP1-M, SP2-M 2 DOOR HARD TOP CLOTH AND IMITATION LEATHER COMBINATION

MyMopar.com

1962 PLYMOUTH - S SERIES

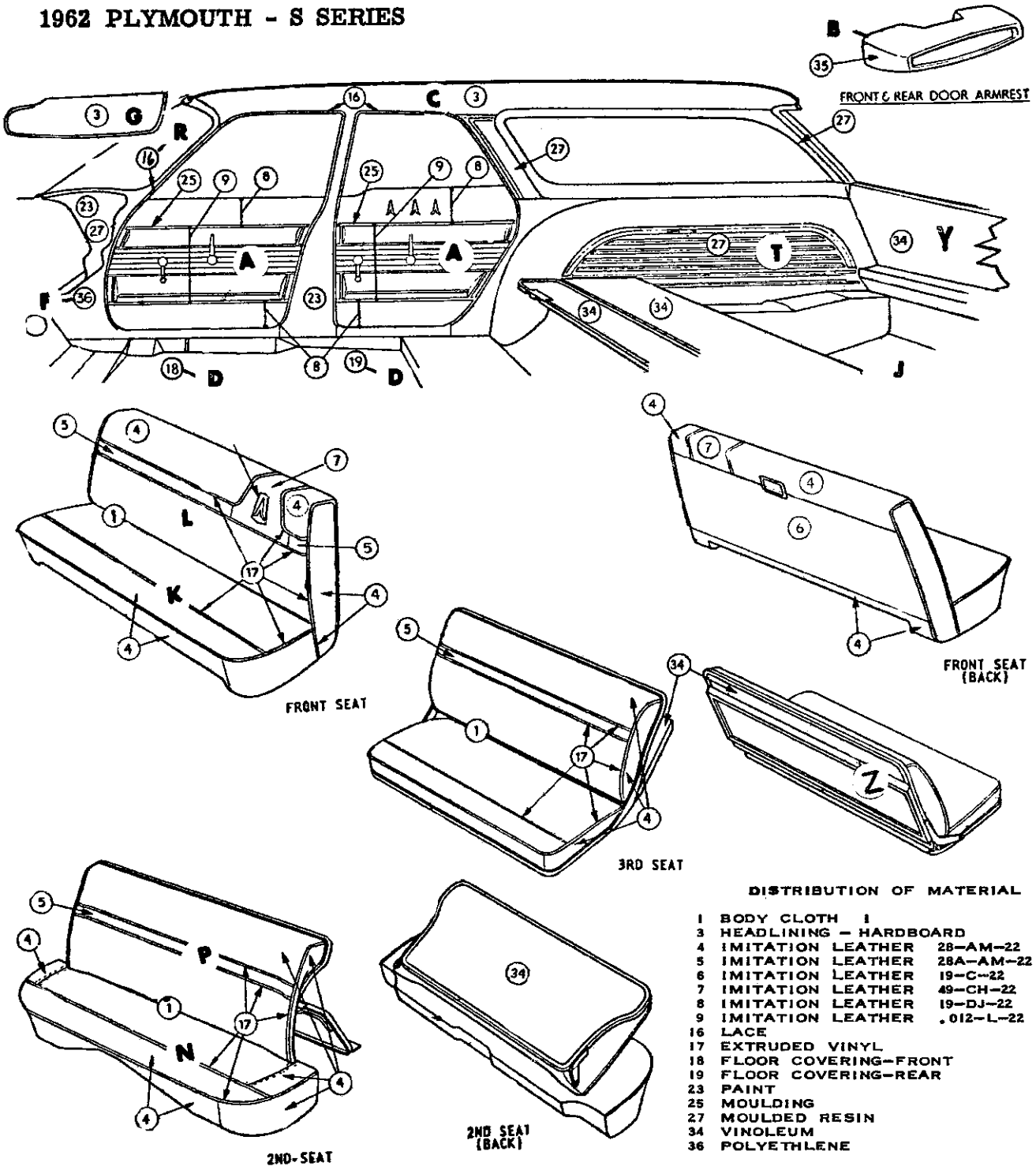

DISTRIBUTION OF MATERIAL

1	BODY CLOTH 1	
3	HEADLINING – HARDBOARD	
4	IMITATION LEATHER	28–AM–22
5	IMITATION LEATHER	28A–AM–22
6	IMITATION LEATHER	19–C–22
7	IMITATION LEATHER	49–CH–22
8	IMITATION LEATHER	19–DJ–22
9	IMITATION LEATHER	.012–L–22
16	LACE	
17	EXTRUDED VINYL	
18	FLOOR COVERING–FRONT	
19	FLOOR COVERING–REAR	
23	PAINT	
25	MOULDING	
27	MOULDED RESIN	
34	VINOLEUM	
36	POLYETHLENE	

Distribution Drawing Legend Page Appears Following Illustration Section

Codes 131, 132, 133, 134

SPM-451

1962 PLYMOUTH SP1-M, SP2-M
4 DOOR STATION WAGON
CLOTH AND IMITATION LEATHER COMBINATION

MyMopar.com

1962 PLYMOUTH - S SERIES

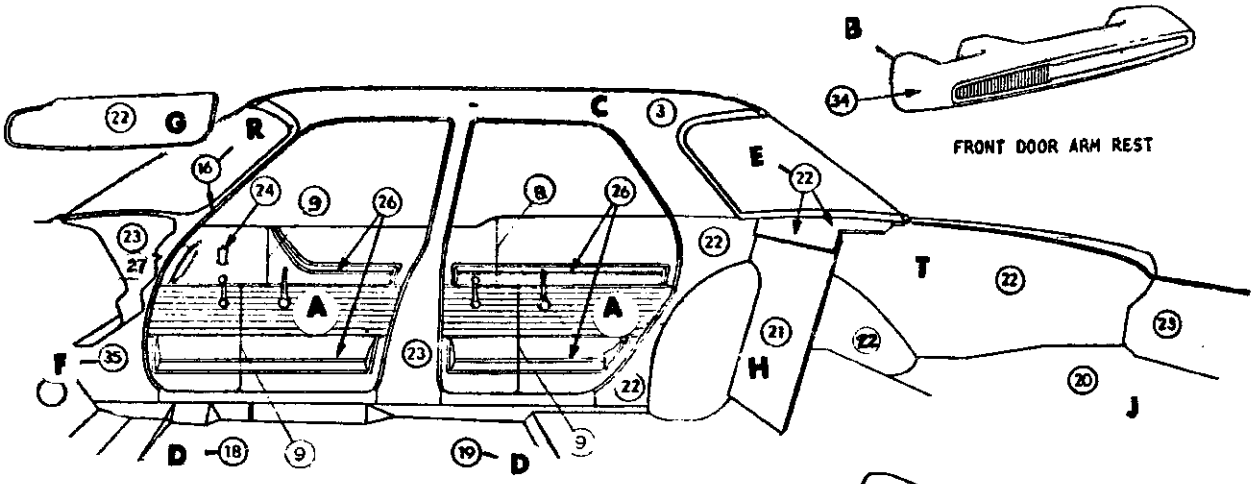

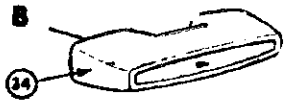

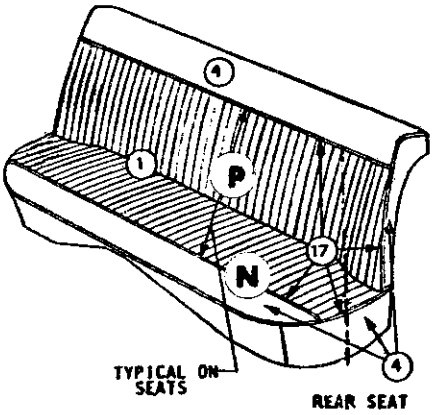

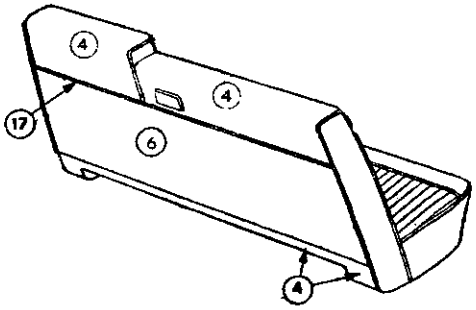

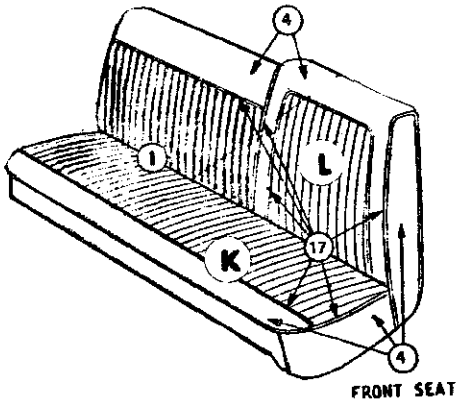

DISTRIBUTION OF MATERIAL

1	BODY CLOTH I	
3	HEADLINING	
4	IMITATION LEATHER	28-AM-22
6	IMITATION LEATHER	19-C-22
8	IMITATION LEATHER	19-DJ-22
9	IMITATION LEATHER	.012-L-22
16	LACE	
17	EXTRUDED VINYL	
18	FLOOR COVERING-FRONT-CARPET	
19	FLOOR COVERING-REAR-CARPET	
20	FLOOR COVERING-LUGG. COMPT. RUBBER	
21	CARDBOARD	
22	EMBOSSED CARDBOARD	
23	PAINT	
24	METAL	
26	MYLAR MOULDING	
27	MOULDED RESIN	
34	PLASTISOL	
35	POLYETHLENE	

Distribution Drawing Legend Page Appears Following Illustration Section

Codes 121, 122, 123, 124, 125

SPH-411 1962 PLYMOUTH SP1-H, SP2-H 4 DOOR SEDAN
CLOTH AND IMITATION LEATHER COMBINATION

MyMopar.com

1962 PLYMOUTH - S SERIES

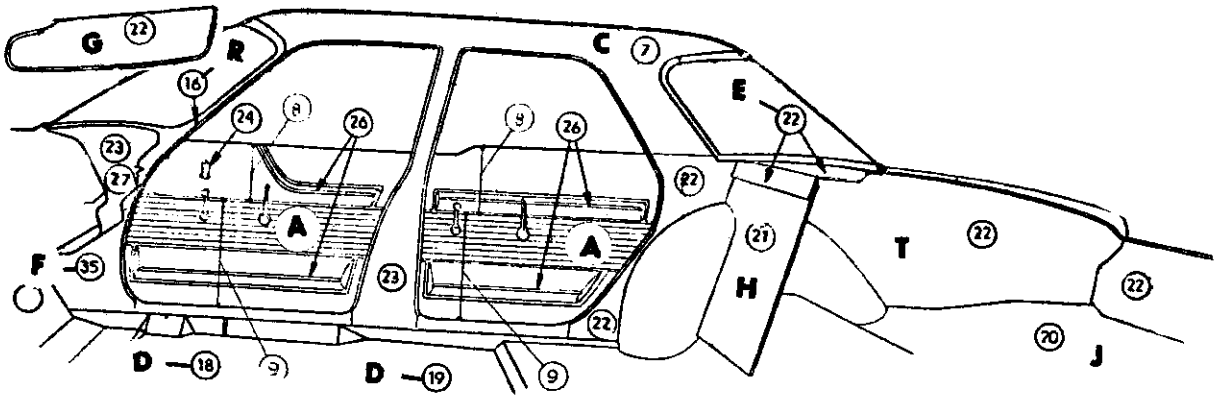

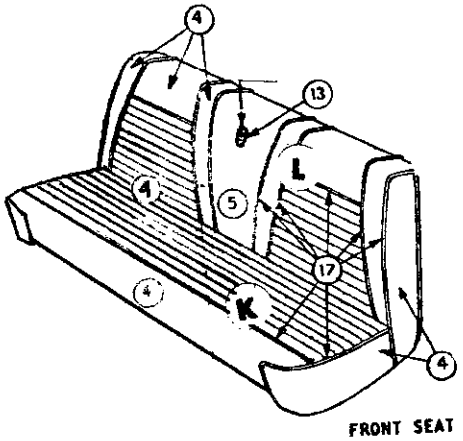

FRONT SEAT

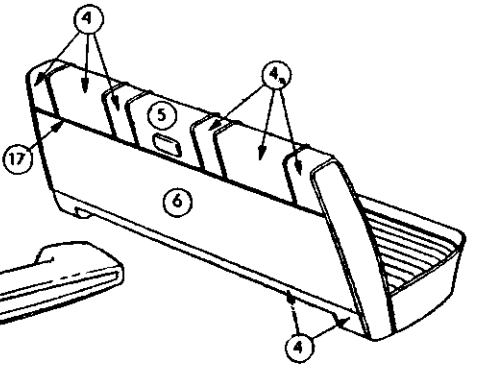

FRONT SEAT (BACK)

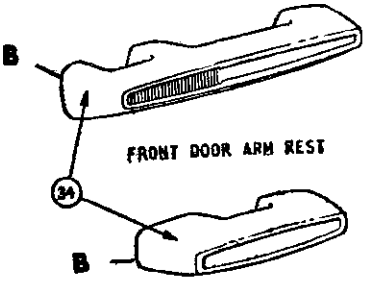

FRONT DOOR ARM REST

REAR DOOR ARM REST

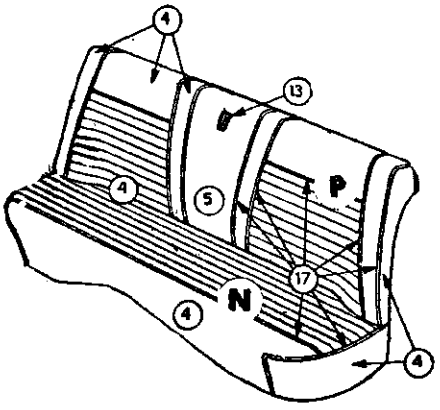

REAR SEAT

DISTRIBUTION OF MATERIAL

3	HEADLINING	
4	IMITATION LEATHER	28-AM-22
5	IMITATION LEATHER	28A-AM-22
6	IMITATION LEATHER	19-C-22
7	IMITATION LEATHER	18-T-16
8	IMITATION LEATHER	19-DJ-22
9	IMITATION LEATHER	.012-L-22
13	IMITATION LEATHER	.017-L-22
16	LACE	
18	FLOOR COVERING-FRONT-CARPET	
19	FLOOR COVERING-REAR-CARPET	
20	FLOOR COVERING-LUGG. COMPT. RUBBER	
21	CARDBOARD	
22	EMBOSSED CARDBOARD	
23	PAINT	
24	METAL	
26	MYLAR MOULDING	
27	MOULDED RESIN	
34	PLASTISOL	
35	POLYETHLENE	

Distribution Drawing Legend Page Appears Following Illustration Section

Codes 241, 244

SPH-414 **1962 PLYMOUTH SP1-H, SP2-H 4 DOOR SEDAN**
IMITATION LEATHER COMBINATION

MyMopar.com

1962 PLYMOUTH - S SERIES

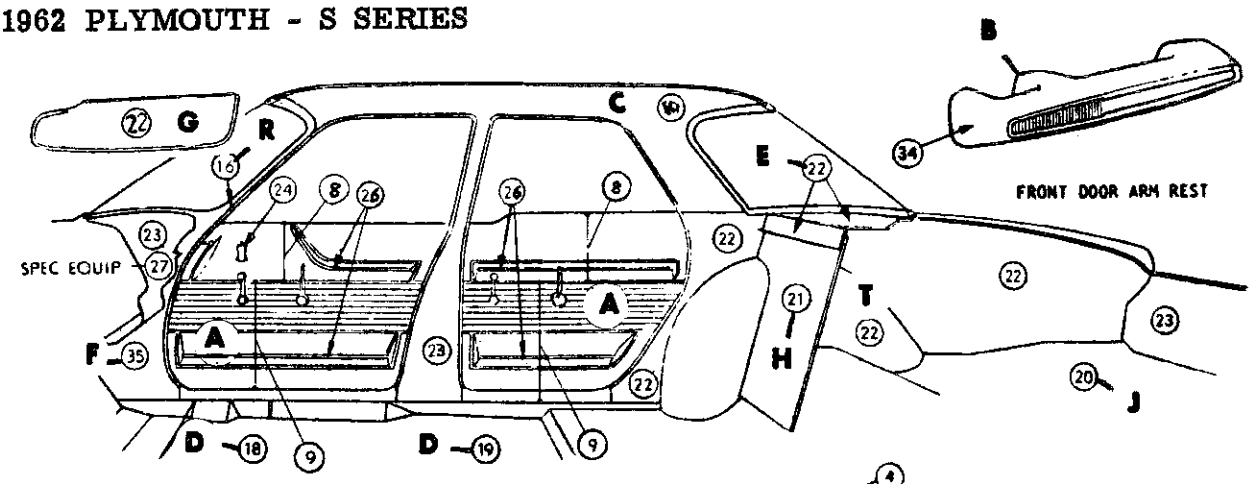

FRONT DOOR ARM REST

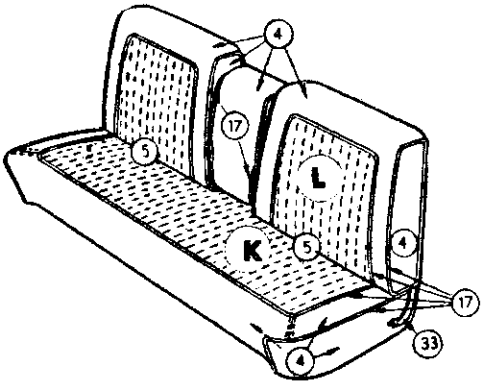

FRONT SEAT

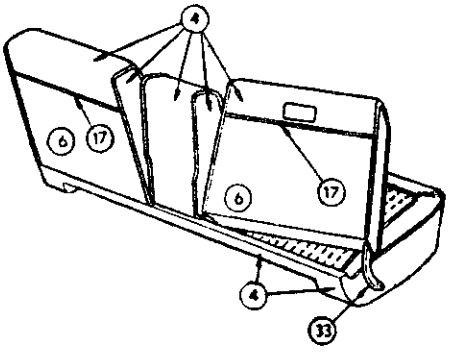

FRONT SEAT (BACK)

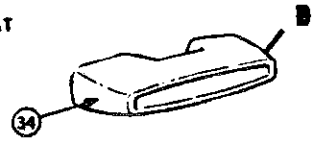

REAR DOOR ARM REST

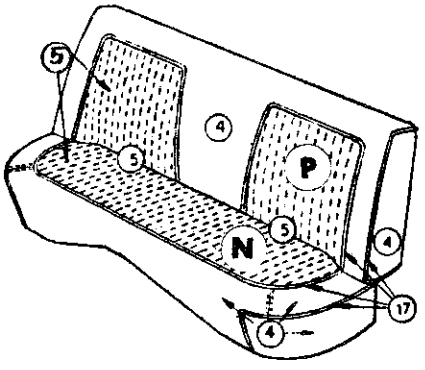

REAR SEAT

DISTRIBUTION OF MATERIAL

4	IMITATION LEATHER	28-AM-22
5	IMITATION LEATHER	28-AM-68
6	IMITATION LEATHER	19-C-22
8	IMITATION LEATHER	19-DJ-22
9	IMITATION LEATHER	.012-L-22
10	IMITATION LEATHER	12-Y-22
16	LACE	
17	EXTRUDED VINYL	
18	FLOOR COVERING-FRONT-CARPET	
19	FLOOR COVERING-REAR-CARPET	
20	FLOOR COVERING-LUGG. COMPT. RUBBER	
22	EMBOSSED CARDBOARD	
23	PAINT	
24	METAL	
26	MYLAR MOULDING	
27	MOULDED RESIN	
33	PLASTIC	
34	PLASTISOL	
35	POLYETHLENE	

Distribution Drawing Legend Page Appears Following Illustration Section

Codes 245, 251, 253

SPH-414A 1962 PLYMOUTH SP1-H, SP2-H 4 DOOR SEDAN
IMITATION LEATHER COMBINATION

MyMopar.com

1962 PLYMOUTH - S SERIES

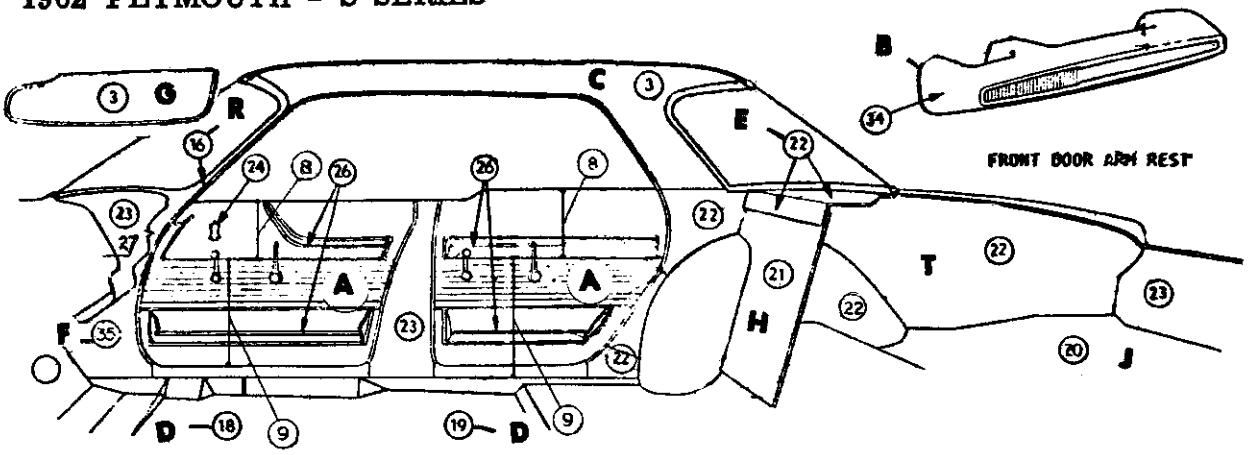

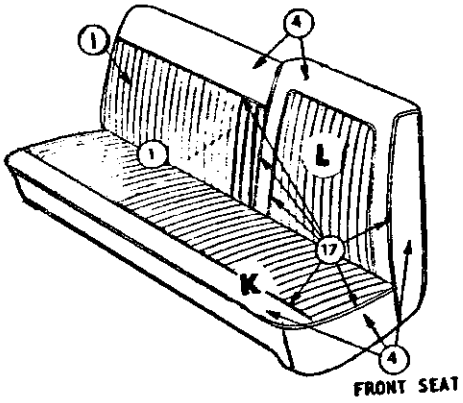

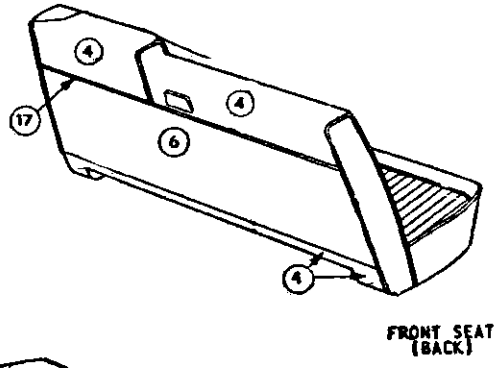

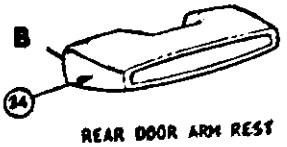

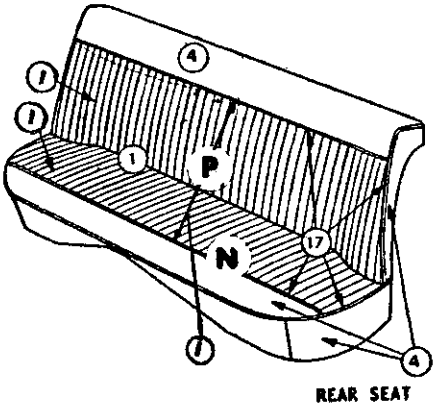

DISTRIBUTION OF MATERIAL

1	BODY CLOTH 1
3	HEADLINING – HARDBOARD
4	IMITATION LEATHER 28–AM–22
6	IMITATION LEATHER 19–C–22
8	IMITATION LEATHER 19–DJ–22
9	IMITATION LEATHER .012–L–22
16	LACE
17	EXTRUDED VINYL
18	FLOOR COVERING–FRONT–CARPET
19	FLOOR COVERING–REAR–CARPET
20	FLOOR COVERING–LUGG. COMPT. RUBBER
21	CARDBOARD
22	EMBOSSED CARDBOARD
23	PAINT
24	METAL
26	MYLAR MOULDING
27	MOULDED RESIN
34	PLASTISOL
35	POLYETHLENE

Distribution Drawing Legend Page Appears Following Illustration Section

Codes 121, 122, 123, 124, 125

SPH-431 1962 PLYMOUTH SP1-H, SP2-H SPECIAL 4 DOOR SEDAN CLOTH AND IMITATION LEATHER COMBINATION

MyMopar.com

1962 PLYMOUTH - S SERIES

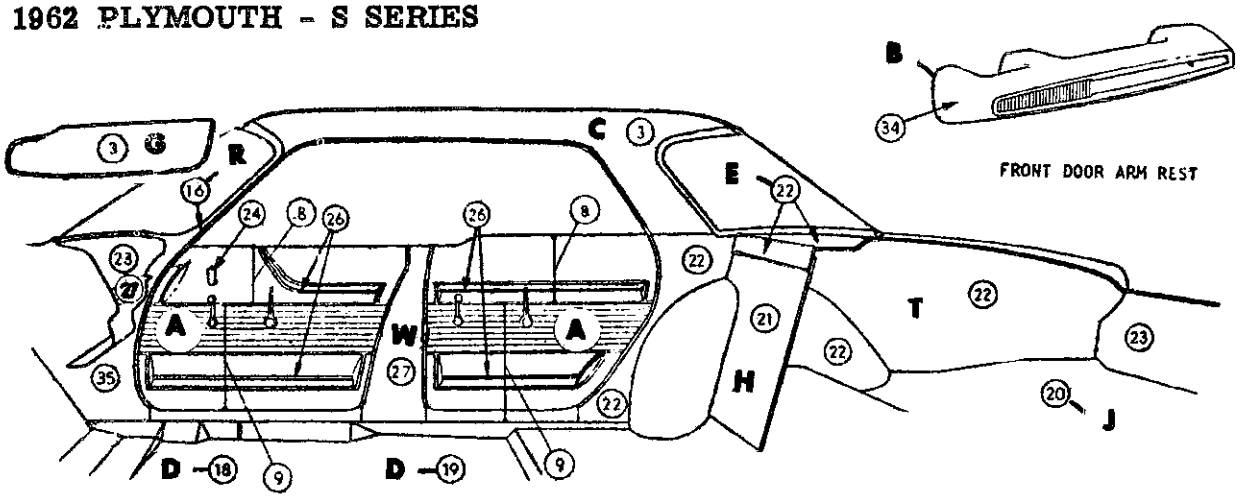

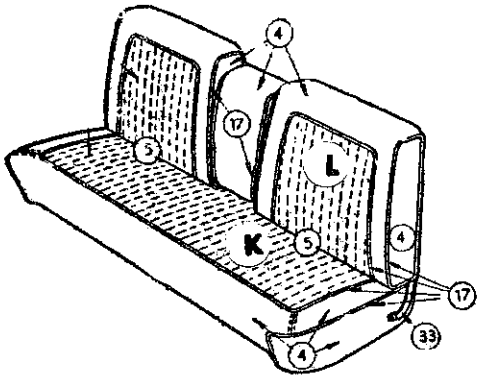

FRONT SEAT

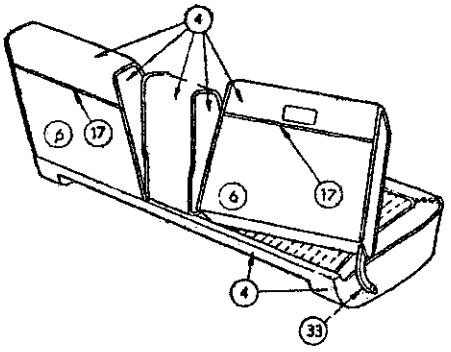

FRONT SEAT (BACK)

REAR DOOR ARM REST

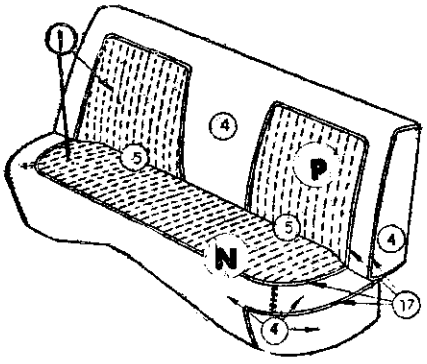

REAR SEAT

DISTRIBUTION OF MATERIAL

3	HEADLINING - HARDBOARD	
4	IMITATION LEATHER	28-AM-22
5	IMITATION LEATHER	28-AM-68
6	IMITATION LEATHER	19-C-22
8	IMITATION LEATHER	19-DJ-22
9	IMITATION LEATHER	.012-L-22
16	LACE	
18	FLOOR COVERING-FRONT-CARPET	
19	FLOOR COVERING-REAR-CARPET	
20	FLOOR COVERING-LUGG. COMPT. RUBBER	
21	CARDBOARD	
22	EMBOSSED CARDBOARD	
23	PAINT	
24	METAL	
26	MYLAR MOULDING	
27	MOULDED RESIN	
33	PLASTIC	
34	PLASTISOL	
35	POLYEHTLENE	

Distribution Drawing Legend Page Appears Following Illustration Section

Codes 245, 251, 253

SPH-434 1962 PLYMOUTH SP1-H, SP2-H SPECIAL 4 DOOR SEDAN IMITATION LEATHER COMBINATION

MyMopar.com

1962 PLYMOUTH - S SERIES

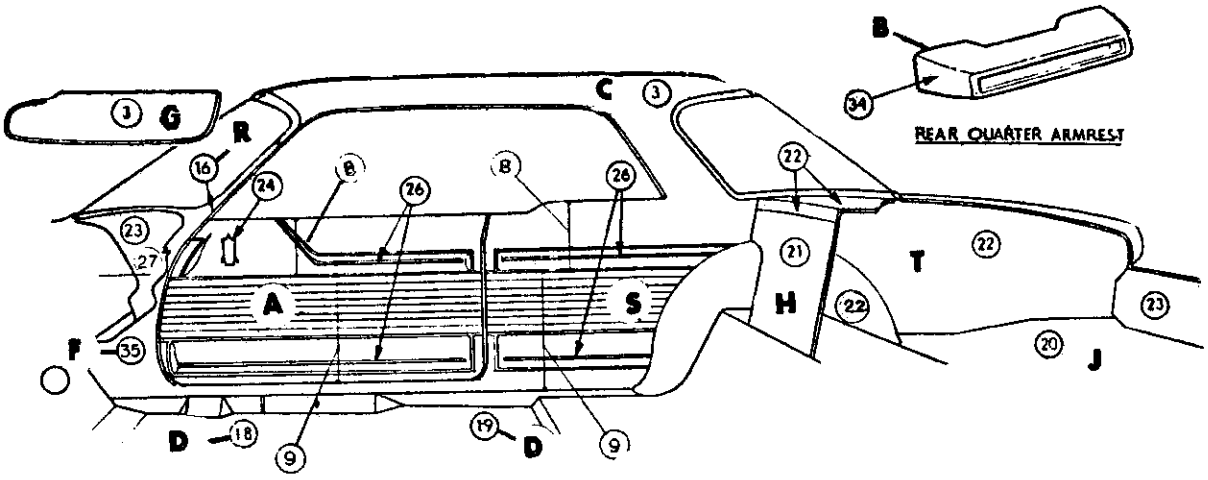

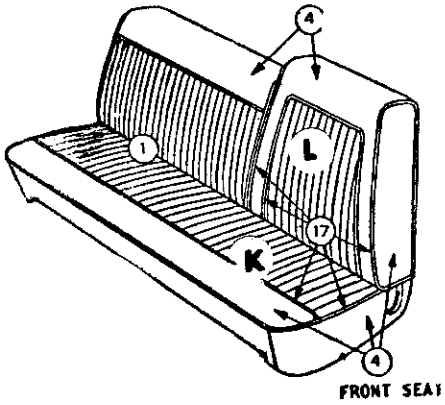

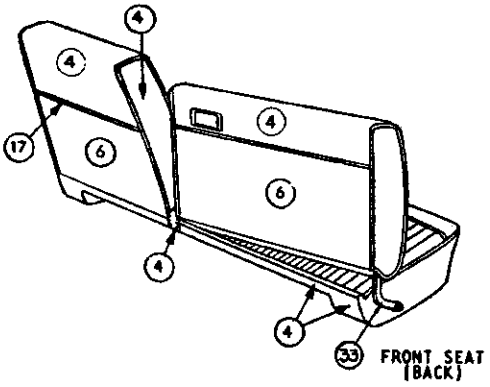

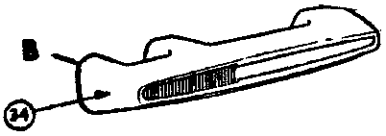

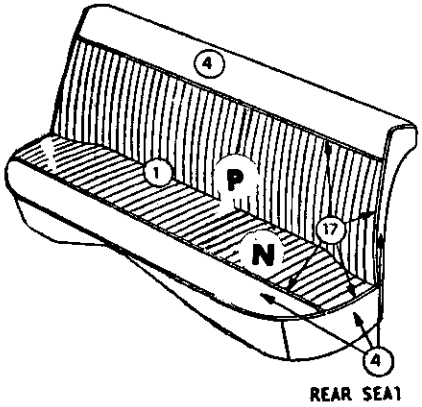

DISTRIBUTION OF MATERIAL

1	BODY CLOTH	I
3	HEADLINING - HARDBOARD	
4	IMITATION LEATHER	28-AM-22
6	IMITATION LEATHER	19-C-22
8	IMITATION LEATHER	19-DJ-22
9	IMITATION LEATHER	.012-L-22
16	LACE	
18	FLOOR COVERING-FRONT-CARPET	
19	FLOOR COVERING-REAR-CARPET	
20	FLOOR COVERING-LUGG. COMPT. RUBBER	
21	CARDBOARD	
22	EMBOSSED CARDBOARD	
23	PAINT	
24	METAL	
26	MYLAR MOULDING	
27	MOULDED RESIN	
33	PLASTIC	
35	POLYETHLENE	

Distribution Drawing Legend Page Appears Following Illustration Section

Codes 121, 122, 123, 124, 125

SPH-231 1962 PLYMOUTH SP1-H, SP2-H SPECIAL CLUB COUPE
CLOTH AND IMITATION LEATHER COMBINATION

MyMopar.com

1962 PLYMOUTH - S SERIES

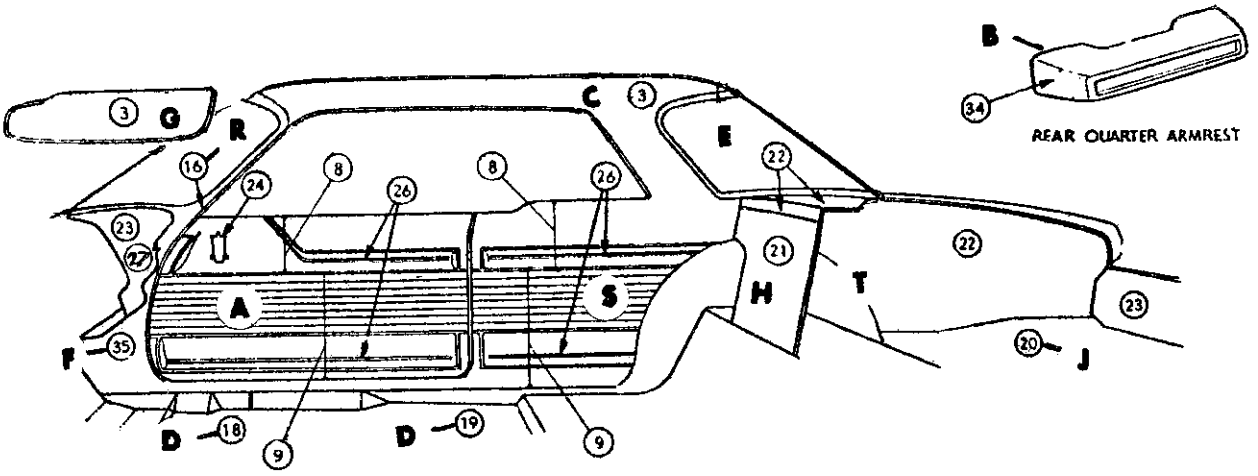

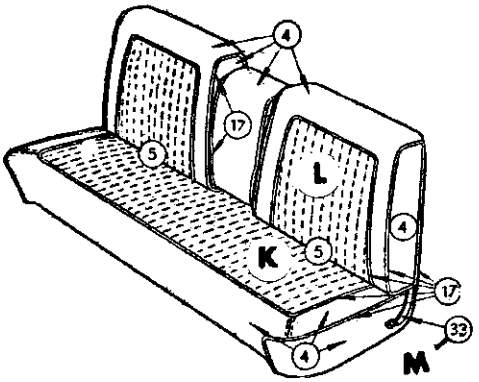

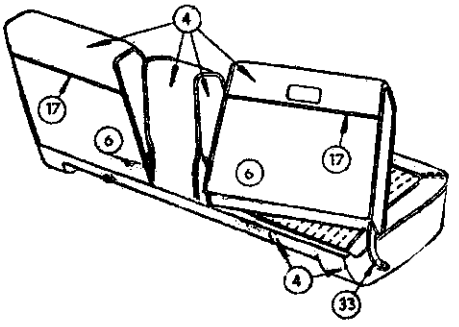

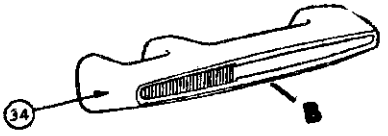

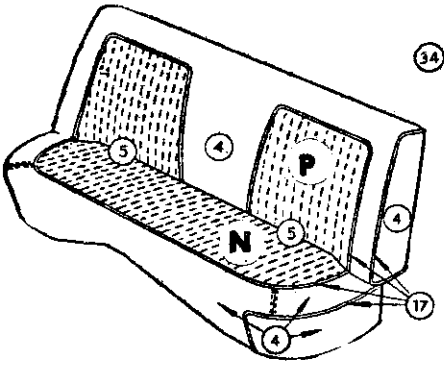

DISTRIBUTION OF MATERIAL

3	HEADLINING – HARDBOARD
4	IMITATION LEATHER 28-AM-22
5	IMITATION LEATHER 28-AM-68
6	IMITATION LEATHER 19-C-22
8	IMITATION LEATHER 19-DJ-22
9	IMITATION LEATHER 012-L-22
16	LACE
17	EXTRUDED VINYL
18	FLOOR COVERING-FRONT-CARPET
19	FLOOR COVERING-REAR-CARPET
20	FLOOR COVERING-LUGG COMPT RUBBER
21	CARDBOARD
22	EMBOSSED CARDBOARD
23	PAINT
24	METAL
26	MYLAR MOULDING
27	MOULDED RESIN
33	PLASTIC
34	PLASTISOL

Distribution Drawing Legend Page Appears Following Illustration Section

Codes 245, 251, 253

SPH-234 1962 PLYMOUTH SP1-H, SP2-H SPECIAL CLUB COUPE IMITATION LEATHER COMBINATION

MyMopar.com

1962 PLYMOUTH - S SERIES

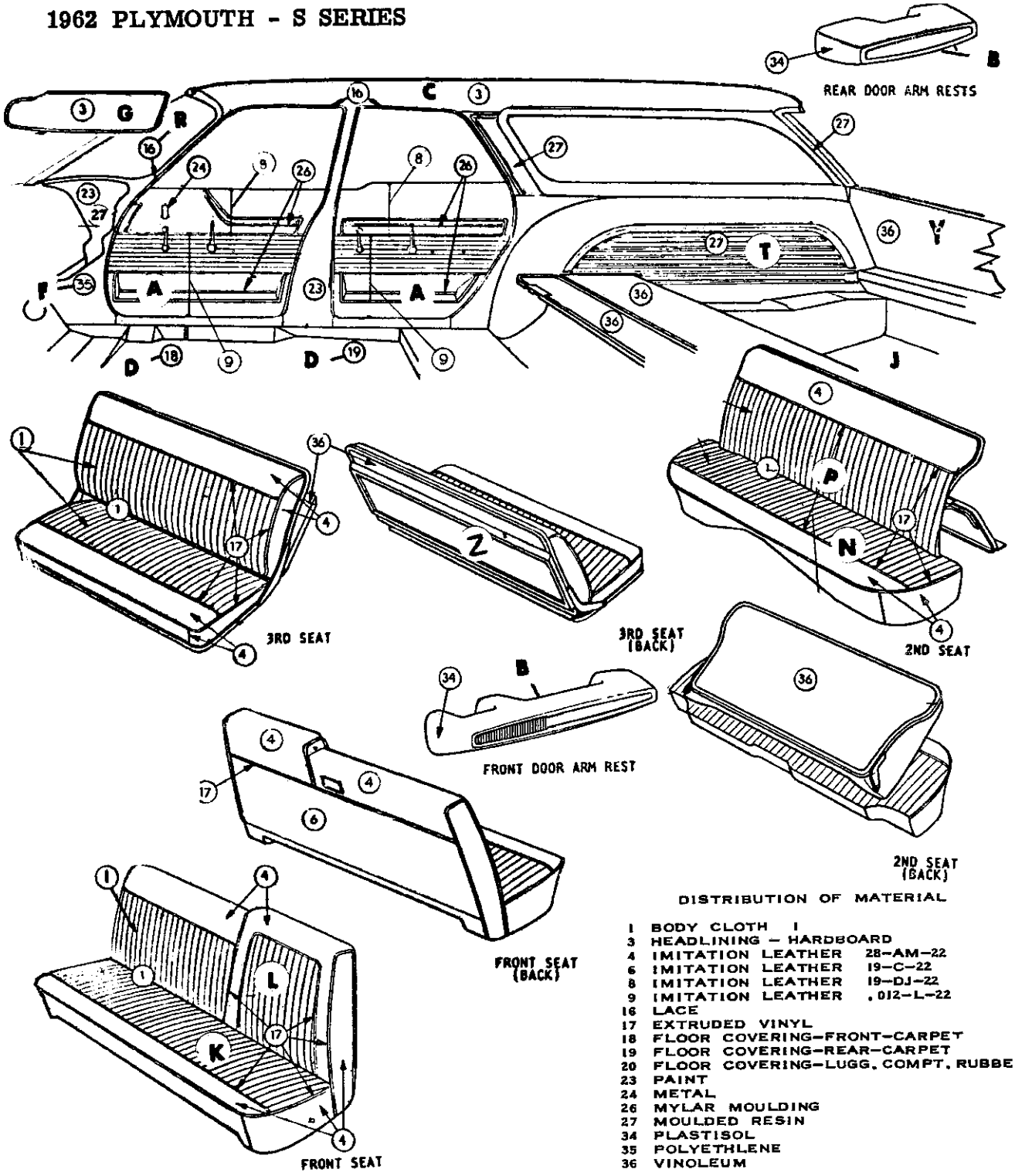

DISTRIBUTION OF MATERIAL

1	BODY CLOTH 1
3	HEADLINING – HARDBOARD
4	IMITATION LEATHER 28–AM–22
6	IMITATION LEATHER 19–C–22
8	IMITATION LEATHER 19–DJ–22
9	IMITATION LEATHER .012–L–22
16	LACE
17	EXTRUDED VINYL
18	FLOOR COVERING–FRONT–CARPET
19	FLOOR COVERING–REAR–CARPET
20	FLOOR COVERING–LUGG. COMPT. RUBBER
23	PAINT
24	METAL
26	MYLAR MOULDING
27	MOULDED RESIN
34	PLASTISOL
35	POLYETHLENE
36	VINOLEUM

Distribution Drawing Legend Page Appears Following Illustration Section

Codes 121, 122, 123, 124, 125

SPH-451 1962 PLYMOUTH SP2-H 4 DOOR STATION WAGON
CLOTH AND IMITATION LEATHER COMBINATION

MyMopar.com

1962 PLYMOUTH - S SERIES

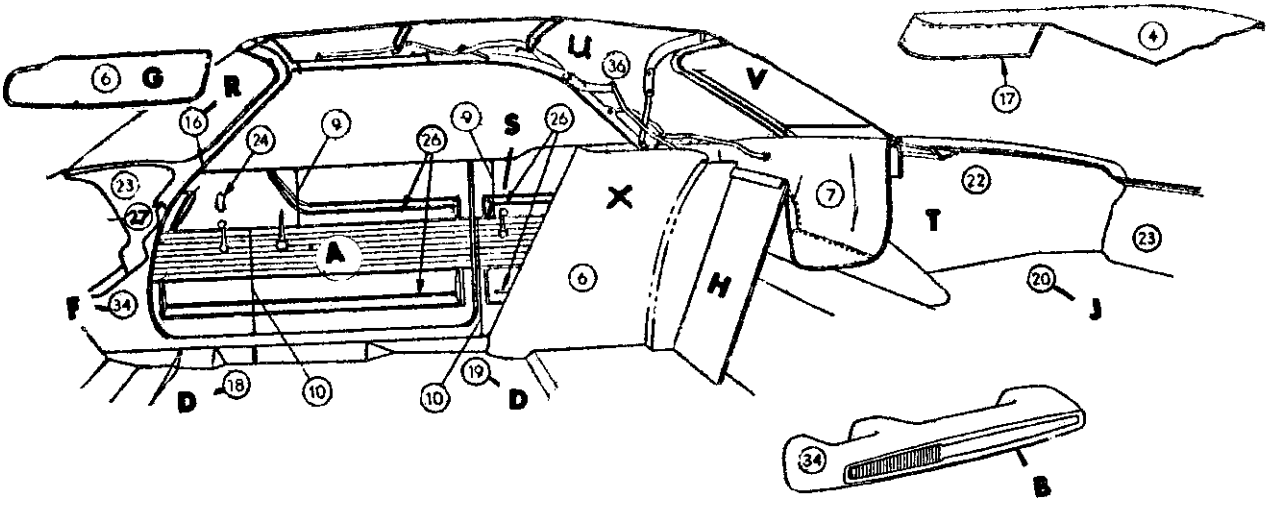

DOOR ARM REST

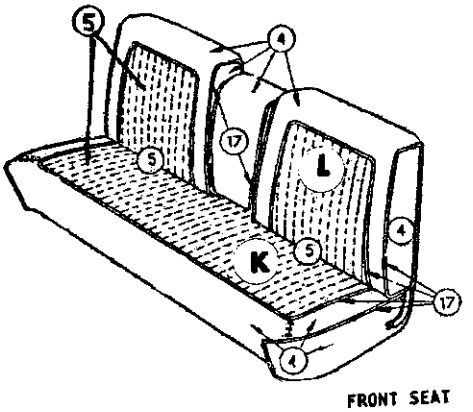

FRONT SEAT

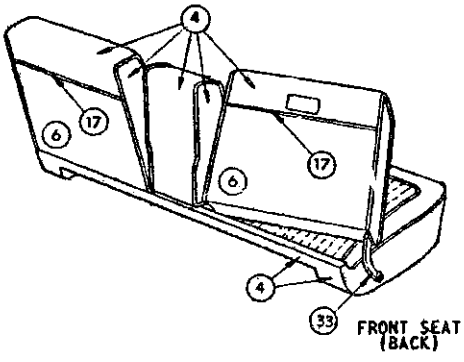

FRONT SEAT (BACK)

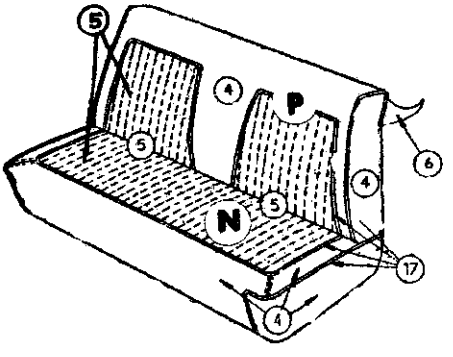

REAR SEAT

DISTRIBUTION OF MATERIAL

4	IMITATION LEATHER	28-AM-22
5	IMITATION LEATHER	28-AM-68
6	IMITATION LEATHER	19-C-22
7	IMITATION LEATHER	19A-C-22
9	IMITATION LEATHER	19-DJ-22
10	IMITATION LEATHER	.012-L-22
16	LACE	
17	EXTRUDED VINYL	
18	FLOOR COVERING-FRONT-CARPET	
19	FLOOR COVERING-REAR-CARPET	
20	FLOOR COVERING-LUGG. COMPT. RUBBER	
22	EMBOSSED CARDBOARD	
23	PAINT	
24	METAL	
26	MYLAR MOULDING	
27	MOULDED RESIN	
33	PLASTIC	
34	POLYETHLENE	
36	TOP MATERIAL	

Distribution Drawing Legend Page Appears Following Illustration Section

Codes 245, 251, 253, 254

SPH-274A 1962 PLYMOUTH SP2-H CONVERTIBLE COUPE IMITATION LEATHER TRIM

MyMopar.com

1962 PLYMOUTH - S SERIES

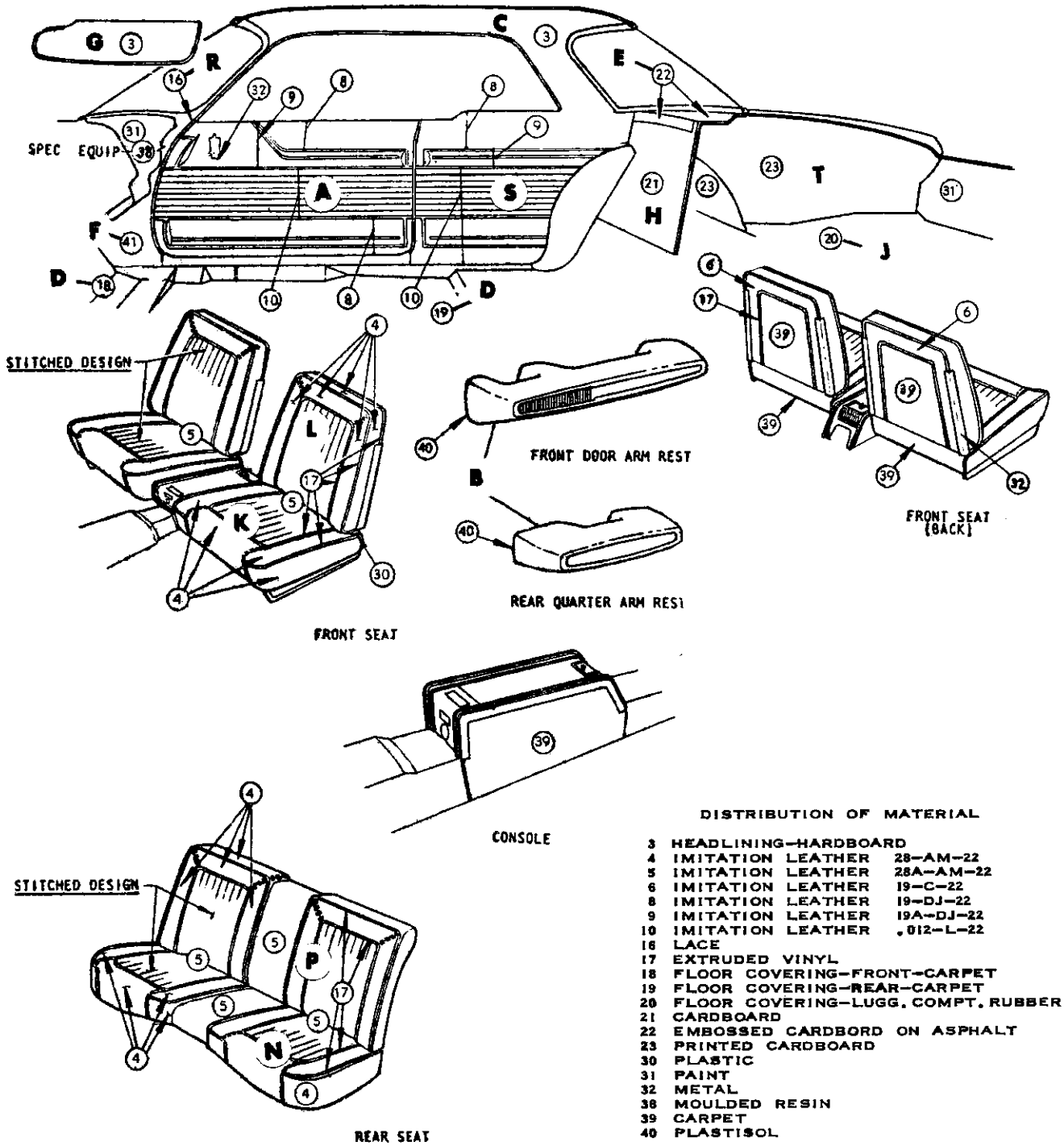

DISTRIBUTION OF MATERIAL

3	HEADLINING—HARDBOARD	
4	IMITATION LEATHER	28—AM—22
5	IMITATION LEATHER	28A—AM—22
6	IMITATION LEATHER	19—C—22
8	IMITATION LEATHER	19—DJ—22
9	IMITATION LEATHER	19A—DJ—22
10	IMITATION LEATHER	.012—L—22
16	LACE	
17	EXTRUDED VINYL	
18	FLOOR COVERING—FRONT—CARPET	
19	FLOOR COVERING—REAR—CARPET	
20	FLOOR COVERING—LUGG. COMPT. RUBBER	
21	CARDBOARD	
22	EMBOSSED CARDBORD ON ASPHALT	
23	PRINTED CARDBOARD	
30	PLASTIC	
31	PAINT	
32	METAL	
38	MOULDED RESIN	
39	CARPET	
40	PLASTISOL	

Distribution Drawing Legend Page Appears Following Illustration Section

Codes 261, 263, 265

SPP-234 1962 PLYMOUTH SP2-P SPECIAL CLUB COUPE
IMITATION LEATHER

MyMopar.com

1962 PLYMOUTH - S SERIES

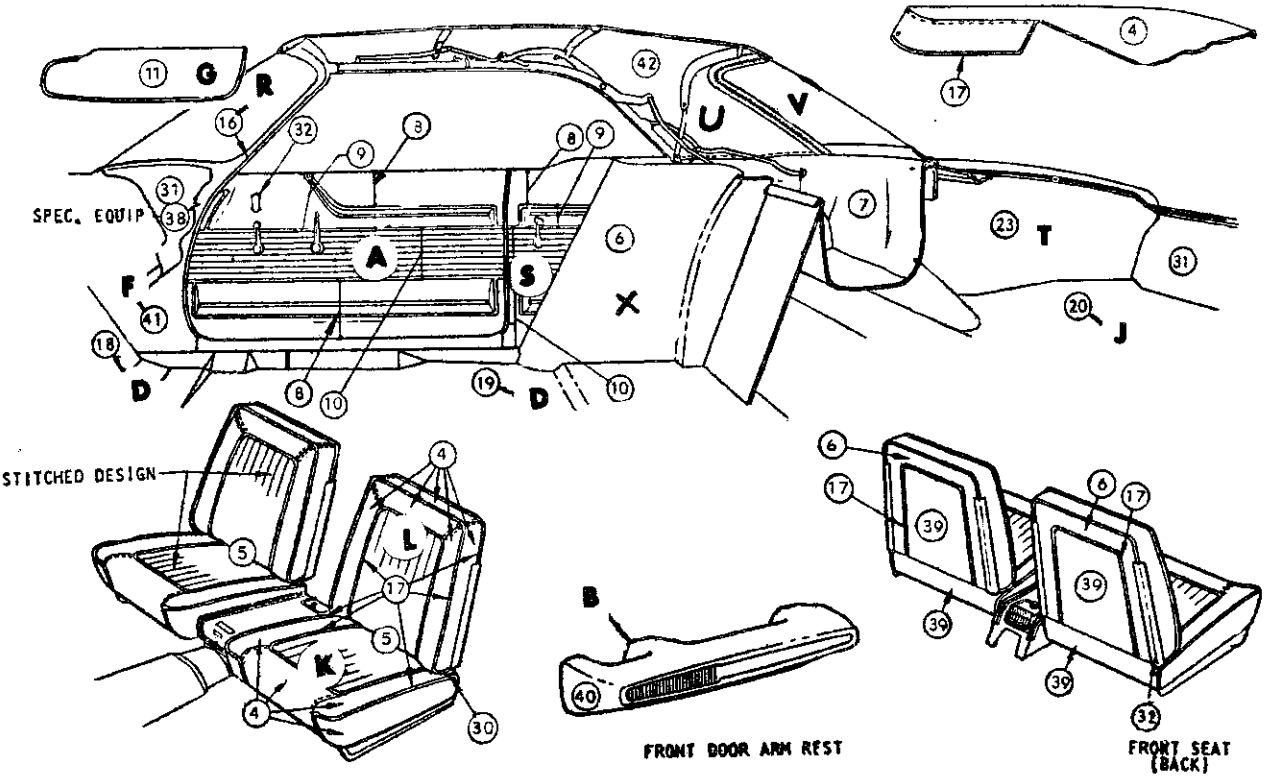

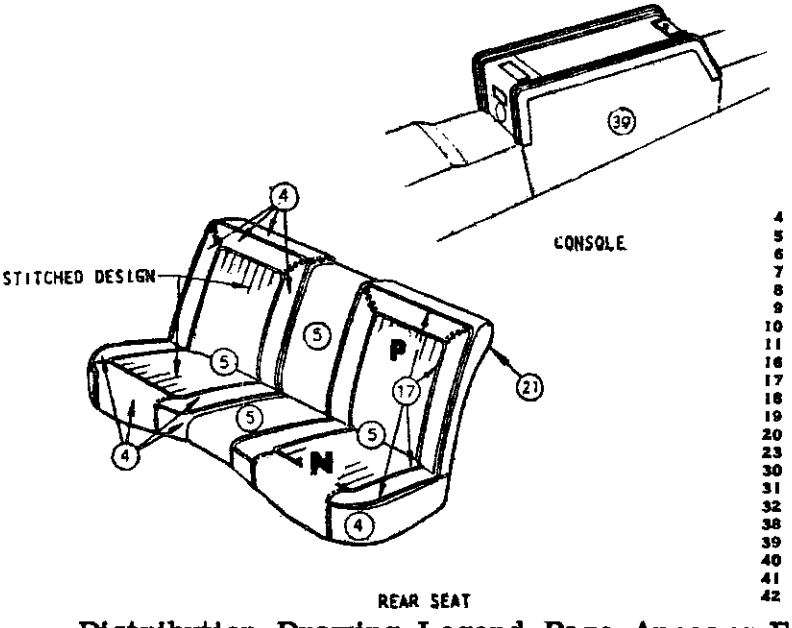

DISTRIBUTION OF MATERIAL

4	IMITATION LEATHER	28-AM-22
5	IMITATION LEATHER	28A-AM-22
6	IMITATION LEATHER	19-C-22
7	IMITATION LEATHER	19A-C-22
8	IMITATION LEATHER	19-DJ-22
9	IMITATION LEATHER	19A-DJ-22
10	IMITATION LEATHER	.012-L-22
11	IMITATION LEATHER	19B-C-22
16	LACE	
17	EXTRUDED VINYL	
18	FLOOR COVERING-FRONT-CARPET	
19	FLOOR COVERING-REAR-CARPET	
20	FLOOR COVERING-LUGG. COMPT. RUBBER	
23	PRINTED CARDBOARD	
30	PLASTIC	
31	PAINT	
32	METAL	
38	MOULDED RESIN	
39	CARPET	
40	PLASTISOL	
41	POLYETHLENE	
42	TOP MATERIAL	

Distribution Drawing Legend Page Appears Following Illustration Section

Codes 261, 263, 265

SPP-274 1962 PLYMOUTH SP2-P CONVERTIBLE COUPE
IMITATION LEATHER TRIM

MyMopar.com

1962 PLYMOUTH - S SERIES

Distribution Drawing Legend

See Illustrations For Letter Identification

Letter	Description	Code
A	Panel, Door Trim	23-92-5
B	Arm Rest, Door, Front	23-76-3
	Center, Front Seat	23-76-34
	Door, Rear	23-76-59
	Quarter Panel	23-76-66
C	Headlining	23-86-3
D	Floor Cover, Front, Carpet	23-79-3
	Rubber	23-20-8
	Rear, Carpet	23-79-33
	Rubber	23-20-41
E	Panel, Shelf Trim	23-102-3
F	Panel, Cowl Trim	23-91-6
G	Visor	23-103-3
H	Panel, Luggage Compartment Front	23-96-3
J	Cover, Luggage Compartment Floor	23-20-29
K	Cover, Front Seat Cushion	23-108-5
L	Cover, Front Seat Back	23-108-16
M	Cover, Front Seat Hinge	23-108-84
N	Cover, Rear Seat Cushion	23-109-36
P	Cover, Rear Seat Back	23-109-4
Q	Cover, Rear Seat Cushion Bottom Panel	23-109-40
R	Weathercord, Door	23-113-2
	Hinge Pillar	23-113-25
	Lock Pillar	23-113-30
	w/Weatherstrip	23-66-33
S	Panel, Quarter Trim	23-101-3
T	Cover, Wheelhouse	23-96-8
U	Top Deck and Side Quarter	23-112-108
V	Curtain, Folding Top Back	23-112-45
W	Cover, Center Pillar	23-99-4
X	Panel, Folding Top Well Pocket	23-112-153
Y	Cover, Tailgate Inside Panel	23-79-79
Z	Cover, Rear Seat Back Panel	23-109-5

MyMopar.com

BODY CODE	COLUMN LEGEND
	SAVOY (SP1-L)
201 (21)	2 D. Sedan (Fleet)
203 (41)	4 D. Sedan (Fleet)
211 (21)	2 D. Sedan
213 (41)	4 D. Sedan
256 (45A)	4 D. Wagon (2 Seat)
283 (41)	4 D. Sedan (Taxi)
291 (21)	2 D. Sedan (Police)
293 (41)	4 D. Sedan (Police)
296 (45A)	4 D. Wagon (Police-2 Seat)
	BELVEDERE (SP1-M)
221 (21)	2 D. Sedan
222 (23)	2 D. Hard Top
223 (41)	4 D. Sedan
266 (45A)	4 D. Wagon (2 Seat)
	FURY (SP1-H)
232 (23)	2 D. Hard Top
233 (41)	4 D. Sedan
	SAVOY (SP2-L)
301 (21)	2 D. Sedan (Fleet)
303 (41)	4 D. Sedan (Fleet)
311 (21)	2 D. Sedan
313 (41)	4 D. Sedan
356 (45A)	4 D. Wagon (2 Seat)
383 (41)	4 D. Sedan (Taxi)
391 (21)	2 D. Sedan (Police)
393 (41)	4 D. Sedan (Police)
396 (45A)	4 D. Wagon (Police-2 Seat)
	BELVEDERE (SP2-M)
321 (21)	2 D. Sedan
322 (23)	2 D. Hard Top
323 (41)	4 D. Sedan
366 (45A)	4 D. Wagon (2 Seat)
367 (45B)	4 D. Wagon (3 Seat)
	FURY (SP2-H)
332 (23)	2 D. Hard Top
333 (41)	4 D. Sedan
334 (43)	4 D. Hard Top
335 (27)	Convertible
376 (45A)	4 D. Wagon (2 Seat)
377 (45B)	4 D. Wagon (3 Seat)
	SPORT FURY (SP2-P)
342 (23)	2 D. Hard Top
345 (27)	Convertible

MyMopar.com

CONVERTIBLE TOP COLOR LEGEND

6 Black 7 White 9 Special

STARTING SERIAL NUMBERS

		Detroit Built	St. Louis Built	Newark Built	Los Angeles Built
SP1-L	(Savoy)	2121-100001	2127-100001	2126-100001	2125-100001
SP1-L	(Savoy Sub.)	2521-100001	2527-100001	2526-100001	2525-100001
SP1-M	(Belvedere)	2221-100001	2227-100001	2226-100001	2225-100001
SP1-M	(Belvedere Sub.)	2621-100001	2627-100001	2626-100001	2625-100001
SP1-H	(Fury)	2321-100001	2327-100001	2326-100001	2325-100001
SP2-L	(Savoy)	3121-100001	3127-100001	3126-100001	3125-100001
SP2-L	(Savoy Sub.)	3521-100001	3527-100001	3526-100001	3525-100001
SP2-M	(Belvedere)	3221-100001	3227-100001	3226-100001	3225-100001
SP2-M	(Belvedere Sub.)	3621-100001	3627-100001	3626-100001	3625-100001
SP2-H	(Fury)	3321-100001	3327-100001	3326-100001	3325-100001
SP2-H	(Fury Sub.)	3721-100001	3727-100001	3726-100001	3725-100001
SP2-P	(Fury Sport)	3421-100001	3427-100001	3426-100001	3425-100001

TRIM CODE	MODEL	MATERIAL			COLOR	4 D. Sed.	Special 4 D. Sed.	Sub.	2 D. Sed.	Spec. Club Cpe.	Conv. Cpe.
		Cloth	Vinyl	Leather							
101	P1-L, P2-L	★	★	-	Blue	★	-	-	★	-	-
103	P1-L, P2-L	★	★	-	Cocoa	★	-	-	★	-	-
104	P1-L, P2-L	★	★	-	Gray	★	-	-	★	-	-
111	P1-M, P2-M	★	★	-	Blue	★	-	-	★	★	-
112	P1-M, P2-M	★	★	-	Green	★	-	-	★	★	-
113	P1-M, P2-M	★	★	-	Cocoa	★	-	-	★	★	-
114	P1-M, P2-M	★	★	-	Gray	★	-	-	★	★	-
115	P1-M, P2-M	★	★	-	Red Plaid	★	-	-	★	-	-
121	P1-H, P2-H	★	★	-	Blue	★	★	★	-	★	-
122	P1-H, P2-H	★	★	-	Green	★	★	★	-	★	-
123	P1-H, P2-H	★	★	-	Cocoa	★	★	★	-	★	-
124	P1-H, P2-H	★	★	-	Black and Gray	★	★	★	-	★	-
125	P1-H, P2-H	★	★	-	Red	★	★	★	-	★	-
131	P1-M, P2-M	★	★	-	Blue	-	-	★	-	-	-
132	P1-M, P2-M	★	★	-	Green	-	-	★	-	-	-
133	P1-M, P2-M	★	★	-	Cocoa	-	-	★	-	-	-
134	P1-M, P2-M	★	★	-	Gray	-	-	★	-	-	-
201	P1-L, P2-L	-	★	-	Blue	-	-	★	-	-	-
203	P1-L, P2-L	-	★	-	Cocoa	-	-	★	-	-	-
204	P1-L, P2-L	-	★	-	Gray	-	-	★	-	-	-
211	P1-L, P2-L	-	★	-	Blue	★	-	-	-	-	-
214	P1-L, P2-L	-	★	-	Gray	★	-	-	-	-	-
231	P1-M, P2-M	-	★	-	Blue	★	-	-	-	-	-
234	P1-M, P2-M	-	★	-	Gray	★	-	-	-	-	-
241	P1-H, P2-H	-	★	-	Blue	★	-	-	-	-	-
244	P1-H, P2-H	-	★	-	Gray	★	-	-	-	-	-
245	P1-H, P2-H	-	★	-	Red	★	★	-	-	★	★
251	P1-H, P2-H	-	★	-	Blue	★	★	-	-	★	★
253	P1-H, P2-H	-	★	-	Cocoa	★	★	-	-	★	★
254	P1-H, P2-H	-	★	-	Black	-	-	-	-	-	★
261	P2-P	-	★	-	Blue	-	-	-	-	★	★
263	P2-P	-	★	-	Cordovan	-	-	-	-	★	★
265	P2-P	-	★	-	Red	-	-	-	-	★	★
294	P1-L, P2-L, P1-M, P2-M	-	★	-	Gray	★	-	-	★	-	-

★ Indicates use as required.
⊟ Indicates parts not listed in any previous parts book.
May 1, 1962 Supersedes Nov. 30, 1961.

Printed in U.S.A.

Prices and specifications subject to change without notice.
Right and left part numbers are on same line, first number is right, second number is left.
* Indicates change or addition.

MyMopar.com

NOTE: RIGHT HAND AND LEFT HAND PARTS LISTED ON THE SAME LINE. Whenever right and left hand parts are identified by consecutive part numbers, they will be listed as in the following example: PANEL, Door Trim 2083 344-5
Interpreted, this indicates that Panel, right is Part No. 2083 344 and Panel, left is Part No. 2083 345.

CODE	REMARKS	PER CAR	SED.	SP. 4 D.	SUB.	SP. CL. CP.	CV. CP.
23-71-1	COVER, Front Console P2-P						
	(code 261)	1	---- ---	---- ---	---- ---	⊟2296 320-1	⊟2296 320-1
	(code 263)	1	---- ---	---- ---	---- ---	⊟2296 324-5	⊟2296 324-5
	(code 265)	1	---- ---	---- ---	---- ---	⊟2296 328-9	⊟2296 328-9
23-76-3	ARM REST, Front Door P1, P2						
	(codes 101, 111, 131, 201, 211, 231) (blue)	2	2273 000	---- ---	2273 000	2273 000	
	(codes 103, 113, 133, 203) (cocoa)	2	2273 002	---- ---	2273 002	2273 002	
	(codes 104, 114, 134, 204, 214, 234) (gray)	2	2273 003	---- ---	2273 003	2273 003	
	(codes 112, 132) (green)	2	2273 001	---- ---	2273 001		
	(codes 121, 241, 251) (blue)	1	2273 006-7	2273 006-7	2273 006-7	2273 006-7	2273 006-7
	(code 122) (green)	1	2273 008-9	2273 008-9	2273 008-9	2273 008-9	2273 008-9
	(codes 123, 253) (cocoa)	1	2273 010-11	2273 010-11	2273 010-11	2273 010-11	2273 010-11
	(codes 124, 244, 254) (gray)	1	2273 012-3	2273 012-3	2273 012-3	2273 012-3	2273 012-3
	(codes 115, 125, 545) (red)	1	*2273 014-5	*2273 014-5	*2273 014-5	*2273 014-5	*2273 014-5
	(code 294) (gray)	2	2212 691				
	(code 261) (blue)	1	---- ---	---- ---	---- ---	2249 778-9	2249 778-9
	(code 263) (cordovan)	1	---- ---	---- ---	---- ---	2249 780-1	2249 780-1
	(code 265) (black)	1	---- ---	---- ---	---- ---	2297 160-1	2297 160-1
	Screw	4	162 090	162 090	162 090	162 090	162 090
23-76-16	NUT, Arm Rest to Panel P1, P2	★	1280 134	1280 134	1280 134	1280 134	1280 134
23-76-18	ARM REST, Front Seat Back Center P1, P2						
	(code 245)	1	2293 750	2293 750	---- ---	2293 750	2293 750
	(code 251)	1	2293 893	2293 893	---- ---	2293 893	2293 893
	(code 253)	1	2293 894	2293 894	---- ---	2293 894	2293 894
	(code 254)	1	---- ---	---- ---	---- ---	---- ---	2293 895
23-76-27	HOOK, Front Seat Arm Rest Frame Retainer P1-H, P2-H	1	---- ---	1918 568	---- ---	1918 568	1918 568
23-76-28	BAR, Front Seat Center Arm Rest Frame Lock P1-H, P2-H	1	---- ---	2270 102	---- ---	2270 102	2270 102
23-76-34	COVER, Front Seat Back Center Arm Rest P1, P2						
	(code 245)	1	2293 747	2293 747	---- ---	2293 747	2293 747
	(code 251)	1	2293 890	2293 890	---- ---	2293 890	2293 890
	(code 253)	1	2293 891	2293 891	---- ---	2293 891	2293 891
	(code 254)	1	---- ---	---- ---	---- ---	---- ---	2293 892
	(codes 124, 134, 204, 714, 804, 814) (gray)	1	---- ---	---- ---	2249 857		
23-76-59	ARM REST, Rear Door P1, P2						
	(codes 101, 111, 121, 131, 201, 211, 231, 241, 251) (blue)	2	2273 000	2273 000	2273 000		
	(codes 103, 113, 123, 133, 203, 253) (cocoa)	2	2273 002	2273 002	2273 002		

★ Indicates use as required.
⊟ Indicates parts not listed in any previous parts book.
Right and left part numbers are on same line, first number is right, second number is left.
* Indicates change or addition.

Printed in U.S.A.
Prices and specifications subject to change without notice.
March 8, 1963 Supersedes May 1, 1962.

MyMopar.com

CODE	REMARKS	PER CAR	SED.	SP. 4D.	SUB.	SP. CL. CP.	CV. CP.
23-76-59	ARM REST, Rear Door - Cont'd P1, P2						
	(codes 104, 114, 124, 134, 204, 214, 234, 244) (gray)	2	2273 003	2273 003	2273 003		
	(codes 112, 122, 132) (green)	2	2273 001	2273 001	2273 001		
	(codes 115, 125, 245) (red)	2	*2273 004	*2273 004	*2273 004		
	(code 294) (gray)	2	2212 691				
	(screw)	4	162 090	162 090	162 090		
23-76-66	ARM REST, Rear Quarter P1, P2						
	(codes 101, 111, 121, 251)(blue)	2	2273 000	---- ---	---- ---	2273 000	
	(codes 112, 122) (green)	2	2273 001	---- ---	---- ---	2273 001	
	(codes 103, 113, 123, 253) (cocoa)	2	2273 002	---- ---	---- ---	2273 002	
	(codes 104, 114, 124) (gray)	2	2273 003	---- ---	---- ---	2273 003	
	(codes 115, 125, 245) (red)	2	*2273 004	---- ---	---- ---	*2273 004	
	(code 294) (gray)	2	2212 691				
	(code 261) (blue)	2	---- ---	---- ---	---- ---	2249 776	
	(code 263) (cordovan)	2	---- ---	---- ---	---- ---	2249 777	
	(code 265) (black)	2	---- ---	---- ---	---- ---	2297 159	
23-76-80	NUT, Quarter Arm Rest to Panel P1, P2	4	1280 134	---- ---	---- ---	1280 134	
23-77-3	ASSIST STRAP, Center Pillar P1-L (4 D.)	2	*2274 841				
23-77-17	SPACER, Assist Strap P1-L	2	2292 201				
23-79-3	CARPET, Front Floor P1, P2						
	(blue)	1	*2273 063	*2273 063	*2273 063	*2273 063	*2273 063
	(green)	1	*2273 064	*2273 064	*2273 064	*2273 064	*2273 064
	(cordovan)	1	*2273 065	*2273 065	*2273 065	*2273 065	*2273 065
	(black)	1	*2273 066	*2273 066	*2273 066	*2273 066	*2273 066
23-79-33	CARPET, Rear Floor P1, P2						
	(blue)	1	*2273 076	*2273 076	*2273 076	*2273 076	*2273 076
	(green)	1	*2273 077	*2273 077	*2273 077	*2273 077	
	(cordovan)	1	*2273 078	*2273 078	*2273 078	*2273 078	*2273 078
	(black)	1	*2273 079	*2273 079	*2273 079	*2273 079	*2273 079
	Center Floor Pan Cover (Vinoleum) (blue)	1	---- ---	---- ---	*2272 406		
	(green)	1	---- ---	---- ---	*2272 407		
	(cordovan)	1	---- ---	---- ---	*2272 408		
	(gray)	1	---- ---	---- ---	*2272 409		
	Rear Floor Pan (blue)	1	---- ---	---- ---	*2272 410		
	(green)	1	---- ---	---- ---	*2272 411		
	(cordovan)	1	---- ---	---- ---	*2272 412		
	(gray)	1	---- ---	---- ---	*2272 413		
	Rear Floor Cover Panel (w/2 seater only) (blue)	1	---- ---	---- ---	*2272 414		
	(green)	1	---- ---	---- ---	*2272 415		
	(cordovan)	1	---- ---	---- ---	2272 416		
	(gray)	1	---- ---	---- ---	*2272 417		
	Floor Pan Axle Kickup Front Trim Panel (embossed cardboard) (paint as required)	1	---- ---	---- ---	*2249 857		

★ Indicates use as required.
⊟ Indicates parts not listed in any previous parts book.
March 8, 1963 Supersedes May 1, 1962.

Printed in U.S.A.
Prices and specifications subject to change without notice.
Right and left part numbers are on same line, first number is right, second number is left.
* Indicates change or addition.

MyMopar.com

CODE	REMARKS	PER CAR	SED.	SP. 4 D.	SUB.	SP. CL. CP.	CV. CP.
23-79-79	COVER, Tailgate Inside Panel						
	P1, P2 (vinoleum)						
	(codes 121, 131, 201) (blue)	1	---- ---	---- ---	2273 045		
	(codes 122, 132) (green)	1	---- ---	---- ---	2273 046		
	(codes 123, 133, 203) (cordovan)	1	---- ---	---- ---	2273 047		
	(codes 124, 125, 134, 204)(gray)	1	---- ---	---- ---	2273 048		
23-81-3	HANDLE, Rear Door Pull-To						
	P1-L, P2-L	1	1697 413				
23-81-8	SPACER, Rear Door Pull-To Handle						
	P1-L, P2-L	2	1964 579				
23-82-30	HOOK, Coat Hanger						
	P1, P2	2	2165 837	2165 837	2165 837	2165 837	
	(screw)	★	148 095	148 095	148 095	148 095	
23-84-3	PAD, Instrument Panel Trim						
	P1, P2, (LHD)						
	(codes 101, 111, 121, 131, 201, 211, 231, 241, 251, 261) (blue)	1	2273 053	2273 053	2273 053	2273 053	2273 053
	(codes 103, 113, 123, 133, 203, 253, 263) (cocoa)	1	2273 055	2273 055	2273 055	2273 055	2273 055
	(codes 104, 114, 124, 134, 204, 214, 234, 244, 254, 294)(gray)	1	2273 056	2273 056	2273 056	2273 056	2273 056
	(codes 112, 122, 132)(green)	1	2273 054	2273 054	2273 054	2273 054	2273 054
	(codes 115, 125, 245, 265) (red)	1	*2273 057	*2273 057	*2273 057	*2273 057	*2273 057
	P1. P2, (RHD.)						
	(codes 112, 122) (green)	1	2249 715				
	(codes 231, 241) (blue)	1	2249 711				
	(codes 114, 124, 234, 244) (gray)	1	2249 713				
	(clip)	★	*6008 222	*6008 222	*6008 222	*6008 222	*6008 222
23-86-3	HEADLINING and LISTING						
	P1, P2						
	(codes 211, 231, 241) (blue)	1	*2274 163				
	(codes 214, 234, 244, 294)(gray)	1	2274 164				
	P1, P2, (vinyl)						
	(codes 101, 111, 121, 251) (blue)	1	⊟2431 939				
	(codes 103, 113, 123, 253) (tan)	1	⊟2431 940				
	(codes 104, 114, 115, 124, 125, 245) (gray)	1	⊟2431 941				
	Vinyl (codes 112, 122) (green)	1	*2411 018				
	P1, P2 (No. 1)	1	---- ---	2274 710	2273 461	2274 710	
	(No. 2)	1	---- ---	2274 711	2273 462	2274 711	
	(No. 3)	1	---- ---	2274 712	2273 463	2274 712	
	(No. 4)	1	---- ---	2274 713	2273 464	2274 713	
	(No. 5)	1	---- ---	---- ---	2273 465		
	(No. 6)	1	---- ---	---- ---	2273 466		
	(2 seat) (No. 7)	1	---- ---	---- ---	2273 467		
	(3 seat) (No. 7)	1	---- ---	---- ---	2273 467		
23-86-10	BOW, Headlining and Listing						
	P1, P2 (No. 1)	1	2166 267	2166 267	2166 267	2166 267	
	(No. 2)	1	2166 268	2166 268	2166 268	2166 268	
	(Nos. 3 and 4)	1	---- ---	---- ---	2166 269		
23-86-16	SUPPORT, Roof Inside Finish Panel on Roof Rail						
	P1, P2	12	---- ---	2216 461	---- ---	2216 461	
	(fastener)	12	---- ---	6000 922	---- ---	6000 922	

★ Indicates use as required.
⊟ Indicates parts not listed in any previous parts book.
Right and left part numbers are on same line, first number is right, second number is left.
* Indicates change or addition.

Printed in U.S.A.
Prices and specifications subject to change without notice.
March 8, 1963 Supersedes May 1, 1962.

MyMopar.com

CODE	REMARKS	PER CAR	SED.	SP. 4 D.	SUB.	SP. CL. CP.	CV. CP.
23-86-19	STRIP, Headlining Retaining						
	P1, P2 Front	1	2167 228-9				
	Rear	1	2254 566-7				
	Side Front	1	---- ---	---- ---	2251 806-7		
	Side Rear	1	---- ---	---- ---	2251 446-7		
	Rear	1	---- ---	---- ---	2251 448		
	Corner Rear	1	---- ---	---- ---	2251 444-5		
23-86-24	RETAINER, Roof Inside Finish Panel						
	P1, P2 (No. 1)	1	---- ---	2162 893	2292 162	2162 893	
	(No. 2)	1	---- ---	2162 894	2292 163	2162 894	
	(No. 3)	1	---- ---	2162 895	2292 164	2162 895	
	(No. 4)	1	---- ---	---- ---	2292 165		
	(No. 5)	1	---- ---	---- ---	2292 166		
	(No. 6)	1	---- ---	---- ---	2292 167		
23-86-35	MOULDING, Roof Inside Finish Panel						
	P1-M, P2-M (No. 1)	1	---- ---	---- ---	2292 377	2292 373	
	(No. 2)	1	---- ---	---- ---	2292 377	2292 375	
	(No. 3)	1	---- ---	---- ---	2292 377	2292 377	
	(No. 4 thru No. 6)	1	---- ---	---- ---	2292 377		
	P1-H, P2-H, P2-P (No. 1)	1	---- ---	2292 372	1905 449	2292 372	
	(No. 2)	1	---- ---	2292 374	1905 449	2292 374	
	(No. 3)	1	---- ---	2292 376	1905 449	2292 376	
	(No. 4 thru No. 6)	1	---- ---	---- ---	1905 449		
23-86-36	CAP, Roof Inside Finish Moulding						
	P1, P2	12	---- ---	---- ---	1759 635		
	(side retainer)	1	---- ---	---- ---	2251 808-9		
23-91-6	PANEL, Cowl Trim						
	P1, P2						
	(codes 101, 111, 121, 131, 201, 211, 231, 241, 251) (blue)	1	2272 208-9	2272 208-9	2272 208-9	2272 208-9	2272 208-9
	(codes 103, 113, 123, 133, 203, 253) (cocoa)	1	2272 210-11	2272 210-11	2272 210-11	2272 210-11	2272 210-11
	(codes 104, 114, 124, 134, 204, 214, 234, 244, 254, 294)(gray)	1	2272 212-3	2272 212-3	2272 212-3	2272 212-3	2272 212-3
	(codes 112, 122, 132) (green)	1	2272 214-5	2272 214-5	2272 214-5	2272 214-5	
	(codes 115, 125, 245)(red)	1	*2272 216-7	*2272 216-7	*2272 216-7	*2272 216-7	*2272 216-7
	(code 261) (blue)	1	---- ---	---- ---	---- ---	2249 742-3	2249 742-3
	(code 263) (cordovan)	1	---- ---	---- ---	---- ---	2249 744-5	2249 744-5
	(code 265) (black)	1	---- ---	---- ---	---- ---	2297 154-5	2297 154-5
	(attach. screw and seal)	1	*6023 388	*6023 388	*6023 388	*6023 388	*6023 388
23-92-5	PANEL, Door Trim						
	P1-L, P2-L, (2 D.)						
	(code 101)	1	2273 094-5				
	(code 103)	1	2273 096-7				
	(code 104)	1	2273 098-9				
	(code 294)	1	2273 482-3				
	P1-L, P2-L, (4 D.)						
	(codes 101, 201, 211) Front	1	2273 110-11	---- ---	2273 110-11		
	Rear	1	2273 116-7	---- ---	2273 116-7		
	(codes 103, 203) Front	1	2273 112-3	---- ---	2273 112-3		
	Rear	1	2273 118-9	---- ---	2273 118-9		
	(codes 104, 204, 214) Front	1	2273 114-5	---- ---	2273 114-5		
	Rear	1	2273 120-1	---- ---	2273 120-1		
	(code 294) Front	1	2273 486-7				
	Rear	1	2273 488-9				

★ Indicates use as required.
⊖ Indicates parts not listed in any previous parts book.
May 1, 1962 Supersedes Nov. 30, 1961.

Printed in U.S.A.
Prices and specifications subject to change without notice.
Right and left part numbers are on same line, first number is right, second number is left.
* Indicates change or addition.

MyMopar.com

CODE	REMARKS		PER CAR	SED.	SP. 4 D.	SUB.	SP. CL. CP.	CV. CP.
23-92-5	PANEL, Door Trim - Cont'd							
	P1-M, P2-M (2 D.)							
	(code 111)		1	2273 126-7	---- ---	---- ---	2273 146-7	
	(code 112)		1	2273 128-9	---- ---	---- ---	2273 148-9	
	(code 113)		1	2273 130-1	---- ---	---- ---	2273 150-1	
	(code 114)		1	2273 132-3	---- ---	---- ---	2273 152-3	
	(code 115)		1	2249 868-9	---- ---	---- ---	2249 872-3	
	P1-M, P2-M, (4 D.)							
	(codes 111, 131, 231)	Front	1	2273 166-7	---- ---	2273 166-7		
		Rear	1	2273 174-5	---- ---	2273 174-5		
	(codes 112, 132)	Front	1	2273 168-9	---- ---	2273 168-9		
		Rear	1	2273 176-7	---- ---	2273 176-7		
	(codes 113, 133)	Front	1	2273 170-1	---- ---	2273 170-1		
		Rear	1	2273 178-9	---- ---	2273 178-9		
	(codes 114, 134, 234)	Front	1	2273 172-3	---- ---	2273 172-3		
		Rear	1	2273 180-1	---- ---	2273 180-1		
	(code 115)	Front	1	2249 878-9				
		Rear	1	2249 880-1				
	P1-H, P2-H							
	(codes 121, 241, 251)	Front	1	2273 226-7	2273 252-3	2273 226-7	2273 188-9	2273 188-9
		Rear	1	2273 236-7	2273 262-3	2273 236-7		
	(code 122)	Front	1	2273 228-9	2273 254-5	2273 228-9	2273 190-1	
		Rear	1	2273 238-9	2273 264-5	2273 238-9		
	(codes 123, 253)	Front	1	2273 230-1	2273 256-7	2273 230-1	2273 192-3	2273 192-3
		Rear	1	2273 240-1	2273 266-7	2273 240-1		
	(codes 124, 244, 254)	Front	1	2273 232-3	2273 258-9	2273 232-3	2273 194-5	2273 194-5
		Rear	1	2273 242-3	2273 268-9	2273 242-3		
	(codes 125, 245)	Front	1	2273 234-5	2273 260-1	2273 234-5	2273 196-7	2273 196-7
		Rear	1	2273 244-5	2273 270-1	2273 244-5		
	P2-P							
	(code 261)		1	---- ---	---- ---	---- ---	2249 720-1	2249 720-1
	(code 263)		1	---- ---	---- ---	---- ---	2249 722-3	2249 722-3
	(code 265)		1	---- ---	---- ---	---- ---	2249 724-5	2249 724-5
23-96-3	PANEL, Luggage Compartment Front Lining							
	P1, P2		1	2162 831	2162 831	---- ---	2162 831	
	(side to quarter) (filler)		1	2292 876-7	---- ---	---- ---	2292 876-7	
23-96-8	COVER, Wheelhouse Inner Panel (paint as required)							
	P1, P2	(side)	1	2274 718-9	2274 718-9	---- ---	2274 718-9	
	(2 seat)		1	---- ---	---- ---	2273 348-9		
	(3 seat)		1	---- ---	---- ---	2273 476-7		
	Rear Extension (3 seat)		1	---- ---	---- ---	2273 358-9		
		Side Front	1	---- ---	---- ---	---- ---	---- ---	2249 700-1
		Side Rear	1	---- ---	---- ---	---- ---	---- ---	2274 878-9
	Deck Lid Hinge (vinoleum)		1	---- ---	---- ---	---- ---	---- ---	2411 668-9
	(attaching clip)		6	6001 401	6001 401	---- ---	6001 401	6001 401
	(screw)		6	---- ---	---- ---	6000 348		
23-96-9	CLIP, Retaining		★	*2165 272	*2165 272	---- ---	*2165 272	*2165 272
23-96-41	RETAINER, Wheelhouse and Lower Quarter Trim Cover							
	P1, P2, Upper Edge, Plastic		10	---- ---	---- ---	2273 453		
	SCREW		★	---- ---	---- ---	*6000 348		
23-99-4	COVER, Center Pillar Trim (paint as required)							
	P1-H, P2-H		1	---- ---	2273 422-3			

★ Indicates use as required.
⊟ Indicates parts not listed in any previous parts book.
Right and left part numbers are on same line, first number is right, second number is left.
* Indicates change or addition.

Printed in U.S.A.
Prices and specifications subject to change without notice.
March 8, 1963 Supersedes May 1, 1962.

MyMopar.com

CODE	REMARKS	PER CAR	SED.	SP. 4 D.	SUB.	SP. CL. CP.	CV. CP.
23-99-9	RETAINER, Body Rear Lock Pillar Quarter Trim						
	P1, P2	1	---- ---	---- ---	2162 508-9		
23-101-3	PANEL, Rear Quarter Trim						
	P1-L, P2-L, (2 D.)						
	(code 101)	1	2273 100-1				
	(code 103)	1	2273 102-3				
	(code 104)	1	2273 104-5				
	(code 294)	1	2273 484-5				
	P1-M, P2-M, (2 D.)						
	(code 111)	1	2273 134-5	---- ---	---- ---	2273 154-5	
	(code 112)	1	2273 136-7	---- ---	---- ---	2273 156-7	
	(code 113)	1	2273 138-9	---- ---	---- ---	2273 158-9	
	(code 114)	1	2273 140-1	---- ---	---- ---	2273 160-1	
	(code 115)	1	*2249 870-1	---- ---	---- ---	*2249 874-5	
	(code 294)	1	2273 484-5				
	P1, P2, (4 D.)						
	(codes 101, 111, 121, 211, 231, 241, 251) Upper	1	2411 042-3	2411 042-3			
	Lower	1	2411 052-3	*2411 052-3			
	(codes 103, 113, 123, 253)						
	Upper	1	2411 046-7	2411 046-7			
	Lower	1	2411 056-7	2411 056-7			
	(codes 104, 114, 124, 214, 234, 244, 294) Upper	1	2411 048-9	2411 048-9			
	Lower	1	2411 058-9	2411 058-9			
	(code 115) Upper	1	*2429 196-7				
	Lower	1	*2429 198-9				
	(codes 112, 122) Upper	1	2411 044-5	2411 044-5			
	Lower	1	2411 054-5	2411 054-5			
	(codes 125, 245) Upper	1	2411 050-1	2411 050-1			
	Lower	1	2411 060-1	2411 060-1			
	P1-H, P2-H						
	(codes 121, 251)	1	---- ---	---- ---	---- ---	2273 198-9	2273 212-3
	(code 122)	1	---- ---	---- ---	---- ---	2273 200-1	
	(codes 123, 253)	1	---- ---	---- ---	---- ---	2273 202-3	2273 214-5
	(codes 124, 254)	1	---- ---	---- ---	---- ---	2273 204-5	2273 216-7
	(codes 125, 245)	1	---- ---	---- ---	---- ---	2273 206-7	2273 218-9
	P2-P						
	(code 261)	1	---- ---	---- ---	---- ---	2249 726-7	2249 736-7
	(code 263)	1	---- ---	---- ---	---- ---	2249 728-9	2249 738-9
	(code 265)	1	---- ---	---- ---	---- ---	2249 730-1	2249 740-1
23-101-14	COVER, Upper Quarter Front Trim (paint as required)						
	P1, P2	1	---- ---	---- ---	2273 338-9		
23-101-26	STRIP, Quarter Trim Panel Retaining						
	P1, P2, (4 D.)	1	*2252 372-3				
23-102-3	PANEL, Rear Seat Shelf (paint as required)						
	P1, P2	1	2297 038	2297 038	---- ---	2297 038	
	(fastener)	★	6000 903	6000 903	---- ---	6000 903	
23-103-3	PANEL, Visor Trim						
	P1, P2						
	(codes 101, 111, 121, 211, 231, 241, 251) (blue)	2	2273 282				
	(codes 103, 113, 123, 253) (beige)	2	2273 284				

★ Indicates use as required.
⊟ Indicates parts not listed in any previous parts book.
May 1, 1962 Supersedes Nov. 30, 1961.

Printed in U.S.A.
Prices and specifications subject to change without notice.
Right and left part numbers are on same line, first number is right, second number is left.
* Indicates change or addition.

MyMopar.com

CODE	REMARKS	PER CAR	SED.	SP. 4 D.	SUB.	SP. CL. CP.	CV. CP.
23-103-3	PANEL, Visor Trim - Cont'd						
	P1, P2						
	(codes 104, 114, 115, 124, 125, 214, 234, 244, 245, 294) (gray)	2	*2273 285				
	(codes 112, 122) (green)	2	2273 283				
	P1, P2, (padded) (white)	2	2273 455	2273 455	2273 455	2273 455	
	(codes 111, 112, 113, 114, 121, 122, 123, 124, 125, 131, 132, 133, 134, 201, 203, 204, 245, 251, 253, 261, 263, 265)(white)	2	---- ---	2273 286	2273 286	2273 286	
	(codes 245, 265) (red)	2	---- ---	---- ---	---- ---	---- ---	2273 281
	(codes 251, 261) (blue)	2	---- ---	---- ---	---- ---	---- ---	2273 278
	(codes 253, 263) (cocoa)	2	---- ---	---- ---	---- ---	---- ---	2273 279
	(code 254) (gray)	2	---- ---	---- ---	---- ---	---- ---	2273 280
23-103-10	ARM and BRACKET, Visor						
	P1, P2 (except P2-P)	1	2162 626-7	2162 626-7	2162 616-7	2162 626-7	2162 686-7
	P2-P (chrome)	1	---- ---	---- ---	---- ---	2292 894-5	2162 686-7
23-103-18	WASHER, Visor Arm Tension						
	P1, P2	2	6000 106	6000 106	6000 106	6000 106	6000 106
23-103-48	SUPPORT, Visor Inner						
	P1, P2 (3 1/8")	2	2162 628	2162 628	2162 628	2162 628	2162 628
23-108-4	CUSHION, Front Seat						
	P1-L, P2-L, (2 D.)						
	(code 101)	1	2246 704				
	(w/heavy duty spring)	1	2246 707				
	(w/airfoam pad)	1	2293 991				
	(code 103)	1	2246 705				
	(w/heavy duty spring)	1	2246 708				
	(w/airfoam pad)	1	2293 992				
	(code 104)	1	2246 706				
	(w/heavy duty spring)	1	2246 709				
	(w/airfoam pad)	1	2293 993				
	(code 294)	1	2293 652				
	P1-L, P2-L, (4 D.)						
	(codes 101, 201)	1	2246 650	---- ---	2274 287		
	(w/heavy duty spring)	1	2246 686	---- ---	2274 290		
	(w/airfoam pad)	1	2411 009	---- ---	2411 000		
	(codes 103, 203)	1	2246 651	---- ---	2274 288		
	(w/heavy duty spring)	1	2246 687	---- ---	2274 291		
	(w/airfoam pad)	1	2411 010	---- ---	2411 001		
	(codes 104, 204)	1	2246 652	---- ---	2274 289		
	(w/heavy duty spring)	1	2246 688	---- ---	2274 292		
	(w/airfoam pad)	1	2411 011	---- ---	2411 002		
	(code 211)	1	2293 962				
	(w/airfoam pad)	1	2271 902				
	(code 214)	1	2293 963				
	(w/airfoam pad)	1	2271 903				
	(code 294)	1	2293 636				
	(w/heavy duty spring)	1	2293 637				
	(w/airfoam pad)	1	2293 826				
	P1-M, P2-M, (2 D.)						
	(code 111)	1	2246 990	---- ---	---- ---	2246 990	
	(w/heavy duty spring)	1	2246 994	---- ---	---- ---	2246 994	
	(code 112)	1	2246 991	---- ---	---- ---	2246 991	
	(w/heavy duty spring)	1	2246 995	---- ---	---- ---	2246 995	
	(code 113)	1	2246 992	---- ---	---- ---	2246 992	
	(w/heavy duty spring)	1	2246 996	---- ---	---- ---	2246 996	
	(code 114)	1	2246 993	---- ---	---- ---	2246 993	

★ Indicates use as required.
⊟ Indicates parts not listed in any previous parts book.
Right and left part numbers are on same line, first number is right, second number is left.
* Indicates change or addition.

Printed in U.S.A.
Prices and specifications subject to change without notice.
May 1, 1962 Supersedes Nov. 30, 1961.

MyMopar.com

CODE	REMARKS	PER CAR	SED.	SP. 4 D.	SUB.	SP. CL. CP.	CV. CP.
23-108-4	CUSHION, Front Seat - Cont'd						
	P1-M, P2-M (2 D.)						
	(code 115)	1	---- ---	---- ---	---- ---	*2429 225	*2429 225
	(w/heavy duty springs)	1	---- ---	---- ---	---- ---	*2429 226	*2429 226
	(w/heavy duty spring)	1	2246 997	---- ---	---- ---	2246 997	
	(code 294)	1	2293 652				
	(w/heavy duty spring)	1	2293 653				
	(w/airfoam pad)	1	2293 819				
	P1-M, P2-M, (4 D.)						
	(codes 111, 131)	1	2246 898	---- ---	2246 958		
	(w/heavy duty spring)	1	2246 902	---- ---	2246 962		
	(codes 112, 132)	1	2246 899	---- ---	2246 959		
	(w/heavy duty spring)	1	2246 903	---- ---	2246 963		
	(codes 113, 133)	1	2246 900	---- ---	2246 960		
	(w/heavy duty spring)	1	2246 904	---- ---	2246 964		
	(codes 114, 134)	1	2246 901	---- ---	2246 961		
	(w/heavy duty spring)	1	2246 905	---- ---	2246 965		
	(code 115)	1	*2429 205				
	(w/heavy duty springs)	1	*2429 206				
	(code 231)	1	2271 902				
	(code 234)	1	2271 903				
	(code 294)	1	2293 636				
	(w/heavy duty spring)	1	2293 637				
	(w/airfoam pad)	1	2293 826				
	P1-H, P2-H						
	(code 121)	1	2272 876	2272 876	2272 876	2272 961	
	(w/elec. seat 6 way)	1	2272 881	2272 881	2272 881	2272 966	
	(code 122)	1	2272 877	2272 877	2272 877	2272 962	
	(w/elec. seat 6 way)	1	2272 882	2272 882	2272 882	2272 967	
	(code 123)	1	2272 878	2272 878	2272 878	2272 963	
	(w/elec. seat 6 way)	1	2272 883	2272 883	2272 883	2272 968	
	(code 124)	1	2272 879	2272 879	2272 879	2272 964	
	(w/elec. seat 6 way)	1	2272 884	2272 884	2272 884	2272 969	
	(code 125)	1	2272 880	2272 880	2272 880	2272 965	
	(w/elec. seat 6 way)	1	2272 885	2272 885	2272 885	2272 970	
	(code 241)	1	2271 902				
	(code 244)	1	2271 903				
	(code 245)	1	2293 742	2293 742	---- ---	2293 760	2293 760
	(w/elec. seat 6 way)	1	2293 743	2293 743	---- ---	2293 761	2293 761
	(code 251)	1	2293 861	2293 861	---- ---	2293 865	2293 865
	(w/elec. seat 6 way)	1	2293 863	2293 863	---- ---	2293 868	2293 868
	(code 253)	1	2293 862	2293 862	---- ---	2293 866	2293 866
	(w/elec. seat 6 way)	1	2293 864	2293 864	---- ---	2293 869	2293 869
	(code 254)	1	---- ---	---- ---	---- ---	---- ---	2293 867
	(w/elec. seat 6 way)	1	---- ---	---- ---	---- ---	---- ---	2293 870
	P2-P						
	(code 261)	1	---- ---	---- ---	---- ---	2411 116-7	2411 116-7
	(code 263)	1	---- ---	---- ---	---- ---	2411 118-9	2411 118-9
	(code 265)	1	---- ---	---- ---	---- ---	2411 120-1	2411 120-1
23-108-5	COVER, Front Seat Cushion						
	P1-L, P2-L, (2 D.)						
	(code 101)	1	2246 701				
	(code 103)	1	2246 702				
	(code 104)	1	2246 703				
	(code 294)	1	2293 651				
	P1-L, P2-L, (4 D.)						
	(codes 101, 201)	1	2246 647	---- ---	2274 284		
	(codes 103, 203)	1	2246 648	---- ---	2274 285		
	(codes 104, 204)	1	2246 649	---- ---	2274 286		
	(code 211)	1	2271 900				
	(code 214)	1	2271 901				
	(code 294)	1	2293 635				

★ Indicates use as required.
⊟ Indicates parts not listed in any previous parts book.
May 1, 1962 Supersedes Nov. 30, 1961.

Printed in U.S.A.
Prices and specifications subject to change without notice.
Right and left part numbers are on same line, first number is right, second number is left.
* Indicates change or addition.

MyMopar.com

CODE	REMARKS	PER CAR	SED.	SP. 4 D.	SUB.	SP. CL. CP.	CV. CP.
23-108-5	COVER, Front Seat Cushion-Cont'd						
	P1-M, P2-M, (2 D.)						
	(code 111)	1	2246 986	---- ---	---- ---	2246 986	
	(code 112)	1	2246 987	---- ---	---- ---	2246 987	
	(code 113)	1	2246 988	---- ---	---- ---	2246 988	
	(code 114)	1	2246 989	---- ---	---- ---	2246 989	
	(code 115)	1	*2429 224	---- ---	---- ---	*2429 224	
	(code 294)	1	2293 651				
	P1-M, P2-M, (4 D.)						
	(codes 111, 131)	1	2246 894	---- ---	2246 954		
	(codes 112, 132)	1	2246 895	---- ---	2246 955		
	(codes 113, 133)	1	2246 896	---- ---	2246 956		
	(codes 114, 134)	1	2246 897	---- ---	2246 957		
	(code 115)	1	*2429 204				
	(code 231)	1	2271 900				
	(code 234)	1	2271 901				
	(code 294)	1	2293 635				
	P1-H, P2-H						
	(code 121)	1	2272 871	2272 871	2272 871	2272 956	
	(code 122)	1	2272 872	2272 872	2272 872	2272 957	
	(code 123)	1	2272 873	2272 873	2272 873	2272 958	
	(code 124)	1	2272 874	2272 874	2272 874	2272 959	
	(code 125)	1	2272 875	2272 875	2272 875	2272 960	
	(code 241)	1	2271 900				
	(code 244)	1	2271 901				
	(code 245)	1	2293 740	2293 740	---- ---	2293 740	2293 740
	(code 251)	1	2293 855	2293 855	---- ---	2293 855	2293 855
	(code 253)	1	2293 856	2293 856	---- ---	2293 856	2293 856
	(code 254)	1	---- ---	---- ---	---- ---	---- ---	2293 857
	P2-P						
	(code 261)	2	---- ---	---- ---	---- ---	2411 113	2411 113
	(code 263)	2	---- ---	---- ---	---- ---	2411 114	2411 114
	(code 265)	2	---- ---	---- ---	---- ---	2411 115	2411 115
23-108-12	SEAT, Front (less cushion)						
	P1-L, P2-L, (2 D.)						
	(code 101)	1	2246 716-7				
	(w/heavy duty spring)	1	2246 722-3				
	(w/ash receiver) Right	1	2293 804				
	(w/heavy duty springs and ash receiver)	1	*2414 932				
	(code 103)	1	2246 718-9				
	(w/heavy duty spring)	1	2246 724-5				
	(w/ash receiver) Right	1	2293 805				
	(w/heavy duty springs and ash receiver)	1	*2414 933				
	(code 104)	1	2246 720-1				
	(w/heavy duty spring)	1	2246 726-7				
	(w/ash receiver) Right	1	2293 806				
	(w/heavy duty springs and ash receiver)	1	*2414 934				
	(code 294)	1	2293 656-7				
	(w/heavy duty spring)	1	2293 658-9				
	(w/ash receiver) Right	1	2293 820				
	(w/heavy duty spring and ash receiver)	1	*2414 935				
	P1-L, P2-L, (4 D.)						
	(codes 101, 201)	1	2246 656	---- ---	2274 296		
	(w/heavy duty spring)	1	2246 689	---- ---	2274 299		
	(w/ash receiver)	1	2293 789	---- ---	2293 810		

★ Indicates use as required.
⊟ Indicates parts not listed in any previous parts book.
Right and left part numbers are on same line, first number is right, second number is left.
* Indicates change or addition.

Printed in U.S.A.
Prices and specifications subject to change without notice.
May 1, 1962 Supersedes Nov. 30, 1961.

MyMopar.com

CODE	REMARKS	PER CAR	SED.	SP. 4 D.	SUB.	SP. CL. CP.	CV. CP.
23-108-12	SEAT, Front (less cushion) - Cont'd						
	P1-L, P2-L (4 D.)						
	(codes 103, 203)	1	2246 657	---- ---	2274 297		
	(w/heavy duty spring)	1	2246 690	---- ---	2274 300		
	(w/ash receiver)	1	2293 790	---- ---	2293 811		
	(codes 104, 204)	1	2246 658	---- ---	2274 298		
	(w/heavy duty spring)	1	2246 691	---- ---	2274 301		
	(w/ash receiver)	1	2293 791	---- ---	2293 812		
	P1-L, P2-L, P1-M, P2-M, P1-H, P2-H, (4 D.)						
	(codes 211, 231, 241)	1	2271 906				
	(codes 214, 234, 244)	1	2271 907				
	(code 294)	1	2293 639				
	(w/heavy duty spring)	1	2293 640				
	(w/ash receiver)	1	2293 827				
	P1-M, P2-M, (2 D.)						
	(code 111)	1	2272 781-2	---- ---	---- ---	2272 781-2	
	(w/heavy duty spring)	1	2272 789-90	---- ---	---- ---	2272 789-90	
	(code 112)	1	2272 783-4	---- ---	---- ---	2272 783-4	
	(w/heavy duty spring)	1	2272 791-2	---- ---	---- ---	2272 791-2	
	(code 113)	1	2272 785-6	---- ---	---- ---	2272 785-6	
	(w/heavy duty spring)	1	2272 793-4				
	(code 114)	1	2272 787-8	---- ---	---- ---	2272 787-8	
	(w/heavy duty spring)	1	2272 795-6				
	(code 115)	1	*2429 230-1	---- ---	---- ---	*2429 230-1	
	(w/heavy duty springs)	1	*2429 232-3	---- ---	---- ---	*2429 232-3	
	(code 294)	1	2293 656-7				
	(w/heavy duty spring)	1	2293 658-9				
	(w/ash receiver) Right	1	2293 820				
	P1-M, P2-M, (4 D.)						
	(codes 111, 131)	1	2246 914	---- ---	2246 970		
	(w/heavy duty spring)	1	2246 918	---- ---	2246 974		
	(codes 112, 132)	1	2246 915	---- ---	2246 971		
	(w/heavy duty spring)	1	2246 919	---- ---	2246 975		
	(codes 113, 133)	1	2246 916	---- ---	2246 972		
	(w/heavy duty spring)	1	2246 920	---- ---	2246 976		
	(codes 114, 134)	1	2246 917	---- ---	2246 973		
	(w/heavy duty spring)	1	2246 921	---- ---	2246 977		
	(code 115)	1	*2429 209				
	(w/heavy duty springs)	1	*2429 210				
	P1-H, P2-H						
	(code 121)	1	2272 896	2272 896	2272 896	2272 981-2	
	(code 122)	1	2272 897	2272 897	2272 897	2272 983-4	
	(code 123)	1	2272 898	2272 898	2272 898	2272 985-6	
	(code 124)	1	2272 899	2272 899	2272 899	2272 987-8	
	(code 125)	1	2272 900	2272 900	2272 900	2272 989-90	
	(code 245)	1	2293 748-9	2293 748-9	---- ---	2293 762-3	2293 762-3
	(code 251)	1	2293 880-1	2293 880-1	---- ---	2293 884-5	2293 884-5
	(code 253)	1	2293 882-3	2293 882-3	---- ---	2293 886-7	2293 886-7
	(code 254)	1	---- ---	---- ---	---- ---	---- ---	2293 888-9
23-108-15	SPRING and COVER, Front Seat Back						
	P2-P						
	(code 261)	2	---- ---	---- ---	---- ---	*2411 128	*2411 128
	(code 263)	2	---- ---	---- ---	---- ---	*2411 129	*2411 129
	(code 265)	2	---- ---	---- ---	---- ---	*2411 130	*2411 130

★ Indicates use as required.
⊟ Indicates parts not listed in any previous parts book.
May 1, 1962 Supersedes Nov. 30, 1961..

Printed in U.S.A.
Prices and specifications subject to change without notice.
Right and left part numbers are on same line, first number is right, second number is left.
* Indicates change or addition.

MyMopar.com

CODE	REMARKS	PER CAR	SED.	SP. 4 D.	SUB.	SP. CL. CP.	CV. CP.
23-108-16	COVER, Front Seat Back						
	P1-L, P2-L, (2 D.)						
	(code 101)	1	2246 710-11				
	(code 103)	1	2246 712-3				
	(code 104)	1	2246 714-5				
	(code 294)	1	2293 654-5				
	P1-L, P2-L, (4 D.)						
	(codes 101, 201)	1	2246 653	---- ---	2274 293		
	(codes 103, 203)	1	2246 654	---- ---	2274 294		
	(codes 104, 204)	1	2246 655	---- ---	2274 295		
	(code 211)	1	2271 904				
	(code 214)	1	2271 905				
	(code 294)	1	2293 638				
	P1-M, P2-M, (2 D.)						
	(code 111)	1	2272 773-4	---- ---	---- ---	2272 773-4	
	(code 112)	1	2272 775-6	---- ---	---- ---	2272 775-6	
	(code 113)	1	2272 777-8	---- ---	---- ---	2272 777-8	
	(code 114)	1	2272 779-80	---- ---	---- ---	2272 779-80	
	(code 115)	1	2429 228-9	---- ---	---- ---	2429 228-9	
	(code 294)	1	2293 654-5				
	P1-M, P2-M, (4 D.)						
	(codes 111, 131)	1	2246 910	---- ---	2246 966		
	(codes 112, 132)	1	2246 911	---- ---	2246 967		
	(codes 113, 133)	1	2246 912	---- ---	2246 968		
	(codes 114, 134)	1	2246 913	---- ---	2246 969		
	(code 115)	1	2429 208				
	(code 231)	1	2271 904				
	(code 234)	1	2271 905				
	(code 294)	1	2293 638				
	P1-H, P2-H						
	(code 121)	1	2272 891	2272 891	2272 891	2272 971-2	
	(code 122)	1	2272 892	2272 892	2272 892	2272 973-4	
	(code 123)	1	2272 893	2272 893	2272 893	2272 975-6	
	(code 124)	1	2272 894	2272 894	2272 894	2272 977-8	
	(code 125)	1	2272 895	2272 895	2272 895	2272 979-80	
	(code 241)	1	2271 904				
	(code 244)	1	2271 905				
	(code 245)	1	*2293 744-5	2293 744-5	---- ---	2293 744-5	2293 744-5
	(code 251)	1	2293 874-5	2293 874-5	---- ---	2293 874-5	2293 874-5
	(code 253)	1	2293 876-7	2293 876-7	---- ---	2293 876-7	2293 876-7
	(code 254)	1	---- ---	---- ---	---- ---	---- ---	2293 878-9
	P2-P						
	(code 261)	2	---- ---	---- ---	---- ---	2411 125	2411 125
	(code 263)	2	---- ---	---- ---	---- ---	2411 126	2411 126
	(code 265)	2	---- ---	---- ---	---- ---	2411 127	2411 127
23-108-32	PANEL, Back of Front Seat Back						
	P2-P (panel and cover)						
	(code 261)	2	---- ---	---- ---	---- ---	2411 134	2411 134
	(code 263)	2	---- ---	---- ---	---- ---	2411 135	2411 135
	(code 265)	2	---- ---	---- ---	---- ---	2411 136	2411 136
23-108-84	COVER, Front Seat Back Outer Hinge Arm						
	P1, P2						
	(codes 101, 111, 121, 251) (blue)	1	2272 476-7	2272 476-7	---- ---	2272 476-7	2272 476-7
	(codes 103, 113, 123, 253) (cocoa)	1	2272 480-1	2272 480-1	---- ---	2272 480-1	2272 480-1

★ Indicates use as required.
⊟ Indicates parts not listed in any previous parts book.
Right and left part numbers are on same line, first number is right, second number is left.
* Indicates change or addition.

Printed in U.S.A.
Prices and specifications subject to change without notice.
March 8, 1963 Supersedes May 1, 1962.

MyMopar.com

CODE	REMARKS	PER CAR	SED.	SP. 4 D.	SUB.	SP. CL. CP.	CV. CP.
23-108-84	COVER, Front Seat Back Outer Hinge Arm - Cont'd						
	P1, P2						
	(codes 104, 114, 125, 254, 294) (gray)	1	2272 482-3	---- ---	---- ---	2272 482-3	2272 482-3
	(codes 112, 122) (green)	1	2272 478-9	---- ---	---- ---	2272 478-9	
	(codes 125, 245) (red)	1	2272 484-5	2272 484-5	---- ---	2272 484-5	2272 484-5
23-108-98	SHIELD, Front Seat Side						
	P2-P (back)	2	---- ---	---- ---	---- ---	*2161 236-7	*2161 236-7
	(cushion)	1	---- ---	---- ---	---- ---	*2292 492-3	*2292 492-3
23-109-3	BACK, Rear Seat						
	P1-L, P2-L, (Sub. 2nd. Seat)						
	(codes 101, 201)	1	2246 668	---- ---	*2414 871		
	(w/heavy duty spring)	1	2246 698				
	(codes 103, 203)	1	2246 669	---- ---	*2414 872		
	(w/heavy duty spring)	1	2246 699				
	(codes 104, 204)	1	2246 670	---- ---	*2414 873		
	(w/heavy duty spring)	1	2246 700				
	(code 211)	1	2271 918				
	(code 214)	1	2271 919				
	P1-M, P2-M, (Sub. 2nd. Seat)						
	(codes 111, 131)	1	2246 946	---- ---	*2414 889	2246 946	
	(w/heavy duty spring)	1	2246 950	---- ---	---- ---	2246 950	
	(codes 112, 132)	1	2246 947	---- ---	*2414 890	2246 947	
	(w/heavy duty spring)	1	2246 951	---- ---	---- ---	2246 951	
	(codes 113, 133)	1	2246 948	---- ---	*2414 891	2246 948	
	(w/heavy duty spring)	1	2246 952	---- ---	---- ---	2246 952	
	(codes 114, 134)	1	2246 949	---- ---	*2414 892	2246 949	
	(w/heavy duty spring)	1	2246 953	---- ---	---- ---	2246 953	
	(code 115)	1	*2429 218	---- ---	---- ---	*2429 218	
	(w/heavy duty springs)	1	*2429 219	---- ---	---- ---	*2429 219	
	(code 231)	1	2271 918				
	(code 234)	1	2271 919				
	(code 294)	1	2293 649				
	(w/heavy duty spring)	1	2293 650				
	P1-M, P2-M, (Sub. 3rd. Seat)						
	(code 131)	1	---- ---	---- ---	2274 207		
	(code 132)	1	---- ---	---- ---	2274 208		
	(code 133)	1	---- ---	---- ---	2274 209		
	(code 134)	1	---- ---	---- ---	2274 210		
	P1-H, P2-H, (Sub. 2nd. Seat)						
	(code 121)	1	2272 946	2272 946	*2414 922	2272 946	
	(code 122)	1	2272 947	2272 947	*2414 923	2272 947	
	(code 123)	1	2272 948	2272 948	*2414 924	2272 948	
	(code 124)	1	2272 949	2272 949	*2414 925	2272 949	
	(code 125)	1	2272 950	2272 950	*2414 926	2272 950	
	(code 241)	1	2271 918				
	(code 244)	1	2271 919				
	(code 245)	1	2293 759	2293 759	---- ---	2293 759	2293 773
	(code 251)	1	2293 918	2293 918	---- ---	2293 918	2293 935
	(code 253)	1	2293 919	2293 919	---- ---	2293 919	2293 936
	(code 254)	1	---- ---	---- ---	---- ---	---- ---	2293 937
	P1-H, P2-H, (Sub. 3rd. Seat)						
	(code 121)	1	---- ---	---- ---	2274 265		
	(code 122)	1	---- ---	---- ---	2274 266		
	(code 123)	1	---- ---	---- ---	2274 267		
	(code 124)	1	---- ---	---- ---	2274 268		
	(code 125)	1	---- ---	---- ---	2274 269		
	P2-P						
	(code 261)	1	---- ---	---- ---	---- ---	2411 173	2411 182
	(code 263)	1	---- ---	---- ---	---- ---	2411 174	2411 183
	(code 265)	1	---- ---	---- ---	---- ---	2411 175	2411 184

★ Indicates use as required.
⊟ Indicates parts not listed in any previous parts book.
May 1, 1962 Supersedes Nov. 30, 1961.

Printed in U.S.A.
Prices and specifications subject to change without notice.
Right and left part numbers are on same line, first number is right, second number is left.
* Indicates change or addition.

MyMopar.com

CODE	REMARKS	PER CAR	SED.	SP. 4 D.	SUB.	SP. CL. CP.	CV. CP.
23-109-4	COVER, Rear Seat Back						
	P1-L, P2-L, (Sub. 2nd. Seat)						
	(codes 101, 201)	1	2246 665	---- ---	⊟2414 868		
	(codes 103, 203)	1	2246 666	---- ---	⊟2414 869		
	(codes 104, 204)	1	2246 667	---- ---	2274 316		
	(code 211)	1	2271 916				
	(code 214)	1	2271 917				
	(code 294)	1	2293 648				
	P1-M, P2-M, (Sub. 2nd. Seat)						
	(codes 111, 131)	1	2246 942	---- ---	⊟2414 885	2246 942	
	(codes 112, 132)	1	2246 943	---- ---	⊟2414 886	2246 943	
	(codes 113, 133)	1	2246 944	---- ---	2274 177	2246 944	
	(codes 114, 134)	1	2246 945	---- ---	2274 178	2246 945	
	(code 115)	1	2429 217	---- ---	---- ---	2429 217	
	(code 231)	1	2271 916				
	(code 234)	1	2271 917				
	(code 294)	1	2293 648				
	P1-M, P2-M, (Sub. 3rd. Seat)						
	(code 131)	1	---- ---	---- ---	2274 203		
	(code 132)	1	---- ---	---- ---	2274 204		
	(code 133)	1	---- ---	---- ---	2274 205		
	(code 134)	1	---- ---	---- ---	2274 206		
	P1-H, P2-H, (Sub. 2nd. Seat)						
	(code 121)	1	2272 941	2272 941	2274 230	2272 941	
	(code 122)	1	2272 942	2272 942	2274 231	2272 942	
	(code 123)	1	2272 943	2272 943	2274 232	2272 943	
	(code 124)	1	2272 944	2272 944	2274 233	2272 944	
	(code 125)	1	2272 945	2272 945	2274 234	2272 945	
	(code 241)	1	2271 916				
	(code 244)	1	2271 917				
	(code 245)	1	2293 757	2293 757	---- ---	2293 757	2293 772
	(code 251)	1	2293 914	2293 914	---- ---	2293 914	2293 932
	(code 253)	1	2293 915	2293 915	---- ---	2293 915	2293 933
	(code 254)	1	---- ---	---- ---	---- ---	---- ---	2293 934
	P1-H, P2-H, (Sub. 3rd. Seat)						
	(code 121)	1	---- ---	---- ---	2274 260		
	(code 122)	1	---- ---	---- ---	2274 261		
	(code 123)	1	---- ---	---- ---	2274 262		
	(code 124)	1	---- ---	---- ---	2274 263		
	(code 125)	1	---- ---	---- ---	2274 264		
	P2-P						
	(code 261)	1	---- ---	---- ---	---- ---	2411 170	2411 179
	(code 263)	1	---- ---	---- ---	---- ---	2411 171	2411 180
	(code 265)	1	---- ---	---- ---	---- ---	2411 172	2411 181
23-109-5	COVER, Rear Seat Back Rear Panel						
	P1, P2, (Sub. 2nd. Seat)						
	(codes 121, 131, 201) (blue)	1	---- ---	---- ---	2272 394		
	(codes 122, 132) (green)	1	---- ---	---- ---	2272 395		
	(codes 123, 133, 203) (cocoa)	1	---- ---	---- ---	2272 396		
	(codes 124, 125, 134, 204) (gray)	1	---- ---	---- ---	2272 397		
	P1, P2, (Sub. 3rd. Seat)						
	(codes 121, 131) (blue)	1	---- ---	---- ---	2272 398		
	(codes 122, 132) (green)	1	---- ---	---- ---	2272 399		
	(codes 123, 133) (cordovan)	1	---- ---	---- ---	2272 400		
	(codes 124, 125, 134) (gray)	1	---- ---	---- ---	2272 401		

★ Indicates use as required.
⊟ Indicates parts not listed in any previous parts book.
Right and left part numbers are on same line, first number is right, second number is left.
* Indicates change or addition.

Printed in U.S.A.
Prices and specifications subject to change without notice.
March 8, 1963 Supersedes May 1, 1962.

MyMopar.com

CODE	REMARKS	PER CAR	SED.	SP. 4 D.	SUB.	SP. CL. CP.	CV. CP.
23-109-5	COVER, Rear Seat Back Rear Panel - Cont'd						
	P1-H, P2-H, (Sub. 2nd. Seat)						
	(code 121) (blue)	1	---- ---	---- ---	2272 394		
	(code 122) (green)	1	---- ---	---- ---	2272 395		
	(code 123) (cordovan)	1	---- ---	---- ---	2272 396		
	(code 124) (gray)	1	---- ---	---- ---	2272 397		
	(code 125) (gray)	1	---- ---	---- ---	2272 397		
	P1, P2 (Sub. 3rd. Seat) (back support panel)						
	(codes 121, 131) (blue)	1	---- ---	---- ---	2272 402		
	(codes 122, 132) (green)	1	---- ---	---- ---	2272 403		
	(codes 123, 133) (cordovan)	1	---- ---	---- ---	2272 404		
	(codes 124, 125, 134) (gray)	1	---- ---	---- ---	2272 405		
	(codes 261, 263, 265)	1	---- ---	---- ---	---- ---	---- ---	2249 775
23-109-35	CUSHION, Rear Seat						
	P1-L, P2-L, (Sub. 2nd. Seat)						
	(codes 101, 201)	1	2246 662	---- ---	2274 311		
	(w/heavy duty spring)	1	2246 695				
	(w/heavy duty spring and airfoam pad)	1	2293 798				
	(codes 103, 203)	1	2246 663	---- ---	2274 312		
	(w/heavy duty spring)	1	2246 696				
	(w/heavy duty spring and airfoam pad)	1	2293 799				
	(codes 104, 204)	1	2246 664	---- ---	2274 313		
	(w/heavy duty spring)	1	2246 697				
	(w/heavy duty spring and airfoam pad)	1	2293 800	---- ---	---- ---	2293 800	
	P1-M, P2-M, (Sub. 2nd. Seat)						
	(codes 111, 131)	1	2246 934	---- ---	*2414 881	2246 934	
	(w/heavy duty spring)	1	*2246 938	---- ---	---- ---	*2246 938	
	(w/heavy duty spring and airfoam pad)	1	2293 785	---- ---	---- ---	2293 785	
	(codes 112, 132)	1	2246 935	---- ---	*2414 882	2246 935	
	(w/heavy duty spring)	1	2246 939	---- ---	---- ---	*2246 939	
	(w/heavy duty spring and airfoam pad)	1	2293 786	---- ---	---- ---	2293 786	
	(codes 113, 133)	1	2246 936	---- ---	*2414 883	2246 936	
	(w/heavy duty spring)	1	2246 940	---- ---	---- ---	*2246 940	
	(w/heavy duty spring and airfoam pad)	1	2293 787	---- ---	---- ---	2293 787	
	(codes 114, 134)	1	2246 937	---- ---	*2414 884	2246 937	
	(w/heavy duty spring)	1	2246 941	---- ---	---- ---	*2246 941	
	(w/heavy duty spring and airfoam pad)	1	2293 788	---- ---	---- ---	2293 788	
	(code 115)	1	*2429 214	---- ---	---- ---	*2429 214	
	(w/heavy duty spring and airfoam pad)	1	*2429 216	---- ---	---- ---	*2429 216	
	P1-L, P2-L, P1-M, P2-M, P1-H, P2-H						
	(codes 211, 231, 241)	1	2271 912				
	(codes 214, 234, 244)	1	2271 913				
	(code 241) (w/airfoam pad)	1	2271 914				
	(code 244) (w/airfoam pad)	1	2271 915				
	(code 294)	1	2293 645				
	(w/heavy duty spring)	1	2293 646				
	(w/heavy duty spring and airfoam pad)	1	2293 647				

★ Indicates use as required.
⊟ Indicates parts not listed in any previous parts book.
May 1, 1962 Supersedes Nov. 30, 1961.

Printed in U.S.A.
Prices and specifications subject to change without notice.
Right and left part numbers are on same line, first number is right, second number is left.
* Indicates change or addition.

MyMopar.com

CODE	REMARKS	PER CAR	SED.	SP. 4 D.	SUB.	SP. CL. CP.	CV. CP.
23-109-35	CUSHION, Rear Seat - Cont'd						
	P1-M, P2-M, (Sub. 3rd. Seat)						
	(code 131)	1	---- ---	---- ---	2274 195		
	(code 132)	1	---- ---	---- ---	2274 196		
	(code 133)	1	---- ---	---- ---	2274 197		
	(code 134)	1	---- ---	---- ---	2274 198		
	P1-H, P2-H, (Sub. 2nd. Seat)						
	(code 121)	1	2272 926	2272 926	2414 907	2272 926	
	(w/airfoam pad)	1	2272 931	2272 931	---- ---	2272 931	
	(code 122)	1	2272 927	2272 927	2414 908	2272 927	
	(w/airfoam pad)	1	2272 932	2272 932	---- ---	2272 932	
	(code 123)	1	2272 928	2272 928	2414 909	2272 928	
	(w/airfoam pad)	1	2272 933	2272 933	---- ---	2272 933	
	(code 124)	1	2272 929	2272 929	2414 910	2272 929	
	(w/airfoam pad)	1	2272 934	2272 934	---- ---	2272 934	
	(code 125)	1	2272 930	2272 930	2414 911	2272 930	
	(w/airfoam pad)	1	2272 935	2272 935	---- ---	2272 935	
	(code 245)	1	2293 755	2293 755	---- ---	2293 755	2293 768
	(w/airfoam pad)	1	2293 756	2293 756	---- ---	2293 756	2293 769
	(code 251)	1	2293 910	2293 910	---- ---	2293 910	2293 926
	(w/airfoam pad)	1	2293 912	2293 912	---- ---	2293 912	2293 929
	(code 253)	1	2293 911	2293 911	---- ---	2293 911	2293 927
	(w/airfoam pad)	1	2293 913	2293 913	---- ---	2293 913	2293 930
	(code 254)	1	---- ---	---- ---	---- ---	---- ---	2293 928
	(w/airfoam pad)	1	---- ---	---- ---	---- ---	---- ---	2293 931
	P1-H, P2-H, (Sub. 3rd. Seat)						
	(code 121)	1	---- ---	---- ---	2274 250		
	(code 122)	1	---- ---	---- ---	2274 251		
	(code 123)	1	---- ---	---- ---	2274 252		
	(code 124)	1	---- ---	---- ---	2274 253		
	(code 125)	1	---- ---	---- ---	2274 254		
	P2-P						
	(code 261)	1	---- ---	---- ---	---- ---	2411 155	2411 164
	(code 263)	1	---- ---	---- ---	---- ---	2411 156	2411 165
	(code 265)	1	---- ---	---- ---	---- ---	2411 157	2411 166
23-109-36	COVER, Rear Seat Cushion						
	P1-L, P2-L, (Sub. 2nd. Seat)						
	(codes 101, 201)	1	2246 659	---- ---	*2274 308		
	(codes 103, 203)	1	2246 660	---- ---	*2274 309		
	(codes 104, 204)	1	2246 661	---- ---	*2274 310		
	(code 211)	1	2271 910				
	(code 294)	1	2293 644				
	P1-M, P2-M, (Sub. 2nd. Seat)						
	(codes 111, 131)	1	2246 930	---- ---	2274 167	2246 930	
	(codes 112, 132)	1	2246 931	---- ---	2274 168	2246 931	
	(codes 113, 133)	1	2246 932	---- ---	2274 169	2246 932	
	(codes 114, 134)	1	2246 933	---- ---	2274 170	2246 933	
	(code 115)	1	2429 213	---- ---	---- ---	2429 213	
	(code 231)	1	2271 910				
	(code 234)	1	2271 911				
	(code 294)	1	2293 644				
	P1-M, P2-M, (Sub. 3rd. Seat)						
	(code 131)	1	---- ---	---- ---	2274 191		
	(code 132)	1	---- ---	---- ---	2274 192		
	(code 133)	1	---- ---	---- ---	2274 193		
	(code 134)	1	---- ---	---- ---	2274 194		

★ Indicates use as required.
⊟ Indicates parts not listed in any previous parts book.
Right and left part numbers are on same line, first number is right, second number is left.
* Indicates change or addition.

Printed in U.S.A.
Prices and specifications subject to change without notice.
March 8, 1963 Supersedes May 1, 1962.

MyMopar.com

CODE	REMARKS	PER CAR	SED.	SP. 4 D.	SUB.	SP. CL. CP.	CV. CP.
23-109-36	COVER, Rear Seat Cushion-Cont'd						
	P1-H, P2-H, (Sub. 2nd. Seat)						
	(code 121)	1	2272 921	2272 921	2274 215	2272 921	
	(code 122)	1	2272 922	2272 922	2274 216	2272 922	
	(code 123)	1	2272 923	2272 923	2274 217	2272 923	
	(code 124)	1	2272 924	2272 924	2274 218	2272 924	
	(code 125)	1	2272 925	2272 925	2274 219	2272 925	
	(code 241)	1	2271 910				
	(code 244)	1	2271 911				
	(code 245)	1	2293 753	2293 753	---- ---	2293 753	2293 766
	(code 251)	1	2293 906	2293 906	---- ---	2293 906	2293 920
	(code 253)	1	2293 907	2293 907	---- ---	2293 907	2293 921
	(code 254)	1	---- ---	---- ---	---- ---	---- ---	2293 922
	P1-H, P2-H, (Sub. 3rd. Seat)						
	(code 121)	1	---- ---	---- ---	2274 245		
	(code 122)	1	---- ---	---- ---	2274 246		
	(code 123)	1	---- ---	---- ---	2274 247		
	(code 124)	1	---- ---	---- ---	2274 248		
	(code 125)	1	---- ---	---- ---	2274 249		
	P2-P						
	(code 261)	1	---- ---	---- ---	---- ---	2411 152	2411 161
	(code 263)	1	---- ---	---- ---	---- ---	2411 153	2411 162
	(code 265)	1	---- ---	---- ---	---- ---	2411 154	2411 163
23-109-38	RETAINER, Rear Seat Cushion						
	P1, P2	2	1810 037	1810 037	1810 037	1810 037	1810 037
	RETAINER, Rear Floor Pan, 3rd. Seat, Front						
	P1, P2	2	---- ---	---- ---	⊟2251 674		
	Rear	2	---- ---	---- ---	*2422 981		
	CATCH, 3rd. Seat Cushion						
	P1, P2	2	---- ---	---- ---	*2270 834		
23-111-37	STRIP, Folding Top Bow Tacking						
	P2-H (No. 1 and No. 2)	1	---- ---	---- ---	---- ---	---- ---	1950 509
	(No. 3)	1	---- ---	---- ---	---- ---	---- ---	2251 165
23-112-12	BOOT, Folding Top Dust						
	P2-H						
	(code 245) (red)	1	---- ---	---- ---	---- ---	---- ---	2293 707
	(code 251) (blue)	1	---- ---	---- ---	---- ---	---- ---	2293 703
	(code 253) (cocoa)	1	---- ---	---- ---	---- ---	---- ---	2293 705
	(code 254) (gray)	1	---- ---	---- ---	---- ---	---- ---	2293 706
	P2-P						
	(code 261) (blue)	1	---- ---	---- ---	---- ---	---- ---	2411 185
	(code 263) (cocoa)	1	---- ---	---- ---	---- ---	---- ---	2411 186
	(code 265) (black)	1	---- ---	---- ---	---- ---	---- ---	*2411 187
23-112-18	RETAINER, Channel Rear Seat Back Dust Boot						
	P2	1	---- ---	---- ---	---- ---	---- ---	*2270 167
23-112-19	INSERT, Rear Seat Back Dust Boot Cover						
	P2 (vinyl)	1	---- ---	---- ---	---- ---	---- ---	*2160 328
23-112-21	PLATE and FASTENER, Front Seat Center Cushion Flap						
	P2-H	★	---- ---	---- ---	---- ---	---- ---	⊟2193 035
23-112-45	CURTAIN, Folding Top						
	P2 (black)	1	---- ---	---- ---	---- ---	---- ---	*2293 720
	(white)	1	---- ---	---- ---	---- ---	---- ---	2293 721
23-112-46	ZIPPER, Folding Top Curtain						
	P2 (black)	1	---- ---	---- ---	---- ---	---- ---	*2273 435

★ Indicates use as required.
⊟ Indicates parts not listed in any previous parts book.
March 8, 1963 Supersedes May 1, 1962.

Printed in U.S.A.
Prices and specifications subject to change without notice.
Right and left part numbers are on same line, first number is right, second number is left.
* Indicates change or addition.

MyMopar.com

CODE	REMARKS	PER CAR	SED.	SP. 4 D.	SUB.	SP. CL. CP.	CV. CP.
23-112-70	RETAINER, Folding Top Belt Bar						
	P2 (center)	1	---- ---	---- ---	---- ---	---- ---	*2189 748
	(side)	1	---- ---	---- ---	---- ---	---- ---	2189 852-3
	Top Trim, Inner (5/8" x 8")	2	---- ---	---- ---	---- ---	---- ---	2252 610
23-112-75	END, Folding Top Wire on Binding						
	P2-H	1	---- ---	---- ---	---- ---	---- ---	1158 976-7
23-112-88	CABLE, Folding Top Rear Bow Tension						
	P2-H	2	---- ---	---- ---	---- ---	---- ---	2166 660
23-112-108	TOP DECK and SIDE QUARTER						
	P2-H (black)	1	---- ---	---- ---	---- ---	---- ---	2293 722
	(white)	1	---- ---	---- ---	---- ---	---- ---	2293 723
23-112-112	PAD, Folding Top Side Quarter Stay						
	P2-H (black)	1	---- ---	---- ---	---- ---	---- ---	2293 724-5
23-112-153	PANEL or COVER, Folding Top Well Pocket						
	P1-H, P2-H, (panel and cover)						
	(code 245)	1	---- ---	---- ---	---- ---	---- ---	2293 700-1
	(code 251)	1	---- ---	---- ---	---- ---	---- ---	2293 692-3
	(code 253)	1	---- ---	---- ---	---- ---	---- ---	2293 696-7
	(code 254)	1	---- ---	---- ---	---- ---	---- ---	2293 698-9
	P1-H, P2-H, (cover)						
	(code 245)	1	---- ---	---- ---	---- ---	---- ---	2293 690-1
	(code 251)	1	---- ---	---- ---	---- ---	---- ---	2293 682-3
	(code 253)	1	---- ---	---- ---	---- ---	---- ---	2293 686-7
	(code 254)	1	---- ---	---- ---	---- ---	---- ---	2293 688-9
	P2-P (panel and cover)						
	(code 261)	1	---- ---	---- ---	---- ---	---- ---	2411 068-9
	(code 263)	1	---- ---	---- ---	---- ---	---- ---	2411 070-1
	(code 265)	1	---- ---	---- ---	---- ---	---- ---	2411 072-3
	P2-P (cover)						
	(code 261)	1	---- ---	---- ---	---- ---	---- ---	2411 062-3
	(code 263)	1	---- ---	---- ---	---- ---	---- ---	2411 064-5
	(code 265)	1	---- ---	---- ---	---- ---	---- ---	2411 066-7
	P1, Well Lining Panel	1	---- ---	---- ---	---- ---	---- ---	2293 713
	P1, Quarter Pocket Panel Shelf Trim	1	---- ---	---- ---	---- ---	---- ---	*2413 836-7
23-113-45	WEATHERCORD, Quarter Window Opening						
	P1, P2, (2 D.)						
	(codes 101, 111) (blue)	1	2249 692-3				
	(codes 103, 113) (cocoa)	1	2249 696-7				
	(codes 104, 114, 294) (gray)	1	2249 698-9				
	(code 112) (green)	1	2249 694-5				
	(code 115) (red)	1	2249 866-7				
	(flange cover)	★	2292 592	2292 592	---- ---	2292 592	2292 592
23-113-84	WELT, Folding Top Header						
	P2-H, P2-P (black)	1	---- ---	---- ---	---- ---	---- ---	*2432 150
23-114-2	MATERIAL, Seat Cloth Trim						
	P1-L, P2-L						
	(code 101) (blue)	★	2185 312				
	(code 103) (cocoa)	★	2185 313				
	(code 104) (gray)	★	2185 314				

★ Indicates use as required.
⊟ Indicates parts not listed in any previous parts book.
Right and left part numbers are on same line, first number is right, second number is left.
* Indicates change or addition.

Printed in U.S.A.
Prices and specifications subject to change without notice.
May 1, 1962 Supersedes Nov. 30, 1961.

MyMopar.com

CODE	REMARKS	PER CAR	SED.	SP. 4 D.	SUB.	SP. CL. CP.	CV. CP.
23-114-2	MATERIAL, Seat Cloth Trim - Cont'd						
	P1-M, P2-M						
	(codes 111, 131) (blue)	★	2185 308	---- ---	2185 452	2185 308	
	(codes 112, 132) (green)	★	2185 309	---- ---	2185 453	2185 309	
	(codes 113, 133) (cocoa)	★	2185 310	---- ---	2185 454	2185 310	
	(codes 114, 134) (gray)	★	2185 311	---- ---	2185 455	2185 311	
	(code 115) (red)	★	2186 050	---- ---	---- ---	2186 050	
	P1-H, P2-H						
	(code 121) (blue)	★	2185 401	2185 401	2185 401	2185 401	
	(code 122) (green)	★	2185 402	2185 402	2185 402	2185 402	
	(code 123) (cocoa)	★	2185 403	2185 403	2185 403	2185 403	
	(code 124) (black)	★	2185 404	2185 404	2185 404	2185 404	
	(code 125) (red)	★	2185 405	2185 405	2185 405	2185 405	
23-114-10	BINDING (5/8" wire on)						
	P2-H, P2-P (black)	★	---- ---	---- ---	---- ---	---- ---	2171 884
	(white)	★	---- ---	---- ---	---- ---	---- ---	2177 529
23-114-15	MATERIAL, Leather (Imitation)						
	P1, P2						
	(codes 101, 111, 121, 131, 201, 211, 231, 241, 251)						
	(31-DC-63) (56")(1501-1 blue)	★	2185 277	---- ---	2185 277		
	(28A-AM-22)(50") (codes 111, 131) (1502-1 blue)	★	2185 158	---- ---	2185 158	2185 158	
	(codes 211, 231, 241) (1500 blue)	★	2185 152				
	(28-AM-68) (50")(1547-1 blue)	★	2185 588	2185 588	---- ---	2185 588	2185 588
	(28-AM-22) (50")(1501-1 blue)	★	2185 141	2185 141	2185 141	2185 141	2185 141
	(21-CM-22) (codes 111, 131, 231) (54")(1502-1 blue)	★	2185 610				
	(21-CZ-22) (58")(1501-1 blue)	★	2185 144	---- ---	2185 144		
	(19A-C-22) (54")(1220-1 black)	★	1874 975				
	(19B-C-22) (54")(1501-1 blue)	★	2185 147				
	(19-C-22) (54") (codes 111, 131) (1502-1 blue)	★	2185 164	---- ---	2185 164	2185 164	
	(codes 101, 121, 211, 221, 231, 241, 251) (1501-1 blue)	★	2185 147	2185 147	2185 147	2185 147	2185 147
	(19-DJ-22) (54")(1501-1 blue)	★	2185 578	2185 578	2185 578	2185 578	2185 578
	(18-T-16) (54")(1500 blue)	★	2185 331				
	P1, P2						
	(codes 103, 113, 123, 133, 203, 253)						
	(31-DC-63) (56")(1504-1 cocoa)	★	2185 278	---- ---	2185 278		
	(28A-AM-22)(50") (1505-1 cordovan)	★	2185 160	---- ---	2185 160	2185 160	
	(28-AM-68) (50")(1548-1 cocoa)	★	2185 589	2185 589	---- ---	2185 589	2185 589
	(28-AM-22) (50")(1504-1 cocoa)	★	2185 142	2185 142	2185 142	2185 142	2185 142
	(21-CM-22) (54") (1505-1 cordovan)	★	2185 612	---- ---	---- ---	2185 612	
	(21-CZ-22) (58")(1504-1 cocoa)	★	2185 145	---- ---	2185 145		
	(19A-C-22) (54")(1220-1 black)	★	1874 975	---- ---	---- ---	---- ---	1874 975
	(19B-C-22) (54")(1504-1 cocoa)	★	2185 148				
	(19-C-22) (54") (codes 113, 133) (1505-1 cordovan)	★	2185 166	---- ---	2185 166	2185 166	
	(19-C-22) (54") (codes 103, 123, 223, 253) (1504-1 cocoa)	★	2185 148	2185 148	2185 148	2185 148	2185 148
	(19-DJ-22) (54")(1504-1 cocoa)	★	2185 544	2185 544	2185 544	2185 544	2185 544

★ Indicates use as required.
⊟ Indicates parts not listed in any previous parts book.
March 8, 1963 Supersedes May 1, 1962.

Printed in U.S.A.
Prices and specifications subject to change without notice.
Right and left part numbers are on same line, first number is right, second number is left.
* Indicates change or addition.

MyMopar.com

CODE	REMARKS	PER CAR	SED.	SP. 4 D.	SUB.	SP. CL. CP.	CV. CP.
23-114-15	MATERIAL, Leather (Imitation) - Cont'd						
	P1, P2 (codes 104, 114, 124, 134, 204, 214, 234, 244, 254)						
	(37-CX-22) (50")(902 gray)	★	2185 119				
	(31-DC-63) (56")(1508-1 gray)	★	2185 279	---- ---	2185 279		
	(28A-AM-22)(50") (codes 114, 134) (1220-1 black)	★	1875 018	---- ---	1875 018	1875 018	
	(28-AM-68) (50")(1546 black)	★	2185 587	2185 587	---- ---	2185 587	2185 587
	(28A-AM-22)(50") (codes 214, 234, 244) (1511 gray)	★	2185 154				
	(28-AM-22) (50")(1508-1 gray)	★	2185 143	2185 143	2185 143	2185 143	2185 143
	(21-CZ-22) (58")(1508-1 gray)	★	2185 146	---- ---	2185 146		
	(19A-C-22) (54")(1220-1 black)	★	1874 975	---- ---	---- ---	---- ---	1874 975
	(19B-C-22) (54")(1220-1 black)	★	1874 975				
	(19-C-22) (54") (codes 114, 134) (1220-1 black)	★	1874 975	---- ---	1874 975	1874 975	
	(19-C-22) (54") (codes 104, 124, 214, 234, 244, 254) (1508-1 gray)	★	2185 149	2185 149	2185 149	2185 149	2185 149
	(19-DJ-22) (54")(1508-1 gray)	★	2185 598	2185 598	2185 598	2185 598	2185 598
	P1, P2 (codes 112, 122, 132)						
	(28A-AM-22)(50")(1507-1 green)	★	2185 159	---- ---	2185 159	2185 159	
	(28-AM-22) (50")(1506-1 green)	★	2185 163	2185 163	2185 163	2185 163	
	(21-CM-22) (54")(1507-1 green)	★	2185 611	---- ---	---- ---	2185 611	
	(19A-C-22) (54")(1506-1 green)	★	2185 167				
	(19-C-22) (54") (codes 112, 132) (1507-1 green)	★	2185 165	---- ---	2185 165	2185 165	
	(19-C-22) (54") (code 122) (1506-1 green)	★	2185 167	2185 167	2185 167	2185 167	
	(19-DJ-22) (54")(1506-1 green)	★	2185 579	2185 579	2185 579	2185 579	
	P1, P2 (codes 115, 125, 245)						
	(28A-AM-22)(50")(1509 red)	★	*2185 150				
	(28A-AM-68)(50")(1509 red)	★	2185 522	2185 522	---- ---	2185 522	2185 522
	(28-AM-22) (50")(1509 red)	★	2185 150	2185 150	2185 150	2185 150	2185 150
	(19A-C-22) (54")(1220-1 black)	★	1874 975				
	(19B-C-22) (54")(1509 red)	★	2185 151				
	(19-C-22) (54")(1509 red)	★	2185 151	2185 151	2185 151	2185 151	2185 151
	(19-DJ-22) (54")(1509 red)	★	2185 545	2185 545	2185 545	2185 545	2185 545
	P1, P2 (code 294)						
	(37-CX-22) (50")(902 gray)	★	2185 119				
	(19A-C-22) (54")(1508-1 gray)	★	2185 149				
	(19-C-22) (54")(902 gray)	★	2185 001				
	(19-DJ-22) (54")(902 gray)	★	2185 599				
	P2-P (code 261)						
	(28A-AM-22)(50")(1501-1 blue)	★	---- ---	---- ---	---- ---	2185 141	2185 141
	(28-AM-22) (50")(1502-1 blue)	★	---- ---	---- ---	---- ---	2185 158	2185 158
	(19A-C-22) (54")(1220-1 black)	★	---- ---	---- ---	---- ---	1874 975	1874 975
	(19A-DJ-22) (54")(1501-1 blue)	★	---- ---	---- ---	---- ---	2185 578	2185 578
	(19B-C-22) (54")(1501-1 blue)	★	---- ---	---- ---	---- ---	2185 147	2185 147
	(19-C-22) (54")(1502-1 blue)	★	---- ---	---- ---	---- ---	2185 164	2185 164
	P2-P (code 263)						
	(28A-AM-22)(50")(1504-1 cocoa)	★	---- ---	---- ---	---- ---	2185 142	2185 142
	(28-AM-22) (50") (1505-1 cordovan)	★	---- ---	---- ---	---- ---	2185 160	2185 160
	(19A-C-22) (54")(1220-1 black)	★	---- ---	---- ---	---- ---	1874 975	1874 975

★ Indicates use as required.
⊟ Indicates parts not listed in any previous parts book.
Right and left part numbers are on same line, first number is right, second number is left.
* Indicates change or addition.

Printed in U.S.A.
Prices and specifications subject to change without notice.
March 8, 1963 Supersedes May 1, 1962.

MyMopar.com

CODE	REMARKS	PER CAR	SED.	SP. 4 D.	SUB.	SP. CL. CP.	CV. CP.
23-114-15	MATERIAL, Leather (Imitation) - Cont'd						
	P2-P (code 263)						
	(19A-DJ-22) (54")(1504-1 cocoa)	★	---- ---	---- ---	---- ---	2185 544	2185 544
	(19B-C-22) (54")(1504-1 cocoa)	★	---- ---	---- ---	---- ---	2185 148	2185 148
	(19-C-22) (54") (1505-1 cordovan)	★	---- ---	---- ---	---- ---	2185 166	2185 166
	P2-P (code 265)						
	(28A-AM-22)(50")(1509 red)	★	---- ---	---- ---	---- ---	2185 150	2185 150
	(28-AM-22) (50")(415 black)	★	---- ---	---- ---	---- ---	1831 003	1831 003
	(19A-C-22) (54")(1220-1 black)	★	---- ---	---- ---	---- ---	1874 975	1874 975
	(19A-DJ-22) (54")(1509 red)	★	---- ---	---- ---	---- ---	2185 545	2185 545
	(19B-C-22) (54")(1509 red)	★	---- ---	---- ---	---- ---	2185 151	2185 151
	(19-C-22) (54")(415 black)	★	---- ---	---- ---	---- ---	1874 974	1874 974
	(19-DJ-22) (54")(1509 red)	★	---- ---	---- ---	---- ---	2185 545	2185 545
23-115-4	NUT, Front Seat Cushion to Back Mounting						
	P1, P2	★	1918 296	1918 296	1918 296	1918 296	1918 296
	PUSHNUT, Front Seat Cushion to Back Mounting						
	P1, P2	2	*2160 648	*2160 648	*2160 648	*2160 648	*2160 648
	NUT (3rd. seat back support stud retainer)	2	---- ---	---- ---	*2092 246		
23-115-5	WASHER, Front Seat Center Arm Rest Trim						
	P1, P2	★	1918 299	1918 299	1918 299	1918 299	1918 299
23-115-6	SCREW, Front Seat Cushion to Back Mounting						
	P1, P2	2	1918 587	1918 587	1918 587	1918 587	1918 587
23-115-10	SCREW, Front Seat Center Arm Rest to Cushion Mounting						
	P1, P2	★	2092 212	2092 212	2092 212	2092 212	2092 212

NOTES

★ Indicates use as required.
⊟ Indicates parts not listed in any previous parts book.
March 8, 1963 Supersedes May 1, 1962.

Printed in U.S.A.
Prices and specifications subject to change without notice.
Right and left part numbers are on same line, first number is right, second number is left.
* Indicates change or addition.

MyMopar.com

1962 VALIANT

INTERIOR TRIM

HOW TO USE INTERIOR TRIM ILLUSTRATIONS

The illustrations in this section are actual and each body style showing the Interior Trim is included.

The letters shown on the illustration indicate the description of the part and the part type code when referred to the legend which appears preceding the listing of the parts. The letters are consistent throughout the illustrations as "A" is always a Door Trim Panel, Code 23-92-5.

The numbers on the illustration indicate the distribution of material and type of material used. The numbers may vary with each illustration. The legend appears on the illustration.

For complete information on "How to Order" Trim Parts, see Mopar Parts Price List.

MyMopar.com

1962 VALIANT - S SERIES

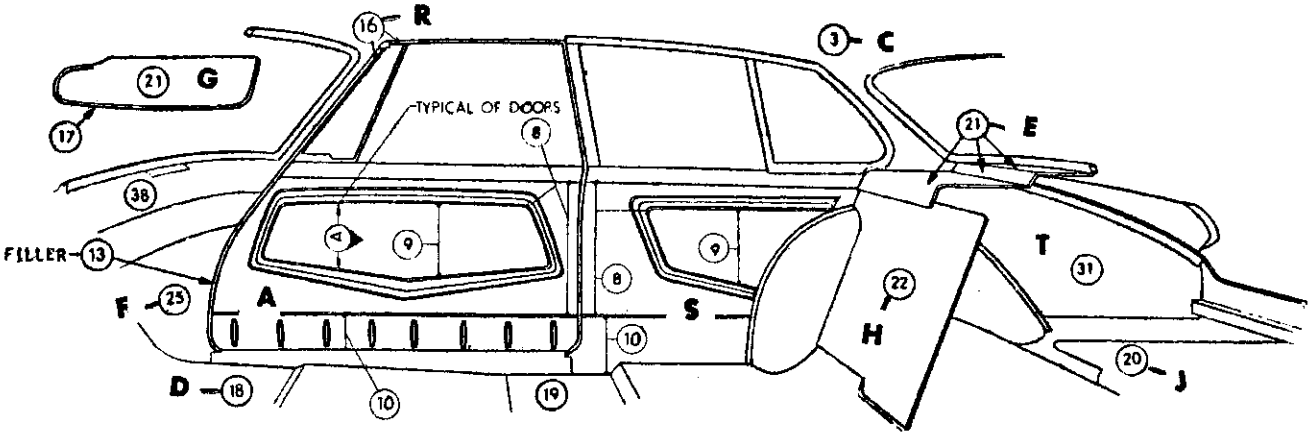

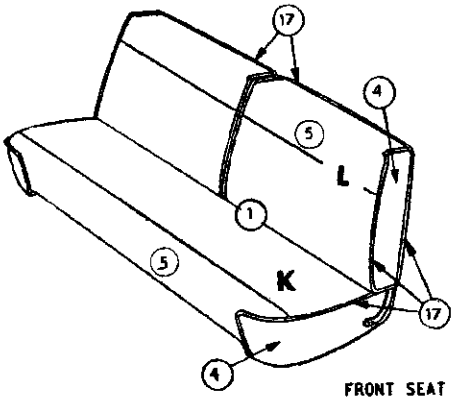

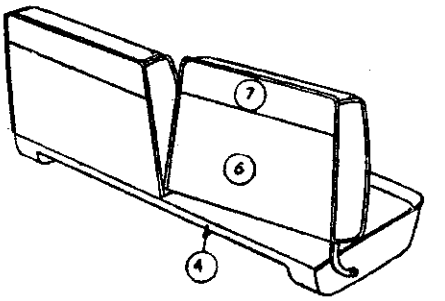

FRONT DOOR & REAR QUARTER ARM RESTS

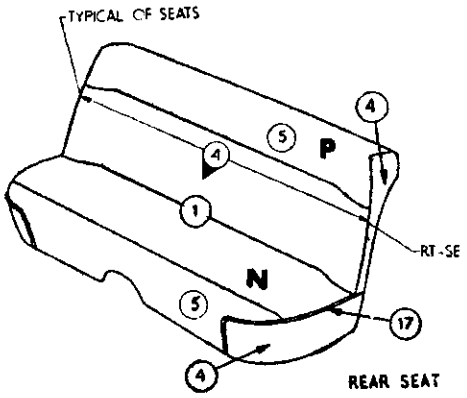

DISTRIBUTION OF MATERIAL

1	BODY CLOTH 1	
3	HEADLINING	
4	IMITATION LEATHER	32-CH-22
5	IMITATION LEATHER	32A-CH-22
6	IMITATION LEATHER	34-DA-22
7	IMITATION LEATHER	34A-DA-22
8	IMITATION LEATHER	.012-L-22
9	IMITATION LEATHER	21-BE-67
10	IMITATION LEATHER	.012A-L-22
13	IMITATION LEATHER	19-C-22
16	LACE	
17	EXTRUDED VINYL	
18	FLOOR COVERING-FRONT-RUBBER	
19	FLOOR COVERING-REAR-RUBBER	
20	FLOOR COVERING-LUGG. COMPT. PRINTED JUTE	
22	CARDBOARD	
25	HARDBOARD	
26	FELT	
30	PLASTIC	
31	PAINT	
32	METAL	
36	MYLAR	
38	MOULDED RESIN	
39	PLASTISOL	

Distribution Drawing Legend Page Appears Following Illustration Section

Codes 501, 504, 505

SVL-211

1962 VALIANT SV1-L 2 DOOR SEDAN
CLOTH & IMITATION LEATHER COMB.

MyMopar.com

1962 VALIANT - S SERIES

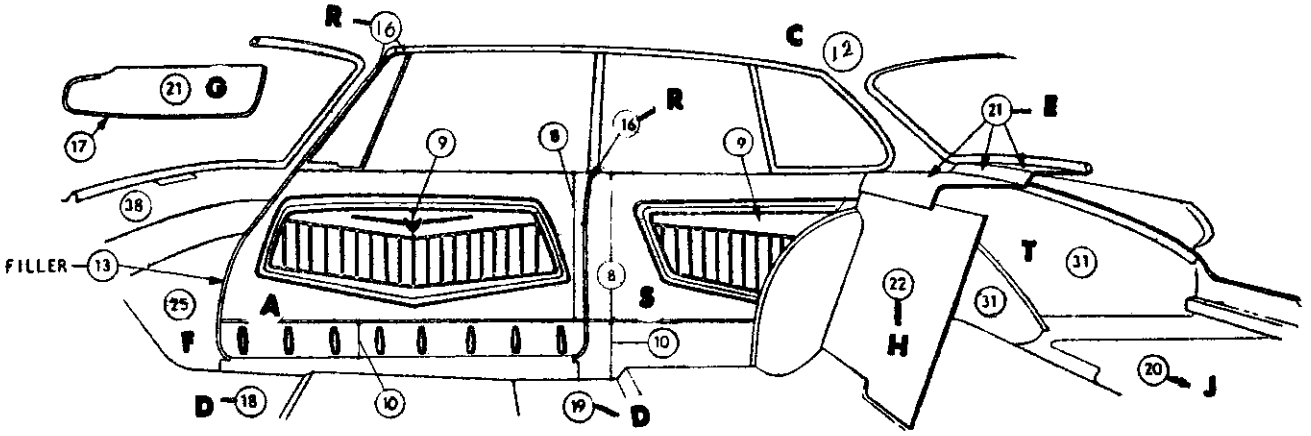

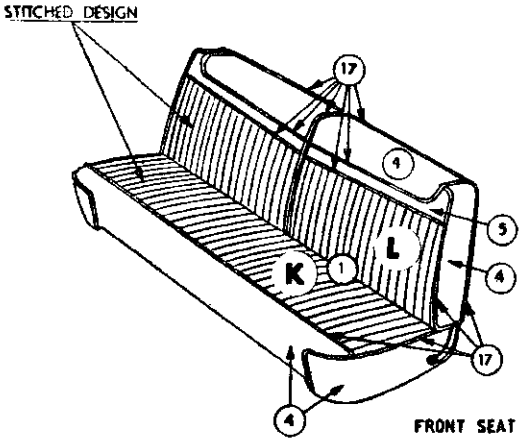

FRONT SEAT

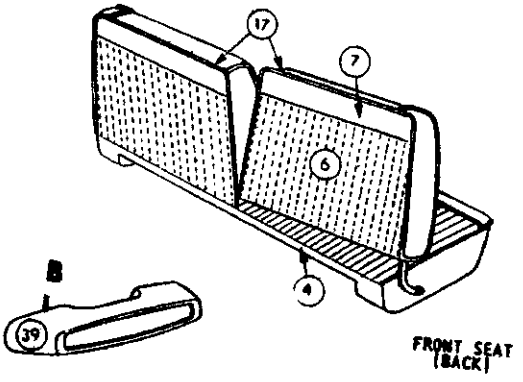

FRONT DOOR & REAR QUARTER ARM RESTS

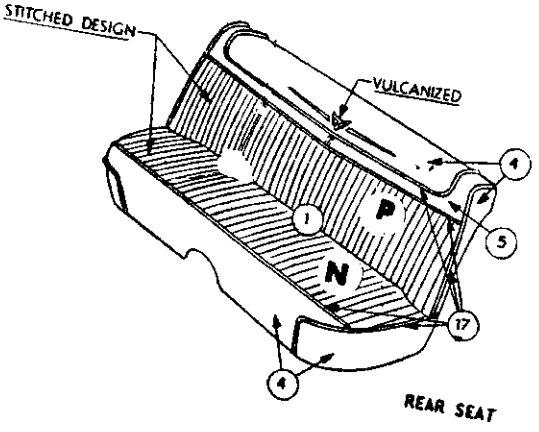

REAR SEAT

DISTRIBUTION OF MATERIAL

1	BODY CLOTH I	
4	IMITATION LEATHER	32-CH-22
5	IMITATION LEATHER	32A-CH-22
6	IMITATION LEATHER	34-DB-22
7	IMITATION LEATHER	34-DA-22
8	IMITATION LEATHER	21-CM-22
9	IMITATION LEATHER	21A-CM-22
10	IMITATION LEATHER	.012-L-22
12	IMITATION LEATHER	13.5-C-81
13	IMITATION LEATHER	19-C-22
16	LACE	
17	EXTRUDED VINYL	
18	FLOOR COVERING-FRONT-CARPET	
19	FLOOR COVERING-REAR-CARPET	
20	FLOOR COVERING-LUGG. COMPT. PRINTED JUTE	
21	EMBOSSED CARDBOARD	
22	CARDBOARD	
25	HARDBOARD	
30	PLASTIC	
31	PAINT	
32	METAL	
33	MOULDING	
36	MYLAR	
38	MOULDED RESIN	
39	PLASTISOL	

Distribution Drawing Legend Page Appears Following Illustration Section

Codes 521, 522, 525

SVH-211 **1962 VALIANT SV1-H 2 DOOR SEDAN CLOTH & IMITATION LEATHER COMB.**

MyMopar.com

1962 VALIANT - S SERIES

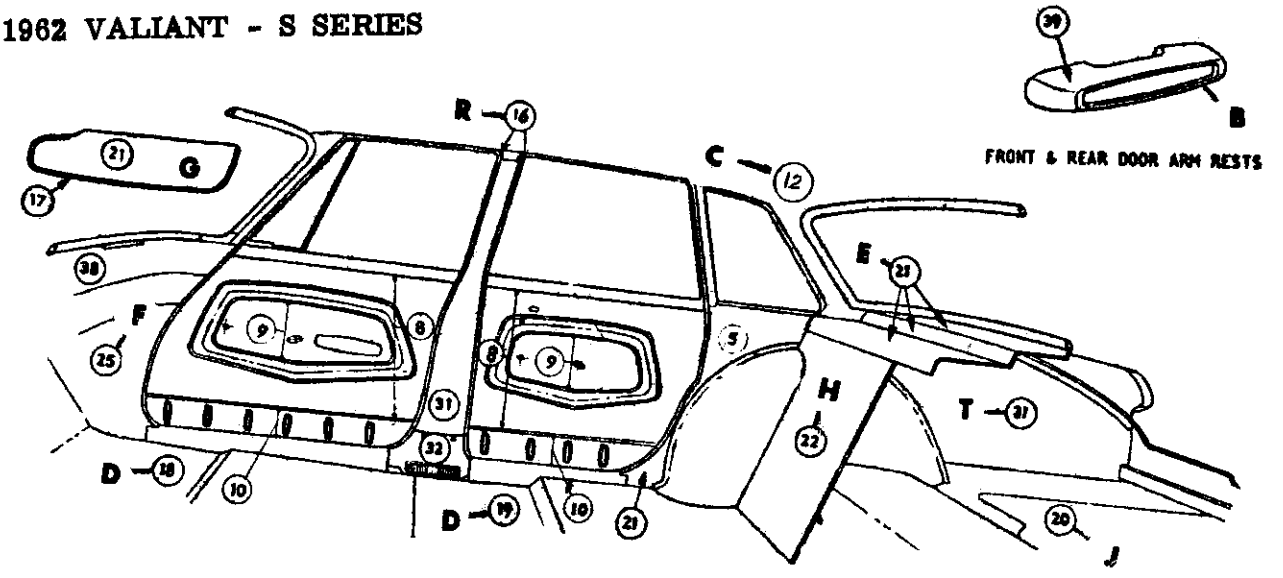

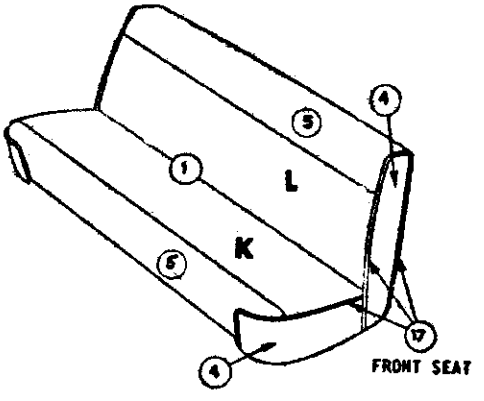

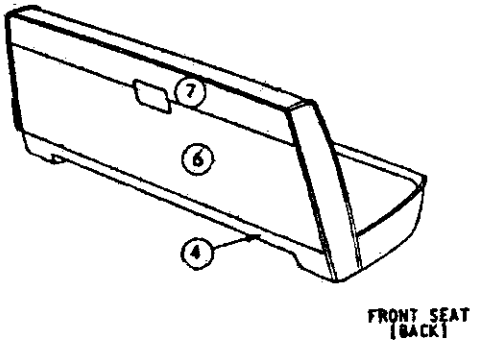

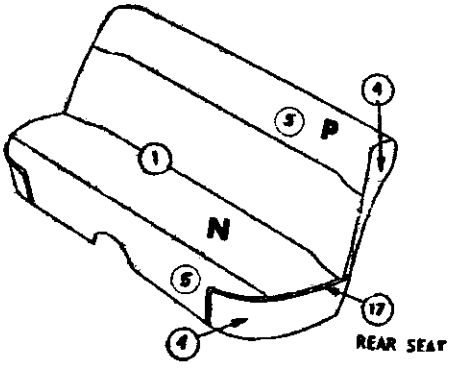

DISTRIBUTION OF MATERIAL

1	BODY CLOTH I	
4	IMITATION LEATHER	32-CH-22
5	IMITATION LEATHER	32A-CH-22
6	IMITATION LEATHER	34-DA-22
7	IMITATION LEATHER	34A-DA-22
8	IMITATION LEATHER	.012-L-22
9	IMITATION LEATHER	21-BE-67
10	IMITATION LEATHER	.012A-L-22
12	IMITATION LEATHER	12-Y-71
16	LACE	
17	EXTRUDED VINYL	
18	FLOOR COVERING-FRONT-RUBBER	
19	FLOOR COVERING-REAR-RUBBER	
20	FLOOR COVERING-LUGG. COMPT. PRINTED JUTE	
21	EMBOSSED CARDBOARD	
22	CARDBOARD	
25	HARDBOARD	
30	PLASTIC	
31	PAINT	
32	METAL	
33	MOULDING	
36	MYLAR	
38	MOULDED RESIN	
39	PLASTISOL	

Distribution Drawing Legend Page Appears Following Illustration Section

Codes 501, 504, 505

SVL-411 **1962 VALIANT SV1-L 4 DOOR SEDAN CLOTH & IMITATION LEATHER COMB.**

MyMopar.com

1962 VALIANT - S SERIES

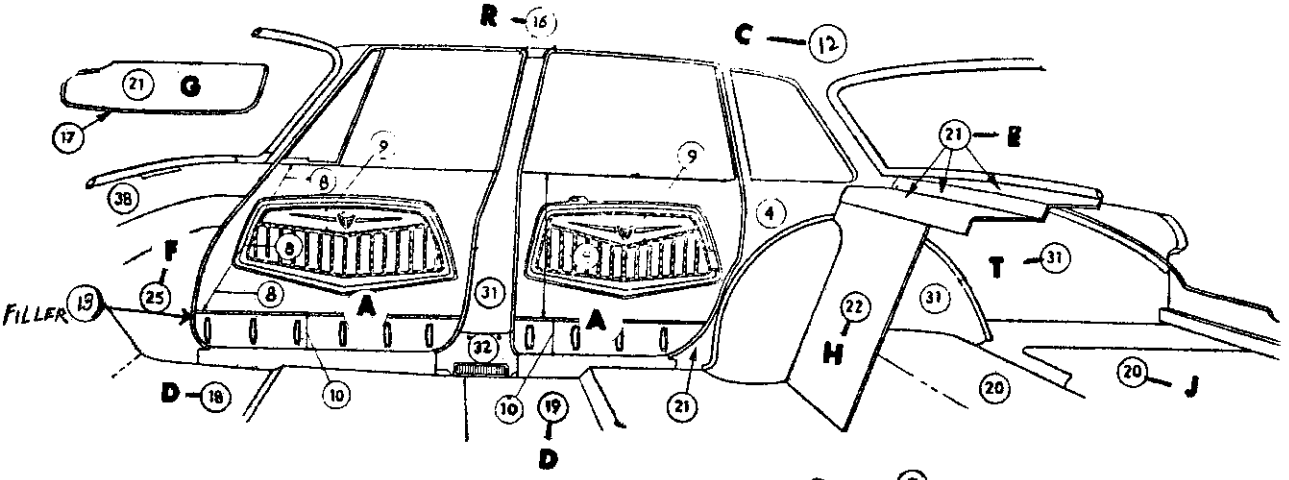

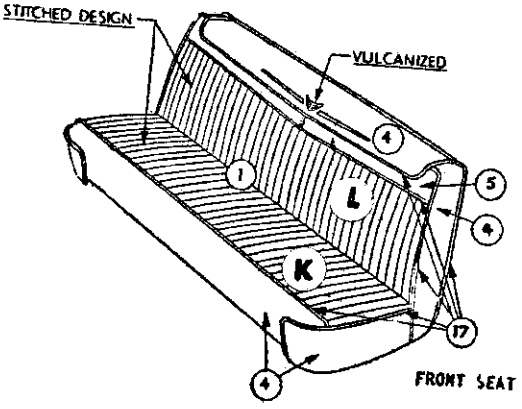

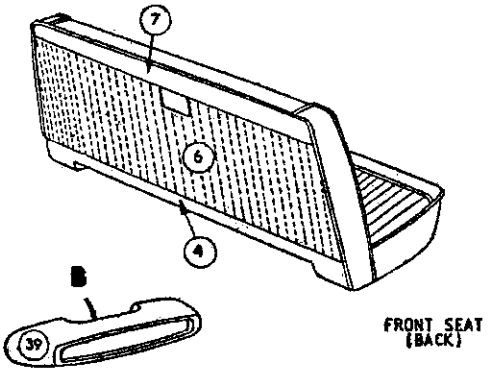

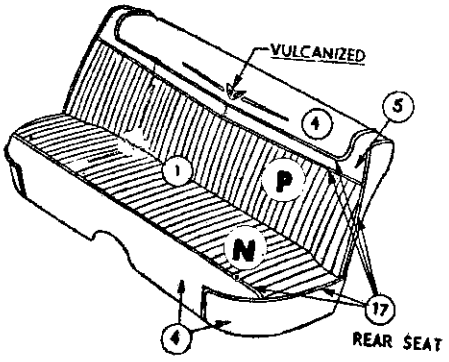

DISTRIBUTION OF MATERIAL

1	BODY CLOTH I	
3	HEADLINING	
4	IMITATION LEATHER	32-CH-22
5	IMITATION LEATHER	32A-CH-22
6	IMITATION LEATHER	34-DB-22
7	IMITATION LEATHER	34-DA-22
8	IMITATION LEATHER	21-CM-22
9	IMITATION LEATHER	21A-CM-22
10	IMITATION LEATHER	.012-L-22
12	IMITATION LEATHER	12-Y-71
13	IMITATION LEATHER	19-C-22
16	LACE	
17	EXTRUDED VINYL	
18	FLOOR COVERING-FRONT-CARPET	
19	FLOOR COVERING-REAR-CARPET	
20	FLOOR COVERING-LUGG. COMPT. PRINTED JUTE	
21	EMBOSSED CARDBOARD	
22	CARDBOARD	
25	HARDBOARD	
30	PLASTIC	
31	PAINT	
32	METAL	
36	MYLAR	
38	MOULDED RESIN	
39	PLASTISOL	

Distribution Drawing Legend Page Appears Following Illustration Section

Codes 521, 522, 525

SVH-411

1962 VALIANT SV1-H 4 DOOR SEDAN
CLOTH & IMITATION LEATHER COMB.

MyMopar.com

1962 VALIANT - S SERIES

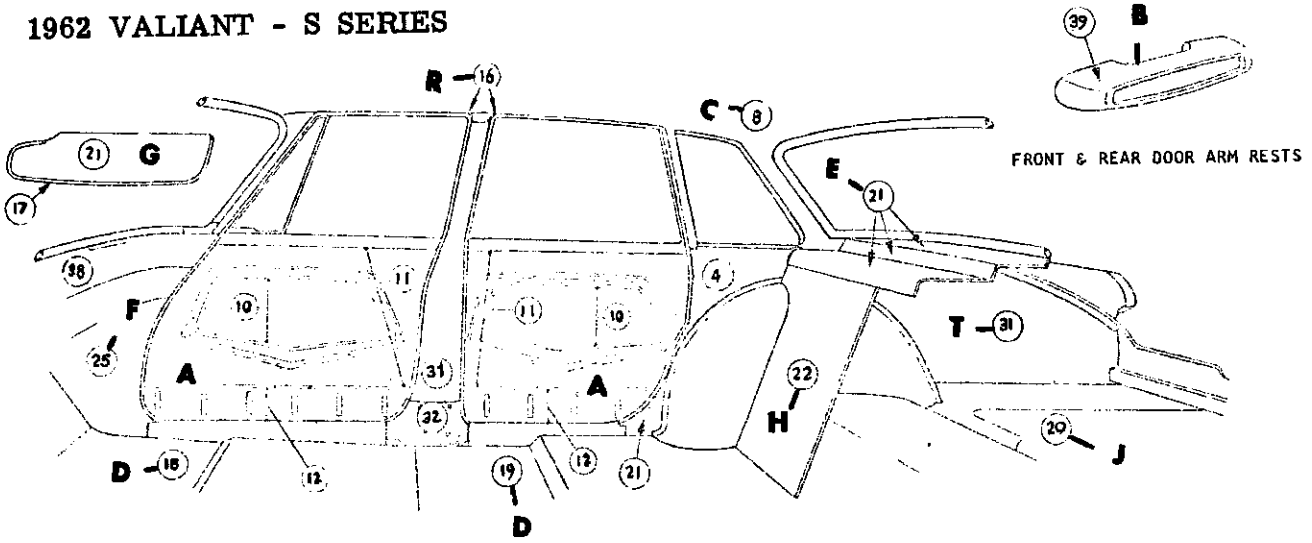

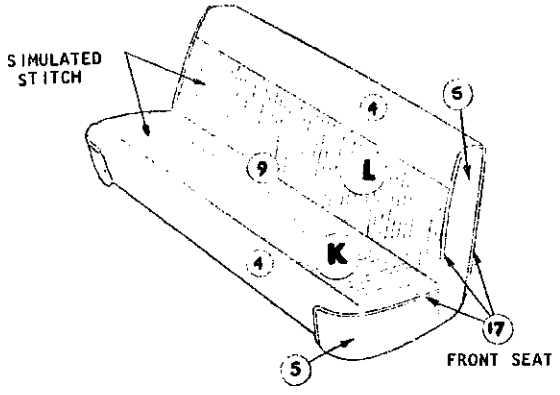

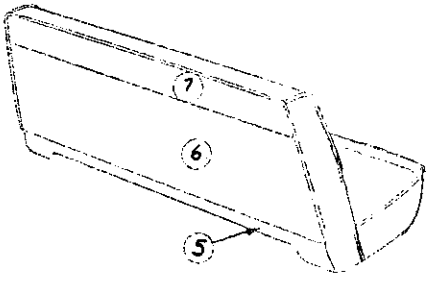

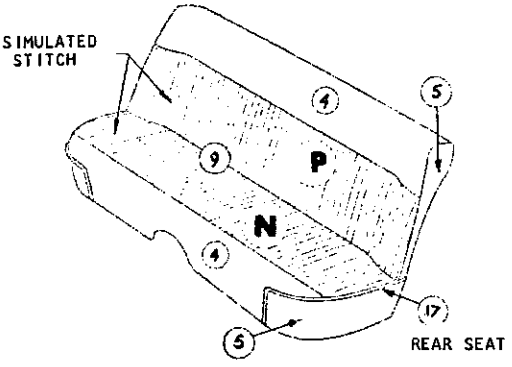

DISTRIBUTION OF MATERIAL

4	IMITATION LEATHER	32-CH-22
5	IMITATION LEATHER	32A-CH-22
6	IMITATION LEATHER	34-DA-22
7	IMITATION LEATHER	34A-DA-22
8	IMITATION LEATHER	18-T-16
9	IMITATION LEATHER	32-DG-22
10	IMITATION LEATHER	21-BE-67
11	IMITATION LEATHER	.012-L-22
12	IMITATION LEATHER	.012A-L-22
16	LACE	
17	EXTRUDED VINYL	
18	FLOOR COVERING-FRONT-RUBBER	
19	FLOOR COVERING-REAR-RUBBER	
20	FLOOR COVERING-LUGG. COMPT. PRINTED JUTE	
21	EMBOSSED CARDBOARD	
22	CARDBOARD	
25	HARDBOARD	
30	PLASTIC	
31	PAINT	
32	METAL	
33	MOULDING	
36	MYLAR	
38	MOULDED RESIN	
39	PLASTISOL	

Distribution Drawing Legend Page Appears Following Illustration Section

Code 564

SVL-414 1962 VALIANT SV1-L 4 DOOR SEDAN
IMITATION LEATHER

MyMopar.com

1962 VALIANT - S SERIES

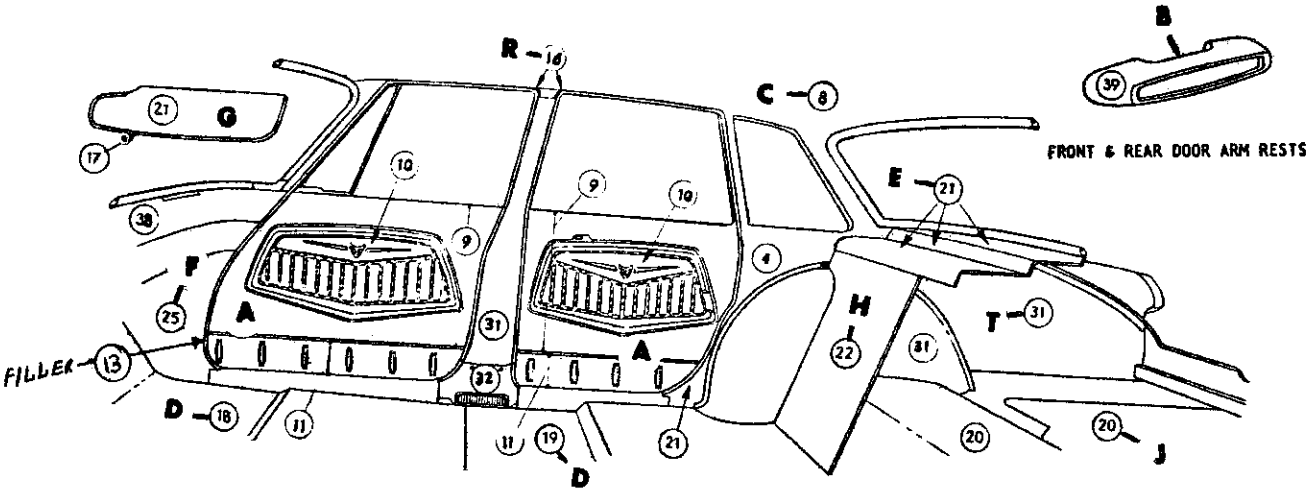

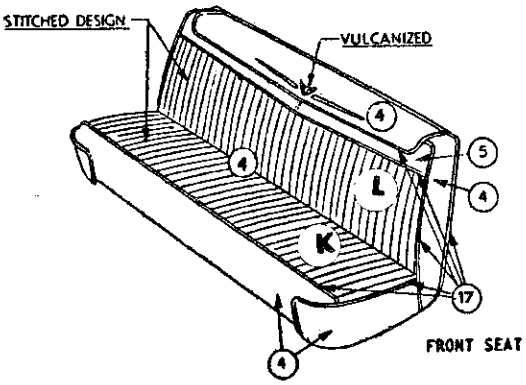

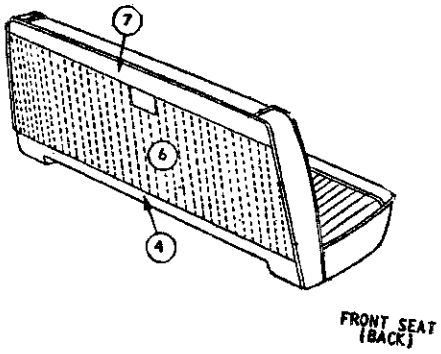

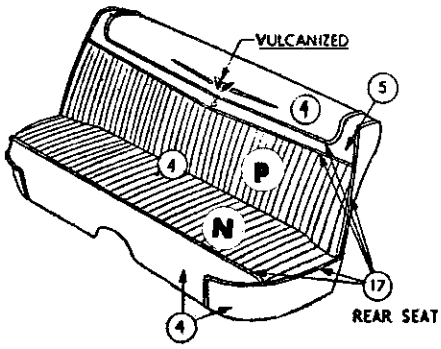

DISTRIBUTION OF MATERIAL

4	IMITATION LEATHER	32-CH-22
5	IMITATION LEATHER	32A-CH-22
6	IMITATION LEATHER	34-DB-22
7	IMITATION LEATHER	34DA-22
8	IMITATION LEATHER	18-T-16
9	IMITATION LEATHER	21-CM-22
10	IMITATION LEATHER	21A-CM-22
11	IMITATION LEATHER	.012-L-22
13	IMITATION LEATHER	19-C-22
16	LACE	
17	EXTRUDED VINYL	
18	FLOOR COVERING-FRONT-CARPET	
19	FLOOR COVERING-REAR-CARPET	
20	FLOOR COVERING-LUGG.COMPT.PRINTED JUTE	
21	EMBOSSED CARDBOARD	
22	CARDBOARD	
25	HARDBOARD	
30	PLASTIC	
31	PAINT	
32	METAL	
33	MOULDING	
36	MYLAR	
38	MOULDED RESIN	
39	PLASTISOL	

Distribution Drawing Legend Page Appears Following Illustration Section

Codes 571, 573, 575

SVH-414 **1962 VALIANT SV1-H 4 DOOR SEDAN IMITATION LEATHER**

MyMopar.com

1962 VALIANT - S SERIES

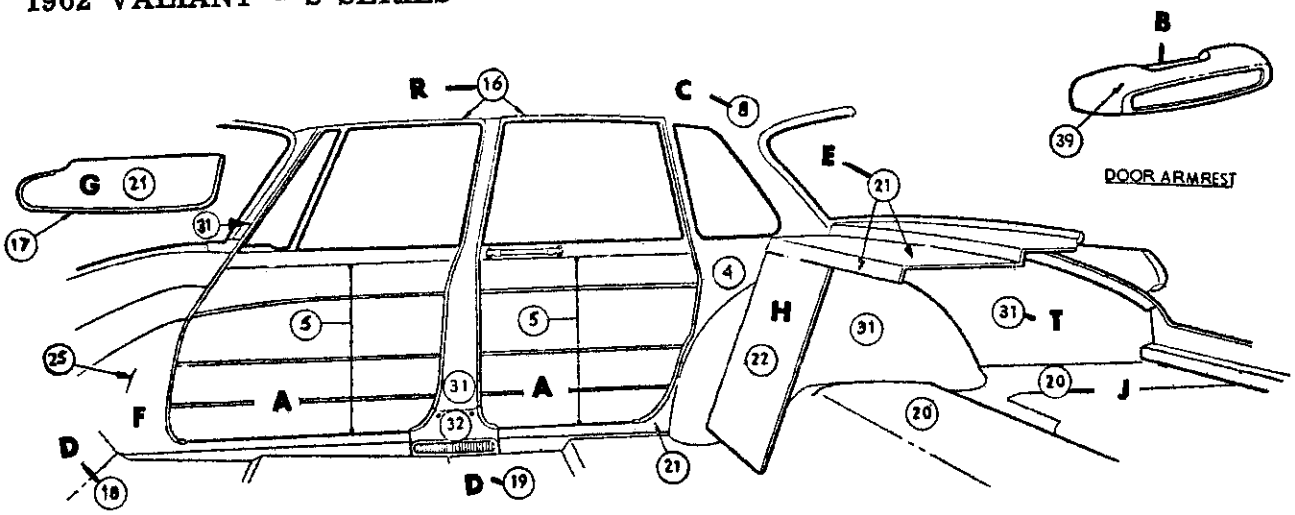

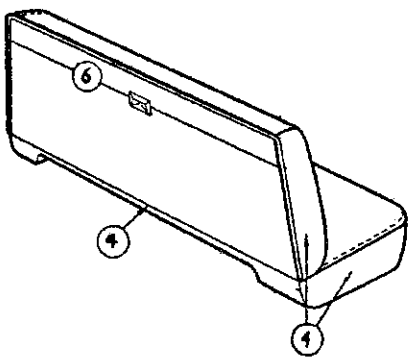

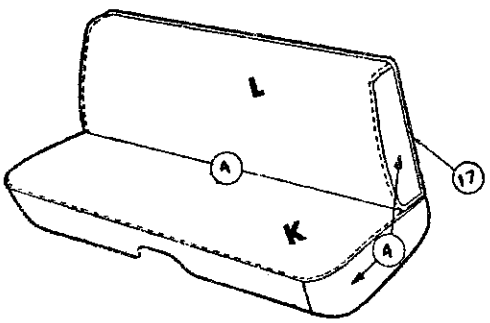

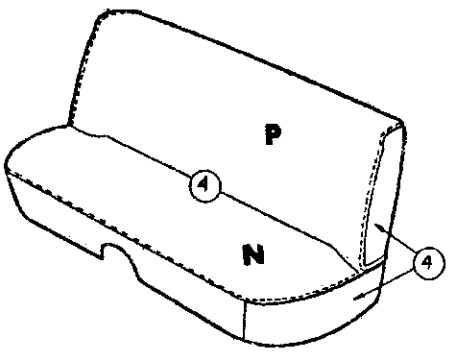

DISTRIBUTION OF MATERIAL

4	IMITATION LEATHER	32-CH-22
5	IMITATION LEATHER	19-CT-22
6	IMITATION LEATHER	34-DA-22
8	IMITATION LEATHER	12-Y-71
16	LACE	
17	EXTRUDED VINYL	
18	FLOOR COVERING-FRONT-RUBBER	
19	FLOOR COVERING-REAR-RUBBER	
20	FLOOR COVERING-LUGG. COMPT. PRINTED JUTE	
21	EMBOSSED CARDBOARD	
25	HARDBOARD	
30	PLASTIC	
31	PAINT	
32	METAL	
33	MOULDING	
36	MYLAR	
38	MOULDED RESIN	
39	PLASTISOL	

Distribution Drawing Legend Page Appears Following Illustration Section

Code 594

SVL-414A

1962 VALIANT SV1-L 4 DOOR SEDAN IMITATION LEATHER TRIM

MyMopar.com

1962 VALIANT - S SERIES

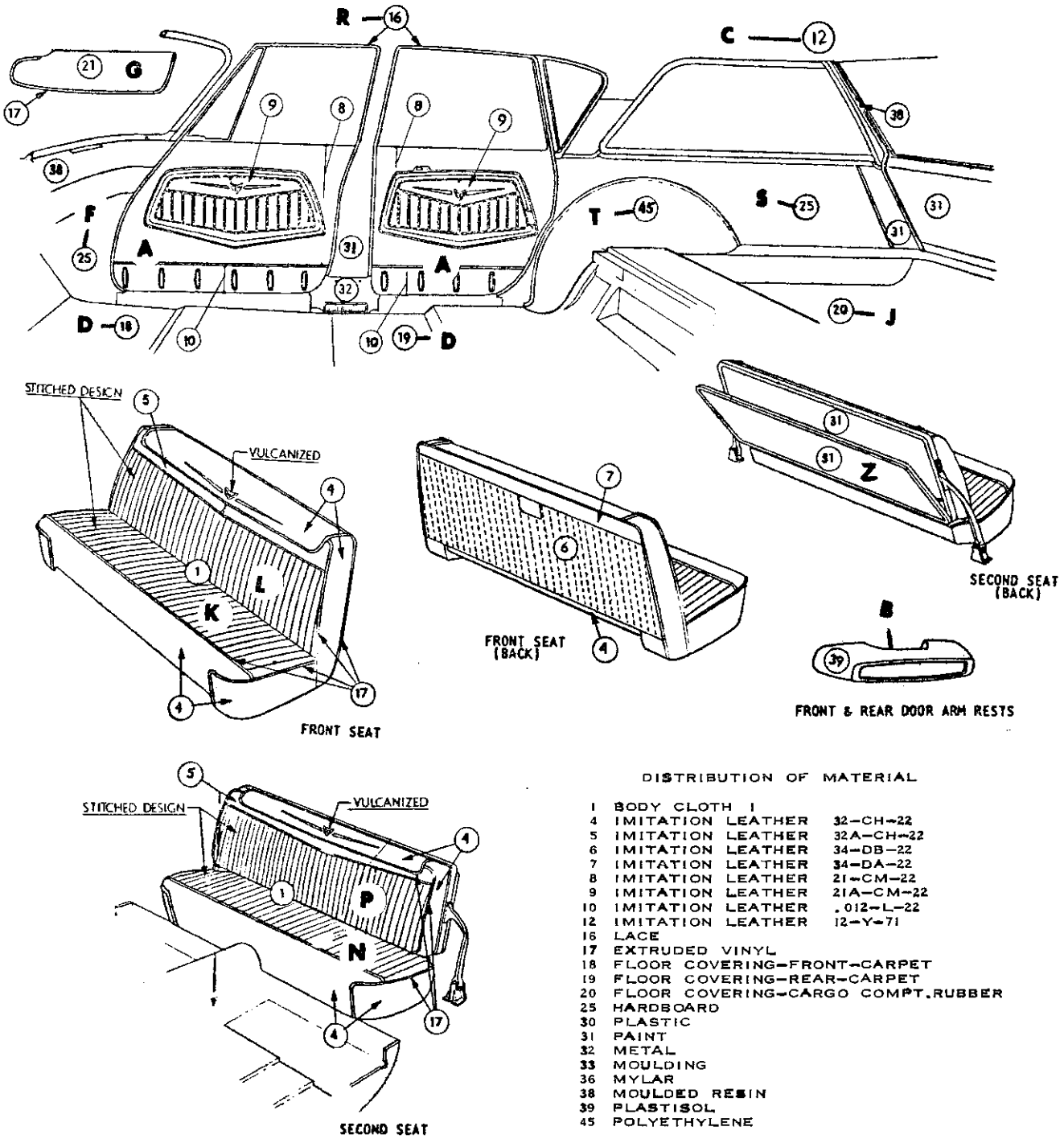

DISTRIBUTION OF MATERIAL

1	BODY CLOTH 1	
4	IMITATION LEATHER	32-CH-22
5	IMITATION LEATHER	32A-CH-22
6	IMITATION LEATHER	34-DB-22
7	IMITATION LEATHER	34-DA-22
8	IMITATION LEATHER	21-CM-22
9	IMITATION LEATHER	21A-CM-22
10	IMITATION LEATHER	.012-L-22
12	IMITATION LEATHER	12-Y-71
16	LACE	
17	EXTRUDED VINYL	
18	FLOOR COVERING-FRONT-CARPET	
19	FLOOR COVERING-REAR-CARPET	
20	FLOOR COVERING-CARGO COMPT.RUBBER	
25	HARDBOARD	
30	PLASTIC	
31	PAINT	
32	METAL	
33	MOULDING	
36	MYLAR	
38	MOULDED RESIN	
39	PLASTISOL	
45	POLYETHYLENE	

Distribution Drawing Legend Page Appears Following Illustration Section

Codes 521, 522, 525

SVH-451 **1962 VALIANT SV1-H 4 DOOR STATION WAGON CLOTH & IMITATION LEATHER COMB.**

MyMopar.com

1962 VALIANT - S SERIES

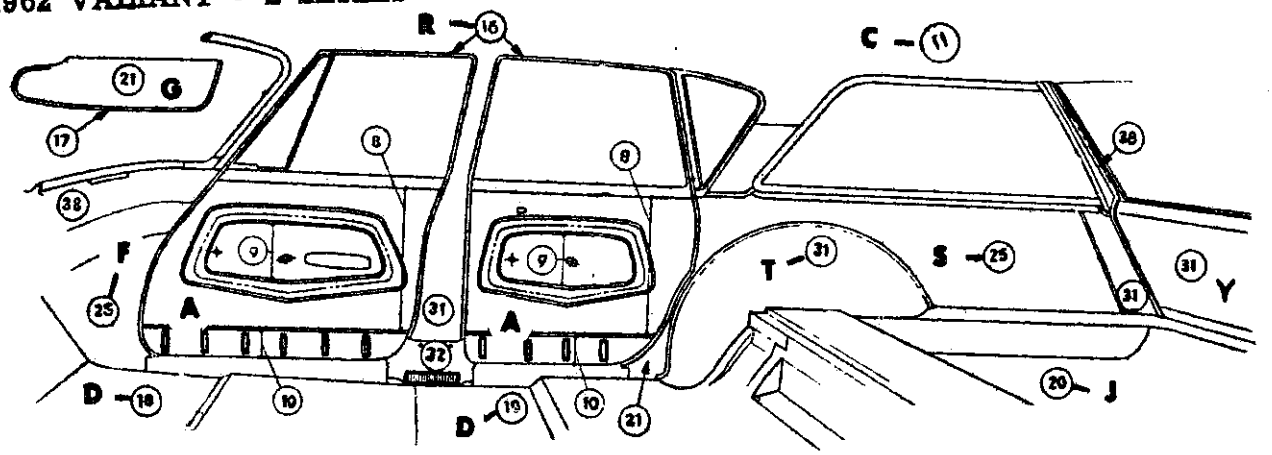

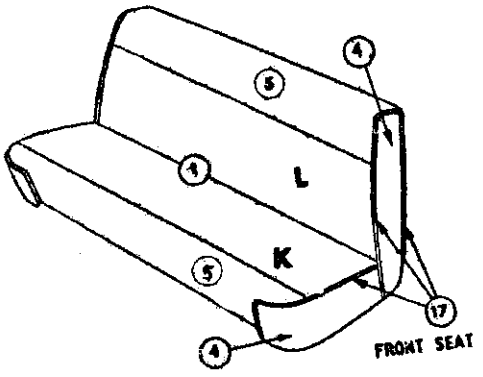

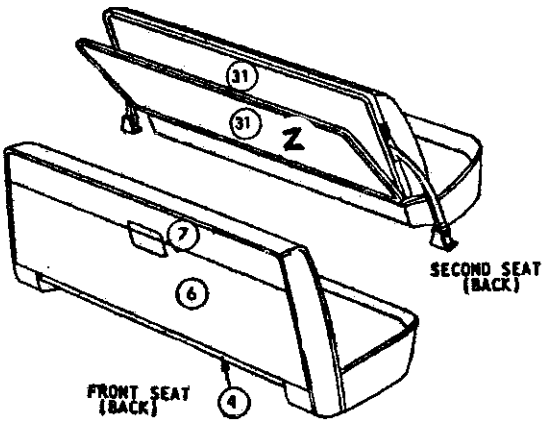

FRONT & REAR DOOR ARM RESTS

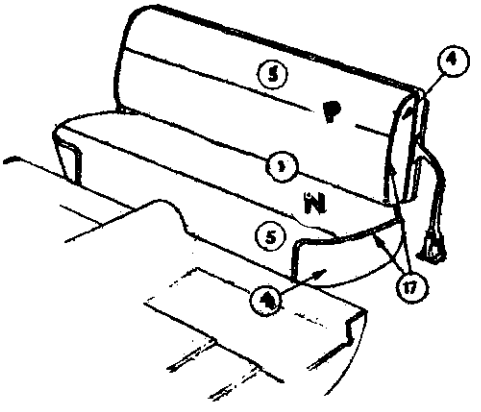

SECOND SEAT

DISTRIBUTION OF MATERIAL

1	BODY CLOTH I	
4	IMITATION LEATHER	32-CH-22
5	IMITATION LEATHER	32A-CH-22
6	IMITATION LEATHER	34-DA-22
7	IMITATION LEATHER	34A-DA-22
8	IMITATION LEATHER	.012-L-22
9	IMITATION LEATHER	21-BE-67
10	IMITATION LEATHER	.012A-L-22
11	IMITATION LEATHER	12-Y-71
16	LACE	
17	EXTRUDED VINYL	
18	FLOOR COVERING-FRONT-RUBBER	
19	FLOOR COVERING-REAR-RUBBER	
20	FLOOR COVERING-CARGO COMPT. RUBBER	
23	PRINTED CARDBOARD	
25	HARDBOARD	
30	PLASTIC	
31	PAINT	
32	METAL	
33	MOULDING	
36	MYLAR	
38	MOULDED RESIN	
39	PLASTISOL	

Distribution Drawing Legend Page Appears Following Illustration Section

Codes 551, 554, 555

SVL-451 **1962 VALIANT SV1-L 4 DOOR STATION WAGON CLOTH & IMITATION LEATHER COMB.**

MyMopar.com

1962 VALIANT - S SERIES

FRONT DOOR & REAR QUARTER ARM RESTS

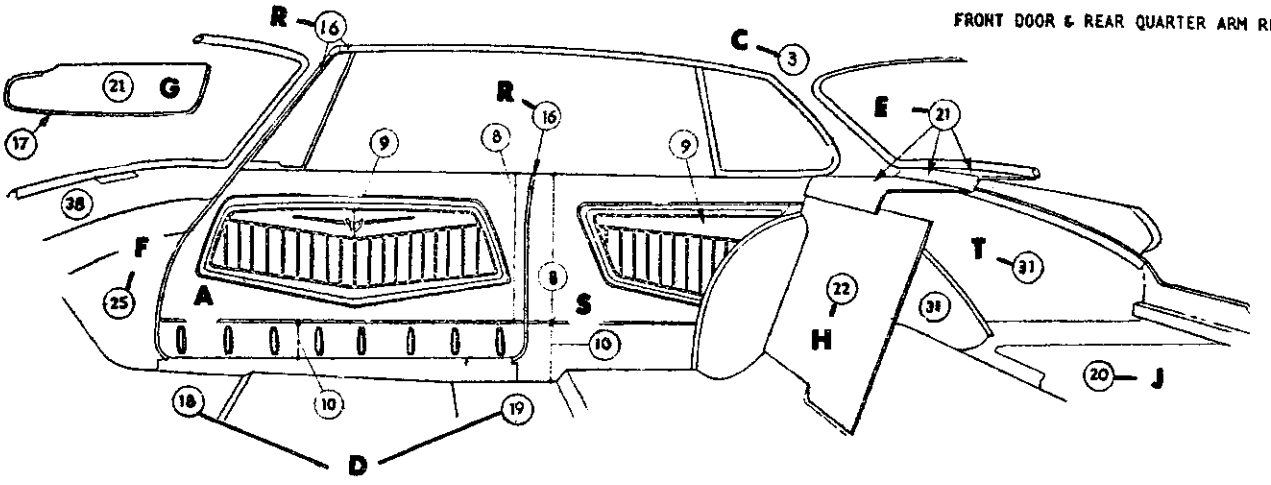

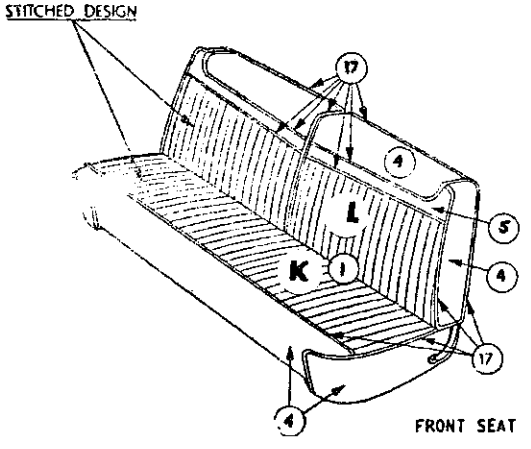

FRONT SEAT

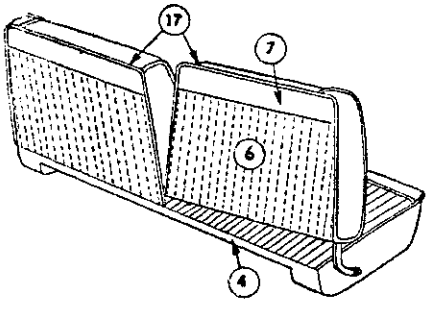

FRONT SEAT (BACK)

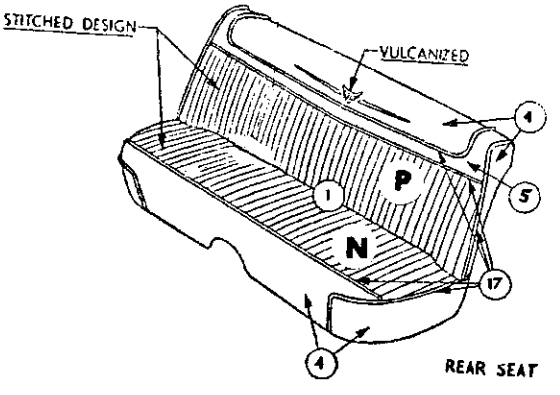

REAR SEAT

DISTRIBUTION OF MATERIAL

1	BODY CLOTH	1
33	HEADLINING	
4	IMITATION LEATHER	32-CH-22
5	IMITATION LEATHER	32A-CH-22
6	IMITATION LEATHER	34-DB-22
7	IMITATION LEATHER	34-DA-22
8	IMITATION LEATHER	21-CM-22
9	IMITATION LEATHER	21A-CM-22
10	IMITATION LEATHER	.012-L-22
16	LACE	
17	EXTRUDED VINYL	
18	FLOOR COVERING-FRONT-RUBBER	
19	FLOOR COVERING-REAR-RUBBER	
20	FLOOR COVERING-LUGG. COMPT. PRINTED JUTE	
21	EMBOSSED CARDBOARD	
22	CARDBOARD	
25	HARDBOARD	
30	PLASTIC	
31	PAINT	
32	METAL	
33	MOULDING	
36	MYLAR	
38	MOULDED RESIN	
39	PLASTISOL	

Distribution Drawing Legend Page Appears Following Illustration Section

Codes 521, 522, 525

SVH-231 1962 VALIANT SV1-H 2 DOOR HARD TOP
CLOTH & IMITATION LEATHER COMB.

MyMopar.com

1962 VALIANT - S SERIES

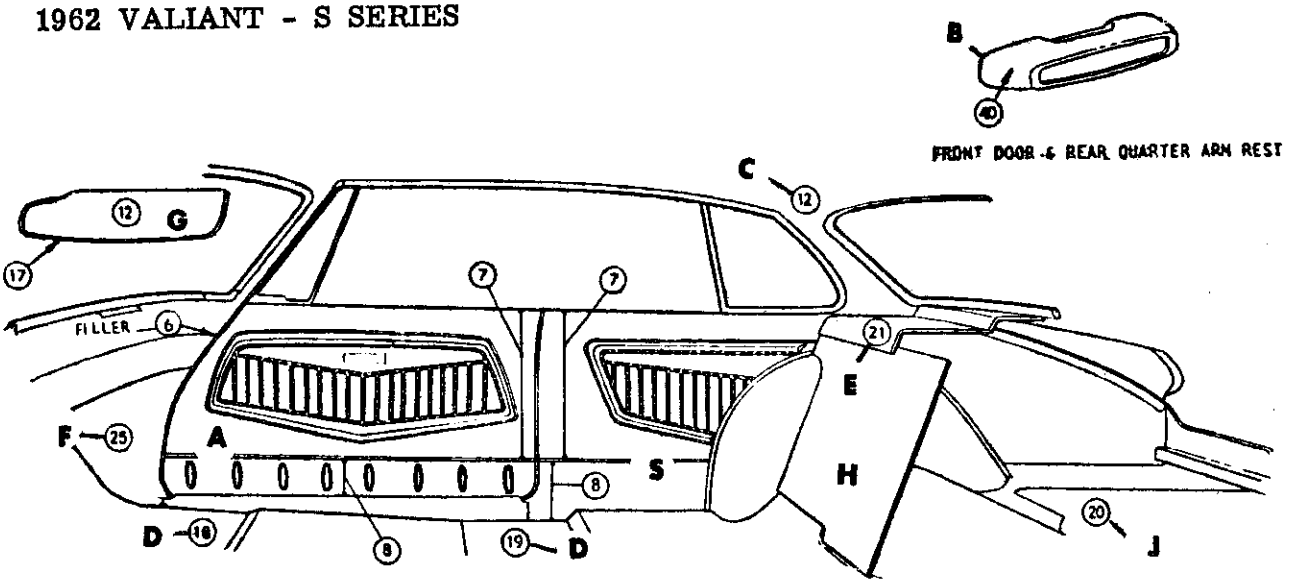

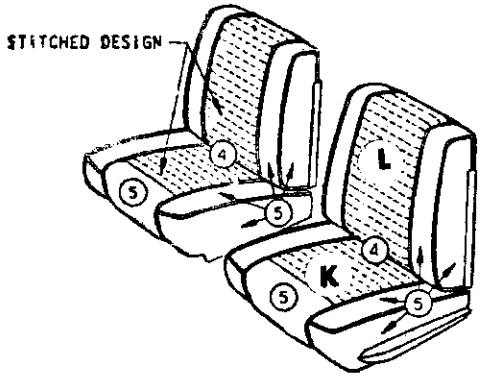

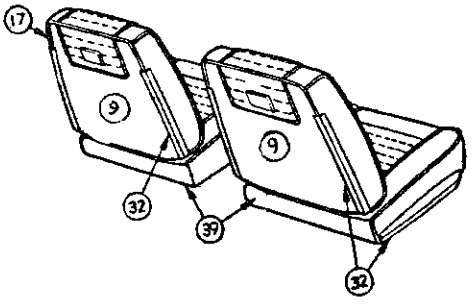

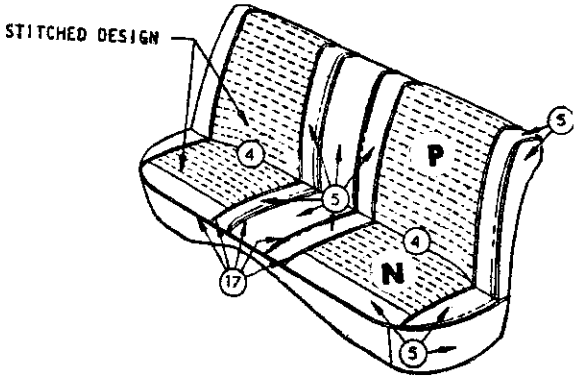

DISTRIBUTION OF MATERIAL

4	IMITATION LEATHER	28-AM-22
5	IMITATION LEATHER	32-CH-22
6	IMITATION LEATHER	19-C-22
7	IMITATION LEATHER	21-CM-22
8	IMITATION LEATHER	.012-L-22
9	IMITATION LEATHER	16-AR-22
12	IMITATION LEATHER	15-Y-61
16	LACE	
17	EXTRUDED VINYL	
18	FLOOR COVERING-FRONT-CARPET	
19	FLOOR COVERING-REAR-CARPET	
20	FLOOR COVERING-LUGG. COMPT. PRINTED JUTE	
21	EMBOSSED CARDBOARD	
25	OSNABURG	
30	PLASTIC	
31	PAINT	
32	METAL	
36	MYLAR	
38	MOULDED RESIN	
39	CARPET	
40	PLASTISOL	

Distribution Drawing Legend Page Appears Following Illustration Section

Codes 581, 582, 583, 585

SVP-234 1962 VALIANT SV1-P 2 DOOR HARD TOP
IMITATION LEATHER

MyMopar.com

1962 VALIANT - S SERIES

Distribution Drawing Legend

See Illustrations For Letter Identification

Letter	Description	Code
A	Panel, Door Trim	23-92-5
B	Arm Rest, Door, Front	23-76-3
	Center, Front Seat	23-76-34
	Door, Rear	23-76-59
	Quarter Panel	23-76-66
C	Headlining	23-86-3
D	Floor Cover, Front, Carpet	23-79-3
	Rubber	23-20-8
	Rear, Carpet	23-79-33
	Rubber	23-20-41
E	Panel, Shelf Trim	23-102-3
F	Panel, Cowl Trim	23-91-6
G	Panel, Visor	23-103-3
H	Panel, Luggage Compartment, Front	23-96-3
J	Cover, Luggage Compartment Floor	23-20-29
K	Cover, Front Seat Cushion	23-108-5
L	Cover, Front Seat Back	23-108-16
M	Cover, Front Seat Hinge	23-108-84
N	Cover, Rear Seat Cushion	23-109-36
P	Cover, Rear Seat Back	23-109-4
Q	Cover, Rear Seat Cushion Bottom Panel	23-109-40
R	Weathercord, Door	23-113-2
	Hinge Pillar	23-113-25
	Lock Pillar	23-113-30
	w/Weatherstrip	23-66-33
S	Panel, Quarter Trim	23-101-3
T	Cover, Wheelhouse	23-96-8
U	Top Deck and Side Quarter	23-112-108
V	Curtain, Folding Top Back	23-112-45
W	Cover, Center Pillar	23-99-4
X	Panel, Folding Top Well Pocket	23-112-153
Y	Cover, Tailgate Inside Panel	23-79-79
Z	Cover, Rear Seat Back Panel	23-109-5

MyMopar.com

NOTES

MyMopar.com

BODY CODE	COLUMN LEGEND
	SV1-L (V-100)
111 (21)	2 D. Sedan
113 (41)	4 D. Sedan
156 (45A)	4 D. 6 Pass. Wagon
183 (41)	4 D. Sedan (Taxi)
	SV1-H (V-200)
131 (21)	2 D. Sedan
133 (41)	4 D. Sedan
176 (45A)	4 D. 6 Pass. Wagon

STARTING SERIAL NUMBERS

		Detroit Built	St. Louis Built	Newark Built	Los Angeles Built
SV1-L	(V100)	1122-100001	1127-100001	1126-100001	1125-100001
SV1-L	(V100 Suburban)	1522-100001	1527-100001	1526-100001	1525-100001
SV1-H	(V200)	1322-100001	1327-100001	1326-100001	1325-100001
SV1-H	(V200 Suburban)	1722-100001	1727-100001	1726-100001	1725-100001
SV1-P	(Signet 200)	1422-100001	1427-100001	1426-100001	1425-100001

TRIM CODE	MODEL	MATERIAL Cloth	Vinyl	Leather	COLOR	SED.	SP. 4D.	SUB.	SP. CL. CP.	CV. CP.
501	V1-L	★	★	-	Gray and Blue	★	-	-	-	-
504	V1-L	★	★	-	Gray	★	-	-	-	-
505	V1-L	★	★	-	Gray and Red	★	-	-	-	-
521	V1-H	★	★	-	Blue	★	-	★	-	-
522	V1-H	☆	★	-	Green	★	-	★	-	-
525	V1-H	★	★	-	Red	★	-	★	-	-
551	V1-L	★	★	-	Gray and Blue	-	-	★	-	-
554	V1-L	★	★	-	Gray	-	-	★	-	-
555	V1-L	★	★	-	Gray and Red	-	-	★	-	-
564	V1-L	-	★	-	Gray	★	-	-	-	-
571	V1-H	-	★	-	Blue	★	-	-	-	-
573	V1-H	-	★	-	Cocoa	★	-	-	-	-
575	V1-H	-	★	-	Red	★	-	-	-	-
599	V1-H	-	★	-	Gray	★	-	-	-	-
594	V1-L	-	★	-	Gray	★	-	-	-	-
581	V1-P	-	★	-	Blue	-	-	-	★	-
582	V1-P	-	★	-	Green	-	-	-	★	-
583	V1-P	-	★	-	Cocoa	-	-	-	★	-
585	V1-P	-	★	-	Red	-	-	-	★	-

★ Indicates use as required.
B Indicates parts not listed in any previous parts book.
Right and left part numbers are on same line, first number is right, second number is left.
* Indicates change or addition.

Printed in U.S.A.
Prices and specifications subject to change without notice.
May 1, 1962 Supersedes Nov. 30, 1961.

MyMopar.com

NOTE: RIGHT HAND AND LEFT HAND PARTS LISTED ON THE SAME LINE. Whenever right and left hand parts are identified by consecutive part numbers, they will be listed as in the following example: PANEL, Door Trim 2083 344-5
Interpreted, this indicates that Panel, right is Part No. 2083 344 and Panel, left is Part No. 2083 345.

CODE	REMARKS	PER CAR	SED.	SP. 4 D.	SUB.	SP. CL. CP.	CV. CP.
23-76-3	ARM REST, Front Door						
	V1-L, V1-H (gray)	2	2273 003	---- ---	2273 003		
	(code 594) (gray)	2	2212 691				
	V1-H (codes 521, 571) (blue)	2	2273 000	---- ---	2273 000		
	(code 522) (green)	2	2273 001	---- ---	2273 001		
	(codes 525, 575) (red)	2	2273 004	---- ---	2273 004		
	(code 573) (cocoa)	2	2273 002				
	(also specify screw)	2	162 091	---- ---	162 091		
23-76-16	NUT, Door and Quarter Panel Arm Rest						
	V1-H	4	1280 134	---- ---	1280 134	1280 134	
23-76-59	ARM REST, Rear Door						
	V1-L (codes 501, 504, 505, 551, 554, 555, 564) (gray)	2	2273 003	---- ---	2273 003		
	(code 594)	2	2212 691				
	V1-H (codes 521, 571) (blue)	2	2273 000	---- ---	2273 000		
	(code 522) (green)	2	2273 001	---- ---	2273 001		
	(code 524) (gray)	2	2273 003	---- ---	2273 003		
	(codes 525, 575) (red)	2	2273 004	---- ---	2273 004		
	(code 573) (cocoa)	2	2273 002				
	(also specify screw)	2	162 091	---- ---	162 091		
23-76-66	ARM REST, Rear Quarter						
	V1-L (2 D.)						
	(codes 501, 504, 505) (gray)	2	*2273 003				
	V1-P (code 581) (blue)	2	---- ---	---- ---	---- ---	2273 000	
	(code 582) (green)	2	---- ---	---- ---	---- ---	2273 001	
	(code 583) (cocoa)	2	---- ---	---- ---	---- ---	2273 002	
	(code 585) (red)	2	---- ---	---- ---	---- ---	2273 004	
23-77-3	STRAP, Assist						
	V1-L (code 594) (gray)	2	2274 841				
23-79-3	CARPET, Front Floor						
	V1-H (codes 521, 571) (blue)	1	*2274 873	---- ---	*2274 873	*2274 873	
	(code 522) (green)	1	2274 871	---- ---	2274 871	2274 871	
	(code 573) (cordovan)	1	2274 870				
	(codes 525, 575) (black)	1	2274 872	---- ---	*2274 872	*2274 872	
	V1-P (code 581) (blue)	1	---- ---	---- ---	---- ---	2297 201	
	(code 582) (green)	1	---- ---	---- ---	---- ---	2297 202	
	(code 583) (cordovan)	1	---- ---	---- ---	---- ---	2297 203	
	(code 585) (red)	1	---- ---	---- ---	---- ---	2297 220	
23-79-33	CARPET, Rear Floor						
	V1-H, V1-P						
	(codes 521, 571) (blue)	1	*2272 132	---- ---	*2272 132	*2272 132	
	(code 522) (green)	1	*2274 832	---- ---	*2274 832	*2274 832	
	(code 573) (cordovan)	1	---- ---	---- ---	---- ---	*2272 133	
	(codes 525, 575) (black)	1	2249 368	---- ---	2249 368		
	V1-P						
	(code 581) (blue)	1	---- ---	---- ---	---- ---	*2297 207	
	(code 582) (green)	1	---- ---	---- ---	---- ---	*2297 208	
	(code 583) (cordovan)	1	---- ---	---- ---	---- ---	*2297 209	
	(code 585) (red)	1	---- ---	---- ---	---- ---	*2297 222	
23-81-3	HANDLE, Rear Door Pull-To						
	V1-L	1	1697 413				
23-82-30	HOOK, Coat Hanger						
	V1	2	2083 292	---- ---	2083 292	2083 292	2165 837

★ Indicates use as required.
⊟ Indicates parts not listed in any previous parts book.
March 8, 1963 Supersedes May 1, 1962.

Printed in U.S.A.
Prices and specifications subject to change without notice.
Right and left part numbers are on same line, first number is right, second number is left.
* Indicates change or addition.

MyMopar.com

CODE	REMARKS	PER CAR	SED.	SP. 4 D.	SUB.	SP. CL. CP.	CV. CP.
23-84-3	PAD, Instrument Panel Trim						
	V1-L, V1-H (codes 501, 521, 551, 571) (blue)	1	2272 144	---- ---	2272 144		
	(codes 504, 554, 564, 599)(gray)	1	2272 145	---- ---	2272 145		
	(codes 505, 525, 555, 575)(red)	1	2272 146	---- ---	2272 146		
	(code 573) (cocoa)	1	2272 148				
	V1-H (plastic)						
	(code 522) (green)	1	2274 843	---- ---	2274 843		
	V1-P (code 581) (blue)	1	---- ---	---- ---	---- ---	2272 144	
	(code 582) (green)	1	---- ---	---- ---	---- ---	2274 843	
	(code 583) (cocoa)	1	---- ---	---- ---	---- ---	2297 224	
	(code 585) (red)	1	---- ---	---- ---	---- ---	2272 146	
	(fastener)	2	6008 222	---- ---	6008 222	6008 222	
23-86-3	HEADLINING and LISTING						
	V1-L, V1-H (cloth) (codes 501, 504, 505, 525) (gray)	1	2246 674	---- ---	---- ---	2246 674	
	(code 521) (blue)	1	*2411 021	---- ---	*2411 029	2246 675	
	(code 522) (green)	1	*2411 022	---- ---	2274 335	*2411 022	
	(codes 564, 575, 594) (gray)	1	*2293 586				
	(code 571) (blue)	1	*2293 587				
	(code 573) (beige)	1	*2293 960				
	(codes 525, 551, 554, 555)(gray)	1	---- ---	---- ---	*2246 680		
	V1-L, V1-H (12 oz vinyl)						
	(codes 501, 504, 505, 525)(gray)	1	*2431 942	---- ---	---- ---	*2431 942	
	(code 521) (blue)	1	2411 021	---- ---	2411 029	*2411 021	
	(code 522) (green)	1	2411 022	---- ---	2411 030	*2411 022	
	(codes 564, 575, 594) (gray)	1	2411 020				
	V1-L, V1-H (15 oz. vinyl)						
	(codes 501, 504, 505, 525, 594) (gray)	1	*2431 942				
	(code 521) (blue)	1	*2431 943	---- ---	*2431 947		
	(code 522) (green)	1	*2431 944	---- ---	*2431 948		
	(codes 525, 551, 554, 555)(gray)	1	---- ---	---- ---	*2431 946		
	V1-P (code 581)	1	---- ---	---- ---	---- ---	2296 251	
	(code 582)	1	---- ---	---- ---	---- ---	2296 252	
	(code 583)	1	---- ---	---- ---	---- ---	2296 253	
	(code 585)	1	---- ---	---- ---	---- ---	2296 021	
23-86-10	SUPPORT, Roof Bow						
	V1 (steel) (No. 1)	1	2243 534	---- ---	2243 534	2243 534	
	(No. 2)	1	---- ---	---- ---	2243 656		
	(No. 3)	1	---- ---	---- ---	2243 657		
23-86-19	STRIP, Headlining						
	V1	1	2259 196-7	---- ---	2259 196-7		
	Frt.	★	2082 504-5	---- ---	2082 504-5		
23-91-6	PANEL, Cowl Trim						
	V1-L, V1-H (gray)	1	2272 026-7	---- ---	2272 026-7		
23-91-20	RETAINER, Cowl Side Trim Panel						
	V1	1	2081 958-9	---- ---	2081 958-9	2081 958-9	
23-92-5	PANEL, Door Trim						
	V1-L (codes 501, 504, 505) (2 D.)	1	2272 490-1				
	(codes 501, 504, 505, 551, 554, 555, 564) Frt.	1	2272 440-1	---- ---	2272 440-1		
	Rr.	1	2272 442-3	---- ---	2272 442-3		
	(code 594) (taxi) Frt.	1	2251 002-3				
	Rr.	1	2251 004-5				
	V1-H (2 D.) (code 521)	1	2297 082-3				
	(code 522)	1	2297 084-5				
	(code 525)	1	2297 086-7				
	V1-H (4 D.)						
	(codes 521, 571) Frt.	1	2272 444-5	---- ---	2272 444-5		
	Rr.	1	2272 450-1	---- ---	2272 450-1		
	(code 522) Frt.	1	2274 818-9	---- ---	2274 818-9		
	Rr.	1	2274 820-1	---- ---	2274 820-1		

★ Indicates use as required.
⊟ Indicates parts not listed in any previous parts book.
Right and left part numbers are on same line, first number is right, second number is left.
* Indicates change or addition.

Printed in U.S.A.
Prices and specifications subject to change without notice.
March 8, 1963 Supersedes May 1, 1962.

MyMopar.com

CODE	REMARKS	PER CAR	SED.	SP. 4 D.	SUB.	SP. CL. CP.	CV. CP.
23-92-5	PANEL, Door Trim - Cont'd						
	V1-H (4 D.)						
	(codes 525, 575) Frt.	1	2272 448-9	---- ---	2272 448-9		
	Rr.	1	2272 454-5	---- ---	2272 454-5		
	(code 573) Frt.	1	2297 170-1				
	Rr.	1	2297 172-3				
	V1-P (code 581)	1	---- ---	---- ---	---- ---	2297 182-3	
	(code 582)	1	---- ---	---- ---	---- ---	2297 184-5	
	(code 583)	1	---- ---	---- ---	---- ---	2297 186-7	
	(code 585)	1	---- ---	---- ---	---- ---	2297 188-9	
23-96-3	LINING, Luggage Compartment Front						
	V1	1	2083 227	---- ---	---- ---	2083 227	
23-96-8	COVER, Wheelhouse Inner Panel						
	V1-H (code 521) (blue)	1	---- ---	---- ---	2272 106-7		
	(code 522) (green)	1	---- ---	---- ---	2274 816-7		
	(code 525) (red)	1	---- ---	---- ---	2272 112-3		
23-99-38	PANEL, Rear Upper Pillar Reinforcement Trim						
	V1-L, V1-H	1	---- ---	---- ---	2272 060-1		
23-101-3	PANEL, Rear Quarter Trim						
	V1-L, V1-H (2 D.)						
	(codes 501, 504, 505)	1	2272 488-9				
	(code 521)	1	2297 088-9				
	(code 522)	1	2297 090-1				
	(code 525)	1	2297 092-3				
	V1-L, V1-H						
	(codes 501, 504, 505, 564, 565) (upper)	1	2293 774-5				
	(codes 521, 571) (upper)	1	2293 430-1				
	(code 522) (upper)	1	2293 432-3				
	(codes 525, 575) (upper)	1	2293 440-1				
	(code 594) (upper)	1	2251 092-3				
	(code 594) (lower)	1	2293 438-9				
	(codes 501, 504, 505, 521, 522, 524, 551, 554, 564, 571) (lower)(gray)	1	2272 038-9	---- ---	2272 038-9		
	(codes 521, 522, 525, 551, 554, 555) (upper)	1	---- ---	---- ---	2272 046-7		
	V1-P (code 581)	1	---- ---	---- ---	---- ---	2297 190-1	
	(code 582)	1	---- ---	---- ---	---- ---	2297 192-3	
	(code 583)	1	---- ---	---- ---	---- ---	2297 194-5	
	(code 585)	1	---- ---	---- ---	---- ---	2297 196-7	
	(fastener) (2 D.)	★	* 975 633	---- ---	---- ---	* 975 633	
23-102-3	PANEL, Shelf Trim						
	V1-L, V1-H, V1-P (gray)	1	2272 064	---- ---	---- ---	2272 064	
23-103-3	PANEL, Visor Trim						
	V1-L (gray)	2	2272 104	---- ---	2272 104		
	(padded) (white)	2	2298 648	---- ---	2298 648		
	V1-H (codes 521, 571) (blue)	2	2272 102	---- ---	2272 102		
	(code 573) (beige)	2	2272 103				
	(code 522) (green)	2	2274 840	---- ---	2274 840		
	(codes 525, 575) (gray)	2	2272 104	---- ---	2272 104		
	(padded) (white)	2	2298 648	---- ---	2298 648		
	V1-P (code 581) (blue)	2	---- ---	---- ---	---- ---	2297 162	
	(code 582) (green)	2	---- ---	---- ---	---- ---	2297 163	
	(code 583) (beige)	2	---- ---	---- ---	---- ---	2297 164	
	(code 585) (white)	2	---- ---	---- ---	---- ---	2274 998	

★ Indicates use as required.
⊟ Indicates parts not listed in any previous parts book.
March 8, 1963 Supersedes May 1, 1962.

Printed in U.S.A.
Prices and specifications subject to change without notice.
Right and left part numbers are on same line, first number is right, second number is left.
* Indicates change or addition.

MyMopar.com

CODE	REMARKS	PER CAR	SED.	SP. 4 D.	SUB.	SP. CL. CP.	CV. CP.
23-103-10	ARM and BRACKET, Visor						
	V1	1	2082 676-7	---- ---	2082 676-7		
	V1-P (chrome)	1	---- ---	---- ---	---- ---	2292 380-1	
23-103-18	WASHER, Visor Arm Tension Spring						
	V1	★	6000 106	---- ---	6000 106	6000 106	
23-108-4	CUSHION, Front Seat						
	V1-L (2 D.) (codes 501, 504, 505)	1	2272 691				
	(w/airfoam pad)	1	2411 203				
	(w/heavy duty springs)	1	2272 692				
	(w/heavy duty springs and airfoam pad)	1	2411 204				
	V1-L (4 D.) (codes 501, 504, 505)	1	2272 673				
	(w/airfoam pad)	1	2411 191				
	(w/heavy duty springs)	1	2272 674				
	(w/heavy duty springs and airfoam pad)	1	2411 192				
	(code 564)	1	2274 276				
	(w/airfoam pad)	1	2296 034				
	V1-H (code 571)	1	2272 846				
	(code 573)	1	2293 970				
	(code 575)	1	2272 847				
	V1-H (4 D.) (w/airfoam pad)						
	(code 571)	1	2411 217				
	(code 573)	1	2411 218				
	(code 575)	1	2411 219				
	V1-L (code 594)	1	2274 325				
	(w/airfoam pad)	1	2411 209				
	V1-H (2 D.)						
	(code 521)	1	2272 755				
	(code 522)	1	2274 360				
	(code 525)	1	2272 757				
	V1-H (2 D.) (w/airfoam pad)						
	(code 521)	1	2411 223				
	(code 522)	1	2411 224				
	(code 525)	1	2411 225				
	V1-H (code 521)	1	2272 716	---- ---	2272 716		
	(code 522)	1	2274 339	---- ---	2274 339		
	(code 525)	1	2272 718	---- ---	2272 718		
	V1-H (w/airfoam pad)						
	(code 521)	1	2411 211	---- ---	2411 211		
	(code 522)	1	2411 212	---- ---	2411 212		
	(code 525)	1	2411 213	---- ---	2411 213		
	V1-L (codes 551, 554, 555)	1	---- ---	---- ---	2272 700		
	(w/airfoam pad)	1	---- ---	---- ---	2411 197		
	(w/heavy duty springs)	1	---- ---	---- ---	2272 701		
	(w/heavy duty springs and airfoam pad)	1	---- ---	---- ---	2411 198		
	V1-P (code 581)	1	---- ---	---- ---	---- ---	2296 452-3	
	(code 582)	1	---- ---	---- ---	---- ---	2296 454-5	
	(code 583)	1	---- ---	---- ---	---- ---	2296 456-7	
	(code 585)	1	---- ---	---- ---	---- ---	2296 458-9	
23-108-5	COVER, Front Seat Cushion						
	V1-L (2 D.) (codes 501, 504, 505)	1	2272 690				
	V1-L, V1-H (4 D.)						
	(codes 501, 504, 505)	1	2272 672				
	(code 564)	1	2274 275				
	(code 571)	1	2272 844				
	(code 573)	1	2293 969				
	(code 575)	1	2272 845				
	(code 594)	1	2274 324				

★ Indicates use as required.
⊟ Indicates parts not listed in any previous parts book.
Right and left part numbers are on same line, first number is right, second number is left.
* Indicates change or addition.

Printed in U.S.A.
Prices and specifications subject to change without notice.
May 1, 1962 Supersedes Nov. 30, 1961.

MyMopar.com

CODE	REMARKS	PER CAR	SED.	SP. 4 D.	SUB.	SP. CL. CP.	CV. CP.
23-108-5	COVER, Front Seat Cushion-Cont'd						
	V1-H (2 D.)(code 521)	1	*2272 752	---- ---	---- ---	*2272 752	
	(code 522)	1	2274 359	---- ---	---- ---	2274 359	
	(code 525)	1	2272 754	---- ---	---- ---	2272 754	
	V1-H (code 521)	1	2272 713	---- ---	2272 713		
	(code 522)	1	2274 338	---- ---	2274 338		
	(code 525)	1	2272 715	---- ---	2272 715		
	V1-L (codes 551, 554, 555)	1	---- ---	---- ---	2272 699		
	V1-P (code 581)	2	---- ---	---- ---	---- ---	2296 399	
	(code 582)	2	---- ---	---- ---	---- ---	2296 400	
	(code 583)	2	---- ---	---- ---	---- ---	2296 401	
	(code 585)	2	---- ---	---- ---	---- ---	2296 402	
23-108-12	SEAT, Front (less Cushion)						
	V1-L (2 D.)(codes 501, 504, 505)	1	2272 695-6				
	(w/heavy duty springs)	1	2272 711-2				
	V1-L (4 D.)(codes 501, 504, 505)	1	2272 676				
	(w/heavy duty springs)	1	2272 677				
	(ash receiver and std. springs)	1	2293 824	---- ---	2293 835		
	(w/rubber pad and heavy duty springs)	1	---- ---	---- ---	2293 834		
	(code 564)	1	2274 278				
	(code 594)	1	2274 327				
	V1-H (code 521)	1	2272 722	---- ---	2272 722		
	(code 522)	1	2274 343	---- ---	2274 343		
	(code 525)	1	2272 724	---- ---	2272 724		
	(code 571)	1	2272 852				
	(code 573)	1	2293 974				
	(code 575)	1	2272 853				
	V1-L (codes 551, 554, 555)	1	---- ---	---- ---	2272 703		
	(w/heavy duty springs)	1	---- ---	---- ---	2272 704		
23-108-15	SPRING and COVER, Front Seat Back						
	V1-L (codes 551, 554, 555)	1	---- ---	---- ---	2272 710		
	V1-H (code 521)	1	---- ---	---- ---	2272 743		
	(code 522)	1	---- ---	---- ---	2274 358		
	(code 525)	1	---- ---	---- ---	2272 745		
	V1-P (code 581)	2	---- ---	---- ---	---- ---	2296 415	
	(code 582)	2	---- ---	---- ---	---- ---	2296 416	
	(code 583)	2	---- ---	---- ---	---- ---	2296 417	
	(code 585)	2	---- ---	---- ---	---- ---	2296 418	
23-108-16	COVER, Front Seat Back						
	V1-L (2 D.)(codes 501, 504, 505)	1	2272 693-4				
	V1-L (4 D.)(codes 501, 504, 505)	1	2272 675				
	(code 564)	1	2274 277				
	(code 594)	1	2274 326				
	V1-H (code 571)	1	2272 850				
	(code 575)	1	2272 851				
	(code 573)	1	2293 973				
	V1-H (2 D.)(code 521)	1	⊟2272 758-9				
	(code 522)	1	⊟2274 364-5				
	(code 525)	1	⊟2272 762-3				
	V1-H (code 521)	1	2272 719	---- ---	2272 719		
	(code 522)	1	2274 342	---- ---	2274 342		
	(code 525)	1	2272 721	---- ---	2272 721		
	V1-L (codes 551, 554, 555)	1	---- ---	---- ---	2272 702		
	V1-P (code 581)	2	---- ---	---- ---	---- ---	2296 411	
	(code 582)	2	---- ---	---- ---	---- ---	2296 412	
	(code 583)	2	---- ---	---- ---	---- ---	2296 413	
	(code 585)	2	---- ---	---- ---	---- ---	2296 414	

★ Indicates use as required.
⊟ Indicates parts not listed in any previous parts book.
May 1, 1962 Supersedes Nov. 30, 1961.

Printed in U.S.A.
Prices and specifications subject to change without notice.
Right and left part numbers are on same line, first number is right, second number is left.
* Indicates change or addition.

MyMopar.com

CODE	REMARKS	PER CAR	SED.	SP. 4 D.	SUB.	SP. CL. CP.	CV. CP.
23-108-32	COVER or BACK, Back of Front Seat Back						
	V1-P (cover)						
	(code 581)	2	---- ---	---- ---	---- ---	*2296 427	
	(code 582)	2	---- ---	---- ---	---- ---	*2296 428	
	(code 583)	2	---- ---	---- ---	---- ---	*2296 429	
	(code 585)	2	---- ---	---- ---	---- ---	*2296 430	
	V1-P (back)						
	(code 581)	2	---- ---	---- ---	---- ---	2296 427	
	(code 582)	2	---- ---	---- ---	---- ---	2296 428	
	(code 583)	2	---- ---	---- ---	---- ---	2296 429	
	(code 585)	2	---- ---	---- ---	---- ---	2296 430	
23-108-84	COVER, Cushion Frame to Back Hinge Post						
	V1	4	---- ---	---- ---	---- ---	*2172 835	*2172 835
23-108-98	SHIELD, Front Seat Back Frame Side						
	V1-P	2	---- ---	---- ---	---- ---	2161 236-7	
	(cushion side shield)	1	---- ---	---- ---	---- ---	2292 492-3	
23-108-142	BRACKET, Front Seat Side Shield Support						
	V1-P	2	---- ---	---- ---	---- ---	2292 475	
23-109-3	BACK, Rear Seat						
	V1-L (codes 501, 504, 505)	1	2272 684				
	(4 D.)(w/heavy duty springs)	1	2272 685				
	(code 564)	1	2274 283				
	(code 594)	1	2274 332				
	V1-H (code 571)	1	2272 866				
	(code 573)	1	2293 982				
	(code 575)	1	2272 867				
	(code 521)	1	2272 737				
	(code 522)	1	2274 351				
	(code 525)	1	2272 739				
	V1-L, V1-H (spring and cover)						
	(codes 551, 554, 555)	1	---- ---	---- ---	2272 710		
	(code 521)	1	---- ---	---- ---	2272 743		
	(code 522)	1	---- ---	---- ---	2274 358		
	(code 525)	1	---- ---	---- ---	2272 745		
	V1-P (code 581)	1	---- ---	---- ---	---- ---	*2296 107	
	(code 582)	1	---- ---	---- ---	---- ---	*2296 449	
	(code 583)	1	---- ---	---- ---	---- ---	*2296 108	
	(code 585)	1	---- ---	---- ---	---- ---	*2296 109	
23-109-4	COVER, Rear Seat Back						
	V1-L (codes 501, 504, 505)	1	2272 683				
	(codes 551, 554, 555)	1	---- ---	---- ---	2272 709		
	V1-H (code 521)	1	2272 734	---- ---	2272 740		
	(code 522)	1	2274 350	---- ---	2274 357		
	(code 525)	1	2272 736	---- ---	2272 742		
	V1-L (code 564)	1	2274 282				
	(code 594)	1	2274 331				
	V1-H (code 571)	1	2272 864				
	(code 573)	1	2293 981				
	(code 575)	1	2272 865				
	V1-P (code 581)	1	---- ---	---- ---	---- ---	2296 104	
	(code 582)	1	---- ---	---- ---	---- ---	2296 448	
	(code 583)	1	---- ---	---- ---	---- ---	2296 105	
	(code 585)	1	---- ---	---- ---	---- ---	2296 106	

★ Indicates use as required.
⊟ Indicates parts not listed in any previous parts book.
Right and left part numbers are on same line, first number is right, second number is left.
* Indicates change or addition.

Printed in U.S.A.
Prices and specifications subject to change without notice.
May 1, 1962 Supersedes Nov. 30, 1961.

MyMopar.com

CODE	REMARKS	PER CAR	SED.	SP. 4 D.	SUB.	SP. CL. CP.	CV. CP.
23-109-35	CUSHION, Rear Seat						
	V1-L (codes 501, 504, 505)	1	2272 681				
	(w/airfoam pad)	1	2293 833				
	(w/airfoam pad and heavy duty springs)	1	2293 834				
	(4 D.)(w/heavy duty springs)	1	2272 682				
	(code 564)	1	2274 281				
	(code 594)	1	2274 330				
	(w/airfoam pad)	1	2293 634				
	V1-H (code 571)	1	2272 860				
	(code 573)	1	2293 978				
	(code 575)	1	2272 861				
	(code 521)	1	2272 731	---- ---	2272 749		
	(code 522)	1	2274 347	---- ---	2274 354		
	(code 525)	1	2272 733	---- ---	2272 751		
	V1-L (codes 551, 554, 555)	1	---- ---	---- ---	2272 708		
	V1-P (code 581)	1	---- ---	---- ---	---- ---	2296 095	
	(code 582)	1	---- ---	---- ---	---- ---	2296 445	
	(code 583)	1	---- ---	---- ---	---- ---	2296 096	
	(code 585)	1	---- ---	---- ---	---- ---	2296 097	
23-109-36	COVER, Rear Seat Cushion						
	V1-L (codes 501, 504, 505)	1	2272 680				
	(code 564)	1	2274 280				
	(code 594)	1	2274 329				
	(codes 551, 554, 555)	1	---- ---	---- ---	2272 707		
	V1-H (code 571)	1	2272 858				
	(code 573)	1	2293 977				
	(code 575)	1	2272 859				
	(code 521)	1	2272 728	---- ---	2272 746		
	(code 522)	1	2274 346	---- ---	2274 353		
	(code 525)	1	2272 730	---- ---	2272 748		
	V1-P (code 581)	1	---- ---	---- ---	---- ---	2296 092	
	(code 582)	1	---- ---	---- ---	---- ---	2296 444	
	(code 583)	1	---- ---	---- ---	---- ---	2296 093	
	(code 585)	1	---- ---	---- ---	---- ---	2296 094	
23-109-38	RETAINER, Center Floor Pan Rear Cushion						
	V1	2	1810 037	---- ---	---- ---	1810 037	
23-113-50	WELT, Quarter Window Garnish Moulding to Lower Moulding						
	V1-L (2 D.) (gray)	2	2272 153				
23-113-52	STRIP, Windshield Lower Inside						
	(code 581)	1	---- ---	---- ---	---- ---	2297 304	
	(code 582)	1	---- ---	---- ---	---- ---	2297 305	
	(code 583)	1	---- ---	---- ---	---- ---	2297 306	
	(code 585)	1	---- ---	---- ---	---- ---	2297 307	
23-113-56	WEATHERCORD, Folding Top Header						
	V1-H, V1-P (white)	1	---- ---	---- ---	---- ---	⊟2432 958	
	(black)	1	---- ---	---- ---	---- ---	⊟2432 959	
23-113-87	WELT, Rear Quarter Trim Panel						
	V1-H (plastic)(ser. by the inch)						
	(codes 521, 551) (blue)	★	---- ---	---- ---	2297 050		
	(code 522) (green)	★	---- ---	---- ---	2297 053		
	(code 554) (gray)	★	---- ---	---- ---	2297 051		
	(codes 525, 555) (red)	★	---- ---	---- ---	2297 052		
	(flange cover)	★	*2292 592	---- ---	---- ---	2292 592	

★ Indicates use as required.
⊟ Indicates parts not listed in any previous parts book.
March 8, 1963 Supersedes May 1, 1962.

Printed in U.S.A.
Prices and specifications subject to change without notice.
Right and left part numbers are on same line, first number is right, second number is left.
* Indicates change or addition.

MyMopar.com

CODE	REMARKS	PER CAR	SED.	SP. 4 D.	SUB.	SP. CL. CP.	CV. CP.
23-114-2	MATERIAL, Seat Cloth Trim						
	V1-L (codes 501, 504, 505) (multicolor)	★	2185 340				
	V1-H (code 521) (blue)	★	2185 398	---- ---	2185 398		
	(code 522) (green)	★	2185 481	---- ---	2185 481		
	(code 525) (red)	★	2185 400	---- ---	2185 400		
	V1-L (codes 551, 554, 555)(gray)	★	---- ---	---- ---	2185 409		
23-114-15	MATERIAL, Leather (Imitation) Trim						
	V1-L, V1-H (codes 501, 521, 551, 571, 573)						
	(28A-AM-22)(54") (1511 gray)	★	2185 154				
	(28-AM-22) (54") (codes 521, 571) (1501-1 blue)	★	2185 141	---- ---	2185 141	2185 141	
	(34-DB-22) (54") (1501-1 blue)	★	2185 259	---- ---	2185 259	2185 259	
	(1504-1 cocoa)	★	2185 590				
	(32A-CH-22) (54") (codes 521, 571) (1500 blue)	★	2185 152	---- ---	2185 152	2185 152	
	(codes 501, 551)(1511 gray)	★	2185 154	---- ---	2185 154		
	V1-L, V1-H (28-AM-22) (54")						
	(code 501) (1508-1 gray)	★	2185 143	---- ---	2185 143		
	(codes 521, 571)(1501-1 blue)	★	2185 254	---- ---	2185 254		
	(32-DG-22) (53") (1508-1 gray)	★	2185 360				
	(21A-CM-22)(54") (1500 blue)	★	2185 372	---- ---	2185 372	2185 372	
	(21-CM-22) (54")(1501-1 blue)	★	2185 410	---- ---	2185 410		
	(21-CM-22) (54") (1501-1 blue)	★	2185 354	---- ---	2185 354	2185 354	
	V1-H (code 522)						
	(28-AM-22) (54")(1506-a green)	★	2185 163	---- ---	2185 163		
	(34-DB-22) (54")(1506-1 green)	★	2185 485	---- ---	2185 485		
	(28A-AM-22)(54") (1515 green)	★	2185 187	---- ---	2185 187		
	(21A-CM-22)(54") (1515 green)	★	2185 385	---- ---	2185 385		
	(21-CM-22) (54")(1506-1 green)	★	2185 361	---- ---	2185 361		
	V1-L (codes 504, 554, 564, 594)						
	(28A-AM-22)(54") (1511 gray)	★	2185 154	---- ---	2185 154		
	(28-AM-22) (54") (1508-1 gray)	★	2185 143				
	(32-CH-22) (code 594)(902 gray)	★	2185 336				
	(34-DB-22) (54") (1508-1 gray)	★	2185 260	---- ---	2185 260		
	(28A-AM-22)(54") (1508 gray)	★	2185 154				
	(28-AM-22) (code 564) (1508-1 gray)	★	2185 143				
	(28A-AM-22)(code 564)(1511 gray)	★	2185 154				
	(code 594) (902 gray)	★	2185 336				
	(32-DG-22) (53") (1508-1 gray)	★	2185 360				
	(21-BE-67) (54") (1508-1 gray)	★	2185 410	---- ---	2185 410		
	(19-CT-22) (54") (902 gray)	★	2185 074				
	V1-L, V1-H (codes 505, 525, 555, 575)						
	(28A-AM-22)(54") (1511 gray)	★	2185 154	---- ---	2185 154		
	(28-AM-22) (54") (1508-1 gray)	★	2185 143				
	(codes 525, 575)(1509 red)	★	2185 150	---- ---	2185 150	2185 150	
	(34-DB-22) (54") (1509 red)	★	2185 261	---- ---	2185 261	2185 261	
	(28A-AM-22)(54") (1511 gray)	★	2185 154				
	(28-AM-22) (54") (1508-1 gray)	★	2185 143	---- ---	2185 143		
	(28A-AM-22)(code 525)(1509 red)	★	2185 150	---- ---	2185 150	2185 150	
	(21-BE-67) (54") (1508-1 gray)	★	2185 410	---- ---	2185 410		
	(21A-CM-22)(54") (1511 gray)	★	2185 374	---- ---	2185 374	2185 374	
	(21-CM-22) (54") (1509 red)	★	2185 371				

★ Indicates use as required.
⊟ Indicates parts not listed in any previous parts book.
Right and left part numbers are on same line, first number is right, second number is left.
* Indicates change or addition.

Printed in U.S.A.
Prices and specifications subject to change without notice.
May 1, 1962 Supersedes Nov. 30, 1961.

MyMopar.com

CODE	REMARKS	PER CAR	SED.	SP. 4 D.	SUB.	SP. CL. CP.	CV. CP.
23-114-15	MATERIAL, Leather (Imitation) Trim - Cont'd						
	V1-P (codes 581, 582, 583, 585)						
	(18-AR-22) (54") (1501-1 blue)	★	---- ---	---- ---	---- ---	2186 063	
	(1506-1 green)	★	---- ---	---- ---	---- ---	2186 064	
	(1504-1 cocoa)	★	---- ---	---- ---	---- ---	2186 065	
	(1509 red)	★	---- ---	---- ---	---- ---	2186 066	
	(28-AM-22) (50") (1501-1 blue)	★	---- ---	---- ---	---- ---	2185 141	
	(code 582) (1506-1 green)	★	---- ---	---- ---	---- ---	2185 163	
	(code 583) (1504-1 cocoa)	★	---- ---	---- ---	---- ---	2185 142	
	(code 585) (1509 red)	★	---- ---	---- ---	---- ---	2185 150	
	(32-CH-22) (54") (1501-1 blue)	★	---- ---	---- ---	---- ---	2185 254	
	(code 582) (1506-1 green)	★	---- ---	---- ---	---- ---	2185 163	
	(28-AM-22) (code 583)						
	(1504-1 cocoa)	★	---- ---	---- ---	---- ---	2185 142	
	(code 585) (1509 red)	★	---- ---	---- ---	---- ---	2185 150	
	(19-C-22) (54") (1501-1 blue)	★	---- ---	---- ---	---- ---	2185 147	
	(code 582) (1506-1 green)	★	---- ---	---- ---	---- ---	2185 167	
	(code 583) (1504-1 cocoa)	★	---- ---	---- ---	---- ---	2185 148	
	(code 585) (1509 red)	★	---- ---	---- ---	---- ---	2185 151	
	(21-CM-22) (54") (1501-1 blue)	★	---- ---	---- ---	---- ---	2185 354	
	(code 582) (1506-1 green)	★	---- ---	---- ---	---- ---	2185 361	
	(code 583) (1504-1 cocoa)	★	---- ---	---- ---	---- ---	2185 355	
	(code 585) (1509 red)	★	---- ---	---- ---	---- ---	2185 371	
23-115-4	NUT, Front Seat Cushion to Back Mounting						
	V1-P (up to serial No. 27-15868)	4	---- ---	---- ---	---- ---	*1918 296	*1918 296
	(push nut) (after)	4	---- ---	---- ---	---- ---	*2410 102	*2410 102
	V1 (2 D.)	2	*2160 648				
23-115-6	SCREW, Front Seat Cushion to Back Mounting						
	V1-P (up to serial No. 27-15868)	4	---- ---	---- ---	---- ---	*1918 587	*1918 587
	(pin) (after)	4	---- ---	---- ---	---- ---	*2410 054	*2410 054

NOTES

★ Indicates use as required.
⊟ Indicates parts not listed in any previous parts book.
March 8, 1963 Supersedes May 1, 1962.

Printed in U.S.A.
Prices and specifications subject to change without notice.
Right and left part numbers are on same line, first number is right, second number is left.
* Indicates change or addition.

MyMopar.com

GROUP 24 - AIR CONDITIONING

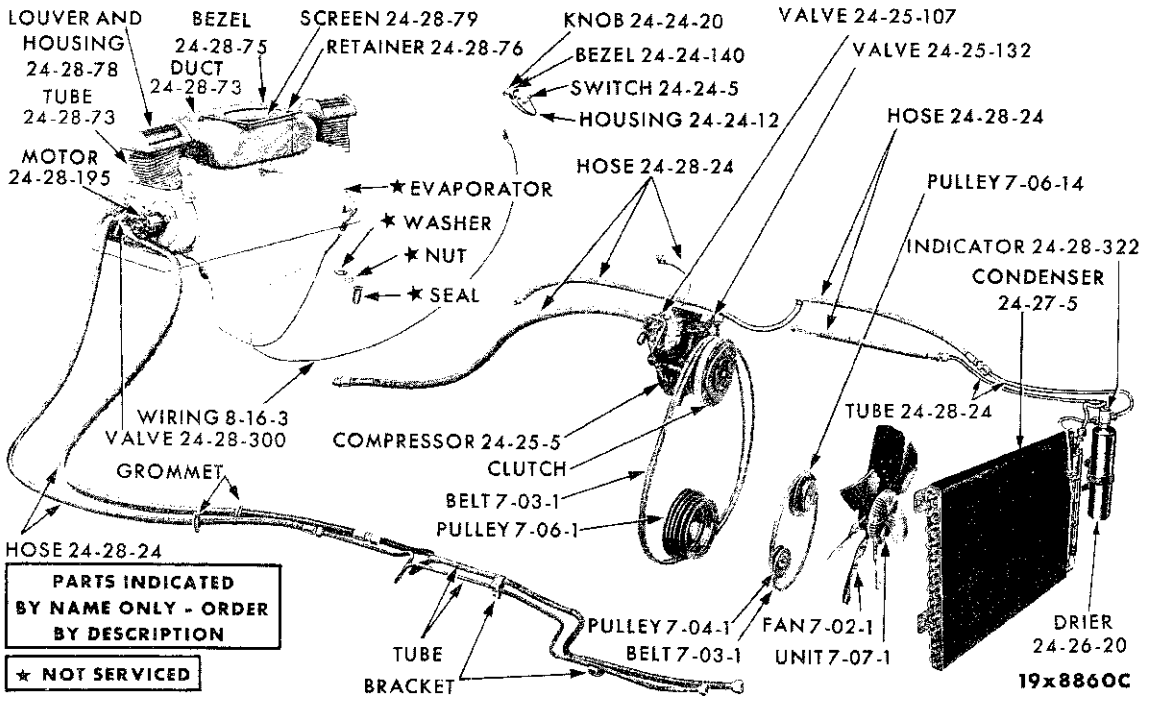

AIR CONDITIONING SYSTEM - TRUNK TYPE

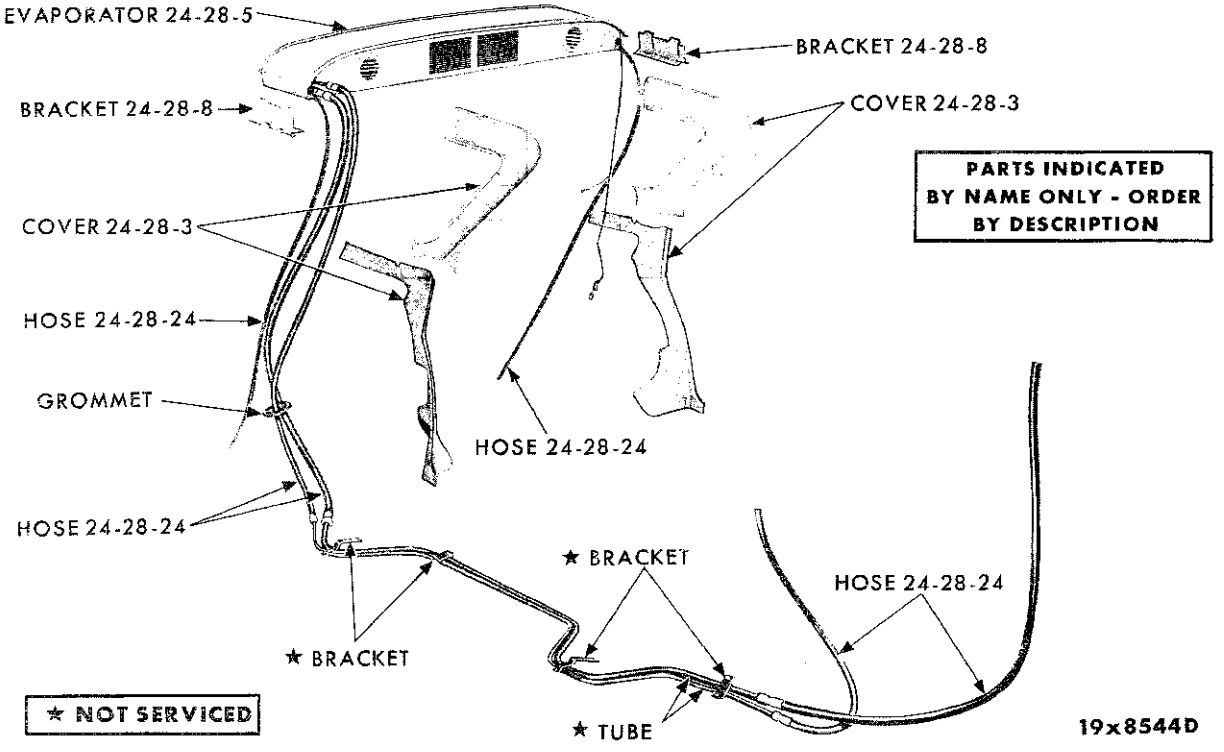

AIR CONDITIONING SYSTEM - SUBURBAN

MyMopar.com

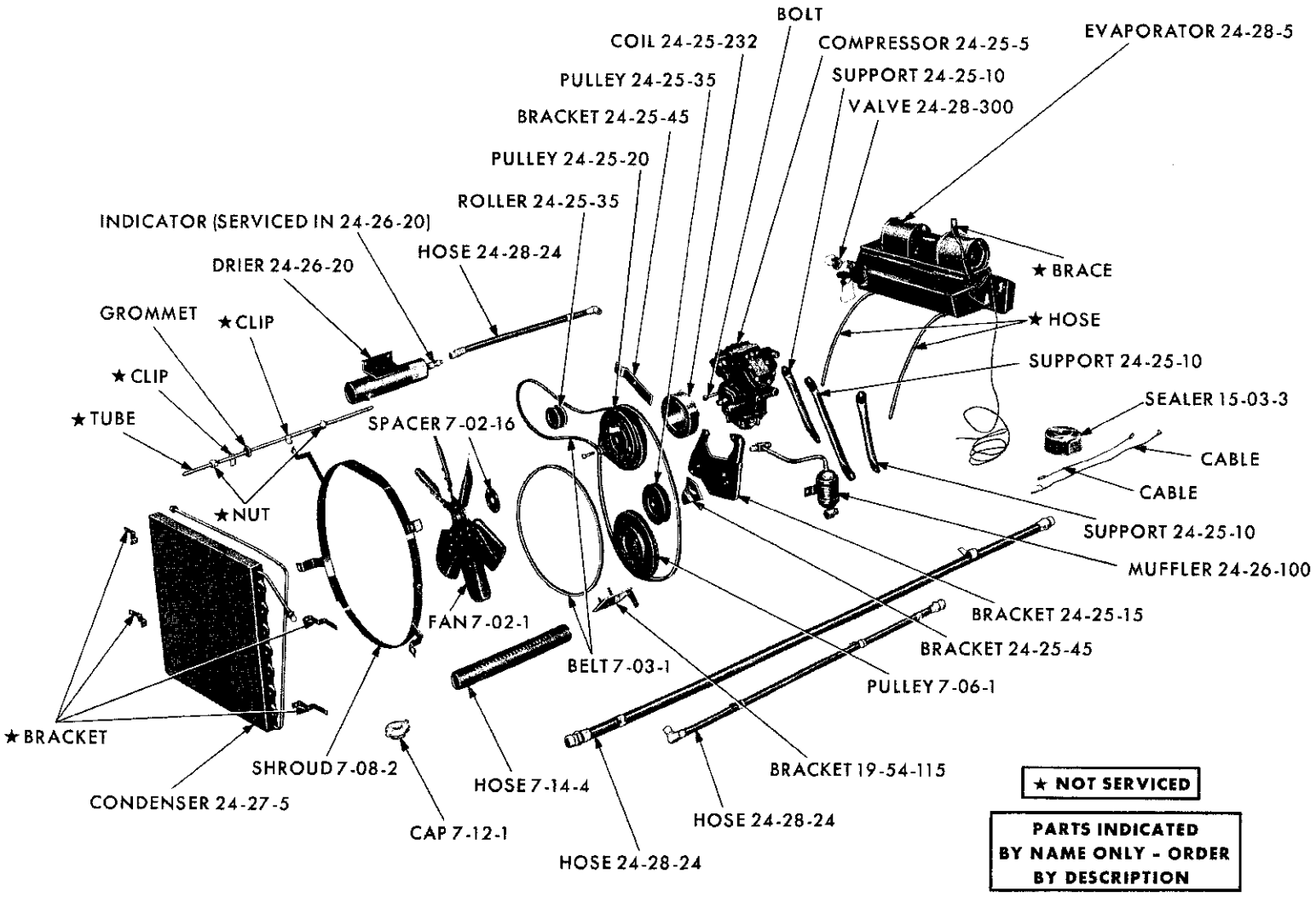

AIR CONDITIONING SYSTEM (6 CYLINDER) - VALIANT SV1 AND LANCER SL1 (MOPAR MODEL "G")

MyMopar.com

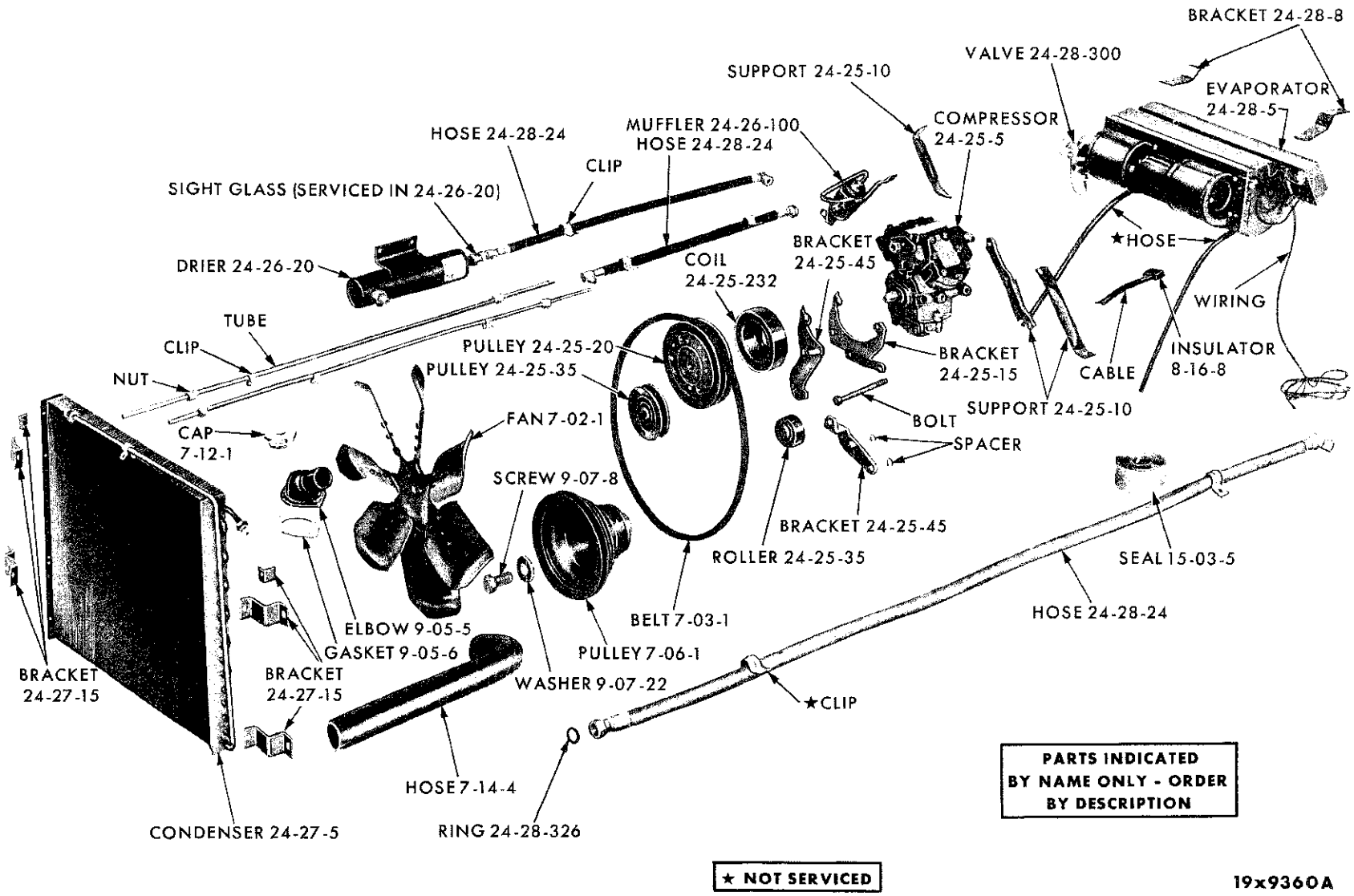

AIR CONDITIONING SYSTEM (V8 CYLINDER) - PLYMOUTH SP1-2 AND DODGE SD1-2 (MOPAR MODEL "G")

MyMopar.com

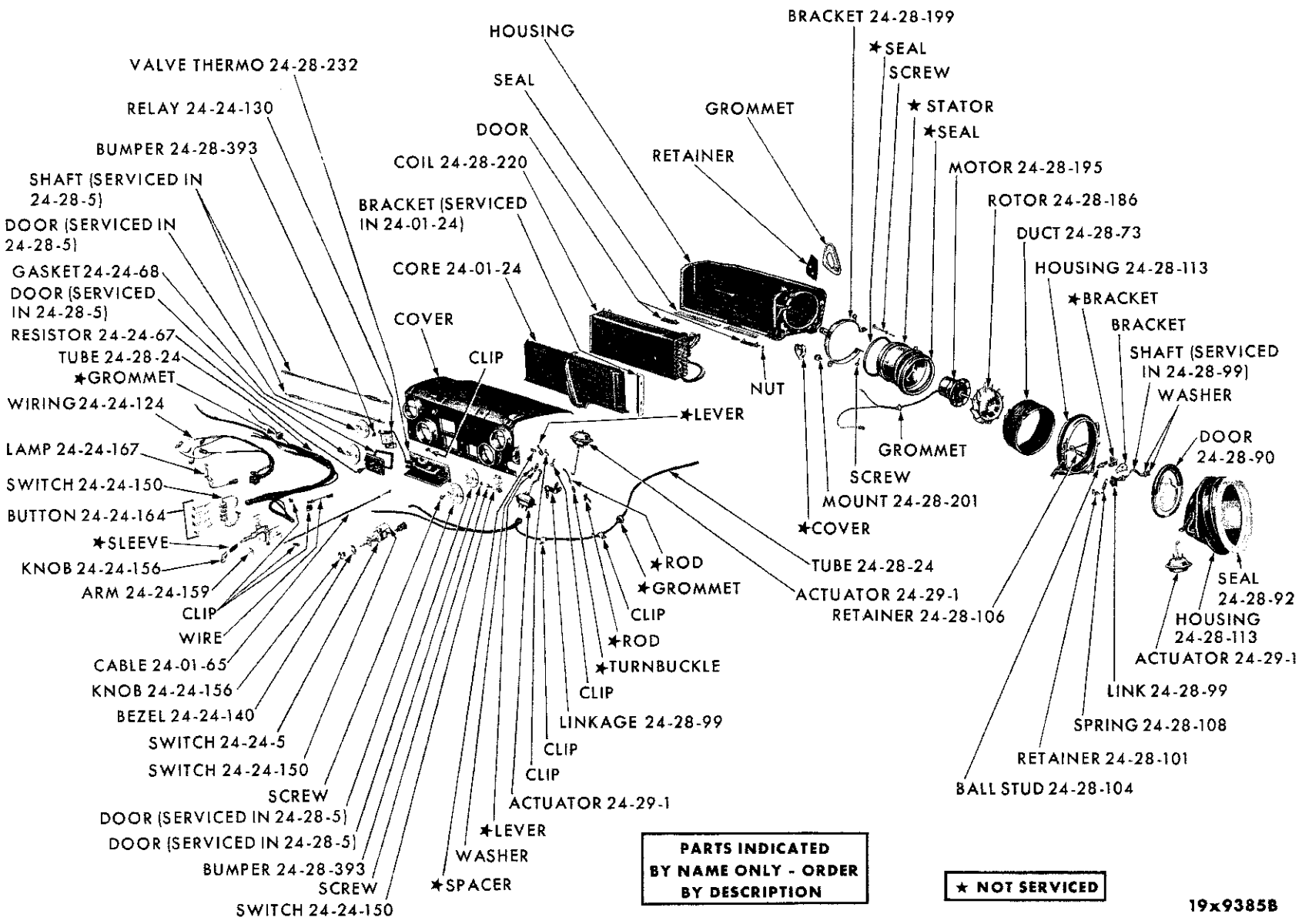

AIR CONDITIONING SYSTEM (COWL TYPE) - PLYMOUTH SP1-2 AND DART SD1-2

MyMopar.com

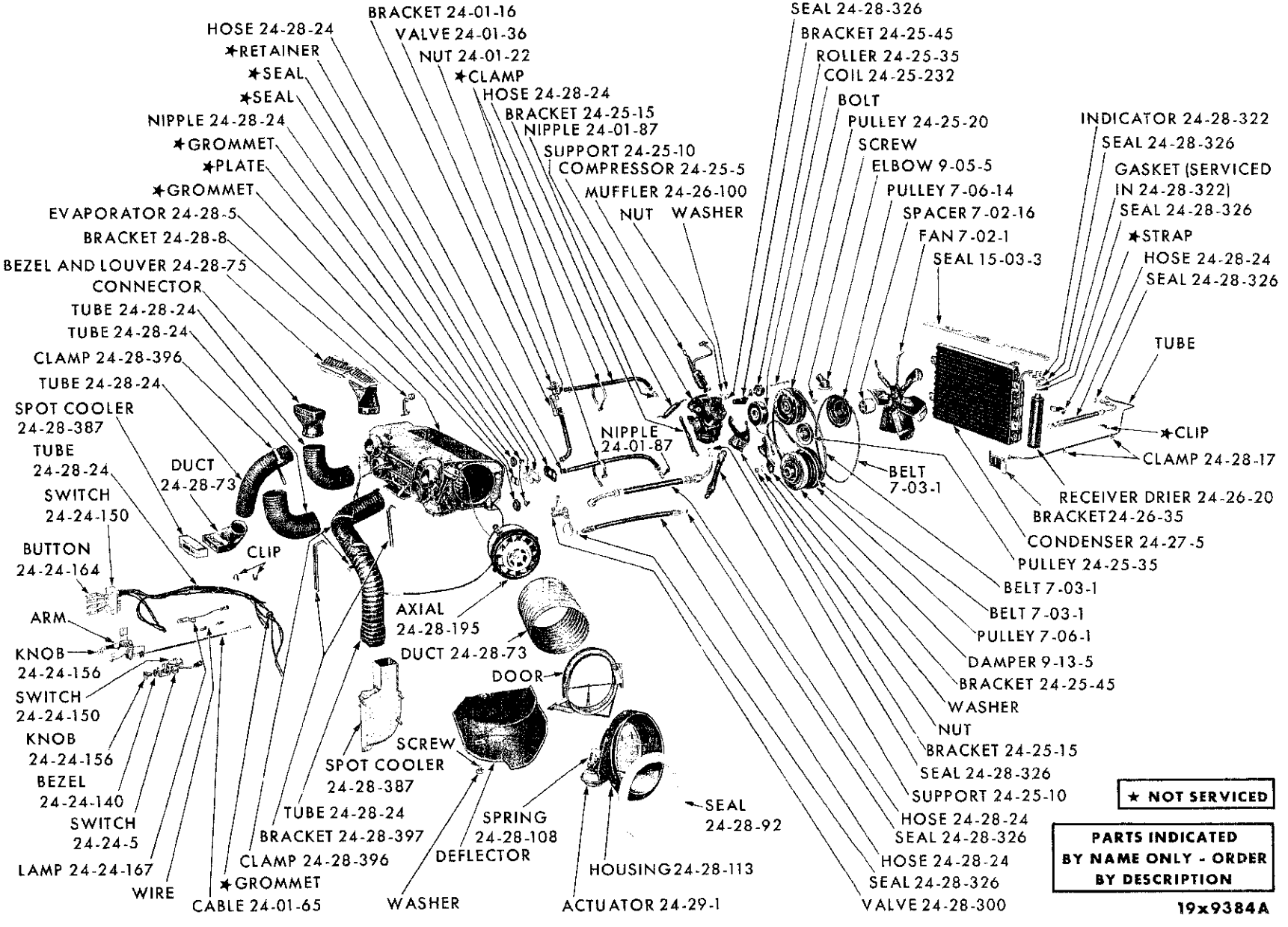

AIR CONDITIONING SYSTEM - PLYMOUTH SP1-2 AND DART SD1-2

MyMopar.com

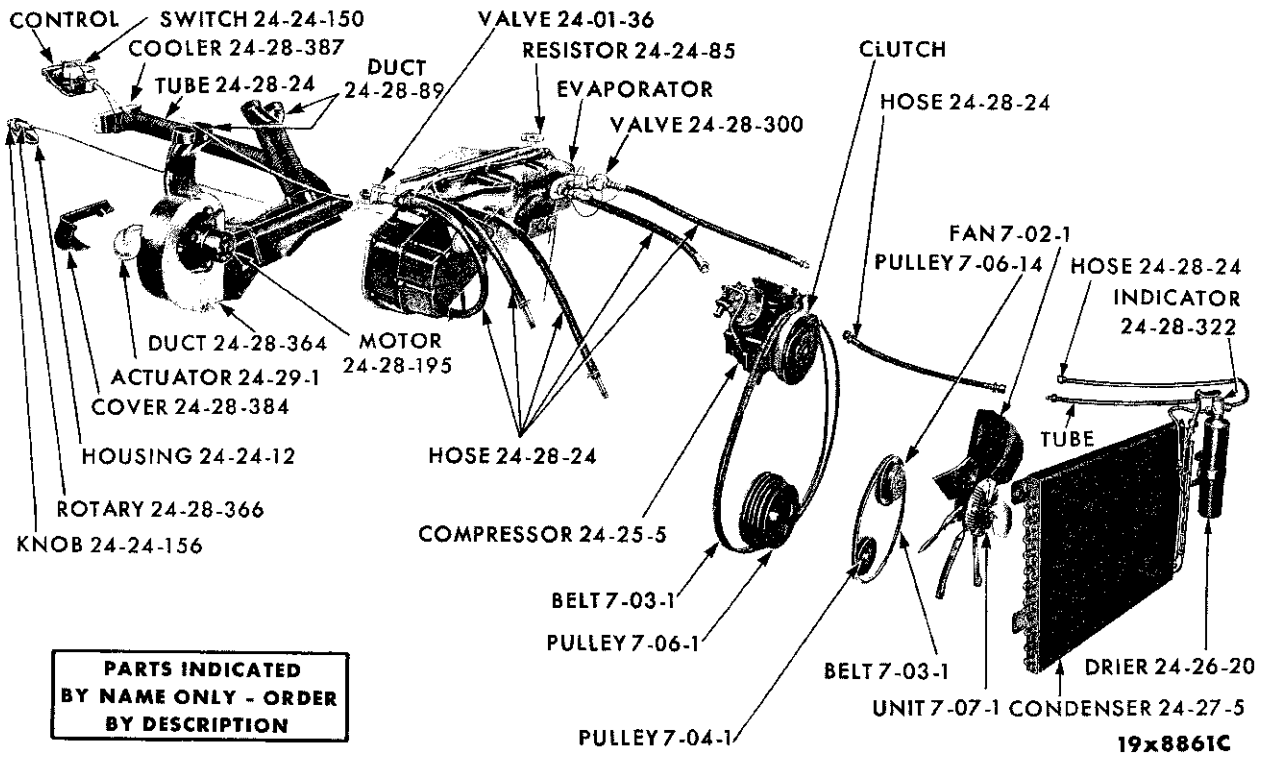

AIR CONDITIONING SYSTEM - CHRYSLER SC1-2-3 AND IMPERIAL SY1

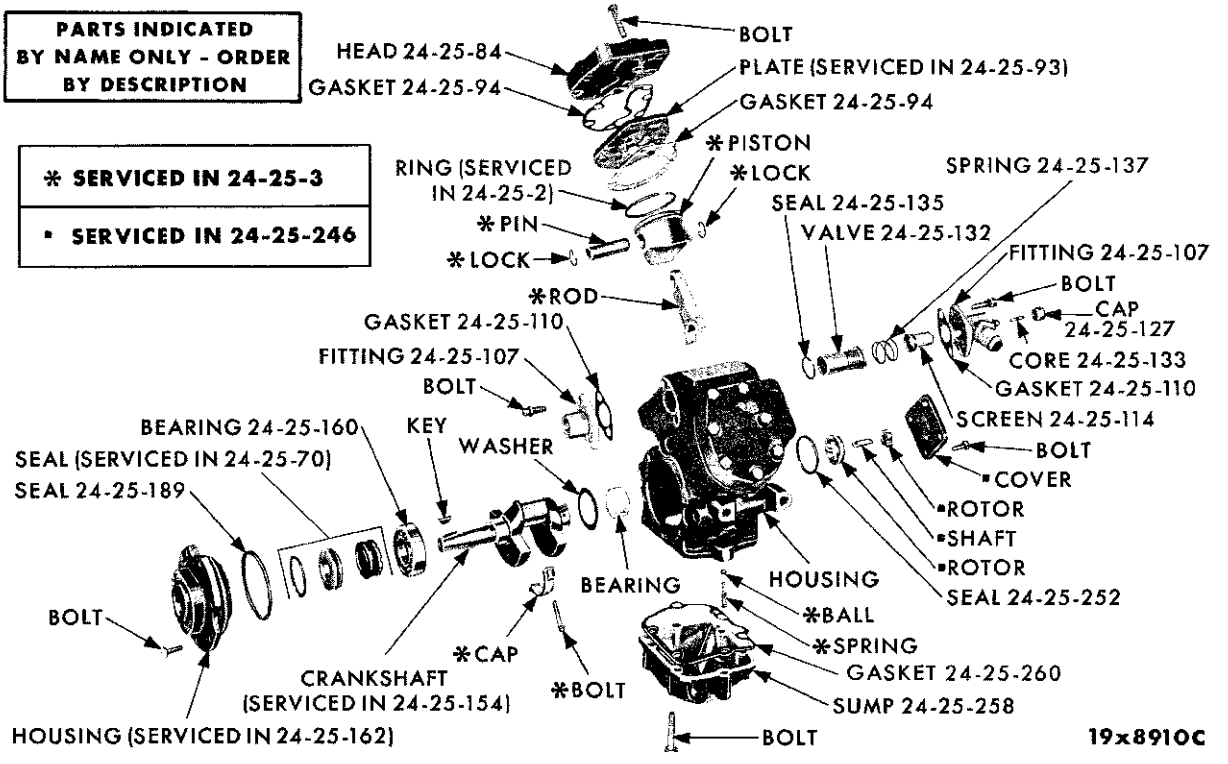

AIR CONDITIONING COMPRESSOR

MyMopar.com

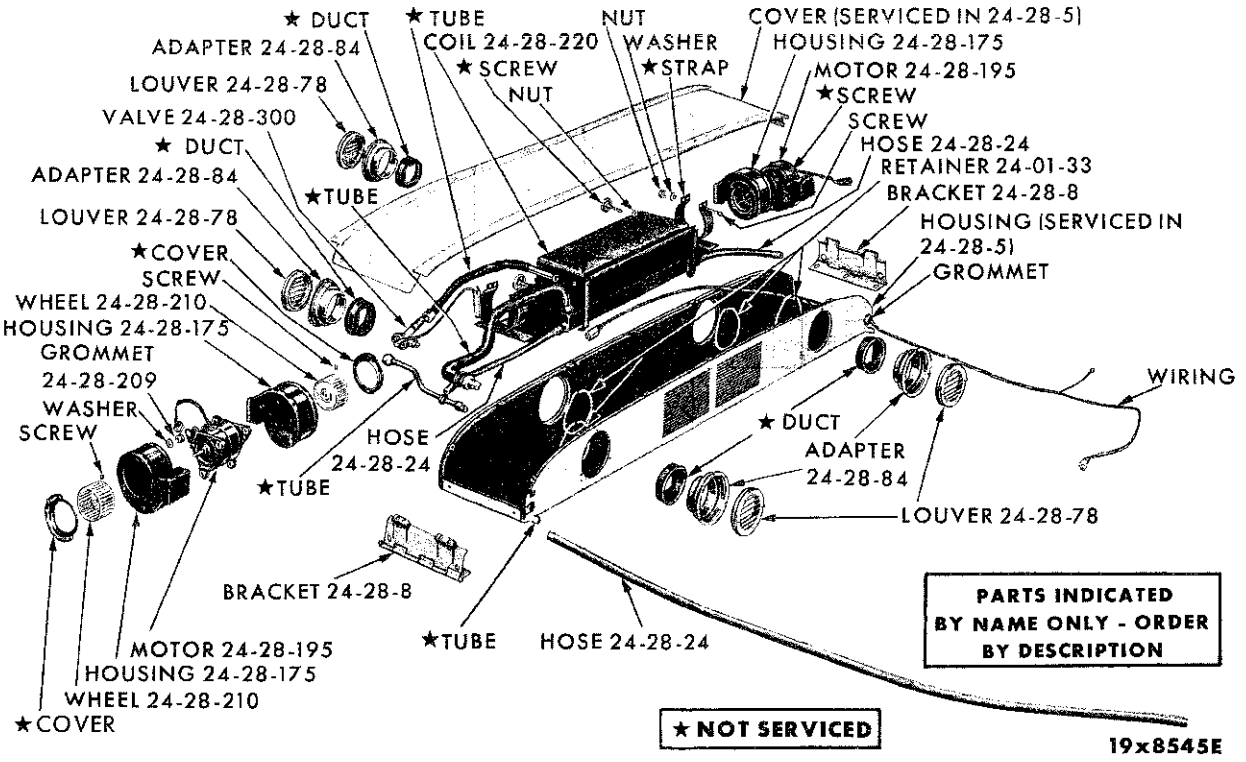

AIR CONDITIONING EVAPORATOR - SUBURBAN

NOTES

MyMopar.com

CODE	PART NAME AND DESCRIPTION	CYL.	PER CAR	VALIANT LANCER	PLYMOUTH DODGE	CHRYSLER IMPERIAL

NOTES

★ Indicates use as required.
B Indicates parts not listed in any previous parts book.
May 1, 1962.

Printed in U.S.A.
Prices and specifications subject to change without notice.

MyMopar.com

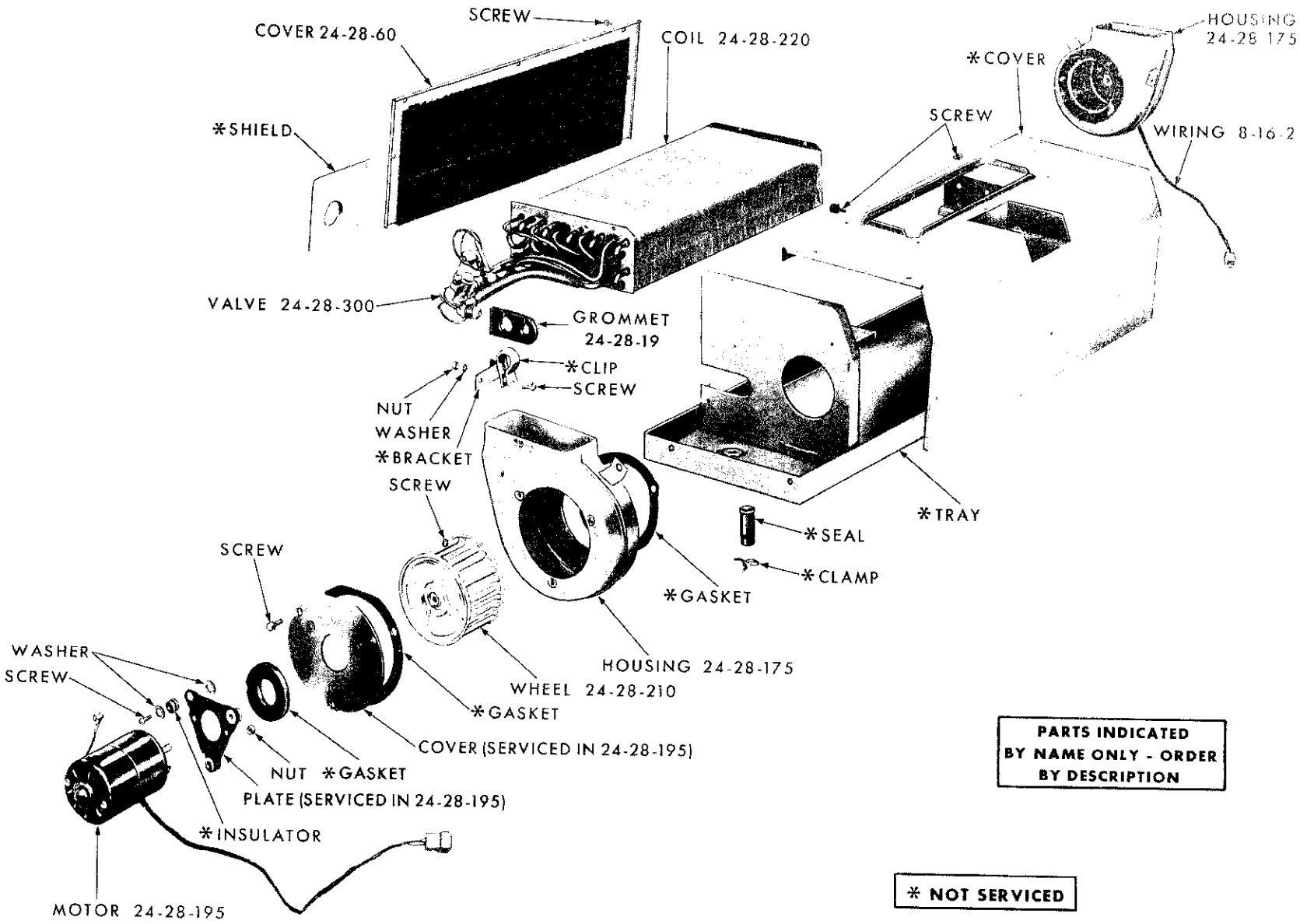

AIR CONDITIONING EVAPORATOR - TRUNK TYPE

MyMopar.com

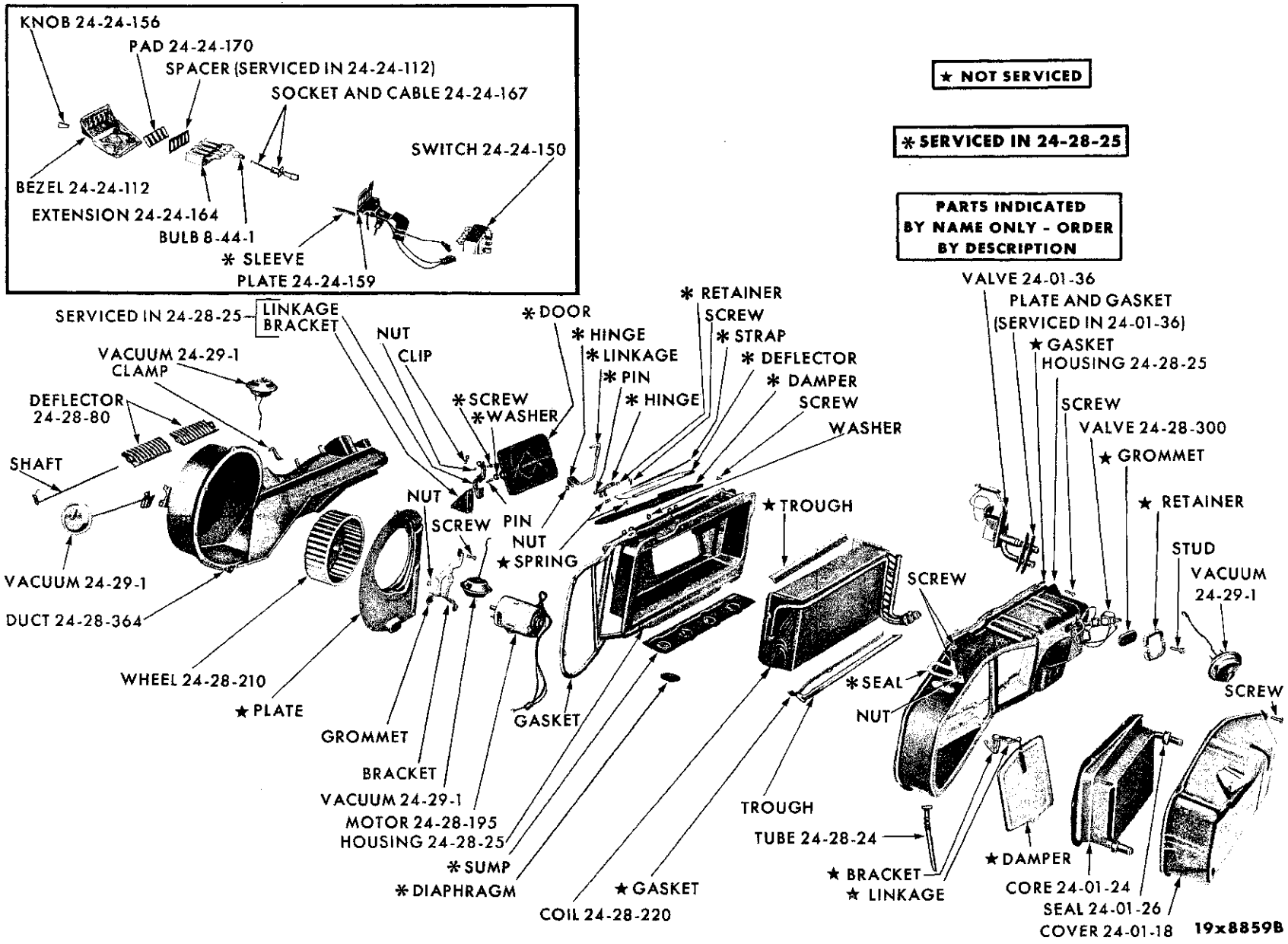

AIR CONDITIONING EVAPORATOR - COWL TYPE

MyMopar.com

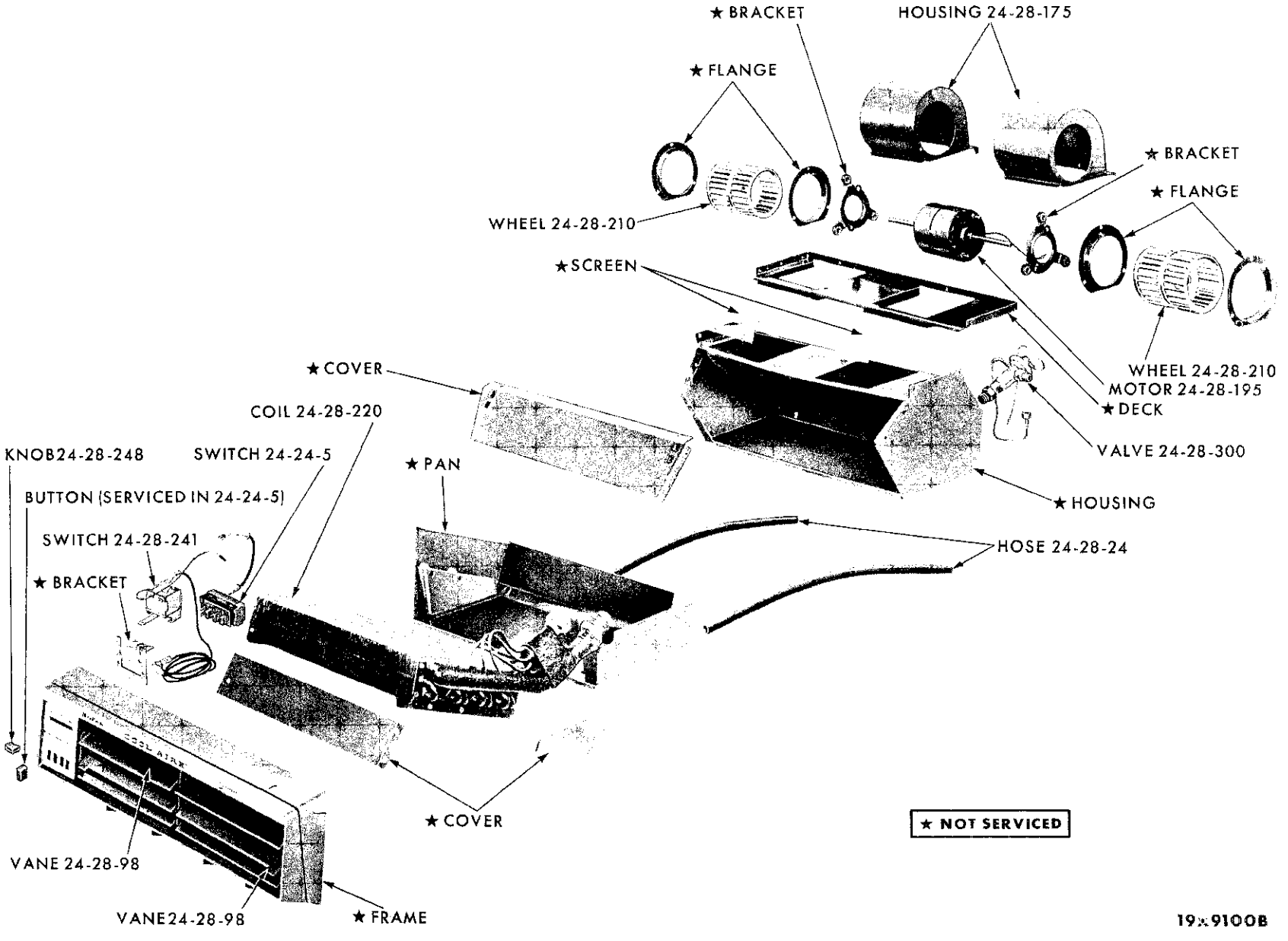

AIR CONDITIONING EVAPORATOR - MOPAR MODEL "G"

MyMopar.com

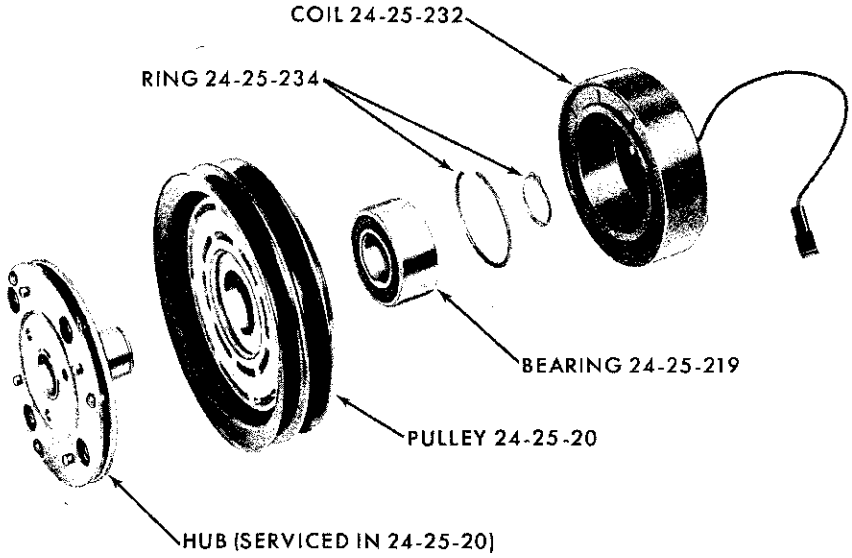

19x9359

AIR CONDITIONING CLUTCH (6 CYLINDER) - EXCEPT CHRYSLER SC1-2-3 AND IMPERIAL SY1

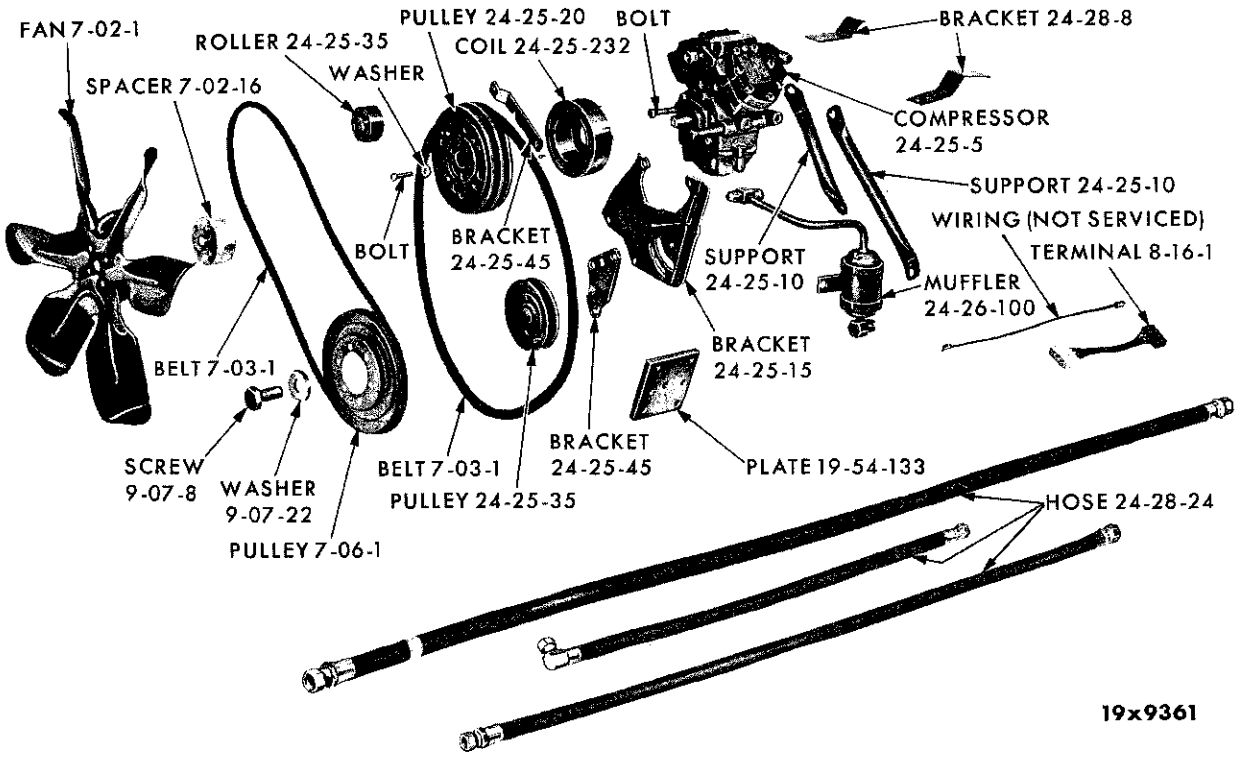

19x9361

AIR CONDITIONING ADAPTER PACKAGE (225 CU. IN.) - PLYMOUTH SP1-2 AND DODGE SD1-2

MyMopar.com

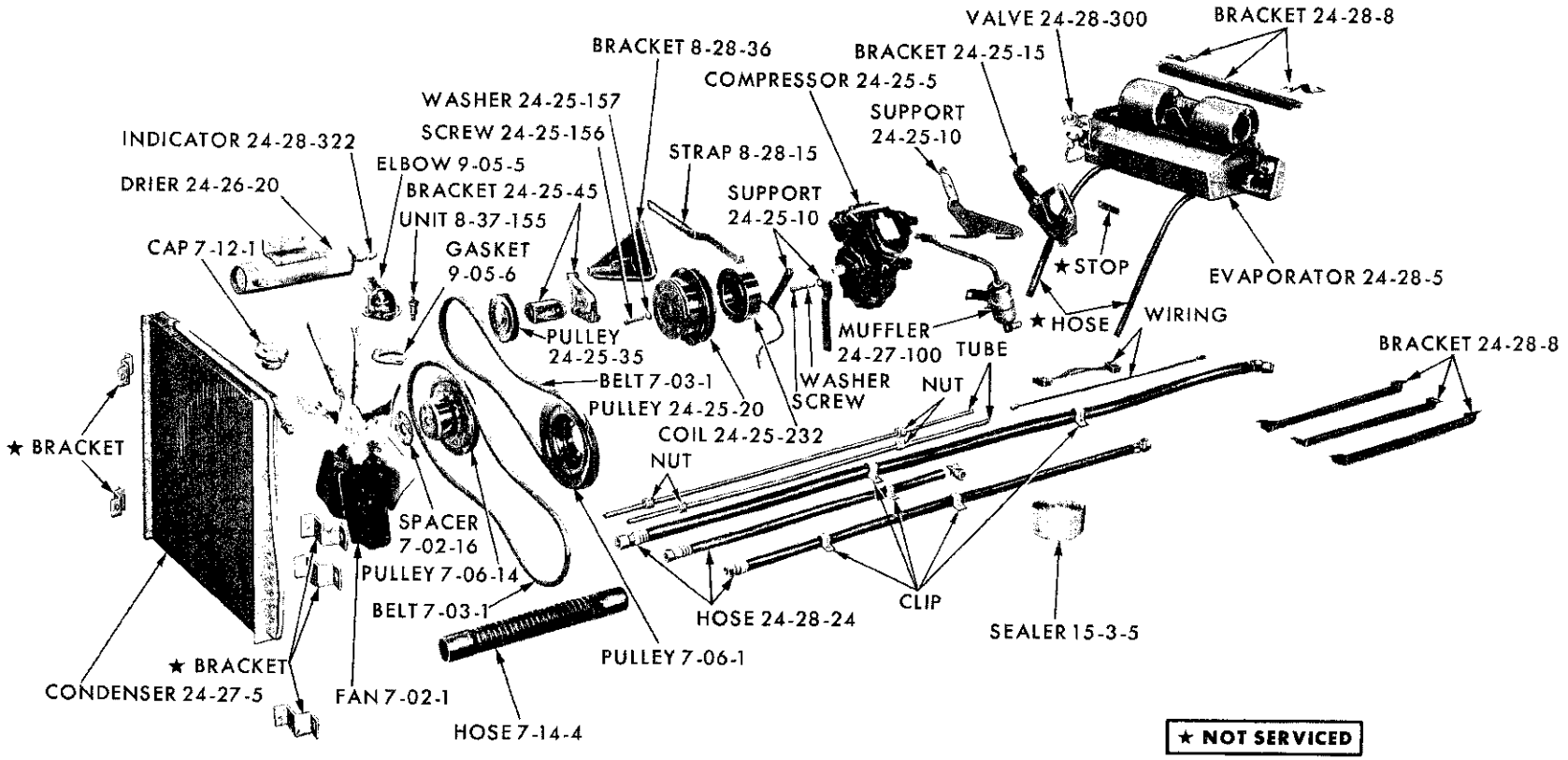

AIR CONDITIONING SYSTEM - MOPAR MODEL "G"

MyMopar.com

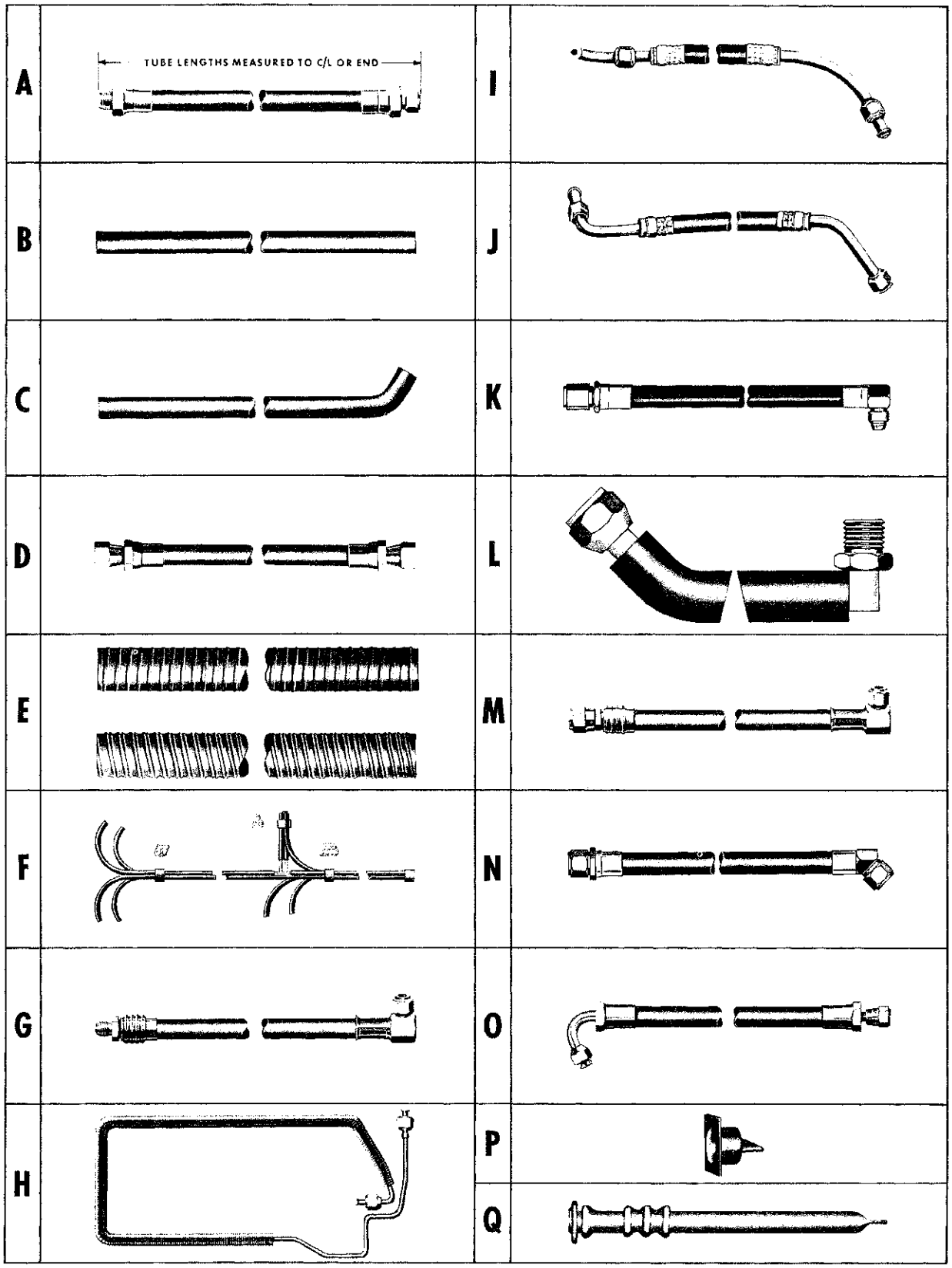

19L9147B

AIR CONDITIONING HOSE CHART

MyMopar.com

AIR CONDITIONING HOSE CHART

TYPE	PART NUMBER	LENGTH	HOSE OUTSIDE DIA.	THREAD DIAMETER	LOCATION
A	1658 029	38 in.	3/4 in.	5/8-18	SY1, Rear Expansion Valve to Underbody Liquid Tube
	1704 447	94 in.	1 in.	7/8-14	SD3, SC1, Sub. Suction, Rear Unit to Underbody Tube
	1887 254	68 1/2 in.	1 in.	7/8-14	SD3, SC2, SC3, Suction, Rear Unit to Underbody Tube (w/Dual Unit)
	1887 254	68 1/2 in.	1 in.	7/8-14	SY1, Suction, Tee to Underbody Tube (w/Dual Unit)
	2097 052	80 in.	3/4 in.	5/8-18	SC1, SC2, SC3, Rear Expansion Valve to Underbody Liquid Tube
	2097 057	30 in.	1 in.	7/8-14	SY1, Suction, Rear Unit to Underbody Tube (w/Dual Unit)
	2219 127	18 7/8 in.	3/4 in.	3/4-16	SD3, SC1, SC2, SC3, SY1, All, Discharge, Muffler to Condenser Tube
	2219 174	20 in.	3/4 in.	3/4-16	SD3, SC1, SC2, SC3, SY1, Expansion Valve to Liquid Tube
	2277 158	53 in.	1 in.	7/8-14	SD3, SC1, Sub., Suction, Front Tee to Underbody Tube (w/Dual Unit)
	2277 158	53 in.	1 in.	7/8-14	SC2, SC3, Suction, Front Tee to Underbody Tube (w/Dual Unit)
	2277 158	53 in.	1 in.	7/8-14	SC3, Sub. Suction, Tee to Underbody Tube (w/Dual Unit)
	2277 431	23 in.	7/8 in.	3/4-16	SP1, SD1, Discharge, Muffler to Condenser Tube
	2277 431	23 in.	7/8 in.	3/4-16	SP2, SD2, Discharge, Muffler to Condenser Tube w/318 Cu.In.Eng.
	2277 646	19 in.	3/4 in.	5/8-18	SP1, SD1, w/225 Cu.In.Eng., SP2, SD2, w/318 and 361 Cu.In.Eng., Expansion Valve to Liquid Tube
B	1315 466	---	1 in.	---	SP, SD, SC, SY, All Valve to Heater, Heater to Pump (50 Foot Roll)
	2097 131	62 in.	5/8 in.	---	SC1, SC3, Evaporator Drain, Sub.
	2219 706	---	5/8 in.	---	SV1, SL1, Evaporator Drain, Model "G"
	2277 506	10 in.	9/16 in.	---	SP1, SP2, SD1, SD2, Control Tube Vacuum Connector to Thermo
	2405 200	18 in.	9/16 in.	---	SP1, SP2, SD1, SD2, Control Vacuum to Connector
C	1595 160	29 in.	1 in.	---	SD3, SP, SD, SC, SY All, Eng. to Valve (Formed)
	1779 885	12 in.	1 in.	---	SP1, SP2, SD1, SD2, Valve to Heater
	2096 932	46 in.	1 in.	---	SP2, SD2, Core to Pump
	2277 425	50 in.	1 in.	---	SP1, SD1, Core to Pump, w/225 Cu.In.Eng.
D	1998 625	---	---	---	SV1, SL1, SP1, SD1, Suction, Evaporator to Compressor (Model "G")
	2003 761	10 in.	1/2 in.	3/4-16	SP1, SP2, SD1, SD2, SC1, SC2, SC3, SY1, Discharge, Muffler to Condenser (Model "G")
	2006 357	---	---	---	SC2, SC3, SY1, Suction, Evaporator to Compressor (w/Model "G")
	2096 835	23 in.	1 in.	7/8-14	SC1, SC2, SY1, Suction Evaporator to Compressor (w/361 Cu.In.Eng.)
	2096 835	23 in.	1 in.	7/8-14	SD3, SC1, SC2, SY1, Sub., Suction, Front Unit to Tee (w/Dual Unit)
	2096 835	23 in.	1 in.	7/8-14	SD3, SC2, SC3, Suction Compressor to Tee (w/Dual Unit)
E	1658 630	33 in.	3 in.	---	SP1, SP2, SD1, SD3, Distribution Duct to Spot Cooler, Left
	1689 313	52 in.	2 1/4 in.	---	SD3, SC1, SC2, SC3, SY1, Distribution Duct to Spot Cooler
	2197 020	18 in.	3 1/4 in.	---	SC1, SC2, SC3, Distribution Duct to Air Outlet Duct, Left
	2277 415	36 in.	3 in.	---	SP1, SP2, SD1, SD2, Distribution Duct to Spot Cooler, Right
	2277 507	13 in.	3 1/2 in.	---	SP1, SP2, SD1, SD2, Air Outlet
	2279 917	12 1/4 in.	3 1/4 in.	---	SY1, Air Outlet Includes Connector
F	2257 198	---	1/4 in.	---	SD3, SC1, SC2, SC3, SY1, Control, w/Tee and Connector
	2277 228	---	1/4 in.	---	SP1, SD1, SP2, SD2, Vacuum Selector Switch (3 Tubes)
	2426 139	---	1/4 in.	---	SP1, SP2, SD1, SD2, Control, w/Tee and Connector (7 Tubes)
G	2219 214	42 in.	3/4 in.	5/8-18	SD3, SC1, SC2, SC3, Liquid, Front Tee to Underbody Tube
	2219 406	51 in.	3/4 in.	---	SY1, Liquid, Front Tee to Underbody Tube
H	2219 302	---	---	---	SC3, SY1, Liquid, Receiver Drier to Liquid Hose (w/Fins)
I	2277 331	18 1/8 in.	1 5/16 in.	7/8-14	SP2, SD2, Suction Evaporator to Compressor, w/318 Cu.In.Eng.
J	2277 429	33 9/16 in.	1 1/4 in.	7/8-14	SP1, SD1, Suction, Evaporator to Compressor
	2277 429	33 9/16 in.	1 1/4 in.	7/8-14	SP2, SD2, Suction, Evaporator to Compressor (w/361 Cu.In.Eng.)
K	2004 792	21 in.	3/8 in.	5/8-18	SP2, SD2, Discharge, Muffler to Condenser, w/Model "G"
L	2277 665	5 in.	---	---	SP1, SD1, Expansion Valve to Unit (w/Insulation)
M	1887 627	20 in.	3/8 in.	3/4-16	SV1, SL1, Liquid (Model "G")
	2004 759	37 in.	3/8 in.	5/8-18	SV1, SL1, Discharge, Muffler to Condenser (Model "G")
	2006 358	28 in.	3/8 in.	5/8-18	SP1, SP2, SD1, SD2, Liquid, Expansion Valve to Liquid Tube, w/Model "G"
N	2004 790	70 in.	5/8 in.	7/8-14	SP2, SD2, SC1, SC2, Suction, Evaporator to Compressor, w/Model "G"
O	2277 374	18 7/8 in.	3/4 in.	3/4-16	SP2, SD2, Discharge, Muffler to Condenser (w/318 Cu.In.Eng.)
P	2277 470	3/4 in.	3/4 in.	---	SP1, SP2, SD1, SD2, Evaporator Drain
Q	1971 913	6 3/4 in.	1/2 in.	---	SD3, SC1, SC2, SY1, Evaporator Drain

MyMopar.com

CODE	PART NAME AND DESCRIPTION	CYL.	PER CAR	VALIANT LANCER	PLYMOUTH DODGE	CHRYSLER IMPERIAL

NOTES

MyMopar.com

CODE	PART NAME AND DESCRIPTION	CYL.	PER CAR	VALIANT LANCER	PLYMOUTH DODGE	CHRYSLER IMPERIAL
24-01-0	**AIR CONDITIONING**					
24-01-1	AIR CONDITIONING PACKAGE, Common, Model G		1	---- ---	2298 796	
24-01-5	AIR CONDITIONING ADAPTER PACKAGE, Model G	6	1	---- ---	2298 797	
	w/413 cu. in. Eng.	8	1	---- ---	---- ---	2298 850
24-01-6	CONVERSION PACKAGE, Model G for R Series	8	1	---- ---	2299 318	
24-01-16	BRACKET, Water Valve Mtg., except SD3		1	---- ---	2277 207	
24-01-18	COVER, Heater Core, SD3	8	1	---- ---	2097 373	2097 373
24-01-22	NUT, Water Valve Bracket, except SD3		1	---- ---	2277 216	
24-01-24	CORE, Heater		1	---- ---	2277 193	1879 904
	SD3	8	1	---- ---	1879 904	
24-01-26	SEAL, Heater Core Tube, SD3		2	---- ---	*1604 116	*1604 116
24-01-33	RETAINER, Air Outlet Louver and Frame, Frt. Unit, SD3	8	4	---- ---	2197 896	2197 896
	Roof Unit, Sub.	8	4	---- ---	---- ---	1689 670
24-01-36	VALVE, Water, except SD3		1	---- ---	2277 123	
	VALVE, Temperature Control, SD3, SC1, SC2, SC3	8	1	---- ---	1972 779	1972 779
	SY1	8	1	---- ---	---- ---	1972 781
24-01-62	NOZZLE, Defroster, SD3	8	1	---- ---	*1971 693	
24-01-65	CABLE, Temperature Control, except SD3		1	---- ---	2291 605	⊟2291 604
	SD3	8	1	---- ---	⊟2291 604	
24-24-0	**CONTROL**					
24-24-5	SWITCH, Blower, Electrical Rotary, except SD3		1	---- ---	2256 478	
	SD3, SY1 Temperature Control Blower	8	1	---- ---	*2097 970	*2097 970
	Rear Unit, except SY1	8	1	---- ---	---- ---	2084 450
	SY1	8	1	---- ---	---- ---	2197 407
	Rear Unit, Sub.	8	1	---- ---	---- ---	1881 937
	STUD, Blower Switch Housing, except SY1	8	2	---- ---	---- ---	6010 020
	SWITCH, Blower, Model G		1	1998 598	1998 598	1998 598
24-24-8	NUT, Blower Motor Switch, Roof Unit, Sub.		1	---- ---	1971 521	1971 521
24-24-10	CAM, Vacuum Switch Control, except SD3		1	---- ---	*2258 093	
24-24-12	HOUSING, Blower Switch Rear Unit, also Floor Damper Control, SD3	8	★	---- ---	2291 149	2291 149
24-24-13	NAME PLATE, Blower Switch, Rear Unit, SY1	8	1	---- ---	---- ---	2197 509
24-24-20	KNOB, Blower Switch, SP1, SP2		1	---- ---	2256 479	
	SD1, SD2		1	---- ---	2256 483	
	Rear Unit, except SY1	8	1	---- ---	---- ---	2257 955
24-24-23	PACKAGE, Blower Switch Adapter, SD3, SY1	8	1	---- ---	2196 336	2196 336
24-24-27	COVER, Floor Air Control Switch Mtg. Hole, SY1	8	1	---- ---	---- ---	2198 082
24-24-29	DECAL, Blower Switch, SP1, SP2		1	---- ---	2258 263	
	SD1, SD2		1	---- ---	2258 625	

★ Indicates use as required.
⊟ Indicates parts not listed in any previous parts book.
* Indicates change or addition.

Printed in U.S.A.
Prices and specifications subject to change without notice.
March 8, 1963 Supersedes May 1, 1962

MyMopar.com

CODE	PART NAME AND DESCRIPTION	CYL.	PER CAR	VALIANT LANCER	PLYMOUTH DODGE	CHRYSLER IMPERIAL
24-24-0	**CONTROL - Cont'd**					
24-24-32	CLIP, Vacuum Switch Hose Connector Retaining		1	---- ---	2257 848	
24-24-67	RESISTOR, Blower Motor, except SD3		1	---- ---	2277 187	
24-24-68	GASKET, Blower Motor Resistor, except SD3		1	---- ---	2277 454	
24-24-85	BLOCK, Resistor, w/BRACKET, SD3	8	1	---- ---	1972 049	1972 049
	BLOCK, Resistor, SD3	8	1	---- ---	2258 815	2258 815
24-24-112	BEZEL PACKAGE, except SY1	8	1	---- ---	---- ---	2084 054
24-24-124	WIRING, Harness, Air Conditioning, SP1, SP2		1	---- ---	2258 825	
	Harness, SD1, SD2		1	---- ---	2290 334	
	SD3		1	---- ---	2426 154	
24-24-130	RELAY, Blower Motor, except SD3		1	---- ---	2277 478	
24-24-137	NUT, Blower Motor Switch, except SD3		1	---- ---	1339 711	
	Rear Unit, except SY1	8	1	---- ---	---- ---	1971 521
24-24-140	BEZEL, Floor Damper Control, Switch Title, except SY1	8	1	---- ---	---- ---	1972 488
	SY1	8	1	---- ---	---- ---	2197 663
	Blower Motor Switch, except SY1		1	---- ---	2256 616	1972 487
	Control, except SY1		1	---- ---	---- ---	*1971 938
24-24-150	SWITCH, Push Button Vacuum, except SD3		1	---- ---	2256 396	2096 084
	SD3	8	1	---- ---	2096 083	
	Aux. Vacuum, on Electric Switch, 4 Leads		1	---- ---	2257 452	
	SCREW, Vacuum Switch Mtg.		★	---- ---	6006 036	6006 036
	Temperature Selector, on Evaporator, 3 Leads		1	---- ---	2277 194	
	Aux. Vacuum, w/BRACKET and SLEEVE, 4 Leads		1	---- ---	2258 096	
24-24-156	KNOB, Temperature Control, SP1, SP2		1	---- ---	2258 166	
	SD1, SD2		1	---- ---	2258 359	
	Except SY1		1	---- ---	---- ---	1972 499
	SY1		1	---- ---	---- ---	2197 844
	SD3	8	1	---- ---	2197 623	
	Damper Control, except SY1		1	---- ---	---- ---	2257 955
	SY1		1	---- ---	---- ---	1887 935
	SD3	8	1	---- ---	2257 478	
24-24-159	PLATE, Temperature Control, SD3, SC1, SC2, SC3		1	---- ---	2197 466	2097 100
	SY1		1	---- ---	---- ---	2197 839
	SD1, SD2		1	---- ---	2258 342	
	SP1, SP2		1	*2258 161		
24-24-161	CONTROL, Push Button, w/BUTTONS, Plate and Vacuum Switch, SP1, SP2		1	---- ---	2258 170	
24-24-164	EXTENSION, Push Button					
	SP1, SP2 Off		1	---- ---	2258 171	
	SP1, SP2 Heat		1	---- ---	2258 172	
	SP1, SP2 Defroster		1	---- ---	2258 173	
	SP1, SP2 Cool		1	---- ---	2258 174	
	SD1, SD2 Off		1	---- ---	2258 348	
	SD1, SD2 Heat		1	---- ---	2258 349	
	SD1, SD2 Defroster		1	---- ---	2258 350	
	SD1, SD2 Cool		1	---- ---	2258 351	
	SD3 Fresh Cool	8	1	---- ---	2197 474	
	SD3 Max. Cool	8	1	---- ---	2197 473	
	SD3 Heat	8	1	---- ---	2197 475	
	SD3 Defroster	8	1	---- ---	2197 471	
	SD3 Off	8	1	---- ---	2197 468	
	Except SY1 Off	8	1	---- ---	---- ---	1887 667
	SY1 Off	8	1	---- ---	---- ---	2197 846
	Except SY1 Heat	8	1	---- ---	---- ---	1887 674

★ Indicates use as required.
8 Indicates parts not listed in any previous parts book.
March 8, 1963 Supersedes May 1, 1962.

Printed in U.S.A.
Prices and specifications subject to change without notice.
* Indicates change or addition.

MyMopar.com

CODE	PART NAME AND DESCRIPTION	CYL.	PER CAR	VALIANT LANCER	PLYMOUTH DODGE	CHRYSLER IMPERIAL
24-24-0	**CONTROL - Cont'd**					
24-24-164	EXTENSION - Cont'd					
	Except SY1 Heat	8	1	---- ---	--------	2197 853
	Except SY1 Defroster	8	1	---- ---	---- ---	1887 670
	SY1 Defroster	8	1	---- ---	---- ---	2197 849
	Except SY1 Max. Cool	8	1	---- ---	---- ---	1887 672
	SY1 Max. Cool	8	1	---- ---	---- ---	2197 851
	Except SY1 Fresh Cool	8	1	---- ---	---- ---	1887 673
	SY1 Fresh Cool	8	1	---- ---	---- ---	2197 852
	Except SY1 Air	8	1	---- ---	---- ---	1887 671
	SY1 Air	8	1	---- ---	---- ---	2197 850
24-24-165	SLEEVE, Control Arm, SY1	8	1	---- ---	---- ---	2097 942
24-24-167	SOCKET, Control Lamp, includes HOOD and BRACKET, SP1, SP2, SC1, SC2, SC3	8	1	---- ---	2197 001	2197 001
	LAMP, w/CABLE, Air Conditioning Control, SY1	8	1	---- ---	---- ---	2197 832
24-24-170	PAD, Push Button Control	8	1	---- ---	---- ---	2080 388
24-25-0	**COMPRESSOR**					
	NOTE: For Compressor and Generator Belt See Part Type Code 7-03-1.					
24-25-2	PISTON RING PACKAGE		1	2275 207	2275 207	2275 207
24-25-3	PISTON and CONNECTING ROD PACKAGE		1	2275 203	2275 203	2275 203
24-25-5	COMPRESSOR		1	2002 768	2002 768	2002 768
24-25-10	SUPPORT, Compressor, w/225 cu. in. Eng., Right	6	1	2264 867	2264 867	
	Rear	6	1	2264 868	2264 868	
	Right, w/170 cu. in. Eng.	6	1	2264 866		
	Right, w/318 cu. in. Eng.	8	1	---- ---	2264 219	
	Left, w/318 cu. in. Eng.	8	1	---- ---	2264 218	
	Left, Front, Model G	8	1	---- ---	1993 725	1993 725
	SUPPORT, Compressor, Front, SP2, SD2, SD3, SC1, w/361 cu. in. Eng., SC2, w/383, 413 cu. in. Eng., SC3, SY1	8	1	---- ---	1947 657	1947 657
24-25-15	BRACKET, Compressor Mtg., w/225 cu. in. Eng.	6	1	---- ---	2264 865	
	w/318 cu. in. Eng.	8	1	---- ---	2264 215	
	w/361, 383 cu. in. Eng.	8	1	---- ---	1852 932	1852 932
	w/413 cu. in. Eng.	8	1	---- ---	---- ---	1858 622
	BRACKET, Compressor Steady, w/361 cu. in. Eng., SP2, SD2	8	1	---- ---	2264 652	
	w/361, 383 cu. in. Eng., SD3	8	1	---- ---	1852 933	1852 933
	w/413 cu. in. Eng.	8	1	---- ---	---- ---	1858 620
	BRACKET, Compressor Steady, Side, w/361, 383 cu. in. Eng.	8	1	---- ---	2128 969	2128 969
	BRACKET, Compressor, Rear, w/318 cu. in. Eng.	8	1	---- ---	2264 217	
	BRACKET, Compressor Mtg., Model G, except SD3	6	1	2003 062	2264 865	
	w/361 cu. in. Eng., Model G, SD3	8	1	---- ---	1999 185	1999 185
	w/413 cu. in. Eng., Model G	8	1	---- ---	---- ---	2003 103
	BRACKET, Compressor Steady, w/361 cu. in. Eng., Model G.	8	1	---- ---	2003 056	2003 056
	w/413 cu. in. Eng., Model G	8	1	---- ---	---- ---	2003 104
	BRACKET, Steady Side, w/413 cu. in. Eng.	8	1	---- ---	---- ---	2128 970
24-25-20	PULLEY, w/HUB, SV1, SL1, SP1, SD1, Double Groove	6	1	2219 613	2219 613	
	SP2, SD2, w/318 cu. in. Eng., 6 1/2" dia., Stamping, Single Groove	8	1	---- ---	2277 378	
	SP2, SD2, w/318 cu. in. Eng., 7 1/4" dia., Cast Iron, Single Groove	8	1	---- ---	2277 790	
	SP2, SD2, SD3, 6 1/2" O.D. Single Groove	8	1	---- ---	*2003 058	*2003 058

★ Indicates use as required.
⊟ Indicates parts not listed in any previous parts book.
* Indicates change or addition

Printed in U.S.A.
Prices and specifications subject to change without notice.
March 8, 1963 Supersedes May 1, 1962.

MyMopar.com

CODE	PART NAME AND DESCRIPTION	CYL.	PER CAR	VALIANT LANCER	PLYMOUTH DODGE	CHRYSLER IMPERIAL
24-25-0	**COMPRESSOR - Cont'd**					
24-25-20	PULLEY, w/HUB - Cont'd					
	SP2, SD2, SD3, 6 1/4" O.D., Double Groove . . .	8	1	---- ---	*2097 106	*2097 106
	SP2, SD2, w/318 cu. in. Eng., 6 3/4" O.D., Stamped 2006 396	8	1	---- ---	2006 396	
24-25-26	NUT, w/WASHER, Idler Pulley Adjusting		1	---- ---	1740 972	1740 972
24-25-35	PULLEY, Compressor Idler, SP1, SD1, w/225 cu. in. Eng., SP2, SD2, w/318 cu. in. Eng. . . .		1	2203 031	2203 031	
	PULLEY, Compressor Idler, SP2, SD2, SD3, w/361 cu. in. Eng.	8	1	---- ---	2004 766	2004 766
	ROLLER, Compressor Idler, SP2, SD2, w/318 cu. in. Eng., SV1, SL1, SP1, SD1, w/225 cu. in. Eng.		1	2206 022	2206 022	
	ROLLER, SV1, SL1, w/170 cu. in. Eng.		1	2006 374	2006 374	
24-25-45	BRACKET, Idler Roller	6	1	2006 375	2264 871	
	Idler Pulley Adjusting	6	1	2003 060	2203 035	
	Idler Roller	8	1	---- ---	2264 555	
	Idler Pulley, w/318 cu. in. Eng.	8	1	---- ---	2264 221	
	Idler Pulley Adjusting, SP2, SD2, SD3, w/361 cu. in. Eng.	8	1	---- ---	2004 767	2004 767
	Idler Pulley Mtg., SD3	8	1	---- ---	1999 182	1999 182
	Idler Roller	6	1	2006 375		
24-25-60	GASKET, Oil Sump		1	1377 825	1377 825	1377 825
24-25-70	SEAL PACKAGE, Crankshaft, Gas		1	1426 501	1426 501	1426 501
24-25-84	HEAD, Cylinder, Right.		1	2000 083	2000 083	2000 083
	Left		1	1999 502	1999 502	1999 502
24-25-93	VALVE PLATE PACKAGE, Right		1	2275 204	2275 204	2275 204
	Left		1	2275 205	2275 205	2275 205
24-25-94	GASKET, Cylinder Head		2	1990 584	1990 584	1990 584
	Valve Plate		2	1990 598	1990 598	1990 598
24-25-107	FITTING, Discharge Service for Compressor 2002772 and 2264823		1	1997 449	1997 449	⊟2421 812
	For Compressor 2264824 and 2264 825		1	---- ---	⊟2421 813	2202 740
	FITTING, Suction Service for Compressor 2264823 .		1	---- ---	1997 448	1997 448
	For Compressor 2264824 and 2264825		1	---- ---	2002 739	2002 739
	For Compressor 2002772		1	2003 099	2003 099	2003 099
	FITTING, Suction for Compressor 2402 276	8	1	---- ---	---- ---	2007 102
	FITTING, Suction for Compressor 2402 230	8	1	---- ---	2007 168	
24-25-110	GASKET, Compressor Suction Fitting		1	---- ---	1997 446	1997 446
	Discharge Fitting		1	---- ---	1994 406	1994 406
24-25-114	SCREEN, Suction		1	1996 845	1996 845	1996 845
24-25-127	CAP, Compressor Gage Fitting		1	1989 202	1989 202	1989 202
24-25-132	VALVE, Pressure Regulator		1	2275 202	2275 202	2275 202
24-25-133	CORE, Gage Fitting		1	1992 947	1992 947	1992 947
24-25-135	SEAL, Pressure Regulator Valve 7/8" O.D. . . .		1	*1994 410	*1994 410	*1994 410
	SEAL, Discharge Port Fitting 1" I.D.		1	---- ---	*2008 388	*2008 388
24-25-137	SPRING, Regulator Valve Spacer		1	---- ---	*1994 408	*1994 408
24-25-154	CRANKSHAFT PACKAGE		1	2275 206	2275 206	2275 206

★ Indicates use as required.
⊟ Indicates parts not listed in any previous parts book.
March 8, 1963 Supersedes May 1, 1962.

Printed in U.S.A.
Prices and specifications subject to change without notice.
* Indicates change or addition.

MyMopar.com

CODE	PART NAME AND DESCRIPTION	CYL.	PER CAR	VALIANT LANCER	PLYMOUTH DODGE	CHRYSLER IMPERIAL
24-25-0	**COMPRESSOR - Cont'd**					
24-25-156	SCREW, Clutch Pulley Mtg.		1	1658 638	1658 638	1658 638
24-25-157	WASHER, Clutch Pulley Mtg.		1	2097 102	2097 102	2097 102
24-25-160	BEARING, Crankshaft, Ball		1	1854 829	1854 829	1854 829
24-25-162	HOUSING PACKAGE, Front Bearing		1	2196 315	2196 315	2196 315
24-25-189	SEAL, Crankshaft Bearing Housing, Front		1	1377 831	1377 831	1377 831
24-25-219	BEARING, Clutch		1	1769 318	1769 318	1769 318
24-25-232	COIL, Clutch Field		1	2097 105	2097 105	2097 105
	w/318 cu. in. Eng., w/Pulley Stamped 2006 396	8	1	---- ---	2006 395	
24-25-234	RING, Clutch, External		1	2097 101	2097 101	2097 101
	Clutch, Internal		1	2097 103	2097 103	2097 103
24-25-246	OIL PUMP PACKAGE		1	2196 306	2196 306	2196 306
24-25-252	SEAL, Oil Pump Cover		1	1747 988	1747 988	1747 988
24-25-258	SUMP, Oil		1	1747 962	1747 962	1747 962
24-25-260	GASKET, Oil Sump		1	1377 825	1377 825	1377 825
24-26-0	**RECEIVER DRIER**					
24-26-20	RECEIVER DRIER PACKAGE		1	---- ---	1880 658	1880 658
	w/Model G	6	1	1998 644		
	w/Model G		1	---- ---	1742 766	1742 766
24-26-21	SCREW, Drier Mtg.		2	9414 721	9414 721	9414 721
24-26-26	PLUG, Fusible Metal		1	1998 645	1744 767	
24-26-35	BRACKET, Receiver Drier Mtg., SD3		1	---- ---	*2219 155	*2219 155
24-26-100	MUFFLER, Compressor, Model G	6	1	2004 756	2004 756	
	Suction, SP2, SD2, w/318 cu. in. Eng. Model G	8	1	---- ---	*2004 773	
	Suction, SP1, SD1, w/225 cu. in. Eng., SP2, SD2, w/361 cu. in. Eng.		1	---- ---	*2277 792	
	Suction, SP2, SD2, w/318 cu. in. Eng.	8	1	---- ---	*2277 797	
	Suction, SD3, SC1, W361 cu. in. Eng. SC2, SC3, SY1, w/Single Unit	8	1	---- ---	*2277 795	*2277 795
	Suction, SC1, SC2, SC3, SY1, w/Dual Unit	8	1	---- ---	---- ---	*2277 796
	Discharge, SP1, SD1, w/225 cu. in. Eng. SP2, SD2, w/361 cu. in. Eng.		1	---- ---	*2277 432	
	Discharge, SP2, SD2, w/318 cu. in. Eng., w/6 1/2" Tube lgh.	8	1	---- ---	*2277 826	
	Discharge, SP2, SD2, w/318 cu. in. Eng., w/8" Tube lgh., w/TEE	8	1	---- ---	*2277 386	
	Discharge, SD3, SC1, SC2, w/361 cu. in. Eng. SC2, SC3, SY1	8	1	---- ---	*2219 549	*2219 549

★ Indicates use as required.
B Indicates parts not listed in any previous parts book.
* Indicates change or addition.

Printed in U.S.A.
Prices and specifications subject to change without notice.
March 8, 1963 Supersedes May 1, 1962.

MyMopar.com

CODE	PART NAME AND DESCRIPTION	CYL.	PER CAR	VALIANT LANCER	PLYMOUTH DODGE	CHRYSLER IMPERIAL
24-27-0	**CONDENSER**					
24-27-5	CONDENSER, except SD3	8	1	---- ---	2219 729	1904 224
	SD3	8	1	---- ---	1904 224	
	Model G	6	1	2004 747		
	Model G		1	---- ---	2004 754	2004 754
	SCREW, w/WASHER	8	4	---- ---	---- ---	6022 506
	J/NUT	8	4	---- ---	---- ---	6010 006
24-27-10	SCREW, Condenser Mtg. Bracket, Model G		4	1740 029	1740 029	1740 029
24-28-0	**EVAPORATOR**					
24-28-3	COVER, Lock Pillar Hose, Sub., Color Frost					
	Upper, Right	8	1	---- ---	---- ---	2172 825
	Upper, Left	8	1	---- ---	---- ---	2172 826
	Lower, Right	8	1	---- ---	---- ---	2172 827
	Lower, Left	8	1	---- ---	---- ---	2172 828
	Color Red, Upper, Right	8	1	---- ---	---- ---	2177 175
	Upper, Left	8	1	---- ---	---- ---	2177 176
	Lower, Right	8	1	---- ---	---- ---	2177 189
	Lower, Left	8	1	---- ---	---- ---	2177 190
	Color Cocoa, SC1, SC3, Upper, Right	8	1	---- ---	---- ---	2178 613
	SC1, SC3, Upper, Left	8	1	---- ---	---- ---	2178 614
	SC1, SC2, Lower, Right	8	1	---- ---	---- ---	2178 615
	SC1, SC2, Lower, Left	8	1	---- ---	---- ---	2178 616
24-28-5	EVAPORATOR, SP1, SP2, SD1, SD2		1	---- ---	*2219 826	
	Roof Unit	8	1	---- ---	---- ---	1886 232
	Model G, w/VALVE	6	1	1999 150		
	Model G, w/o Valve		1	2003 057	2206 388	2003 057
24-28-8	BRACKET, Evaporator Mtg., Frt. Unit		1	---- ---	2277 209	
	Evaporator Mtg., Roof Unit, Sub.		4	---- ---	---- ---	1971 956
	BRACKET, Evaporator Mtg., Model G	6	1	1998 633		
	Right, Model G, except SD3		1	---- ---	*2003 095	
	Left, Model G, except SD3		1	---- ---	*2003 063	
	SD3	8	1	---- ---	*2013 028	
	Except SY1, Model G	8	1	---- ---	---- ---	1993 677
	SY1, Model G	8	1	---- ---	---- ---	1993 674
24-28-17	CLAMP, Discharge Tube to Yoke		1	---- ---	*2277 430	
24-28-19	GROMMET, Suction Tube, Rear Unit		1	---- ---	---- ---	1658 766
	3/8" Tubing		★	---- ---	2006 394	
	Vacuum Feed Tube		1	*1886 101	*1886 101	*1886 101
	Blower Motor Mtg. SD3	8	1	---- ---	*1879 827	*1879 827
	3/8" Tubing		★	---- ---	*2006 394	
24-28-22	SCREW, Evaporator Mtg., except SD3		1	1983 786	1740 029	6015 014
	SD3		1	---- ---	6015 014	
24-28-24	HOSE and REFRIGERANT TUBE					
	Note: For Refrigerant Hose see Chart in Front of Group 24.					
	TUBE, Copper, 25 ft. Roll, 1/4" dia.		★	1556 710	1556 710	1556 710
	3/8" dia.		★	1638 010	1638 010	1638 010
	1/2" dia.		★	1556 712	1556 712	1556 712
	5/16" dia.		★	1556 711	1556 711	1556 711
	5/8" dia.		★	1556 713	1556 713	1556 713
	TUBE, Discharge, 76" lgh., 1/2" O.D., except SD3		1	---- ---	2277 836	
	TUBE, Liquid, 45" lgh., 3/8" O.D., except SD3		1	---- ---	2277 835	
24-28-25	HOUSING, Evaporator Coil, w/LINKAGE, Front Unit, Rear, SD3	8	1	---- ---	2097 376	2097 376
	HOUSING, Evaporator Coil, w/LINKS, Front Unit, Center, SD3	8	1	---- ---	2096 259	2096 259

★ Indicates use as required.
⊟ Indicates parts not listed in any previous parts book.
Printed in U.S.A.
Prices and specifications subject to change without notice
* Indicates change or addition.

MyMopar.com

CODE	PART NAME AND DESCRIPTION	CYL.	PER CAR	VALIANT LANCER	PLYMOUTH DODGE	CHRYSLER IMPERIAL
24-28-0	**EVAPORATOR - Cont'd**					
24-28-26	CONNECTOR, Control Hose, "Y", Plastic,					
	except SD3	8	1	---- ---	2277 713	
	1" lgh. 1/8" I.D.		★	---- ---	⊟2485 019	
	1" lgh. 3/14" I.D.		★	---- ---	⊟2485 020	
24-28-31	GASKET, Evaporator to Dash, SD3	8	1	---- ---	*1887 257	*1887 257
24-28-33	FLANGE, Rear Outlet Housing Mtg., w/GASKET	8	2	---- ---	---- ---	2096 681
24-28-36	WASHER, Suction Hose Seal, SD3	8	★	---- ---	2096 887	2096 887
	Liquid Hose Seal, SD3	8	★	---- ---	2219 169	2219 169
	WASHER PACKAGE, Refrigerant Hose, Seal, Copper		★	---- ---	*2196 341	*2196 341
24-28-47	TROUGH, Evaporator Drain, SD3	8	1	---- ---	2096 182	2096 182
24-28-48	SWIVEL, Defroster Door Lever, SD3	8	1	---- ---	1972 789	1972 789
24-28-53	DUCT, Defroster Outlet	6	1	1998 604		
24-28-55	CONNECTOR, Distribution Duct, Outlet, Rubber,					
	SD3	8	1	---- ---	2096 024	2096 024
	SD3, Defroster Outlet	8	1	---- ---	1972 324	
	CONNECTOR PACKAGE, Right, w/Air Outlet					
	Tube, SY1	8	1	---- ---	---- ---	2279 917
24-28-59	SCREW, Recirculating Door Link, SD3	8	1	---- ---	1885 835	1885 835
24-28-60	COVER, Rear Unit Evaporator Housing, Rear	8	1	---- ---	---- ---	1648 380
24-28-63	GASKET, Heater Core Cover, SD3	8	1	---- ---	1879 861	1879 861
24-28-64	VACUUM TUBE REPAIR KIT		★	---- ---	⊟2448 621	
	VACUUM TUBE REPAIR KIT		★	---- ---	⊟2448 620	
	VACUUM TUBE REPAIR KIT		★	---- ---	⊟2275 215	⊟2275 215
24-28-70	GRILLE, Rear Unit Inlet, except SY1	8	1	---- ---	---- ---	1885 901
	SY1	8	1	---- ---	---- ---	1887 501
24-28-72	CLIP, Grille, Front Unit Inlet, except SY1	8	4	---- ---	---- ---	1331 850
	Recirculating Door Link	8	1	---- ---	---- ---	666 790
	Retainer, Outlet Louver, except SY1	8	★	---- ---	---- ---	1972 979
24-28-73	DUCT, Outlet, Frt. Unit, Left, except SY1	8	1	---- ---	---- ---	1972 956
	DUCT, Outlet, Frt. Unit, Right, except SY1	8	1	---- ---	---- ---	1972 359
	DUCT, Connector, Right to Bezel, also to					
	Distribution Duct, Frt. Unit, SY1	8	2	---- ---	---- ---	2219 019
	DUCT, Air Return, Rear Unit, except SY1, SD3	8	1	---- ---	*1972 360	*1972 360
	DUCT, Air Return, Rear Unit, SY1	8	1	---- ---	---- ---	1648 430
	DUCT, Air Outlet, Rear Unit	8	2	---- ---	---- ---	*1648 407
	DUCT, Fresh Air Intake, except SD3	8	1	---- ---	2277 342	
	DUCT PACKAGE, Air Outlet Right, includes					
	CONNECTOR, Front Unit, SY1	8	1	---- ---	---- ---	⊟2279 917
	DUCT, Spot Cooler, Left		1	---- ---	⊟2219 924	
	DUCT, Outlet, Right, SD3	8	1	---- ---	⊟2219 010	⊟2219 010
24-28-75	BEZEL, Air Outlet, Frt. Unit, Right,					
	except SY1	8	1	---- ---	---- ---	1972 960
	Left, except SY1	8	1	---- ---	---- ---	1972 961
	Air Outlet, includes Louver, Frt. Unit	8	1	---- ---	2219 396	
	SD3, Outlet	8	1	---- ---	2219 004	
24-28-76	RETAINER, Inlet Duct to Evaporator, Rear Unit,					
	except SY1	8	2	---- ---	---- ---	1886 025
	SY1	8	2	---- ---	---- ---	1648 460
	Inlet Duct to Shelf, except SY1	8	2	---- ---	---- ---	2097 010

★ Indicates use as required.
⊟ Indicates parts not listed in any previous parts book.
* Indicates change or addition.

Printed in U.S.A.
Prices and specifications subject to change without notice.
March 8, 1963 Supersedes May 1, 1962.

MyMopar.com

CODE	PART NAME AND DESCRIPTION	CYL.	PER CAR	VALIANT LANCER	PLYMOUTH DODGE	CHRYSLER IMPERIAL
24-28-0	**EVAPORATOR - Cont'd**					
24-28-78	LOUVER, Air Outlet, Frt. Unit w/BEZEL	8	1	---- ---	2219 396	
	Air Outlet, Frt. Unit, w/FRAME, SD3, SC1, SC2, SC3	8	4	---- ---	2219 057	*2219 057
	Right, SY1, w/HOUSING	8	1	---- ---	---- ---	2197 370
	Left, SY1, w/HOUSING	8	1	---- ---	---- ---	2197 371
	LOUVER, w/HOUSING, Rear Unit	8	2	---- ---	---- ---	2096 940
	Roof Unit, Sub.	8	4	---- ---	---- ---	1838 380
	GRILLE, Model G, includes FRAME		1	*1997 542	*1997 542	*1997 542
24-28-79	SCREEN, Inlet Grille, Rear Unit, SY1	8	1	---- ---	---- ---	1570 956
24-28-80	DEFLECTOR, Floor, Frt. Unit, Left, SD3	8	1	---- ---	*1886 413	*1886 413
24-28-83	GASKET, Air Outlet Louver, except SY1	8	4	---- ---	---- ---	⊟2277 050
24-28-84	ADAPTER, Air Outlet Louver, Roof Unit, Sub.	8	1	---- ---	---- ---	1753 579
24-28-90	DOOR, Fresh Air, except SD3		1	---- ---	2162 418	
24-28-92	SEAL, Door Housing to Dash		1	---- ---	2162 245	
24-28-93	CONNECTOR, Air Outlet, Right, SY1, w/TUBE	8	★	---- ---	2219 798	2219 019
	Left, SY1, w/TUBE	8	1	---- ---	2219 799	2279 917
	CONNECTOR, Outlet Duct, Rubber, SD3	8	1	---- ---	2096 024	2096 024
24-28-98	VANE, Horizontal, Model G		4	1997 541	1997 541	1997 541
	VANE, Vertical, Model G		8	1998 591	1998 591	1998 591
	VANE, Horizontal Control, Model G		2	1997 545	1997 545	1997 545
	VANE, Vertical Control, Model G.		4	1998 590	1998 590	1998 590
24-28-99	LINKAGE, Heater Control, on Evaporator	8	1	---- ---	2277 124	
24-28-101	RETAINER, Fresh Air Door Shaft, except SD3		1	---- ---	2162 360	
24-28-104	BALL STUD, Recirculating Door Link		1	---- ---	1858 936	
24-28-106	RETAINER, Recirculating Door Ball Joint		1	---- ---	1945 197	
24-28-108	SPRING, Fresh Air Door over Center		1	---- ---	2277 262	
24-28-113	HOUSING, Fresh Air Door, except SD3		1	---- ---	*2162 239	
24-28-175	HOUSING, Blower, Rear Unit	8	1	---- ---	---- ---	1648 394
	Model G		2	1991 576	1991 576	1991 576
	Sub. CCW	8	1	---- ---	---- ---	*1887 300
	Sub. CW	8	1	---- ---	---- ---	*1887 299
24-28-176	SEAL, Distribution Duct Inlet to Dash, SD3	8	1	---- ---	1887 757	1887 757
24-28-186	ROTOR, Axial, Blower		1	---- ---	2219 103	
24-28-195	MOTOR, Axial, w/Mtg. PLATE		1	---- ---	2277 418	
	Frt. Unit, SD3	8	1	---- ---	*1879 579	*1879 579
	Rear Unit	8	2	---- ---	---- ---	1887 401
	Roof Unit	8	2	---- ---	---- ---	1886 266
	Model G		1	1985 536	1985 536	1985 536
	WASHER, Blower Motor to Blower, Roof Unit	8	16	---- ---	---- ---	6006 065
	WASHER, Blower Motor Mtg.	8	12	---- ---	---- ---	6006 065
24-28-199	RING, w/BRACKET, Axial Blower		1	---- ---	2277 585	
24-28-200	SPACER, Distribution Duct to Dash	6	1	---- ---	1704 198	
	Motor Mtg. Bracket to Plate, Rear Unit	8	1	---- ---	1605 271	1605 271

★ Indicates use as required.
⊟ Indicates parts not listed in any previous parts book.
March 8, 1963 Supersedes May 1, 1962.

Printed in U.S.A.
Prices and specifications subject to change without notice.
* Indicates change or addition.

MyMopar.com

24-28-0 EVAPORATOR - Cont'd

CODE	PART NAME AND DESCRIPTION	CYL.	PER CAR	VALIANT LANCER	PLYMOUTH DODGE	CHRYSLER IMPERIAL
24-28-204	SPACER, Fan Pulley, Model G		1	2003 059	2003 059	2003 059
24-28-205	CLIP, Axial Blower Motor Balancing, 1/4" width, 1 1/8" lgh.		★	---- ---	*2277 247	
	9/16" width, 1 1/8" lgh.		★	---- ---	*2277 248	
	13/16" width, 1 1/8" lgh.		★	---- ---	*2277 249	
	CLIP, Balancing Wire Retainer		1	---- ---	2277 263	
	13/16" width, 1 1/8" lgh.		★	---- ---	⊟2277 672	
	35/64" width, 1 1/8" lgh.		★	---- ---	⊟2277 671	
	17/64" width, 1 1/8" lgh.		★	---- ---	⊟2277 670	
	1/4" width, 3/4" lgh.		★	---- ---	⊟2277 884	
	1/4" width, 1" lgh.		★	---- ---	⊟2277 885	
	1/4" width, 1 1/2" lgh.		★	---- ---	⊟2277 186	
	1/4" width, 2" lgh.		★	---- ---	⊟2277 887	
	1/4" width, 2 1/2" lgh.		★	---- ---	⊟2277 888	
24-28-210	WHEEL, Blower Motor, Frt. Unit, SD3	8	★	---- ---	*1880 442	*1880 442
	Rear Unit, except Sub.	8	2	---- ---	---- ---	1235 644
	Right, Model G		1	1985 539	1985 539	1985 539
	Left, Model G		1	1985 537	1985 537	1985 537
	Sub. CCW	8	1	---- ---	---- ---	*1886 263
	Sub. CW	8	1	---- ---	---- ---	*1886 265
24-28-220	COIL, Evaporator, Frt. Unit, except SD3		1	---- ---	2219 837	2096 253
	SD3	8	1	---- ---	2096 253	
	Rear Unit	8	1	---- ---	---- ---	1880 642
	Roof Unit, Sub.	8	1	---- ---	---- ---	1886 249
	Model G	6	1	1991 581		
	Model G		1	---- ---	2003 074	1991 581
	STUD, Coil Drain 3/8" lgh., 3/8" head		2	---- ---	*6024 097	
	STUD, Coil Drain 3/8" lgh., 1/2" head		2	---- ---	*6024 098	
24-28-230	RING, Defroster Damper		★	---- ---	*1539 430	
24-28-232	THERMO, w/Mtg. PLATE, except SD3		1	---- ---	2219 639	
24-28-235	NUT, Evaporator Coil Grommet, SD3	8	★	---- ---	1605 267	1605 267
24-28-241	SWITCH, Thermo, Model G		1	1997 564	1997 564	1997 564
24-28-248	KNOB, Thermo Switch, Model G		1	1997 553	1997 553	1997 553
24-28-300	VALVE, Expansion, Front and Rear Unit, except SD3	8	1	---- ---	2275 584	1879 580
	SD3	8	1	---- ---	1879 580	
	Roof Unit, Sub.	8	1	---- ---	---- ---	1887 364
	w/Model G	6	1	1999 149		
	w/Model G		1	---- ---	1991 619	1991 619
24-28-305	CLIP, Tube Mtg. to Center Bracket, SY1	8	1	---- ---	---- ---	2277 668
24-28-318	TEE, Control Tube, Plastic, SD3	8	1	---- ---	*1886 109	*1886 109
	Liquid Hose	8	1	---- ---	---- ---	1885 692
24-28-322	INDICATOR PACKAGE		1	---- ---	2275 597	1880 657
	Model G		1	1744 768	1744 768	1744 768
	SD3, w/361 cu. in. Eng.	8	1	---- ---	1880 657	
24-28-326	SEAL, Air Conditioning Tube, Rubber, 1/4" O.D.		★	---- ---	2277 190	2277 190
	3/8" O.D.		★	---- ---	2219 383	2219 383
	1/2" O.D.		★	---- ---	2219 384	2219 384
	5/8" O.D.		★	---- ---	2219 385	2219 385

★ Indicates use as required.
⊟ Indicates parts not listed in any previous parts book.
* Indicates change or addition.

Printed in U.S.A.
Prices and specifications subject to change without notice.
March 8, 1963 Supersedes May 1, 1962.

MyMopar.com

CODE	PART NAME AND DESCRIPTION	CYL.	PER CAR	VALIANT LANCER	PLYMOUTH DODGE	CHRYSLER IMPERIAL
24-28-0	**EVAPORATOR - Cont'd**					
24-28-357	NUT, Floor Air Damper Control Mounting, SD3	8	1	---- ---	1339 711	1339 711
	NUT, Blower Switch Mtg.	8	1	---- ---	1339 711	
	NUT, Floor Damper Rotary Control, SD3	8	1	---- ---	1972 548	
24-28-359	SHAFT, Deflector, w/LEVER, SD3	8	1	---- ---	1972 817	
24-28-361	CLIP, Temperature Control Cable		1	---- ---	6015 143	6015 143
24-28-363	KNOB, Floor Damper Control	8	1	---- ---	---- ---	1887 935
	SD3	8	1	---- ---	2257 478	
24-28-364	DUCT, Distribution, SD3	8	1	---- ---	1972 594	1972 594
24-28-366	CONTROL, Floor Air Damper, except SY1	8	1	---- ---	---- ---	2096 112
	SY1	8	1	---- ---	---- ---	2198 024
	SD3	8	1	---- ---	2096 111	
24-28-368	WASHER, Defroster Shaft, SD3	8	1	---- ---	1971 463	1971 463
24-28-378	NUT, Defroster Shaft, SD3	8	1	---- ---	1829 825	
24-28-379	DOOR PACKAGE, Defroster, SD3	8	1	---- ---	2084 295	
24-28-382	BEZEL, Floor Air Damper Control SD3	8	1	---- ---	*2197 498	
24-28-384	COVER, Deflector Lever, SD3	8	1	---- ---	2097 152	2097 152
24-28-387	SPOT COOLER, Right		1	---- ---	2277 412	
	Left		1	---- ---	2219 736	
	SD3, SC1, SC2, SC3	8	1	---- ---	1972 372	1972 372
	w/SPACER, SY1	8	1	---- ---	---- ---	2197 885
24-28-392	CLIP, Deflector Actuator Shaft, SD3	8	1	---- ---	2197 678	2197 678
24-28-393	BUMPER, Spot Cooler Door	8	1	---- ---	2080 201	
24-28-396	CLAMP, Spot Cooler Tube Mtg., Right		2	---- ---	2277 426	
24-28-397	BRACKET, Spot Cooler Tube Mtg., Out Board		1	---- ---	2277 428	
	In Board		1	---- ---	2277 427	
24-29-0	**ACTUATOR**					
24-29-1	ACTUATOR, Defroster, except SD3	8	1	---- ---	2219 916	2277 051
	Defroster, SD3	8	1	---- ---	2277 051	
	Deflector, SD3	8	1	---- ---	2277 053	2277 053
	Recirculating Door, SD3	8	1	---- ---	2277 052	2277 052
	By-Pass Door, SD3	8	1	---- ---	2277 054	2277 054
	Spot Cooler		1	---- ---	2219 915	
24-29-14	RETAINER, Vacuum Actuator Shaft		★	---- ---	2197 678	2197 678
	RETAINER, Deflector Actuator Shaft, SD3	8	★	---- ---	2076 405	2076 405

NOTES

★ Indicates use as required.
⊟ Indicates parts not listed in any previous parts book.
Printed in U.S.A.
Prices and specifications subject to change without notice.
* Indicates change or addition.

MyMopar.com

ALPHABETICAL INDEX

PART NAME	CODE
A	
Absorber, shock	17-23-3 to 17-23-57
Accelerator pedal	14-01-1
Accelerator pedal return spring	14-06-1 to 14-06-10
Accelerator pedal to accelerator shaft rod	14-07-1 to 14-07-15
Accelerator shaft	14-11-1 to 14-11-48
Actuator	24-29-1 to 24-29-14
Adjuster, front seat	23-47-6 to 23-47-458
Adjuster, parking brake	4-07-1 to 4-07-28
Adjuster, wheel brake	5-20-1 to 5-20-20
Air cleaner, carburetor	14-29-2 to 14-29-44
Air cleaner, power brake	5-113-17
Air conditioning	24-01-1 to 24-01-65
Air conditioning control	24-24-5 to 24-24-170
Air intake	23-61-39 to 23-61-116
Alternator	8-28-3 to 8-28-292
Alternator component parts	8-29-17 to 8-29-208
Anchor, parking brake shoe	4-06-1 to 4-06-11
Antenna, radio	1-88-1 to 1-88-206
Anti-squeak, body	23-31-33 to 23-31-205
Arm, front wheel lower control	2-10-6 to 2-10-76
Arm, front wheel upper control	2-08-5 to 2-08-72
Arm, power steering gear	19-27-2 to 19-27-55
Arm, power steering gear idler	19-27-2 to 19-27-55
Arm, standard steering gear	19-27-2 to 19-27-55
Arm, standard steering gear idler	19-27-2 to 19-27-55
Arm, steering linkage knuckle	2-05-4
Arm rest, front door	23-76-3 to 23-76-107
Ash receiver	23-02-1 to 23-02-150
Assist strap	23-77-3 to 23-77-17
Automatic choke to carburetor rod clip	14-65-4
Automatic door lamp switch	8-12-1 to 8-12-17
Automatic headlamp dimmer	1-04-4 to 1-04-18
Automatic pilot	14-02-1 to 14-02-72
Automatic 3 speed transmission	21-02-1
Automatic 3 speed transmission band	21-136-237
Automatic 3 speed transmission case	21-03-1 to 21-03-28
Automatic 3 speed transmission case extension	21-04-1 to 21-04-12
Automatic 3 speed transmission clutch	21-133-5 to 21-133-65
Automatic 3 speed transmission control lever	21-142-12 to 21-142-21
Automatic 3 speed transmission front and rear planet pinion carrier and components	21-134-5 to 21-134-45
Automatic 3 speed transmission gearshift button and cable	21-30-28 to 21-30-394
Automatic 3 speed transmission governor	21-138-2 to 21-138-38
Automatic 3 speed transmission input shaft	21-129-5 to 21-129-24

MyMopar.com

PART NAME	CODE
Automatic 3 speed transmission neutral starter switch	21-113-24 to 21-113-29
Automatic 3 speed transmission oil pan	21-119-3 to 21-119-25
Automatic 3 speed transmission oil pump	21-118-6 to 21-118-57
Automatic 3 speed transmission oil pump strainer	21-117-1 to 21-117-3
Automatic 3 speed transmission output shaft	21-05-1 to 21-05-35
Automatic 3 speed transmission package	21-01-3
Automatic 3 speed transmission servos	21-137-5 to 21-137-205
Automatic 3 speed transmission set	21-01-3
Automatic 3 speed transmission speedometer cable, includes shaft and housing	21-84-1 to 21-84-28
Automatic 3 speed transmission speedometer pinion	21-85-5 to 21-85-61
Automatic 3 speed transmission switch package	21-113-24
Automatic 3 speed transmission torque converter reaction shaft	21-129-5 to 21-129-24
Automatic 3 speed transmission valve body and valves	21-139-4 to 21-139-193
B	
Back, rear seat	23-109-3 to 23-109-40
Back-up lamp	1-10-1 8-56-1 to 8-56-75
Back-up lamp switch	8-56-2
Band, automatic 3 speed transmission	21-136-5 to 21-136-237
Band, parking brake	4-03-1 to 4-03-11
Bar, front bumper face	13-64-3 to 13-64-150
Bar, radiator cross	7-33-1 to 7-33-12
Bar, rear bumper face	13-66-3 to 13-66-147
Bar, side sill and belt	23-51-3 to 23-51-45
Battery and cable	8-01-4 to 8-01-25
Battery heat shield	13-35-1
Battery hold-down strap	13-34-3
Battery hold-down stud	13-36-5
Battery support tray	13-33-61 to 13-33-68
Bearing, camshaft	9-16-6 to 9-16-17
Bearing, clutch release	6-19-2 to 6-19-3
Bearing, differential	3-11-1 to 3-11-14
Bearing, drive pinion	3-22-24 to 3-22-45
Bearing, drive shaft	3-33-1 to 3-33-9
Bearing, front wheel	22-06-1 to 22-06-18
Bearing, propeller shaft center	16-16-1 to 16-16-47
Bearing package, connecting rod	9-32-2
Bearing package, crankshaft	9-09-2
Bearing, standard transmission countershaft	21-25-2 to 21-25-6
Bearing, standard transmission main shaft	21-19-2 to 21-19-15
Bearing, standard transmission main shaft pilot	21-17-2 to 21-17-7
Belt, fan and related drive	7-03-1
Belt, seat	1-67-1 to 1-67-9
Belt package, seat	1-67-1
Block, cylinder	9-02-7 to 9-02-16
Block, rear spring silent	17-17-3 to 17-17-5
Block, terminal	8-21-1
Blower switch	24-24-5
Board, floor	23-04-2 to 23-04-250
Body, universal joint	16-04-1
Body anti-squeak	23-31-33 to 23-31-205

MyMopar.com

PART NAME	CODE
Body bracket	23-07-168 to 23-07-169
Body bumper	23-08-12 to 23-08-76
	23-32-8 to 23-32-115
Body insulator	23-31-33 to 23-31-205
Body liner	23-31-33 to 23-31-205
Body pad	23-31-33 to 23-31-205
Body pan	23-32-3 to 23-32-115
Body panel	23-34-10 to 23-34-354
Body pillar	23-36-5 to 23-36-134
Body plug	23-32-8 to 23-32-115
Body reinforcement	23-07-168 to 23-07-169
Body seal	23-31-33 to 23-31-205
Body striker	23-08-13 to 23-08-76
Bolt, drive gear	3-20-1
Bolt, rear spring center	17-14-10
Boot, folding top dust	23-112-12 to 23-112-153
Boot, master cylinder	5-40-1
Boot, wheel cylinder	5-69-1
Box, glove	23-06-4 to 23-06-53
Brace, front fender	12-07-1 to 12-07-3
Bracket, body	23-07-168 to 23-07-169
Bracket, brake pedal	5-31-11 to 5-31-18
Bracket, brake tube	5-57-2
Bracket, fender pillar support and cowl	12-05-2
Bracket, frame engine rear support crossmember	9-70-9
Bracket, front fender	12-06-3 to 12-06-6
Bracket, power steering column	19-31-1 to 19-31-38
Bracket, shock absorber	17-24-3 to 17-24-28
Bracket, standard steering column	19-31-1 to 19-31-24
Bracket, throttle control cable mounting	14-26-2 to 14-26-6
Bracket and switch, turn signal cancelling	8-50-125
Brake, power	1-42-1
Brake drum	22-04-2 to 22-04-14
Brake flexible hose	5-62-1 to 5-62-20
Brake fluid	5-01-2
Brake pedal and bushing	5-27-1 to 5-27-21
Brake pedal bracket	5-31-11 to 5-31-18
Brake pedal pad	5-28-8
Brake pedal return spring	5-34-1 to 5-34-6
Brake pedal shaft	5-29-1
Brake pedal stop	5-30-12
Brake shoe guide	5-25-9
Brake switch, mechanical	14-02-32
Brake tube bracket	5-57-2
Brake tube clip	5-56-2
Brake tube tee	5-58-1 to 5-58-2
Brake tubing and cover	5-53-3 to 5-53-4
Bulb	8-44-1
Bumper, body	23-08-12 to 23-08-76
	23-32-8 to 23-32-115
Bumper, hood	15-09-4
Bumper, rear spring	17-19-3 to 17-19-20
Bumper guard	1-01-1
	13-68-6 to 13-68-18
Bumper jack	13-72-1 to 13-72-4
Bushing and pedal, brake	5-27-1 to 5-27-21
Bushing and roller, universal cross	16-10-1 to 16-10-3
Button, universal joint centering	16-06-1 to 16-06-3

MyMopar.com

PART NAME	CODE
Button and cable, automatic 3 speed transmission gearshift	21-30-28 to 21-30-394
Buttons, tufting	23-78-2
C	
Cable, fast idle	14-24-1 to 14-24-11
Cable, includes shaft and housing, automatic 3 speed transmission	21-84-1 to 21-84-28
Cable, parking brake	4-23-1 to 4-23-51
Cable, speedometer, standard transmission, includes shaft and housing	21-84-1 to 21-84-28
Cable and battery	8-01-4 to 8-01-25
Cable and connection	8-16-1 to 8-16-10
Cable and switch, turn signal electric	8-50-82
Camshaft	9-15-1 to 9-15-10
Camshaft bearing	9-16-6 to 9-16-17
Camshaft sprocket	9-17-5 to 9-17-13
Cap, crankshaft bearing	9-10-2 to 9-10-19
Cap, fuel tank locking	1-39-2
Cap, hub	22-08-5 to 22-08-57
Cap, radiator filler	7-12-1
Carburetor	14-30-1
Carburetor air cleaner	14-29-2 to 14-29-44
Carburetor assemblies and service parts	14-30-1 14-30-2 14-30-4 14-30-7 14-30-8 14-30-27 14-30-28 14-35-1 14-35-6 14-35-8 14-39-45 14-41-3 14-43-5
Carburetor lever return spring	14-08-36 to 14-08-37
Carpet, front floor	23-79-3 to 23-79-79
Carrier, spare wheel	22-20-29 to 22-20-89
Carrier and components, automatic 3 speed transmission front and rear planet pinion	21-134-5 to 21-134-45
Carrier and differential, rear axle	3-03-1 to 3-03-36
Case, automatic 3 speed transmission	21-03-1 to 21-03-28
Case, differential	3-04-6 to 3-04-10
Case, standard transmission	21-03-1 to 21-03-25
Center pillar trim cover	23-99-4 to 23-99-41
Center seat cushion	23-70-1 to 23-70-22
Chain, timing	9-20-1
Chain case cover	9-23-5 to 9-23-40
Channel, glass	23-09-2 to 23-09-75
Chassis and body wiring	8-15-2 to 8-15-53
Check, door	23-10-1 to 23-10-17
Child guard rear door safety lock	1-72-5
Cigar lighter	1-12-0 8-20-3 to 8-20-16
Clamp, power brake hose	5-112-1
Clip, automatic choke to carburetor rod	14-65-4
Clip, brake tube	5-56-2
Clip, fuel line tube	14-90-1
Clip, rear spring	17-15-1 to 17-15-30
Clock	1-12-1
Clutch	6-01-3
Clutch, automatic 3 speed transmission	21-133-5 to 21-133-65
Clutch cover and pressure plate	6-14-1 to 6-14-10
Clutch disc	6-13-1 to 6-13-8
Clutch housing	6-09-1 to 6-09-11
Clutch housing pan	6-10-2 to 6-10-31

MyMopar.com

PART NAME	CODE
Clutch parts, differential	3-09-1 to 3-09-3
Clutch pedal	6-38-1 to 6-38-26
Clutch pedal pad	6-39-2
Clutch pedal rod	6-50-1 to 6-50-34
Clutch pedal shaft	6-43-7 to 6-43-13
Clutch pressure plate	6-15-1
Clutch pressure spring	6-16-1
Clutch release bearing	6-19-2 to 6-19-3
Clutch release bearing return spring	6-20-14
Clutch release center spring	6-35-1 to 6-35-17
Clutch release fork	6-22-1 to 6-22-19
Clutch release fork return spring	6-27-5
Clutch release lever	6-17-3
Clutch release rod	6-24-1 to 6-24-10
Clutch torque shaft	6-52-1 to 6-52-17
Coat hanger hook	23-82-3 to 23-82-39
Coil, ignition	8-35-4 to 8-35-115
Component parts, alternator	8-29-17 to 8-29-208
Component parts, generator	8-29-17 to 8-29-208
Component parts and hot water heater	1-48-1 to 1-48-942
Compressor	24-25-2 to 24-25-260
Condenser	24-27-5
Conditioning, air	24-01-1 to 24-01-65
Connecting rod	9-31-4 to 9-31-10
Connecting rod bearing package	9-32-2
Connection and cable	8-16-1 to 8-16-10
Connector, power brake tube	5-110-18
Control, air conditioning	24-24-5 to 24-24-170
Control, door lock and remote	23-18-5 to 23-18-116
Control, hood lock	15-14-1 to 15-14-21
Control, horn	8-33-4 to 8-33-164
Control, throttle	14-25-5 to 14-25-13
Convertor, torque	9-46-4 to 9-46-228
Core, radiator	7-11-3 to 7-11-4
Countershaft, standard transmission	21-24-2 to 21-24-22
Courtesy lamp	8-11-6 to 8-11-12
Courtesy lamp switch	8-11-6
Courtesy light	1-14-40
Cover, center pillar trim	23-99-4 to 23-99-41
Cover, chain case	9-23-5 to 9-23-40
Cover, front console	23-71-1
Cover, standard steering gear housing	19-04-1 to 19-04-13
Cover, standard transmission case	21-29-3 to 21-29-25
Cover, universal joint	16-07-3 to 16-07-4
Cover, wheelhouse second seat back hinge bracket	23-70-5 to 23-70-19
Cover and tubing, brake	5-53-3 to 5-53-4
Cowl trim panel	23-91-6 to 23-91-20
Cowl vent	23-61-39 to 23-61-116
Crank, throttle control bell	14-14-7 to 14-14-57
Crankcase breather pipe inlet	10-01-21
Crankcase ventilator outlet	10-02-8 to 10-02-67
Crankshaft	9-07-5 to 9-07-22
Crankshaft bearing cap	9-10-2 to 9-10-19
Crankshaft bearing package	9-09-2
Crankshaft rear bearing oil seal	9-11-1 to 9-11-8

MyMopar.com

PART NAME	CODE
Crankshaft sprocket	9-08-5 to 9-08-6
Crankshaft vibration damper	9-13-5
Cross, universal joint	16-08-6 to 16-08-7
Crossmember, frame front	13-11-5
Crossmember, frame engine rear support	9-69-4 to 9-69-6
Crossmember frame rear	13-18-4 to 13-18-32
Cup, master cylinder piston	5-45-8
Cup, wheel cylinder piston	5-71-1 to 5-71-2
Cushion, center seat	23-70-1 to 23-70-22
Cushion, front seat	23-108-4 to 23-108-144
Cylinder, ignition lock	8-35-4 to 8-35-115
Cylinder, master	5-39-1 to 5-39-24
Cylinder, wheel brake	5-64-1 to 5-64-2
Cylinder and keys, lock	23-17-2 to 23-17-72
Cylinder block	9-02-5 to 9-02-16
Cylinder head	9-03-4 to 9-03-29
Cylinder head water outlet elbow	9-05-5 to 9-05-6

D

PART NAME	CODE
Damper, crankshaft vibration	9-13-5
Deck lid	23-19-8 to 23-19-185
Deflector, fuel tank stone	14-87-2
Deflector, radiator stone	7-35-2 to 7-35-20
Differential and carrier rear axle	3-03-1 to 3-03-36
Differential bearing	3-11-1 to 3-11-14
Differential case	3-04-6 to 3-04-10
Differential clutch parts	3-09-1 to 3-09-3
Differential pinion	3-07-1 to 3-07-2
Differential pinion shaft	3-08-1 to 3-08-2
Differential side gear	3-06-5 to 3-06-8
Dimmer, automatic headlamp	1-04-4 to 1-04-18
Directional signal lamp	8-55-1 to 8-55-380
Disc, clutch	6-13-1 to 6-13-8
Distributor, ignition	8-27-1 to 8-27-352
Dome lamp and switch	8-05-6 to 8-05-32
Dome lamp switch	8-05-14
Door	23-11-1 to 23-11-21
Door check	23-10-1 to 23-10-17
Door edge protector	1-135-1
Door hinge	23-15-1 to 23-15-32
Door lock and remote control	23-18-5 to 23-18-116
Door regulator	23-14-10 to 23-14-153
Door remote control handle	23-14-10 to 23-14-153
Door trim panel	23-92-5 to 23-92-25
Drain cock, radiator	7-13-2
Drain trough	23-59-35 to 23-59-61
Drier, receiver	24-26-20 to 24-26-100
Drive gear and pinion set	3-19-1
Drive gear bolt	3-20-1
Drive pinion bearing	3-22-24 to 3-22-45
Drive shaft	3-32-1 to 3-32-9
Drive shaft bearing	3-33-1 to 3-33-8
Drive shaft oil seal	3-35-14
Drum, brake	22-04-2 to 22-04-14

MyMopar.com

PART NAME	CODE
Drum, hub and brake	22-03-1 to 22-03-2
Drum, parking brake	4-01-1 to 4-01-2
E	
Elbow, cylinder head water outlet	9-05-5 to 9-05-6
Elbow, water pump	7-48-22
Electric door lock switch	23-18-103
Electric window regulator	23-41-4 to 23-41-286
Engine	9-01-5 to 9-01-24
Engine front support	9-64-5 to 9-64-25
Engine front support insulator	9-67-4
Engine rear support insulator	9-71-5 to 9-71-19
Evaporator	24-28-3 to 24-28-397
Exhaust pipe	11-05-1 to 11-05-12
Exhaust pipe flange gasket and stud	11-06-2 to 11-06-8
Exhaust valve	9-39-6
Expander, wheel cylinder piston cup	5-72-1
Extension, automatic 3 speed transmission case	21-04-1 to 21-04-12
Extension, standard transmission case	21-04-1 to 21-04-12
F	
Fan	7-02-1 to 7-02-16
Fan and alternator idler pulley	7-04-1 to 7-04-16
Fan and related drive belts	7-03-1
Fan drive and driven pulley	7-06-1 to 7-06-14
Fan fluid drive unit	7-07-1
Fan pulley hub	7-05-1
Fast idle cable	14-24-1 to 14-24-11
Fender, front	12-01-7 to 12-01-106
Fender piller support and cowl bracket	12-05-2
Fender skirt	1-45-1
Filter, fuel	14-67-1 to 14-67-2
Filter, oil	10-26-5 to 10-26-65
Flange, propeller shaft	16-20-1 to 16-20-20
Floor board	23-04-2 to 23-04-250
Floor mat	23-20-8 to 23-20-65
Floor tunnel console	23-38-1 to 23-38-23
Fluid, brake	5-01-2
Flywheel	9-45-1 to 9-45-2
Folding top	23-58-3 to 23-58-607
Folding top bow tacking strip	23-11-37
Folding top dust boot	23-112-12 to 23-112-153
Folding top header outer panel tacking strip retainer	23-111-31 to 23-111-37
Folding top lift switch	23-58-532
Foot, dimmer switch	8-53-150
Fork, clutch release	6-22-1 to 6-22-19
Fork, standard transmission gearshift	21-39-3
Frame	13-01-1 to 13-01-6
Frame engine rear support crossmember	9-69-4 to 9-69-6
Frame engine rear support cross-member bracket	9-70-9
Frame front crossmember	13-11-5
Frame rear crossmember	13-18-4 to 13-18-32
Frame rear spring hanger	13-54-4 to 13-54-15
Fresh air heater control push button switch	1-48-770
Front bumper face bar	13-64-3 to 13-64-150
Front console cover	23-71-1
Front door arm rest	23-76-3 to 23-76-86
Front door automatic lamp switch	8-12-2
Front fender	12-01-7 to 12-01-105
Front fender brace	12-07-1 to 12-07-3
Front fender bracket	12-06-3 to 12-06-6

MyMopar.com

PART NAME	CODE
Front fender moulding	12-15-0
Front fender name plate	12-15-0
Front fender seal	12-02-5 to 12-02-12
Front fender shield	12-04-4 to 12-04-33
Front fender shim	12-02-5 to 12-02-12
Front fender support	12-07-1 to 12-07-3
Front floor carpet	23-79-3
Front seat	23-45-18 to 23-45-56
Front seat adjuster	23-47-6 to 23-47-458
Front seat cushion	23-108-4 to 23-108-144
Front seat cushion to back mounting	23-115-4 to 23-115-10
Front suspension torsion parts	2-14-1 to 2-14-25
Front wheel bearing	22-06-1 to 22-06-18
Front wheel lower control arm	2-10-6 to 2-10-76
Front wheel control arm	2-08-5 to 2-08-72
Fuel filter	14-67-1 to 14-67-2
Fuel line tube	14-89-2 to 14-89-57
Fuel line tube clip	14-90-1
Fuel pump	14-73-1
Fuel pump mounting	14-74-1
Fuel pump push rod	14-77-17
Fuel tank	14-86-1 to 14-86-85
Fuel tank gauge	14-72-1 to 14-72-47
Fuel tank locking cap	1-39-2
Fuel tank stone deflector	14-87-2
Fuel tank support	14-88-8 to 14-88-36
Fuses	8-17-2
G	
Garnish moulding	23-22-7 to 23-22-160
Gasket, manifold	9-50-1 to 9-50-6
Gasket, water pump	7-44-3 to 7-44-4
Gasket and stud, exhaust pipe flange	11-06-2 to 11-06-8
Gauge, fuel tank	14-72-1 to 14-72-47
Gear, differential side	3-06-5 to 3-06-8
Gear, oil pump drive	10-10-1
Gear, power steering	19-01-4 to 19-01-62
Gear, standard steering	19-01-3 to 19-01-24
Gear, standard transmission	21-10-4 to 21-10-16
Gear, standard transmission clutch	21-14-1 to 21-14-20
Gear, standard transmission counter-shaft	21-15-2 to 21-15-33
Gear, standard transmission reverse idler	21-11-1 to 21-11-9
Gearshift, standard transmission remote control	21-42-11 to 21-42-43
Generator	8-28-3 to 8-28-292
Generator component parts	8-29-17 to 8-29-208
Glass channel	23-09-2 to 23-09-75
Glove box	23-06-4 to 23-06-53
Glove compartment lamp socket switch and wire	8-38-23
Glove compartment light	8-38-4 to 8-38-23
Governor	14-68-3 to 14-68-8
Governor, automatic 3 speed transmission	21-138-2 to 21-138-38
Grille, radiator	7-16-11 to 7-16-73
Grille guard	1-01-1
Grommet	8-30-1

MyMopar.com

PART NAME	CODE
Guard, bumper	1-01-1 to 13-68-18
Guard, grille	1-01-1
Guide, brake shoe	5-25-9
H	
Hand brake signal lamp	1-09-1
Handle, door remote control	23-14-10 to 23-14-153
Handle, rear door pull-to	23-81-3 to 23-81-8
Hanger, frame rear spring	13-54-4 to 13-54-15
Head, cylinder	9-03-4 to 9-03-29
Headlamp	8-34-1 to 8-34-374
Headlamp and instrument lamp switch	8-53-270
Headlamp beam indicator light	8-39-15
Headlining and listing	23-86-3 to 23-86-36
Heater and component parts, hot water	1-48-1 to 1-48-942
Hinge, door	23-15-1 to 23-15-32
Hinge, hood	15-19-2 to 15-19-40
Hood bumper	15-09-4 to 15-09-22
Hood hinge	15-19-2 to 15-19-40
Hood letters	15-06-0
Hood lock	15-11-3 to 15-11-58
Hood lock control	15-14-1 to 15-14-21
Hood lock striker	15-13-2 to 15-13-6
Hood medallion	15-06-0
Hood moulding	15-25-6
Hood name plate	15-06-0
Hood top panel	15-03-3 to 15-03-60
Hook, coat hanger	23-82-3 to 23-82-39
Horn	8-32-2 to 8-32-18
Horn control	8-33-4 to 8-33-164
Horn switch	8-33-90
Hose, brake flexible	5-62-1 to 5-62-20
Hose, power brake vacuum	5-111-17
Hose, power steering gear	19-58-7 to 19-58-31
Hose, radiator	7-14-4 to 7-14-31
Hot water heater and component parts	1-48-1 to 1-48-942
Housing, clutch	6-09-1 to 6-09-11
Housing, power steering gear	19-02-4 to 19-02-69
Housing, rear axle	3-02-1 to 3-02-20
Housing, standard steering gear	19-02-4 to 19-02-18
Housing, water pump	7-43-1 to 7-43-8
Hub, fan pulley	7-05-1
Hub, wheel	22-05-14 to 22-05-24
Hub and brake drum	22-03-1 to 22-03-2
Hub cap	22-08-5 to 22-08-57
I	
Ignition	8-36-1 to 8-36-137
Ignition coil	8-35-4 to 8-35-115
Ignition distributor	8-27-1 to 8-27-352
Ignition lamp	8-40-8
Ignition lock cylinder	8-35-4 to 8-35-115
Impeller, water pump	7-45-3 to 7-45-31
Indicator, oil level	10-03-4 to 10-03-7
Inlet, crankcase breather pipe	10-01-21
Instrument panel	23-33-10 to 23-33-247
Instrument panel instruments	8-37-1 to 8-37-517

MyMopar.com

PART NAME	CODE
Instrument panel light	8-41-35 to 8-41-65
Instrument panel wiring	8-19-2 to 8-19-87
Instrument trim pad	23-84-3 to 23-84-31
Instruments, instrument panel	8-37-1 to 8-37-459
Insulator, body	23-31-33 to 23-31-205
Insulator, engine front support	9-67-4
Insulator, engine rear support	9-71-5 to 9-71-19
Insulator, propellor shaft center bearing housing	16-17-1
Intake, air	23-61-39 to 23-61-116
Intake valve	9-39-5
J	
Jack, bumper	13-72-1 to 13-72-4
Jacket, power steering gear column	19-14-1 to 19-14-72
Jacket, standard steering gear column	19-14-1 to 19-14-72
Joint, universal	16-03-1 to 16-03-20
K	
Keys and cylinder, lock	23-17-2 to 23-17-72
Knuckle, steering	2-03-3
L	
Lamp, back-up	1-10-1 8-56-1 to 8-56-75
Lamp, courtesy	8-11-6 to 8-11-12
Lamp, directional signal	8-55-1 to 8-55-380
Lamp, hand brake signal	1-09-1
Lamp, ignition	8-40-8
Lamp, license plate	8-57-7 to 8-57-109
Lamp, map	8-42-2 to 8-42-31
Lamp, parking and directional	8-50-82 to 8-50-349
Lamp, parking brake signal	8-31-2 to 8-31-16
Lamp, quarter	8-11-6 to 8-11-12
Lamp, stop	8-58-60 to 8-58-61
Lamp, tail and stop	8-55-1 to 8-55-335
Lamp, trunk	8-13-1 to 8-13-6
Lamp, Trunk compartment	1-30-3
Lamp and switch, dome	8-05-6 to 8-05-32
Leaf, rear spring	17-12-4 to 17-12-12
Letters, hood	15-06-0
Leveler, load	1-07-1
Lever, automatic 3 speed transmission control	21-142-12 to 21-142-21
Lever, clutch release	6-17-3
Lever, parking brake	4-25-1 to 4-25-21
Lever, parking brake (hand operated)	4-08-1 to 4-08-36
Lever, parking brake operating	4-26-1 to 4-26-28
Lever, standard transmission gearshift	21-30-2 to 21-30-438
License mounting parts	8-47-8 to 8-47-131
License plate lamp	8-57-7 to 8-57-109
Lid, deck	23-19-8 to 23-19-185
Lift, window (electric)	23-41-4 to 23-41-286
Lift, window (manual)	23-39-2 to 23-39-53
Light, courtesy	1-14-40
Light, glove compartment	8-38-4 to 8-38-23
Light, headlamp beam indicator	8-39-15
Light, instrument panel	8-41-35 to 8-41-65
Light, map	1-14-40

MyMopar.com

PART NAME	CODE
Light, underhood	1-13-1 to 1-13-13
Light, warning	1-06-1 to 1-06-14
Lighter, cigar	1-12-0 8-20-3 to 8-20-16
Liner, body	23-31-33 to 23-31-205
Lining, luggage compartment front	23-96-3 to 23-96-41
Lining and shoe, wheel brake	5-03-1 to 5-03-23
Listing and headlining	23-86-3 to 23-86-36
Load Leveler	1-07-1
Lock, child guard rear door safety	1-72-5
Lock, hood	5-11-3 to 5-11-58
Lock, safe-T-matic door	23-13-0
Lock, transmission parking	4-10-1 to 4-10-28
Lock cylinder and keys	23-17-2 to 23-17-72
Low oil pressure switch	8-53-327
Luggage compartment from lining	23-96-3 to 23-96-41

M

Manifold	9-48-6 to 9-46-138
Manifold gasket	9-50-1 to 9-50-6
Manifold heat control valve	9-59-13 to 9-59-15
Manifold heat control valve stop	9-62-1
Manifold heat control valve thermostat	9-58-1 to 9-58-14
Map lamp	8-42-2 to 8-42-31
Map lamp switch	8-42-25
Map light	1-14-40
Master cylinder	5-39-1 to 5-39-24
Master cylinder boot	5-40-1
Master cylinder brake tube	5-52-3 to 5-52-62
Master cylinder piston	5-44-8 to 5-44-9
Master cylinder piston cup	5-45-8
Master cylinder piston push rod	5-47-4
Master cylinder piston return spring	5-46-1
Master cylinder valve	5-43-1 to 5-43-5
Mat, floor	23-20-8 to 23-20-65
Material, seat cloth trim	23-114-2 to 23-114-15
Medallion, hood	15-06-0
Medallion radiator grille	7-17-2 to 7-17-21
Mirror	1-76-1 to 1-76-3 23-21-3 to 23-21-74
Motor, starting	8-52-4 to 8-52-375
Moulding, front fender	12-15-0
Moulding, garnish	23-22-7 to 23-22-160
Moulding, hood	15-25-6
Moulding, outside finish	23-23-41 to 23-23-80
Moulding, trim finish	23-26-2 to 23-26-80
Mounting, fuel pump	14-74-1
Mounting parts, license	8-47-8 to 8-47-131
Muffler	11-01-1
Muffler support	11-02-1 to 11-02-4

N

Name Plate, front fender	12-15-0
Nipple, water pump	7-48-22
Nut, front seat cushion to back mounting	23-115-4 to 23-115-10

O

Oil filter	10-26-5 to 10-26-65
Oil pump	10-07-2 to 10-07-14
Oil level indicator	10-03-4 to 10-03-7
Oil pan	10-24-1 to 10-24-38

MyMopar.com

PART NAME	CODE
Oil pressure relief valve	10-22-11 to 10-22-41
Oil pump drive gear	10-10-1
Oil pump drive shaft	10-09-1 to 10-09-7
Oil pump rotor	10-14-18
Oil strainer	10-23-7
Ornament radiator grille	7-17-2 to 7-17-21
Outlet, crankcase ventilator	10-02-8 to 10-02-67
Outside finish moulding	23-23-2 to 23-23-80
P	
Package, automatic 3 speed transmission	21-01-3
Package, propeller shaft yoke	16-20-1 to 16-20-20
Package, standard transmission	21-01-3
Package, wheel cylinder service	5-63-1 to 5-63-3
Pad, body	23-31-33 to 23-31-205
Pad, brake pedal	5-28-8
Pad, clutch pedal	6-39-2
Pad, instrument trim	23-84-3 to 23-84-31
Pan, automatic 3 speed transmission oil	21-119-3 to 21-119-25
Pan, body	23-32-8 to 23-32-115
Pan, clutch housing	6-10-2 to 6-10-31
Pan, oil	10-24-1 to 10-24-38
Panel, body	23-34-13 to 23-34-354
Panel, cowl trim	23-91-6 to 23-91-20
Panel, door trim	23-92-5 to 23-92-25
Panel, hood top	15-03-3 to 15-03-60
Panel, instrument	23-33-10 to 23-33-247
Panel, rear quarter trim	23-101-3 to 23-101-32
Panel, rear seat shelf	23-102-3
Panel, rear upper pillar reinforcement trim	23-99-4 to 23-99-41
Panel, shelf trim	23-102-3
Panel, visor trim	23-103-3 to 23-103-48
Parking and directional lamp	8-50-82 to 8-50-349
Parking brake adjuster	4-07-1 to 4-07-28
Parking brake band	4-03-1 to 4-03-11
Parking brake cable	4-23-1 to 4-23-51
Parking brake drum	4-01-1 to 4-01-2
Parking brake indicator lamp switch	3-31-10
Parking brake lever (hand operated)	4-08-1 to 4-08-36
Parking brake lever (foot operated)	4-25-1 to 4-25-21
Parking brake lever pawl	4-13-6 to 4-13-10
Parking brake lever return spring	4-19-1
Parking brake operating lever	4-26-1 to 4-26-28
Parking brake shoe	4-03-1 to 4-03-11
Parking brake shoe anchor	4-06-1 to 4-06-11
Parking brake signal lamp	8-31-2 to 8-31-18
Parking brake support	4-29-1 to 4-29-16
Parts, differential clutch	3-09-1 to 3-09-3
Pawl, parking brake lever	4-13-6 to 4-13-10
Pedal, accelerator	14-01-1 to 14-01-31
Pedal, clutch	6-38-1 to 6-38-26
Pedal and bushing, brake	5-27-1 to 5-27-21
Pillar, body	23-36-5 to 23-36-134

MyMopar.com

PART NAME	CODE
Pilot, automatic	14-02-1 to 14-02-68
Pin, piston	9-36-5 to 9-36-7
Pinion, automatic 3 speed transmission speedometer	21-85-5 to 21-85-61
Pinion, differential	3-07-1 to 3-07-2
Pinion, standard transmission main drive	21-09-2 to 21-09-33
Pinion, standard transmission speedometer	21-85-5 to 21-85-61
Pipe, exhaust	11-05-1 to 11-05-12
Pipe, tail	11-09-3
Piston, master cylinder	5-44-8 to 5-44-9
Piston, power steering gear	19-56-6 to 19-56-90
Piston, wheel cylinder	5-70-1
Piston, w/pin	9-34-5
Piston pin	9-36-5 to 9-36-7
Piston ring set	9-35-1
Plate, clutch cover and pressure	6-14-1 to 6-14-10
Plate, clutch pressure	6-15-1
Plate, hood name	15-06-0
Plug, body	23-32-8 to 23-32-115
Power brake	1-42-1
Power brake air cleaner	5-113-17
Power brake hose clamp	5-112-1
Power brake power unit	5-100-1 to 5-100-210
Power brake tube connector	5-110-18
Power brake vacuum check valve	5-105-1
Power brake vacuum hose	5-111-17
Power brake vacuum tank	5-102-2 to 5-102-11
Power steering gear	19-01-4 to 19-01-62
Power steering column bracket	19-31-1 to 19-31-38
Power steering gear arm	19-27-2 to 19-27-55
Power steering gear column jacket	19-14-1 to 19-14-72
Power steering gear hose	19-58-7 to 19-58-31
Power steering gear housing	19-02-4 to 19-02-69
Power steering gear idler arm	19-27-2 to 19-27-55
Power steering gear piston	19-56-6 to 19-56-90
Power steering gear shaft and roller tooth	19-19-1 to 19-19-72
Power steering gear tube and coupling	19-15-4 to 19-15-69
Power steering gear valve	19-57-1 to 19-57-64
Power steering gearshift control rod	19-48-1 to 19-48-52
Power steering gearshift rod	19-46-3 to 19-46-55
Power steering gearshift tube	19-46-3 to 19-46-55
Power steering oil pump	19-54-2 to 19-54-258
Power steering wheel	19-30-4 to 19-30-18
Propeller shaft	16-02-1 to 16-02-5
Propeller shaft center bearing	16-16-1 to 16-16-47
Propeller shaft center bearing housing insulator	16-17-1
Propeller shaft flange	16-20-1 to 16-20-8
Propeller shaft sliding yoke	16-14-1 to 16-14-9
Propeller shaft spline	16-14-1 to 16-14-9
Protector, door edge	1-135-1
Pulley, fan and alternator idler	7-04-1 to 7-04-16
Pulley, fan drive and driven	7-06-1 to 7-06-14
Pump, automatic 3 speed transmission oil	21-118-6 to 21-118-57
Pump, fuel	14-73-1
Pump, oil	10-07-2 to 10-07-14
Pump, power steering oil	19-54-2 to 19-54-258

MyMopar.com

PART NAME	CODE
Pump, water	7-42-1 to 7-42-4
Push button vacuum switch	24-24-150
Q	
Quarter lamp	8-11-6 to 8-11-12
Quarter lamp switch	8-11-6
Quarter window opening weathercord	23-113-2 to 23-113-87
R	
Rack, roof luggage	1-74-1
Rack, roof rail and luggage	23-40-82 to 23-40-190
Radiator core	7-11-3 to 7-11-4
Radiator core fan shroud	7-08-2 to 7-08-16
Radiator cross bar	7-33-1 to 7-33-12
Radiator drain cock	7-13-2
Radiator dust shield	7-31-2 to 7-31-45
Radiator filler cap	7-12-1
Radiator grille	7-16-11 to 7-16-73
Radiator grille medallion	7-17-2 to 7-17-21
Radiator hose	7-14-4 to 7-14-31
Radiator grille ornament	7-17-2 to 7-17-21
Radiator stone deflector	7-35-2 to 7-35-20
Radiator yoke	7-26-2 to 7-26-37
Radio	1-87-2 to 1-87-464
Radio antenna	1-88-1 to 1-88-206
Radio power antenna switch	1-88-205
Rail standard transmission gearshift	21-34-42 to 21-34-47
Rear axle control strut	3-01-25 to 3-01-35
Rear axle differential and carrier	3-03-1 to 3-03-36
Rear axle housing	3-02-1 to 3-02-20
Rear bumper face bar	13-66-3 to 13-66-147
Rear door pull-to handle	23-81-3 to 23-81-8
Rear quarter trim panel	23-101-3 to 23-101-32
Rear seat back	23-109-3 to 23-109-40
Rear seat shelf panel	23-102-3
Rear shelf radio switch	1-87-289
Rear spring	17-11-1 to 17-11-10
Rear spring bumper	17-19-3 to 17-19-20
Rear spring center bolt	17-14-10
Rear spring clip	17-15-1 to 17-15-30
Rear spring leaf	17-12-4 to 17-12-12
Rear spring shackle	17-16-1 to 17-16-8
Rear spring silent block	17-17-3 to 17-17-5
Rear upper pillar reinforcement trim panel	23-99-4 to 23-99-41
Rear window defogger switch	1-48-300
Rear window defogger switch package	1-48-299
Receiver, ash	23-02-1 to 23-02-150
Receiver drier	24-26-20 to 24-26-100
Regulator, door	23-14-10 to 23-14-153
Regulator, electric window	23-41-4 to 23-41-286
Reinforcement, body	23-07-168 to 23-07-169
Retainer, folding top header outer panel tacking strip	23-111-37 to 23-111-37
Rocker, valve	9-43-1 to 9-43-26
Rod, accelerator pedal to accelerator shaft.	14-07-1 to 14-07-15
Rod, clutch pedal	6-50-1 to 6-50-34

MyMopar.com

PART NAME	CODE
Rod, clutch release	6-24-1 to 6-24-10
Rod, connecting	9-31-4 to 9-31-10
Rod, fuel pump push	14-77-17
Rod, master cylinder piston push rod	5-47-4 to 5-47-10
Rod, power steering gearshift	19-46-3 to 19-46-55
Rod, power steering gearshift control	19-48-1 to 19-48-52
Rod, standard steering gearshift	19-46-3 to 19-46-55
Rod, standard steering gearshift control	19-48-1 to 19-48-52
Rod, standard transmission gearshift	21-30-2 to 21-30-438
Rod, steering knuckle tie	2-07-1 to 2-07-41
Rod, throttle lever	14-15-3 to 14-15-10
Rod, valve push	9-42-1
Rod, wheel cylinder piston push	5-12-1
Roller and bushing, universal cross	16-10-1 to 16-10-3
Roof luggage rack	1-74-1
Roof rail and luggage rack	23-40-82 to 23-40-190
Rotor, oil pump	10-14-18
Run, window glass	23-42-13 to 23-42-59

S

PART NAME	CODE
Safe-T-Matic door lock	23-13-0
Screen, tailgate window	1-08-1
Screw, wheel cylinder bleeder	5-67-1
Seal, body	23-31-33 to 23-31-205
Seal, crankshaft rear bearing oil	9-11-1 to 9-11-8
Seal, drive shaft oil	3-35-14
Seal, front fender	12-02-5 to 12-02-12
Seal, standard transmission main shaft oil	21-22-2
Seal, water pump	7-46-1
Seal, wheel brake adjusting cam dust shield	5-22-8
Seat cloth trim material	23-114-2 to 23-114-15
Seat, front	23-45-18 to 23-45-56
Seat, second	23-48-6 to 23-48-189
Seat, third	23-48-6 to 23-48-189
Seat belt	1-67-1 to 1-67-9
Seat belt package	1-67-1
Seat spring	23-52-1 to 23-52-15
Second seat	23-48-6 to 23-48-189
Service parts and carburetor assemblies	14-30-1 14-30-2 14-30-4 14-30-7 14-30-8 14-30-27 14-30-28 14-35-1 14-35-6 14-35-8 14-39-45 14-41-3 14-43-5
Servos, automatic 3 speed transmission	21-137-5 to 21-137-205
Set, automatic 3 speed transmission	21-01-3
Set, drive gear and pinion	3-19-1
Set, piston ring	9-35-1
Set, standard transmission	21-01-3
Shackle, rear spring	17-16-1
Shaft, accelerator	14-11-1 to 14-11-48
Shaft, automatic 3 speed transmission	21-05-1 to 21-05-35
Shaft, automatic 3 speed transmission input	21-129-5 to 21-129-24
Shaft, automatic 3 speed transmission torque converter reaction	21-129-5 to 21-129-24
Shaft, brake pedal	5-29-1
Shaft, clutch pedal	6-43-7 to 6-43-13
Shaft, clutch torque	6-52-1 to 6-52-17
Shaft, differential pinion	3-08-1 to 3-08-2
Shaft, drive	3-32-1 to 3-32-9

MyMopar.com

PART NAME	CODE
Shaft, oil pump drive	10-09-1 to 10-09-7
Shaft, propeller	16-02-1 to 16-02-5
Shaft, standard transmission main	21-16-3
Shaft, standard transmission reverse idler	21-12-1 to 21-12-2
Shaft, sway eliminator	17-29-5 to 17-29-21
Shaft, water pump	7-45-3 to 7-45-31
Shelf trim panel	23-102-3
Shield, battery heat	13-35-1
Shield, front fender	12-04-4 to 12-04-33
Shield, radiator dust	7-31-2 to 7-31-45
Shield, wheel brake dust	5-16-1
Shim, front fender	12-02-5 to 12-02-12
Shock absorber	17-23-3 to 17-23-57
Shock absorber bracket	17-24-3 to 17-24-28
Shoe, parking brake	4-03-1 to 4-03-11
Shoe and lining, wheel brake	5-03-1 to 5-03-23
Shroud, radiator core fan	7-08-2 to 7-08-16
Side sill and belt bar	23-51-3 to 23-51-45
Skirt, fender	1-45-1
Spacer, rear door pull-to handle	23-81-3 to 23-81-8
Spare wheel carrier	22-20-29 to 22-20-89
Spline, propeller shaft	16-14-1 to 16-14-9
Spotlight	1-108-1 to 1-108-49
Spring, accelerator pedal return	14-06-1 to 14-06-10
Spring, brake pedal return	5-34-1 to 5-34-6
Spring, carburetor lever return	14-08-36 to 14-08-37
Spring, clutch pressure	6-16-1
Spring, clutch release bearing return	6-20-14
Spring, clutch release center	6-35-1 to 6-35-17
Spring, clutch release fork return	6-27-5
Spring, master cylinder piston return	5-46-1
Spring, parking brake lever return	4-19-1
Spring, rear	17-11-1 to 17-11-10
Spring, seat	23-52-1 to 23-52-15
Sprocket, camshaft	9-17-5 to 9-17-13
Sprocket, crankshaft	9-08-5
Standard steering column bracket	19-31-1 to 19-31-24
Standard steering gear	19-01-3 to 19-01-24
Standard steering gear arm	19-27-2 to 19-27-55
Standard steering gear column jacket	19-14-1 to 19-14-72
Standard steering gear housing	19-02-4 to 19-02-18
Standard steering gear housing cover	19-04-1 to 19-04-13
Standard steering gear idler arm	19-27-2 to 19-27-55
Standard steering gear shaft and roller tooth	19-19-4 to 19-19-70
Standard steering gear tube and coupling	19-15-4 to 19-15-111
Standard steering gearshift control rod	19-48-1 to 19-48-52
Standard steering gearshift rod	19-46-3 to 19-46-55
Standard steering gearshift tube	19-46-3 to 19-46-55
Standard steering wheel	19-30-4 to 19-30-18
Standard transmission	21-02-1 to 21-02-6
Standard transmission case	21-03-1 to 21-03-25 21-29-3 to 21-29-25
Standard transmission case extension	21-04-1 to 21-04-12

MyMopar.com

PART NAME	CODE
Standard transmission clutch gear	21-14-1 to 21-14-20
Standard transmission countershaft	21-24-2 to 21-24-22
Standard transmission countershaft bearing	21-25-2 to 21-25-6
Standard transmission countershaft gear	21-15-2 to 21-15-33
Standard transmission gear	21-10-4 to 21-10-16
Standard transmission gearshift fork	21-39-3
Standard transmission gearshift lever and rod	21-30-2 to 21-30-438
Standard transmission gearshift rail	21-34-42 to 21-34-47
Standard transmission main drive pinion	21-09-2 to 21-09-33
Standard transmission main shaft	21-16-3
Standard transmission main shaft bearing	21-19-2 to 21-19-15
Standard transmission main shaft bearing oil seal	21-22-2
Standard transmission main shaft pilot bearing	21-17-2 to 21-17-9
Standard transmission package	21-01-3
Standard transmission remote control	21-42-11 to 21-42-43
Standard transmission reverse idler gear	21-11-1 to 21-11-9
Standard transmission reverse idler gear shaft	21-12-1 to 21-12-2
Standard transmission set	21-01-3
Standard transmission speedometer cable, shaft and housing	21-84-1 to 21-84-28
Standard transmission speedometer pinion	21-85-4 to 21-85-61
Starter and ignition switch	8-35-59
Starting motor	8-52-4 to 8-52-389
Steering knuckle	2-03-3
Steering knuckle tie rod	2-07-1 to 2-07-41
Steering linkage knuckle arm	2-05-4
Stop, brake pedal	5-30-12
Stop, manifold heat control valve	9-62-1
Stop and tail lamp	8-55-1 to 8-55-380
Stop lamp	8-58-60 to 8-58-61
Stop lamp switch	8-58-60
Strainer, automatic 3 speed transmission oil pump	21-117-1 to 21-117-3
Strainer, oil	10-23-7
Strap, assist	23-77-3 to 23-77-17
Strap, battery hold-down	13-34-3
Striker, body	23-08-13 to 23-08-76
Striker, hood lock	15-13-2 to 15-13-6
Strip, folding top bow tacking	23-111-37
Strut, rear axle control	3-01-25 to 3-01-35
Stud, battery hold-down	13-36-5
Stud, throttle linkage ball	14-13-1 to 14-13-5
Stud and gasket, exhaust pipe flange	11-06-2 to 11-06-8
Support, engine front	9-64-5 to 9-64-25
Support, front fender	12-07-1 to 12-07-3
Support, fuel tank	14-88-8 to 14-88-36
Support, muffler	11-02-1 to 11-02-4
Support, parking brake	4-29-1 to 4-29-16
Support, tail pipe	11-10-3 to 11-10-42
Support, wheel brake	5-13-1 to 5-13-35
Sway eliminator shaft	17-29-5 to 17-29-21
Switch, automatic door lamp	8-12-1 to 8-12-3
Switch, automatic 3 speed transmission neutral starter switch	21-113-24 to 21-113-29
Switch, back-up lamp	8-56-2
Switch, blower	24-24-5
Switch, brake, mechanical	14-02-32
Switch, courtesy lamp	8-11-6
Switch, dome lamp	8-05-14
Switch, electric door lock	23-18-103
Switch, folding top lift	23-58-532
Switch, foot dimmer	8-53-150

MyMopar.com

PART NAME	CODE
Switch, fresh air heater control push button	1-48-770
Switch, front door automatic lamp	8-12-2
Switch, headlamp and instrument lamp	8-53-270
Switch, horn	8-33-90
Switch, low oil pressure	8-53-327
Switch, map lamp	8-42-25
Switch, parking brake indicator lamp	8-31-10
Switch, push button vacuum	24-24-150
Switch, quarter lamp	8-11-6
Switch, radio power antenna	1-88-205
Switch, rear shelf radio	1-87-289
Switch, rear window deffogger	1-48-300
Switch, starter and ignition	8-35-59
Switch, stop lamp	8-58-60
Switch, tailgate electric window lift	23-54-167
Switch, trunk compartment trunk	1-30-3
Switch, trunk lamp	8-13-2
Switch, turn signal	8-50-82
Switch, turn signal actuating	8-50-98
Switch, underhood light	1-13-10
Switch, windshield washer	1-82-14
Switch, windshield wiper	23-67-160
Switch and bracket, turn signal cancelling	8-50-125
Switch and cable, turn signal electric	8-50-82
Switch and wire glove compartment lamp socket	8-38-23
Switch package, automatic 3 speed transmission	21-113-24
Switch package, rear window deffogger	1-48-299
Switch package, window safety	1-50-1
Switches	8-53-150 to 8-53-327

T

PART NAME	CODE
Tail and stop lamp	8-55-1 to 8-55-380
Tail pipe	11-09-3
Tail pipe support	11-10-3 to 11-10-42
Tailgate	23-54-1 to 23-54-207
Tailgate electric window lift switch	23-54-167
Tailgate window screen	1-08-1
Tank, fuel	14-86-1 to 14-86-85
Tank, power brake vacuum	5-102-2 to 5-102-11
Tappet, valve	9-41-1 to 9-41-4
Tee, brake tube	5-58-1 to 5-58-2
Terminal block	8-21-1
Thermostat	7-41-4
Thermostat manifold heat control valve	9-58-1 to 9-58-14
Third seat	23-48-6 to 23-48-189
Throttle control	14-25-5 to 14-25-13
Throttle control bell crank	14-14-1 to 14-14-57
Throttle control cable mounting bracket	14-26-2 to 14-26-9
Throttle lever rod	14-15-3 to 14-15-10
Throttle linkage ball stud	14-13-1 to 14-13-5
Timing chain	9-20-1
Tooth, power steering gear shaft and roller	19-19-1 to 19-19-72
Tooth, standard steering gear shaft and roller	19-19-4 to 19-19-70
Top, folding	23-58-3 to 23-58-607
Torque converter	9-46-4 to 9-46-228
Torsion parts, front suspension	2-14-1 to 2-14-25
Transmission, automatic 3 speed	21-02-1
Transmission, standard	21-02-1 to 21-02-6
Transmission parking lock	4-10-1 to 4-10-28
Tray, battery support	13-33-61 to 13-33-68
Trim finish moulding	23-26-2 to 23-26-89
Trough, drain	23-59-35 to 23-59-61
Trunk compartment lamp	1-30-3
Trunk compartment lamp switch	1-30-3
Trunk lamp	8-13-1 to 8-13-6
Trunk lamp switch	8-13-2
Tube, fuel line	14-89-2 to 14-89-57
Tube, master cylinder brake tube	5-52-3 to 5-52-62
Tube, power steering gearshift	19-46-3 to 19-46-55
Tube, standard steering gearshift	19-46-3 to 19-46-55
Tube, wheel cylinder connecting	5-55-1

MyMopar.com

PART NAME	CODE
Tube and coupling, power steering gear	19-15-4 to 19-15-69
Tube and coupling, standard steering gear	19-15-4 to 19-15-111
Tubing and cover, brake	5-53-3 to 5-53-4
Tufting buttons	23-78-2
Turn signal actuating switch	8-50-98
Turn signal cancelling switch and bracket	8-50-125
Turn signal electric switch and cable	8-50-82
Turn signal switch	8-50-82

U

Underhood light	1-13-1 to 1-13-13
Underhood light switch	1-13-10
Unit, fan fluid drive	7-07-1
Unit, power brake power	5-100-1 to 5-100-209
Universal cross roller and bushing	16-10-1 to 16-10-3
Universal joint	16-03-1 to 16-03-20
Universal joint body	16-04-1
Universal joint centering button	16-06-1 to 16-06-3
Universal joint cover	16-07-3 to 16-07-4
Universal joint cross	16-08-6 to 16-08-7

V

Valve	9-39-1 to 9-39-21
Valve, exhaust	9-39-6
Valve, intake	9-39-5
Valve, manifold heat control	9-59-13 to 9-59-15
Valve, master cylinder	5-43-1 to 5-43-5
Valve, oil pressure relief	10-22-11 to 10-22-41
Valve, power brake vacuum check	5-105-1
Valve, power steering gear	19-57-1 to 19-57-64
Valve body and valves, automatic 3 speed transmission	21-139-4 to 21-139-193
Valve push rod	9-42-1
Valve rocker	9-43-1 to 9-43-26
Valve tappet	9-41-1 to 9-41-4
Vent, cowl	23-61-39 to 23-61-116
Vent wing	23-64-4 to 23-64-314
Visor	1-32-2
Visot trim panel	23-103-3 to 23-103-48

W

Warning light	1-06-1 to 1-06-14
Washer, windshield	1-82-2 to 1-82-49
Water pump	7-42-1 to 7-42-4
Water pump elbow	7-48-22
Water pump gasket	7-44-3 to 7-44-4
Water pump housing	7-43-1 to 7-43-8
Water pump impeller	7-45-3 to 7-45-31
Water pump nipple	7-48-22
Water pump seal	7-46-1
Water pump shaft	7-45-3 to 7-45-31
Weathercord, quarter window opening	23-113-2 to 23-113-87
Weatherstrip	23-63-14 to 23-63-181
Weight, wheel balance	22-09-1
Wheel	22-01-5 to 22-01-51
Wheel, power steering	19-30-4 to 19-30-18
Wheel, standard steering	19-30-4 to 19-30-18
Wheel balance weight	22-09-1
Wheel brake adjuster	5-20-1 to 5-20-20
Wheel brake adjusting cam dust shield seal	5-22-8
Wheel brake cylinder	5-64-1 to 5-64-2
Wheel brake dust shield	5-16-1

MyMopar.com

PART NAME	CODE
Wheel brake shoe and lining	5-03-1 to 5-03-23
Wheel brake shoe guide spring	5-26-1 to 5-26-5
Wheel brake shoe hold-down spring	5-26-1 to 5-26-5
Wheel brake support	5-13-1 to 5-13-35
Wheel cylinder bleeder screw	5-67-1
Wheel cylinder boot	5-69-1
Wheel cylinder connecting tube	5-55-1
Wheel cylinder piston	5-70-1
Wheel cylinder piston cup	5-71-1 to 5-71-2
Wheel cylinder piston cup expander	5-72-1
Wheel cylinder piston push rod	5-12-1
Wheel cylinder service package	5-63-1 to 5-63-3
Wheel hub	22-05-14 to 22-05-24
Wheelhouse second seat back hinge bracket	23-70-5 to 23-70-19
Window	23-64-4 to 23-64-314
Window glass run	23-42-13 to 23-42-59
Window lift (electric)	23-41-4 to 23-41-286
Window lift (manual)	23-39-2 to 23-39-53
Window safety switch	1-50-1
Window safety switch package	1-50-1
Windshield	23-66-65 to 23-66-239
Windshield washer	1-82-2 to 1-82-49
Windshield washer switch	1-82-14
Windshield wiper	23-67-5 to 23-67-204
Windshield wiper switch	23-67-160
Wing, vent	23-64-4 to 23-64-314
Wiper, windshield	23-67-5 to 23-67-204
Wiring, chassis and body	8-15-2 to 8-15-53
Wiring, instrument panel	8-19-2 to 8-19-87

Y

PART NAME	CODE
Yoke, propeller shaft	16-20-1 to 16-20-20
Yoke, propeller shaft sliding	16-14-1 to 16-14-9
Yoke, radiator	7-26-2 to 7-26-37

NOTES

MyMopar.com

NUMERICAL INDEX

PART NUMBER	CODE
Standard Parts not listed in this index.	
50 082.	9-05-6
50 652.	3-32-6
53 298.	9-07-12
53 553.	3-32-5
106 650.	8-17-2
106 653.	8-17-2
106 671.	16-14-1
117 142.	8-17-2
120 114.	8-17-2
120 151.	8-17-2
120 369.	5-13-10
126 049.	8-17-2
127 934.	8-44-1
128 025.	2-08-68
128 027.	2-08-68
	5-13-10
128 980.	22-20-87
131 282.	8-44-1
142 450.	8-44-1
142 451.	8-44-1
142 453.	8-44-1
142 456.	8-44-1
142 864.	8-17-2
145 032.	19-30-18
147 682.	8-17-2
147 683.	8-17-2
147 684.	8-17-2
147 685.	8-17-2
147 686.	8-17-2
148 086.	8-17-2
149 559.	8-17-2
150 836.	8-17-2
150 866.	8-17-2
151 567.	8-44-1
151 576.	8-44-1
151 577.	8-44-1
151 578.	8-44-1
152 191.	9-08-6
152 229.	3-08-2
152 240.	8-44-1
152 244.	8-44-1
152 280.	8-44-1
162 090.	23-76-3
164 042.	23-06-21
167 079.	23-36-134
179 355.	8-34-96
181 055.	8-47-14
271 506.	8-52-6
272 314.	5-13-10
273 703.	3-32-9
273 705.	2-08-68
274 004.	8-44-1
274 108.	8-34-96
274 461.	14-67-2
	14-89-57
307 555.	6-14-10
308 247.	3-11-14
314 926.	6-14-10
314 948.	3-03-8
327 072.	13-64-150
381 875.	9-39-17
385 532.	8-39-16
	8-40-17
	8-41-37
	8-41-65
	8-50-157
391 888.	21-30-426
445 247.	23-06-15
445 635.	8-17-2
448 797.	5-112-1
455 866.	9-11-8
562 704.	19-02-18
566 170.	19-02-18
574 812.	13-64-6
579 445.	16-03-7
600 072.	5-26-2
600 073.	5-26-2
600 194.	22-06-14
601 014.	5-13-10
601 108.	21-17-7
601 864.	3-11-13
602 820.	16-03-19
605 004.	16-03-16
608 240.	4-23-24
611 898.	8-16-8
618 621.	10-22-40
618 622.	10-22-41
620 180.	19-04-13
620 181.	19-04-13
620 521.	21-19-2
623 207.	8-27-114
629 768.	16-06-1
631 217.	19-48-21
	21-30-426
631 809.	21-19-15
631 810.	21-19-15
631 823.	21-09-23
	21-14-20
	21-19-15
631 824.	21-09-23
	21-14-20
	21-19-15
631 825.	21-09-23
	21-14-20
	21-19-15
631 877.	21-09-25
633 238.	6-22-15
636 841.	8-52-139
638 637.	16-03-3
639 173.	14-24-9
639 174.	14-24-11
640 086.	19-15-60
640 280.	16-16-25
	21-19-15
640 331.	21-19-15
640 332.	21-09-23
	21-14-20
	21-19-15
643 899.	8-27-296
652 970.	4-26-19
658 998.	6-19-3
660 146.	6-13-8
663 480.	3-08-1
665 151.	8-16-10
666 790.	14-14-5
	24-28-72
666 924.	21-11-9
666 927.	21-11-2
	21-25-2
667 774.	14-11-3
	14-14-5
670 775.	9-46-228
	21-136-235
671 915.	6-20-14
672 709.	21-09-33
681 135.	23-36-123
681 320.	3-33-4
681 322.	3-33-4
683 057.	9-62-1
688 900.	11-10-26
697 812.	21-25-4
697 814.	4-26-11
698 399.	3-33-2
698 400.	3-33-1
698 403.	3-11-2
698 404.	3-11-1
729 152.	8-47-126
	23-06-14
	23-34-170
849 517.	23-18-21
852 454.	4-26-2
855 519.	6-15-1
855 521.	6-16-1
857 999.	16-08-6
858 006.	16-10-2
858 245.	8-13-5
	8-41-38
859 882.	6-13-4
861 386.	23-51-6
862 173.	21-17-7
863 986.	21-119-11
863 987.	21-119-12
864 397.	6-16-1
865 180.	21-09-33
865 181.	21-09-33
866 591.	6-16-1
870 469.	19-58-25
870 539.	16-07-3
870 540.	16-07-3
870 821.	8-16-4
892 569.	1-04-8
893 923.	23-32-73
903 895.	8-16-4
913 297.	23-41-56
917 248.	14-24-1
930 304.	8-16-5
932 143.	15-14-12
952 538.	16-02-5
953 717.	8-27-100
958 659.	5-45-8
960 003.	9-58-5
975 633.	23-92-8
	23-101-3
985 563.	23-64-4
988 098.	15-14-13
989 513.	23-08-12
1064 541.	5-111-17
1064 754.	8-16-3
	10-02-53
1067 037.	6-16-1
1118 149.	3-32-4
1118 161.	5-58-1
1119 423.	5-56-2
1122 532.	9-02-7
1123 313.	19-04-13
1134 479.	19-04-5
1135 197.	3-03-26
1136 872.	5-69-1
1137 203.	3-33-4
1137 669.	21-30-433
1138 102.	14-06-1
1139 153.	21-03-24
1139 204.	21-02-6
1139 209.	3-02-20
1139 316.	22-05-24
1139 317.	22-05-24
1142 258.	22-04-11
1142 259.	22-04-11
1142 316.	22-04-11
1152 315.	1-48-394
1158 976.	23-112-75
1158 977.	23-112-75
1163 782.	21-84-4
1188 715.	3-33-2
1239 241.	1-48-225
1239 344.	1-108-49
1242 974.	12-02-5
	15-03-5
	19-31-38
	23-61-39
1243 631.	7-46-1
1245 581.	23-39-19
1246 543.	23-113-36
1249 332.	23-58-209
1256 337.	23-39-2
	23-39-44
1261 834.	5-67-1
1264 933.	8-16-5
1280 134.	23-76-16
	23-76-80
1297 879.	23-47-454
1302 783.	1-48-559
1302 807.	8-56-46
	21-03-25
1312 830.	5-70-1
1313 312.	6-13-8
1314 013.	4-26-23
1314 619.	8-12-3
	8-31-16
	8-42-10
1315 466.	1-48-555
	7-14-9
1315 697	22-05-24
1315 698.	22-05-24
1315 879.	4-26-1
1316 017.	22-08-17
1316 669.	9-46-42
1316 772.	19-14-15
1316 813.	21-30-390
1316 815.	21-119-25
1316 849.	21-113-28
1317 150.	4-26-16
1318 446.	5-43-1
1319 554.	17-23-53
1319 555.	17-23-53
1319 902.	17-23-52
1320 133.	14-06-1
	14-08-36
1322 503.	23-32-99
	23-48-55
1322 763.	21-14-19
1322 765.	21-10-16
1324 090.	6-22-17
1324 268.	9-43-19
1324 281.	10-09-7
1324 470.	9-36-7
1324 963.	7-03-1
1325 239.	13-64-56
1325 850.	9-48-126
1325 906.	8-33-40
1326 091.	9-10-2
1326 093.	9-11-1
1326 219.	3-07-1
1326 773.	16-02-5
	16-20-5
1326 836.	8-27-4
1326 847.	14-29-5
1327 471.	7-03-1
1327 847.	3-22-25
1327 986.	19-31-15
1329 890.	5-12-1
1331 850.	24-28-72
1336 419.	23-54-62
1339 711.	1-48-779
	23-67-161
	24-24-137
	24-28-357
1343 212.	10-24-23
1349 190.	23-64-246

MyMopar.com

PART NUMBER	CODE
1370 460.	4-23-46
1373 263.	15-13-5
1377 825.	24-25-60
	24-25-260
1377 831.	24-25-189
1380 060.	23-32-51
	23-48-93
1381 435.	23-54-103
	23-64-4
1383 351.	23-41-128
1383 958.	8-27-205
1392 770.	19-27-8
1400 185.	14-74-1
1400 269.	17-16-8
1400 788.	17-17-4
1400 857.	14-35-1
1401 808.	3-22-24
1401 809.	3-22-24
1401 810.	3-22-25
1402 981.	9-48-43
	11-06-2
1403 226.	19-15-12
1404 472.	3-22-24
1406 504.	6-16-1
1406 677.	4-26-11
1406 748.	5-62-7
1406 964.	4-23-50
1406 975.	4-23-51
1407 234.	9-23-10
1407 347.	6-24-3
1408 853.	9-02-9
1408 867.	9-10-19
1408 915.	13-36-5
1408 918.	13-36-5
1409 594.	9-58-14
1426 501.	24-25-70
1432 929.	23-32-79
1439 758.	1-48-779
	23-67-161
1440 489.	23-41-138
1440 596.	23-41-7
1450 087.	17-16-1
1450 499.	7-14-10
1450 500.	7-14-10
1450 961.	17-16-1
1458 246.	23-18-28
1458 247.	23-18-28
1475 487.	23-64-12
1475 900.	23-04-117
	23-10-17
1479 060.	8-53-267
	23-41-12
1484 357.	9-48-125
1484 652.	5-13-9
1485 066.	3-03-31
1485 510.	17-15-28
1486 205.	19-01-61
1488 889.	4-29-16
1488 890.	14-29-15
1488 901.	4-29-13
1489 747.	17-15-1
1520 791.	23-82-30
1520 798.	23-17-66
1523 160.	1-82-8
1526 206.	23-32-51
1530 380.	17-17-3
1530 398.	17-15-30
1531 725.	19-02-18
1532 943.	16-07-3
1533 121.	7-03-1
1533 190.	19-48-21
1533 532.	7-03-1
1536 242.	9-43-23
1536 268.	19-56-90
1539 430.	21-139-49
	21-139-98
	24-28-230
1540 383.	23-67-81
1541 977.	15-11-38
1544 841.	23-08-12
1550 711.	21-136-55
1551 005.	7-03-1
1551 067.	9-03-18
1551 097.	13-64-5
	13-66-15
1551 098.	13-66-15
1551 766.	13-64-5
1553 087.	14-35-1
1554 347.	5-62-1
1554 593.	6-13-4
1556 082.	21-138-26
1556 385.	19-02-15
1556 556.	16-20-2
1556 638.	16-20-3
1556 675.	5-39-21
1556 710.	24-28-24
1556 711.	24-28-24
1556 712.	24-28-24
1556 713.	24-28-24
1557 573.	10-26-14
1557 575.	10-26-27
1557 581.	10-26-65
1557 584.	10-26-37
1558 058.	7-03-1
1558 191.	5-55-1
1558 192.	5-55-1
1558 352.	17-29-21
1558 897.	9-59-13
1559 753.	5-39-18
	5-100-209
1566 038.	23-18-112
1569 909.	21-09-23
1570 956.	24-28-79
1571 028.	1-82-30
1578 269.	23-64-60
1592 610.	23-39-19
1593 022.	23-14-27
1594 834.	23-47-432
1594 992.	23-67-20
1594 993.	23-67-102
1594 995.	23-67-100
1595 160.	1-48-555
1602 532.	23-14-23
1602 951.	19-14-38
1603 364.	11-02-1
1603 397.	16-07-4
1604 116.	1-48-90
	1-48-855
	24-01-26
1604 889.	23-41-33
1604 890.	23-41-33
1604 921.	8-33-118
1605 267.	24-28-235
1605 271.	1-48-688
	2-14-13
	24-28-200
1605 299.	23-67-80
1605 602.	23-67-202
1605 604.	23-67-82
1607 897.	23-02-105
1613 388.	2-14-13
1613 409.	22-06-18
1613 416.	22-08-57
1613 782.	9-48-43
1614 579.	6-50-6
1614 666.	9-39-17
1614 894.	5-71-2
1615 349.	22-09-1
1615 350.	22-09-1
1615 351.	22-09-1
1615 352.	22-09-1
1615 353.	22-09-1
1615 354.	22-09-1
1615 460.	5-13-9
1615 836.	14-68-8
1616 185.	16-03-20
1616 746.	13-66-20
1617 379.	5-43-5
1618 157.	14-35-1
1618 220.	14-35-1
1618 610.	19-58-30
1618 611.	19-58-31
1618 666.	9-17-5
1618 668.	7-48-22
1618 671.	9-43-9
1618 683.	9-23-18
1618 686.	9-07-17
1618 695.	9-03-10
1618 696.	9-03-10
1618 701.	9-31-10
1618 717.	9-17-13
1618 718.	9-15-2
1618 732.	9-15-10
1618 736.	9-20-1
1618 738.	9-36-5
1618 739.	9-36-5
1618 740.	9-36-5
1618 848.	6-22-1
1619 627.	9-48-56
1619 636.	9-39-16
1619 700.	22-06-2
1619 701.	22-06-1
1619 702.	22-06-2
1619 703.	22-06-1
1622 064.	1-48-24
1622 352.	23-67-82
1622 535.	8-01-11
	8-01-20
1622 536.	8-01-12
	8-01-21
1623 104.	23-02-107
1623 132.	8-11-12
1624 506.	7-08-7
1624 582.	12-06-3
1626 749.	23-54-191
1627 125.	1-87-404
1627 273.	23-67-16
1630 241.	9-39-14
1630 878.	21-25-6
1630 896.	21-136-15
1631 353.	14-35-8
1631 356.	14-35-1
1631 502.	14-43-5
1631 629.	14-35-1
1632 106.	9-43-14
1632 280.	9-08-5
1632 519.	9-10-5
1632 520.	9-10-5
1632 522.	9-16-6
1632 523.	9-16-6
1632 524.	9-16-6
1632 525.	9-16-6
1632 526.	9-16-6
1633 050.	22-05-14
1633 051.	22-05-14
1633 052.	22-05-14
1633 053.	22-05-14
1633 092.	5-55-1
1633 093.	5-55-1
1633 106.	5-71-2
1633 669.	21-09-19
1633 718.	21-09-5
	21-19-2
1633 762.	21-15-33
1633 763.	21-15-33
1633 928.	3-08-1
1633 937.	3-08-2
1633 959.	3-07-1
1633 960.	3-06-6
1633 961.	3-07-2
1634 508.	6-24-6
1634 619.	2-07-2
1634 701.	14-30-2
1634 876.	14-15-10
1634 984.	3-03-3
1635 092.	16-03-19
1635 098.	16-03-20
1635 282.	21-24-2
1635 290.	21-12-1
1635 293.	21-12-2
	21-24-22
1635 588.	17-23-52
1635 600.	3-01-28
1635 666.	17-15-1
1635 783.	7-45-31
1636 257.	4-26-1
1636 259.	4-29-1
1636 423.	21-139-30
1636 461.	21-138-13
1636 462.	21-138-13
1636 464.	21-138-19
1636 465.	21-138-19
1636 470.	21-137-8
1636 570.	11-06-8
1637 502.	19-58-9
1637 563.	9-39-6
1637 564.	9-39-6
1637 565.	9-39-6
1637 721.	9-42-1
1637 724.	7-45-31
1637 779.	5-27-2
	6-38-3
1637 782.	5-29-1
1638 010.	24-28-24
1638 151.	16-16-6
1638 461.	21-138-29
1639 171.	2-14-15
1639 182.	14-65-4
1639 597.	9-59-15
1639 970.	21-30-345
1641 511.	1-108-28
1641 578.	23-58-396
1641 579.	23-58-395
1641 586.	23-58-430
1641 590.	23-58-375
1641 592.	23-58-430
1641 650.	23-58-381
1641 903.	7-08-15
1642 029.	23-67-80
1642 384.	23-67-163
1642 386.	8-53-266
1642 477.	1-88-118
	8-53-266
1643 151.	9-02-2
1643 152.	9-09-2
1643 153.	9-09-2
1643 155.	9-09-2
1643 156.	9-09-2
1643 721.	23-63-16
1645 615.	23-47-75
1648 380.	24-28-60
1648 394.	24-28-175
1648 407.	24-28-73
1648 430.	24-28-73
1648 460.	24-28-76

MyMopar.com

PART NUMBER	CODE
1651 396	23-15-3
1651 397	23-15-3
1651 400	23-15-1
1651 416	23-39-34
1651 417	23-39-34
1651 431	23-66-135
1651 493	23-14-153
1652 067	23-34-123
1652 093	14-14-5
1658 534	8-27-71
1658 535	8-27-300
1658 638	24-25-156
1658 660	8-34-178
1658 766	24-28-19
1661 046	1-108-17
1662 230	1-108-17
1664 564	5-13-35
1669 337	5-71-1
1670 299	19-27-40
	19-27-55
1670 320	2-03-3
1670 356	19-19-36
1670 476	9-43-26
1670 508	9-50-5
1670 515	9-58-12
1670 694	14-86-85
1671 340	22-06-18
1671 341	22-08-57
1671 362	2-03-3
1671 363	2-03-3
1671 418	2-10-58
1671 419	2-10-58
1671 437	17-29-5
1671 446	2-14-15
1671 569	19-48-52
1671 586	19-02-20
1671 587	19-02-21
1671 610	14-88-27
1671 650	5-111-17
1671 702	19-27-33
1672 049	16-14-7
1672 050	16-14-9
1672 051	16-16-1
1672 053	16-16-43
1672 194	21-04-11
1672 287	21-137-8
1672 296	21-118-7
1672 960	2-08-62
1672 962	2-10-58
1672 963	2-10-58
1672 964	17-29-5
1672 980	19-27-50
1672 988	17-29-16
1672 989	17-29-13
1673 008	19-27-50
1673 060	17-29-11
1673 065	17-29-10
1673 090	17-29-15
1673 184	21-30-394
1673 324	22-06-10
1673 367	3-03-25
1673 373	3-35-14
1673 375	3-33-1
1673 389	3-19-1
1673 390	3-19-1
1673 531	17-19-20
1673 646	9-45-2
1673 649	7-03-1
1673 650	7-03-1
1673 921	21-30-370
1673 967	8-33-5
1673 974	19-02-17
1674 081	5-72-1
1674 082	13-18-32
1675 246	6-24-1
1675 271	19-19-40
1675 448	3-32-1
1675 449	3-32-1
1675 485	3-20-1
1675 821	17-24-28
1675 958	8-27-27
1676 197	21-14-6
1676 200	19-48-50
	21-42-42
1676 629	21-30-325
1676 692	14-35-1
1676 770	14-35-1
1680 109	23-64-4
1684 831	23-14-24
1685 782	23-06-16
1686 107	7-12-1
1686 198	7-13-2
1686 412	7-08-2
1686 414	7-08-2
1686 451	7-08-13
1686 453	7-08-13
1686 463	7-08-2
1686 914	12-01-10
	12-04-33
1688 207	8-35-41
1688 542	1-88-123
1688 919	23-41-138
1689 022	23-41-11
	23-54-176
1689 167	23-41-139
1689 670	24-01-33
1689 692	1-48-46
1690 329	23-39-2
	23-39-44
1690 440	23-36-66
1690 441	23-36-66
1690 742	23-20-19
1690 871	23-66-135
1690 874	23-63-33
1690 937	23-39-45
1690 950	23-09-17
1691 076	23-64-308
1691 077	23-64-308
1691 078	23-64-308
1691 086	23-09-9
1691 087	23-09-9
1691 100	23-39-33
1691 104	23-64-12
1691 105	23-64-12
1691 107	23-34-225
1691 152	23-64-308
1691 156	23-64-308
1691 157	23-64-308
1691 174	23-64-308
1691 175	23-64-308
1691 196	23-64-308
1691 197	23-64-308
1691 238	23-64-311
1691 239	23-64-311
1691 240	23-64-311
1691 241	23-64-311
1691 275	23-10-18
1691 397	23-58-75
1691 400	23-58-75
1691 415	23-58-75
1691 533	23-64-308
1691 616	23-64-280
1691 617	23-64-280
1691 788	23-64-255
1691 789	23-64-255
1691 842	23-64-255
1691 843	23-64-255
1691 899	23-19-85
1691 901	23-111-37
1691 902	23-58-76
1691 903	23-58-76
1691 911	23-58-229
1691 923	23-111-30
1691 932	23-23-14
1691 933	23-23-14
1691 946	23-58-394
1691 947	23-58-394
1691 948	23-58-472
1691 949	23-58-472
1691 966	23-39-47
1691 967	23-39-47
1692 142	23-34-236
1692 143	23-34-236
1692 152	23-09-58
1692 153	23-09-58
1692 154	23-39-18
1692 155	23-39-18
1692 172	23-20-19
1692 173	23-20-19
1692 678	8-20-9
1694 073	23-58-75
1694 078	23-58-75
1695 319	22-20-29
1695 431	23-14-21
1696 605	15-13-6
1697 413	23-81-3
1697 607	23-09-9
	23-09-17
1698 140	23-02-42
1698 868	8-47-126
1704 061	23-67-91
1704 062	23-67-48
1704 063	23-67-48
1704 066	23-67-49
1704 198	1-48-715
	24-28-200
1704 283	21-113-24
1704 467	8-42-10
1704 482	21-113-29
1704 689	8-33-90
1704 802	1-108-2
1704 803	1-108-2
1704 875	8-05-12
	8-42-10
1706 470	23-58-605
1707 384	23-14-153
1708 248	23-04-229
1708 914	23-58-336
1708 998	23-64-237
1717 314	8-36-95
1730 009	5-29-1
1730 019	6-43-13
1730 087	14-86-83
1730 095	14-72-47
1730 155	7-02-16
1730 160	3-01-25
1730 183	17-19-10
1730 366	7-14-9
1730 978	8-33-19
1730 985	19-19-35
1731 143	21-30-340
1731 228	5-28-8
	6-39-2
1731 275	17-29-18
1731 341	17-29-15
1731 402	2-10-58
1731 403	2-10-58
1731 414	19-27-2
1731 415	19-27-2
1731 525	9-07-8
1731 738	3-01-33
1731 769	3-01-30
1731 789	3-01-34
1731 796	17-11-10
1731 798	17-11-10
1732 296	22-03-2
1732 297	22-03-2
1732 300	22-06-5
1732 512	22-03-2
1732 513	22-03-2
1732 946	19-54-181
1733 218	19-01-24
1733 488	19-54-86
1733 562	19-02-69
1733 577	19-19-4
1733 588	19-14-13
1733 593	19-01-52
1733 602	19-14-18
1733 604	19-19-24
1733 612	19-57-13
1733 615	19-19-26
1733 625	19-14-19
1733 627	19-19-32
1733 724	19-57-16
1733 763	19-01-8
1733 790	19-19-30
1733 791	19-01-51
1733 805	7-06-3
1733 954	19-15-60
1734 028	14-11-25
1734 030	14-11-20
1734 078	19-19-19
1734 159	16-04-1
1734 315	17-29-20
1734 321	2-10-59
1734 326	19-27-45
1734 327	19-27-34
1734 330	19-27-31
1734 335	19-27-2
	19-27-31
1734 341	2-10-60
1734 502	13-54-4
1734 526	13-01-6
1734 527	13-01-6
1734 529	9-71-5
1734 957	7-41-4
1735 011	7-41-4
1735 128	13-54-15
1735 941	7-02-1
1736 012	9-58-13
1736 215	21-136-17
1736 432	21-04-12
1736 521	21-133-46
1736 990	13-72-2
1736 993	3-01-35
1737 167	5-47-10
1737 430	13-64-5
	13-66-15
1737 620	9-20-1
1737 621	9-08-5
1737 622	9-17-5
1737 645	9-43-1
1737 646	9-43-1
1737 690	9-31-4
1737 694	9-31-5
1737 695	9-31-7
	9-48-44
1737 698	9-39-6
1737 705	7-44-3
1737 709	9-50-6
1737 718	10-07-10
1737 725	10-09-7
1737 727	10-07-8
1737 742	10-22-15
1737 743	10-22-15
1737 744	10-22-15
1737 745	14-77-17
1737 756	9-43-5
1737 757	9-42-1

MyMopar.com

PART NUMBER	CODE
1737 761. . . .	7-44-4
1737 770. . .	10-24-8
1737 771. . .	9-23-18
1737 780. . .	14-39-45
1737 925. . . .	7-03-1
1738 214. . . .	8-33-4
1738 221. . . .	4-29-1
1738 268. . . .	5-46-1
1738 635. . .	14-65-4
1738 662. .	19-54-181
1738 678. .	19-54-130
1738 683. .	19-54-188
1738 794. . .	3-22-27
1738 795. . .	3-22-27
1738 796. . .	3-22-27
1738 797. . .	3-22-27
1738 798. . .	3-22-27
1738 799. . .	3-22-27
1738 800. . .	3-22-27
1738 801. . .	3-22-27
1738 802. . .	3-22-27
1738 805. . .	3-22-28
1738 806. . .	3-22-28
1738 807. . .	3-22-28
1738 812. . .	3-22-27
1738 813. . .	3-22-27
1738 814. . .	3-22-27
1738 815. . .	3-22-27
1738 816. . .	3-22-27
1738 817. . .	3-22-27
1738 818. . .	3-22-27
1738 819. . .	3-22-27
1738 820. . .	3-22-27
1738 822. . . .	3-19-1
1738 823. . . .	3-19-1
1738 824. . . .	3-19-1
1738 826. . .	3-22-26
1738 831. . .	3-22-45
1739 049. . .	12-04-12
1739 194. . .	14-86-13
1739 196. . .	14-86-24
1739 215. . . .	5-62-1
1739 226. . . .	5-52-3
1739 230. . .	14-67-2
	14-89-57
1739 248. . . .	5-57-2
1739 249. . . .	5-62-1
1739 355. . . .	8-36-4
1739 356. . . .	9-41-4
1739 357. . . .	9-41-4
1739 358. . . .	9-41-4
1739 359. . . .	9-41-4
1739 534. . .	9-39-15
1739 547. . .	14-29-6
1739 594. . .	9-43-10
1739 595. . .	9-43-10
1739 600. . . .	9-48-6
1739 604. . .	10-09-5
1739 605. . .	9-03-10
1739 606. . .	9-03-10
1739 607. . .	9-15-10
1739 612. . . .	9-39-6
1739 613. . . .	9-39-6
1739 614. . . .	9-39-6
1739 616. . .	16-10-2
1739 619. . .	10-26-5
1739 912. . .	16-08-7
1739 913. . .	16-10-1
1739 920. . .	16-04-1
1739 923. . .	16-03-7
1739 924. . .	16-06-1
1739 926. . .	16-06-3
1739 927. . .	16-03-10
1740 029. . .	24-27-10
	24-28-22
1740 550. . .	7-08-16
1740 972. . .	24-25-26
1742 766. . .	24-26-20
1744 767. . .	24-26-26
1744 768. .	24-28-322
1747 988. .	24-25-252
1750 188. .	23-34-236
1750 189. .	23-34-236
1750 400. .	23-58-333
1750 406. .	23-58-473
1750 407. .	23-58-473
1750 445. .	23-34-116
1750 466. . .	23-39-18
1750 467. . .	23-39-18
1750 484. . .	23-15-21
1750 534. .	23-64-255
1750 535. .	23-64-255
1750 537. . .	23-64-12
1750 565. . .	23-15-1
1750 578. . .	23-09-52
1750 579. . .	23-09-52
1750 593. .	5-100-105
1750 602. . .	23-15-21
1750 603. . .	23-15-21
1750 606. . .	23-64-12
1750 609. . .	23-64-12
1750 619. .	23-58-257
1750 628. .	23-111-30
1750 647. .	23-58-487
1750 648. .	23-58-487
1750 658. . .	23-64-12
1750 659. . .	23-64-12
1750 660. . .	23-09-15
1750 686. . .	23-10-2
1750 724. .	23-58-248
1750 726. .	23-58-603
1750 747. . .	22-20-80
1750 777. .	23-58-232
1750 806. . .	23-64-12
1750 854. .	23-58-232
1750 855. .	23-58-232
1750 991. . .	23-19-76
1750 995. . .	23-08-12
1751 000. .	23-34-234
1751 001. .	23-34-234
1751 002. .	23-34-234
1751 003. .	23-34-234
1751 033. .	23-34-136
1751 056. . .	23-09-52
1751 057. . .	23-09-52
1751 092. .	23-64-255
1751 094. .	23-58-220
1751 130. . .	23-19-76
1751 131. . .	23-19-76
1751 156. .	23-58-243
1751 173. .	23-58-253
1751 182. .	23-131-145
1751 206. .	23-58-269
1751 207. .	23-58-269
1751 208. .	23-58-469
1751 209. .	23-58-469
1751 210. .	23-58-333
1751 262. .	23-58-266
1751 264. .	23-58-265
1751 489. .	23-64-279
1751 492. .	23-64-278
1751 534. . .	23-76-79
1751 535. . .	23-76-79
1751 570. . .	23-63-33
1751 571. . .	23-63-33
1751 610. .	23-63-104
1751 611. .	23-63-104
1751 620. . .	23-63-33
1751 621. . .	23-63-33
1751 646. . .	23-63-33
1751 647. . .	23-63-33
1751 654. . .	23-63-33
1751 655. . .	23-63-33
1751 692. . .	23-64-12
1751 693. . .	23-64-12
1751 698. . .	23-64-12
1751 699. . .	23-64-12
1751 706. . .	23-63-15
1751 707. . .	23-63-15
1751 708. . .	23-63-15
1751 709. . .	23-63-15
1751 724. . .	23-63-15
1751 725. . .	23-63-15
1751 732. . .	23-39-15
1751 733. .	23-58-569
1751 742. . .	23-63-33
1751 743. . .	23-63-33
1751 744. . .	23-63-33
1751 745. . .	23-63-33
1751 774. . .	23-63-33
1751 775. . .	23-63-33
1751 793. . .	23-36-21
1751 806. .	23-58-480
1751 807. .	23-58-480
1751 810. .	23-58-480
1751 890. .	23-64-280
1751 891. .	23-64-280
1752 375. . .	8-52-67
1752 422. . . .	7-42-1
1752 435. . . .	7-42-4
1752 470. . . .	5-39-4
1752 488. . . .	8-16-3
1752 489. . . .	8-16-3
1752 490. . . .	8-16-3
1752 491. . . .	8-16-3
1752 518. .	23-58-380
	23-67-16
1752 588. . . .	9-35-1
1752 589. . . .	9-35-1
1752 590. . . .	9-35-1
1752 622. . . .	7-42-4
1752 624. . .	16-03-1
1753 435. . .	8-34-175
1753 436. . .	8-34-175
1753 534. . . .	8-16-4
1753 579. . .	24-28-84
1753 632. . .	8-31-16
	8-37-88
	8-50-156
1753 681. . .	23-41-95
1753 706. . .	23-41-4
1753 707. . .	23-41-4
1753 711. .	23-67-204
1753 712. .	23-67-203
1754 236. . .	15-19-8
1755 366. .	23-64-237
1757 559. . .	23-86-35
1758 076. . .	23-10-17
1758 241. .	23-113-50
1759 635. . .	23-86-36
1759 636. . .	23-86-36
1759 686. . .	23-86-35
1766 986. . .	23-20-16
1767 102. .	23-131-125
1767 247. . .	23-63-14
1769 280. . . .	8-16-4
1769 318. .	24-25-219
1769 327. .	23-54-166
1769 330. .	23-41-184
1769 430. . .	1-87-404
1769 967. .	23-47-423
1770 140. . .	23-67-50
1770 289. . .	23-67-82
1770 290. . .	23-67-82
1770 552. .	23-58-200
1770 553. .	23-58-200
1770 660. . . .	8-16-4
	8-19-39
	23-67-166
1770 661. .	23-67-163
1770 786. . . .	8-13-1
1772 798. . .	23-63-20
1773 635. .	23-31-119
1774 621. .	23-131-205
1775 089. . .	23-63-16
1775 164. . .	23-54-79
1775 440. . .	23-48-19
1775 814. . .	23-32-82
	23-48-21
1775 840. . .	23-54-92
1776 504. .	23-64-242
1776 505. .	23-64-242
1776 875. . .	23-54-24
1777 458. . .	23-54-31
1777 881. .	23-34-123
	23-54-50
1777 897. . .	23-38-23
1778 955. .	23-41-138
	23-54-152
1779 055. .	23-47-430
1779 257. . .	1-48-572
1779 406. . .	8-34-180
1779 645. . .	23-54-74
1779 654. . . .	8-16-4
1779 863. . .	1-88-205
1779 890. .	23-47-425
1779 986. . .	8-28-88
1789 754. . .	22-06-2
1789 755. . .	22-06-1
1790 241. . .	22-06-1
1790 244. . .	22-06-2
1790 523. . . .	3-11-1
1798 521. . . .	8-16-4
1799 554. . .	22-05-14
1799 555. . .	22-05-14
1810 002. .	23-58-572
1810 003. .	23-58-572
1810 004. .	23-58-572
1810 005. .	23-58-572
1810 006. .	23-58-590
1810 007. .	23-58-590
1810 016. . .	23-63-94
1810 017. . .	23-63-94
1810 037. .	23-109-38
1810 056. .	23-34-249
1810 057. .	23-34-249
1810 058. . .	23-40-92
1810 059. . .	23-40-92
1810 073. . .	12-02-5
1810 118. .	23-112-88
1810 204. .	23-34-236
1810 205. .	23-34-236
1810 440. .	23-58-487
1810 446. . .	23-36-73
1810 447. . .	23-36-73
1810 453. . .	23-61-39
1810 565. .	23-34-116
1810 586. . .	23-36-73
1810 587. . .	23-36-73
1810 635. .	23-41-273
1810 641. .	23-41-138
1810 648. .	23-41-273
1810 704. . .	23-63-33
1810 705. . .	23-63-33
1810 706. . .	23-63-33
1810 707. . .	23-63-33

MyMopar.com

PART NUMBER	CODE
1810 910	23-20-19
1815 328	23-45-30
1818 524	9-09-2
1818 525	9-09-2
1818 526	9-09-2
1818 527	9-09-2
1818 528	9-09-2
1818 529	9-09-2
1818 639	5-63-1
1818 698	9-32-2
1818 699	9-32-2
1818 700	9-32-2
1818 701	9-32-2
1818 702	9-32-2
1818 703	9-32-2
1818 757	8-27-190
1818 830	8-53-327
1818 834	5-63-3
1818 892	23-67-25
1818 917	1-108-2
1818 918	1-108-2
1819 014	1-48-159
	1-87-22
1819 228	23-47-344
1819 230	23-47-413
1819 239	23-47-344
1819 240	23-47-344
1819 251	1-82-15
1819 316	23-17-51
1819 317	23-17-52
1819 441	8-38-4
1819 470	1-48-264
1819 689	1-48-712
1819 697	1-48-712
1819 748	1-48-941
1819 836	8-16-4
1819 889	1-87-289
1819 948	21-84-1
1820 005	5-28-8
1820 152	17-15-25
1820 153	17-15-25
1820 211	6-27-5
1820 318	11-02-4
1820 319	11-02-4
1820 385	19-14-35
1820 454	6-13-4
1820 551	3-22-25
1820 552	3-22-24
1820 555	3-32-1
1820 698	3-03-3
1820 703	3-22-28
1820 704	3-22-28
1820 705	3-22-28
1820 706	3-22-28
1820 707	3-22-28
1820 709	3-22-28
1820 812	17-15-25
1820 813	17-15-25
1821 138	7-03-1
1821 170	14-29-5
1821 177	9-07-8
1821 198	10-01-21
1821 200	10-01-21
1821 393	9-43-9
1821 394	8-36-124
1821 411	7-06-1
1821 414	9-07-8
1821 440	9-03-29
1821 449	7-06-1
1821 452	7-06-14
1821 557	9-02-14
1821 684	7-03-1
1821 721	9-02-16
1821 722	9-16-17
1821 771	9-16-6
1821 772	9-16-6
1821 773	9-16-6
1821 774	9-16-6
1821 775	9-16-6
1822 123	14-15-10
1822 124	14-15-6
1822 134	19-01-50
1822 149	19-01-52
1822 150	19-01-51
1822 151	19-01-52
1822 156	19-15-63
1822 157	19-15-65
1822 158	19-15-60
1822 204	19-19-9
1822 320	19-19-72
1822 321	19-01-62
1822 324	19-19-70
1822 380	19-57-63
1822 390	19-15-69
1822 406	19-19-71
1822 442	19-56-83
1822 667	19-15-11
1822 668	19-15-10
1822 671	19-56-6
1822 672	19-56-6
1822 736	19-15-38
1822 953	19-01-50
1823 091	19-01-52
1823 148	19-57-3
1823 150	19-02-15
1823 151	19-57-64
1823 155	19-14-10
1823 157	19-01-60
1823 160	19-14-10
1823 161	19-01-60
1823 543	21-136-229
1823 940	21-137-44
1823 941	21-137-41
1824 879	17-29-6
1824 934	17-29-14
1824 935	17-29-12
1824 936	17-29-12
1825 306	2-08-5
1825 307	2-08-5
1825 314	2-08-48
1825 317	2-08-7
1825 351	5-13-10
1825 449	2-08-71
1825 487	2-08-61
1825 582	2-14-19
1825 604	2-14-3
1825 605	2-14-3
1825 607	2-14-3
1825 610	2-14-3
1825 611	2-14-3
1825 664	2-08-5
1825 665	2-08-5
1825 672	2-05-4
1825 673	2-05-4
1825 674	2-05-4
1825 675	2-05-4
1825 676	2-05-4
1825 677	2-05-4
1825 696	2-10-58
1825 697	2-10-58
1825 704	2-14-3
1825 705	2-14-3
1825 708	2-14-3
1825 709	2-14-3
1825 761	2-08-61
1825 903	7-03-1
1825 922	10-02-8
1825 924	14-15-3
1825 932	7-02-16
1826 053	7-06-1
1826 056	19-54-86
1826 057	19-54-115
1826 058	19-54-115
1826 208	14-35-1
1826 286	14-29-33
1826 346	14-30-28
1826 369	14-41-3
1826 511	14-30-7
1826 561	14-30-7
1826 607	14-41-3
1826 846	14-41-3
1826 860	14-43-5
1826 861	14-43-5
1826 863	14-30-28
	14-35-1
1826 864	14-30-27
1827 431	7-03-1
1827 773	14-11-48
1827 999	14-06-10
1828 352	13-34-3
1828 388	5-40-1
1828 389	5-44-8
1828 396	5-52-62
1828 420	22-01-43
	23-96-4
1828 456	14-86-57
1828 461	5-52-3
1828 517	3-03-1
1828 566	19-14-5
1828 719	3-22-45
1828 725	3-22-28
1828 824	16-10-3
1828 851	17-19-3
1828 911	19-14-4
1829 058	8-47-57
1829 266	3-32-1
1829 267	3-32-1
1829 383	6-52-10
1829 440	3-22-28
1829 441	3-22-28
1829 442	3-22-28
1829 443	3-22-28
1829 444	3-22-28
1829 445	3-32-9
1829 446	3-08-1
1829 447	3-06-8
1829 448	3-06-5
1829 449	3-07-1
1829 451	3-09-1
1829 624	22-01-51
1829 625	22-01-49
1829 790	4-23-1
1829 816	4-23-2
1829 825	1-48-722
	24-28-378
1829 929	17-15-24
1830 212	23-47-431
1830 216	23-47-431
1830 217	23-47-431
1830 218	23-47-431
1830 236	23-47-12
1830 237	23-47-12
1830 290	23-47-414
1830 344	23-47-432
1830 345	23-47-432
1830 346	23-47-432
1830 347	23-47-432
1830 348	23-47-432
1830 349	23-47-432
1830 415	23-06-28
1830 452	23-31-124
1830 498	23-26-62
1830 499	23-26-62
1830 632	1-48-365
1830 633	1-48-365
1831 003	23-114-15
1833 596	23-32-80
	23-48-20
1833 597	23-32-82
	23-48-21
1833 900	23-04-249
1835 109	23-48-93
1835 239	23-26-47
1838 001	1-82-22
1838 242	23-67-85
1838 289	23-67-18
1838 292	23-67-76
1838 293	23-67-18
1838 380	24-28-78
1838 508	8-27-76
1838 514	8-27-71
1838 516	8-27-300
1838 934	23-67-79
1838 936	23-67-76
1839 345	1-48-389
1839 386	23-47-8
1839 387	23-47-8
1839 546	23-22-145
1839 547	23-22-145
1839 558	23-22-145
1839 559	23-22-145
1839 566	23-22-145
1839 567	23-22-145
1839 568	23-06-12
1839 569	23-06-10
1839 570	23-07-168
1839 685	19-31-24
1839 689	23-33-129
1839 691	23-33-220
1839 695	23-33-86
1839 704	23-02-18
1839 845	1-76-2
1839 926	23-22-53
1839 927	23-22-53
1839 928	23-22-53
1839 929	23-22-53
1839 930	23-22-53
1839 931	23-22-53
1839 932	23-22-53
1839 933	23-22-53
1839 934	23-22-53
1839 935	23-22-53
1839 936	23-26-41
1839 937	23-26-41
1839 940	23-22-86
1839 941	23-22-86
1839 956	23-20-16
1839 965	23-21-26
1839 966	23-21-46
1839 967	23-21-47
1839 976	23-22-78
1839 977	23-22-77
1839 984	19-31-1
1839 985	19-31-24
1839 995	1-87-17
	23-33-96
1840 998	23-26-80
1840 999	23-26-80
1841 191	23-67-86
1841 499	8-36-14
1841 679	23-67-79
1841 682	23-67-86
1841 683	23-67-86
1841 698	1-87-464
1841 775	8-34-175
1841 893	8-55-57
1842 003	8-16-8
1842 009	8-16-4

MyMopar.com

PART NUMBER	CODE
1842 340. . .	1-13-13
	8-13-4
	8-41-37
	8-42-11
	8-55-293
	8-56-27
	8-57-89
1842 407. . .	23-67-79
1842 964. . .	23-67-98
1843 004. . . .	9-34-5
1843 005. . . .	9-34-5
1843 006. . . .	9-34-5
1843 007. . . .	9-34-5
1843 008. . .	11-02-1
1843 009. . .	11-02-1
1843 010. . .	11-02-1
1843 222. . . .	8-16-1
1843 226. . . .	8-16-1
1843 227. . . .	8-16-1
1843 251. . . .	5-53-3
1843 252. . . .	5-53-5
1843 253. . . .	5-53-3
	9-46-27
	14-89-2
1843 254. . . .	5-53-3
1843 257. . . .	5-53-4
1843 258. . . .	5-53-4
1843 259. . . .	5-53-4
1843 287. . .	14-73-1
1843 316. . . .	9-34-5
1843 317. . . .	9-34-5
1843 318. . . .	9-34-5
1843 330. . . .	9-35-1
1843 331. . . .	9-35-1
1843 332. . . .	9-35-1
1843 407. . .	11-02-1
1843 447. . . .	7-42-4
1846 350. .	23-67-129
1846 668. . .	23-32-36
1850 370. . . .	3-04-6
1850 524. . .	19-15-23
1850 547. . .	19-14-38
1850 938. . . .	5-13-9
1851 248. . .	7-06-14
1851 314. .	19-54-115
1851 533. . . .	9-31-4
1851 579. . . .	9-03-5
1851 608. . .	7-04-10
1851 658. . .	10-26-6
1851 664. . . .	9-50-6
1851 665. . .	9-48-27
1851 669. . . .	9-42-1
1851 732. . .	19-54-86
1851 752. . .	14-08-37
1851 753. . .	14-06-10
1851 957. . .	19-54-60
1852 020. . .	14-39-45
1852 057. . .	10-02-15
1852 177. . .	9-16-17
1852 248. . . .	9-39-6
1852 278. . .	14-33-5
1852 568. . .	14-29-2
1852 569. . .	14-29-6
1852 582. . .	7-06-14
1852 586. . .	14-30-2
1852 910. . . .	9-10-5
1852 911. . . .	9-10-5
1852 914. . . .	9-10-5
1852 915. . . .	9-10-5
1852 920. .	19-54-248
1852 932. . .	24-25-15
1852 933. . .	24-25-15
1853 024. . .	12-04-23
1853 627. . .	21-15-2
1853 672. . .	21-14-5
1853 695. . .	21-11-1
1853 745. . .	21-34-47
1853 855. . .	21-10-4
1854 274. .	21-139-95
1854 275. .	21-139-95
1854 449. . .	21-22-2
1854 817. . . .	9-48-7
1854 829. .	24-25-160
1854 853. . .	9-48-138
1854 895. . . .	7-03-1
1854 953. . . .	9-43-1
1854 990. . . .	9-48-6
1855 029. . .	11-06-10
1855 042. . .	9-39-15
1855 152. . . .	7-06-1
1855 238. . . .	9-43-3
1855 328. . .	10-07-12
1855 393. . . .	9-05-5
1855 561. . .	9-07-22
1855 605. . . .	9-05-5
1856 292. . .	19-15-63
1856 344. . .	17-11-7
1856 345. . .	17-11-7
1856 346. . .	17-11-7
1856 347. . .	17-11-7
1856 492. .	21-30-375
1856 580. . .	14-06-1
1856 808. . .	22-01-5
1856 942. . .	16-17-1
1856 944. . .	16-16-47
1856 992. . .	19-04-13
1857 051. . . .	5-64-1
1857 052. . . .	5-64-1
1857 053. . . .	5-64-1
1857 054. . . .	5-64-1
1857 055. . . .	5-64-1
1857 063. . . .	5-03-5
1857 549. . .	2-14-12
1857 576. . .	2-14-25
1857 580. . .	2-14-19
1857 682. . .	2-10-10
1857 748. . .	19-27-40
1857 778. . . .	2-14-3
1857 779. . . .	2-14-3
1857 840. . .	2-08-11
1857 856. . . .	2-08-5
1857 857. . . .	2-08-5
1857 901. . .	2-10-58
1857 906. . .	17-29-5
1857 911. . .	17-29-18
1857 992. . . .	2-10-6
1857 993. . . .	2-10-7
1858 015. . .	19-27-50
1858 017. . .	19-27-2
1858 067. . .	19-27-31
1858 070. . .	2-10-10
1858 084. . . .	2-03-3
1858 100. . .	17-29-6
1858 101. . .	17-29-6
1858 105. . .	17-29-9
1858 115. . .	2-08-72
1858 150. . . .	2-10-6
1858 151. . . .	2-10-7
1858 153. . .	2-10-10
1858 160. . . .	2-10-6
1858 161. . . .	2-10-7
1858 262. . .	2-07-41
1858 263. . .	2-07-41
1858 523. . .	14-39-45
1858 620. . .	24-25-15
1858 622. . .	24-25-15
1858 623. . . .	9-48-7
1858 802. . .	9-43-19
1858 907. . .	10-03-4
1858 936. . .	14-02-12
	14-13-1
	24-28-104
1858 955. . . .	9-48-8
1859 151. . .	7-45-31
1859 228. . . .	9-48-7
1859 252. . . .	7-06-1
1859 298. . . .	9-48-7
1859 299. . . .	9-48-7
1859 300. . . .	9-48-7
1859 332. . .	9-48-27
1859 396. . .	14-07-1
1859 429. . . .	9-03-5
1859 527. . .	14-29-2
1859 580. . . .	7-06-1
1859 750. . .	14-29-2
1859 767. . .	14-01-31
	14-11-20
	14-14-57
	21-142-20
1859 768. . .	14-01-30
	14-11-33
	14-14-56
	21-142-21
1859 770. . . .	7-04-1
1859 788. . .	10-03-7
1859 803. . . .	8-36-4
1859 804. . . .	8-36-4
1859 919. . . .	9-43-1
1859 947. . .	10-23-7
1859 991. . .	14-11-1
1859 994. . .	14-11-28
1859 995. . .	14-11-9
1859 996. . .	14-11-9
1860 619. .	23-41-126
1860 829. . .	23-10-1
1860 962. . .	23-41-4
1860 963. . .	23-41-4
1860 995. .	23-58-569
1861 001. . .	23-32-24
1861 002. . .	23-32-48
1861 014. . .	23-51-5
1861 015. . .	23-51-5
1861 041. . .	23-32-48
1861 048. . .	23-32-49
1861 049. . .	23-32-49
1861 062. . .	23-34-27
1861 063. . .	23-34-27
1861 118. .	23-34-301
1861 128. . .	23-40-86
1861 129. . .	23-40-86
1861 142. . .	23-64-66
1861 143. . .	23-64-66
1861 222. .	23-34-302
1861 223. .	23-34-302
1861 248. .	23-34-126
1861 249. .	23-34-126
1861 264. . .	23-32-17
1861 268. . .	23-51-3
1861 269. . .	23-51-3
1861 270. . .	23-51-43
1861 271. . .	23-51-43
1861 274. . .	23-51-6
1861 275. . .	23-51-6
1861 286. . .	23-36-5
1861 287. . .	23-36-5
1861 334. .	23-58-569
1861 335. .	23-58-569
1861 392. .	23-58-208
1861 416. . .	23-51-6
1861 418. . .	23-51-6
1863 235. . .	15-19-8
1863 328. . .	12-05-2
1863 329. . .	12-05-2
1863 331. . .	15-13-2
1863 586. . .	12-01-12
1863 612. . .	12-01-12
1863 708. . .	15-19-8
1863 719. . .	15-11-46
1863 760. . . .	7-26-5
1863 926. . .	12-02-5
1866 682. . .	23-32-65
1866 683. . .	23-32-75
1866 685. . .	23-32-64
1866 686. . .	23-17-18
1867 661. . .	23-19-70
1867 682. .	23-34-120
1867 683. .	23-34-120
1867 873. .	23-34-301
1869 556. . .	23-40-86
1869 557. . .	23-40-86
1869 564. . .	23-26-44
	23-26-45
1869 565. . .	23-26-44
	23-26-45
1869 582. . .	23-32-15
1869 627. .	23-66-135
1869 630. .	23-64-314
1869 636. .	23-34-166
1869 744. . .	23-34-27
1869 745. . .	23-34-27
1869 748. . .	23-34-27
1869 749. . .	23-34-27
1869 752. . .	23-34-27
1869 753. . .	23-34-27
1869 772. . .	23-36-53
1869 773. . .	23-36-53
1874 244. . .	23-114-2
1874 607. .	23-114-14
1874 955. .	23-114-15
1874 974. .	23-114-15
1874 975. .	23-114-15
1875 018. .	23-114-15
1875 093. .	23-114-15
1875 778. .	23-114-15
1875 822. .	23-114-15
1875 903. .	23-114-15
1876 331. . .	23-21-8
1877 310. . .	23-36-53
1877 311. . .	23-36-53
1877 314. . .	23-36-53
1877 315. . .	23-36-53
1877 316. .	23-64-311
	23-64-314
1877 317. .	23-64-311
	23-64-314
1877 318. . .	23-36-14
1877 319. . .	23-36-14
1877 324. .	23-64-311
	23-64-314
1877 325. .	23-64-311
	23-64-314
1877 328. . .	23-40-85
1877 329. . .	23-40-85
1877 346. . .	23-32-48
1877 350. .	23-34-176
1877 351. .	23-34-176
1877 353. .	23-04-241
1877 354. .	23-04-241
1877 355. .	23-04-250
1877 358. . .	23-64-66
1877 359. . .	23-64-66
1877 360. . .	23-64-66
1877 361. . .	23-64-66
1877 362. . .	23-64-66
1877 363. . .	23-64-66
1877 364. . .	23-64-67
1877 365. . .	23-64-67
1877 390. . .	23-64-67
1877 391. . .	23-64-67

MyMopar.com

PART NUMBER	CODE
1877 408. . .	23-40-92
1877 409. . .	23-40-92
1877 462. . .	23-51-41
1877 463. . .	23-51-41
1877 472. . .	23-59-37
1877 473. . .	23-59-37
1877 486. . .	23-34-255
1877 488. . .	23-04-249
1877 494. . .	23-51-41
1877 495. . .	23-51-41
1877 516. . .	23-04-249
1877 520. . .	23-19-185
1877 521. . .	23-19-185
1877 522. . .	23-51-41
1877 523. . .	23-51-41
1877 540. . .	23-19-177
1877 541. . .	23-19-177
1877 742. . .	23-34-302
1877 743. . .	23-34-302
1877 746. . .	23-112-70
1877 747. . .	23-112-70
1877 762. . .	23-32-49
1877 763. . .	23-32-49
1877 768. . .	23-40-85
1877 769. . .	23-40-85
1877 786. . .	23-51-5
1877 787. . .	23-51-5
1877 830. . .	23-32-49
1877 831. . .	23-32-49
1877 833. . .	23-34-16
1877 834. . .	23-34-17
1877 840. . .	23-36-125
1877 841. . .	23-36-125
1877 855. . .	23-54-150
1877 926. . .	23-48-87
1877 927. . .	23-48-87
1877 956. . .	8-56-10
1877 958. . .	23-64-311
	23-64-314
1877 975. . .	23-51-41
1878 014. . .	23-32-67
1878 031. . .	23-51-6
1878 112. . .	23-58-393
1878 128. . .	8-56-34
1878 136. . .	23-32-90
1878 137. . .	23-32-90
1878 145. . .	23-04-2
1878 161. . .	23-64-311
	23-64-314
1878 169. . .	14-88-36
1878 170. . .	23-32-65
	23-48-121
1878 171. . .	23-32-65
	23-48-121
1878 174. . .	23-111-10
1878 180. . .	23-64-311
1878 181. . .	23-64-311
1878 184. . .	23-64-311
1878 185. . .	23-64-311
1878 196. . .	8-57-10
1878 204. . .	23-63-181
1878 226. . .	23-51-6
1878 227. . .	23-51-6
1878 228. . .	23-51-6
1878 236. . .	23-32-93
1878 237. . .	23-32-93
1878 238. . .	23-51-41
1878 239. . .	23-51-41
1878 254. . .	23-36-121
1878 255. . .	23-36-121
1878 263. . .	14-88-8
1878 264. . .	14-88-8
1878 310. . .	23-54-98
1878 338. . .	23-40-86
1878 339. . .	23-40-86
1878 340. . .	23-40-86
1878 341. . .	23-40-86
1878 428. . .	23-51-41
1878 429. . .	23-51-41
1878 440. . .	23-26-44
	23-26-45
1878 441. . .	23-26-44
	23-26-45
1878 444. . .	23-34-302
1878 445. . .	23-34-302
1878 475. . .	23-32-17
1878 556. . .	23-51-6
1878 557. . .	23-51-6
1878 584. . .	23-54-59
1878 592. . .	23-48-188
1878 600. . .	23-48-148
1878 601. . .	23-48-148
1878 636. . .	23-32-46
1878 641. . .	23-48-28
1878 650. . .	23-63-181
1878 652. . .	23-48-65
1878 752. . .	23-19-21
1878 755. . .	23-48-180
1878 769. . .	23-48-112
1878 889. . .	23-32-56
1878 893. . .	8-57-11
1878 910. . .	23-48-98
1878 911. . .	23-48-98
1879 267. . .	23-67-160
1879 270. . .	5-01-2
1879 271. . .	5-01-2
1879 272. . .	5-01-2
1879 273. . .	5-01-2
1879 303. . .	5-39-1
1879 335. . .	9-34-5
1879 336. . .	9-34-5
1879 337. . .	9-34-5
1879 338. . .	9-34-5
1879 339. . .	9-34-5
1879 340. . .	9-34-5
1879 378. . .	9-09-2
1879 379. . .	9-09-2
1879 380. . .	9-09-2
1879 381. . .	9-09-2
1879 382. . .	9-09-2
1879 383. . .	9-09-2
1879 391. . .	8-27-100
1879 499. . .	23-67-25
1879 509. . .	19-57-2
1879 520. . .	10-24-1
1879 526. . .	7-42-1
1879 536. . .	7-42-1
1879 566. . .	8-57-54
1879 579. . .	24-28-195
1879 580. . .	24-28-300
1879 583. . .	23-67-98
1879 594. . .	8-27-85
1879 596. . .	8-27-133
1879 598. . .	23-67-10
1879 599. . .	23-67-164
1879 601. . .	23-67-10
1879 602. . .	23-67-164
1879 606. . .	8-27-77
1879 607. . .	8-27-297
1879 609. . .	8-16-1
1879 617. . .	9-32-2
1879 618. . .	9-32-2
1879 619. . .	9-32-2
1879 620. . .	9-32-2
1879 621. . .	9-32-2
1879 622. . .	9-32-2
1879 627. . .	9-09-2
1879 628. . .	9-09-2
1879 629. . .	9-09-2
1879 630. . .	9-09-2
1879 638. . .	9-34-5
1879 639. . .	9-34-5
1879 640. . .	9-34-5
1879 690. . .	5-03-1
1879 702. . .	9-01-5
1879 703. . .	9-39-1
1879 704. . .	9-39-1
1879 747. . .	9-41-1
1879 827. . .	1-48-684
	24-28-19
1879 861. . .	24-28-63
1879 904. . .	24-01-24
1879 938. . .	8-01-17
1879 944. . .	8-01-4
	8-01-17
1879 945. . .	8-01-4
	8-01-17
1879 960. . .	1-48-106
1880 211. . .	1-48-683
1880 222. . .	1-82-38
1880 442. . .	24-28-210
1880 472. . .	1-48-126
1880 587. . .	8-31-16
1880 642. . .	24-28-220
1880 657. . .	24-28-322
1880 658. . .	24-26-20
1881 591. . .	23-54-169
1881 652. . .	2-08-59
1881 693. . .	9-35-1
1881 694. . .	9-35-1
1881 695. . .	9-35-1
1881 699. . .	9-35-1
1881 700. . .	9-35-1
1881 701. . .	9-35-1
1881 727. . .	8-52-82
1881 746. . .	8-27-278
1881 750. . .	8-27-316
1881 751. . .	8-27-218
1881 766 . .	8-27-316
1881 804. . .	7-14-4
1881 805. . .	7-14-4
	7-14-5
1881 806. . .	7-14-4
1881 810. . .	7-14-5
1881 812. . .	7-14-4
1881 937. . .	24-24-5
1881 938. . .	8-53-150
1881 945. . .	8-27-278
1881 946. . .	8-27-279
1881 949. . .	8-27-279
1881 955. . .	8-27-278
1881 956. . .	8-27-279
1881 965. . .	14-02-40
1882 020. . .	23-64-66
1882 021. . .	23-64-66
1882 028. . .	23-15-1
1882 029. . .	23-15-1
1882 048. . .	23-15-3
1882 049. . .	23-15-3
1882 053. . .	23-15-9
1882 054. . .	23-15-9
1882 055. . .	23-15-14
1882 134. . .	23-40-86
1882 135. . .	23-40-86
1882 146. . .	23-66-235
1882 393. . .	23-34-179
1882 400. . .	23-15-1
1882 401. . .	23-15-1
1882 429. . .	23-34-270
1882 884. . .	23-36-6
1882 885. . .	23-36-6
1882 888. . .	23-20-14
1882 889. . .	23-20-14
1882 892. . .	23-20-14
1882 893. . .	23-20-14
1882 896. . .	23-20-14
1882 897. . .	23-20-14
1882 900. . .	23-20-14
1882 901. . .	23-20-14
1882 915. . .	23-22-145
1882 946. . .	23-26-41
1882 947. . .	23-26-41
1882 955. . .	23-22-86
1882 961. . .	23-15-11
1882 964. . .	23-15-9
1882 965. . .	23-15-9
1882 967. . .	23-15-6
1883 002. . .	23-22-86
1883 003. . .	23-22-86
1883 148. . .	23-22-7
1883 149. . .	23-22-7
1883 156. . .	23-22-7
1883 157. . .	23-22-7
1883 168. . .	23-22-7
1883 169. . .	23-22-7
1883 176. . .	23-22-7
1883 177. . .	23-22-7
1883 268. . .	23-64-308
1883 269. . .	23-64-308
1883 271. . .	23-64-308
1883 272. . .	23-64-308
1883 320. . .	23-32-93
1883 321. . .	23-32-93
1883 342. . .	23-32-17
1883 348. . .	23-32-93
1883 349. . .	23-32-93
1883 494. . .	23-39-5
1883 495. . .	23-39-5
1883 500. . .	23-63-14
	23-63-15
1883 504. . .	23-63-33
1883 512. . .	23-63-15
1883 513. . .	23-63-15
1883 520. . .	23-63-33
1883 554. . .	23-64-41
	23-64-275
1883 568. . .	23-39-5
1883 569. . .	23-39-5
1883 654. . .	23-32-77
1883 740. . .	23-08-12
1883 802. . .	23-15-6
1884 405. . .	14-25-13
	23-15-11
	23-45-41
1884 422. . .	23-20-14
1884 423. . .	23-20-14
1884 426. . .	23-20-14
1884 427. . .	23-20-14
1884 454. . .	23-20-14
1884 455. . .	23-20-14
1884 456. . .	23-20-14
1884 457. . .	23-20-14
1884 488. . .	23-18-25
1884 489. . .	23-18-25
1884 492. . .	23-39-34
1884 493. . .	23-39-34
1884 494. . .	23-39-34
1884 495. . .	23-39-34
1884 506. . .	23-58-476
1884 507. . .	23-58-476
1884 524. . .	23-36-120
1884 525. . .	23-36-120
1884 580. . .	23-58-469
1884 581. . .	23-58-469
1884 584. . .	23-58-394
1884 585. . .	23-58-394
1884 588. . .	23-58-486
1884 589. . .	23-58-486

MyMopar.com

PART NUMBER	CODE
1884 590. .	23-58-486
1884 591. .	23-58-486
1884 608. .	23-58-473
1884 609. .	23-58-473
1884 620. .	23-19-84
1884 621. .	23-19-84
1884 636. .	23-19-82
1884 637. .	23-19-82
1884 680. .	23-34-120
1884 681. .	23-34-120
1884 737. .	23-48-6
1884 740. .	23-48-90
1884 828. .	23-22-53
1884 829. .	23-22-53
1884 837. .	23-19-82
1884 868. .	23-40-92
1884 869. .	23-40-92
1885 608. .	8-20-4
1885 637. .	8-21-1
1885 692. .	24-28-318
1885 826. .	1-48-88
1885 835. .	24-28-59
1885 836. .	1-48-391
1885 901. .	24-28-70
1885 974. .	14-02-32
1885 977. .	21-30-28
1886 025. .	24-28-76
1886 089. .	8-37-459
1886 101. .	24-28-19
1886 109. .	24-28-318
1886 202. .	23-67-80
1886 232. .	24-28-5
1886 249. .	24-28-220
1886 263. .	24-28-210
1886 265. .	24-28-210
1886 266. .	24-28-195
1886 313. .	14-02-26
1886 413. .	24-28-80
1886 949. .	23-41-25
1887 103. .	8-19-3
1887 222. .	8-20-3
1887 257. .	24-28-31
1887 299. .	24-28-175
1887 300. .	24-28-175
1887 319. .	1-82-6
1887 321. .	1-82-6
1887 329. .	8-42-5
1887 364. .	24-28-300
1887 401. .	24-28-195
1887 426. .	1-48-942
1887 501. .	24-28-70
1887 582. .	1-48-227
1887 591. .	1-48-191
	1-48-801
	23-58-534
	23-67-194
1887 602. .	23-67-195
1887 603. .	1-48-309
	23-54-171
	23-58-533
	23-67-161
1887 657. .	21-84-4
1887 667. .	1-48-12
	24-24-164
1887 668. .	1-48-12
1887 669. .	1-48-12
1887 670. .	1-48-12
	24-24-164
1887 671. .	1-48-12
	24-24-164
1887 672. .	24-24-164
1887 673. .	24-24-164
1887 674. .	24-24-164
1887 726. .	8-19-83
1887 757. .	24-28-176
1887 784. .	8-37-20
1887 787. .	8-20-16
1887 789. .	8-42-29
	23-67-195
1887 794. .	14-02-30
1887 798. .	14-02-4
1887 935. .	1-48-191
	1-88-116
	23-58-534
	24-24-156
	24-28-363
1887 946. .	23-54-167
1887 954. .	8-42-5
1887 955. .	8-42-6
1887 962. .	23-67-195
1889 044. .	8-52-150
1889 079. .	8-52-120
1889 080. .	8-52-241
1889 129. .	8-52-41
1889 146. .	8-52-345
1889 147. .	8-52-88
1889 151. .	8-52-375
1889 154. .	8-52-76
1889 200. .	8-52-4
1889 320. .	8-27-292
1889 363. .	8-52-176
1889 517. .	8-36-117
1889 524. .	8-36-114
1889 525. .	8-36-114
1889 683. .	8-27-250
1889 684. .	8-27-250
1889 709. .	8-27-292
1889 715. .	8-27-292
1889 916. .	8-36-83
1889 917. .	8-36-83
1889 921. .	8-36-117
1889 996. .	8-27-259
1893 936. .	23-67-76
1900 762. .	23-26-23
1900 776. .	23-103-34
1900 856. .	23-14-27
1900 857. .	23-14-27
1900 860. .	23-14-27
1900 861. .	23-14-27
1900 870. .	23-14-18
1900 871. .	23-14-19
1900 872. .	23-14-24
1900 878. .	23-02-40
1901 587. .	19-31-19
1901 691. .	23-06-21
1901 727. .	23-06-21
1901 734. .	23-06-10
1901 739. .	23-02-18
1901 764. .	23-06-13
1901 784. .	23-06-4
1901 788. .	5-27-9
1901 789. .	23-33-12
1901 790. .	23-06-13
1901 801. .	5-27-9
1901 802. .	23-33-10
1901 808. .	23-06-4
1901 811. .	23-33-12
1901 826. .	23-02-18
1901 828. .	8-15-33
1901 838. .	23-21-74
1901 844. .	23-02-43
1901 845. .	23-02-43
1901 931. .	23-06-10
1901 938. .	23-02-18
1901 944. .	23-02-19
1901 969. .	23-22-86
1901 970. .	23-22-86
1901 971. .	23-22-86
1901 972. .	23-22-86
1901 973. .	23-22-152
1901 974. .	23-22-145
1901 975. .	23-22-145
1901 978. .	23-26-41
1901 979. .	23-26-41
1901 980. .	23-26-41
1901 981. .	23-26-41
1901 982. .	23-26-41
1901 983. .	23-26-41
1901 984. .	23-26-41
1901 985. .	23-26-41
1901 986. .	23-22-86
1901 987. .	23-22-86
1901 988. .	23-22-86
1901 989. .	23-22-86
1901 990. .	23-22-85
1901 991. .	23-22-85
1901 992. .	23-22-86
1901 993. .	23-22-86
1901 994. .	23-22-53
1901 995. .	23-22-53
1901 996. .	23-22-145
1901 997. .	23-22-145
1901 998. .	23-22-145
1901 999. .	23-22-145
1902 000. .	23-22-86
1902 001. .	23-22-86
1902 091. .	23-33-132
1902 176. .	23-06-13
1902 177. .	23-06-13
1902 201. .	23-06-21
1902 210. .	19-31-1
1902 217. .	23-47-55
1902 223. .	19-31-1
1902 237. .	8-05-6
1902 274. .	23-22-145
1902 275. .	23-22-145
1902 297. .	23-54-195
1902 298. .	8-05-23
1902 306. .	23-22-53
1902 307. .	23-22-53
1902 310. .	23-33-86
1902 311. .	23-33-86
1902 313. .	23-06-49
1902 350. .	23-47-26
1902 374. .	23-02-12
1902 375. .	23-02-11
	23-02-150
1902 399. .	23-33-132
1902 406. .	23-54-180
1902 409. .	23-54-186
1902 410. .	23-54-190
1902 716. .	7-26-5
1902 720. .	7-08-2
1902 763. .	7-26-18
1903 028. .	15-19-2
1903 029. .	15-19-2
1903 036. .	7-31-45
	12-02-5
1903 285. .	15-13-5
1903 385. .	8-50-337
1903 386. .	15-19-2
1903 387. .	8-50-349
1903 396. .	12-04-12
1903 440. .	15-19-2
1903 441. .	15-19-2
1903 457. .	7-26-15
1903 478. .	12-01-16
1903 513. .	15-09-22
1903 600. .	7-08-2
1903 791. .	9-46-31
1903 792. .	9-46-31
1903 884. .	12-06-3
1903 885. .	12-06-3
1904 026. .	12-01-5
1904 027. .	12-01-5
1904 054. .	15-03-3
1904 066. .	12-01-7
1904 067. .	12-01-7
1904 085. .	7-33-1
1904 092. .	7-31-10
1904 104. .	15-11-16
1904 131. .	7-16-22
1904 143. .	15-11-3
1904 146. .	7-33-1
1904 160. .	15-19-2
1904 161. .	15-19-2
1904 173. .	15-11-46
1904 175. .	15-11-3
1904 180. .	12-01-92
1904 194. .	12-01-105
1904 195. .	12-01-105
1904 197. .	15-09-4
1904 198. .	15-09-4
1904 208. .	8-34-362
1904 209. .	8-34-362
1904 212. .	8-34-362
1904 213. .	8-34-362
1904 214. .	8-34-40
1904 216. .	8-34-371
1904 217. .	8-34-371
1904 218. .	8-34-372
1904 220. .	8-34-372
1904 224. .	24-27-5
1904 282. .	8-34-374
1904 283. .	8-34-374
1904 286. .	8-34-300
	8-34-302
1904 287. .	8-34-300
	8-34-302
1904 291. .	7-26-2
1904 385. .	7-16-63
1904 389. .	7-33-1
1904 392. .	7-26-2
1904 397. .	7-31-10
1904 407. .	15-11-58
1904 413. .	15-11-7
1904 415. .	15-11-3
1904 463. .	7-31-10
1904 598. .	15-11-3
1904 643. .	15-11-3
1904 691. .	15-11-3
1904 825. .	15-09-4
1904 839. .	8-34-46
1904 844. .	8-34-40
1904 845. .	8-34-40
1904 896. .	15-13-5
1904 902. .	12-07-1
1904 903. .	12-07-1
1904 908. .	15-11-46
1904 910. .	8-34-362
1904 911. .	8-34-362
1904 932. .	7-26-37
1904 933. .	7-26-37
1904 938. .	7-31-2
1904 950. .	7-14-31
1905 449. .	23-86-35
1909 302. .	23-64-265
1909 303. .	23-64-265
1909 304. .	23-64-265
1909 305. .	23-64-265
1909 316. .	23-34-166
1909 322. .	23-64-66
1909 323. .	23-64-66

MyMopar.com

PART NUMBER	CODE
1909 324.	23-34-80
1909 326.	23-34-122
1909 327.	23-34-122
1909 410.	23-19-82
1909 411.	23-19-82
1909 466.	23-58-228
1909 529.	23-64-12
1909 530.	23-64-12
1909 682.	23-64-174
1909 683.	23-64-174
1909 684.	23-64-174
1909 685.	23-64-174
1909 694.	23-64-265
1909 695.	23-64-265
1909 696.	23-64-265
1909 697.	23-64-265
1909 698.	23-64-265
1909 699.	23-64-265
1909 700.	23-64-265
1909 701.	23-64-265
1909 710.	23-64-265
1909 711.	23-64-265
1909 712.	23-64-265
1909 713.	23-64-265
1909 856.	23-64-273
1909 892.	23-36-5
1909 893.	23-36-5
1909 914.	23-58-78
1909 917.	23-64-278
1909 918.	23-39-15
1909 975.	23-15-17
1912 660.	23-114-14
1914 582.	23-86-13
1916 019.	23-40-92
1916 852.	23-47-8
1918 296.	23-115-4
1918 299.	23-115-5
1918 568.	23-76-27
1918 587.	23-115-6
1919 024.	23-36-53
1919 025.	23-36-53
1919 066.	23-34-167
1919 100.	23-11-1
1919 101.	23-11-1
1919 102.	23-11-3
1919 103.	23-11-3
1919 129.	23-32-17
1919 332.	23-34-120
1919 333.	23-34-120
1919 392.	12-01-9
1919 393.	12-01-9
1919 394.	12-01-9
1919 395.	12-01-9
1919 414.	12-01-7
1919 415.	12-01-7
1919 436.	23-34-234
1919 437.	23-34-234
1919 490.	23-34-120
1919 491.	23-34-120
1919 590.	23-34-354
1921 471.	21-09-19
1921 472.	21-09-23
	21-19-15
1921 473.	21-09-25
1921 475.	23-09-33
1921 480.	21-04-2
1921 481.	21-19-15
1921 482.	21-17-2
1921 486.	21-14-5
1921 487.	21-14-1
1921 491.	21-24-2
1921 492.	21-15-33
1921 493.	21-15-33
1921 494.	21-24-19
1921 495.	21-25-2
1921 496.	21-25-4
1921 497.	21-25-6
1921 499.	21-14-19
1921 501.	21-11-1
1921 503.	21-11-2
1921 504.	21-12-1
1921 506.	21-29-3
1921 507.	21-29-25
1921 508.	21-42-11
1921 513.	21-42-31
1921 516.	21-39-3
1921 517.	21-39-3
1921 518.	21-34-45
1921 519.	21-34-45
1921 520.	21-34-45
1921 521.	21-34-45
1921 522.	21-34-42
1921 523.	21-34-47
1922 183.	23-19-96
1922 203.	19-19-35
1923 508.	21-42-11
1923 509.	21-17-9
1923 765.	5-71-2
1927 232.	4-25-8
	4-25-17
	5-13-10
1929 355.	17-23-57
1931 131.	23-34-13
1936 051.	14-11-34
1937 770.	3-11-2
1937 771.	3-11-1
1940 147.	6-38-23
	19-54-131
1940 202.	5-28-8
1940 238.	17-19-3
1940 300.	9-69-6
1940 301.	9-69-6
1940 304.	9-69-4
1940 392.	13-66-3
1940 393.	13-66-3
1940 447.	3-02-9
1940 596.	3-03-31
1940 604.	3-32-8
1940 621.	5-58-1
1940 622.	5-58-1
1940 859.	12-04-23
1940 860.	1-88-51
1940 892.	12-04-5
1940 894.	12-07-1
1940 895.	12-07-1
1940 920.	13-11-5
1940 961.	13-11-5
1941 031.	13-66-16
1941 032.	13-66-16
1941 033.	13-66-16
1941 034.	13-66-16
1941 600.	21-139-105
1941 601.	21-139-105
1941 602.	21-139-105
1941 603.	21-139-105
1941 623.	21-139-78
1941 624.	21-139-78
1941 636.	21-30-392
1941 649.	9-45-2
1941 667.	9-46-43
1941 699.	19-48-49
	21-42-43
1941 831.	21-129-7
	21-137-202
1941 887.	21-04-11
1942 015.	21-133-20
1942 020.	9-46-130
	21-118-42
1942 021.	21-118-45
1942 041.	21-129-7
1942 054.	21-133-17
1942 057.	21-133-25
1942 063.	21-133-43
1942 064.	21-133-43
1942 065.	21-133-43
1942 069.	16-20-5
1942 070.	21-134-5
1942 074.	21-134-5
1942 076.	21-133-40
1942 080.	21-133-47
1942 081.	21-133-48
	21-134-30
1942 086.	21-134-38
1942 095.	21-136-231
1942 096.	21-136-233
1942 105.	21-118-40
1942 107.	21-118-53
1942 108.	21-138-10
1942 109.	21-138-38
1942 120.	21-136-15
1942 123.	21-137-8
1942 130.	21-137-19
	21-137-59
1942 132.	21-136-23
1942 133.	21-136-30
1942 137.	21-136-47
1942 140.	21-136-47
1942 141.	21-136-52
1942 147.	21-137-35
1942 148.	21-137-50
1942 149.	21-137-53
1942 150.	21-137-56
1942 152.	21-137-47
1942 153.	21-137-200
1942 156.	21-137-205
1942 174.	21-85-61
1942 187.	21-136-236
1942 211.	21-139-9
1942 213.	21-139-64
1942 218.	21-139-63
1942 223.	21-139-12
1942 225.	21-139-24
1942 227.	21-139-135
1942 228.	21-139-135
1942 230.	21-139-135
1942 231.	21-139-108
1942 233.	21-139-144
1942 237.	21-139-154
1942 245.	21-139-63
1942 248.	21-03-6
1942 259.	21-84-28
1942 275.	21-02-1
1942 389.	21-129-13
1942 390.	21-129-24
1942 395.	21-133-15
1942 396.	21-133-17
1942 397.	21-133-17
1942 399.	21-133-22
1942 400.	21-133-43
1942 401.	21-05-12
	21-22-2
1942 402.	21-133-39
1942 403.	21-133-38
1942 404.	21-133-36
1942 413.	21-05-1
1942 414.	21-133-20
1942 415.	21-133-25
1942 418.	21-133-36
1942 419.	21-129-10
1942 421.	21-133-43
1942 422.	21-133-43
1942 423.	21-133-43
1942 434.	21-133-40
1942 438.	21-133-42
1942 439.	21-133-46
1942 443.	21-134-38
1942 444.	21-134-40
1942 446.	21-134-36
1942 447.	21-134-45
1942 448.	21-134-40
1942 450.	21-134-36
1942 451.	21-136-65
1942 454.	21-05-35
1942 455.	21-05-35
1942 456.	21-05-35
1942 458.	21-137-53
1942 463.	21-118-40
1942 466.	21-138-10
1942 467.	21-133-20
1942 477.	21-136-17
1942 478.	21-137-5
1942 481.	21-137-22
1942 482.	21-137-11
1942 485.	21-137-13
1942 486.	21-137-19
1942 487.	21-136-30
1942 491.	21-136-47
1942 493.	21-136-49
1942 494.	21-136-44
1942 496.	21-136-41
1942 497.	21-136-41
1942 498.	21-137-35
1942 499.	21-137-50
1942 501.	21-137-56
1942 502.	21-137-59
1942 530.	21-04-1
1942 543.	21-136-52
1943 547.	8-47-21
1943 674.	5-03-6
1943 691.	5-13-9
1943 733.	22-08-5
1943 777.	19-15-20
1943 796.	5-13-1
1943 797.	5-13-1
1943 798.	5-13-1
1943 799.	5-13-1
1943 806.	5-03-6
1943 813.	5-13-1
1943 828.	4-23-50
1943 832.	5-13-1
1943 833.	4-23-51
1943 838.	5-13-1
1943 839.	5-13-1
1943 840.	5-64-2
1943 997.	17-19-6
1944 011.	19-14-16
1944 092.	5-110-18
1944 154.	5-110-18
1944 171.	14-88-27
1944 177.	14-88-21
1944 194.	14-88-21
1944 200.	14-86-1
1944 203.	14-88-21
1944 206.	14-86-40
1944 361.	17-14-10
1944 407.	13-18-4
1944 616.	9-58-12
1944 652.	10-03-7
1944 712.	9-15-1
1944 773.	9-23-5
1944 792.	19-54-246
1944 854.	9-39-15
1944 865.	9-31-5
1944 866.	9-31-4
1944 916.	7-43-1
1945 173.	9-23-17
1945 197.	14-13-5
	24-28-106

MyMopar.com

PART NUMBER	CODE
1945 318.	9-39-5
1945 319.	9-39-5
1945 320.	9-39-5
1945 321.	9-39-5
1945 384.	7-04-5
	7-04-13
	19-54-115
1945 404.	9-23-10
	19-54-123
1945 473.	9-11-7
1945 543.	14-29-2
1945 561.	14-29-4
1945 749.	3-04-6
1945 751.	3-04-10
1945 768.	3-20-1
1945 777.	19-14-1
1945 782.	19-14-1
1945 831.	16-17-1
1945 836.	16-16-47
1945 920.	8-33-4
1945 945.	13-66-15
1946 141.	9-71-5
1946 297.	16-02-4
1946 343.	21-30-415
1946 357.	5-28-8
1946 377.	6-38-3
1946 401.	4-25-6
1946 415.	4-23-4
1946 416.	4-23-6
1946 434.	4-25-6
1946 445.	4-29-1
1946 468.	4-23-3
1946 502.	21-30-336
1946 505.	21-30-336
1946 508.	21-30-336
1946 511.	21-30-336
1946 514.	21-30-336
1946 547.	21-30-320
1946 637.	11-05-12
1946 639.	11-05-12
1946 648.	11-06-3
1946 923.	14-29-6
1946 992.	9-15-6
1947 132.	7-03-1
1947 165.	9-31-4
1947 221.	10-07-6
1947 225.	10-10-1
1947 235.	9-13-5
1947 236.	9-23-40
1947 301.	14-01-23
	14-11-23
1947 311.	14-01-16
1947 415.	14-01-22
1947 521.	7-44-3
1947 523.	7-44-4
1947 554.	9-23-17
1947 557.	9-11-7
1947 560.	9-17-5
1947 578.	9-03-5
1947 581.	9-23-18
1947 594.	9-43-1
1947 612.	8-27-26
1947 613.	8-27-26
1947 614.	9-43-9
1947 616.	9-43-11
1947 617.	9-43-11
1947 623.	9-39-5
1947 624.	9-39-6
1947 643.	7-48-22
1947 657.	24-25-10
1947 671.	9-05-6
1947 686.	9-03-10
1947 687.	9-03-10
1947 704.	9-42-1
1947 708.	8-36-137
1947 752.	9-48-45
1947 753.	9-48-43
1947 786.	9-16-17
1947 797.	14-29-5
1947 810.	14-30-2
1947 815.	14-01-15
1947 817.	14-01-12
1947 818.	14-01-8
1947 842.	14-39-45
1947 907.	7-02-1
1947 953.	6-10-31
	10-24-23
1947 962.	24-25-258
1948 015.	13-66-24
1948 155.	22-01-5
1948 166.	11-05-1
1948 173.	11-05-4
1948 266.	11-09-3
1948 267.	11-09-3
1948 283.	11-09-3
1948 284.	11-09-3
1948 338.	17-19-3
1948 351.	17-19-20
1948 354.	13-54-15
1948 359.	13-54-4
1948 377.	13-54-15
1948 396.	17-12-12
1948 402.	12-04-33
1948 403.	12-04-33
1948 412.	12-07-1
1948 413.	12-07-1
1948 420.	12-04-4
1948 421.	12-04-4
1948 440.	12-04-4
1948 441.	12-04-4
1948 535.	11-09-3
1948 536.	11-09-3
1948 538.	11-09-3
1948 539.	11-09-3
1948 549.	11-02-4
1948 565.	11-05-4
1948 569.	11-05-4
1948 588.	11-09-3
1948 589.	11-09-3
1948 590.	11-09-3
1948 688.	19-15-4
1948 691.	19-15-4
1948 692.	19-15-4
1948 734.	14-86-40
1948 741.	14-86-55
1948 749.	14-86-35
1948 754.	1-39-2
1948 757.	14-72-9
1948 776.	23-41-5
1948 838.	5-110-18
1948 867.	13-54-4
1948 869.	17-17-3
1948 876.	17-17-4
1948 877.	17-17-5
1948 878.	13-54-15
1948 880.	13-54-15
1948 884.	17-23-56
1948 969.	13-64-6
1949 176.	9-46-33
1949 343.	21-09-30
1949 345.	21-29-3
1949 346.	21-29-25
1949 347.	21-42-11
1949 350.	21-42-31
1949 351.	21-39-3
1949 352.	21-42-11
1949 355.	21-34-45
1949 356.	21-34-42
1949 361.	21-04-2
1949 365.	21-16-3
1949 367.	21-04-1
1949 371.	21-09-2
1949 378.	16-20-1
1949 401.	21-85-5
1949 402.	21-85-5
1949 403.	21-85-5
1949 404.	21-85-5
1949 405.	21-85-5
1949 406.	21-85-5
1949 424.	9-46-21
1949 523.	21-139-76
1949 565.	21-139-48
1949 652.	21-139-50
1949 701.	21-03-28
1949 763.	9-46-8
1949 765.	9-46-21
1949 767.	21-03-6
1949 834.	21-17-2
1949 838.	21-138-10
1949 847.	21-139-33
1949 858.	21-138-15
1949 859.	21-138-15
1949 930.	21-133-39
1949 933.	21-09-30
1949 964.	21-117-1
1950 220.	23-36-66
1950 221.	23-36-66
1950 292.	23-64-242
1950 293.	23-64-242
1950 348.	23-34-27
1950 349.	23-34-27
1950 486.	23-58-497
1950 500.	23-58-76
1950 501.	23-58-76
1950 509.	23-111-37
1950 510.	23-111-37
1950 559.	23-15-17
1950 584.	23-51-41
1950 592.	23-63-126
1950 593.	23-63-126
1950 594.	23-63-126
1950 595.	23-63-126
1950 610.	23-15-1
1950 611.	23-15-1
1950 636.	23-34-120
1950 637.	23-34-120
1950 648.	23-09-58
1950 649.	23-09-58
1950 670.	23-15-7
1950 812.	23-09-51
1950 813.	23-09-51
1950 830.	23-09-35
	23-64-41
1950 844.	23-58-572
1950 845.	23-58-572
1950 848.	23-58-572
1950 849.	23-58-572
1950 852.	23-58-590
1950 853.	23-58-590
1950 897.	23-58-607
1952 194.	23-111-31
1952 195.	23-58-75
1952 204.	23-36-5
1952 205.	23-36-5
1952 214.	23-08-75
	23-36-22
1952 228.	23-19-178
1952 312.	23-58-3
1952 315.	23-58-607
1952 378.	23-42-26
1952 379.	23-42-26
1952 482.	23-48-148
	23-58-607
1952 601.	23-18-27
1952 643.	23-64-314
1952 648.	23-40-86
1952 649.	23-40-86
1952 650.	23-40-92
1952 651.	23-40-92
1952 661.	23-63-112
1952 778.	23-18-40
1952 779.	23-58-607
1952 803.	23-40-82
1952 818.	23-14-18
	23-14-79
1952 852.	23-63-33
1952 853.	23-63-33
1952 878.	23-64-66
1952 879.	23-64-66
1952 880.	23-26-41
1952 881.	23-26-41
1952 896.	23-26-41
1952 897.	23-26-41
1952 916.	23-51-5
1952 917.	23-51-5
1952 918.	23-51-5
1952 919.	23-51-5
1952 924.	23-51-5
1952 925.	23-51-5
1952 938.	23-58-200
1952 939.	23-58-208
1952 946.	23-34-80
1952 947.	23-34-80
1952 948.	23-51-5
1952 949.	23-51-5
1952 955.	23-14-25
1952 960.	23-51-5
1952 961.	23-51-5
1952 962.	23-51-5
1952 963.	23-51-5
1952 976.	23-22-53
1952 977.	23-22-53
1952 983.	23-58-605
1952 984.	23-58-607
1954 020.	23-58-240
1954 048.	23-22-145
1954 058.	23-18-5
1954 059.	23-18-5
1954 083.	23-64-4
1954 094.	23-34-249
1954 095.	23-34-249
1954 100.	23-64-306
1954 101.	23-64-306
1954 102.	23-64-306
1954 103.	23-64-306
1954 104.	23-64-306
1954 105.	23-64-306
1954 106.	23-64-306
1954 107.	23-64-306
1954 110.	23-14-53
1954 124.	23-14-19
1954 125.	23-39-12
1954 144.	23-42-26
1954 145.	23-42-26
1954 216.	23-66-135
1954 217.	23-64-314
1954 234.	23-08-60
1954 235.	23-08-60
1954 286.	23-20-19
1954 287.	23-20-19
1954 288.	23-20-19
1954 289.	23-20-19
1954 342.	23-39-18
1954 343.	23-39-18
1954 346.	23-39-5
1954 347.	23-39-5

MyMopar.com

1962 PASSENGER CAR PARTS CATALOG

PART NUMBER	CODE
1954 348.	23-39-5
1954 349.	23-39-5
1954 393.	23-08-12
1954 397.	23-08-12
1954 446.	23-09-47
1954 544.	23-63-94
	23-63-104
1954 545.	23-63-94
	23-63-104
1954 570.	23-14-27
1954 571.	23-14-27
1954 604.	23-58-67
1954 618.	23-63-33
1954 619.	23-63-33
1954 648.	23-20-65
1954 650.	23-20-65
1954 651.	23-20-65
1954 668.	23-64-66
1954 669.	23-64-66
1954 674.	23-64-275
1954 676.	23-36-53
1954 677.	23-36-53
1954 682.	23-86-10
1954 717.	23-08-54
1954 718.	23-63-33
1954 719.	23-63-33
1954 765.	23-58-603
1954 782.	23-86-35
1954 804.	23-86-19
1954 805.	23-86-19
1954 818.	23-18-26
1954 819.	23-18-26
1954 824.	23-58-475
1954 851.	23-18-29
1954 862.	23-26-41
1954 863.	23-26-41
1954 910.	23-18-20
1954 911.	23-14-53
1954 926.	23-103-10
1954 927.	23-103-10
1954 934.	23-58-591
1954 935.	23-58-591
1954 938.	23-58-573
1954 939.	23-58-573
1954 942.	23-58-573
1959 570.	23-40-85
1959 571.	23-40-85
1959 646.	23-48-65
1959 649.	23-32-46
1960 061.	23-32-88
1960 064.	23-40-86
1960 065.	23-40-86
1960 066.	23-64-280
1960 067.	23-64-280
1960 080.	23-32-49
1960 081.	23-32-49
1960 084.	23-32-40
1960 085.	23-32-40
1960 090.	23-34-26
1960 091.	23-34-26
1960 127.	8-47-76
1960 131.	8-47-67
1960 149.	23-19-74
1960 180.	23-32-17
1960 187.	23-54-142
1960 194.	23-54-140
1960 195.	23-54-144
1960 196.	23-54-145
1960 197.	23-54-137
1960 198.	23-32-27
1960 199.	23-32-27
1960 200.	23-32-27
1960 201.	23-32-27
1960 476.	23-32-58
1960 496.	23-32-106
	23-48-84
1960 501.	23-04-241
1960 503.	23-48-19
1960 513.	23-09-64
1960 540.	23-40-85
1960 541.	23-40-85
1960 542.	23-40-85
1960 543.	23-40-85
1960 560.	23-19-75
1960 602.	14-86-20
1960 624.	23-19-63
1960 627.	23-32-73
	23-48-11
1960 636.	23-40-85
1960 689.	23-32-79
1960 714.	23-19-63
1960 716.	1-48-391
1960 719.	23-48-93
1960 726.	23-36-14
1960 727.	23-36-14
1960 948.	23-64-48
1960 949.	23-64-48
1960 968.	23-54-111
1960 969.	23-54-90
1961 018.	23-40-92
1961 022.	23-34-286
1961 023.	23-34-286
1961 031.	8-05-28
1961 038.	23-19-105
1961 057.	23-19-105
1961 064.	23-40-85
1961 065.	23-40-85
1961 066.	23-51-5
1961 067.	23-51-5
1961 078.	23-19-82
1961 079.	23-19-82
1961 080.	23-19-82
1961 081.	23-19-82
1961 085.	23-48-50
1961 088.	23-58-476
1961 089.	23-58-476
1961 091.	23-48-49
1961 119.	23-54-194
1961 230.	23-48-28
1961 231.	23-48-28
1961 243.	23-86-10
1961 244.	23-86-10
1961 262.	23-15-22
1961 317.	23-54-77
1961 318.	23-54-128
1961 325.	23-32-70
1961 348.	23-86-6
1961 353.	14-87-2
1961 370.	23-11-1
1961 371.	23-11-1
1961 374.	23-11-1
1961 375.	23-11-1
1961 378.	23-09-56
1961 379.	23-09-56
1961 380.	23-09-56
1961 381.	23-09-56
1961 382.	23-09-51
1961 383.	23-09-51
1961 384.	23-34-120
1961 385.	23-34-120
1961 388.	23-34-120
1961 389.	23-34-120
1961 392.	23-09-75
1961 393.	23-09-75
1961 394.	23-09-75
1961 395.	23-09-75
1961 404.	23-11-3
1961 405.	23-11-3
1961 412.	23-34-120
1961 413.	23-34-120
1961 422.	23-40-92
1961 423.	23-40-92
1961 434.	8-56-7
1961 435.	8-56-7
1961 436.	23-48-51
1961 437.	23-48-51
1961 438.	23-48-19
1961 439.	23-48-19
1961 442.	23-34-166
1961 443.	23-34-166
1961 444.	23-34-166
1961 448.	8-56-44
1961 450.	8-56-1
1961 451.	8-56-1
1961 452.	8-56-23
1961 468.	23-40-85
1961 469.	23-40-85
1961 488.	23-48-19
1961 505.	8-56-52
1961 508.	23-64-311
	23-64-314
1961 509.	23-63-112
1961 513.	23-34-304
	23-64-66
1961 584.	23-40-85
1961 585.	23-40-85
1961 600.	23-14-10
1961 601.	23-14-10
1961 606.	23-14-10
1961 607.	23-14-10
1961 618.	23-40-85
1961 619.	23-40-85
1961 646.	23-64-311
	23-64-314
1961 656.	23-86-19
1961 657.	23-86-19
1961 681.	23-64-197
1961 692.	23-48-52
1961 693.	23-48-52
1961 704.	23-18-13
1961 705.	23-18-13
1961 717.	23-18-11
1961 724.	23-18-25
1961 725.	23-18-25
1961 736.	23-18-20
1961 737.	23-19-63
1961 748.	23-18-13
1961 749.	23-18-13
1961 750.	23-18-13
1961 751.	23-18-13
1961 752.	23-18-20
1961 753.	23-18-20
1961 782.	23-64-174
1961 783.	23-64-174
1961 784.	23-64-174
1961 785.	23-64-174
1961 802.	23-64-76
1961 803.	23-64-76
1961 862.	23-18-26
1961 863.	23-18-26
1961 977.	23-64-79
1963 222.	23-64-12
1963 229.	23-64-66
1963 237.	22-20-87
1963 287.	23-82-39
1963 308.	23-20-24
1963 309.	23-20-24
1963 346.	23-22-145
1963 347.	23-22-145
1963 378.	23-20-24
1963 379.	23-20-24
1963 380.	23-20-20
1963 381.	23-20-20
1963 392.	23-64-12
1963 393.	23-64-12
1963 428.	23-64-12
1963 479.	8-11-8
1963 550.	23-112-70
1963 603.	8-05-6
1963 606.	23-86-10
1963 627.	23-34-354
1963 638.	23-18-20
1963 648.	23-20-24
1963 649.	23-20-24
1963 670.	23-22-85
1963 684.	23-63-112
1963 708.	23-22-53
1963 709.	23-22-53
1963 710.	23-22-53
1963 711.	23-22-53
1963 732.	23-09-47
1963 740.	23-34-234
1963 741.	23-34-234
1963 755.	23-32-98
1963 827.	23-41-33
1963 828.	23-41-33
1963 851.	23-41-9
1963 874.	23-41-53
1963 875.	23-41-53
1963 949.	23-41-9
1963 956.	23-22-151
1963 996.	23-51-41
1963 997.	23-51-41
1964 072.	23-82-39
1964 073.	23-58-75
1964 076.	23-58-269
1964 077.	23-58-269
1964 078.	23-58-75
1964 118.	23-11-1
1964 119.	23-11-1
1964 124.	23-11-1
1964 125.	23-11-1
1964 130.	23-11-3
1964 131.	23-11-3
1964 136.	23-11-3
1964 137.	23-11-3
1964 152.	23-22-86
1964 153.	23-22-86
1964 154.	23-22-86
1964 186.	23-34-234
1964 187.	23-34-234
1964 228.	23-64-71
1964 229.	23-64-71
1964 260.	23-58-601
1964 262.	23-103-34
1964 289.	23-41-7
1964 312.	23-41-7
1964 332.	23-103-34
1964 340.	23-34-177
1964 341.	23-34-177
1964 348.	23-22-151
	23-101-32
1964 352.	23-41-4
1964 353.	23-41-4
1964 354.	23-41-4
1964 355.	23-41-4
1964 356.	23-41-4
1964 357.	23-41-4
1964 360.	23-41-4
1964 361.	23-41-4
1964 362.	23-41-4
1964 363.	23-41-4
1964 364.	23-41-4
1964 365.	23-41-4
1964 402.	23-58-555
1964 496.	23-36-53

MyMopar.com

1962 PASSENGER CAR PARTS CATALOG

PART NUMBER	CODE
1964 497.	23-36-53
1964 506.	23-63-173
1964 512.	23-19-177
1964 513.	23-19-177
1964 563.	23-19-63
1964 579.	23-81-8
1964 594.	23-41-4
1964 595.	23-41-4
1964 596.	23-41-4
1964 597.	23-41-4
1964 598.	23-41-4
1964 599.	23-41-4
1964 626.	23-51-41
1964 627.	23-51-41
1964 690.	23-41-281
1964 691.	23-41-281
1964 696.	23-41-281
1964 697.	23-41-281
1964 747.	23-48-76
	23-48-166
1964 782.	23-18-13
1964 783.	23-18-13
1964 818.	23-41-53
1964 819.	23-41-53
1964 821.	23-41-281
1964 823.	23-41-281
1964 834.	23-18-13
1964 835.	23-18-13
1964 836.	23-18-13
1964 837.	23-18-13
1964 895.	23-58-265
1964 896.	23-58-236
1965 887.	23-112-46
1966 067.	23-51-5
1969 032.	23-45-20
1969 366.	23-47-66
1969 367.	23-47-66
1969 619.	23-112-18
1971 043.	1-48-158
1971 057.	1-87-8
1971 061.	1-48-572
1971 091.	1-48-158
	1-87-21
1971 162.	1-04-7
1971 224.	8-40-8
1971 314.	23-41-167
1971 326.	23-41-167
1971 463.	24-28-368
1971 478.	23-18-102
	23-41-184
1971 519.	8-37-90
1971 521.	1-48-203
	1-48-309
	1-88-123
	8-05-24
	8-42-26
	23-54-171
	23-58-533
	24-24-8
	24-24-137
1971 522.	23-33-129
1971 644.	1-87-180
1971 676.	1-48-8
1971 693.	1-48-144
	24-01-62
1971 731.	8-30-1
1971 732.	8-30-1
1971 733.	8-30-1
1971 739.	1-82-29
1971 740.	8-30-1
1971 742.	8-20-4
	14-02-36
1971 750.	8-50-98
1971 751.	8-50-133
1971 753.	8-50-101
1971 833.	8-56-2
1971 836.	1-48-144
1971 873.	8-35-85
1971 879.	8-42-10
1971 896.	8-31-3
1971 931.	8-12-2
	8-31-10
1971 938.	24-24-140
1971 940.	8-33-90
1971 956.	24-28-8
1972 025.	1-87-336
1972 028.	1-48-90
1972 049.	24-24-85
1972 052.	8-56-2
1972 065.	1-88-159
1972 066.	1-88-120
1972 068.	1-88-117
1972 077.	8-35-95
1972 084.	8-35-85
1972 092.	23-41-167
1972 136.	1-06-3
1972 137.	1-06-4
1972 146.	1-48-264
	23-54-203
1972 196.	8-50-82
1972 201.	8-50-126
1972 207.	8-50-104
1972 241.	8-37-317
1972 316.	23-54-167
	23-58-532
1972 318.	23-58-532
1972 324.	24-28-55
1972 329.	8-12-2
1972 351.	21-84-1
1972 352.	21-84-4
1972 359.	24-28-73
1972 360.	24-28-73
1972 372.	24-28-387
1972 391.	8-33-90
1972 405.	1-87-292
1972 426.	1-13-10
	1-30-3
	8-13-2
1972 469.	1-48-194
1972 487.	24-24-140
1972 488.	24-24-140
1972 489.	23-58-543
1972 499.	24-24-156
1972 512.	1-82-43
1972 548.	1-48-309
	23-54-171
	23-58-533
	24-28-357
1972 581.	1-82-43
1972 594.	24-28-364
1972 598.	23-47-446
1972 669.	8-42-25
1972 757.	8-37-200
1972 772.	1-48-300
1972 774.	1-48-300
1972 779.	24-01-36
1972 781.	24-01-36
1972 789.	24-28-48
1972 817.	24-28-359
1972 898.	1-48-192
	23-54-170
1972 899.	23-58-543
1972 902.	14-02-3
1972 906.	14-02-23
1972 938.	23-18-115
1972 939.	23-18-115
1972 940.	23-18-115
1972 952.	23-18-107
1972 954.	23-18-107
1972 956.	24-28-73
1972 960.	24-28-75
1972 961.	24-28-75
1972 972.	8-34-177
1972 979.	24-28-72
1973 174.	23-36-118
1973 175.	23-36-118
1973 206.	23-32-17
1973 211.	23-32-48
1973 226.	23-32-48
1973 232.	23-32-93
1973 233.	23-32-93
1973 290.	23-36-5
1973 291.	23-36-5
1973 304.	23-32-105
1973 305.	23-32-105
1973 308.	23-32-105
1973 309.	23-32-105
1973 312.	23-32-105
1973 313.	23-32-105
1973 360.	23-36-118
1973 361.	23-36-118
1973 362.	23-36-118
1973 363.	23-36-118
1974 843.	23-102-3
1976 132.	23-108-84
1976 133.	23-108-84
1977 448.	23-58-365
1977 449.	23-58-364
1983 786.	24-28-22
1985 513.	7-02-1
1985 536.	24-28-195
1985 537.	24-28-210
1985 539.	24-28-210
1989 202.	24-25-127
1990 584.	24-25-94
1990 598.	24-25-94
1991 079.	23-64-308
1991 576.	24-28-175
1991 581.	24-28-220
1991 619.	24-28-300
1992 947.	24-25-133
1993 674.	24-28-8
1993 677.	24-28-8
1993 725.	24-25-10
1994 406.	24-25-110
1994 408.	24-25-137
1994 410.	24-25-135
1996 845.	24-25-114
1997 446.	24-25-110
1997 448.	24-25-107
1997 449.	24-25-107
1997 541.	24-28-98
1997 542.	24-28-78
1997 545.	24-28-98
1997 553.	24-28-248
1997 564.	24-28-241
1997 565.	19-54-115
1998 587.	19-54-116
1998 590.	24-28-98
1998 591.	24-28-98
1998 598.	24-24-5
1998 604.	24-28-53
1998 633.	24-28-8
1998 644.	24-26-20
1998 645.	24-26-26
1999 149.	24-28-300
1999 150.	24-28-5
1999 171.	7-08-2
1999 172.	7-08-2
1999 180.	7-06-14
1999 181.	7-06-1
1999 182.	24-25-45
1999 184.	8-28-15
1999 185.	24-25-15
1999 502.	24-25-84
2000 083.	24-25-84
2002 739.	24-25-107
2002 740.	24-25-107
2002 768.	24-25-5
2003 056.	24-25-15
2003 057.	24-28-5
2003 058.	24-25-20
2003 059.	7-02-16
	24-28-204
2003 060.	24-25-45
2003 062.	24-25-15
2003 063.	24-28-8
2003 074.	24-28-220
2003 095.	24-28-8
2003 099.	24-25-107
2003 103.	24-25-15
2003 104.	24-25-15
2004 747.	24-27-5
2004 754.	24-27-5
2004 756.	24-26-100
2004 766.	24-25-35
2004 767.	24-25-45
2004 773.	24-26-100
2006 374.	24-25-35
2006 375.	24-25-45
2006 394.	24-28-19
2006 395.	24-25-232
2006 396.	24-25-20
2007 102.	24-25-107
2007 168.	24-25-107
2008 388.	24-25-135
2013 028.	24-28-8
2070 012.	3-02-1
2070 023.	3-06-5
2070 024.	3-06-6
2070 025.	3-07-1
2070 026.	3-07-2
2070 027.	3-08-1
2070 041.	5-13-9
2070 082.	3-11-3
2070 084.	3-11-3
2070 086.	3-11-3
2070 088.	3-11-3
2070 090.	3-11-3
2070 092.	3-11-3
2070 094.	3-22-26
2070 095.	3-22-26
2070 096.	3-22-26
2070 097.	3-22-26
2070 098.	3-22-26
2070 099.	3-22-26
2070 100.	3-22-26
2070 101.	3-22-26
2070 102.	3-22-26
2070 103.	3-22-26
2070 104.	3-22-26
2070 105.	3-22-26
2070 106.	3-22-26
2070 107.	3-22-26
2070 108.	3-22-26
2070 109.	3-22-26
2070 110.	3-22-26
2070 113.	3-22-45
2070 117.	16-20-2
2070 119.	3-03-29
2070 120.	3-03-30
2070 122.	3-03-36
2070 130.	3-35-14
2070 142.	3-32-1
2070 143.	3-32-1
2070 148.	3-06-5
2070 153.	3-33-8
2070 158.	22-05-14

MyMopar.com

PART NUMBER	CODE
2070 159.	22-05-14
2070 231.	3-02-1
2070 242.	3-06-5
2070 270.	3-02-1
2070 300.	3-19-1
2070 311.	5-58-1
2070 316.	3-22-24
2070 317.	3-22-25
2070 318.	3-22-24
2070 319.	3-22-25
2070 369.	3-02-20
2070 441.	3-11-3
2070 442.	3-11-3
2070 443.	3-11-3
2070 444.	3-11-3
2070 445.	3-11-3
2070 446.	3-11-3
2070 447.	3-11-3
2070 448.	3-11-3
2070 449.	3-11-3
2070 450.	3-11-3
2070 454.	3-22-26
2070 455.	3-22-26
2070 456.	3-22-26
2070 457.	3-22-26
2070 458.	3-22-26
2070 459.	3-22-26
2070 460.	3-22-26
2070 461.	3-22-26
2070 462.	3-22-26
2070 463.	3-22-26
2070 464.	3-22-26
2070 465.	3-22-26
2070 466.	3-22-26
2070 467.	3-22-26
2070 468.	3-22-26
2070 469.	3-22-26
2070 514.	3-02-20
2070 537.	3-04-6
2070 539.	3-02-1
2070 563.	3-19-1
2070 564.	3-19-1
2070 565.	3-19-1
2070 569.	3-19-1
2070 570.	3-19-1
2070 573.	3-32-1
2070 579.	3-03-1
2070 583.	3-03-1
2070 596.	3-19-1
2070 597.	3-03-1
2070 619.	3-03-1
2070 620.	3-03-1
2070 621.	3-03-1
2070 645.	17-19-20
2070 654.	3-03-1
2070 663.	3-32-8
2070 689.	3-19-1
2070 693.	3-03-1
2070 695.	3-32-1
2070 704.	3-04-6
2070 706.	3-04-6
2070 709.	3-22-26
2070 771.	3-03-1
2070 774.	3-03-1
2070 782.	3-03-3
2070 797.	3-03-1
2070 798.	3-03-1
2070 808.	3-19-1
2070 809.	3-19-1
2070 811.	3-03-1
2070 813.	3-03-1
2070 816.	3-19-1
2070 817.	3-19-1
2070 820.	3-06-6
2070 821.	3-07-2
2070 824.	3-03-2
2070 845.	3-09-3
2070 866.	3-33-4
2070 868.	3-33-4
2070 870.	3-33-4
2070 908.	3-03-1
2070 911.	3-03-1
2070 915.	3-19-1
2070 916.	3-19-1
2070 932.	5-13-7
2070 933.	5-13-7
2071 017.	16-02-1
2071 043.	5-102-2
2071 060.	5-39-3
2071 075.	14-02-33
2071 094.	4-23-36
2071 098.	4-25-1
2071 101.	4-23-1
2071 114.	4-25-7
2071 130.	23-33-231
2071 131.	4-25-3
2071 132.	4-23-3
2071 134.	4-23-1
2071 135.	4-23-1
2071 146.	23-33-236
2071 150.	4-25-9
2071 154.	4-25-14
2071 159.	23-33-231
2071 173.	2-14-13
2071 204.	2-08-7
2071 211.	2-10-60
2071 255.	2-08-61
2071 417.	2-10-58
2071 432.	2-03-3
2071 433.	2-03-3
2071 443.	2-10-59
2071 452.	2-08-5
2071 453.	2-08-5
2071 468.	2-10-6
2071 469.	2-10-7
2071 714.	17-23-56
2071 760.	13-54-4
2071 761.	17-17-4
2071 763.	17-17-3
2071 764.	13-54-15
2071 766.	17-11-7
2071 767.	17-11-7
2071 771.	17-15-1
2071 774.	17-19-20
2071 778.	17-19-3
2071 787.	17-15-1
2072 031.	19-15-35
2072 060.	19-15-60
2072 441.	2-07-2
2072 571.	19-27-50
2072 573.	19-27-2
2072 577.	19-27-31
2072 609.	5-13-1
2072 612.	5-62-7
2072 615.	5-64-2
2072 616.	5-64-1
2072 625.	5-69-1
2072 628.	5-13-1
2072 629.	5-13-1
2072 632.	5-64-1
2072 636.	5-71-1
2072 637.	5-71-2
2072 643.	4-26-26
2072 644.	4-26-27
2072 646.	4-26-18
2072 655.	5-70-1
2072 656.	5-70-1
2072 658.	5-67-1
2072 664.	5-03-6
2072 670.	5-03-6
2072 675.	5-26-5
2072 676.	22-04-14
2072 679.	5-69-1
2072 681.	5-13-9
2072 682.	5-13-9
2072 684.	5-13-22
2072 689.	4-26-17
2072 707.	22-06-18
2072 718.	22-08-57
2072 719.	5-03-23
2072 728.	22-05-24
2072 729.	22-05-24
2072 731.	22-06-5
2072 733.	22-06-14
2072 750.	22-05-14
2072 751.	22-05-14
2072 794.	22-03-1
2072 795.	22-03-1
2072 816.	5-27-6
2072 822.	5-27-21
2072 831.	6-38-14
2072 849.	6-24-1
2072 852.	6-19-2
2072 855.	6-27-5
2072 894.	6-35-1
2072 896.	6-38-26
2072 900.	6-22-15
2072 901.	6-22-19
2072 902.	6-22-1
2073 023.	5-62-1
2073 134.	4-23-15
2073 205.	4-23-6
	11-10-18
	14-14-13
2073 342.	22-01-5
2073 361.	22-08-5
2073 553.	21-30-417
2073 554.	21-30-414
2073 555.	21-30-421
2073 556.	21-30-423
2073 557.	21-30-422
2073 558.	21-30-423
2073 565.	21-30-427
2073 574.	21-30-426
2073 632.	6-43-7
2073 634.	5-27-2
2073 642.	6-50-1
2073 684.	6-13-4
2073 687.	6-20-14
2073 792.	11-06-8
2073 794.	11-10-3
2073 797.	11-10-42
2073 812.	11-10-17
2073 931.	14-86-42
2073 938.	14-86-83
2073 990.	1-39-2
2073 998.	14-86-35
2074 005.	14-86-1
2074 015.	14-88-21
2074 016.	14-86-40
2074 017.	14-86-40
2074 032.	14-88-27
2074 036.	14-88-21
2074 050.	1-39-2
2074 054.	14-86-35
2074 056.	14-86-1
2074 063.	14-86-57
2074 087.	13-33-62
2074 089.	13-36-5
2074 090.	13-36-5
2074 214.	13-64-149
2074 225.	13-64-5
	13-66-15
2074 226.	13-66-16
2074 227.	13-66-16
2074 228.	13-64-4
2074 229.	13-64-4
2074 230.	13-64-4
2074 231.	13-64-4
2074 233.	13-68-6
2074 235.	13-68-6
2074 253.	13-64-3
2074 255.	13-66-3
2074 386.	23-32-20
2074 393.	23-32-18
2074 394.	23-32-18
2074 506.	21-30-413
2074 508.	21-30-435
2074 521.	19-48-16
	21-30-428
2074 525.	21-30-425
2074 526.	21-30-425
2074 534.	21-30-432
2074 535.	21-30-428
2074 539.	21-30-430
2074 543.	21-30-429
2074 547.	21-30-438
2074 553.	21-30-431
2074 554.	21-30-437
2074 930.	5-100-2
2074 934.	5-105-1
2074 965.	5-39-18
2075 001.	5-100-1
2075 009.	6-22-4
2075 142.	13-72-1
2076 069.	23-67-79
2076 071.	23-67-79
2076 081.	23-67-76
2076 084.	23-67-139
2076 085.	23-67-140
2076 088.	1-48-608
2076 117.	1-48-46
2076 129.	1-48-144
2076 130.	1-48-144
2076 140.	1-48-707
2076 145.	8-05-17
	8-53-298
2076 146.	23-67-198
2076 175.	1-82-25
2076 216.	1-82-4
2076 217.	1-48-366
2076 232.	5-31-13
	5-102-11
	6-35-17
	14-02-10
	15-11-9
	19-31-15
	23-67-95
2076 241.	23-67-86
2076 249.	1-88-170
2076 250.	1-88-6
2076 251.	1-88-17
	1-88-107
2076 252.	1-87-30
2076 305.	8-34-177
2076 306.	8-34-180
2076 322.	1-48-126
2076 327.	1-48-867
2076 352.	1-48-608
2076 354.	1-48-611
2076 355.	23-67-18
2076 389.	1-48-126
2076 400.	1-48-88
2076 405.	1-48-254
	24-29-14
2076 412.	23-54-178
2076 423.	1-48-164
2076 474.	8-20-8
2076 543.	8-33-90

MyMopar.com

PART NUMBER	CODE
2076 617.	23-67-79
2076 618.	23-67-79
2076 626.	23-54-167
2076 656.	21-84-4
2076 666.	1-48-1
2076 675.	23-17-51
2076 678.	23-67-5
2076 679.	23-67-5
2076 718.	1-87-12
2080 058.	23-33-12
2080 114.	23-76-5
2080 115.	23-76-5
2080 125.	23-22-148
2080 181.	23-02-1
2080 184.	23-02-1
2080 201.	23-06-14
	23-32-51
	24-28-393
2080 234.	23-02-43
2080 238.	23-33-65
2080 284.	23-22-148
2080 285.	23-22-160
2080 306.	23-22-145
2080 307.	23-22-145
2080 314.	23-22-53
2080 315.	23-22-53
2080 321.	23-06-28
2080 329.	23-47-383
2080 330.	23-47-384
2080 331.	23-47-384
2080 362.	23-33-86
2080 382.	23-26-45
2080 383.	23-26-45
2080 384.	23-26-45
2080 385.	23-26-45
2080 386.	23-26-45
2080 387.	23-26-45
2080 388.	1-48-26
	23-33-227
	24-24-170
2080 398.	23-86-35
2080 399.	23-86-35
2080 400.	23-86-35
2080 411.	23-21-14
2080 413.	23-02-62
	23-02-78
2080 438.	23-26-47
2080 439.	23-26-47
2080 456.	23-47-385
2080 459.	23-06-10
2080 466.	23-47-386
2080 478.	23-47-387
2080 480.	23-06-14
2080 488.	23-06-41
2080 489.	23-21-66
2080 516.	23-108-98
2080 517.	23-108-98
2080 536.	6-50-10
2080 568.	4-25-2
2080 596.	23-02-149
2080 639.	23-02-1
2080 641.	23-02-1
2080 644.	23-26-47
2080 645.	23-26-47
2080 649.	23-33-10
2080 652.	23-07-169
2080 653.	23-07-169
2080 670.	23-02-89
2080 671.	23-02-89
2080 673.	23-54-75
2080 702.	8-37-178
2080 703.	8-37-178
2080 704.	23-33-129
2080 705.	8-37-178
2080 720.	19-31-24
2080 727.	23-82-5
2080 732.	23-108-98
2080 733.	23-108-98
2080 737.	23-108-98
2080 747.	5-27-9
2080 766.	23-31-124
2080 767.	23-31-124
2080 768.	23-31-124
2080 774.	23-21-14
2080 776.	23-21-26
2080 782.	23-22-145
2080 783.	23-22-145
2080 794.	23-54-144
2080 824.	23-82-6
2080 827.	23-47-6
2080 828.	23-47-6
2080 858.	23-22-53
2080 859.	23-22-53
2080 860.	23-22-86
2080 868.	23-108-98
2080 869.	23-108-98
2080 874.	23-21-45
2080 884.	23-108-98
2080 885.	23-108-98
2080 886.	23-108-98
2080 887.	23-108-98
2080 897.	23-21-14
2080 899.	23-33-10
2080 910.	23-22-86
2080 936.	23-31-119
2080 940.	23-33-109
2080 942.	23-33-147
2080 944.	23-45-33
2080 945.	23-45-33
2080 946.	23-47-451
2080 951.	23-47-16
2080 958.	23-86-19
2080 959.	23-86-19
2080 982.	23-08-13
2081 004.	23-32-93
2081 005.	23-32-93
2081 013.	17-19-4
	23-32-109
2081 016.	23-32-17
2081 029.	23-32-24
2081 058.	23-32-115
2081 059.	23-32-115
2081 060.	23-32-115
2081 061.	23-32-115
2081 074.	14-01-25
2081 114.	23-66-135
2081 117.	23-66-135
2081 146.	23-09-67
2081 150.	23-34-235
2081 151.	23-34-235
2081 154.	23-34-234
2081 155.	23-34-234
2081 158.	23-34-27
2081 159.	23-34-27
2081 163.	23-34-27
2081 168.	23-36-53
2081 169.	23-36-53
2081 174.	23-34-229
2081 176.	23-36-66
2081 177.	23-36-66
2081 182.	23-54-5
2081 183.	23-54-5
2081 196.	23-64-311
2081 197.	23-64-311
2081 198.	23-64-311
2081 204.	23-34-166
2081 205.	23-34-167
2081 209.	23-34-17
2081 214.	23-19-70
2081 217.	23-34-302
2081 220.	23-40-86
2081 221.	23-40-86
2081 224.	23-40-92
2081 225.	23-40-92
2081 226.	23-64-66
2081 227.	23-64-66
2081 230.	23-34-301
2081 232.	23-40-85
2081 233.	23-40-86
2081 238.	23-40-85
2081 239.	23-40-85
2081 248.	23-64-66
2081 249.	23-64-66
2081 252.	23-59-56
2081 253.	23-59-56
2081 254.	23-59-56
2081 255.	23-59-56
2081 257.	23-64-314
2081 298.	23-14-47
2081 299.	23-14-47
2081 316.	23-18-13
2081 317.	23-18-13
2081 320.	23-15-1
2081 321.	23-15-1
2081 326.	23-15-9
2081 340.	23-10-1
2081 355.	23-64-308
2081 356.	23-63-126
2081 357.	23-63-126
2081 362.	23-63-14
2081 370.	23-64-308
2081 379.	23-64-242
2081 402.	23-22-7
2081 403.	23-22-7
2081 438.	23-39-5
2081 439.	23-39-5
2081 440.	23-18-5
2081 441.	23-18-5
2081 444.	23-15-3
2081 445.	23-15-3
2081 450.	23-15-1
2081 451.	23-15-1
2081 456.	23-10-1
2081 465.	23-63-14
2081 467.	23-64-308
2081 470.	23-09-58
2081 471.	23-09-58
2081 478.	23-22-7
2081 486.	23-19-178
2081 503.	23-63-172
2081 533.	23-64-314
2081 542.	23-08-54
2081 543.	23-08-54
2081 546.	23-63-15
2081 547.	23-64-308
2081 555.	23-64-311
2081 566.	23-32-34
2081 596.	23-15-9
2081 597.	23-15-9
2081 622.	23-10-17
2081 624.	23-39-5
2081 625.	23-39-5
2081 644.	23-39-18
2081 645.	23-39-18
2081 648.	23-64-242
2081 649.	23-64-242
2081 658.	23-32-46
2081 718.	23-36-125
2081 719.	23-36-125
2081 725.	23-09-67
2081 728.	23-34-302
2081 729.	23-34-302
2081 730.	23-34-302
2081 731.	23-34-302
2081 732.	23-40-96
2081 733.	23-40-96
2081 774.	23-54-150
2081 775.	23-54-72
2081 781.	23-54-109
2081 808.	23-32-27
2081 809.	23-32-27
2081 810.	23-32-27
2081 811.	23-32-27
2081 826.	23-18-20
2081 830.	23-64-311
2081 831.	23-64-311
2081 838.	23-66-65
2081 839.	23-66-65
2081 840.	2-08-63
	23-32-108
2081 841.	2-08-63
	23-32-108
2081 860.	23-19-74
2081 950.	23-18-25
2081 951.	23-18-25
2081 958.	23-91-20
2081 959.	23-91-20
2082 012.	12-04-4
	23-54-63
2082 020.	15-19-2
2082 021.	15-19-2
2082 023.	12-04-4
2082 064.	7-26-30
2082 065.	7-26-30
2082 070.	15-19-8
2082 080.	23-34-277
2082 086.	15-11-46
2082 120.	8-34-40
2082 121.	8-34-40
2082 172.	8-47-8
2082 207.	23-54-141
2082 210.	23-54-4
2082 219.	23-06-15
2082 226.	23-40-82
2082 244.	23-48-19
2082 245.	23-48-19
2082 248.	23-54-24
2082 249.	23-66-235
2082 264.	23-09-52
2082 265.	23-09-52
2082 275.	23-63-112
2082 294.	1-48-399
2082 311.	23-32-51
2082 340.	23-33-65
2082 385.	23-14-27
2082 391.	23-42-46
2082 394.	23-09-64
2082 395.	23-64-10
2082 396.	23-64-10
2082 397.	23-42-46
2082 402.	23-48-98
2082 403.	23-48-98
2082 412.	23-18-5
2082 413.	23-18-5
2082 431.	23-34-301
2082 438.	23-34-16
2082 456.	23-63-33
2082 474.	23-18-13
2082 475.	23-18-13
2082 485.	23-54-183
2082 504.	23-86-19
2082 505.	23-86-19
2082 511.	23-14-14
2082 520.	23-08-76
2082 521.	23-08-76
2082 530.	23-34-354
2082 545.	23-47-66

MyMopar.com

PART NUMBER	CODE
2082 571	23-40-82
2082 579	8-05-23
2082 609	23-08-63
2082 616	23-18-26
2082 641	23-08-12
2082 642	23-54-4
2082 643	23-54-4
2082 646	23-34-120
2082 647	23-34-120
2082 648	23-34-120
2082 649	23-34-120
2082 652	23-40-85
2082 653	23-40-85
2082 654	23-40-86
2082 655	23-40-86
2082 676	23-103-10
2082 677	23-103-10
2082 686	23-47-6
2082 687	23-26-58
2082 688	15-09-4
2082 689	23-54-17
2082 724	23-15-3
2082 725	23-15-3
2082 727	23-54-4
2082 752	23-54-134
2082 753	23-54-134
2082 764	23-09-67
2082 786	23-54-142
2082 791	23-54-140
2082 795	23-54-135
2082 830	23-32-65
2082 842	23-32-8
2082 843	23-32-15
2082 867	7-26-34
	23-48-76
2082 878	12-01-15
2082 881	23-22-9
	23-22-55
2082 891	23-14-18
	23-14-79
2082 904	23-54-180
2082 906	23-54-199
2082 907	23-54-190
2082 908	23-54-196
2082 924	23-26-14
2082 925	23-26-14
2082 965	15-03-5
2082 971	23-54-141
2082 973	23-63-33
2082 974	23-63-33
2082 978	23-21-14
2082 987	23-32-86
	23-54-198
2082 989	23-54-74
2083 000	23-33-10
2083 021	23-02-19
2083 033	23-02-21
2083 049	23-33-10
2083 061	23-06-21
2083 086	23-22-145
2083 087	23-22-145
2083 096	23-06-4
2083 099	23-02-18
2083 100	23-02-18
2083 101	23-54-133
2083 116	23-54-193
2083 117	23-54-193
2083 126	23-48-19
2083 127	23-36-30
2083 136	23-59-37
2083 137	23-59-37
2083 149	23-18-40
2083 162	23-63-100
2083 163	23-63-100
2083 170	12-02-5
2083 171	12-02-5
2083 190	22-20-29
2083 227	23-96-3
2083 244	23-26-47
2083 245	23-26-47
2083 246	23-26-47
2083 247	23-26-47
2083 248	23-26-47
2083 249	23-26-47
2083 292	23-82-30
2083 296	23-64-306
2083 297	23-64-306
2083 298	23-64-306
2083 299	23-64-306
2083 862	23-76-3
	23-76-59
	23-76-66
2083 921	23-20-29
2084 005	9-09-2
2084 006	9-09-2
2084 007	9-09-2
2084 008	9-09-2
2084 029	9-41-4
2084 030	9-41-4
2084 031	9-41-4
2084 032	9-41-4
2084 045	2-10-57
2084 054	1-48-11
	24-24-112
2084 055	1-48-11
2084 064	8-36-1
2084 065	8-36-1
2084 072	8-37-177
2084 088	8-52-214
2084 090	8-52-344
2084 091	8-52-341
2084 093	8-52-49
2084 094	8-52-354
2084 163	14-41-3
2084 166	14-35-1
2084 215	19-15-39
2084 217	8-36-1
2084 219	8-36-1
2084 236	17-16-1
2084 250	6-17-3
2084 257	5-03-9
2084 258	14-67-1
2084 295	24-28-379
2084 303	8-27-77
2084 304	8-50-103
2084 347	9-50-1
2084 354	10-07-3
2084 355	10-07-2
2084 380	9-32-2
2084 381	9-32-2
2084 382	9-32-2
2084 383	9-32-2
2084 384	9-34-5
2084 385	9-34-5
2084 386	9-34-5
2084 387	9-34-5
2084 388	9-34-5
2084 389	9-34-5
2084 390	9-34-5
2084 403	9-10-5
2084 404	9-10-5
2084 405	9-10-5
2084 411	9-11-1
2084 415	10-07-3
2084 416	9-50-1
2084 421	8-16-1
2084 424	8-16-1
2084 425	8-16-1
2084 427	8-36-49
2084 428	8-36-49
2084 444	23-41-106
2084 445	23-41-106
2084 446	23-41-106
2084 448	8-27-137
2084 450	24-24-5
2084 456	8-36-1
2084 458	8-36-1
2084 460	1-48-854
2084 461	1-48-854
2084 524	23-34-27
2084 525	23-34-27
2084 526	23-34-27
2084 527	23-34-27
2084 528	23-34-27
2084 529	23-34-27
2084 538	23-34-80
2084 539	23-34-80
2084 628	22-01-5
2084 645	8-36-1
2084 653	8-27-352
2084 654	8-27-71
2084 655	8-27-85
2084 666	8-52-140
2084 672	8-42-2
2084 673	8-29-17
2084 730	14-41-3
2084 733	14-41-3
2084 788	5-63-1
2084 789	5-63-1
2084 790	5-63-3
2084 791	5-63-3
2084 794	9-58-1
2084 797	9-58-1
2084 810	9-09-2
2084 811	9-09-2
2084 812	9-09-2
2084 813	9-09-2
2084 814	9-09-2
2084 815	9-09-2
2084 816	9-09-2
2084 817	9-09-2
2084 818	17-12-4
2084 819	17-12-4
2084 820	17-12-4
2084 821	17-12-4
2084 822	17-12-4
2084 823	17-12-4
2084 824	17-12-4
2084 825	17-12-4
2084 829	9-09-2
2084 830	9-09-2
2084 831	9-09-2
2084 832	9-09-2
2084 833	9-09-2
2084 834	9-09-2
2084 835	9-09-2
2084 836	9-09-2
2084 839	19-01-4
2084 840	19-01-4
2084 847	8-35-4
2084 848	1-48-599
2084 849	23-41-106
2084 857	8-27-308
2084 859	14-73-1
2084 862	1-48-599
2084 866	8-27-279
2084 867	8-27-133
2084 868	8-27-308
2084 869	8-27-11
2084 870	8-27-18
2084 884	23-67-98
2084 885	23-67-98
2084 908	17-11-3
2084 909	17-11-3
2084 918	2-10-57
2084 920	2-08-59
2085 242	23-103-10
2085 243	23-103-10
2085 252	23-14-79
2085 482	23-63-14
	23-63-20
2085 485	23-02-82
2085 514	23-02-89
2085 515	23-02-89
2085 660	23-76-5
2085 661	23-76-5
2085 710	23-63-14
2085 711	23-63-14
2085 712	23-63-14
2085 713	23-63-14
2085 722	23-63-14
2085 723	23-63-14
2085 780	23-63-14
2085 781	23-63-14
2085 862	23-14-51
2085 899	23-14-51
2086 036	23-14-21
2086 047	8-35-115
2086 048	23-17-24
2086 050	23-17-5
2086 051	23-06-28
2086 056	23-22-86
2086 057	23-22-86
2086 058	23-26-41
2086 059	23-26-41
2086 114	23-02-81
2086 142	23-86-24
2086 143	23-86-24
2086 145	23-86-24
2086 146	23-86-24
2086 148	23-86-24
2086 168	23-22-85
2086 210	23-76-7
2086 275	23-21-14
2086 360	23-26-23
2086 362	23-26-23
2086 461	23-38-16
2086 597	8-05-28
2086 611	23-02-1
	23-02-145
2086 612	23-91-6
2086 613	23-91-6
2086 634	1-87-6
2086 702	23-131-205
2086 703	23-131-205
2086 838	23-38-22
2088 680	23-86-24
2088 681	23-86-24
2092 212	23-115-10
2092 246	23-115-4
2093 030	23-64-75
2093 031	23-64-75
2093 048	23-64-78
2093 049	23-64-78
2093 136	23-23-14
2093 137	23-23-14
2093 236	23-48-101
2093 237	23-48-101
2093 264	23-34-301
2093 340	8-57-10
2093 350	8-50-308
2093 380	23-40-185
2093 381	23-40-185
2093 382	23-40-177
2093 383	23-40-177
2093 386	23-40-190
2093 387	23-40-150
2093 388	23-40-150
2093 390	23-40-170

MyMopar.com

PART NUMBER	CODE
2093 391.	23-40-170
2093 394.	23-40-187
2093 399.	23-63-112
2093 412.	23-18-26
2093 446.	23-39-5
2093 447.	23-39-5
2093 456.	23-39-5
2093 457.	23-39-5
2093 486.	23-39-5
2093 487.	23-39-5
2093 530.	23-19-84
2093 546.	23-63-21
2093 547.	23-63-21
2093 580.	23-61-103
2093 581.	23-61-103
2093 619.	23-22-145
2093 630.	23-63-33
2093 631.	23-63-33
2093 638.	23-66-235
2093 646.	23-48-108
2093 647.	23-48-108
2093 652.	23-63-112
2093 702.	23-32-48
2093 703.	23-32-48
2093 721.	8-47-131
2093 772.	23-34-235
2093 773.	23-34-235
2093 776.	23-34-242
2093 777.	23-34-242
2093 809.	23-64-71
2093 828.	23-14-47
2093 829.	23-14-47
2093 836.	23-42-13
2093 837.	23-42-13
2093 925.	23-34-179
2093 942.	23-64-48
2093 943.	23-64-48
2093 945.	23-32-15
2093 950.	23-08-12
2093 980.	22-20-29
2093 981.	23-51-45
2094 029.	23-19-74
2094 107.	23-58-357
2094 112.	23-41-250
2094 119.	23-58-555
2094 130.	23-48-121
2094 131.	23-48-121
2094 134.	23-59-56
2094 154.	23-42-38
2094 155.	23-42-38
2094 156.	23-42-57
2094 157.	23-42-57
2094 244.	23-58-364
2094 276.	23-20-24
2094 322.	23-41-4
2094 323.	23-41-4
2094 334.	23-63-126
2094 335.	23-63-126
2094 354.	23-112-70
2094 394.	23-115-6
2094 449.	23-22-80
2094 462.	23-64-242
2094 463.	23-64-242
2094 464.	23-64-242
2094 465.	23-64-242
2094 466.	23-58-486
2094 467.	23-58-486
2094 472.	23-58-486
2094 473.	23-58-486
2094 484.	23-63-33
2094 485.	23-63-33
2094 518.	23-64-306
2094 519.	23-64-306
2094 520.	23-64-306
2094 521.	23-64-306
2094 522.	23-64-306
2094 523.	23-64-306
2094 524.	23-64-306
2094 525.	23-64-306
2094 559.	23-58-237
2094 592.	23-48-93
2094 600.	8-50-335
2094 601.	8-50-303
2094 618.	8-47-126
2094 624.	22-20-29
2094 628.	8-57-79
2094 631.	23-32-15
2094 641.	8-47-69
2094 647.	8-47-68
2094 648.	23-63-21
2094 649.	23-63-21
2094 697.	8-56-63
	8-57-7
2094 745.	23-58-3
2094 869.	23-40-148
2094 874.	23-40-187
2094 882.	23-70-6
2094 883.	23-70-6
2094 890.	4-25-21
	23-54-131
2094 921.	1-135-1
2094 926.	1-135-1
2094 960.	23-63-33
2094 961.	23-63-33
2094 984.	23-32-15
2094 985.	23-32-15
2094 988.	8-56-1
2094 989.	8-56-1
2094 992.	8-56-7
2094 993.	8-56-7
2094 994.	8-56-23
2095 004.	8-29-208
2095 012.	8-29-155
2095 013.	8-29-97
2095 037.	8-29-133
2095 038.	8-29-42
2095 052.	8-29-134
2095 059.	8-28-3
2095 076.	8-52-176
2095 085.	8-52-214
2095 094.	8-52-120
2095 105.	8-52-241
2095 112.	8-52-86
2095 116.	8-52-101
2095 117.	8-52-67
2095 118.	8-52-89
2095 122.	8-52-41
2095 130.	8-52-61
2095 133.	8-52-50
2095 134.	8-52-49
2095 150.	8-52-4
2095 155.	8-52-375
2095 242.	8-52-80
2095 274.	8-27-292
2095 277.	8-36-83
2095 339.	8-29-132
2095 347.	8-52-227
2095 350.	8-52-67
2095 374.	8-35-41
2095 410.	8-52-80
2095 427.	8-29-98
2095 430.	8-28-3
2095 508.	8-27-205
2095 608.	8-52-328
2095 609.	8-52-328
2095 630.	8-27-4
2095 648.	8-27-250
2095 662.	8-28-3
2095 741.	8-27-292
2095 742.	8-27-250
2095 766.	8-36-96
2095 768.	8-36-96
2095 823.	8-36-83
2095 832.	8-27-1
2095 836.	8-27-1
2095 873.	8-27-205
2095 875.	8-52-5
2095 922.	8-27-138
2095 925.	8-29-135
2095 945.	8-29-153
2095 974.	8-27-1
2095 976.	8-27-1
2095 979.	8-27-1
2095 981.	8-27-1
2095 983.	8-27-1
2095 987.	8-27-1
2096 022.	23-47-457
2096 024.	24-28-55
	24-28-93
2096 052.	1-88-120
2096 083.	24-24-150
2096 084.	24-24-150
2096 089.	23-41-170
2096 090.	23-41-170
2096 111.	24-28-366
2096 112.	24-28-366
2096 129.	23-18-116
2096 141.	8-57-79
2096 169.	23-18-104
	23-41-174
2096 176.	23-41-170
2096 177.	23-41-170
2096 180.	8-05-14
2096 181.	8-05-20
2096 182.	24-28-47
2096 253.	24-28-220
2096 259.	24-28-25
2096 317.	8-35-85
2096 373.	23-54-167
2096 374.	8-41-36
2096 376.	1-48-300
2096 396.	8-31-11
2096 398.	23-18-103
2096 399.	23-41-170
2096 410.	8-55-57
2096 499.	8-05-12
2096 526.	8-31-2
2096 599.	8-20-10
2096 623.	1-82-44
2096 648.	8-55-57
	8-56-34
2096 658.	23-47-446
2096 681.	24-28-33
2096 735.	8-50-82
2096 765.	23-41-170
2096 772.	1-48-268
2096 857.	1-13-9
	8-13-3
2096 872.	1-04-18
2096 887.	24-28-36
2096 894.	1-04-4
2096 899.	1-04-6
2096 905.	23-41-176
2096 908.	23-41-176
2096 911.	23-41-176
2096 932.	1-48-555
2096 940.	24-28-78
2096 976.	8-37-517
2096 988.	23-67-160
2096 989.	1-48-151
2097 003.	1-06-11
	8-37-88
	8-39-15
	8-40-16
	8-41-36
	8-50-156
2097 010.	24-28-76
2097 045.	23-54-167
2097 055.	1-82-44
	15-14-21
2097 097.	1-48-940
2097 100.	24-24-159
2097 101.	24-25-234
2097 102.	24-25-157
2097 103.	24-25-234
2097 105.	24-25-232
2097 106.	24-25-20
2097 152.	24-28-384
2097 161.	1-06-14
2097 278.	1-06-1
2097 279.	8-31-10
2097 303.	8-30-1
2097 316.	8-34-1
2097 317.	8-34-1
2097 319.	8-34-1
2097 373.	24-01-18
2097 376.	24-28-25
2097 471.	14-02-29
2097 503.	8-05-20
	8-53-317
2097 570.	1-87-335
2097 625.	23-54-167
2097 628.	8-35-59
2097 746.	1-48-125
2097 814.	8-30-1
2097 816.	8-30-1
	14-02-24
2097 819.	8-37-372
2097 826.	8-37-410
2097 942.	24-24-165
2097 970.	24-24-5
2098 058.	8-27-190
2098 173.	8-27-250
2098 175.	8-27-292
2098 177.	8-27-308
2098 184.	8-27-308
2098 189.	8-27-250
2098 190.	8-27-292
2098 192.	8-27-308
2098 197.	8-27-308
2098 203.	8-27-308
2098 208.	8-27-250
2098 209.	8-27-308
2098 231.	8-29-97
2098 232.	8-29-97
2098 244.	8-27-158
2098 265.	8-28-3
2098 275.	8-28-3
2098 278.	8-29-99
2098 279.	8-29-99
2098 287.	8-29-131
2098 288.	8-29-131
2098 298.	8-27-308
2098 300.	8-28-74
2098 334.	8-36-114
2098 360.	8-36-114
2098 478.	8-29-154
2098 495.	8-27-1
2098 511.	8-29-97
2098 512.	8-29-133
2098 516.	8-29-97
2098 519.	8-27-250
2098 533.	8-27-1
2098 572.	8-36-49
2098 577.	8-36-114
2098 646.	8-29-132
2098 660.	8-52-389
2098 725.	8-27-1
2098 765.	8-27-26
	8-27-71

MyMopar.com

PART NUMBER	CODE
2098 770	8-27-300
2098 850	8-28-3
2098 920	17-12-4
2099 002	15-03-3
2099 058	15-03-3
2099 331	7-16-11
2099 332	8-34-40
2099 333	8-34-40
2099 334	7-26-30
2099 335	7-26-30
2099 339	7-26-32
2099 341	7-33-1
2099 343	7-31-23
2099 347	7-35-3
2099 354	7-31-42
2099 355	7-31-42
2099 367	7-35-2
2099 384	15-19-2
2099 385	15-19-2
2099 400	15-19-8
2099 402	15-11-3
2099 407	15-11-38
2099 434	12-04-4
2099 435	12-04-4
2099 440	12-01-9
2099 441	12-01-9
2099 478	7-16-11
2099 492	8-34-40
2099 493	8-34-40
2099 503	7-35-2
2099 513	15-11-3
2099 536	12-04-4
2099 537	12-04-4
2099 555	7-08-13
2099 579	8-34-40
2099 582	7-33-1
2099 598	7-26-37
2099 599	7-26-37
2099 630	7-16-11
2099 631	7-16-11
2099 639	7-31-10
2099 657	7-16-11
2099 660	7-16-47
2099 672	7-16-11
2099 680	8-34-40
2099 681	8-34-40
2099 708	7-17-2
2099 726	7-16-47
2099 741	7-16-63
2099 756	12-01-105
2099 757	12-01-105
2099 758	7-35-2
2099 759	7-35-2
2099 775	7-35-2
2099 779	7-26-30
2099 781	7-33-4
2099 784	12-02-5
2099 798	8-34-362
2099 800	7-16-63
2099 801	15-11-7
2099 808	7-16-47
2099 809	7-16-47
2099 812	12-01-51
2099 813	12-01-51
2099 824	7-16-47
2099 842	7-16-14
2099 843	7-16-14
2099 844	7-16-14
2099 859	7-16-63
2099 863	7-08-2
2099 866	7-08-2
2099 878	7-11-3
2099 880	7-11-3
2099 889	7-11-3
2099 894	7-11-3
2099 896	7-11-3
2099 899	7-11-3
2099 901	7-11-3
2099 902	7-11-3
2099 903	7-11-3
2099 905	7-11-3
2099 907	7-11-3
2099 908	7-11-3
2099 916	7-11-3
2099 917	7-11-3
2099 926	15-03-11
2099 934	12-01-9
2099 935	12-01-9
2099 944	7-08-13
2099 945	7-08-13
2099 957	7-31-28
2099 962	7-08-9
2099 963	7-08-9
2099 974	8-34-40
2099 987	7-16-11
2099 988	8-34-40
2099 989	8-34-40
2120 012	19-54-121
2120 016	19-54-219
2120 017	19-54-126
2120 018	19-54-181
2120 019	19-54-181
2120 208	7-02-1
2120 236	9-64-5
2120 237	9-64-5
2120 238	9-64-5
2120 510	7-02-16
2120 514	9-42-1
2120 520	7-04-16
2120 525	14-11-33
2120 627	9-23-5
2120 694	9-43-5
2120 764	10-22-11
2120 799	14-11-20
2120 811	14-14-8
2120 814	14-11-9
2120 817	21-142-12
2120 866	10-26-12
2120 870	10-07-6
2120 878	14-11-3
2120 955	7-46-1
2120 968	14-11-9
2121 013	7-02-1
2121 014	7-02-1
2121 016	7-06-14
2121 196	9-45-2
2121 198	9-02-16
	9-48-9
2121 204	10-07-11
2121 223	9-48-14
2121 244	9-03-29
2121 245	8-36-136
2121 250	7-03-1
2121 380	9-39-5
2121 430	9-58-12
2121 455	9-62-1
2121 524	9-05-5
2121 530	10-09-1
2121 531	10-14-18
2121 535	10-09-5
2121 554	9-58-5
2121 569	10-03-4
2121 571	14-13-3
2121 573	9-23-10
	10-24-23
2121 578	9-39-5
2121 579	9-39-5
2121 581	9-39-6
2121 582	9-39-6
2121 583	9-39-6
2121 585	9-48-12
2121 600	19-54-246
2121 686	9-39-14
2121 694	14-14-4
2121 702	10-23-7
2121 718	9-02-12
2121 725	9-16-6
2121 726	9-16-6
2121 727	9-16-6
2121 864	6-09-1
2121 952	14-30-2
2121 953	14-30-2
2121 954	14-30-2
2121 955	14-39-45
2121 967	14-01-1
2121 971	7-02-1
2121 972	7-03-1
2122 032	19-01-8
2122 198	13-35-1
2122 208	22-05-14
2122 209	22-05-14
2122 254	6-14-1
2122 255	6-14-1
2122 262	6-14-4
2122 266	5-47-8
2122 275	9-71-18
2122 276	5-39-24
2122 278	9-71-16
2122 279	9-71-19
2122 359	17-12-12
2122 468	22-01-5
2122 578	9-69-4
2122 620	13-11-5
2122 621	13-11-5
2122 795	11-01-1
2122 796	11-02-4
2122 831	11-01-1
2122 833	11-01-1
2122 834	11-01-1
2122 835	11-01-1
2122 857	17-11-5
2123 212	5-57-2
2123 214	5-57-2
2123 217	5-58-1
2123 218	5-58-1
2123 249	21-30-329
2123 341	5-56-2
	14-90-1
2123 395	11-10-42
2123 396	11-10-42
2123 438	11-10-3
2123 440	11-10-3
2123 456	11-10-3
2123 462	11-05-1
2123 469	11-05-4
2123 470	11-01-1
2123 479	11-05-1
2123 481	11-05-1
2123 491	11-05-4
2123 492	11-05-4
2123 513	14-02-18
2123 515	14-02-18
2123 623	14-86-1
2123 642	14-86-1
2123 643	1-39-2
2123 656	23-34-259
2123 668	19-14-1
2123 670	19-14-1
2123 722	19-15-4
2123 730	19-14-1
2123 781	17-12-6
2123 785	17-12-12
2123 792	13-66-3
2123 796	13-64-4
2123 797	13-64-4
2123 798	13-64-4
2123 799	13-64-4
2123 800	13-64-3
2123 802	8-47-8
2123 804	13-64-4
2123 805	13-64-4
2123 806	13-64-97
2123 807	13-64-97
2123 808	13-64-3
2123 813	13-66-3
2123 814	13-66-3
2123 834	13-66-16
2123 835	13-66-16
2123 849	13-66-135
2123 856	13-66-16
2123 857	13-66-16
2123 860	13-66-3
2123 880	13-68-6
2123 881	13-68-6
2123 884	13-68-18
2123 885	13-66-147
2123 902	13-64-5
2123 920	13-68-6
2123 921	13-68-6
2123 922	13-64-3
2123 923	13-64-3
2123 924	8-50-332
2123 925	8-50-332
2123 926	13-64-27
2123 927	13-64-27
2123 928	13-64-4
2123 929	13-64-4
2123 930	13-64-97
2123 931	13-64-97
2123 938	13-66-24
2123 939	13-66-135
2123 940	13-66-135
2124 255	21-137-202
2124 256	21-139-117
2124 257	21-139-118
2124 258	21-133-47
2124 271	21-03-1
2124 279	16-20-1
2124 328	21-85-56
2124 342	21-136-5
2124 384	21-15-2
2124 386	21-15-2
2124 387	21-14-6
2124 392	21-14-5
2124 393	21-24-2
2124 396	21-09-29
2124 410	21-03-23
2124 411	21-03-23
2124 457	21-04-1
2124 462	21-39-3
2124 463	21-39-3
2124 465	21-29-3
2124 466	21-29-25
2124 467	21-14-1
2124 468	21-14-19
2124 472	21-14-19
2124 473	21-25-4
2124 474	21-24-19
2124 493	21-136-47
2124 494	21-42-11
2124 496	21-09-33
2124 497	21-09-33
2124 499	21-09-33
2124 502	21-25-2
2124 504	21-15-33
2124 505	21-15-33
2124 506	21-25-6
2124 508	21-19-15
2124 509	21-19-15
2124 510	21-19-15

MyMopar.com

PART NUMBER	CODE
2124 511	21-19-15
2124 516	21-09-5
2124 519	21-04-2
2124 523	21-42-11
2124 552	21-139-143
2124 554	21-16-3
2124 560	21-10-16
2124 561	21-10-4
2124 562	21-11-1
2124 579	21-136-20
2124 600	21-118-55
2124 607	21-04-11
2124 663	21-138-23
2124 683	21-09-2
2124 697	21-139-101
2124 705	9-46-130
	21-118-42
2124 733	21-139-67
2124 734	21-139-68
2124 735	21-139-71
2124 736	21-139-74
2124 737	21-139-76
2124 810	21-129-10
2124 813	21-129-13
2124 814	21-133-5
2124 815	21-133-7
2124 819	21-133-15
2124 820	21-133-17
2124 821	21-133-17
2124 822	21-133-20
2124 823	21-133-22
2124 824	21-133-43
2124 825	21-133-39
2124 826	21-133-38
2124 827	21-133-36
2124 831	21-129-5
2124 833	21-133-7
2124 835	21-133-17
2124 836	21-133-7
2124 837	21-133-39
2124 838	21-133-36
2124 840	21-05-1
2124 841	21-134-38
2124 843	21-136-65
2124 844	21-136-232
2124 846	21-118-54
2124 847	21-133-42
2124 848	21-136-15
2124 850	21-137-5
2124 851	21-137-8
2124 852	21-137-22
2124 853	21-137-11
2124 856	21-137-13
2124 857	21-136-49
2124 860	21-04-2
2124 865	21-119-3
2124 867	21-119-5
2124 872	21-133-25
2124 937	21-09-2
2124 945	21-09-29
2125 024	21-138-21
2125 057	21-03-6
2125 059	21-39-3
2125 067	21-136-20
2125 069	21-137-22
2125 090	9-46-4
2125 104	21-05-35
2125 109	21-137-205
2125 113	21-09-23
2125 114	21-09-23
2125 115	21-09-23
2125 116	21-09-23
2125 130	16-20-1
2125 145	21-04-1
2125 179	21-16-3
2125 187	21-133-17
2125 195	21-09-2
2125 198	21-133-15
2125 200	21-129-5
2125 201	21-129-5
2125 228	21-04-1
2125 237	21-03-1
2125 239	21-04-2
2126 890	19-19-19
2126 946	19-02-55
2126 956	19-19-35
2126 965	19-19-36
2126 966	19-19-5
2127 010	19-01-8
2127 012	19-02-4
2127 017	19-15-4
2127 049	19-19-5
2127 083	19-15-59
2127 099	19-02-4
2127 117	19-19-4
2127 146	19-15-58
2127 157	19-54-182
2127 159	19-54-183
2127 174	19-54-180
2127 184	19-54-246
2127 185	19-54-246
2127 189	19-54-121
2127 196	19-54-180
2127 211	19-58-7
2127 227	19-58-14
2127 255	19-58-7
2127 269	19-58-23
2127 280	19-58-22
2128 275	19-54-258
2128 279	9-03-5
2128 285	8-52-39
2128 323	19-54-115
2128 324	19-54-115
2128 325	19-54-123
2128 337	19-54-86
2128 338	19-54-86
2128 347	14-11-30
2128 351	6-09-1
2128 405	9-03-28
2128 407	9-03-29
2128 412	8-52-39
2128 417	14-07-15
2128 425	7-43-8
2128 474	14-11-4
2128 481	6-09-1
2128 545	7-06-1
2128 548	10-26-6
2128 567	10-02-15
2128 568	10-02-15
2128 571	9-64-5
2128 572	9-64-5
2128 589	9-03-4
2128 625	10-02-15
2128 626	10-02-15
2128 636	14-13-1
2128 661	14-29-3
2128 664	14-01-1
2128 773	9-64-13
2128 774	9-64-18
2128 776	14-06-10
2128 778	14-11-28
2128 805	14-29-2
2128 877	6-10-2
2128 879	14-29-3
2128 933	9-58-5
2128 935	9-64-22
2128 936	9-64-22
2128 938	6-10-2
2128 939	6-10-10
2128 943	9-64-22
2128 962	9-02-13
	9-48-38
2128 969	24-25-15
2128 970	24-25-15
2128 977	9-39-14
2128 992	9-45-1
2129 000	14-29-10
2129 010	9-42-1
2129 012	9-23-17
2129 013	7-44-3
2129 019	19-54-246
2129 023	10-26-8
2129 024	10-26-27
2129 060	8-28-15
2129 154	8-28-36
2129 156	8-28-36
2129 194	9-48-6
2129 203	9-15-1
2129 205	7-41-4
2129 206	7-41-4
2129 234	8-52-39
2129 264	14-01-3
2129 265	7-05-1
2129 277	7-03-1
2129 284	7-03-1
2129 351	3-03-35
	9-02-12
	9-48-9
2129 384	14-29-2
2129 561	14-39-45
2129 562	14-29-12
2129 569	14-11-9
2129 597	14-29-15
2129 611	14-11-18
2129 617	9-03-28
2129 666	7-04-5
2129 667	7-04-5
2129 684	19-54-132
2129 856	14-29-44
2129 885	6-10-2
2129 886	6-10-10
2129 887	6-09-11
2129 910	14-11-9
2129 916	19-54-115
2129 944	9-23-40
2131 485	23-108-12
2131 486	23-108-12
2131 487	23-108-12
2131 488	23-108-12
2131 489	23-108-16
2131 490	23-108-16
2131 491	23-108-16
2131 492	23-108-16
2131 493	23-108-4
2131 494	23-108-4
2131 495	23-108-4
2131 496	23-108-4
2131 497	23-108-5
2131 498	23-108-5
2131 499	23-108-5
2131 500	23-108-5
2131 501	23-109-3
2131 502	23-109-3
2131 503	23-109-3
2131 504	23-109-3
2131 505	23-109-4
2131 506	23-109-4
2131 507	23-109-4
2131 508	23-109-4
2131 509	23-109-35
2131 510	23-109-35
2131 511	23-109-35
2131 512	23-109-35
2131 513	23-109-36
2131 514	23-109-36
2131 515	23-109-36
2131 516	23-109-36
2131 529	23-108-4
2131 530	23-108-4
2131 531	23-108-4
2131 532	23-108-4
2131 533	23-108-4
2131 534	23-108-4
2131 535	23-108-4
2131 536	23-108-4
2131 537	23-108-4
2131 538	23-108-4
2131 539	23-108-4
2131 540	23-108-4
2131 541	23-109-35
2131 542	23-109-35
2131 543	23-109-35
2131 544	23-109-35
2131 550	23-108-12
2131 551	23-108-12
2131 552	23-108-12
2131 553	23-108-12
2131 554	23-108-12
2131 555	23-108-12
2131 556	23-108-12
2131 557	23-108-12
2131 558	23-108-16
2131 559	23-108-16
2131 560	23-108-16
2131 561	23-108-16
2131 562	23-108-16
2131 563	23-108-16
2131 564	23-108-16
2131 565	23-108-16
2131 566	23-108-4
2131 567	23-108-4
2131 568	23-108-4
2131 569	23-108-4
2131 570	23-108-5
2131 571	23-108-5
2131 572	23-108-5
2131 573	23-108-5
2131 578	23-109-3
2131 579	23-109-3
2131 580	23-109-3
2131 581	23-109-3
2131 582	23-109-4
2131 583	23-109-4
2131 584	23-109-4
2131 585	23-109-4
2131 586	23-109-35
2131 587	23-109-35
2131 588	23-109-35
2131 589	23-109-35
2131 590	23-109-36
2131 591	23-109-36
2131 592	23-109-36
2131 593	23-109-36
2131 606	23-108-4
2131 607	23-108-4
2131 608	23-108-4
2131 609	23-108-4
2131 610	23-108-4
2131 611	23-108-4
2131 612	23-108-4
2131 613	23-108-4
2131 614	23-108-4
2131 615	23-108-4
2131 616	23-108-4
2131 617	23-108-4
2131 618	23-109-35
2131 619	23-109-35
2131 620	23-109-35
2131 621	23-109-35
2131 724	23-108-15

MyMopar.com

PART NUMBER	CODE	PART NUMBER	CODE	PART NUMBER	CODE	PART NUMBER	CODE	PART NUMBER	CODE
2131 725.	23-108-15	2131 871.	23-108-16	2131 960.	23-109-4	2132 159.	23-109-4	2132 321.	21-76-3
2131 726.	23-108-15	2131 872.	23-108-16	2131 962.	23-109-35	2132 160.	23-109-4	2132 325.	23-108-4
2131 727.	23-108-16	2131 873.	23-108-16	2131 963.	23-109-35	2132 161.	23-109-35	2132 326.	23-108-4
2131 728.	23-108-16	2131 877.	23-108-4	2131 965.	23-109-36	2132 162.	23-109-35	2132 327.	23-108-4
2131 729.	23-108-16	2131 878.	23-108-4	2131 966.	23-109-36	2132 163.	23-109-35	2132 328.	23-108-4
2131 730.	23-76-53	2131 879.	23-108-4	2131 968.	23-109-3	2132 164.	23-109-36	2132 334.	23-101-3
2131 733.	23-108-4	2131 880.	23-108-5	2131 969.	23-109-3	2132 165.	23-109-36	2132 335.	23-101-3
2131 734.	23-108-4	2131 881.	23-108-5	2131 971.	23-109-4	2132 166.	23-109-36	2132 352.	23-76-66
2131 735.	23-108-4	2131 882.	23-108-5	2131 972.	23-109-4	2132 198.	23-86-3	2132 353.	23-76-66
2131 736.	23-108-5	2131 883.	23-109-3	2131 974.	23-109-35	2132 248.	23-101-3	2132 402.	23-112-153
2131 737.	23-108-5	2131 884.	23-109-3	2131 975.	23-109-35	2132 249.	23-101-3	2132 403.	23-112-153
2131 738.	23-108-5	2131 885.	23-109-3	2131 977.	23-109-36	2132 250.	23-101-3	2132 404.	23-76-86
2131 739.	23-109-3	2131 886.	23-109-4	2131 978.	23-109-36	2132 251.	23-101-3	2132 405.	23-76-86
2131 740.	23-109-3	2131 887.	23-109-4	2132 032.	23-76-40	2132 252.	23-101-3	2132 409.	23-108-15
2131 741.	23-109-3	2131 888.	23-109-4	2132 033.	23-76-40	2132 253.	23-101-3	2132 410.	23-108-15
2131 742.	23-109-4	2131 889.	23-109-35	2132 034.	23-76-40	2132 254.	23-101-3	2132 411.	23-108-15
2131 743.	23-109-4	2131 890.	23-109-35	2132 035.	23-76-45	2132 255.	23-101-3	2132 412.	23-108-16
2131 744.	23-109-4	2131 891.	23-109-35	2132 036.	23-76-45	2132 264.	23-108-15	2132 413.	23-108-16
2131 745.	23-109-35	2131 892.	23-109-36	2132 037.	23-76-45	2132 265.	23-108-15	2132 414.	23-108-16
2131 746.	23-109-35	2131 893.	23-109-36	2132 038.	23-76-53	2132 266.	23-108-15	2132 415.	23-108-32
2131 747.	23-109-35	2131 894.	23-109-36	2132 039.	23-76-53	2132 267.	23-108-15	2132 416.	23-108-32
2131 748.	23-109-36	2131 898.	23-108-4	2132 040.	23-76-53	2132 268.	23-108-16	2132 417.	23-108-32
2131 749.	23-109-36	2131 899.	23-108-4	2132 080.	23-112-153	2132 269.	23-108-16	2132 418.	23-108-32
2131 750.	23-109-36	2131 900.	23-108-4	2132 081.	23-112-153	2132 270.	23-108-16	2132 419.	23-108-32
2131 754.	23-108-4	2131 910.	23-108-15	2132 082.	23-112-153	2132 271.	23-108-16	2132 420.	23-108-32
2131 755.	23-108-4	2131 911.	23-108-15	2132 083.	23-112-153	2132 273.	23-76-40	2132 424.	23-108-4
2131 756.	23-108-4	2131 912.	23-108-15	2132 084.	23-112-153	2132 274.	23-108-4	2132 425.	23-108-4
2131 792.	23-108-15	2131 913.	23-108-15	2132 085.	23-112-153	2132 275.	23-108-4	2132 426.	23-108-4
2131 793.	23-108-15	2131 914.	23-108-15	2132 086.	23-112-153	2132 276.	23-108-4	2132 427.	23-108-4
2131 794.	23-108-15	2131 915.	23-108-15	2132 087.	23-112-153	2132 277.	23-108-4	2132 428.	23-108-4
2131 795.	23-108-15	2131 916.	23-108-16	2132 088.	23-112-153	2132 278.	23-108-5	2132 436.	23-108-4
2131 796.	23-108-15	2131 917.	23-108-16	2132 089.	23-112-153	2132 279.	23-108-5	2132 437.	23-108-4
2131 797.	23-108-15	2131 918.	23-108-16	2132 090.	23-112-153	2132 280.	23-108-5	2132 438.	23-108-4
2131 798.	23-108-16	2131 919.	23-108-16	2132 091.	23-112-153	2132 281.	23-108-5	2132 439.	23-108-5
2131 799.	23-108-16	2131 920.	23-108-16	2132 092.	23-112-153	2132 286.	23-109-3	2132 440.	23-108-5
2131 800.	23-108-16	2131 921.	23-108-16	2132 093.	23-112-153	2132 287.	23-109-3	2132 441.	23-108-5
2131 801.	23-108-16	2131 928.	23-108-4	2132 094.	23-112-153	2132 288.	23-109-3	2132 442.	23-109-3
2131 802.	23-108-16	2131 929.	23-108-4	2132 095.	23-112-153	2132 289.	23-109-3	2132 443.	23-109-3
2131 803.	23-108-16	2131 930.	23-108-4	2132 096.	23-112-153	2132 290.	23-109-4	2132 444.	23-109-3
2131 810.	23-108-4	2131 931.	23-108-5	2132 097.	23-112-153	2132 291.	23-109-4	2132 445.	23-109-4
2131 811.	23-108-4	2131 932.	23-108-5	2132 110.	23-76-66	2132 292.	23-109-4	2132 446.	23-109-4
2131 812.	23-108-4	2131 933.	23-108-5	2132 111.	23-76-66	2132 293.	23-109-4	2132 447.	23-109-4
2131 813.	23-108-5	2131 934.	23-109-3	2132 112.	23-76-66	2132 302.	23-101-3	2132 448.	23-109-35
2131 814.	23-108-5	2131 935.	23-109-3	2132 113.	23-76-66	2132 303.	23-101-3	2132 449.	23-109-35
2131 815.	23-108-5	2131 936.	23-109-3	2132 114.	23-76-66	2132 304.	23-101-3	2132 450.	23-109-35
2131 816.	23-109-3	2131 937.	23-109-4	2132 115.	23-76-66	2132 305.	23-101-3	2132 451.	23-109-36
2131 817.	23-109-3	2131 938.	23-109-4	2132 116.	23-76-86	2132 306.	23-101-3	2132 452.	23-109-36
2131 818.	23-109-3	2131 939.	23-109-4	2132 117.	23-76-86	2132 307.	23-101-3	2132 453.	23-109-36
2131 819.	23-109-4	2131 940.	23-109-35	2132 118.	23-76-86	2132 308.	23-101-3	2132 466.	23-101-3
2131 820.	23-109-4	2131 941.	23-109-35	2132 119.	23-76-86	2132 309.	23-101-3	2132 467.	23-101-3
2131 821.	23-109-4	2131 942.	23-109-35	2132 120.	23-76-86	2132 310.	23-76-45	2132 478.	23-109-5
2131 825.	23-109-36	2131 943.	23-109-36	2132 121.	23-76-86	2132 311.	23-109-35	2132 482.	23-76-18
2131 826.	23-109-36	2131 944.	23-109-36	2132 126.	23-109-3	2132 312.	23-109-35	2132 483.	23-76-18
2131 827.	23-109-36	2131 945.	23-109-36	2132 127.	23-109-4	2132 313.	23-109-35	2132 484.	23-76-18
2131 831.	23-108-4	2131 949.	23-108-4	2132 128.	23-76-40	2132 314.	23-109-35	2132 492.	23-76-34
2131 832.	23-108-4	2131 950.	23-108-4	2132 129.	23-76-45	2132 315.	23-109-36	2132 493.	23-76-34
2131 833.	23-108-4	2131 951.	23-108-4	2132 155.	23-109-3	2132 316.	23-109-36	2132 494.	23-76-34
2131 868.	23-108-15	2131 956.	23-109-3	2132 156.	23-109-3	2132 317.	23-109-36	2132 498.	23-112-153
2131 869.	23-108-15	2131 957.	23-109-3	2132 157.	23-109-3	2132 318.	23-109-36	2132 499.	23-112-153
2131 870.	23-108-15	2131 959.	23-109-4	2132 158.	23-109-4	2132 319.	23-76-53	2132 537.	23-112-153

MyMopar.com

PART NUMBER	CODE	PART NUMBER	CODE	PART NUMBER	CODE	PART NUMBER	CODE	PART NUMBER	CODE
2132 538.	23-112-153	2132 695.	23-71-1	2132 811.	23-108-4	2132 948.	23-109-4	2144 332.	23-108-4
2132 541.	23-96-8	2132 696.	23-71-1	2132 863.	23-96-3	2132 949.	23-109-35	2144 333.	23-108-4
2132 542.	23-96-8	2132 697.	23-76-106	2132 864.	23-96-3	2132 950.	23-109-35	2144 334.	23-108-4
2132 543.	23-96-8	2132 698.	23-76-107	2132 867.	23-108-12	2132 951.	23-109-35	2144 335.	23-108-4
2132 544.	23-96-8	2132 699.	23-76-107	2132 868.	23-108-12	2132 952.	23-109-36	2144 336.	23-108-5
2132 566.	23-79-77	2132 709.	23-76-106	2132 869.	23-108-16	2132 953.	23-109-36	2144 337.	23-108-5
	23-96-8	2132 714.	23-108-4	2132 870.	23-108-16	2132 954.	23-109-36	2144 338.	23-108-5
2132 567.	23-79-77	2132 716.	23-108-4	2132 871.	23-108-4	2144 259.	23-86-3	2144 339.	23-108-5
	23-96-8	2132 718.	23-108-4	2132 872.	23-108-4	2144 260.	23-86-3	2144 340.	23-109-3
2132 584.	23-109-5	2132 727.	23-108-5	2132 873.	23-108-5	2144 263.	23-86-3	2144 341.	23-109-3
2132 587.	23-108-15	2132 729.	23-108-5	2132 874.	23-108-5	2144 267.	23-86-3	2144 342.	23-109-3
2132 588.	23-108-16	2132 731.	23-108-5	2132 875.	23-109-3	2144 268.	23-86-3	2144 343.	23-109-3
2132 590.	23-108-4	2132 736.	23-109-3	2132 876.	23-109-3	2144 271.	23-86-3	2144 344.	23-109-4
2132 591.	23-108-5	2132 737.	23-109-3	2132 877.	23-109-4	2144 272.	23-86-3	2144 345.	23-109-4
2132 592.	23-109-3	2132 738.	23-109-4	2132 878.	23-109-4	2144 275.	23-101-3	2144 346.	23-109-4
2132 593.	23-109-4	2132 739.	23-109-4	2132 879.	23-109-35	2144 276.	23-101-3	2144 347.	23-109-4
2132 594.	23-109-35	2132 740.	23-109-4	2132 880.	23-109-35	2144 281.	23-108-12	2144 348.	23-109-35
2132 595.	23-109-36	2132 741.	23-109-35	2132 881.	23-109-36	2144 282.	23-108-12	2144 349.	23-109-35
2132 596.	23-109-3	2132 742.	23-109-35	2132 882.	23-109-36	2144 283.	23-108-12	2144 350.	23-109-35
2132 597.	23-109-4	2132 743.	23-109-36	2132 885.	23-108-4	2144 284.	23-108-12	2144 351.	23-109-35
2132 598.	23-109-35	2132 744.	23-109-36	2132 886.	23-108-4	2144 285.	23-108-16	2144 352.	23-109-36
2132 599.	23-109-36	2132 751.	23-109-3	2132 887.	23-109-35	2144 286.	23-108-16	2144 353.	23-109-36
2132 601.	23-108-4	2132 752.	23-109-4	2132 888.	23-109-35	2144 287.	23-108-16	2144 354.	23-109-36
2132 612.	23-96-3	2132 753.	23-76-40	2132 892.	23-108-4	2144 288.	23-108-16	2144 355.	23-109-36
2132 613.	23-96-3	2132 754.	23-76-45	2132 893.	23-108-4	2144 292.	23-108-5	2144 356.	23-108-4
2132 632.	23-86-3	2132 755.	23-76-53	2132 896.	23-108-4	2144 293.	23-108-5	2144 357.	23-108-4
2132 633.	23-86-3	2132 762.	23-101-3	2132 897.	23-108-4	2144 294.	23-108-5	2144 358.	23-108-4
2132 634.	23-86-3	2132 763.	23-101-3	2132 902.	23-108-12	2144 295.	23-108-5	2144 359.	23-108-4
2132 635.	23-86-3	2132 769.	23-108-12	2132 903.	23-108-12	2144 296.	23-109-3	2144 364.	23-86-3
2132 639.	23-108-15	2132 771.	23-108-4	2132 904.	23-108-12	2144 297.	23-109-3	2144 368.	23-108-4
2132 645.	23-86-3	2132 772.	23-108-5	2132 905.	23-108-12	2144 298.	23-109-3	2144 369.	23-108-4
2132 646.	23-86-3	2132 773.	23-109-3	2132 906.	23-108-16	2144 299.	23-109-3	2144 370.	23-108-4
2132 647.	23-86-3	2132 774.	23-109-4	2132 907.	23-108-16	2144 300.	23-109-4	2144 371.	23-108-4
2132 648.	23-86-3	2132 775.	23-109-35	2132 908.	23-108-16	2144 301.	23-109-4	2144 372.	23-109-35
2132 649.	23-86-3	2132 776.	23-109-36	2132 909.	23-108-16	2144 302.	23-109-4	2144 373.	23-109-35
2132 650.	23-108-16	2132 781.	23-108-12	2132 910.	23-108-4	2144 303.	23-109-4	2144 374.	23-109-35
2132 651.	23-108-32	2132 782.	23-108-12	2132 911.	23-108-4	2144 304.	23-109-35	2144 375.	23-109-35
2132 652.	23-108-32	2132 783.	23-108-12	2132 912.	23-108-5	2144 305.	23-109-35	2144 380.	23-108-4
2132 654.	23-108-4	2132 784.	23-108-12	2132 913.	23-108-5	2144 306.	23-109-35	2144 381.	23-108-4
2132 655.	23-108-4	2132 787.	23-109-35	2132 914.	23-109-3	2144 307.	23-109-35	2144 382.	23-108-4
2132 661.	23-86-3	2132 788.	23-108-4	2132 915.	23-109-3	2144 308.	23-109-36	2144 383.	23-108-4
2132 662.	23-86-3	2132 789.	23-108-4	2132 916.	23-109-4	2144 309.	23-109-36	2144 388.	23-108-4
2132 663.	23-86-3	2132 790.	23-108-4	2132 917.	23-109-4	2144 310.	23-109-36	2144 389.	23-108-4
2132 664.	23-86-3	2132 791.	23-108-4	2132 918.	23-109-35	2144 311.	23-109-36	2144 390.	23-108-4
2132 665.	23-86-3	2132 792.	23-109-3	2132 919.	23-109-35	2144 316.	23-108-12	2144 391.	23-108-4
2132 666.	23-109-3	2132 793.	23-109-3	2132 920.	23-109-36	2144 317.	23-108-12	2144 396.	23-108-4
2132 667.	23-109-3	2132 794.	23-109-3	2132 921.	23-109-36	2144 318.	23-108-12	2144 397.	23-108-4
2132 668.	23-109-4	2132 795.	23-109-3	2132 924.	23-108-4	2144 319.	23-108-12	2144 398.	23-108-4
2132 672.	23-109-36	2132 796.	23-109-35	2132 925.	23-108-4	2144 320.	23-108-12	2144 399.	23-108-4
2132 673.	23-109-36	2132 797.	23-109-35	2132 926.	23-109-35	2144 321.	23-108-12	2144 400.	23-109-35
2132 674.	23-108-5	2132 798.	23-109-35	2132 927.	23-109-35	2144 322.	23-108-12	2144 401.	23-109-35
2132 680.	23-86-3	2132 799.	23-109-35	2132 930.	23-108-4	2144 323.	23-108-12	2144 402.	23-109-35
2132 681.	23-86-3	2132 803.	23-109-3	2132 931.	23-108-4	2144 324.	23-108-16	2144 403.	23-109-35
2132 682.	23-86-3	2132 804.	23-109-4	2132 934.	23-108-4	2144 325.	23-108-16	2144 408.	23-108-4
2132 683.	23-86-3	2132 805.	23-109-35	2132 935.	23-108-4	2144 326.	23-108-16	2144 409.	23-108-4
2132 684.	23-86-3	2132 806.	23-109-35	2132 943.	23-109-3	2144 327.	23-108-16	2144 410.	23-108-4
2132 685.	23-101-3	2132 807.	23-109-35	2132 944.	23-109-3	2144 328.	23-108-16	2144 411.	23-108-4
2132 686.	23-101-3	2132 808.	23-109-35	2132 945.	23-109-3	2144 329.	23-108-16	2144 416.	23-108-4
2132 692.	23-71-1	2132 809.	23-108-4	2132 946.	23-109-4	2144 330.	23-108-16	2144 417.	23-108-4
2132 693.	23-71-1	2132 810.	23-108-4	2132 947.	23-109-4	2144 331.	23-108-16	2144 418.	23-108-4

MyMopar.com

PART NUMBER	CODE	PART NUMBER	CODE	PART NUMBER	CODE	PART NUMBER	CODE	PART NUMBER	CODE
2144 419.	23-108-4	2148 634.	23-109-35	2148 714.	23-76-86	2148 782.	23-108-15	2148 860.	23-108-13
2144 424.	23-108-12	2148 635.	23-109-4	2148 715.	23-76-86	2148 783.	23-108-15	2148 861.	23-108-13
2144 425.	23-108-12	2148 636.	23-109-4	2148 716.	23-76-86	2148 784.	23-108-15	2148 862.	23-108-13
2144 426.	23-108-12	2148 637.	23-109-4	2148 717.	23-76-86	2148 785.	23-108-15	2148 863.	23-108-13
2144 427.	23-108-12	2148 638.	23-109-4	2148 718.	23-76-86	2148 786.	23-108-15	2148 864.	23-108-13
2144 428.	23-108-16	2148 639.	23-109-3	2148 719.	23-76-86	2148 787.	23-108-15	2148 865.	23-108-13
2144 429.	23-108-16	2148 640.	23-109-3	2148 720.	23-76-86	2148 788.	23-108-15	2148 866.	23-108-13
2144 430.	23-108-16	2148 641.	23-109-3	2148 721.	23-76-86	2148 789.	23-108-15	2148 867.	23-108-13
2144 431.	23-108-16	2148 642.	23-109-3	2148 722.	23-76-66	2148 808.	23-108-5	2148 868.	23-108-16
2144 448.	23-108-12	2148 643.	23-76-45	2148 723.	23-76-66	2148 809.	23-108-5	2148 869.	23-108-16
2144 449.	23-108-12	2148 644.	23-76-45	2148 724.	23-76-66	2148 810.	23-108-5	2148 870.	23-108-16
2144 450.	23-108-12	2148 645.	23-76-45	2148 725.	23-76-66	2148 811.	23-108-5	2148 871.	23-108-16
2144 451.	23-108-12	2148 646.	23-76-45	2148 726.	23-76-66	2148 812.	23-108-5	2148 872.	23-108-16
2144 456.	23-108-12	2148 647.	23-76-40	2148 727.	23-76-66	2148 813.	23-108-5	2148 873.	23-108-16
2144 457.	23-108-12	2148 648.	23-76-40	2148 728.	23-76-66	2148 814.	23-108-4	2148 874.	23-108-16
2144 458.	23-108-12	2148 649.	23-76-40	2148 729.	23-76-66	2148 815.	23-108-4	2148 875.	23-108-16
2144 459.	23-108-12	2148 650.	23-76-40	2148 730.	23-109-4	2148 816.	23-108-4	2148 876.	23-108-16
2144 460.	23-108-12	2148 659.	23-76-53	2148 731.	23-109-4	2148 817.	23-108-4	2148 877.	23-108-16
2144 461.	23-108-12	2148 660.	23-76-53	2148 732.	23-109-4	2148 818.	23-108-4	2148 878.	23-108-16
2144 462.	23-108-12	2148 661.	23-76-53	2148 733.	23-109-4	2148 819.	23-108-4	2148 879.	23-108-16
2144 463.	23-108-12	2148 662.	23-76-53	2148 734.	23-109-3	2148 820.	23-108-5	2148 880.	23-108-16
2144 464.	23-108-16	2148 663.	23-76-53	2148 735.	23-109-3	2148 821.	23-108-5	2148 881.	23-108-16
2144 465.	23-108-16	2148 664.	23-76-53	2148 736.	23-109-3	2148 822.	23-108-5	2148 882.	23-108-16
2144 466.	23-108-16	2148 665.	23-76-53	2148 737.	23-109-3	2148 823.	23-108-5	2148 883.	23-108-16
2144 467.	23-108-16	2148 666.	23-108-5	2148 746.	23-108-5	2148 824.	23-108-4	2148 884.	23-108-16
2144 468.	23-108-16	2148 667.	23-108-5	2148 747.	23-108-5	2148 825.	23-108-4	2148 885.	23-108-16
2144 469.	23-108-16	2148 668.	23-108-5	2148 748.	23-108-5	2148 826.	23-108-4	2148 886.	23-108-16
2144 470.	23-108-16	2148 669.	23-108-5	2148 749.	23-108-5	2148 827.	23-108-4	2148 887.	23-108-16
2144 471.	23-108-16	2148 670.	23-108-4	2148 750.	23-108-4	2148 828.	23-108-32	2148 900.	23-108-15
2144 504.	23-108-12	2148 671.	23-108-4	2148 751.	23-108-4	2148 829.	23-108-32	2148 901.	23-108-15
2144 505.	23-108-12	2148 672.	23-108-4	2148 752.	23-108-4	2148 830.	23-108-32	2148 902.	23-108-15
2144 506.	23-108-12	2148 673.	23-108-4	2148 753.	23-108-4	2148 831.	23-108-32	2148 903.	23-108-15
2144 507.	23-108-12	2148 674.	23-108-4	2148 754.	23-108-4	2148 832.	23-108-32	2148 904.	23-108-15
2144 508.	23-108-16	2148 675.	23-108-4	2148 755.	23-108-4	2148 833.	23-108-32	2148 905.	23-108-15
2144 509.	23-108-16	2148 676.	23-108-4	2148 756.	23-108-4	2148 834.	23-108-32	2148 906.	23-108-15
2144 510.	23-108-16	2148 677.	23-108-4	2148 757.	23-108-4	2148 835.	23-108-32	2148 907.	23-108-15
2144 511.	23-108-16	2148 678.	23-108-32	2148 758.	23-108-32	2148 836.	23-108-32	2148 938.	23-76-86
2144 536.	23-108-12	2148 679.	23-108-32	2148 759.	23-108-32	2148 837.	23-108-32	2148 939.	23-76-86
2144 537.	23-108-12	2148 680.	23-108-32	2148 760.	23-108-32	2148 838.	23-108-32	2148 940.	23-76-86
2144 538.	23-108-12	2148 681.	23-108-32	2148 761.	23-108-32	2148 839.	23-108-32	2148 941.	23-76-86
2144 539.	23-108-12	2148 682.	23-108-13	2148 762.	23-108-32	2148 840.	23-108-32	2148 942.	23-76-86
2144 540.	23-108-12	2148 683.	23-108-13	2148 763.	23-108-32	2148 841.	23-108-32	2148 943.	23-76-86
2144 541.	23-108-12	2148 684.	23-108-13	2148 764.	23-108-32	2148 842.	23-108-32	2148 944.	23-76-86
2144 542.	23-108-12	2148 685.	23-108-13	2148 765.	23-108-32	2148 843.	23-108-32	2148 945.	23-76-86
2144 543.	23-108-12	2148 686.	23-108-16	2148 766.	23-108-13	2148 844.	23-108-32	2148 946.	23-76-86
2144 544.	23-108-16	2148 687.	23-108-16	2148 767.	23-108-13	2148 845.	23-108-32	2148 947.	23-76-86
2144 545.	23-108-16	2148 688.	23-108-16	2148 768.	23-108-13	2148 846.	23-108-32	2148 948.	23-76-86
2144 546.	23-108-16	2148 689.	23-108-16	2148 769.	23-108-13	2148 847.	23-108-32	2148 949.	23-76-86
2144 547.	23-108-16	2148 690.	23-108-15	2148 770.	23-108-13	2148 848.	23-108-13	2148 950.	23-76-66
2144 548.	23-108-16	2148 691.	23-108-15	2148 771.	23-108-13	2148 849.	23-108-13	2148 951.	23-76-66
2144 549.	23-108-16	2148 692.	23-108-15	2148 772.	23-108-13	2148 850.	23-108-13	2148 952.	23-76-66
2144 550.	23-108-16	2148 693.	23-108-15	2148 773.	23-108-13	2148 851.	23-108-13	2148 953.	23-76-66
2144 551.	23-108-16	2148 706.	23-109-36	2148 774.	23-108-16	2148 852.	23-108-13	2148 954.	23-76-66
2148 627.	23-109-36	2148 707.	23-109-36	2148 775.	23-108-16	2148 853.	23-108-13	2148 955.	23-76-66
2148 628.	23-109-36	2148 708.	23-109-36	2148 776.	23-108-16	2148 854.	23-108-13	2148 956.	23-76-66
2148 629.	23-109-36	2148 709.	23-109-36	2148 777.	23-108-16	2148 855.	23-108-13	2148 957.	23-76-66
2148 630.	23-109-36	2148 710.	23-109-35	2148 778.	23-108-16	2148 856.	23-108-13	2148 958.	23-76-66
2148 631.	23-109-35	2148 711.	23-109-35	2148 779.	23-108-16	2148 857.	23-108-13	2148 959.	23-76-66
2148 632.	23-109-35	2148 712.	23-109-35	2148 780.	23-108-16	2148 858.	23-108-13	2148 960.	23-76-66
2148 633.	23-109-35	2148 713.	23-109-35	2148 781.	23-108-16	2148 859.	23-108-13	2148 961.	23-76-66

MyMopar.com

PART NUMBER	CODE	PART NUMBER	CODE	PART NUMBER	CODE	PART NUMBER	CODE	PART NUMBER	CODE
2148 962.	23-76-86	2149 032.	23-109-4	2149 102.	23-109-3	2149 166.	23-108-32	2149 248.	23-109-4
2148 963.	23-76-86	2149 033.	23-109-4	2149 103.	23-109-3	2149 167.	23-108-32	2149 249.	23-109-4
2148 964.	23-76-86	2149 034.	23-109-4	2149 104.	23-109-5	2149 168.	23-108-32	2149 250.	23-109-3
2148 965.	23-76-86	2149 035.	23-109-4	2149 105.	23-109-5	2149 169.	23-108-32	2149 251.	23-109-3
2148 966.	23-76-86	2149 036.	23-109-3	2149 106.	23-109-5	2149 170.	23-108-13	2149 252.	23-109-3
2148 967.	23-76-86	2149 037.	23-109-3	2149 107.	23-109-5	2149 171.	23-108-13	2149 253.	23-109-3
2148 968.	23-76-86	2149 038.	23-109-3	2149 112.	23-108-5	2149 172.	23-108-13	2149 254.	23-109-3
2148 969.	23-76-86	2149 039.	23-109-3	2149 113.	23-108-5	2149 173.	23-108-13	2149 255.	23-109-3
2148 970.	23-76-66	2149 040.	23-109-3	2149 114.	23-108-5	2149 174.	23-108-13	2149 256.	23-109-3
2148 971.	23-76-66	2149 041.	23-109-3	2149 115.	23-108-5	2149 175.	23-108-13	2149 257.	23-109-3
2148 972.	23-76-66	2149 042.	23-109-3	2149 116.	23-108-5	2149 176.	23-108-13	2149 258.	23-109-3
2148 973.	23-76-66	2149 043.	23-109-3	2149 117.	23-108-5	2149 177.	23-108-13	2149 259.	23-109-3
2148 974.	23-76-66	2149 044.	23-109-3	2149 118.	23-108-5	2149 179.	23-108-13	2149 277.	23-76-45
2148 975.	23-76-66	2149 045.	23-109-3	2149 119.	23-108-5	2149 180.	23-108-16	2149 278.	23-76-45
2148 976.	23-76-66	2149 056.	23-76-86	2149 120.	23-108-5	2149 181.	23-108-16	2149 279.	23-76-45
2148 977.	23-76-66	2149 057.	23-76-86	2149 121.	23-108-5	2149 182.	23-108-16	2149 280.	23-76-45
2148 978.	23-109-36	2149 058.	23-76-86	2149 122.	23-108-4	2149 183.	23-108-16	2149 282.	23-76-40
2148 979.	23-109-36	2149 059.	23-76-86	2149 123.	23-108-4	2149 184.	23-108-16	2149 283.	23-76-40
2148 980.	23-109-36	2149 060.	23-76-86	2149 124.	23-108-4	2149 185.	23-108-16	2149 284.	23-76-40
2148 981.	23-109-36	2149 061.	23-76-86	2149 125.	23-108-4	2149 186.	23-108-16	2149 285.	23-76-40
2148 982.	23-109-36	2149 062.	23-76-86	2149 126.	23-108-4	2149 187.	23-108-16	2149 287.	23-109-4
2148 983.	23-109-36	2149 063.	23-76-86	2149 127.	23-108-4	2149 188.	23-108-16	2149 288.	23-109-4
2148 984.	23-109-35	2149 064.	23-76-66	2149 128.	23-108-4	2149 189.	23-108-16	2149 289.	23-109-4
2148 985.	23-109-35	2149 065.	23-76-66	2149 129.	23-108-4	2149 190.	23-108-15	2149 290.	23-109-4
2148 986.	23-109-35	2149 066.	23-76-66	2149 130.	23-108-4	2149 191.	23-108-15	2149 292.	23-109-3
2148 987.	23-109-35	2149 067.	23-76-66	2149 131.	23-108-4	2149 192.	23-108-15	2149 293.	23-109-3
2148 988.	23-109-35	2149 068.	23-76-66	2149 132.	23-76-19	2149 193.	23-108-15	2149 294.	23-109-3
2148 989.	23-109-35	2149 069.	23-76-66	2149 133.	23-76-19	2149 194.	23-108-15	2149 295.	23-109-3
2148 990.	23-109-36	2149 070.	23-76-66	2149 134.	23-76-19	2149 195.	23-108-15	2149 302.	23-109-36
2148 991.	23-109-36	2149 071.	23-76-66	2149 135.	23-76-19	2149 196.	23-108-15	2149 303.	23-109-36
2148 992.	23-109-36	2149 072.	23-112-153	2149 136.	23-76-19	2149 197.	23-108-15	2149 304.	23-109-36
2148 993.	23-109-36	2149 073.	23-112-153	2149 137.	23-76-19	2149 198.	23-108-15	2149 305.	23-109-36
2148 994.	23-109-35	2149 074.	23-112-153	2149 138.	23-76-19	2149 199.	23-108-15	2149 307.	23-109-35
2148 995.	23-109-35	2149 075.	23-112-153	2149 139.	23-76-19	2149 220.	23-109-36	2149 308.	23-109-35
2148 996.	23-109-35	2149 076.	23-112-153	2149 140.	23-76-34	2149 221.	23-109-36	2149 309.	23-109-35
2148 997.	23-109-35	2149 077.	23-112-153	2149 141.	23-76-34	2149 222.	23-109-36	2149 310.	23-109-35
2149 006.	23-76-45	2149 078.	23-112-153	2149 142.	23-76-34	2149 223.	23-109-36	2149 312.	23-108-5
2149 007.	23-76-45	2149 079.	23-112-153	2149 143.	23-76-34	2149 224.	23-109-36	2149 313.	23-108-5
2149 008.	23-76-45	2149 080.	23-112-153	2149 144.	23-76-34	2149 225.	23-109-36	2149 314.	23-108-5
2149 009.	23-76-45	2149 081.	23-112-153	2149 145.	23-76-34	2149 226.	23-109-36	2149 315.	23-108-5
2149 010.	23-76-45	2149 082.	23-112-153	2149 146.	23-76-34	2149 227.	23-109-36	2149 317.	23-108-4
2149 011.	23-76-45	2149 083.	23-112-153	2149 147.	23-76-34	2149 228.	23-109-36	2149 318.	23-108-4
2149 012.	23-76-45	2149 084.	23-112-153	2149 148.	23-76-34	2149 229.	23-109-36	2149 319.	23-108-4
2149 013.	23-76-45	2149 085.	23-112-153	2149 149.	23-76-34	2149 230.	23-109-35	2149 320.	23-108-4
2149 015.	23-76-45	2149 086.	23-112-153	2149 150.	23-76-18	2149 231.	23-109-35	2149 322.	23-76-19
2149 016.	23-76-40	2149 087.	23-112-153	2149 151.	23-76-18	2149 232.	23-109-35	2149 324.	23-76-34
2149 017.	23-76-40	2149 088.	23-109-36	2149 152.	23-76-18	2149 233.	23-109-35	2149 325.	23-76-34
2149 018.	23-76-40	2149 089.	23-109-36	2149 153.	23-76-18	2149 234.	23-109-35	2149 326.	23-76-34
2149 019.	23-76-40	2149 090.	23-109-36	2149 154.	23-76-18	2149 235.	23-109-35	2149 327.	23-76-34
2149 020.	23-76-40	2149 091.	23-109-36	2149 155.	23-76-18	2149 236.	23-109-35	2149 329.	23-76-18
2149 021.	23-76-40	2149 092.	23-109-35	2149 156.	23-76-18	2149 237.	23-109-35	2149 330.	23-76-18
2149 022.	23-76-40	2149 093.	23-109-35	2149 157.	23-76-18	2149 238.	23-109-35	2149 331.	23-76-18
2149 023.	23-76-40	2149 094.	23-109-35	2149 158.	23-76-18	2149 239.	23-109-35	2149 332.	23-76-18
2149 024.	23-76-40	2149 095.	23-109-35	2149 159.	23-76-18	2149 240.	23-109-4	2149 333.	23-108-32
2149 025.	23-76-40	2149 096.	23-109-4	2149 160.	23-108-32	2149 241.	23-109-4	2149 334.	23-108-32
2149 026.	23-109-4	2149 097.	23-109-4	2149 161.	23-108-32	2149 242.	23-109-4	2149 335.	23-108-32
2149 027.	23-109-4	2149 098.	23-109-4	2149 162.	23-108-32	2149 243.	23-109-4	2149 336.	23-108-32
2149 028.	23-109-4	2149 099.	23-109-4	2149 163.	23-108-32	2149 245.	23-109-4	2149 337.	23-108-13
2149 029.	23-109-4	2149 100.	23-109-3	2149 164.	23-108-32	2149 246.	23-109-4	2149 338.	23-108-13
2149 031.	23-109-4	2149 101.	23-109-3	2149 165.	23-108-32	2149 247.	23-109-3	2149 339.	23-108-13

MyMopar.com

PART NUMBER	CODE
2149 340.	23-108-13
2149 342.	23-108-16
2149 343.	23-108-16
2149 344.	23-108-16
2149 345.	23-108-16
2149 347.	23-108-15
2149 348.	23-108-15
2149 349.	23-108-15
2149 350.	23-108-15
2149 771.	23-86-15
2149 772.	23-86-15
2149 773.	23-86-15
2149 774.	23-79-64
2149 775.	23-79-64
2149 776.	23-79-64
2149 855.	23-86-3
2149 856.	23-86-3
2149 857.	23-86-3
2149 858.	23-86-3
2149 859.	23-86-3
2149 860.	23-86-3
2149 861.	23-86-3
2149 869.	23-86-3
2149 870.	23-86-3
2149 871.	23-86-3
2149 872.	23-86-3
2149 873.	23-86-3
2149 874.	23-86-3
2149 875.	23-86-3
2149 883.	23-86-3
2149 884.	23-86-3
2149 885.	23-86-3
2149 886.	23-86-3
2149 891.	23-86-15
2149 897.	23-108-15
2149 899.	23-76-18
2149 900.	23-108-4
2149 901.	23-108-16
2149 903.	23-76-34
2149 904.	23-108-5
2149 906.	23-109-3
2149 907.	23-76-40
2149 908.	23-109-35
2149 909.	23-109-4
2149 910.	23-76-45
2149 911.	23-109-36
2149 912.	23-86-3
2149 913.	23-86-3
2149 916.	23-86-15
2149 917.	23-86-15
2149 936.	23-109-3
2149 937.	23-109-3
2149 938.	23-109-4
2149 939.	23-109-4
2160 328.	23-112-19
2160 500.	23-45-30
2160 502.	23-45-29
2160 567.	23-112-18
2160 576.	23-76-57
2160 578.	23-76-57
2160 640.	23-76-57
2160 648.	23-115-4
2161 011.	23-26-89
2161 014.	23-26-87
2161 015.	23-26-87
2161 021.	23-38-5
2161 022.	23-38-5
2161 028.	23-02-105
2161 035.	23-02-107
2161 038.	23-38-14
2161 041.	23-38-9
2161 056.	23-34-27
2161 079.	23-21-3
2161 115.	23-102-105
2161 134.	23-33-220
2161 135.	23-33-26
2161 136.	23-33-213
2161 156.	23-33-217
2161 158.	23-33-213
2161 160.	19-14-35
2161 162.	23-33-42
2161 168.	8-36-4
2161 174.	23-33-96
2161 175.	23-33-96
2161 182.	23-06-28
2161 192.	8-35-111 23-17-2
2161 217.	23-06-15
2161 236.	23-108-98
2161 237.	23-108-98
2161 261.	23-47-451
2161 268.	23-06-4
2161 290.	15-14-20
2161 291.	23-47-55
2161 307.	8-05-8
2161 308.	8-05-6
2161 316.	8-05-32
2161 329.	23-21-45
2161 356.	23-17-24
2161 423.	23-17-49
2161 426.	23-21-15
2161 428.	23-21-32
2161 431.	23-21-66
2161 432.	23-21-74
2161 440.	23-33-109
2161 467.	23-21-45
2161 469.	23-06-15
2161 489.	23-33-135
2161 492.	23-33-220
2161 493.	23-33-135
2161 503.	8-35-111 23-17-2
2161 510.	1-67-5
2161 518.	23-33-220
2161 519.	23-33-220
2161 522.	23-33-240
2161 528.	23-33-135
2161 529.	23-33-109
2161 540.	23-06-53
2161 552.	23-33-109
2161 569.	23-06-17
2161 570.	23-33-135
2161 572.	23-38-21
2161 573.	8-37-178
2161 588.	23-103-10
2161 589.	23-103-10
2161 599.	23-17-49
2161 606.	23-33-227
2161 610.	23-26-58
2161 611.	23-26-58
2161 615.	23-17-72
2161 616.	23-33-42
2161 617.	19-31-14
2161 621.	23-06-21
2161 650.	8-37-178
2161 687.	23-103-48
2161 707.	23-33-227
2161 769.	23-33-86
2161 788.	23-21-48
2161 804.	23-33-109
2161 834.	23-33-86
2161 879.	23-92-25
2161 898.	23-22-145
2161 908.	23-33-135
2161 909.	23-33-135
2161 910.	23-33-86
2161 911.	23-33-86
2161 912.	5-27-9
2161 917.	23-33-109
2161 931.	23-21-18
2162 115.	23-21-65
2162 129.	23-33-42
2162 136.	23-20-14
2162 137.	23-20-14
2162 138.	23-20-14
2162 139.	23-20-14
2162 140.	23-20-14
2162 141.	23-20-14
2162 143.	23-33-86
2162 145.	23-33-12
2162 165.	23-21-32
2162 170.	23-21-50
2162 191.	19-14-35
2162 213.	23-26-41
2162 219.	23-86-10
2162 231.	23-33-109
2162 234.	23-33-129
2162 239.	1-48-383 24-28-113
2162 245.	1-48-362 24-28-92
2162 250.	23-96-7
2162 258.	23-96-22
2162 290.	23-31-124
2162 293.	23-31-119
2162 294.	23-33-217
2162 301.	23-06-53
2162 302.	23-06-53
2162 307.	23-47-6
2162 351.	23-17-28
2162 356.	23-33-135
2162 357.	23-33-135
2162 360.	1-48-357 24-28-101
2162 369.	23-33-12
2162 376.	23-26-47
2162 377.	23-26-47
2162 390.	23-47-431
2162 391.	23-47-432
2162 392.	23-47-432
2162 393.	23-47-432
2162 414.	1-76-1 23-21-8
2162 418.	1-48-365 24-28-90
2162 424.	23-33-86
2162 425.	23-33-86
2162 456.	23-33-12
2162 478.	23-108-98
2162 479.	23-108-98
2162 486.	23-21-8
2162 487.	23-21-8
2162 488.	23-33-213
2162 489.	23-33-213
2162 491.	19-31-7
2162 499.	23-54-63
2162 502.	8-05-28
2162 503.	8-35-111 23-17-2
2162 506.	23-22-78
2162 507.	23-22-78
2162 508.	23-99-9
2162 509.	23-99-9
2162 525.	1-48-356
2162 530.	19-31-14
2162 531.	8-35-111 23-17-2
2162 536.	23-17-49
2162 538.	23-33-10
2162 544.	23-31-124
2162 545.	23-31-119
2162 547.	23-22-81
2162 564.	1-48-362
2162 566.	23-02-1
2162 595.	23-17-5
2162 596.	23-02-1
2162 599.	8-37-178
2162 602.	8-37-178
2162 605.	23-17-10
2162 610.	23-17-9
2162 616.	23-103-10
2162 617.	23-103-10
2162 626.	23-103-3 23-103-10
2162 627.	23-103-10
2162 628.	23-103-48
2162 646.	23-33-135
2162 647.	23-33-135
2162 649.	23-33-20
2162 650.	23-33-109
2162 682.	23-06-4
2162 683.	23-06-10
2162 685.	23-02-19
2162 686.	23-103-10
2162 687.	23-103-10
2162 692.	23-06-15
2162 693.	23-06-13
2162 706.	19-31-1
2162 721.	23-02-18
2162 726.	22-26-23
2162 727.	22-26-23
2162 728.	22-26-23
2162 729.	22-26-23
2162 730.	22-26-23
2162 731.	23-26-80
2162 732.	22-26-23
2162 733.	22-26-23
2162 734.	22-26-23
2162 735.	22-26-23
2162 736.	22-26-23
2162 737.	22-26-23
2162 776.	23-33-101
2162 777.	23-33-102
2162 795.	5-27-9
2162 802.	23-33-103
2162 831.	23-96-3
2162 839.	23-31-33
2162 858.	19-14-35
2162 886.	23-06-21
2162 893.	23-86-24
2162 894.	23-86-24
2162 895.	23-86-24
2163 608.	23-20-11
2163 695.	23-113-2 23-113-25 23-113-30
2163 846.	23-113-84
2163 919.	23-20-41
2165 039.	23-103-37
2165 224.	23-18-13
2165 225.	23-18-13
2165 232.	23-18-13
2165 233.	23-18-13
2165 272.	23-96-9
2165 304.	23-63-33
2165 305.	23-63-33
2165 321.	23-34-120
2165 326.	23-11-1
2165 327.	23-11-1
2165 340.	23-39-6 23-42-58
2165 406.	23-34-20
2165 407.	23-34-20
2165 418.	23-66-65
2165 419.	23-66-65
2165 484.	23-63-33
2165 488.	23-63-33

MyMopar.com

PART NUMBER	CODE
2165 489.	23-63-33
2165 494.	23-22-145
2165 495.	23-22-145
2165 498.	23-22-145
2165 499.	23-22-145
2165 500.	23-22-145
2165 504.	23-22-145
2165 515.	23-64-314
2165 519.	23-64-74
2165 551.	15-03-5
2165 572.	23-19-84
2165 573.	23-19-84
2165 590.	23-19-92
2165 669.	23-58-85
2165 703.	23-64-47
2165 706.	23-112-70
2165 707.	23-112-70
2165 712.	23-09-52
2165 713.	23-09-52
2165 768.	23-41-7
2165 810.	23-32-22
2165 811.	23-32-24
2165 814.	23-34-235
2165 815.	23-34-235
2165 818.	23-34-235
2165 819.	23-34-235
2165 824.	23-34-235
2165 825.	23-34-235
2165 826.	23-34-27
2165 827.	23-34-27
2165 828.	23-34-27
2165 829.	23-34-27
2165 830.	23-34-27
2165 831.	23-34-27
2165 832.	23-34-27
2165 833.	23-34-27
2165 834.	23-34-301
2165 836.	23-34-301
2165 837.	23-82-30
2165 992.	23-09-17
2165 996.	23-64-47
2165 997.	23-64-47
2166 005.	23-34-167
2166 006.	23-51-5
2166 007.	23-51-5
2166 013.	13-66-106
2166 014.	13-66-106
2166 024.	23-20-24
2166 025.	23-20-24
2166 049.	23-58-227
2166 051.	23-32-17
2166 065.	23-32-48
2166 070.	23-51-5
2166 071.	23-51-5
2166 082.	23-32-27
2166 083.	23-32-27
2166 084.	23-32-27
2166 085.	23-32-27
2166 146.	23-51-6
2166 147.	23-51-6
2166 154.	23-51-41
2166 155.	23-51-41
2166 176.	23-34-235
2166 177.	23-34-235
2166 180.	23-34-235
2166 181.	23-34-235
2166 182.	23-34-234
2166 183.	23-34-234
2166 184.	23-34-234
2166 185.	23-34-234
2166 186.	23-34-234
2166 187.	23-34-234
2166 192.	23-34-27
2166 193.	23-34-27
2166 232.	23-58-480
2166 233.	23-58-480
2166 244.	23-19-82
2166 245.	23-19-82
2166 258.	23-34-27
2166 259.	23-34-27
2166 261.	23-34-166
2166 262.	23-34-166
2166 265.	23-34-179
2166 266.	23-34-179
2166 267.	23-86-10
2166 268.	23-86-10
2166 269.	23-86-10
2166 270.	23-34-302
2166 271.	23-34-302
2166 281.	23-64-66
2166 284.	23-64-66
2166 288.	23-64-314
2166 289.	23-64-314
2166 298.	23-40-85
2166 299.	23-40-85
2166 302.	23-40-85
2166 303.	23-40-85
2166 304.	23-40-85
2166 305.	23-40-85
2166 306.	23-40-85
2166 308.	23-40-85
2166 310.	23-40-85
2166 311.	23-40-85
2166 312.	23-40-96
2166 313.	23-40-96
2166 318.	23-59-56
2166 319.	23-59-56
2166 338.	23-58-220
2166 370.	23-15-1
2166 371.	23-15-1
2166 452.	23-15-3
2166 453.	23-15-3
2166 462.	23-15-14
2166 466.	23-15-3
2166 467.	23-15-3
2166 511.	23-39-17
2166 512.	23-63-14
2166 513.	23-63-14
2166 516.	23-63-15
2166 517.	23-63-15
2166 552.	23-63-14
2166 554.	23-63-15
2166 555.	23-63-15
2166 556.	23-63-14
2166 557.	23-63-14
2166 558.	23-63-15
2166 559.	23-63-15
2166 572.	23-63-21
2166 573.	23-63-21
2166 610.	23-58-333
2166 611.	23-58-333
2166 620.	23-19-63
2166 622.	23-18-29
2166 641.	12-02-5
2166 657.	23-61-116
2166 659.	23-112-88
2166 660.	23-112-88
2166 675.	23-66-235
2166 676.	8-05-23
2166 680.	23-64-242
2166 681.	23-64-242
2166 694.	23-18-5
2166 695.	23-18-5
2166 706.	23-34-242
2166 707.	23-34-242
2166 714.	23-64-265
2166 715.	23-64-265
2166 716.	23-64-265
2166 717.	23-64-265
2166 743.	8-05-8
2166 744.	23-34-242
2166 745.	23-34-242
2166 751.	23-14-24
2166 752.	23-14-27
2166 767.	23-64-308
2166 784.	23-34-242
2166 785.	23-34-242
2166 806.	23-64-299
2166 807.	23-64-299
2166 808.	23-64-299
2166 809.	23-64-299
2166 834.	23-42-23
2166 851.	23-39-2
2166 864.	23-39-5
2166 865.	23-39-5
2166 888.	23-64-308
2166 889.	23-64-308
2166 902.	23-64-306
2166 903.	23-64-306
2166 916.	23-09-52
2166 917.	23-09-52
2166 926.	23-41-270
2166 927.	23-41-270
2166 928.	23-59-56
2166 929.	23-59-56
2166 930.	23-59-56
2166 931.	23-59-56
2166 935.	23-32-70
2166 936.	23-09-51
2166 937.	23-09-51
2166 940.	23-34-22
2166 941.	23-34-22
2166 942.	23-34-22
2166 943.	23-34-22
2166 948.	23-59-35
2166 949.	23-59-35
2166 950.	23-40-100
2166 951.	23-40-100
2166 952.	23-40-100
2166 953.	23-40-100
2166 958.	23-58-569
2166 960.	23-58-569
2166 961.	23-58-569
2166 964.	23-63-94 23-63-104
2166 965.	23-63-94 23-63-104
2166 969.	23-15-13
2166 976.	23-59-35 23-59-56
2166 977.	23-59-35 23-59-56
2167 025.	23-22-145
2167 028.	23-22-145
2167 029.	23-22-145
2167 048.	23-66-235
2167 140.	23-09-9
2167 141.	23-09-9
2167 152.	23-64-311
2167 153.	23-64-311
2167 180.	23-34-229
2167 181.	23-34-229
2167 186.	23-39-34
2167 187.	23-39-34
2167 188.	23-39-34
2167 189.	23-39-34
2167 196.	23-42-38
2167 198.	23-63-33
2167 199.	23-63-33
2167 212.	23-26-41
2167 216.	23-63-55
2167 217.	23-63-55
2167 222.	23-26-41
2167 223.	23-26-41
2167 226.	23-63-55
2167 227.	23-63-55
2167 228.	23-86-19
2167 229.	23-86-19
2167 254.	23-19-82
2167 255.	23-19-82
2167 260.	23-19-105
2167 292.	23-63-20
2167 293.	23-63-20
2167 310.	23-64-242
2167 311.	23-64-242
2167 318.	23-39-19 23-39-48
2167 324.	23-08-12
2167 326.	23-64-71
2167 327.	23-64-71
2167 340.	23-63-127
2167 341.	23-63-127
2167 352.	23-18-13
2167 353.	23-18-13
2167 364.	23-64-242
2167 408.	23-14-10
2167 409.	23-14-10
2167 446.	23-18-5
2167 447.	23-18-5
2167 472.	23-64-240
2167 473.	23-64-240
2167 484.	23-39-5
2167 485.	23-39-5 23-63-33
2167 544.	23-18-5
2167 545.	23-18-5
2167 555.	23-18-20
2167 558.	23-18-26
2167 578.	23-39-5
2167 579.	23-39-5
2167 616.	23-18-26
2167 617.	23-18-26
2167 620.	23-42-16
2167 622.	23-42-16
2167 628.	23-64-242
2167 629.	23-64-242
2167 634.	23-14-41
2167 643.	23-18-21
2167 674.	23-63-14
2167 680.	23-63-126
2167 681.	23-63-126
2167 686.	23-63-15
2167 687.	23-63-15
2167 706.	23-63-14
2167 707.	23-63-14
2167 710.	23-63-15
2167 711.	23-63-15
2167 712.	23-63-15
2167 733.	23-66-135
2167 766.	23-64-308
2167 780.	23-09-52
2167 781.	23-09-52
2167 786.	23-59-56
2167 787.	23-59-56
2167 791.	23-19-74
2167 794.	23-19-177
2167 795.	23-19-177
2167 844.	23-64-265
2167 845.	23-64-265
2167 846.	23-64-265
2167 847.	23-64-265
2167 853.	23-64-269
2167 855.	23-64-289
2167 856.	23-64-272
2167 857.	23-64-272
2167 880.	23-64-273
2167 881.	23-64-273
2167 884.	23-64-265

MyMopar.com

PART NUMBER	CODE
2167 885	23-64-265
2167 886	23-64-265
2167 887	23-64-265
2167 916	23-14-53
2167 917	23-14-53
2167 918	23-36-5
2167 919	23-36-5
2167 933	23-19-8
2167 934	23-19-8
2167 935	23-19-8
2167 936	23-36-5
2167 937	23-36-5
2167 940	23-34-121
2167 941	23-34-121
2169 553	23-79-77 23-96-8
2169 554	23-79-77 23-96-8
2169 678	23-96-3
2169 716	23-102-3
2169 946	23-79-62
2169 947	23-70-19 23-109-5
2169 948	23-109-40
2169 949	23-109-5
2169 950	23-79-33
2169 951	23-79-33
2169 952	23-79-79
2169 953	23-79-33
2169 991	23-70-5
2169 992	23-70-5
2170 087	23-04-229
2171 253	23-47-8
2171 580	23-86-14
2171 884	23-114-10
2171 895	23-112-108
2172 100	23-112-112
2172 101	23-112-112
2172 104	23-112-45
2172 107	23-112-46
2172 126	23-84-3
2172 127	23-84-3
2172 299	23-84-3
2172 311	23-84-3
2172 323	23-84-3
2172 335	23-84-3
2172 347	23-84-3
2172 359	23-84-3
2172 758	23-103-3
2172 825	24-28-3
2172 826	24-28-3
2172 827	24-28-3
2172 828	24-28-3
2172 835	23-108-84
2172 848	23-108-66
2172 849	23-108-66
2173 023	23-79-33
2173 024	23-79-33
2173 047	23-102-3
2174 277	23-103-3
2174 644	23-33-42
2174 648	23-102-3
2174 672	23-84-3
2174 684	23-84-3
2174 883	23-84-3
2175 154	23-112-12
2175 367	23-96-8
2175 368	23-96-8
2175 369	23-96-8
2175 370	23-96-8
2175 373	23-96-3
2175 494	23-79-33
2175 539	23-78-2
2175 769	23-82-3
2176 097	23-79-33
2176 098	23-79-33
2176 348	23-20-41
2176 392	23-99-41
2176 432	23-109-5
2176 433	23-109-5
2176 434	23-109-40
2176 435	23-109-5
2176 436	23-79-62
2176 437	23-79-33
2176 438	23-79-79
2176 441	23-112-153
2176 472	23-108-99
2176 473	23-108-99
2176 502	23-96-3
2176 637	23-99-4
2176 638	23-99-4
2176 640	23-79-79
2176 669	23-79-33
2176 670	23-79-33
2176 673	23-79-33
2176 674	23-79-33
2176 704	23-103-3
2176 705	23-103-3
2176 707	23-103-3
2176 826	23-86-3
2176 828	23-86-3
2176 829	23-86-3
2176 830	23-86-3
2176 831	23-86-3
2176 998	23-79-77 23-96-8
2176 999	23-79-77 23-96-8
2177 000	23-79-77 23-96-8
2177 001	23-79-77 23-96-8
2177 004	23-79-77 23-96-8
2177 005	23-79-77 23-96-8
2177 015	23-79-3
2177 016	23-79-3
2177 017	23-79-3
2177 022	23-92-5
2177 023	23-92-5
2177 024	23-92-5
2177 025	23-92-5
2177 027	23-92-5
2177 028	23-92-5
2177 029	23-92-5
2177 030	23-92-5
2177 032	23-92-5
2177 033	23-92-5
2177 034	23-92-5
2177 035	23-92-5
2177 037	23-92-5
2177 038	23-92-5
2177 039	23-92-5
2177 040	23-92-5
2177 042	23-92-5
2177 043	23-92-5
2177 044	23-92-5
2177 045	23-92-5
2177 047	23-92-5
2177 048	23-92-5
2177 049	23-92-5
2177 050	23-92-5
2177 052	23-92-5
2177 053	23-92-5
2177 054	23-92-5
2177 055	23-92-5
2177 057	23-92-5
2177 058	23-92-5
2177 059	23-92-5
2177 060	23-92-5
2177 062	23-92-5
2177 063	23-92-5
2177 064	23-101-3
2177 065	23-101-3
2177 067	23-92-5
2177 068	23-92-5
2177 069	23-101-3
2177 070	23-101-3
2177 072	23-92-5
2177 073	23-92-5
2177 074	23-101-3
2177 075	23-101-3
2177 077	23-92-5
2177 078	23-92-5
2177 079	23-101-3
2177 080	23-101-3
2177 082	23-92-5
2177 083	23-92-5
2177 086	23-101-3
2177 087	23-101-3
2177 089	23-92-5
2177 090	23-92-5
2177 091	23-92-5
2177 092	23-92-5
2177 093	23-101-3
2177 094	23-101-3
2177 096	23-92-5
2177 097	23-92-5
2177 098	23-92-5
2177 099	23-92-5
2177 100	23-101-3
2177 101	23-101-3
2177 103	23-92-5
2177 104	23-92-5
2177 105	23-92-5
2177 106	23-92-5
2177 107	23-101-3
2177 108	23-101-3
2177 110	23-92-5
2177 112	23-101-3
2177 113	23-101-3
2177 115	23-92-5
2177 116	23-92-5
2177 117	23-101-3
2177 118	23-101-3
2177 120	23-92-5
2177 121	23-92-5
2177 122	23-101-3
2177 123	23-101-3
2177 125	23-92-5
2177 126	23-92-5
2177 127	23-101-3
2177 128	23-101-3
2177 130	23-92-5
2177 131	23-92-5
2177 132	23-101-3
2177 133	23-101-3
2177 137	23-101-3
2177 138	23-101-3
2177 140	23-92-5
2177 141	23-92-5
2177 142	23-101-3
2177 143	23-101-3
2177 145	23-92-5
2177 146	23-92-5
2177 147	23-101-3
2177 148	23-101-3
2177 150	23-92-5
2177 151	23-92-5
2177 152	23-101-3
2177 153	23-101-3
2177 155	23-92-5
2177 156	23-92-5
2177 157	23-101-3
2177 158	23-101-3
2177 160	23-92-5
2177 161	23-92-5
2177 162	23-101-3
2177 163	23-101-3
2177 165	23-92-5
2177 166	23-92-5
2177 168	23-92-5
2177 169	23-92-5
2177 171	23-92-5
2177 172	23-92-5
2177 173	23-101-3
2177 174	23-101-3
2177 175	24-28-3
2177 176	24-28-3
2177 178	23-101-3
2177 179	23-101-3
2177 181	23-101-3
2177 182	23-101-3
2177 184	23-101-3
2177 185	23-101-3
2177 187	23-101-3
2177 188	23-101-3
2177 189	24-28-3
2177 190	24-28-3
2177 192	23-92-5
2177 193	23-92-5
2177 194	23-92-5
2177 195	23-92-5
2177 196	23-101-3
2177 197	23-101-3
2177 199	23-92-5
2177 200	23-92-5
2177 201	23-92-5
2177 202	23-92-5
2177 203	23-101-3
2177 204	23-101-3
2177 206	23-92-5
2177 207	23-92-5
2177 208	23-92-5
2177 209	23-92-5
2177 210	23-101-3
2177 211	23-101-3
2177 213	23-92-5
2177 214	23-92-5
2177 215	23-92-5
2177 216	23-92-5
2177 217	23-101-3
2177 218	23-101-3
2177 220	23-92-5
2177 221	23-92-5
2177 222	23-92-5
2177 223	23-92-5
2177 224	23-101-3
2177 225	23-101-3
2177 227	23-92-5
2177 228	23-92-5
2177 229	23-92-5
2177 230	23-92-5
2177 231	23-101-3
2177 232	23-101-3
2177 234	23-92-5
2177 235	23-92-5
2177 236	23-92-5
2177 237	23-92-5
2177 238	23-101-3
2177 239	23-101-3
2177 241	23-92-5
2177 242	23-92-5
2177 243	23-92-5
2177 244	23-92-5
2177 245	23-101-3

MyMopar.com

PART NUMBER	CODE
2177 246. . .	23-101-3
2177 248. . .	23-92-5
2177 249. . .	23-92-5
2177 250. . .	23-92-5
2177 251. . .	23-92-5
2177 253. . .	23-92-5
2177 254. . .	23-92-5
2177 255. . .	23-92-5
2177 256. . .	23-92-5
2177 258. . .	23-92-5
2177 259. . .	23-92-5
2177 260. . .	23-92-5
2177 261. . .	23-92-5
2177 262. . .	23-101-3
2177 263. . .	23-101-3
2177 265. . .	23-92-5
2177 266. . .	23-92-5
2177 267. . .	23-92-5
2177 268. . .	23-92-5
2177 269. . .	23-101-3
2177 270. . .	23-101-3
2177 272. . .	23-92-5
2177 273. . .	23-92-5
2177 274. . .	23-92-5
2177 275. . .	23-92-5
2177 276. . .	23-101-3
2177 277. . .	23-101-3
2177 279. . .	23-92-5
2177 280. . .	23-92-5
2177 281. . .	23-92-5
2177 282. . .	23-92-5
2177 283. . .	23-101-3
2177 284. . .	23-101-3
2177 356. . .	23-103-3
2177 357. . .	23-103-3
2177 376. .	23-113-25
2177 377. .	23-113-25
2177 378. .	23-113-25
2177 379. .	23-113-25
2177 380. .	23-113-25
2177 486. . .	23-82-3
2177 487. . .	23-82-3
2177 488. . .	23-82-3
2177 489. . .	23-82-3
2177 490. . .	23-82-3
2177 491. . .	23-82-3
2177 492. . .	23-82-3
2177 493. .	23-108-32
2177 495. .	23-108-32
2177 496. .	23-108-32
2177 497. .	23-108-32
2177 498. .	23-108-32
2177 499. .	23-108-32
2177 500. .	23-108-32
2177 501. .	23-108-32
2177 502. .	23-108-32
2177 503. .	23-108-32
2177 504. .	23-108-32
2177 507. .	23-108-32
2177 508. .	23-108-32
2177 509. .	23-108-32
2177 510. .	23-108-32
2177 529. .	23-114-10
2177 530. .	23-112-45
2177 534. .	23-112-108
2177 543. .	23-112-153
2177 544. .	23-112-153
2177 545. .	23-112-12
2177 546. .	23-112-12
2177 547. .	23-112-12
2177 557. . .	23-92-5
2177 558. . .	23-92-5
2177 559. . .	23-92-5
2177 560. . .	23-92-5
2177 562. . .	23-101-3
2177 563. . .	23-101-3
2177 565. . .	23-92-5
2177 566. . .	23-92-5
2177 567. . .	23-101-3
2177 568. . .	23-101-3
2177 570. . .	23-101-3
2177 571. . .	23-101-3
2177 573. . .	23-92-5
2177 574. . .	23-92-5
2177 575. . .	23-92-5
2177 576. . .	23-92-5
2177 583. . .	23-92-5
2177 584. . .	23-92-5
2177 585. . .	23-92-5
2177 586. . .	23-92-5
2177 588. . .	23-92-5
2177 589. . .	23-92-5
2177 590. . .	23-92-5
2177 591. . .	23-92-5
2177 593. . .	23-92-5
2177 594. . .	23-92-5
2177 595. . .	23-101-3
2177 596. . .	23-101-3
2177 603. . .	23-92-5
2177 604. . .	23-92-5
2177 605. . .	23-101-3
2177 606. . .	23-101-3
2177 608. . .	23-92-5
2177 609. . .	23-92-5
2177 610. . .	23-101-3
2177 611. . .	23-101-3
2177 613. . .	23-101-3
2177 614. . .	23-101-3
2177 618. . .	23-101-3
2177 619. . .	23-101-3
2177 621. . .	23-101-3
2177 622. . .	23-101-3
2177 624. . .	23-84-3
2177 625. . .	23-84-3
2177 679. .	23-108-32
2177 680. .	23-108-32
2177 786. . .	23-79-3
2177 787. . .	23-79-3
2177 788. . .	23-79-3
2177 789. . .	23-79-3
2177 794. . .	23-79-3
2177 795. . .	23-79-3
2177 796. . .	23-79-3
2177 797. . .	23-79-3
2177 798. . .	23-79-3
2177 799. . .	23-79-3
2177 818. . .	23-76-3
	23-76-59
2177 819. . .	23-76-3
	23-76-59
2177 841. . .	23-79-33
2177 851. . .	23-79-33
2177 861. . .	23-79-33
2177 866. . .	23-79-33
2177 868. . .	23-79-33
2177 869. . .	23-79-33
2177 870. . .	23-79-33
2177 874. . .	23-79-33
2177 875. . .	23-79-33
2177 876. . .	23-79-33
2177 880. . .	23-79-33
2177 881. . .	23-79-33
2177 882. . .	23-79-33
2177 883. . .	23-79-33
2177 884. . .	23-79-33
2177 885. . .	23-79-33
2177 886. . .	23-79-33
2177 887. . .	23-79-33
2177 888. . .	23-79-33
2177 889. . .	23-79-33
2177 891. . .	23-79-33
2177 893. . .	23-79-33
2177 901. . .	23-96-8
2177 902. . .	23-96-8
2177 907. . .	23-96-8
2177 908. . .	23-96-8
2177 909. . .	23-99-41
2177 910. . .	23-99-41
2177 911. . .	23-99-41
2177 912. . .	23-99-41
2177 913. . .	23-99-41
2177 925. .	23-112-12
2177 926. .	23-112-12
2177 927. .	23-112-12
2177 939. . .	23-101-3
2177 940. . .	23-101-3
2177 941. . .	23-101-3
2177 942. . .	23-101-3
2177 943. . .	23-101-3
2177 944. . .	23-101-3
2177 945. . .	23-101-3
2177 946. . .	23-101-3
2177 992. . .	23-84-3
2177 993. . .	23-84-3
2177 994. . .	23-84-3
2177 995. . .	23-84-3
2177 996. . .	23-84-3
2177 997. . .	23-84-3
2177 998. . .	23-84-3
2177 999. . .	23-84-3
2178 000. . .	23-84-3
2178 001. . .	23-84-3
2178 007. . .	23-84-3
2178 008. . .	23-84-3
2178 009. . .	23-84-3
2178 010. . .	23-84-3
2178 011. . .	23-84-3
2178 017. . .	23-84-3
2178 018. . .	23-84-3
2178 019. . .	23-84-3
2178 020. . .	23-84-3
2178 021. . .	23-84-3
2178 027. . .	23-84-3
2178 028. . .	23-84-3
2178 029. . .	23-84-3
2178 030. . .	23-84-3
2178 031. . .	23-84-3
2178 037. . .	23-84-3
2178 038. . .	23-84-3
2178 039. . .	23-84-3
2178 040. . .	23-84-3
2178 041. . .	23-84-3
2178 047. . .	23-84-3
2178 048. . .	23-84-3
2178 049. . .	23-84-3
2178 050. . .	23-84-3
2178 051. . .	23-84-3
2178 057. . .	23-84-3
2178 058. . .	23-84-3
2178 059. . .	23-84-3
2178 060. . .	23-84-3
2178 061. . .	23-84-3
2178 078. . .	23-95-5
2178 079. . .	23-95-5
2178 080. . .	23-95-5
2178 081. . .	23-95-5
2178 083. . .	23-92-5
2178 084. . .	23-92-5
2178 085. . .	23-92-5
2178 086. . .	23-92-5
2178 088. . .	23-92-5
2178 089. . .	23-92-5
2178 090. . .	23-92-5
2178 091. . .	23-92-5
2178 093. . .	23-95-5
2178 094. . .	23-95-5
2178 095. . .	23-95-5
2178 096. . .	23-95-5
2178 098. . .	23-92-5
2178 099. . .	23-92-5
2178 100. . .	23-92-5
2178 101. . .	23-92-5
2178 103. . .	23-92-5
2178 104. . .	23-92-5
2178 105. . .	23-92-5
2178 106. . .	23-92-5
2178 108. . .	23-92-5
2178 109. . .	23-92-5
2178 110. . .	23-92-5
2178 111. . .	23-92-5
2178 173. . .	23-103-3
2178 174. . .	23-103-3
2178 175. . .	23-103-3
2178 176. . .	23-103-3
2178 177. . .	23-103-3
2178 178. . .	23-103-3
2178 179. . .	23-103-3
2178 184. . .	23-79-33
2178 185. . .	23-79-33
2178 187. . .	23-92-5
2178 188. . .	23-92-5
2178 190. . .	23-92-5
2178 191. . .	23-92-5
2178 193. . .	23-96-3
2178 194. . .	23-96-3
2178 197. . .	23-96-8
2178 198. . .	23-96-8
2178 199. . .	23-96-8
2178 200. . .	23-96-8
2178 201. . .	23-96-8
2178 202. . .	23-96-8
2178 205. . .	23-78-2
2178 207. . .	23-79-64
	23-96-10
2178 301. . .	23-103-3
2178 302. . .	23-103-3
2178 303. . .	23-103-3
2178 304. . .	23-103-3
2178 305. . .	23-103-3
2178 312. . .	23-76-3
2178 313. . .	23-76-3
2178 314. . .	23-76-3
	23-76-59
2178 315. . .	23-76-3
	23-76-59
2178 316. . .	23-76-3
2178 317. . .	23-76-3
2178 318. . .	23-76-3
2178 319. . .	23-76-3
2178 320. . .	23-76-3
	23-76-59
2178 321. . .	23-76-59
2178 322. . .	23-76-3
	23-76-59
2178 323. . .	23-76-3
	23-76-59
2178 324. . .	23-76-3
	23-76-59
2178 325. . .	23-76-3
	23-76-59
2178 328. . .	23-102-3
2178 332. . .	23-70-5
2178 333. . .	23-70-5
2178 354. . .	23-91-6
2178 355. . .	23-91-6
2178 360. . .	23-101-3
2178 361. . .	23-101-3
2178 366. . .	23-79-3
2178 367. . .	23-79-33
2178 382. . .	23-101-3

MyMopar.com

PART NUMBER	CODE
2178 383.	23-101-3
2178 388.	23-103-3
2178 389.	23-103-3
2178 393.	23-103-3
2178 395.	23-103-3
2178 398.	23-20-8
2178 399.	23-96-3
2178 404.	23-112-108
2178 405.	23-112-108
2178 408.	23-112-153
2178 409.	23-112-153
2178 410.	23-112-153
2178 411.	23-112-153
2178 420.	23-112-33
2178 421.	23-112-33
2178 446.	23-112-12
2178 447.	23-112-12
2178 448.	23-112-12
2178 449.	23-112-12
2178 600.	23-96-3
2178 601.	23-113-2
2178 602.	23-113-2
2178 603.	23-113-2
2178 604.	23-113-2
2178 607.	23-92-5
2178 608.	23-92-5
2178 609.	23-92-5
2178 610.	23-92-5
2178 611.	23-70-5
2178 612.	23-70-5
2178 613.	24-28-3
2178 614.	24-28-3
2178 615.	24-28-3
2178 616.	24-28-3
2178 617.	23-79-33
2178 619.	23-79-33
2178 620.	23-108-32
2178 634.	23-79-62
2178 635.	23-109-5
2178 636.	23-109-40
2178 637.	23-109-5
2178 638.	23-109-5
2178 639.	23-79-33
2178 642.	23-92-5
2178 643.	23-92-5
2178 644.	23-92-5
2178 645.	23-92-5
2178 648.	23-79-33
2178 649.	23-96-8
2178 650.	23-96-8
2178 653.	23-79-77 23-96-8
2178 654.	23-79-77 23-96-8
2178 715.	23-102-3
2178 726.	23-102-3
2178 780.	23-91-6
2178 781.	23-91-6
2178 782.	23-91-6
2178 783.	23-91-6
2178 784.	23-91-6
2178 785.	23-91-6
2178 787.	23-91-6
2178 792.	23-112-153
2178 794.	23-112-153
2178 795.	23-112-153
2178 796.	23-112-112
2178 797.	23-112-112
2178 802.	23-112-45
2178 803.	23-112-45
2178 813.	23-92-5
2178 814.	23-92-5
2178 815.	23-92-5
2178 818.	23-92-5
2178 819.	23-92-5
2178 820.	23-92-5
2178 821.	23-92-5
2178 825.	23-96-3
2178 831.	23-113-2 23-113-25
2178 837.	23-103-3
2178 838.	23-103-3
2178 839.	23-76-66
2178 840.	23-76-3 23-76-59
2178 841.	23-76-3 23-76-59
2178 842.	23-84-3
2178 844.	23-112-12
2178 884.	23-112-12
2178 885.	23-112-12
2178 886.	23-112-12
2178 887.	23-112-12
2179 401.	23-103-3
2179 576.	23-92-5
2179 577.	23-92-5
2179 578.	23-92-5
2179 579.	23-92-5
2179 580.	23-92-5
2179 581.	23-92-5
2179 582.	23-92-5
2179 583.	23-92-5
2179 584.	23-92-5
2179 585.	23-92-5
2179 586.	23-92-5
2179 587.	23-92-5
2179 588.	23-92-5
2179 589.	23-92-5
2179 590.	23-92-5
2179 591.	23-92-5
2179 592.	23-92-5
2179 593.	23-92-5
2179 594.	23-101-3
2179 595.	23-101-3
2179 596.	23-92-5
2179 597.	23-92-5
2179 598.	23-101-3
2179 599.	23-101-3
2179 910.	23-99-4
2179 911.	23-99-4
2180 050.	23-103-3
2180 051.	23-103-3
2180 134.	23-84-3
2180 135.	23-84-3
2180 188.	23-33-42
2180 189.	23-33-42
2180 666.	23-113-50
2180 667.	23-113-50
2180 840.	23-86-3
2180 950.	23-86-3
2181 175.	23-34-229
2185 001.	23-114-15
2185 074.	23-114-15
2185 112.	23-114-15
2185 116.	23-114-15
2185 119.	23-114-15
2185 120.	23-114-15
2185 124.	23-114-15
2185 141.	23-114-15
2185 142.	23-114-15
2185 143.	23-114-15
2185 144.	23-114-15
2185 145.	23-114-15
2185 146.	23-114-15
2185 147.	23-114-15
2185 148.	23-114-15
2185 149.	23-114-15
2185 150.	23-114-15
2185 151.	23-114-15
2185 152.	23-114-15
2185 153.	23-114-15
2185 154.	23-114-15
2185 155.	23-114-15
2185 156.	23-114-15
2185 157.	23-114-15
2185 158.	23-114-15
2185 159.	23-114-15
2185 160.	23-114-15
2185 163.	23-114-15
2185 164.	23-114-15
2185 165.	23-114-2 23-114-15
2185 166.	23-114-2 23-114-15
2185 167.	23-114-2 23-114-15
2185 168.	23-114-2
2185 177.	23-114-15
2185 178.	23-114-15
2185 187.	23-114-15
2185 188.	23-114-15
2185 189.	23-114-14
2185 190.	23-114-14
2185 192.	23-114-14
2185 193.	23-114-14
2185 194.	23-114-15
2185 195.	23-114-15
2185 196.	23-114-15
2185 197.	23-114-15
2185 198.	23-114-15
2185 201.	23-114-15
2185 203.	23-114-15
2185 206.	23-114-14
2185 207.	23-114-14
2185 237.	23-114-14
2185 254.	23-114-15
2185 259.	23-114-15
2185 260.	23-114-15
2185 261.	23-114-15
2185 270.	23-114-2
2185 271.	23-114-2
2185 272.	23-114-2
2185 273.	23-114-2
2185 274.	23-114-2
2185 275.	23-114-2
2185 276.	23-114-2
2185 277.	23-114-15
2185 278.	23-114-15
2185 279.	23-114-15
2185 280.	23-114-15
2185 281.	23-114-15
2185 282.	23-114-15
2185 297.	23-114-2
2185 298.	23-114-2
2185 299.	23-114-2
2185 300.	23-114-2
2185 301.	23-114-2
2185 302.	23-114-2
2185 303.	23-114-2
2185 304.	23-114-2
2185 305.	23-114-2
2185 307.	23-114-2
2185 308.	23-114-2
2185 309.	23-114-2
2185 310.	23-114-2
2185 311.	23-114-2
2185 312.	23-114-2
2185 313.	23-114-2
2185 314.	23-114-2
2185 315.	23-114-2
2185 316.	23-114-2
2185 317.	23-114-2
2185 318.	23-114-2
2185 319.	23-114-2
2185 320.	23-114-15
2185 321.	23-114-15
2185 322.	23-114-15
2185 323.	23-114-15
2185 329.	23-114-15
2185 331.	23-114-15
2185 336.	23-114-15
2185 340.	23-114-2
2185 349.	23-114-2
2185 350.	23-114-2
2185 351.	23-114-2
2185 352.	23-114-2
2185 354.	23-114-15
2185 355.	23-114-15
2185 356.	23-114-15
2185 360.	23-114-15
2185 361.	23-114-15
2185 369.	23-114-15
2185 371.	23-114-15
2185 372.	23-114-15
2185 373.	23-114-15
2185 374.	23-114-15
2185 376.	23-114-15
2185 377.	23-114-15
2185 385.	23-114-15
2185 398.	23-114-2
2185 400.	23-114-2
2185 401.	23-114-2
2185 402.	23-114-2
2185 403.	23-114-2
2185 404.	23-114-2
2185 405.	23-114-2
2185 406.	23-114-2
2185 407.	23-114-2
2185 408.	23-114-2
2185 409.	23-114-2
2185 410.	23-114-15
2185 452.	23-114-2
2185 453.	23-114-2
2185 454.	23-114-2
2185 455.	23-114-2
2185 474.	23-114-2
2185 475.	23-114-2
2185 476.	23-114-2
2185 477.	23-114-2
2185 478.	23-114-2
2185 479.	23-114-15
2185 481.	23-114-2
2185 518.	23-114-15
2185 522.	23-114-15
2185 523.	23-114-15
2185 526.	23-114-15
2185 544.	23-114-15
2185 545.	23-114-15
2185 547.	23-114-2
2185 548.	23-114-2
2185 549.	23-114-2
2185 553.	23-114-15
2185 554.	23-114-15
2185 555.	23-114-15
2185 566.	23-114-15
2185 567.	23-114-15
2185 578.	23-114-15
2185 579.	23-114-15
2185 587.	23-114-15
2185 588.	23-114-15
2185 589.	23-114-15
2185 590.	23-114-15
2185 592.	23-114-14
2185 598.	23-114-15
2185 599.	23-114-15
2185 600.	23-114-15
2185 601.	23-114-15

MyMopar.com

PART NUMBER	CODE
2185 602.	23-114-15
2185 603.	23-114-15
2185 604.	23-114-15
2185 610.	23-114-15
2185 611.	23-114-15
2185 612.	23-114-15
2185 646.	23-114-15
2185 841.	23-114-15
2185 842.	23-114-15
2185 886.	23-114-15
2186 050.	23-114-2
2186 063.	23-114-15
2186 064.	23-114-15
2186 065.	23-114-15
2186 066.	23-114-15
2186 067.	23-114-2
2186 068.	23-114-2
2186 079.	23-114-15
2186 099.	23-114-15
2186 100.	23-114-15
2186 101.	23-114-15
2186 102.	23-114-15
2186 103.	23-114-15
2186 104.	23-114-15
2186 165.	23-114-2
2186 166.	23-114-2
2186 167.	23-114-2
2186 168.	23-114-2
2188 048.	23-32-17
2188 050.	17-24-3
2188 051.	17-24-3
2188 277.	8-50-315
2188 279.	8-50-335
2188 280.	8-50-338
2188 416.	23-34-100
2188 417.	23-34-100
2188 432.	8-50-335
2188 433.	8-50-335
2188 434.	8-50-338
2188 436.	8-50-308
2188 438.	8-50-303
2188 439.	8-50-303
2188 466.	23-54-147
2188 467.	23-54-147
2188 470.	23-08-12
2188 474.	8-56-1
2188 475.	8-56-1
2188 476.	8-56-1
2188 477.	8-56-1
2188 478.	8-56-36
2188 479.	8-56-36
2188 480.	8-56-36
2188 481.	8-56-36
2188 483.	8-56-7
2188 485.	8-56-44
2188 504.	23-54-28
2188 554.	23-15-3
2188 555.	23-15-3
2188 616.	23-48-105
2188 619.	8-47-68
2188 628.	23-54-20
2188 687.	23-17-11
2188 688.	23-63-33
2188 689.	23-63-33
2188 712.	8-50-349
2188 713.	23-34-301
2188 734.	23-54-160
2188 735.	23-54-165
2188 745.	23-34-228
2188 767.	23-54-72
2188 769.	23-34-27
2188 802.	23-39-18
2188 803.	23-39-18
2188 824.	8-57-10
2188 836.	23-54-20
2188 852.	8-50-303
2188 853.	8-50-303
2188 856.	8-50-315
2188 857.	8-50-315
2188 864.	8-50-308
2188 902.	23-18-5
2188 903.	23-18-5
2188 934.	23-54-4
2188 935.	23-54-4
2188 990.	23-19-85
2189 004.	23-19-178
2189 054.	8-55-7
2189 063.	8-56-1
2189 067.	23-54-193
2189 074.	23-54-184
2189 093.	23-32-15
2189 098.	23-32-15
	23-34-40
2189 116.	23-54-1
2189 117.	23-54-1
2189 128.	23-34-122
2189 148.	23-36-131
2189 176.	8-55-7
2189 178.	8-55-158
	8-56-36
2189 179.	8-55-158
	8-56-36
2189 189.	8-55-158
2189 190.	8-55-380
	8-56-75
2189 191.	8-55-380
	8-56-75
2189 268.	23-32-22
2189 277.	23-34-110
2189 278.	23-34-235
2189 279.	23-34-235
2189 280.	23-34-235
2189 281.	23-34-235
2189 282.	23-34-235
2189 283.	23-34-235
2189 284.	23-34-235
2189 285.	23-34-235
2189 288.	23-34-235
2189 289.	23-34-235
2189 290.	23-32-69
	23-48-90
2189 298.	23-34-166
2189 299.	23-34-179
2189 300.	8-55-7
2189 302.	8-55-158
2189 309.	8-56-1
2189 314.	23-51-3
2189 315.	23-51-3
2189 346.	23-64-10
2189 347.	23-64-10
2189 350.	23-63-171
2189 351.	23-42-46
2189 353.	23-42-46
2189 354.	23-09-67
2189 355.	23-09-67
2189 369.	23-34-166
2189 370.	23-64-66
2189 371.	23-64-66
2189 372.	23-64-66
2189 373.	23-64-66
2189 374.	23-64-66
2189 382.	23-59-35
2189 384.	23-15-1
2189 385.	23-15-1
2189 395.	8-55-23
2189 408.	23-15-7
2189 410.	8-50-303
2189 411.	8-50-303
2189 420.	8-50-338
2189 432.	8-56-1
2189 433.	8-56-1
2189 434.	8-57-10
2189 435.	8-57-10
2189 452.	8-55-7
2189 453.	8-55-7
2189 454.	8-55-7
2189 455.	8-55-7
2189 460.	8-55-158
2189 461.	8-55-158
2189 462.	8-55-158
2189 463.	8-55-158
2189 464.	8-55-220
2189 466.	8-55-220
2189 472.	23-34-242
2189 473.	23-34-242
2189 474.	23-34-233
2189 475.	23-34-233
2189 476.	23-34-233
2189 477.	23-34-233
2189 478.	23-34-233
2189 479.	23-34-233
2189 486.	8-57-55
2189 487.	8-57-55
2189 488.	8-56-7
2189 489.	8-56-7
2189 490.	8-56-23
2189 492.	23-34-167
2189 493.	23-34-167
2189 498.	23-34-176
2189 499.	23-34-176
2189 500.	23-34-21
2189 501.	23-34-21
2189 502.	23-34-301
2189 503.	23-34-301
2189 504.	23-34-302
2189 505.	23-34-302
2189 517.	8-56-1
2189 521.	8-56-23
2189 529.	8-55-158
2189 530.	8-56-36
2189 548.	8-55-214
2189 550.	8-55-8
2189 560.	8-55-214
2189 562.	8-55-220
2189 635.	23-34-301
2189 636.	8-55-23
2189 646.	23-18-5
2189 647.	23-18-5
2189 664.	8-56-1
2189 665.	8-56-1
2189 678.	23-34-260
2189 679.	23-34-260
2189 685.	8-56-23
2189 690.	23-58-265
2189 693.	23-34-253
2189 694.	23-34-275
2189 695.	23-34-275
2189 711.	23-58-475
2189 716.	23-64-174
2189 717.	23-64-174
2189 718.	23-64-174
2189 719.	23-64-174
2189 732.	23-18-27
2189 735.	23-58-335
2189 736.	23-58-486
2189 737.	23-58-486
2189 742.	23-58-486
2189 743.	23-58-486
2189 744.	23-58-75
2189 745.	23-58-75
2189 746.	23-58-75
2189 748.	23-112-70
2189 754.	23-09-67
2189 755.	23-09-67
2189 756.	23-14-27
2189 757.	23-14-27
2189 758.	23-58-486
2189 759.	23-58-486
2189 761.	8-56-43
2189 767.	8-55-136
2189 798.	23-58-572
2189 799.	23-58-572
2189 800.	23-58-572
2189 801.	23-58-572
2189 802.	23-58-572
2189 803.	23-58-572
2189 832.	8-55-158
2189 833.	8-55-158
2189 834.	8-55-158
2189 846.	23-34-235
2189 848.	23-34-242
2189 849.	23-34-242
2189 852.	23-112-70
2189 853.	23-112-70
2189 860.	23-63-37
2189 875.	23-34-167
2189 900.	23-47-6
2189 901.	23-47-6
2189 909.	23-63-112
2189 918.	23-63-33
2189 919.	23-63-33
2189 936.	23-64-48
2189 937.	23-64-48
2189 947.	23-34-235
2189 952.	8-57-10
2189 964.	23-58-497
2189 965.	23-58-497
2189 985.	23-61-104
2192 685.	23-14-19
2192 739.	23-113-84
2193 035.	23-112-21
2193 096.	23-103-48
2195 048.	23-34-242
2195 049.	23-34-242
2195 050.	23-34-242
2195 051.	23-34-242
2195 052.	23-34-242
2195 053.	23-34-242
2195 054.	23-34-242
2195 055.	23-34-242
2195 076.	12-01-105
2195 077.	12-01-105
2195 098.	7-26-37
2195 252.	23-36-53
2195 253.	23-36-53
2195 254.	23-36-66
2195 260.	23-64-255
2195 267.	23-63-15
2195 268.	23-63-14
2195 272.	23-63-21
2195 273.	23-63-20
2195 274.	23-22-53
2195 275.	23-22-53
2195 304.	23-64-311
2195 305.	23-64-311
2195 306.	23-64-280
2195 307.	23-64-280
2195 308.	23-63-100
2195 309.	23-63-100
2195 346.	23-39-34
2195 347.	23-39-34
2195 380.	23-34-235
2195 381.	23-34-235
2195 392.	23-34-218
2195 393.	23-34-218
2195 398.	23-22-7

MyMopar.com

PART NUMBER	CODE
2195 399	23-22-7
2195 401	23-63-21
2195 406	23-26-41
2195 407	23-26-41
2195 410	23-63-55
2195 411	23-63-55
2195 440	23-63-21
2195 441	23-63-21
2195 497	15-13-2
2195 498	15-11-3
2195 520	15-11-58
2195 521	15-03-3
2195 558	8-34-40
2195 559	8-34-40
2195 562	23-36-66
2195 563	23-36-66
2195 586	23-51-6
2195 587	23-51-6
2195 611	7-35-2
2195 618	23-09-33
2195 619	23-09-33
2195 638	23-20-14
2195 639	23-20-14
2195 676	23-34-234
2195 677	23-34-234
2195 682	23-64-265
2195 683	23-64-265
2195 684	23-64-265
2195 685	23-64-265
2195 689	23-63-127
2195 694	23-64-49
2195 695	23-64-49
2195 700	23-63-126
2195 701	23-63-126
2195 726	23-09-75
2195 727	23-09-75
2195 740	23-09-35
2195 741	23-09-35
2195 744	23-64-287
2195 745	23-64-287
2195 754	23-22-53
2195 755	23-22-53
2195 758	23-22-53
2195 759	23-22-53
2195 764	23-63-106
2195 765	23-08-63
2195 766	23-08-60
2195 767	23-08-60
2195 768	23-39-48
2195 769	23-39-48
2195 775	23-22-55
2195 785	23-18-20
2195 786	23-26-60
2195 787	23-08-75
2195 794	23-59-56
2195 795	23-59-56
2195 796	23-59-56
2195 797	23-59-56
2195 800	23-22-53
2195 801	23-22-53
2195 806	23-63-15
2195 807	23-63-15
2195 810	23-14-47
2195 811	23-14-47
2195 822	23-39-5
2195 823	23-39-5
2195 828	23-18-13
2195 829	23-18-13
2195 864	23-64-273
2195 865	23-64-273
2195 883	23-22-55
	23-26-44
	23-26-45
2195 886	23-40-85
2195 887	23-40-85
2195 899	23-63-22
2195 949	7-26-15
2195 951	1-48-365
2195 956	23-40-92
2195 957	23-40-92
2195 968	23-63-100
2195 969	23-63-100
2195 998	23-64-242
2195 999	23-64-242
2196 010	17-16-1
2196 011	17-11-1
2196 045	9-01-5
2196 046	9-39-1
2196 062	21-01-3
2196 082	19-54-2
2196 086	9-39-1
2196 087	9-01-5
2196 144	1-08-1
2196 207	14-30-8
2196 209	14-30-7
2196 211	14-30-7
2196 212	14-30-7
2196 214	14-41-3
2196 221	14-30-7
2196 222	14-30-7
2196 246	14-30-4
2196 250	1-74-01
2196 300	1-06-2
2196 306	24-25-246
2196 312	8-33-164
2196 313	23-54-167
2196 314	8-37-17
2196 315	24-25-162
2196 322	8-50-135
2196 333	23-67-25
2196 335	8-36-1
2196 336	24-24-23
2196 341	24-28-36
2196 343	23-41-106
2196 449	1-01-1
2196 479	23-34-85
2196 480	23-34-85
2196 483	23-58-240
2196 620	23-54-73
2196 642	1-135-1
2196 669	23-63-55
2196 670	23-63-55
2196 671	23-63-55
2196 672	23-63-55
2196 750	2-14-8
2196 751	2-14-8
2196 752	2-14-8
2196 753	2-14-8
2196 754	2-14-8
2196 755	2-14-8
2196 784	17-12-4
2196 785	17-12-4
2196 787	17-12-4
2196 788	17-12-4
2196 789	17-11-3
2196 790	17-11-3
2196 791	17-11-3
2196 792	17-11-3
2196 793	17-11-3
2196 795	21-118-6
2196 839	23-36-123
2196 904	5-39-1
2196 905	5-39-1
2196 910	7-42-1
2196 934	7-14-5
2196 995	19-01-3
2196 998	21-138-2
2197 001	1-48-886
	24-24-167
2197 011	1-48-555
2197 052	8-37-162
2197 059	8-37-275
2197 060	8-37-136
2197 079	8-33-121
2197 147	1-88-205
2197 156	14-02-30
2197 170	8-50-126
2197 222	8-37-316
2197 223	8-37-1
2197 225	8-37-275
2197 271	8-37-458
2197 287	1-21-1
2197 327	8-34-178
2197 370	24-28-78
2197 371	24-28-78
2197 375	8-50-129
2197 376	8-50-82
2197 379	23-67-194
2197 383	8-05-16
	8-53-296
2197 389	1-48-192
	23-58-535
2197 405	1-50-1
	23-41-170
2197 407	24-24-5
2197 410	1-48-300
2197 415	23-58-532
2197 423	1-82-25
2197 443	1-48-300
2197 446	1-88-6
2197 447	1-88-6
2197 448	1-88-107
2197 449	8-37-21
2197 461	1-48-940
2197 466	24-24-159
2197 468	1-48-12
	24-24-164
2197 469	1-48-12
2197 470	1-48-12
2197 471	1-48-12
	24-24-164
2197 472	1-48-12
2197 473	24-24-164
2197 474	24-24-164
2197 475	24-24-164
2197 498	24-28-382
2197 499	1-48-192
2197 500	23-54-170
2197 501	23-58-535
2197 508	23-58-552
2197 509	1-48-313
	24-24-13
2197 511	23-33-44
2197 599	8-37-20
2197 600	8-37-20
2197 622	1-48-942
2197 623	24-24-156
2197 650	1-82-44
2197 663	24-24-140
2197 664	1-48-70
2197 678	1-48-254
	24-28-392
	24-29-14
2197 768	1-48-379
2197 832	1-48-10
	24-24-167
2197 836	1-48-942
2197 839	24-24-159
2197 844	24-24-156
2197 846	1-48-12
	24-24-164
2197 847	1-48-12
2197 848	1-48-12
2197 849	1-48-12
	24-24-164
2197 850	1-48-12
	24-24-164
2197 851	24-24-164
2197 852	24-24-164
2197 853	24-24-164
2197 870	1-88-170
2197 871	8-32-15
2197 876	8-32-15
2197 885	24-28-387
2197 896	24-01-33
2197 902	1-48-555
2197 904	1-48-770
2197 907	1-48-46
2197 939	21-30-28
2198 024	24-28-366
2198 082	24-24-27
2198 090	8-42-25
2198 099	23-67-79
2198 192	8-20-10
2198 210	1-82-9
2198 211	1-82-6
2198 213	23-54-178
2198 223	8-50-349
2198 323	1-82-14
2198 348	23-67-79
2198 361	14-02-8
2198 363	23-67-79
2198 407	23-67-85
2198 448	1-82-4
2198 450	1-82-21
2198 454	1-82-22
2198 638	8-37-15
2198 639	8-37-15
2198 640	8-37-15
2198 641	8-37-15
2198 652	8-37-16
2198 694	8-37-372
2198 695	8-37-372
2198 696	8-37-372
2198 727	1-108-2
2198 805	1-48-194
2198 860	8-55-63
2198 863	8-50-170
2198 869	8-35-44
2198 871	8-15-53
2198 872	8-35-85
2198 879	1-88-205
2199 255	23-36-66
2200 028	6-24-1
2200 029	6-24-1
2200 050	6-14-10
2200 051	6-13-1
2200 069	6-13-1
2200 118	5-03-5
2200 122	5-03-5
2200 214	16-20-1
2200 301	6-19-2
2200 341	5-44-9
2200 349	6-22-19
2200 490	23-33-213
2200 527	16-02-2
2200 534	16-02-1
2200 554	19-01-12
	19-02-13
2200 556	19-01-12
	19-02-13
2200 557	8-33-5
2200 560	19-58-14
2200 577	19-30-18
2200 585	8-33-4
2200 586	23-84-31
2200 587	23-84-31
2200 642	4-25-3
2200 706	8-33-4

MyMopar.com

PART NUMBER	CODE
2200 716	8-33-6
2200 717	8-33-6
2200 719	19-02-4
2200 730	19-15-47
2200 748	19-15-4
2200 749	19-15-4
2200 801	13-11-5
2200 860	21-30-336
2200 862	21-30-336
2200 864	21-30-336
2200 866	21-30-336
2200 868	21-30-336
2200 883	21-30-336
2200 884	21-30-336
2200 885	21-30-336
2200 886	21-30-336
2200 887	21-30-336
2200 928	22-01-5
2200 996	5-62-1
2201 009	13-72-2
2201 010	13-72-2
2201 039	13-72-1
2201 080	14-02-18
2201 082	14-02-18
2201 181	5-47-4
2201 197	5-28-8
2201 212	6-14-1
2201 217	6-13-4
2201 218	6-13-4
2201 232	19-14-1
2201 234	19-14-68
2201 237	19-04-1
2201 306	19-30-4
2201 316	19-30-4
2201 317	19-30-4
2201 403	11-10-42
2201 406	11-10-3
2201 411	11-09-3
2201 418	11-01-1
2201 432	11-05-1
2201 436	11-09-3
2201 437	11-09-3
2201 470	4-25-4
2201 498	5-69-1
2201 499	5-64-1
2201 525	13-35-1
2201 526	12-04-4
2201 536	13-33-61
2201 554	17-23-52
2201 602	23-84-30
2201 620	19-01-12
2201 621	19-01-12
2201 622	19-01-8
2201 624	19-14-42
2201 634	5-03-5
2201 666	5-64-1
2201 667	5-64-1
2201 668	5-64-1
2201 669	5-64-1
2201 764	19-58-7
2201 889	3-35-14
2201 915	5-100-2
2201 985	9-71-18
2201 990	9-71-5
2201 991	9-71-16
2202 380	7-04-10
2202 428	14-11-9
	14-11-18
2202 435	10-26-65
2202 499	9-20-1
2202 546	9-39-16
2202 547	9-39-15
2202 550	9-43-1
2202 551	9-43-10
2202 556	9-43-10
2202 557	9-43-14
2202 558	9-43-1
2202 583	14-01-23
	14-14-42
2202 666	7-06-14
2202 767	8-28-15
2202 769	7-03-1
2202 794	7-06-1
2202 812	9-03-28
2202 834	9-64-17
2202 845	10-22-16
2202 846	19-54-115
2202 850	19-54-123
2202 851	19-54-86
2202 866	9-02-5
2202 876	7-03-1
2202 921	10-03-4
2202 940	8-28-36
2202 942	8-28-15
2203 031	24-25-35
2203 035	24-25-45
2203 085	10-02-15
2203 091	9-48-6
2203 097	9-02-5
2203 106	9-23-5
2203 116	10-02-66
2203 117	10-02-67
2203 118	10-02-65
2203 130	14-30-1
2203 131	14-30-1
2203 132	14-30-1
2203 133	14-30-1
2203 134	14-30-1
2203 138	14-30-1
2203 142	14-30-1
2203 144	8-35-41
2203 195	7-04-10
2203 237	14-11-1
2203 239	14-14-1
2203 240	14-14-12
2203 350	22-06-1
2203 351	22-06-2
2203 352	22-06-1
2203 353	22-06-2
2203 386	13-72-3
2203 387	13-72-3
2203 388	13-72-3
2203 449	14-88-21
2203 456	14-86-40
2203 475	21-30-420
2203 480	21-30-2
2203 483	21-30-315
2203 488	21-30-418
2203 493	21-30-418
2203 494	21-30-418
2203 495	21-30-436
2203 498	21-30-316
2203 557	11-05-1
2203 563	11-05-4
2203 566	11-05-1
2203 568	11-05-1
2203 577	11-09-3
2203 579	11-09-3
2203 583	11-09-3
2203 584	11-09-3
2203 588	11-09-3
2203 589	11-09-3
2203 611	11-05-1
2203 638	11-08-5
2203 677	11-10-3
2203 704	13-64-3
2203 705	13-64-3
2203 715	13-68-6
2203 723	13-66-3
2203 750	13-64-3
2203 751	13-64-3
2203 752	13-68-6
2203 753	13-68-6
2203 754	13-68-18
2203 755	13-68-18
2203 756	8-47-93
2203 760	13-66-3
2203 761	13-66-3
2203 801	13-68-18
2203 802	13-68-6
2203 803	13-68-6
2203 815	13-66-3
2203 897	9-71-17
2203 905	11-10-20
2203 909	11-10-3
2203 915	11-10-3
2203 916	11-10-3
2203 924	11-10-42
2203 965	11-10-3
2203 966	11-10-3
2203 968	11-10-17
2204 000	13-66-3
2204 001	13-66-3
2204 008	13-66-16
2204 009	13-66-16
2204 010	13-66-16
2204 011	13-66-16
2204 020	13-66-147
2204 030	13-64-3
2204 034	13-66-3
2204 036	13-66-16
2204 037	13-66-16
2204 039	13-66-135
2204 072	13-72-3
2204 073	13-72-3
2204 074	13-72-3
2204 104	8-33-4
2204 107	8-33-6
2204 108	8-33-6
2204 151	23-32-17
2204 167	23-32-17
2204 170	23-32-115
2204 171	23-32-115
2204 184	2-08-63
	23-32-108
2204 185	2-08-63
	23-32-108
2204 199	23-32-17
2204 244	2-08-70
2204 274	19-48-12
2204 315	13-01-1
2204 355	21-85-5
2204 356	21-85-5
2204 357	21-85-5
2204 358	21-85-5
2204 359	21-85-5
2204 360	21-85-5
2204 369	21-133-65
2204 395	21-04-1
2204 397	21-42-23
2204 398	21-42-23
2204 403	9-46-4
2204 491	21-09-29
2204 503	21-14-15
2204 547	21-139-108
2204 576	21-139-140
2204 621	21-133-65
2204 622	21-133-65
2204 623	21-133-65
2204 641	21-119-15
2204 643	21-119-19
2204 645	21-133-15
2204 665	21-16-3
2204 666	21-14-5
2204 676	21-04-1
2204 702	21-03-28
2204 707	21-03-28
2204 709	21-118-45
2204 712	21-118-40
2204 716	21-119-15
2204 727	21-136-237
2204 728	21-03-7
2204 768	9-46-8
2204 788	21-119-15
2204 792	21-136-5
2204 799	21-119-19
2204 820	21-136-44
2204 823	21-136-41
2204 841	21-02-1
2204 870	21-02-1
2204 876	21-02-1
2204 881	21-02-1
2204 883	21-02-1
2204 885	21-139-191
2204 890	21-139-193
2204 893	21-139-147
2204 903	21-42-23
2204 904	21-42-23
2204 907	21-42-23
2204 916	21-02-1
2204 917	21-02-1
2204 929	21-119-15
2204 932	21-42-23
2204 942	21-84-7
2204 944	21-09-2
2204 952	21-136-20
2204 953	21-118-47
2204 976	21-133-7
2204 978	21-11-9
2204 979	21-133-5
2204 980	21-133-7
2204 993	21-118-57
2205 034	21-139-135
2205 041	21-118-47
2205 053	21-139-140
2205 058	21-14-1
2205 059	21-14-19
2205 061	21-14-15
2205 075	21-03-1
2205 077	21-03-1
2205 080	21-05-12
	21-22-2
2205 131	21-34-47
2205 132	21-15-2
2205 134	21-10-16
2205 182	21-139-147
2205 190	21-02-1
2205 192	21-14-20
2205 203	21-133-36
2205 223	21-133-48
2205 233	21-133-20
2205 237	9-46-40
2205 240	21-129-23
2205 241	21-133-10
2205 242	21-129-6
2205 299	21-119-5
2205 300	21-139-47
2205 302	21-129-23
2205 303	21-133-10
2205 314	21-119-3
2205 322	21-04-2
2205 325	21-133-7
2205 326	21-133-5
2205 518	7-06-1
2205 519	19-54-115
2205 521	19-54-115
2205 522	19-54-123
2205 523	19-54-86
2205 552	9-31-4
2205 582	14-30-2

MyMopar.com

PART NUMBER	CODE
2205 621	10-02-15
2205 622	10-02-15
2205 758	14-30-1
2205 760	14-30-1
2205 761	14-30-1
2205 765	14-30-1
2205 766	14-30-1
2205 768	14-30-1
2205 820	14-11-20
2205 836	9-03-28
2205 857	14-68-8
2205 858	14-30-2
	14-68-3
2205 859	9-13-5
2205 902	9-48-7
2205 905	9-48-6
2205 934	14-24-6
2205 957	10-02-62
2206 006	8-36-124
2206 022	24-25-35
2206 056	9-03-4
2206 095	10-07-7
2206 103	9-39-5
2206 104	9-39-5
2206 105	9-39-5
2206 106	9-39-5
2206 120	9-50-3
2206 132	9-01-24
2206 134	9-01-24
2206 136	9-01-24
2206 138	9-01-24
2206 146	14-68-5
2206 191	19-54-115
2206 192	19-54-115
2206 193	19-54-86
2206 220	14-30-1
2206 221	14-30-1
2206 222	14-30-1
2206 226	14-30-1
2206 227	14-30-1
2206 228	14-30-1
2206 229	14-30-1
2206 230	14-30-1
2206 261	10-23-7
2206 300	7-04-6
2206 315	9-10-5
2206 316	9-10-5
2206 317	10-23-7
2206 319	10-03-4
2206 346	8-28-36
2206 347	8-28-36
2206 348	8-28-15
2206 356	7-02-1
2206 373	10-24-4
2206 376	14-29-6
2206 381	10-23-7
2206 388	24-28-5
2206 397	21-142-12
2206 407	10-02-15
2206 416	9-48-14
2206 445	8-28-36
2206 446	8-28-15
2206 447	8-28-15
2206 448	8-28-292
2206 449	8-28-292
2206 450	8-28-14
2206 455	10-24-4
2206 458	10-23-7
2206 463	10-24-4
2206 465	9-15-1
2206 468	14-30-1
2206 475	9-64-5
2206 632	13-54-4
2206 633	1-07-1
2206 637	17-19-3
2206 883	17-19-10
2206 884	17-19-3
2206 923	17-23-52
2206 925	17-23-53
2206 938	17-19-3
2206 939	17-19-3
2206 940	17-19-3
2206 965	9-71-15
2206 974	16-02-1
2206 979	9-71-5
2206 994	16-02-1
2207 200	2-08-11
2207 484	3-35-14
2207 604	5-13-9
2207 606	5-13-9
2207 626	22-01-42
2207 697	6-50-1
2207 701	5-27-6
2207 709	5-31-18
2207 710	5-31-18
2207 738	6-35-1
2207 752	6-38-1
2207 757	6-38-1
2207 759	5-31-11
2207 843	19-15-20
2207 880	19-30-4
2207 883	8-33-6
2207 887	8-33-6
2207 888	8-33-5
2207 918	5-62-1
2207 933	5-56-2
2207 937	5-58-1
2207 988	4-25-4
2208 008	4-26-28
	5-27-12
2208 009	4-25-3
2208 017	4-25-4
2208 022	4-25-7
2208 043	4-25-7
2208 050	22-08-5
2208 080	19-27-31
2208 140	21-30-6
2208 153	19-48-1
2208 154	19-48-1
2208 155	19-48-16
2208 156	19-48-46
2208 158	19-48-49
2208 159	19-48-50
2208 160	21-42-23
2208 163	19-48-45
2208 166	19-48-45
2208 171	19-48-1
2208 172	19-48-51
2208 175	19-48-1
2208 182	21-30-336
2208 183	21-30-336
2208 184	21-30-336
2208 185	21-30-336
2208 186	21-30-336
2208 187	23-33-227
2208 188	21-30-416
2208 189	21-30-316
2208 268	6-16-1
2208 272	6-13-4
2208 273	6-13-1
2208 274	6-14-1
2208 370	11-01-1
2208 388	11-10-3
2208 390	11-10-3
2208 391	11-10-3
2208 393	11-10-3
2208 394	11-10-3
2208 396	11-10-3
2208 405	11-01-1
2208 406	11-01-1
2208 420	11-05-1
2208 428	11-05-1
2208 432	11-05-1
2208 434	11-05-1
2208 440	11-05-1
2208 467	14-86-50
2208 480	14-86-40
2208 563	13-33-61
2208 601	13-68-6
2208 602	13-68-6
2208 603	13-68-6
2208 608	13-64-4
2208 609	13-64-4
2208 610	13-64-4
2208 611	13-64-4
2208 612	13-64-4
2208 613	13-64-4
2208 614	13-66-16
2208 615	13-66-16
2208 616	13-66-135
2208 619	13-64-149
2208 620	8-47-8
2208 621	13-64-3
2208 852	5-58-1
2208 853	5-58-1
2208 892	5-57-2
2208 893	5-62-20
2209 214	8-37-387
2209 216	8-37-2
2209 229	21-84-4
2209 296	14-72-1
2209 323	1-48-7
2209 329	8-05-14
	8-53-270
2209 339	1-82-6
2211 129	23-20-29
2211 837	23-79-33
2212 272	1-32-2
	23-103-3
2212 685	1-32-2
2212 691	23-76-3
	23-76-59
	23-76-66
2216 100	23-09-58
2216 101	23-09-58
2216 111	23-09-47
2216 142	23-64-280
2216 143	23-64-280
2216 152	23-39-18
2216 153	23-39-18
2216 158	23-22-145
2216 159	23-22-145
2216 160	23-22-145
2216 161	23-22-145
2216 166	23-34-179
2216 172	23-39-44
2216 173	23-39-2
2216 208	23-64-246
2216 210	23-64-62
2216 211	23-64-62
2216 220	23-64-243
2216 221	23-64-243
2216 240	23-63-127
2216 241	23-63-127
2216 266	23-09-58
2216 267	23-09-58
2216 276	23-18-29
2216 279	23-14-153
2216 286	23-11-19
2216 287	23-11-19
2216 289	23-14-147
2216 296	23-64-12
2216 315	23-63-112
2216 322	23-34-280
2216 323	23-34-280
2216 344	23-64-240
2216 345	23-64-240
2216 358	23-42-59
2216 371	23-64-297
2216 372	23-63-15
2216 373	23-63-15
2216 374	23-63-15
2216 375	23-63-15
2216 380	23-64-174
2216 381	23-64-174
2216 382	23-64-174
2216 383	23-64-174
2216 384	23-09-9
2216 385	23-09-9
2216 390	23-42-56
2216 391	23-42-56
2216 394	23-42-56
2216 395	23-42-56
2216 404	23-42-23
2216 406	23-42-16
2216 415	23-42-59
2216 418	23-63-172
2216 419	23-63-172
2216 421	23-112-70
2216 427	23-18-26
2216 443	23-15-6
2216 448	23-26-18
2216 449	23-26-18
2216 450	23-15-3
2216 451	23-15-3
2216 458	23-15-1
2216 459	23-15-1
2216 461	23-86-16
2216 485	23-09-47
2216 504	23-34-80
2216 511	23-15-7
2216 518	23-64-48
2216 519	23-64-48
2216 757	23-33-96
2216 764	23-131-146
2216 765	23-32-98
2216 794	23-09-51
2216 795	23-09-51
2216 829	23-31-38
2216 834	23-33-96
2216 897	23-22-145
2216 898	23-22-145
2216 899	23-22-145
2216 902	23-34-116
2216 933	23-33-10
2217 092	23-22-145
2217 097	23-33-209
2217 177	23-26-64
2217 195	15-14-1
2217 251	23-66-235
2217 261	23-66-77
2217 285	23-66-135
2217 312	23-06-22
2217 348	15-03-5
2217 504	23-33-217
2217 505	23-33-217
2217 509	23-64-10
2217 510	23-64-10
2217 511	23-09-64
2217 518	23-63-181
2217 556	23-91-6
2217 656	23-33-86
2217 837	23-33-135
2217 908	23-63-126
2217 910	23-86-24
2218 305	23-63-33
2219 004	24-28-75
2219 010	24-28-73
2219 019	24-28-73
	24-28-93

MyMopar.com

PART NUMBER	CODE
2219 057.	24-28-78
2219 066.	1-48-236
2219 102.	1-48-602
2219 103.	1-48-603
	24-28-186
2219 155.	24-26-35
2219 169.	24-28-36
2219 280.	1-48-854
2219 292.	1-48-1
2219 383.	24-28-326
2219 384.	24-28-326
2219 385.	24-28-326
2219 392.	1-48-125
2219 396.	24-28-75
	24-28-78
2219 549.	24-26-100
2219 613.	24-25-20
2219 627.	1-48-158
2219 639.	24-28-232
2219 729.	24-27-5
2219 736.	24-28-387
2219 798.	24-28-93
2219 799.	24-28-93
2219 826.	24-28-5
2219 837.	24-28-220
2219 886.	1-48-599
2219 887.	1-48-46
2219 888.	1-48-88
2219 889.	1-48-151
2219 890.	1-48-151
2219 891.	1-48-854
2219 915.	24-29-1
2219 916.	24-29-1
2219 924.	24-28-73
2219 980.	1-48-258
2219 981.	1-48-258
2219 982.	1-48-258
2226 796.	21-30-28
2230 938.	8-01-17
2231 790.	23-54-111
2240 227.	5-03-1
2240 235.	14-86-35
2240 240.	17-11-3
2240 241.	17-11-3
2240 250.	8-50-103
2240 263.	8-50-304
2240 264.	8-16-1
2240 302.	21-118-6
2240 304.	6-01-3
2240 308.	11-02-1
2240 311.	11-02-1
2240 312.	11-02-1
2240 317.	17-23-3
2240 318.	7-43-1
2240 320.	21-01-3
2240 333.	9-34-5
2240 334.	9-34-5
2240 335.	9-34-5
2240 336.	9-34-5
2240 337.	9-34-5
2240 338.	9-34-5
2240 339.	9-34-5
2240 358.	17-23-3
2240 359.	17-23-3
2240 360.	17-23-3
2240 361.	17-23-3
2240 362.	17-23-3
2240 368.	9-09-2
2240 369.	9-09-2
2240 370.	9-09-2
2240 371.	9-09-2
2240 372.	9-09-2
2240 373.	9-09-2
2240 374.	9-09-2
2240 375.	9-09-2
2240 376.	9-09-2
2240 377.	9-09-2
2240 378.	9-09-2
2240 379.	9-09-2
2240 397.	7-04-1
2240 401.	14-30-8
	14-35-1
2240 410.	14-30-8
2240 436.	14-30-8
2240 437.	14-35-1
2240 454.	14-35-6
2240 463.	14-43-5
2240 464.	14-35-1
2240 465.	14-30-4
2240 466.	14-43-5
2240 470.	14-30-7
2240 471.	14-30-4
2240 472.	14-30-7
2240 473.	14-43-5
2240 474.	14-43-5
2240 477.	14-30-4
2240 478.	14-30-7
2240 479.	14-43-5
2240 480.	14-30-4
2240 496.	14-30-4
2240 526.	23-67-86
2240 527.	23-67-86
2240 529.	8-52-180
2240 533.	23-67-160
2240 536.	8-16-1
2240 544.	8-37-17
2240 547.	14-72-1
2240 548.	14-72-1
2240 572.	1-72-5
2240 574.	1-135-1
2240 602.	19-02-4
2240 608.	8-33-39
2240 612.	16-20-1
2240 614.	16-20-1
2240 620.	19-54-2
2240 627.	21-05-1
2240 628.	9-01-5
2240 629.	9-39-1
2240 634.	6-17-3
2240 647.	10-24-1
2240 650.	9-11-1
2240 651.	9-11-1
2240 684.	9-58-1
2240 686.	17-11-3
2240 731.	8-56-36
2240 732.	8-56-36
2240 742.	8-50-334
2240 743.	8-50-334
2240 744.	8-37-155
2240 747.	8-27-279
2240 749.	8-52-135
2241 075.	23-26-2
2241 084.	23-26-23
2241 085.	23-26-23
2241 098.	23-26-23
2241 126.	23-26-23
2241 127.	23-26-23
2241 142.	23-26-23
2241 165.	15-03-60
2241 167.	15-03-60
2241 219.	23-54-53
2241 234.	23-76-64
2241 235.	23-76-64
2241 494.	23-26-62
2241 495.	23-26-62
2241 520.	23-91-6
2241 521.	23-91-6
2241 592.	23-31-33
2241 618.	23-26-80
2241 624.	23-26-23
2241 625.	23-26-23
2241 687.	23-26-23
2241 688.	23-26-23
2241 689.	23-26-47
2241 691.	23-26-23
2241 692.	23-26-23
2241 693.	23-26-80
2241 694.	23-26-47
2241 695.	23-26-47
2241 700.	23-26-23
2241 716.	23-26-23
2241 721.	23-26-47
2241 731.	23-26-23
2241 732.	23-26-23
2241 735.	23-26-23
2241 740.	23-26-47
2241 742.	23-26-47
2241 780.	23-63-20
2241 781.	23-63-20
2241 784.	23-63-14
	23-63-20
2241 790.	23-36-6
2241 791.	23-36-6
2241 808.	23-26-23
2241 809.	23-26-23
2241 842.	23-20-41
2241 871.	8-35-111
2241 877.	15-03-60
2241 882.	23-31-33
2241 913.	23-31-33
2241 916.	23-18-54
2241 920.	23-26-23
2241 921.	23-26-23
2241 922.	23-26-23
2241 923.	23-26-23
2241 925.	23-26-23
2241 943.	23-31-33
2241 944.	23-31-33
2241 945.	23-31-33
2241 954.	23-63-14
2241 955.	23-63-14
2242 100.	23-34-242
2242 101.	23-34-242
2242 102.	23-34-242
2242 103.	23-34-242
2242 104.	23-34-242
2242 105.	23-34-242
2242 106.	23-34-242
2242 107.	23-34-242
2242 108.	23-34-243
2242 109.	23-34-243
2242 153.	7-16-11
2242 160.	8-34-40
2242 161.	8-34-40
2242 165.	7-16-11
2242 181.	15-11-3
2242 208.	7-26-36
2242 216.	15-11-12
2242 217.	23-32-48
2242 222.	23-34-234
2242 223.	23-34-234
2242 224.	23-32-22
2242 226.	23-34-235
2242 227.	23-34-235
2242 332.	7-26-15
2242 333.	7-26-15
2242 334.	7-26-15
2242 335.	7-26-30
2242 340.	23-51-5
2242 341.	23-51-5
2242 342.	23-51-5
2242 343.	23-51-5
2242 344.	23-51-43
2242 345.	23-51-43
2242 346.	23-51-5
2242 347.	23-51-5
2242 349.	23-34-254
2242 350.	23-51-5
2242 351.	23-51-5
2242 359.	23-04-249
2242 360.	23-34-259
2242 706.	23-63-104
2242 707.	23-63-104
2242 710.	23-09-33
2242 711.	23-09-33
2242 712.	23-64-174
2242 713.	23-64-174
2242 714.	23-63-33
2242 715.	23-63-33
2242 716.	23-64-71
2242 717.	23-64-71
2242 902.	23-14-10
2242 903.	23-14-10
2242 922.	23-64-265
2242 923.	23-64-265
2242 924.	23-64-265
2242 925.	23-64-265
2242 932.	23-64-174
2242 933.	23-64-174
2242 948.	13-66-106
2243 188.	8-57-10
2243 264.	23-63-100
2243 265.	23-63-100
2243 266.	23-63-100
2243 267.	23-63-100
2243 268.	23-63-110
2243 269.	23-63-110
2243 272.	23-63-110
2243 273.	23-63-110
2243 293.	1-48-383
2243 298.	23-18-20
2243 299.	23-18-20
2243 357.	1-48-374
2243 388.	23-64-311
2243 389.	23-64-311
2243 390.	23-39-53
2243 391.	23-39-17
2243 396.	23-39-34
2243 397.	23-39-34
2243 426.	23-48-99
2243 427.	23-48-99
2243 470.	23-40-150
2243 472.	23-40-150
2243 473.	23-40-187
2243 476.	23-40-155
2243 477.	23-40-155
2243 482.	8-50-303
2243 483.	8-50-303
2243 513.	23-63-110
2243 517.	23-39-44
2243 534.	23-86-10
2243 536.	23-40-86
2243 537.	23-40-86
2243 538.	23-40-86
2243 539.	23-40-86
2243 540.	23-34-234
2243 541.	23-34-234
2243 544.	1-74-1
2243 656.	23-86-10
2243 657.	23-86-10
2243 658.	23-26-41
2243 659.	23-26-41
2243 826.	23-64-280
2243 827.	23-64-280
2243 888.	23-21-14
2244 942.	23-34-27
2246 260.	23-108-5
2246 262.	23-108-16

MyMopar.com

PART NUMBER	CODE
2246 263. .	23-108-12
2246 265. .	23-109-36
2246 266. .	23-109-35
2246 267. . .	23-109-4
2246 268. . .	23-109-3
2246 269. . .	23-108-5
2246 270. . .	23-108-4
2246 271. .	23-108-16
2246 272. .	23-108-12
2246 276. . .	23-109-4
2246 277. . .	23-109-3
2246 422. . .	23-108-5
2246 424. .	23-108-16
2246 425. .	23-108-16
2246 508. . .	23-92-5
2246 509. . .	23-92-5
2246 510. . .	23-92-5
2246 511. ..	23-92-5
2246 514. . .	23-92-5
2246 515. . .	23-92-5
2246 516. . .	23-101-3
2246 517. . .	23-101-3
2246 618. .	23-109-36
2246 619. .	23-109-35
2246 647. . .	23-108-4
2246 648. . .	23-108-4
2246 649. . .	23-108-4
2246 650. . .	23-108-4
2246 651. . .	23-108-4
2246 652. . .	23-108-4
2246 653. .	23-108-16
2246 654. .	23-108-16
2246 655. .	23-108-16
2246 656. .	23-108-12
2246 657. .	23-108-12
2246 658. .	23-108-12
2246 659. .	23-109-36
2246 660. .	23-109-36
2246 661. .	23-109-36
2246 665. . .	23-109-4
2246 666. . .	23-109-4
2246 667. . .	23-109-4
2246 668. . .	23-109-3
2246 669. . .	23-109-3
2246 670. . .	23-109-3
2246 674. . .	23-86-3
2246 675. . .	23-86-3
2246 676. . .	23-86-3
2246 680. . .	23-86-3
2246 681. . .	23-86-3
2246 682. . .	23-86-3
2246 686. . .	23-108-4
2246 687. . .	23-108-4
2246 688. . .	23-108-4
2246 689. .	23-108-12
2246 690. .	23-108-12
2246 691. .	23-108-12
2246 698. . .	23-109-3
2246 699. . .	23-109-3
2246 700. . .	23-109-3
2246 701. . .	23-108-5
2246 702. . .	23-108-4
2246 703. . .	23-108-4
2246 704. . .	23-108-4
2246 705. . .	23-108-4
2246 706. . .	23-108-4
2246 707. . .	23-108-4
2246 708. . .	23-108-4
2246 709. . .	23-108-4
2246 710. .	23-108-16
2246 711. .	23-108-16
2246 712. .	23-108-16
2246 713. .	23-108-16
2246 714. .	23-108-16
2246 715. .	23-108-16
2246 716. .	23-108-12
2246 717. .	23-108-12
2246 718. .	23-108-12
2246 719. .	23-108-12
2246 720. .	23-108-12
2246 721. .	23-108-12
2246 722. .	23-108-12
2246 723. .	23-108-12
2246 724. .	23-108-12
2246 725. .	23-108-12
2246 726. .	23-108-12
2246 727. .	23-108-12
2246 894. . .	23-108-5
2246 895. . .	23-108-5
2246 897. . .	23-108-5
2246 898. . .	23-108-4
2246 899. . .	23-108-4
2246 900. . .	23-108-4
2246 901. . .	23-108-4
2246 902. . .	23-108-4
2246 903. . .	23-108-4
2246 904. . .	23-108-4
2246 905. . .	23-108-4
2246 910. .	23-108-16
2246 911. .	23-108-16
2246 912. .	23-108-16
2246 913. .	23-108-16
2246 914. .	23-108-12
2246 915. .	23-108-12
2246 916. .	23-108-12
2246 917. .	23-108-12
2246 918. .	23-108-12
2246 919. .	23-108-12
2246 920. .	23-108-12
2246 921. .	23-108-12
2246 930. .	23-109-36
2246 931. .	23-109-36
2246 932. .	23-109-36
2246 933. .	23-109-36
2246 934. .	23-109-35
2246 935. .	23-109-35
2246 936. .	23-109-35
2246 937. .	23-109-35
2246 938. .	23-109-35
2246 939. .	23-109-35
2246 940. .	23-109-35
2246 941. .	23-109-35
2246 942. . .	23-109-4
2246 943. . .	23-109-4
2246 944. . .	23-109-4
2246 945. . .	23-109-4
2246 946. . .	23-109-3
2246 947. . .	23-109-3
2246 948. . .	23-109-3
2246 949. . .	23-109-3
2246 950. . .	23-109-3
2246 951. . .	23-109-3
2246 952. . .	23-109-3
2246 953. . .	23-109-3
2246 958. . .	23-108-4
2246 960. . .	23-108-4
2246 961. . .	23-108-4
2246 962. . .	23-108-4
2246 963. . .	23-108-4
2246 964. . .	23-108-4
2246 965. . .	23-108-4
2246 966. .	23-108-16
2246 967. .	23-108-16
2246 968. .	23-108-16
2246 969. .	23-108-16
2246 970. .	23-108-12
2246 971. .	23-108-12
2246 972. .	23-108-12
2246 973. .	23-108-12
2246 974. .	23-108-12
2246 975. .	23-108-12
2246 976. .	23-108-12
2246 977. .	23-108-12
2246 986. . .	23-108-5
2246 987. . .	23-108-5
2246 988. . .	23-108-5
2246 989. . .	23-108-5
2246 990. . .	23-108-4
2246 991. . .	23-108-4
2246 992. . .	23-108-4
2246 993. . .	23-108-4
2246 994. . .	23-108-4
2246 995. . .	23-108-4
2246 996. . .	23-108-4
2246 997. . .	23-108-4
2249 204. . .	23-108-5
2249 208. .	23-108-16
2249 265. . .	23-33-42
2249 368. . .	23-79-33
2249 372. . .	23-20-11
	23-20-41
2249 552. . .	23-20-29
2249 645. . .	23-63-33
2249 646. . .	23-63-33
2249 647. . .	23-63-33
2249 648. . .	23-63-33
2249 667. . .	23-63-33
2249 668. . .	23-63-33
2249 669. . .	23-63-33
2249 670. . .	23-63-33
2249 671. . .	23-63-33
2249 672. . .	23-63-33
2249 673. . .	23-63-33
2249 674. . .	23-63-33
2249 675. . .	23-63-33
2249 676. . .	23-63-33
2249 677. . .	23-63-33
2249 683. .	23-64-248
2249 684. .	23-64-248
2249 685. .	23-64-248
2249 686. .	23-64-248
2249 687. .	23-64-248
2249 692. .	23-113-45
2249 693. .	23-113-45
2249 694. .	23-113-45
2249 695. .	23-113-45
2249 696. .	23-113-45
2249 697. .	23-113-45
2249 698. .	23-113-45
2249 699. .	23-113-45
2249 700. . .	23-92-5
	23-96-8
2249 701. . .	23-92-5
	23-96-8
2249 711. . .	23-84-3
2249 713. . .	23-84-3
2249 715. . .	23-84-3
2249 720. . .	23-92-5
2249 721. . .	23-92-5
2249 722. . .	23-92-5
2249 723. . .	23-92-5
2249 724. . .	23-92-5
2249 725. . .	23-92-5
2249 726. . .	23-101-3
2249 727. . .	23-101-3
2249 728. . .	23-101-3
2249 729. . .	23-101-3
2249 730. . .	23-101-3
2249 731. . .	23-101-3
2249 736. . .	23-101-3
2249 737. . .	23-101-3
2249 738. . .	23-101-3
2249 739. . .	23-101-3
2249 740. . .	23-101-3
2249 741. . .	23-101-3
2249 742. . .	23-91-6
2249 743. . .	23-91-6
2249 744. . .	23-91-6
2249 745. . .	23-91-6
2249 746. . .	23-63-33
2249 747. . .	23-63-33
2249 748. . .	23-63-33
2249 749. . .	23-63-33
2249 750. . .	23-63-33
2249 751. . .	23-63-33
2249 752. . .	23-63-33
2249 753. . .	23-63-33
2249 754. . .	23-63-33
2249 755. . .	23-63-33
2249 756. . .	23-63-33
2249 757. . .	23-63-33
2249 758. . .	23-63-33
2249 759. . .	23-63-33
2249 760. . .	23-63-33
2249 761. . .	23-63-33
2249 775. . .	23-109-5
2249 776. . .	23-76-66
2249 777. . .	23-76-66
2249 778. . .	23-76-3
2249 779. . .	23-76-3
2249 780. . .	23-76-3
2249 781. . .	23-76-3
2249 857. . .	23-76-34
	23-79-33
2249 866. .	23-113-45
2249 867. .	23-113-45
2249 868. . .	23-92-5
2249 869. . .	23-92-5
2249 872. . .	23-92-5
2249 873. . .	23-92-5
2249 878. . .	23-92-5
2249 879. . .	23-92-5
2249 880. . .	23-92-5
2249 881. . .	23-92-5
2249 884. . .	23-63-33
2249 885. . .	23-63-33
2249 901. . .	23-20-29
2249 907. .	23-31-116
2249 910. .	23-33-129
2249 911. .	23-33-129
2251 002. . .	23-92-5
2251 003. . .	23-92-5
2251 004. . .	23-92-5
2251 005. . .	23-92-5
2251 092. . .	23-101-3
2251 093. . .	23-101-3
2251 115. .	23-58-258
2251 116. .	23-58-243
2251 117. .	23-58-262
2251 118. .	23-58-257
2251 128. . .	23-58-76
2251 129. . .	23-58-76
2251 142. .	23-58-469
2251 143. .	23-58-469
2251 152. .	23-58-573
2251 153. .	23-58-573
2251 154. .	23-58-573
2251 155. .	23-58-573
2251 156. .	23-58-573
2251 157. .	23-58-573
2251 165. .	23-111-37
2251 173. . .	23-58-3
2251 174. .	23-58-569
2251 186. .	23-34-235
2251 187. .	23-34-235
2251 220. .	23-64-311

MyMopar.com

PART NUMBER	CODE
2251 221.	23-64-311
2251 222.	23-64-311
2251 223.	23-64-311
2251 269.	23-54-136
2251 270.	23-54-72
2251 293.	23-54-142
2251 300.	23-54-4
2251 301.	23-54-144
2251 302.	23-54-4
2251 304.	23-54-4
2251 312.	23-54-150
2251 320.	23-63-100
2251 321.	23-63-100
2251 325.	23-48-20
2251 328.	23-20-14
2251 329.	23-20-14
2251 332.	23-20-14
2251 333.	23-20-14
2251 344.	23-54-180
2251 345.	23-54-184
2251 351.	17-19-20
2251 358.	23-54-74
2251 360.	23-54-193
2251 372.	23-54-141
2251 376.	23-19-84
2251 377.	23-19-84
2251 398.	4-23-7
2251 404.	23-20-14
2251 405.	23-20-14
2251 422.	23-22-145
2251 433.	23-32-79
	23-48-24
2251 444.	23-86-19
2251 445.	23-86-19
2251 446.	23-86-19
2251 447.	23-86-19
2251 448.	23-86-19
2251 451.	23-32-51
2251 452.	23-63-181
2251 458.	23-63-171
2251 461.	23-54-205
2251 466.	23-54-1
2251 467.	23-54-1
2251 475.	23-42-46
2251 477.	23-34-16
2251 480.	23-34-242
2251 481.	23-34-242
2251 483.	23-32-48
2251 484.	23-34-242
2251 485.	23-34-242
2251 486.	23-34-242
2251 487.	23-34-242
2251 490.	23-20-14
2251 491.	23-20-14
2251 512.	23-51-41
2251 514.	23-59-35
2251 515.	23-59-35
2251 526.	23-32-49
2251 534.	23-48-189
2251 539.	23-48-19
2251 544.	23-48-11
2251 546.	23-48-98
2251 547.	23-48-98
2251 548.	23-48-28
2251 550.	23-48-19
2251 566.	23-51-5
2251 567.	23-51-5
2251 569.	23-32-69
2251 572.	23-40-92
2251 573.	23-40-92
2251 582.	23-40-92
2251 583.	23-40-92
2251 584.	23-40-85
2251 585.	23-40-85
2251 586.	23-34-26
2251 587.	23-34-26
2251 600.	23-58-607
2251 604.	23-34-234
2251 605.	23-34-234
2251 612.	23-59-42
2251 613.	23-59-42
2251 614.	23-59-42
2251 615.	23-59-42
2251 617.	23-58-605
2251 620.	23-36-120
2251 621.	23-36-120
2251 622.	23-59-41
2251 623.	23-59-41
2251 644.	23-19-82
2251 645.	23-19-82
2251 647.	23-58-228
2251 674.	23-109-38
2251 676.	23-32-87
	23-48-22
2251 678.	23-48-19
2251 680.	23-32-80
	23-48-20
2251 684.	23-32-93
2251 685.	23-32-93
2251 686.	23-32-92
2251 687.	23-32-92
2251 688.	23-32-92
2251 689.	23-32-92
2251 694.	23-54-141
2251 695.	23-54-142
2251 698.	23-36-123
2251 699.	23-36-123
2251 710.	23-54-107
2251 711.	23-54-107
2251 722.	14-88-8
2251 724.	23-34-346
2251 725.	14-87-2
2251 737.	23-54-17
2251 738.	23-54-17
2251 746.	23-54-194
2251 747.	23-54-207
2251 772.	23-09-67
2251 773.	23-09-67
2251 795.	23-54-140
2251 800.	23-34-346
2251 801.	23-09-67
2251 806.	23-86-19
2251 807.	23-86-19
2251 808.	23-86-36
2251 809.	23-86-36
2251 811.	23-09-64
2251 812.	23-18-29
2251 828.	23-54-165
2251 830.	23-34-24
2251 831.	23-34-24
2251 836.	23-18-26
2251 837.	23-18-26
2251 848.	23-18-20
2251 849.	23-18-20
2251 856.	23-58-269
2251 857.	23-58-269
2251 858.	23-58-333
2251 868.	23-04-205
2251 876.	23-18-26
2251 877.	23-18-26
2251 898.	23-48-65
2251 899.	23-58-570
2251 902.	23-32-46
2251 905.	23-36-31
2251 930.	23-41-7
2251 936.	23-41-53
2251 939.	23-41-7
2251 949.	23-18-29
	23-18-42
2251 954.	23-41-53
2251 955.	23-41-53
2251 966.	23-47-6
2251 967.	23-47-6
2251 980.	23-58-220
2251 981.	23-41-14
2251 982.	23-41-53
2252 000.	23-54-73
2252 001.	23-41-106
2252 029.	23-41-286
2252 040.	23-14-147
2252 041.	23-14-147
2252 042.	23-22-145
2252 043.	23-22-145
2252 044.	23-18-11
2252 045.	23-18-11
2252 046.	23-18-11
2252 048.	23-41-33
2252 049.	23-41-33
2252 050.	23-41-33
2252 051.	23-41-33
2252 053.	23-18-26
2252 054.	23-18-26
2252 055.	23-18-26
2252 058.	23-18-12
2252 088.	23-34-283
2252 098.	23-17-9
2252 100.	8-50-349
2252 104.	8-50-303
2252 105.	8-50-303
2252 111.	23-34-279
2252 128.	23-64-299
2252 136.	23-64-198
2252 137.	23-64-198
2252 138.	23-64-299
2252 139.	23-64-299
2252 151.	1-67-3
2252 152.	23-09-67
2252 153.	23-09-67
2252 154.	23-34-281
2252 155.	1-67-5
2252 169.	23-54-28
2252 170.	23-54-29
2252 172.	23-08-66
2252 176.	22-20-87
2252 177.	22-20-87
2252 183.	23-32-82
2252 184.	8-47-126
2252 188.	23-42-59
2252 208.	8-56-73
2252 209.	8-56-73
2252 212.	23-34-227
2252 214.	8-56-23
2252 216.	8-56-1
2252 217.	8-56-1
2252 233.	8-56-40
2252 252.	23-36-123
2252 253.	23-36-123
2252 254.	23-36-134
2252 255.	23-36-134
2252 272.	8-55-7
2252 273.	8-55-7
2252 274.	23-26-41
2252 275.	23-26-41
2252 278.	23-51-5
2252 279.	23-51-5
2252 284.	23-32-27
2252 285.	23-32-27
2252 286.	23-32-27
2252 287.	23-32-27
2252 294.	23-32-27
2252 295.	23-32-27
2252 296.	23-32-27
2252 297.	23-34-342
	23-36-123
2252 298.	23-40-86
2252 299.	23-40-86
2252 300.	23-36-125
2252 301.	23-36-125
2252 302.	13-54-9
	23-32-112
2252 303.	23-32-112
2252 320.	23-19-92
2252 330.	23-63-55
2252 331.	23-63-55
2252 332.	23-32-53
2252 333.	23-32-53
2252 358.	8-55-140
2252 368.	23-42-17
2252 370.	23-36-53
2252 371.	23-36-53
2252 372.	23-101-26
2252 373.	23-101-26
2252 380.	23-54-46
2252 383.	8-57-15
2252 396.	23-63-172
2252 602.	23-64-48
2252 603.	23-64-48
2252 604.	23-63-181
2252 608.	23-63-58
2252 610.	23-112-70
2253 006.	23-34-167
2253 024.	23-58-208
2253 025.	23-58-208
2253 038.	23-11-3
2253 039.	23-11-3
2253 040.	23-34-120
2253 041.	23-34-120
2253 044.	23-11-3
2253 045.	23-11-3
2253 046.	23-34-120
2253 047.	23-34-120
2253 050.	23-34-120
2253 051.	23-34-120
2253 052.	23-34-120
2253 053.	23-34-120
2253 054.	23-34-120
2253 055.	23-34-120
2253 058.	23-11-1
2253 059.	23-11-1
2253 060.	23-11-1
2253 061.	23-11-1
2253 062.	23-11-1
2253 063.	23-11-1
2253 070.	23-34-80
2253 071.	23-34-80
2253 072.	23-34-80
2253 073.	23-34-80
2253 084.	23-32-105
2253 085.	23-32-105
2253 096.	23-32-105
2253 097.	23-32-105
2253 106.	23-32-93
2253 107.	23-32-93
2253 108.	23-32-93
2253 109.	23-32-93
2253 142.	12-01-5
2253 143.	12-01-5
2253 148.	23-32-49
2253 149.	23-32-49
2253 156.	23-66-65
2253 157.	23-66-65
2253 158.	23-33-109
2253 159.	15-03-3
2253 175.	23-34-17
2253 188.	12-01-5
2253 189.	12-01-5
2253 190.	23-54-3

MyMopar.com

PART NUMBER	CODE
2253 205.	23-64-254
	23-64-299
2253 206.	23-64-299
2253 207.	23-64-299
2253 208.	23-64-254
2253 209.	23-64-254
2253 210.	23-36-118
2253 211.	23-36-118
2253 213.	23-04-241
2253 220.	12-01-5
2253 221.	12-01-5
2253 224.	23-36-66
2253 225.	23-36-66
2253 228.	23-54-3
2253 235.	23-34-80
2253 237.	23-19-8
2253 238.	23-19-8
2253 239.	23-48-188
2253 240.	23-48-188
2253 241.	15-03-3
2253 244.	23-36-118
2253 245.	23-36-118
2253 249.	15-03-3
2253 256.	12-01-5
2253 257.	12-01-5
2253 270.	23-19-8
2253 284.	23-11-1
2253 285.	23-11-1
2253 286.	23-11-1
2253 287.	23-11-1
2253 288.	23-11-1
2253 289.	23-11-1
2253 290.	23-34-120
2253 291.	23-34-120
2253 292.	23-34-120
2253 293.	23-34-120
2253 294.	23-34-120
2253 295.	23-34-120
2253 344.	23-34-120
2253 346.	23-34-120
2253 347.	23-34-120
2253 348.	23-34-80
2253 363.	23-19-8
2253 372.	23-32-105
2253 373.	23-32-105
2253 382.	23-32-115
2253 383.	23-32-115
2253 384.	23-32-17
2253 467.	23-34-80
2253 539.	23-66-65
2253 586.	23-32-17
2253 718.	12-01-7
2253 719.	12-01-7
2253 722.	12-01-7
2253 723.	12-01-7
2253 731.	23-32-17
2253 744.	23-34-234
2253 745.	23-34-234
2253 776.	23-34-120
2253 777.	23-34-120
2253 778.	23-11-1
2253 779.	23-11-1
2253 804.	23-34-354
2253 818.	23-32-105
2253 819.	23-32-105
2253 852.	23-34-235
2253 853.	23-34-235
2253 854.	23-34-235
2253 855.	23-34-235
2253 856.	23-34-235
2253 857.	23-34-235
2253 858.	23-34-235
2253 859.	23-34-235
2253 910.	23-64-254
2253 911.	23-64-254
2253 914.	23-64-254
2253 915.	23-64-254
2253 918.	23-64-254
2253 919.	23-64-254
2253 921.	23-64-254
2253 926.	23-64-299
2253 927.	23-64-299
2254 014.	23-51-19
2254 015.	23-51-19
2254 016.	23-51-19
2254 017.	23-51-19
2254 018.	23-51-19
2254 019.	23-51-19
2254 020.	23-51-6
2254 021.	23-51-6
2254 028.	23-64-48
2254 029.	23-64-48
2254 030.	23-64-12
2254 039.	23-39-19
2254 040.	23-18-25
2254 041.	23-18-25
2254 042.	23-64-12
2254 043.	23-64-12
2254 097.	23-32-40
2254 110.	23-32-98
2254 120.	23-51-12
2254 121.	23-51-12
2254 124.	23-63-33
2254 125.	23-63-33
2254 126.	23-51-19
2254 127.	23-51-19
2254 132.	23-36-31
2254 133.	23-36-31
2254 357.	14-01-25
2254 382.	23-63-33
2254 383.	23-63-33
2254 384.	23-63-33
2254 385.	23-63-33
2254 396.	23-34-342
2254 428.	23-51-43
2254 429.	23-51-43
2254 474.	23-63-127
2254 475.	23-63-127
2254 484.	23-64-48
2254 485.	23-64-48
2254 525.	23-23-75
2254 566.	23-86-19
2254 567.	23-86-19
2254 575.	23-48-43
2254 577.	23-48-90
2254 586.	23-63-126
2254 587.	23-63-126
2254 608.	23-34-236
2254 609.	23-34-236
2254 611.	22-20-29
2254 612.	23-51-6
2254 613.	23-51-6
2254 618.	23-32-112
2254 619.	23-32-112
2254 620.	23-32-114
2254 621.	23-32-114
2254 622.	23-34-257
2254 623.	23-34-257
2254 624.	23-34-246
2254 625.	23-34-246
2254 626.	23-32-98
2254 627.	23-64-48
2254 630.	23-19-74
2254 645.	22-20-87
2254 646.	22-20-29
2254 658.	23-34-235
2254 659.	23-34-235
2254 661.	23-32-51
2254 664.	23-32-70
2254 665.	23-32-70
2254 666.	23-32-50
2254 667.	23-32-58
2254 668.	23-04-205
2254 675.	23-32-65
2254 676.	23-32-46
2254 684.	22-20-87
2254 706.	23-63-33
2254 707.	23-63-33
2254 712.	23-58-336
2254 714.	23-58-335
2254 715.	23-58-337
2254 763.	23-54-53
2254 766.	23-63-37
2254 767.	23-63-37
2254 780.	23-51-5
2254 781.	23-51-5
2254 782.	23-63-106
2254 785.	4-23-2
2254 795.	23-34-40
2254 799.	23-15-21
2254 801.	23-34-10
2254 810.	23-32-79
2254 849.	23-09-71
2254 996.	23-63-21
2254 997.	23-63-21
2254 998.	23-32-83
2254 999.	23-32-83
2255 027.	23-63-110
2255 067.	23-54-59
2255 091.	23-26-53
2255 118.	23-34-273
2255 126.	8-56-40
2255 206.	23-54-103
2255 207.	23-54-103
2255 224.	23-64-281
2255 225.	23-64-281
2255 231.	23-32-51
2255 261.	23-19-84
2255 333.	23-42-51
2255 336.	23-86-19
2255 382.	8-55-23
2255 583.	4-23-2
	14-01-25
2255 627.	23-48-99
2255 704.	23-32-29
2255 932.	23-11-1
2255 933.	23-11-1
2256 203.	8-37-1
2256 218.	8-37-504
2256 282.	23-67-194
2256 302.	8-37-155
2256 334.	8-37-372
2256 348.	8-37-275
2256 350.	8-37-1
2256 351.	8-37-136
2256 369.	23-33-20
2256 396.	24-24-150
2256 432.	8-05-20
	8-53-294
2256 449.	8-35-85
2256 478.	24-24-5
2256 479.	1-48-801
	24-24-20
2256 483.	1-48-801
	24-24-20
2256 509.	23-67-160
2256 514.	23-67-160
2256 518.	23-67-160
2256 544.	23-67-195
2256 590.	1-48-770
2256 614.	23-58-534
2256 616.	1-48-70
	1-48-190
	23-33-231
	23-54-170
	23-58-535
	24-24-140
2256 626.	1-48-191
	23-54-169
2256 681.	1-48-770
2256 702.	14-02-70
2256 800.	8-53-327
2256 966.	8-05-31
	8-12-17
	8-13-6
	8-19-2
	8-31-18
	8-37-93
	8-39-17
	8-40-19
2256 966 Cont'd	8-41-39
	8-41-64
	8-42-12
	8-50-159
	8-55-300
	8-56-33
	8-57-109
2257 085.	8-37-372
2257 091.	8-37-90
2257 100.	8-55-63
	8-56-27
	8-57-89
2257 102.	8-15-3
2257 182.	1-04-12
2257 195.	1-48-7
2257 197.	1-48-7
2257 205.	8-37-275
2257 209.	8-37-1
2257 213.	8-37-136
2257 232.	8-37-85
2257 258.	23-67-5
2257 259.	23-67-5
2257 267.	8-50-125
2257 272.	8-37-15
	14-02-29
2257 273.	8-37-16
2257 275.	21-30-28
2257 280.	1-82-49
2257 299.	8-30-1
	23-41-95
2257 376.	8-37-90
2257 429.	8-42-25
2257 440.	8-37-88
	8-39-15
	8-41-36
	8-50-156
2257 444.	14-72-33
2257 448.	8-53-234
2257 452.	24-24-150
2257 477.	8-05-16
	8-53-296
2257 478.	1-48-191
	8-42-31
	23-54-169
	23-58-534
	24-24-156
	24-28-363
2257 480.	8-20-8
2257 481.	23-67-194
2257 645.	8-37-162
2257 651.	8-37-95
2257 652.	8-37-1
2257 660.	8-37-136
2257 692.	1-82-2
2257 703.	23-18-106
2257 719.	8-50-171
2257 720.	8-50-156
2257 722.	8-39-15
2257 723.	8-39-3
2257 744.	23-41-95
2257 840.	21-84-1

MyMopar.com

PART NUMBER	CODE
2257 848. . .	24-24-32
2257 849. . .	23-67-79
2257 865. . .	8-41-35
2257 876. .	23-33-227
2257 878. . .	8-35-85
2257 905. .	23-33-213
2257 921. . . .	8-37-1
2257 923. . .	8-37-136
2257 926. . .	8-37-275
2257 930. . .	8-37-10
2257 942. .	23-33-220
2257 943. .	23-33-220
2257 944. .	23-33-220
2257 945. .	23-33-220
2257 951. . .	8-05-16
	8-53-296
2257 953. .	23-67-194
2257 955. . .	1-48-191
	1-88-116
	8-05-16
	8-42-31
	23-54-169
	23-58-534
	23-67-194
	24-24-20
	24-24-156
2257 979. . . .	8-19-3
2257 989. . .	14-02-15
2258 008. . . .	8-15-4
2258 010. .	23-41-168
2258 027. . .	8-05-16
	8-53-296
2258 033. . . .	8-19-3
2258 053. . .	8-37-190
2258 074. . .	8-15-52
2258 076. . . .	8-15-4
2258 077. .	23-54-178
2258 084. . . .	8-15-4
2258 085. .	23-41-167
2258 089. . . .	8-15-4
2258 090. . . .	8-15-4
2258 092. . . .	8-15-4
2258 093. . .	24-24-10
2258 096. .	24-24-150
2258 099. .	23-54-178
2258 102. . . .	8-16-6
2258 106. . .	23-67-5
2258 107. . .	23-67-5
2258 108. . .	23-67-5
2258 109. . .	23-67-5
2258 111. . . .	8-15-4
2258 118. . . .	8-16-4
2258 119. . .	1-82-25
2258 126. . . .	8-19-3
2258 137. . .	8-37-275
2258 161. . .	1-48-940
	24-24-159
2258 166. . .	1-48-942
	24-24-156
2258 168. . .	1-48-10

PART NUMBER	CODE
2258 170. .	24-24-161
2258 171. . .	1-48-12
	24-24-164
2258 172. . .	1-48-12
	24-24-164
2258 173. . .	1-48-12
	24-24-164
2258 174. . .	1-48-12
	24-24-164
2258 196. . . .	8-15-4
2258 197. . .	8-15-52
2258 198. . .	8-15-52
2258 202. . . .	8-15-4
2258 203. . .	8-15-52
2258 211. . .	8-05-16
	8-53-296
2258 235. .	23-33-220
2258 236. .	23-33-220
2258 237. .	23-33-220
2258 238. .	23-33-220
2258 240. . .	8-37-275
2258 241. . .	8-37-136
2258 242. . . .	8-37-1
2258 251. . .	23-33-20
2258 256. . .	8-37-372
2258 257. . .	8-37-372
2258 260. . .	8-37-372
2258 261. . . .	8-37-1
2258 263. . .	24-24-29
2258 264. . .	1-48-774
2258 270. . .	1-88-170
2258 271. . . .	1-88-6
2258 277. .	23-33-240
2258 284. . . .	8-17-2
2258 297. . .	8-19-83
2258 301. . . .	8-19-3
2258 332. . .	8-19-15
2258 335. . . .	1-88-6
2258 342. . .	1-48-76
	1-48-940
	24-24-159
2258 346. . .	1-48-26
2258 348. . .	1-48-12
	24-24-164
2258 349. . .	1-48-12
	24-24-164
2258 350. . .	1-48-12
	24-24-164
2258 351. . .	1-48-12
	24-24-164
2258 359. . .	1-48-942
	24-24-156
2258 361. . .	23-41-95
2258 385. . .	8-37-418
2258 395. . . .	8-15-3
2258 398. . .	8-37-389
2258 399. . . .	8-15-2
2258 402. . . .	8-15-2
2258 404. . . .	8-56-2
2258 406. . . .	8-15-2

PART NUMBER	CODE
2258 412. . .	14-72-5
2258 413. . . .	8-37-2
2258 423. . . .	8-15-2
2258 425. . . .	8-15-2
2258 427. . .	8-19-15
2258 428. .	23-58-189
2258 436. . .	8-38-23
2258 439. . . .	8-15-2
2258 455. . .	23-67-85
2258 457. . .	23-67-79
2258 458. . .	23-67-79
2258 459. . .	23-67-79
2258 463. . . .	1-21-1
2258 468. . .	1-48-771
2258 470. . .	1-48-12
2258 471. . .	1-48-12
2258 472. . .	1-48-12
2258 473. . .	1-48-12
2258 474. . .	1-48-940
2258 479. . .	1-48-942
2258 481. . .	1-48-70
	23-33-101
2258 493. . .	8-37-90
2258 497. . .	8-19-87
2258 504. . . .	8-34-1
2258 505. . . .	8-34-1
2258 517. . .	8-32-15
2258 538. . .	8-37-90
2258 543. . .	8-37-90
2258 552. . .	23-67-18
2258 554. . .	23-67-79
2258 555. . .	23-67-79
2258 556. . .	23-67-76
2258 562. . .	23-67-18
2258 564. . .	23-67-79
2258 565. . .	23-67-79
2258 582. . .	8-37-190
2258 584. . .	23-41-55
2258 588. . .	8-33-121
2258 589. . .	23-41-55
2258 590. . . .	8-16-4
2258 591. . . .	8-16-4
2258 592. . .	23-41-55
2258 609. . .	23-63-58
2258 625. . .	24-24-29
2258 626. . .	1-48-774
2258 651. . . .	8-16-6
2258 677. . . .	8-15-4
2258 679. . . .	1-09-1
2258 681. . .	23-41-55
2258 682. . .	23-41-55
2258 683. . .	23-41-55
2258 684. . .	23-41-55
2258 685. . .	23-41-55
2258 686. . .	23-41-55
2258 687. . .	23-41-55
2258 688. . .	23-41-55
2258 689. . .	23-41-55
2258 690. . .	23-41-55

PART NUMBER	CODE
2258 691. . .	23-41-55
2258 700. . .	8-50-82
2258 704. . .	8-50-126
2258 710. . .	8-50-129
2258 723. . .	8-33-121
2258 731. . . .	8-15-4
2258 739. .	23-54-178
2258 745. . . .	1-88-6
2258 751. . .	8-15-33
2258 755. . .	8-05-11
	8-53-312
2258 760. . . .	8-34-1
2258 761. . . .	8-34-1
2258 771. . .	1-88-67
	1-88-162
2258 779. . .	1-82-21
2258 780. . .	1-82-39
2258 782. . .	1-82-25
2258 787. . .	1-14-40
2258 815. . .	24-24-85
2258 823. .	23-67-161
2258 825. .	24-24-124
2258 826. . . .	1-21-1
2258 831. . .	1-88-120
2258 839. . . .	1-82-2
2258 850. . . .	8-15-4
2258 852. . .	14-02-2
2258 853. . .	14-02-2
2258 858. . .	14-02-4
2258 859. . .	14-02-3
2258 860. . .	8-15-13
2258 862. . .	14-72-9
2258 864. . .	8-58-60
2258 879. . . .	8-15-4
2258 881. . .	1-88-10
2258 886. . . .	8-15-4
2258 888. . . .	1-88-1
2258 897. . . .	8-19-3
2258 898. .	23-18-107
2258 899. . . .	1-88-7
2258 902. . . .	8-15-4
2258 910. . . .	1-13-1
2258 912. . . .	1-82-8
2258 920. . . .	1-88-1
2258 926. . . .	1-82-6
2258 929. . . .	1-82-6
2258 933. . . .	1-88-1
2258 934. . . .	1-88-6
2258 937. . . .	1-88-6
2258 939. . .	1-88-10
2258 972. .	23-41-171
2258 983. .	23-41-167
2258 993. . . .	8-15-4
2258 994. . . .	8-15-4
2259 028. . . .	4-23-2
2259 031. . .	23-33-96
2259 038. . .	23-19-82
2259 039. . .	23-19-82
2259 052. . .	23-34-80

PART NUMBER	CODE
2259 053. . .	23-34-80
2259 054. . .	23-63-33
2259 055. . .	23-63-33
2259 067. . .	23-63-19
2259 102. .	23-64-299
2259 103. .	23-64-299
2259 105. . .	15-03-60
2259 112. . .	1-48-383
2259 118. . . .	4-23-4
2259 122. . .	23-20-65
2259 123. . .	23-20-65
2259 130. . .	23-39-44
2259 142. . .	23-20-14
2259 143. . .	23-20-14
2259 144. . .	23-20-14
2259 145. . .	23-20-14
2259 146. . .	23-20-14
2259 147. . .	23-20-14
2259 154. . .	23-36-5
2259 155. . .	23-36-5
2259 158. . .	23-11-1
2259 159. . .	23-11-1
2259 160. . .	23-11-1
2259 161. . .	23-11-1
2259 171. . .	23-54-72
2259 173. .	23-32-106
2259 188. . .	23-15-9
2259 196. . .	23-86-19
2259 197. . .	23-86-19
2259 200. .	23-54-160
2259 214. . .	23-14-53
2259 215. . .	23-14-53
2259 221. . .	23-54-3
2259 250. . .	23-47-6
2259 258. . .	23-32-56
2259 259. . .	23-32-56
2259 265. . .	7-26-32
2259 269. .	23-40-155
2259 275. .	23-40-150
2259 276. .	23-40-150
2259 277. .	23-40-150
2259 278. .	23-40-170
2259 279. .	23-40-170
2259 280. .	23-40-155
2259 281. .	23-40-155
2259 282. .	23-40-190
2259 283. .	23-40-187
2259 284. .	23-40-187
2259 285. .	23-40-187
2259 299. . .	23-19-84
2259 300. .	23-19-177
2259 301. .	23-19-177
2259 308. .	23-34-242
2259 309. .	23-34-242
2259 310. .	23-34-243
2259 311. .	23-34-243
2259 312. .	23-64-240
2259 313. .	23-64-240
2259 329. . .	1-48-839
2259 330. . .	1-48-383

MyMopar.com

PART NUMBER	CODE
2259 344	23-63-127
2259 345	23-63-127
2259 366	8-05-6
2259 380	23-32-107
2259 383	23-63-171
2259 387	23-42-16
2259 388	23-42-23
2259 389	23-42-16
2259 394	23-39-30
2259 395	23-39-30
2259 396	23-42-38
2259 413	23-19-178
2259 417	23-63-100
2259 418	23-63-100
2259 419	23-64-311
2259 420	23-64-311
2260 004	5-27-1
2260 005	5-27-1
2260 008	5-31-11
2260 010	5-31-11
2260 016	5-31-12
2260 017	5-39-3
2260 018	5-39-3
2260 021	6-22-4
2260 023	6-27-5
2260 026	6-38-1
2260 027	6-38-1
2260 033	6-24-1
2260 034	6-24-10
2260 044	6-35-16
2260 046	5-39-11
2260 047	6-22-1
2260 048	6-38-1
2260 065	5-27-1
2260 069	5-31-11
2260 071	5-28-8
2260 073	6-50-1
2260 074	5-27-1
2260 099	19-14-6
2260 158	22-01-5
2260 160	22-01-42
2260 210	4-23-1
2260 212	4-23-1
2260 223	23-33-245
2260 423	4-26-17
2260 435	13-33-68
2260 437	13-36-5
2260 439	12-04-4
2260 465	23-32-110
2260 466	12-04-22
2260 469	23-32-110
2260 472	23-32-110
2260 473	23-32-110
2260 484	19-15-48
2260 511	8-33-5
2260 534	22-03-1
2260 535	22-03-1
2260 538	22-04-2
2260 540	22-05-14
2260 541	22-05-14
2260 548	5-26-4
2260 549	5-26-4
2260 557	4-26-17
2260 609	23-32-17
2260 654	5-03-6
2260 678	6-52-1
2260 703	5-31-11
2260 705	5-31-11
2260 709	5-34-6
2260 710	5-34-1
2260 718	6-52-10
2260 719	6-22-15
2260 727	6-35-1
2260 728	6-35-1
2260 734	5-31-15
2260 736	5-27-1
2260 738	5-27-1
2260 739	6-35-1
2260 744	6-52-10
2260 746	6-52-10
2260 787	5-12-1
2260 789	5-03-23
2260 792	5-26-2
2260 800	4-26-1
2260 801	4-26-1
2260 807	4-26-18
2260 812	5-03-6
2260 830	4-26-1
2260 831	4-26-1
2260 835	5-03-23
2260 837	5-70-1
2260 838	5-71-1
2260 839	5-71-2
2260 840	5-69-1
2260 842	5-64-1
2260 843	5-70-1
2260 844	5-71-1
2260 846	5-69-1
2260 856	21-30-413
2260 857	21-30-336
2260 858	21-30-336
2260 859	21-30-336
2260 860	21-30-336
2260 861	21-30-336
2260 886	5-03-6
2260 904	22-03-2
2260 905	22-03-2
2260 965	19-30-4
2260 966	19-30-4
2260 967	19-30-4
2260 968	19-30-4
2260 969	19-30-4
2260 970	23-84-30
2260 971	23-84-30
2260 972	23-84-30
2260 973	23-84-30
2260 974	23-84-30
2260 975	19-30-4
2260 976	19-30-4
2260 977	19-30-4
2260 978	19-30-4
2260 979	19-30-4
2260 981	19-30-4
2260 983	8-33-4
2260 984	19-30-4
2260 985	19-30-4
2260 986	19-30-4
2260 987	19-30-4
2260 992	19-31-1
2260 996	19-30-4
2260 997	19-30-4
2260 998	19-30-4
2264 057	14-11-9
2264 060	14-11-20
2264 092	10-03-4
2264 105	9-15-1
2264 116	14-29-15
2264 140	9-67-4
2264 165	9-16-17
2264 167	14-11-4
2264 173	9-07-5
2264 193	14-30-2
2264 215	24-25-15
2264 217	24-25-15
2264 218	24-25-10
2264 219	24-25-10
2264 221	24-25-45
2264 333	14-11-1
2264 341	14-11-9
2264 344	10-02-62
2264 354	9-07-5
2264 374	10-07-6
2264 376	14-06-1
2264 379	7-06-1
2264 382	14-06-1
2264 401	9-01-24
2264 413	14-11-9
2264 415	14-14-1
2264 449	7-06-1
2264 450	7-06-14
2264 459	8-28-36
2264 463	7-03-1
2264 472	14-01-16
2264 474	14-07-1
2264 480	14-14-20
2264 517	7-04-5
2264 518	8-28-15
2264 523	8-28-36
2264 535	14-01-1
2264 538	14-07-1
2264 539	14-11-28
2264 545	14-29-15
2264 555	24-25-45
2264 570	14-30-1
2264 571	14-30-1
2264 572	14-30-1
2264 573	14-30-1
2264 579	14-39-45
2264 580	14-39-45
2264 586	10-22-40
2264 587	10-22-15
2264 597	9-45-1
2264 602	21-142-12
2264 604	14-02-6
2264 606	14-29-2
2264 609	14-29-2
2264 629	6-09-1
2264 640	14-11-9
2264 646	14-14-1
2264 648	14-11-9
2264 652	24-25-15
2264 653	9-45-1
2264 668	9-64-24
2264 674	9-67-4
2264 675	9-67-4
2264 678	9-64-24
2264 679	9-64-24
2264 686	14-06-10
2264 696	14-25-5
2264 701	21-142-12
2264 702	14-14-20
	14-26-3
2264 706	14-25-12
2264 720	14-11-1
2264 735	14-06-1
2264 736	14-06-10
2264 741	14-26-2
2264 742	14-11-9
2264 744	14-25-3
	21-142-12
2264 751	14-06-10
2264 754	10-02-24
2264 757	9-48-56
2264 800	14-11-20
2264 801	14-11-33
2264 865	24-25-15
2264 866	24-25-10
2264 867	24-25-10
2264 868	24-25-10
2264 871	24-25-45
2264 872	19-54-133
2264 873	19-54-115
2264 879	9-64-22
2264 880	8-28-36
2264 962	8-27-320
2265 018	9-67-4
2265 023	9-64-24
2265 027	14-06-1
2265 034	7-02-1
2265 036	7-02-16
2265 045	14-29-7
2265 132	13-64-4
2265 133	13-64-4
2265 134	13-64-4
2265 135	13-64-4
2265 136	13-66-16
2265 137	13-66-16
2265 138	13-66-16
2265 139	13-66-16
2265 140	13-64-4
2265 141	13-64-4
2265 142	13-66-16
2265 143	13-66-16
2265 144	13-66-16
2265 145	13-66-16
2265 177	21-30-336
2265 178	21-30-336
2265 179	21-30-336
2265 180	21-30-336
2265 181	21-30-336
2265 186	21-30-320
2265 218	22-03-1
2265 219	22-03-1
2265 259	4-25-1
2265 269	4-23-24
2265 277	4-25-14
2265 281	4-25-3
2265 282	4-25-3
2265 296	4-25-5
2265 314	4-25-7
2265 315	4-25-14
2265 316	4-25-18
2265 320	4-23-38
2265 326	23-84-30
2265 327	23-84-30
2265 328	23-84-30
2265 329	23-84-30
2265 332	8-33-4
2265 341	19-30-4
2265 354	22-03-2
2265 355	22-03-2
2265 360	4-26-1
2265 361	4-26-1
2265 362	5-64-1
2265 363	5-64-1
2265 373	22-04-4
2265 390	22-05-14
2265 391	22-05-14
2265 408	9-69-4
2265 409	9-69-4
2265 411	13-01-1
2265 412	13-01-1
2265 413	13-01-1
2265 418	9-69-4
2265 420	9-69-4
2265 464	6-13-4
2265 503	8-33-6
2265 504	8-33-6
2265 505	8-33-6
2265 517	8-33-4
2265 531	22-01-51
2265 535	22-01-42
2265 550	22-03-2
2265 551	22-03-2
2265 564	5-13-1
2265 565	5-13-1
2265 572	5-13-9
2265 581	5-13-1

MyMopar.com

PART NUMBER	CODE
2265 584	5-13-1
2265 585	5-13-1
2265 600	19-30-4
2265 613	19-15-33
2265 615	19-30-4
2265 616	19-30-4
2265 617	19-30-4
2265 618	19-30-4
2265 621	19-14-1
2265 622	19-14-24
2265 635	5-44-8
2265 638	22-01-42
2265 642	5-39-20
2265 650	19-46-8
2265 652	19-14-21
2265 654	19-14-23
2265 656	19-14-4
2265 658	19-14-38
2265 662	21-30-5
2265 664	19-14-10
2265 670	19-14-1
2265 676	19-46-3
2265 682	19-46-16
2265 687	19-46-19
2265 688	19-46-12
2265 689	19-46-55
2265 693	19-14-10
2265 697	19-14-68
2265 777	5-03-5
2265 781	5-03-5
2265 811	3-35-14
2265 826	9-71-5
2265 836	9-71-5
2265 930	6-52-1
2265 932	6-52-1
2265 937	6-52-1
2265 938	6-52-11
2265 939	6-52-12
2265 942	6-52-17
2265 943	6-52-10
2265 944	6-52-10
2265 950	11-05-1
2265 952	11-05-1
2265 955	11-05-1
2265 959	11-05-4
2265 963	11-05-4
2265 964	11-01-1
2265 968	11-02-4
2265 972	11-10-3
2265 974	11-01-1
2265 975	11-05-1
2265 977	11-05-4
2265 985	11-10-3
2265 986	11-01-1
2265 987	11-01-1
2265 988	11-01-1
2266 033	11-09-3
2266 039	11-01-1
2266 123	22-08-5
2266 135	22-01-42
2266 136	22-01-42
2266 137	22-01-42
2266 139	22-01-42
2266 143	22-01-42
2266 144	22-01-42
2266 176	21-30-2
2266 206	19-30-4
2266 207	19-30-4
2266 208	19-30-4
2266 209	8-33-6
2266 210	8-33-6
2266 212	19-30-4
2266 213	19-30-4
2266 216	19-30-4
2266 220	8-33-19
2266 222	8-33-4
2266 223	8-33-6
2266 232	6-13-1
2266 233	6-13-4
2266 235	6-14-1
2266 239	6-16-1
2266 294	5-03-5
2266 295	5-03-5
2266 296	5-03-5
2266 297	5-03-5
2266 298	22-04-11
2266 378	22-06-18
2266 382	22-03-1
2266 383	22-03-1
2266 384	22-03-1
2266 385	22-03-1
2266 386	22-03-1
2266 387	22-03-1
2266 390	22-03-1
2266 391	22-03-1
2266 393	5-03-5
2266 403	21-30-365
2266 404	21-30-365
2266 405	21-30-365
2266 410	19-48-1
2266 413	21-30-320
2266 681	19-15-4
2266 682	19-15-4
2266 683	19-15-4
2266 684	19-15-4
2266 685	19-15-23
2266 686	6-50-10
	19-15-23
2266 687	19-15-33
2266 707	19-15-28
2266 708	19-15-17
2266 716	19-30-4
2266 717	19-30-4
2266 718	23-84-30
2266 719	19-30-4
2266 720	8-33-4
2266 721	8-33-6
2266 736	19-15-44
2266 737	19-15-35
2266 738	19-15-28
2266 783	6-50-10
2266 818	6-50-10
2266 831	22-01-43
2266 832	22-01-51
2266 834	22-01-42
2266 836	22-01-42
2266 876	5-64-2
2266 881	5-03-23
2266 890	5-13-22
2266 922	16-03-19
2266 923	16-03-19
2266 942	5-100-161
2267 041	5-03-5
2267 043	5-03-5
2267 044	5-03-23
2267 066	5-03-23
2267 072	22-05-14
2267 073	22-05-14
2267 080	22-03-1
2267 081	22-03-1
2267 083	22-04-2
2267 129	19-19-35
2267 139	19-15-4
	19-15-21
2267 160	19-01-8
2267 173	19-19-7
2267 235	19-58-14
2268 105	14-06-10
2268 106	14-08-37
2268 112	8-36-4
2268 113	8-36-4
2268 114	9-07-5
2268 117	14-06-10
2268 119	9-07-5
2268 122	8-36-4
2268 127	9-48-6
2268 188	14-06-10
2268 206	14-01-1
2268 212	9-67-4
2268 213	9-67-4
2268 216	9-64-24
2268 217	9-64-25
2268 220	9-64-24
2268 221	9-64-25
2268 222	7-03-1
2268 240	9-10-19
2268 241	9-02-9
2268 242	7-03-1
2268 250	9-48-6
2268 257	7-06-1
2268 258	7-06-1
2268 264	9-50-3
2268 282	9-48-44
2268 306	9-01-24
2268 308	9-01-24
2268 310	9-01-24
2268 312	9-01-24
2268 314	9-01-24
2268 316	9-01-24
2268 318	9-01-24
2268 320	14-30-1
2268 321	14-30-1
2268 322	14-30-1
2268 323	14-30-1
2268 324	14-30-1
2268 325	14-30-1
2268 327	14-39-45
2268 344	14-11-1
2268 346	14-11-39
2268 348	14-25-11
2268 349	14-25-11
2268 351	14-14-12
2268 356	14-11-9
2268 358	14-11-9
2268 367	14-13-5
2268 383	14-26-6
2268 385	14-11-9
2268 405	9-15-1
2268 420	14-13-1
2268 422	14-26-6
2268 441	9-03-5
2268 442	9-07-5
2268 446	10-24-4
2268 449	10-24-4
2268 459	10-24-4
2268 464	9-15-1
2268 513	10-24-38
2268 556	14-02-6
2268 557	14-02-27
2268 564	10-24-37
2268 593	9-03-4
2268 598	7-14-5
2268 614	7-14-5
2268 647	8-36-124
2268 677	14-24-4
2268 679	14-24-5
2268 767	14-30-1
2268 768	14-30-1
2268 870	10-26-18
2268 903	7-07-1
2268 908	21-117-2
2268 986	7-14-4
2268 990	9-15-1
2268 991	9-15-1
2269 072	10-07-14
2270 067	23-47-66
2270 102	23-76-28
2270 167	23-112-12
	23-112-18
2270 263	23-45-18
2270 579	23-45-30
2270 834	23-109-38
2270 983	23-52-6
2271 050	23-20-41
2271 232	23-108-4
2271 700	23-108-5
2271 701	23-108-5
2271 702	23-108-5
2271 703	23-108-4
2271 704	23-108-4
2271 705	23-108-4
2271 706	23-108-16
2271 707	23-108-16
2271 708	23-108-16
2271 709	23-108-16
2271 710	23-108-16
2271 711	23-108-16
2271 712	23-108-12
2271 713	23-108-12
2271 714	23-108-12
2271 715	23-108-12
2271 716	23-108-12
2271 717	23-108-12
2271 721	23-109-36
2271 722	23-109-36
2271 723	23-109-36
2271 724	23-109-35
2271 725	23-109-35
2271 726	23-109-35
2271 727	23-109-4
2271 728	23-109-4
2271 729	23-109-4
2271 730	23-109-3
2271 731	23-109-3
2271 733	23-108-5
2271 734	23-108-5
2271 735	23-108-5
2271 736	23-108-4
2271 737	23-108-4
2271 738	23-108-4
2271 739	23-108-16
2271 740	23-108-16
2271 741	23-108-16
2271 742	23-108-12
2271 743	23-108-12
2271 744	23-108-12
2271 750	23-108-5
2271 751	23-108-5
2271 752	23-108-5
2271 753	23-108-5
2271 754	23-108-5
2271 755	23-108-4
2271 756	23-108-4
2271 758	23-108-4
2271 759	23-108-4
2271 760	23-108-5
2271 761	23-108-5
2271 762	23-108-5
2271 763	23-108-5
2271 764	23-108-5
2271 765	23-108-4
2271 766	23-108-4
2271 767	23-108-4
2271 768	23-108-4
2271 769	23-108-4
2271 770	23-109-36
2271 771	23-109-36
2271 772	23-109-36
2271 773	23-109-36
2271 774	23-109-36

MyMopar.com

PART NUMBER	CODE
2271 775. .	23-109-35
2271 776. .	23-109-35
2271 777. .	23-109-35
2271 778. .	23-109-35
2271 779. .	23-109-35
2271 780. .	23-109-35
2271 781. .	23-109-35
2271 782. .	23-109-35
2271 783. .	23-109-35
2271 784. . .	23-63-14
	23-109-35
2271 785. .	23-108-16
2271 786. .	23-108-16
2271 787. .	23-108-16
2271 788. .	23-108-16
2271 789. .	23-108-16
2271 790. .	23-108-12
2271 791. .	23-108-12
2271 792. .	23-108-12
2271 793. .	23-108-12
2271 794. .	23-108-12
2271 800. . .	23-109-4
2271 801. . .	23-109-4
2271 802. . .	23-109-4
2271 803. . .	23-109-4
2271 804. . .	23-109-4
2271 805. . .	23-109-3
2271 806. . .	23-109-3
2271 807. . .	23-109-3
2271 808. . .	23-109-3
2271 809. . .	23-109-3
2271 837. . .	23-108-4
2271 838. . .	23-108-4
2271 839. . .	23-108-4
2271 840. .	23-108-16
2271 841. .	23-108-16
2271 842. .	23-108-16
2271 843. .	23-108-12
2271 844. .	23-108-12
2271 845. .	23-108-12
2271 851. .	23-109-36
2271 855. .	23-109-36
2271 856. .	23-109-36
2271 858. .	23-109-35
2271 859. .	23-109-35
2271 860. .	23-109-35
2271 861. . .	23-109-4
2271 862. . .	23-109-4
2271 863. . .	23-109-4
2271 864. . .	23-109-3
2271 874. .	23-108-16
2271 875. .	23-108-16
2271 876. .	23-108-16
2271 877. .	23-108-16
2271 878. .	23-108-16
2271 879. .	23-108-16
2271 880. .	23-108-16
2271 881. .	23-108-16
2271 882. .	23-108-16
2271 883. .	23-108-16
2271 884. .	23-108-12
2271 885. .	23-108-12
2271 886. .	23-108-12
2271 887. .	23-108-12
2271 888. .	23-108-12
2271 889. .	23-108-12
2271 890. .	23-108-12
2271 891. .	23-108-12
2271 892. .	23-108-12
2271 893. .	23-108-12
2271 900. . .	23-108-5
2271 901. . .	23-108-5
2271 902. . .	23-108-4
2271 903. . .	23-108-4
2271 904. .	23-108-16
2271 905. .	23-108-16
2271 906. .	23-108-12
2271 907. .	23-108-12
2271 910. .	23-109-36
2271 911. .	23-109-36
2271 912. .	23-109-35
2271 913. .	23-109-35
2271 914. .	23-109-35
2271 915. .	23-109-35
2271 916. . .	23-109-4
2271 917. . .	23-109-4
2271 918. . .	23-109-3
2271 919. . .	23-109-3
2271 928. .	23-108-17
2271 929. .	23-108-17
2271 931. . .	23-108-7
2271 932. . .	23-108-7
2271 937. . .	23-109-7
2271 938. . .	23-109-7
2271 940. .	23-109-40
2271 941. .	23-109-40
2271 944. .	23-108-17
2271 945. .	23-108-17
2271 946. .	23-108-17
2271 947. .	23-108-17
2271 950. . .	23-109-7
2271 951. . .	23-109-7
2271 953. .	23-109-40
2271 954. .	23-109-40
2271 956. .	23-109-36
2271 957. .	23-109-36
2271 958. .	23-109-36
2271 959. .	23-109-36
2271 960. .	23-109-35
2271 968. . .	23-109-4
2271 969. . .	23-109-4
2271 980. .	23-109-36
2271 981. .	23-109-36
2271 982. .	23-109-36
2271 983. .	23-109-36
2271 984. .	23-109-35
2271 985. .	23-109-35
2271 986. .	23-109-35
2271 987. .	23-109-35
2271 988. . .	23-109-4
2271 989. . .	23-109-4
2271 990. . .	23-109-4
2271 991. . .	23-109-4
2271 995. . .	23-76-34
2271 996. . .	23-76-34
2271 997. . .	23-76-34
2271 998. . .	23-76-34
2271 999. . .	23-76-34
2272 026. . .	23-91-6
2272 027. . .	23-91-6
2272 038. . .	23-101-3
2272 039. . .	23-101-3
2272 046. . .	23-101-3
2272 047. . .	23-101-3
2272 050. . .	23-84-3
2272 051. . .	23-84-3
2272 052. . .	23-84-3
2272 053. . .	23-84-3
2272 054. . .	23-84-3
2272 060. . .	23-99-38
2272 061. . .	23-99-38
2272 064. . .	23-102-3
2272 071. . .	23-84-3
2272 102. . .	23-103-3
2272 103. . .	23-103-3
2272 104. . .	23-103-3
2272 106. . .	23-96-8
2272 107. . .	23-96-8
2272 108. . .	23-96-8
2272 109. . .	23-96-8
2272 112. . .	23-96-8
2272 113. . .	23-96-8
2272 130. . .	23-79-33
2272 131. . .	23-79-33
2272 132. . .	23-79-33
2272 133. . .	23-79-33
2272 144. . .	23-84-3
2272 145. . .	23-84-3
2272 146. . .	23-84-3
2272 147. . .	23-84-3
2272 148. . .	23-84-3
2272 149. . .	23-84-3
2272 150. . .	23-84-3
2272 153. .	23-113-50
2272 168. . .	23-92-5
2272 169. . .	23-92-5
2272 170. . .	23-92-5
2272 171. . .	23-92-5
2272 174. . .	23-92-5
2272 175. . .	23-92-5
2272 178. . .	23-92-5
2272 179. . .	23-92-5
2272 180. . .	23-92-5
2272 181. . .	23-92-5
2272 182. . .	23-92-5
2272 183. . .	23-92-5
2272 184. . .	23-92-5
2272 185. . .	23-92-5
2272 194. . .	23-92-5
2272 195. . .	23-92-5
2272 196. . .	23-92-5
2272 197. . .	23-92-5
2272 198. . .	23-92-5
2272 199. . .	23-92-5
2272 200. . .	23-92-5
2272 201. . .	23-92-5
2272 202. . .	23-92-5
2272 203. . .	23-92-5
2272 206. . .	23-109-4
2272 208. . .	23-91-6
2272 209. . .	23-91-6
2272 210. . .	23-91-6
2272 211. . .	23-91-6
2272 212. . .	23-91-6
2272 213. . .	23-91-6
2272 214. . .	23-91-6
2272 215. . .	23-91-6
2272 216. . .	23-91-6
2272 217. . .	23-91-6
2272 230. . .	23-92-5
2272 231. . .	23-92-5
2272 232. . .	23-92-5
2272 233. . .	23-92-5
2272 234. . .	23-92-5
2272 235. . .	23-92-5
2272 236. . .	23-92-5
2272 237. . .	23-92-5
2272 238. . .	23-92-5
2272 239. . .	23-92-5
2272 256. . .	23-92-5
2272 257. . .	23-92-5
2272 258. . .	23-92-5
2272 259. . .	23-92-5
2272 260. . .	23-92-5
2272 261. . .	23-92-5
2272 262. . .	23-92-5
2272 263. . .	23-92-5
2272 266. . .	23-101-3
2272 267. . .	23-101-3
2272 268. . .	23-101-3
2272 269. . .	23-101-3
2272 270. . .	23-101-3
2272 271. . .	23-101-3
2272 272. . .	23-101-3
2272 273. . .	23-101-3
2272 276. . .	23-101-3
2272 277. . .	23-101-3
2272 278. . .	23-101-3
2272 279. . .	23-101-3
2272 280. . .	23-101-3
2272 281. . .	23-101-3
2272 282. . .	23-101-3
2272 283. . .	23-101-3
2272 292. . .	23-92-5
2272 293. . .	23-92-5
2272 294. . .	23-92-5
2272 295. . .	23-92-5
2272 296. . .	23-92-5
2272 297. . .	23-92-5
2272 298. . .	23-92-5
2272 299. . .	23-92-5
2272 300. . .	23-92-5
2272 301. . .	23-92-5
2272 302. . .	23-92-5
2272 303. . .	23-92-5
2272 306. . .	23-92-5
2272 307. . .	23-92-5
2272 308. . .	23-92-5
2272 309. . .	23-92-5
2272 310. . .	23-92-5
2272 311. . .	23-92-5
2272 320. . .	23-92-5
2272 321. . .	23-92-5
2272 322. . .	23-92-5
2272 323. . .	23-92-5
2272 324. . .	23-92-5
2272 325. . .	23-92-5
2272 328. . .	23-92-5
2272 329. . .	23-92-5
2272 330. . .	23-92-5
2272 331. . .	23-92-5
2272 332. . .	23-92-5
2272 333. . .	23-92-5
2272 334. . .	23-92-5
2272 335. . .	23-92-5
2272 336. . .	23-101-3
2272 337. . .	23-101-3
2272 338. . .	23-101-3
2272 339. . .	23-101-3
2272 340. . .	23-102-3
2272 341. . .	23-101-3
2272 342. . .	23-101-3
2272 343. . .	23-101-3
2272 344. . .	23-101-3
2272 345. . .	23-101-3
2272 346. . .	23-101-3
2272 347. . .	23-101-3
2272 348. . .	23-101-3
2272 349. . .	23-101-3
2272 350. . .	23-101-3
2272 351. . .	23-101-3
2272 356. . .	23-92-5
2272 357. . .	23-92-5
2272 358. . .	23-92-5
2272 359. . .	23-92-5
2272 360. . .	23-92-5
2272 361. . .	23-92-5
2272 362. . .	23-92-5
2272 363. . .	23-92-5
2272 364. . .	23-92-5
2272 365. . .	23-92-5
2272 366. . .	23-92-5
2272 367. . .	23-92-5
2272 372. . .	23-92-5
2272 373. . .	23-92-5
2272 374. . .	23-92-5

MyMopar.com

PART NUMBER	CODE
2272 375. . .	23-92-5
2272 376. . .	23-92-5
2272 377. . .	23-92-5
2272 378. . .	23-101-3
2272 379. . .	23-101-3
2272 380. . .	23-101-3
2272 381. . .	23-101-3
2272 382. . .	23-101-3
2272 383. . .	23-101-3
2272 387. . .	23-101-3
2272 394. . .	23-109-5
2272 395. . .	23-109-5
2272 396. . .	23-109-5
2272 397. . .	23-109-5
2272 398. . .	23-109-5
2272 399. . .	23-109-5
2272 400. . .	23-109-5
2272 401. . .	23-109-5
2272 402. . .	23-109-5
2272 403. . .	23-109-5
2272 404. . .	23-109-5
2272 405. . .	23-109-5
2272 406. . .	23-79-33
2272 407. . .	23-79-33
2272 408. . .	23-79-33
2272 409. . .	23-79-33
2272 410. . .	23-79-33
2272 411. . .	23-79-33
2272 413. . .	23-79-33
2272 414. . .	23-79-33
2272 415. . .	23-79-33
2272 416. . .	23-79-33
2272 417. . .	23-79-33
2272 440. . .	23-92-5
2272 441. . .	23-92-5
2272 442. . .	23-92-5
2272 443. . .	23-92-5
2272 444. . .	23-92-5
2272 445. . .	23-92-5
2272 448. . .	23-92-5
2272 449. . .	23-92-5
2272 450. . .	23-92-5
2272 451. . .	23-92-5
2272 454. . .	23-92-5
2272 455. . .	23-92-5
2272 456. . .	23-92-5
2272 457. . .	23-92-5
2272 460. . .	23-92-5
2272 461. . .	23-92-5
2272 462. . .	23-92-5
2272 463. . .	23-92-5
2272 464. . .	23-92-5
2272 465. . .	23-92-5
2272 466. . .	23-92-5
2272 467. . .	23-92-5
2272 476. . .	23-108-84
2272 477. . .	23-108-84
2272 478. . .	23-108-84
2272 479. . .	23-108-84
2272 480. . .	23-108-84
2272 481. . .	23-108-84
2272 482. . .	23-108-84
2272 483. . .	23-108-84
2272 484. . .	23-108-84
2272 485. . .	23-108-84
2272 488. . .	23-101-3
2272 489. . .	23-101-3
2272 490. . .	23-92-5
2272 491. . .	23-92-5
2272 616. . .	23-108-4
2272 618. . .	23-108-12
2272 619. . .	23-108-12
2272 672. . .	23-108-5
2272 673. . .	23-108-4
2272 674. . .	23-108-4
2272 675. . .	23-108-16
2272 676. . .	23-108-12
2272 677. . .	23-108-12
2272 680. . .	23-109-36
2272 681. . .	23-109-35
2272 682. . .	23-109-35
2272 683. . .	23-109-4
2272 684. . .	23-109-3
2272 685. . .	23-109-3
2272 690. . .	23-108-5
2272 691. . .	23-108-4
2272 692. . .	23-108-4
2272 693. . .	23-108-16
2272 694. . .	23-108-16
2272 695. . .	23-108-12
2272 696. . .	23-108-12
2272 699. . .	23-108-5
2272 700. . .	23-108-4
2272 701. . .	23-108-4
2272 702. . .	23-108-16
2272 703. . .	23-108-12
2272 704. . .	23-108-12
2272 707. . .	23-109-36
2272 708. . .	23-109-35
2272 709. . .	23-109-4
2272 710. . .	23-108-15
	23-109-3
2272 711. . .	23-108-12
2272 712. . .	23-108-12
2272 713. . .	23-108-5
2272 715. . .	23-108-5
2272 716. . .	23-108-4
2272 718. . .	23-108-4
2272 719. . .	23-108-16
2272 721. . .	23-108-16
2272 722. . .	23-108-12
2272 724. . .	23-108-12
2272 728. . .	23-109-36
2272 730. . .	23-109-36
2272 731. . .	23-109-35
2272 733. . .	23-109-35
2272 734. . .	23-109-4
2272 736. . .	23-109-4
2272 737. . .	23-109-3
2272 739. . .	23-109-3
2272 740. . .	23-109-4
2272 742. . .	23-109-4
2272 743. . .	23-108-15
	23-109-3
2272 745. . .	23-108-15
	23-109-3
2272 746. . .	23-109-36
2272 748. . .	23-109-36
2272 749. . .	23-109-35
2272 751. . .	23-109-35
2272 752. . .	23-108-5
2272 754. . .	23-108-5
2272 755. . .	23-108-4
2272 757. . .	23-108-4
2272 758. . .	23-108-16
2272 759. . .	23-108-16
2272 762. . .	23-108-16
2272 763. . .	23-108-16
2272 773. . .	23-108-16
2272 774. . .	23-108-16
2272 775. . .	23-108-16
2272 776. . .	23-108-16
2272 777. . .	23-108-16
2272 778. . .	23-108-16
2272 779. . .	23-108-16
2272 780. . .	23-108-16
2272 781. . .	23-108-12
2272 782. . .	23-108-12
2272 783. . .	23-108-12
2272 784. . .	23-108-12
2272 785. . .	23-108-12
2272 786. . .	23-108-12
2272 787. . .	23-108-12
2272 788. . .	23-108-12
2272 789. . .	23-108-12
2272 790. . .	23-108-12
2272 791. . .	23-108-12
2272 792. . .	23-108-12
2272 793. . .	23-108-12
2272 794. . .	23-108-12
2272 795. . .	23-108-12
2272 796. . .	23-108-12
2272 844. . .	23-108-5
2272 845. . .	23-108-5
2272 846. . .	23-108-4
2272 847. . .	23-108-4
2272 850. . .	23-108-16
2272 851. . .	23-108-16
2272 852. . .	23-108-12
2272 853. . .	23-108-12
2272 858. . .	23-108-36
2272 859. . .	23-109-36
2272 860. . .	23-109-35
2272 861. . .	23-109-35
2272 864. . .	23-109-4
2272 865. . .	23-109-4
2272 866. . .	23-109-3
2272 867. . .	23-109-3
2272 871. . .	23-108-5
2272 872. . .	23-108-5
2272 873. . .	23-108-5
2272 874. . .	23-108-5
2272 875. . .	23-108-5
2272 876. . .	23-108-4
2272 877. . .	23-108-4
2272 878. . .	23-108-4
2272 879. . .	23-108-4
2272 880. . .	23-108-4
2272 881. . .	23-108-4
2272 882. . .	23-108-4
2272 883. . .	23-108-4
2272 884. . .	23-108-4
2272 885. . .	23-108-4
2272 891. . .	23-108-16
2272 892. . .	23-108-16
2272 893. . .	23-108-16
2272 894. . .	23-108-16
2272 895. . .	23-108-16
2272 896. . .	23-108-12
2272 897. . .	23-108-12
2272 898. . .	23-108-12
2272 899. . .	23-108-12
2272 900. . .	23-108-12
2272 921. . .	23-109-36
2272 922. . .	23-109-36
2272 923. . .	23-109-36
2272 924. . .	23-109-36
2272 925. . .	23-109-36
2272 926. . .	23-109-35
2272 927. . .	23-109-35
2272 928. . .	23-109-35
2272 929. . .	23-109-35
2272 930. . .	23-109-35
2272 931. . .	23-109-35
2272 932. . .	23-109-35
2272 933. . .	23-109-35
2272 934. . .	23-109-35
2272 935. . .	23-109-35
2272 941. . .	23-109-4
2272 942. . .	23-109-4
2272 943. . .	23-109-4
2272 944. . .	23-109-4
2272 945. . .	23-109-4
2272 946. . .	23-109-3
2272 947. . .	23-109-3
2272 948. . .	23-109-3
2272 949. . .	23-109-3
2272 950. . .	23-109-3
2272 956. . .	23-108-5
2272 957. . .	23-108-5
2272 958. . .	23-108-5
2272 959. . .	23-108-5
2272 960. . .	23-108-5
2272 961. . .	23-108-4
2272 962. . .	23-108-4
2272 963. . .	23-108-4
2272 964. . .	23-108-4
2272 965. . .	23-108-4
2272 966. . .	23-108-4
2272 967. . .	23-108-4
2272 968. . .	23-108-4
2272 969. . .	23-108-4
2272 970. . .	23-108-4
2272 971. . .	23-108-16
2272 972. . .	23-108-16
2272 973. . .	23-108-16
2272 974. . .	23-108-16
2272 975. . .	23-108-16
2272 976. . .	23-108-16
2272 977. . .	23-108-16
2272 978. . .	23-108-16
2272 979. . .	23-108-16
2272 980. . .	23-108-16
2272 981. . .	23-108-12
2272 982. . .	23-108-12
2272 983. . .	23-108-12
2272 984. . .	23-108-12
2272 985. . .	23-108-12
2272 986. . .	23-108-12
2272 987. . .	23-108-12
2272 988. . .	23-108-12
2272 989. . .	23-108-12
2272 990. . .	23-108-12
2273 000. . .	23-76-3
	23-76-59
	23-76-66
2273 001. . .	23-76-3
	23-76-59
	23-76-66
2273 002. . .	23-76-3
	23-76-59
	23-76-66
2273 003. . .	23-76-3
	23-76-59
	23-76-66
2273 004. . .	23-76-3
	23-76-59
	23-76-66
2273 006. . .	23-76-3
	23-76-59
2273 007. . .	23-76-3
	23-76-59
2273 008. . .	23-76-3
	23-76-59
2273 009. . .	23-76-3
	23-76-59
2273 010. . .	23-76-3
	23-76-59
2273 011. . .	23-76-3
	23-76-59
2273 012. . .	23-76-3
	23-76-59
2273 013. . .	23-76-3
	23-76-59
2273 014. . .	23-76-3
	23-76-59
2273 015. . .	23-76-3
	23-76-59
2273 040. . .	23-33-42

MyMopar.com

PART NUMBER	CODE
2273 041. . .	23-33-42
2273 042. . .	23-33-42
2273 043. . .	23-33-42
2273 044. . .	23-33-42
2273 045. . .	23-79-79
2273 046. . .	23-79-79
2273 047. . .	23-79-79
2273 048. . .	23-79-79
2273 053. . .	23-84-3
2273 054. . .	23-84-3
2273 055. . .	23-84-3
2273 056. . .	23-84-3
2273 057. . .	23-84-3
2273 058. . .	23-20-8
2273 060. . .	23-20-8
2273 061. . .	23-20-8
2273 062. . .	23-20-8
2273 063. . .	23-79-3
2273 064. . .	23-79-3
2273 065. . .	23-79-3
2273 066. . .	23-79-3
2273 071. . .	23-20-11
2273 073. . .	23-20-11
2273 074. . .	23-20-11
2273 075. . .	23-20-41
2273 076. . .	23-79-33
2273 077. . .	23-79-33
2273 078. . .	23-79-33
2273 079. . .	23-79-33
2273 094. . .	23-92-5
2273 095. . .	23-92-5
2273 098. . .	23-92-5
2273 099. . .	23-92-5
2273 100. . .	23-101-3
2273 101. . .	23-101-3
2273 102. . .	23-101-3
2273 103. . .	23-101-3
2273 104. . .	23-101-3
2273 105. . .	23-101-3
2273 110. . .	23-92-5
2273 111. . .	23-92-5
2273 112. . .	23-92-5
2273 113. . .	23-92-5
2273 114. . .	23-92-5
2273 115. . .	23-92-5
2273 116. . .	23-92-5
2273 117. . .	23-92-5
2273 118. . .	23-92-5
2273 119. . .	23-92-5
2273 120. . .	23-92-5
2273 121. . .	23-92-5
2273 126. . .	23-92-5
2273 127. . .	23-92-5
2273 128. . .	23-92-5
2273 129. . .	23-92-5
2273 130. . .	23-92-5
2273 131. . .	23-92-5
2273 132. . .	23-92-5
2273 133. . .	23-92-5
2273 146. . .	23-92-5
2273 147. . .	23-92-5
2273 150. . .	23-92-5
2273 151. . .	23-92-5
2273 152. . .	23-92-5
2273 153. . .	23-92-5
2273 166. . .	23-92-5
2273 167. . .	23-92-5
2273 168. . .	23-92-5
2273 169. . .	23-92-5
2273 170. . .	23-92-5
2273 171. . .	23-92-5
2273 172. . .	23-92-5
2273 173. . .	23-92-5
2273 174. . .	23-92-5
2273 175. . .	23-92-5
2273 176. . .	23-92-5
2273 177. . .	23-92-5
2273 178. . .	23-92-5
2273 179. . .	23-92-5
2273 180. . .	23-92-5
2273 181. . .	23-92-5
2273 188. . .	23-92-5
2273 189. . .	23-92-5
2273 190. . .	23-92-5
2273 191. . .	23-92-5
2273 192. . .	23-92-5
2273 193. . .	23-92-5
2273 194. . .	23-92-5
2273 195. . .	23-92-5
2273 196. . .	23-92-5
2273 197. . .	23-92-5
2273 198. . .	23-101-3
2273 199. . .	23-101-3
2273 200. . .	23-101-3
2273 201. . .	23-101-3
2273 202. . .	23-101-3
2273 203. . .	23-101-3
2273 204. . .	23-101-3
2273 205. . .	23-101-3
2273 206. . .	23-101-3
2273 207. . .	23-101-3
2273 212. . .	23-101-3
2273 213. . .	23-101-3
2273 214. . .	23-101-3
2273 215. . .	23-101-3
2273 216. . .	23-101-3
2273 217. . .	23-101-3
2273 218. . .	23-101-3
2273 219. . .	23-101-3
2273 226. . .	23-92-5
2273 227. . .	23-92-5
2273 228. . .	23-92-5
2273 229. . .	23-92-5
2273 230. . .	23-92-5
2273 231. . .	23-92-5
2273 232. . .	23-92-5
2273 233. . .	23-92-5
2273 234. . .	23-92-5
2273 235. . .	23-92-5
2273 236. . .	23-92-5
2273 237. . .	23-92-5
2273 238. . .	23-92-5
2273 239. . .	23-92-5
2273 240. . .	23-92-5
2273 241. . .	23-92-5
2273 242. . .	23-92-5
2273 243. . .	23-92-5
2273 244. . .	23-92-5
2273 245. . .	23-92-5
2273 252. . .	23-92-5
2273 253. . .	23-92-5
2273 256. . .	23-92-5
2273 257. . .	23-92-5
2273 258. . .	23-92-5
2273 259. . .	23-92-5
2273 260. . .	23-92-5
2273 261. . .	23-92-5
2273 262. . .	23-92-5
2273 263. . .	23-92-5
2273 264. . .	23-92-5
2273 265. . .	23-92-5
2273 266. . .	23-92-5
2273 267. . .	23-92-5
2273 268. . .	23-92-5
2273 269. . .	23-92-5
2273 270. . .	23-92-5
2273 271. . .	23-92-5
2273 278. . .	23-103-3
2273 279. . .	23-103-3
2273 280. . .	23-103-3
2273 281. . .	23-103-3
2273 282. . .	23-103-3
2273 283. . .	23-103-3
2273 284. . .	23-103-3
2273 285. . .	23-103-3
2273 286. . .	23-103-3
2273 317. . .	23-33-132
2273 318. . .	23-33-132
2273 319. . .	23-33-132
2273 320. . .	23-33-132
2273 321. . .	23-33-132
2273 328. . .	23-22-78
2273 329. . .	23-22-78
2273 338. . .	23-101-14
2273 339. . .	23-101-14
2273 348. . .	23-96-8
2273 349. . .	23-96-8
2273 358. . .	23-92-5 23-96-8
2273 359. . .	23-92-5 23-96-8
2273 411. . .	23-70-41
2273 422. . .	23-99-4
2273 423. . .	23-99-4
2273 435. . .	23-112-46
2273 445. . .	23-33-129
2273 446. . .	23-33-129
2273 449. . .	23-33-129
2273 455. . .	1-32-2 23-103-3
2273 461. . .	23-86-3
2273 462. . .	23-86-3
2273 463. . .	23-86-3
2273 464. . .	23-86-3
2273 465. . .	23-86-3
2273 466. . .	23-86-3
2273 467. . .	23-86-3
2273 476. . .	23-96-8
2273 477. . .	23-96-8
2273 482. . .	23-92-5
2273 483. . .	23-92-5
2273 484. . .	23-101-3
2273 485. . .	23-101-3
2273 486. . .	23-92-5
2273 487. . .	23-92-5
2273 488. . .	23-92-5
2273 489. . .	23-92-5
2273 496. . .	23-112-153
2273 497. . .	23-112-153
2273 554. . .	23-108-5
2273 555. . .	23-108-5
2273 557. . .	23-108-4
2273 558. . .	23-108-4
2273 564. . .	23-108-16
2273 565. . .	23-108-16
2273 566. . .	23-108-16
2273 567. . .	23-108-16
2273 570. . .	23-108-12
2273 571. . .	23-108-12
2273 572. . .	23-108-12
2273 573. . .	23-108-12
2273 576. . .	23-108-5
2273 577. . .	23-108-5
2273 579. . .	23-108-4
2273 580. . .	23-108-4
2273 585. . .	23-108-16
2273 586. . .	23-108-16
2273 588. . .	23-108-12
2273 589. . .	23-108-12
2273 597. . .	23-109-36
2273 598. . .	23-109-36
2273 600. . .	23-109-35
2273 601. . .	23-109-35
2273 603. . .	23-109-4
2273 604. . .	23-109-4
2273 606. . .	23-109-3
2273 607. . .	23-109-3
2273 609. . .	23-109-36
2273 610. . .	23-109-36
2273 612. . .	23-109-35
2273 613. . .	23-109-35
2273 618. . .	23-109-4
2273 619. . .	23-109-4
2273 621. . .	23-109-3
2273 622. . .	23-109-3
2273 652. . .	23-108-4
2273 653. . .	23-108-12
2273 655. . .	23-109-35
2273 656. . .	23-109-3
2273 663. . .	23-109-36
2273 664. . .	23-109-36
2273 665. . .	23-109-36
2273 666. . .	23-109-36
2273 667. . .	23-109-36
2273 668. . .	23-109-35
2273 669. . .	23-109-35
2273 670. . .	23-109-35
2273 671. . .	23-109-35
2273 672. . .	23-109-35
2273 673. . .	23-109-35
2273 674. . .	23-109-35
2273 675. . .	23-109-35
2273 676. . .	23-109-35
2273 677. . .	23-109-35
2273 678. . .	23-109-4
2273 679. . .	23-109-4
2273 680. . .	23-109-4
2273 681. . .	23-109-4
2273 682. . .	23-109-4
2273 683. . .	23-109-3
2273 684. . .	23-109-3
2273 685. . .	23-109-3
2273 686. . .	23-109-3
2273 687. . .	23-109-3
2273 690. . .	23-109-35
2273 691. . .	23-109-35
2273 692. . .	23-109-35
2273 693. . .	23-109-35
2273 694. . .	23-109-35
2273 700. . .	23-109-3
2273 701. . .	23-109-3
2273 702. . .	23-109-3
2273 703. . .	23-109-3
2273 705. . .	23-108-5
2273 706. . .	23-108-5
2273 707. . .	23-108-5
2273 708. . .	23-108-5
2273 709. . .	23-108-5
2273 710. . .	23-108-4
2273 711. . .	23-108-4
2273 712. . .	23-108-4
2273 713. . .	23-108-4
2273 714. . .	23-108-4
2273 715. . .	23-108-4
2273 716. . .	23-108-4
2273 717. . .	23-108-4
2273 718. . .	23-108-4
2273 719. . .	23-108-4
2273 720. . .	23-108-16
2273 721. . .	23-108-16
2273 722. . .	23-108-16
2273 723. . .	23-108-16
2273 724. . .	23-108-16
2273 725. . .	23-108-16
2273 726. . .	23-108-16
2273 727. . .	23-108-16
2273 728. . .	23-108-16

MyMopar.com

PART NUMBER	CODE	PART NUMBER	CODE	PART NUMBER	CODE	PART NUMBER	CODE	PART NUMBER	CODE
2273 729. .	23-108-16	2274 155. . .	23-86-3	2274 280. .	23-109-36	2274 713. . .	23-86-3	2274 935. . .	23-92-5
2273 730. .	23-108-12	2274 156. . .	23-86-3	2274 281. .	23-109-35	2274 714. . .	23-86-3	2274 936. . .	23-92-5
2273 731. .	23-108-12	2274 157. . .	23-86-3	2274 282. . .	23-109-4	2274 715. . .	23-86-3	2274 937. . .	23-92-5
2273 732. .	23-108-12	2274 158. . .	23-86-3	2274 283. . .	23-109-3	2274 716. . .	23-86-3	2274 938. . .	23-92-5
2273 733. .	23-108-12	2274 163. . .	23-86-3	2274 284. . .	23-108-5	2274 717. . .	23-86-3	2274 939. . .	23-92-5
2273 734. .	23-108-12	2274 164. . .	23-86-3	2274 285. . .	23-108-5	2274 718. . .	23-96-8	2274 940. . .	23-101-3
2273 735. .	23-108-12	2274 167. .	23-109-36	2274 286. . .	23-108-5	2274 719. . .	23-96-8	2274 941. . .	23-101-3
2273 736. .	23-108-12	2274 168. .	23-109-36	2274 287. . .	23-108-4	2274 744. . .	23-76-18	2274 942. . .	23-92-5
2273 737. .	23-108-12	2274 169. .	23-109-36	2274 288. . .	23-108-4	2274 766. . .	23-101-3	2274 943. . .	23-92-5
2273 738. .	23-108-12	2274 170. .	23-109-36	2274 289. . .	23-108-4	2274 767. . .	23-101-3	2274 944. . .	23-92-5
2273 739. .	23-108-12	2274 177. . .	23-109-4	2274 290. . .	23-108-4	2274 768. . .	23-101-3	2274 945. . .	23-92-5
2273 740. . .	23-76-18	2274 191. .	23-109-36	2274 291. . .	23-108-4	2274 769. . .	23-101-3	2274 946. . .	23-92-5
2273 741. . .	23-76-18	2274 192. .	23-109-36	2274 292. . .	23-108-4	2274 770. . .	23-92-5	2274 947. . .	23-92-5
2273 742. . .	23-78-18	2274 193. .	23-109-36	2274 293. .	23-108-16	2274 771. . .	23-92-5	2274 950. . .	23-84-3
2273 743. . .	23-76-18	2274 194. .	23-109-36	2274 294. .	23-108-16	2274 772. . .	23-92-5	2274 970. . .	23-101-3
2273 755. .	23-109-36	2274 195. .	23-109-35	2274 295. .	23-108-16	2274 773. . .	23-92-5	2274 971. . .	23-101-3
2273 756. .	23-109-36	2274 196. .	23-109-35	2274 296. .	23-108-12	2274 774. . .	23-92-5	2274 972. . .	23-101-3
2273 757. .	23-109-36	2274 197. .	23-109-35	2274 297. .	23-108-12	2274 775. . .	23-92-5	2274 973. . .	23-101-3
2273 758. .	23-109-36	2274 198. .	23-109-35	2274 298. .	23-108-12	2274 816. . .	23-96-8	2274 974. . .	23-101-3
2273 759. .	23-109-36	2274 203. . .	23-109-4	2274 299. .	23-108-12	2274 817. . .	23-96-8	2274 975. . .	23-101-3
2273 760. .	23-109-35	2274 204. . .	23-109-4	2274 300. .	23-108-12	2274 818. . .	23-92-5	2274 976. . .	23-101-3
2273 761. .	23-109-35	2274 205. . .	23-109-4	2274 301. .	23-108-12	2274 819. . .	23-92-5	2274 977. . .	23-101-3
2273 762. .	23-109-35	2274 207. . .	23-109-3	2274 308. .	23-109-36	2274 820. . .	23-92-5	2274 978. . .	23-92-5
2273 763. .	23-109-35	2274 208. . .	23-109-3	2274 309. .	23-109-36	2274 821. . .	23-92-5	2274 979. . .	23-92-5
2273 764. .	23-109-35	2274 209. . .	23-109-3	2274 310. .	23-109-36	2274 832. . .	23-79-33	2274 980. . .	23-92-5
2273 765. . .	23-109-4	2274 210. . .	23-109-3	2274 311. .	23-109-35	2274 840. . .	23-103-3	2274 981. . .	23-92-5
2273 766. . .	23-109-4	2274 215. .	23-109-36	2274 312. .	23-109-35	2274 841. . .	23-77-3	2274 982. . .	23-92-5
2273 767. . .	23-109-4	2274 216. .	23-109-36	2274 313. .	23-109-35	2274 843. . .	23-84-3	2274 983. . .	23-92-5
2273 768. . .	23-109-4	2274 217. .	23-109-36	2274 316. . .	23-109-4	2274 865. . .	23-20-8	2274 984. . .	23-92-5
2273 769. . .	23-109-4	2274 218. .	23-109-36	2274 324. . .	23-108-5	2274 866. . .	23-20-8	2274 985. . .	23-92-5
2273 770. . .	23-109-3	2274 219. .	23-109-36	2274 325. . .	23-108-4	2274 867. . .	23-20-29	2274 998. . .	23-103-3
2273 771. . .	23-109-3	2274 230. . .	23-109-4	2274 326. .	23-108-16	2274 869. . .	23-79-3	2275 015. . . .	1-76-1
2273 772. . .	23-109-3	2274 231. . .	23-109-4	2274 327. .	23-108-12	2274 870. . .	23-79-3		23-21-3
2273 773. . .	23-109-3	2274 232. . .	23-109-4	2274 329. .	23-109-36	2274 871. . .	23-79-3	2275 020. . . .	1-76-1
2273 774. . .	23-109-3	2274 233. . .	23-109-4	2274 330. .	23-109-35	2274 872. . .	23-79-3		23-21-3
2273 776. .	23-109-36	2274 234. . .	23-109-4	2274 331. . .	23-109-4	2274 873. . .	23-79-3	2275 142. . .	23-41-34
2273 777. .	23-109-36	2274 245. .	23-109-36	2274 332. . .	23-109-3	2274 878. . .	23-92-5	2275 143. . .	23-41-34
2273 778. .	23-109-36	2274 246. .	23-109-36	2274 333. . .	23-86-3		23-96-8	2275 200. . . .	8-01-9
2273 779. .	23-109-36	2274 247. .	23-109-36	2274 335. . .	23-86-3	2274 879. . .	23-92-5	2275 202. .	24-25-132
2273 788. . .	23-109-4	2274 248. .	23-109-36	2274 338. . .	23-108-5		23-96-8	2275 203. . .	24-25-3
2273 795. .	23-109-36	2274 249. .	23-109-36	2274 339. . .	23-108-4	2274 882. . .	23-86-3	2275 204. . .	24-25-93
2273 796. .	23-109-36	2274 250. .	23-109-35	2274 342. .	23-108-16	2274 883. . .	23-86-3	2275 205. . .	24-25-93
2273 797. .	23-109-36	2274 251. .	23-109-35	2274 343. .	23-108-12	2274 884. . .	23-86-3	2275 206. .	24-25-154
2273 798. .	23-109-36	2274 252. .	23-109-35	2274 346. .	23-109-36	2274 885. . .	23-86-3	2275 207. . .	24-25-2
2273 799. .	23-109-36	2274 253. .	23-109-35	2274 347. .	23-109-35	2274 886. . .	23-86-3	2275 211. . .	8-50-334
2273 800. .	23-109-35	2274 254. .	23-109-35	2274 350. . .	23-109-4	2274 887. . .	23-86-3	2275 212. . .	8-50-334
2273 801. .	23-109-35	2274 260. . .	23-109-4	2274 351. . .	23-109-3	2274 888. . .	23-86-3	2275 215. . .	24-28-64
2273 802. .	23-109-35	2274 261. . .	23-109-4	2274 353. .	23-109-36	2274 899. . .	23-63-33	2275 220. . . .	8-16-3
2273 803. .	23-109-35	2274 262. . .	23-109-4	2274 354. .	23-109-35	2274 900. . .	23-63-33	2275 227. . .	8-27-279
2273 804. .	23-109-35	2274 263. . .	23-109-4	2274 357. . .	23-109-4	2274 901. . .	23-63-33	2275 228. . .	8-27-133
2273 805. . .	23-109-4	2274 264. . .	23-109-4	2274 358. .	23-108-15	2274 902. . .	23-63-33	2275 229. . .	8-27-133
2273 806. . .	23-109-4	2274 265. . .	23-109-3		23-109-3	2274 903. . .	23-63-33	2275 242. . . .	8-15-7
2273 807. . .	23-109-4	2274 266. . .	23-109-3	2274 359. . .	23-108-5	2274 904. . .	23-63-33	2275 243. . .	8-37-371
2273 808. . .	23-109-4	2274 267. . .	23-109-3	2274 360. . .	23-108-4	2274 928. . .	23-101-3	2275 244. . .	8-37-371
2273 809. . .	23-109-4	2274 268. . .	23-109-3	2274 364. .	23-108-16	2274 929. . .	23-101-3	2275 246. . . .	8-56-8
2273 810. . .	23-109-3	2274 269. . .	23-109-3	2274 365. .	23-108-16	2274 930. . .	23-101-3	2275 247. . .	8-55-194
2273 811. . .	23-109-3	2274 275. . .	23-108-5	2274 647. . .	23-103-3	2274 931. . .	23-101-3	2275 248. . .	8-52-214
2273 812. . .	23-109-3	2274 276. . .	23-108-4	2274 710. . .	23-86-3	2274 932. . .	23-101-3	2275 251. . .	14-30-4
2273 813. . .	23-109-3	2274 277. .	23-108-16	2274 711. . .	23-86-3	2274 933. . .	23-101-3	2275 255. . .	14-30-7
2273 814. . .	23-109-3	2274 278. .	23-108-12	2274 712. . .	23-86-3	2274 934. . .	23-92-5	2275 345. . .	23-21-3

MyMopar.com

PART NUMBER	CODE
2275 365	9-11-1
2275 368	5-39-3
2275 369	5-39-3
2275 381	9-09-2
2275 382	9-09-2
2275 383	9-09-2
2275 384	9-09-2
2275 385	9-09-2
2275 386	9-09-2
2275 387	9-09-2
2275 388	9-09-2
2275 389	9-09-2
2275 390	9-09-2
2275 391	9-09-2
2275 392	9-09-2
2275 393	9-09-2
2275 394	9-09-2
2275 395	9-09-2
2275 396	9-09-2
2275 397	9-09-2
2275 398	9-09-2
2275 411	9-32-2
2275 412	9-32-2
2275 422	21-01-3
2275 433	22-03-1
2275 434	22-03-1
2275 438	8-36-1
2275 439	9-35-1
2275 440	9-35-1
2275 441	9-35-1
2275 446	9-10-5
2275 450	13-72-4
2275 452	9-35-1
2275 453	9-35-1
2275 454	9-35-1
2275 462	2-10-55
2275 463	2-10-55
2275 464	2-10-55
2275 465	2-10-55
2275 496	21-118-6
2275 497	21-118-6
2275 498	21-138-2
2275 499	21-01-3
2275 508	2-14-3
2275 509	2-14-3
2275 510	2-14-3
2275 511	2-14-3
2275 514	16-07-4
2275 516	5-39-1
2275 517	5-39-1
2275 518	5-39-1
2275 519	5-39-3
2275 523	21-139-189
2275 535	5-63-1
2275 536	5-63-1
2275 539	5-63-3
2275 540	5-63-3
2275 543	17-16-1
2275 550	8-52-137
2275 553	8-52-342
2275 554	8-52-345
2275 555	8-52-121
2275 556	8-52-87
2275 557	8-52-96
2275 558	8-52-98
2275 565	23-67-160
2275 573	14-73-1
2275 583	23-67-160
2275 584	24-28-300
2275 585	8-05-16
	8-53-296
	23-67-194
2275 586	8-53-270
2275 587	8-05-14
	8-53-270
2275 588	14-72-1
2275 589	14-72-1
2275 590	8-35-22
2275 592	1-48-854
2275 594	23-67-98
2275 595	23-67-98
2275 596	23-67-86
2275 597	24-28-322
2275 738	4-25-1
2275 739	8-36-1
2275 847	17-23-3
2275 848	17-23-3
2275 849	17-23-3
2275 851	17-11-3
2275 852	17-11-3
2275 853	17-11-3
2275 855	17-11-3
2275 856	17-11-3
2275 857	17-11-3
2275 858	17-11-3
2275 859	17-11-3
2275 862	17-11-3
2275 863	17-11-3
2275 864	17-11-3
2275 865	17-11-3
2275 866	17-11-3
2275 867	17-11-3
2275 868	17-11-3
2275 869	17-11-3
2275 870	17-11-3
2275 871	17-11-3
2275 872	17-11-3
2275 873	17-11-3
2275 874	17-11-3
2275 875	17-11-3
2275 876	17-11-3
2275 877	17-11-3
2275 878	17-11-3
2275 879	17-11-3
2275 881	17-11-3
2275 882	17-11-3
2275 883	17-23-3
2275 884	17-23-3
2275 893	21-01-3
2275 896	21-01-3
2275 897	9-13-5
2275 898	22-01-5
2275 907	23-34-80
2275 908	23-34-80
2275 937	1-76-1
	23-21-3
2276 548	7-16-11
2276 586	7-16-11
2276 603	15-09-4
2276 645	7-16-11
2276 730	23-26-80
2276 749	15-09-4
2276 772	8-34-362
2276 778	8-34-362
2276 779	8-34-362
2276 790	12-07-1
2276 791	12-07-1
2276 804	15-09-4
2276 865	15-09-4
2276 870	15-03-60
2276 955	15-03-60
2277 016	1-48-832
2277 023	1-48-88
2277 025	1-48-858
2277 026	1-48-855
2277 028	1-48-258
2277 050	24-28-83
2277 051	24-29-1
2277 052	24-29-1
2277 053	24-29-1
2277 054	24-29-1
2277 061	1-48-379
2277 068	1-48-393
2277 085	1-48-280
2277 091	1-48-258
2277 123	24-01-36
2277 124	24-28-99
2277 186	24-28-205
2277 187	24-24-67
2277 190	24-28-326
2277 193	24-01-24
2277 194	24-24-150
2277 207	24-01-16
2277 209	24-28-8
2277 216	24-01-22
2277 247	1-48-600
	24-28-205
2277 248	1-48-600
	24-28-205
2277 249	1-48-600
	24-28-205
2277 262	24-28-108
2277 263	1-48-600
	24-28-205
2277 342	1-48-328
	24-28-73
2277 345	1-48-611
2277 378	24-25-20
2277 386	24-26-100
2277 412	24-28-387
2277 418	24-28-195
2277 419	1-48-599
2277 424	1-48-145
2277 426	24-28-396
2277 427	24-28-397
2277 428	24-28-397
2277 430	24-28-17
2277 432	24-26-100
2277 446	1-48-1
2277 447	1-48-1
2277 448	1-48-1
2277 454	24-24-68
2277 455	1-48-162
2277 458	1-48-162
2277 459	1-48-162
2277 460	1-48-162
2277 477	1-48-158
2277 478	24-24-130
2277 503	1-48-137
2277 504	1-48-137
2277 505	1-48-137
2277 559	1-48-391
2277 577	1-48-88
2277 585	24-28-199
2277 635	1-48-137
2277 639	1-48-599
2277 640	1-48-151
2277 641	1-48-151
2277 652	1-48-715
2277 668	24-28-305
2277 670	1-48-600
	24-28-205
2277 671	1-48-600
	24-28-205
2277 672	1-48-600
	24-28-205
2277 691	1-48-1
2277 692	1-48-151
2277 693	1-48-151
2277 713	24-28-26
2277 754	1-48-707
2277 790	24-25-20
2277 792	24-26-100
2277 795	24-26-100
2277 796	24-26-100
2277 797	24-26-100
2277 818	23-76-59
2277 819	23-76-59
2277 826	24-26-100
2277 835	24-28-24
2277 836	24-28-24
2277 873	1-48-688
2277 884	24-28-205
2277 885	24-28-205
2277 887	24-28-205
2277 888	24-28-205
2279 887	9-58-1
2279 890	1-01-1
2279 891	14-29-2
2279 893	6-01-3
2279 894	6-17-3
2279 897	11-02-1
2279 899	8-36-1
2279 901	14-73-1
2279 914	14-73-1
2279 915	8-56-8
2279 916	8-55-194
2279 917	24-28-55
	24-28-73
	24-28-93
2279 919	8-55-1
2279 920	8-55-1
2279 922	8-55-194
2279 923	8-55-158
2279 924	8-56-8
2279 925	8-55-158
2279 926	8-56-8
2279 930	8-50-334
2279 931	8-50-334
2279 932	8-55-335
2279 933	8-55-335
2279 934	8-55-194
2279 935	8-55-194
2279 954	19-01-3
2279 955	19-01-3
2279 960	21-136-228
2279 976	9-01-5
2279 985	19-57-1
2279 986	19-19-1
2279 989	2-07-1
2279 990	2-07-1
2279 991	2-07-1
2279 992	2-07-1
2279 993	1-42-1
2279 995	19-01-4
2279 997	19-54-55
2279 998	19-54-55
2279 999	1-42-1
2290 003	8-15-4
2290 008	8-15-4
2290 041	1-88-162
2290 045	1-82-2
2290 047	23-41-167
2290 048	23-41-25
2290 061	1-48-780
2290 069	8-16-4
2290 089	1-48-770
2290 102	1-82-29
2290 109	23-54-167
2290 110	23-54-204
2290 132	8-15-2
2290 133	8-15-4
2290 134	8-15-4
2290 188	8-20-8
2290 189	8-56-34
2290 191	1-48-4
2290 193	1-48-4
2290 199	8-15-2

MyMopar.com

PART NUMBER	CODE
2290 204. . .	8-55-57
2290 207. . . .	8-16-4
2290 263. . .	8-55-57
2290 268. . . .	1-48-7
2290 269. . . .	1-48-7
2290 270. .	23-54-125
2290 316. . . .	1-48-4
2290 329. . . .	8-37-1
2290 331. . .	8-37-372
2290 334. .	24-24-124
2290 348. . .	1-82-27
2290 349. . .	1-82-27
2290 352. . .	1-48-941
2290 354. . .	1-48-941
2290 360. . . .	1-06-2
2290 362. . .	8-41-35
2290 394. . .	8-37-372
2290 413. . . .	1-06-1
2290 419. . .	14-02-1
2290 420. . .	14-02-1
2290 425. . . .	8-37-1
2290 459. . .	21-84-1
2290 461. . .	21-84-1
2290 469. . .	21-84-4
2290 471. . .	21-84-4
2290 620. . . .	1-06-9
2290 623. . .	8-32-18
2290 628. . .	1-82-14
2290 629. . .	1-82-14
2290 704. . . .	1-10-1
2290 705. . . .	1-10-1
2290 706. . . .	1-10-1
2290 707. . . .	1-10-1
2290 708. . . .	1-10-1
2290 709. . . .	1-10-1
2290 710. . . .	1-10-1
2290 711. . . .	1-10-1
2290 712. . . .	1-10-1
2290 713. . . .	1-10-1
2290 714. . . .	1-10-1
2290 715. . . .	1-10-1
2290 718. . . .	1-10-1
2290 719. . . .	1-10-1
2290 725. . . .	1-10-1
2290 726. . . .	1-10-1
2290 727. . . .	1-10-1
2290 728. . . .	1-10-1
2290 814. . .	23-67-5
2290 815. . .	23-67-5
2290 882. . .	8-50-129
2290 966. . .	14-02-34
2291 006. . .	1-48-12
2291 007. . .	1-48-12
2291 008. . .	1-48-12
2291 009. . .	1-48-12
2291 054. . . .	8-15-4
2291 078. . . .	8-15-4
2291 087. . .	8-56-34
2291 093. . . .	8-16-6
2291 106. . . .	8-11-6
2291 107. . .	8-11-11
2291 115. . .	14-43-5
2291 118. . .	8-32-15
2291 133. . .	21-85-9
2291 140. . .	21-85-9
2291 141. . .	21-85-9
2291 148. . .	14-02-11
2291 149. .	23-58-535
	24-24-12
2291 232. . .	8-37-372
2291 233. . .	8-37-372
2291 234. . .	8-37-372
2291 235. . .	8-37-372
2291 302. . .	8-37-316
2291 303. . . .	8-37-1
2291 382. . .	8-58-60
2291 408. .	23-33-247
2291 411. . .	23-17-4
2291 412. . . .	8-15-4
2291 415. . .	1-88-120
2291 419. . . .	8-32-2
2291 420. . . .	8-32-2
2291 423. . . .	8-32-2
2291 424. . . .	8-32-2
2291 440. . .	8-33-120
2291 479. . . .	1-87-2
2291 504. . .	8-50-218
2291 539. . .	8-50-129
2291 553. . .	8-37-136
2291 571. . .	1-108-1
2291 572. . .	1-108-2
2291 573. . .	1-108-2
2291 575. . .	1-108-10
2291 576. . .	1-108-10
2291 577. . .	1-48-191
	1-88-116
2291 604. . .	24-01-65
2291 605. . .	24-01-65
2291 662. . .	8-15-32
2291 663. . . .	8-16-6
2291 801. . . .	8-15-4
2291 821. .	23-33-132
2291 829. .	23-33-227
2291 874. . . .	1-87-2
2291 919. . . .	8-15-2
2291 977. . .	23-67-5
2291 978. . .	23-67-5
2292 051. . .	23-17-21
	23-17-72
2292 108. .	23-103-10
2292 109. .	23-103-10
2292 117. . .	19-31-7
2292 162. . .	23-86-24
2292 163. . .	23-86-24
2292 164. . .	23-86-24
2292 165. . .	23-86-24
2292 166. . .	23-86-24
2292 167. . .	23-86-24
2292 180. . .	23-26-47
2292 181. . .	23-26-47
2292 194. . .	23-21-3
2292 195. . .	23-21-3
2292 201. . .	23-77-17
2292 218. .	23-64-267
2292 219. .	23-64-267
2292 220. . .	23-33-96
2292 221. . .	23-33-96
2292 222. . .	23-26-47
2292 223. . .	23-26-47
2292 240. . .	23-21-14
2292 241. . .	23-21-14
2292 242. . .	23-06-4
2292 289. . .	23-06-4
2292 292. . .	22-26-23
2292 293. . .	22-26-23
2292 294. . .	23-26-23
2292 295. . .	23-26-23
2292 296. . .	22-26-23
2292 297. . .	23-26-23
2292 298. . .	23-26-47
2292 299. . .	23-26-47
2292 300. . .	23-26-47
2292 301. . .	23-26-23
2292 302. . .	23-26-23
2292 327. . .	23-33-10
2292 341. . .	23-26-47
2292 366. . .	19-14-24
	19-14-29
2292 367. . .	19-14-35
2292 372. . .	23-86-35
2292 373. . .	23-86-35
2292 374. . .	23-86-35
2292 375. . .	23-86-35
2292 376. . .	23-86-35
2292 377. . .	23-86-35
2292 379. . .	23-20-32
2292 380. .	23-103-10
2292 381. .	23-103-10
2292 443. . .	23-26-80
2292 446. . .	23-20-9
2292 452. . .	23-26-80
2292 454. . .	23-38-3
2292 456. . .	23-38-14
2292 458. . .	23-26-87
2292 459. . .	23-26-87
2292 475. .	23-108-142
2292 481. . .	23-38-17
2292 484. . .	23-38-5
2292 485. . .	23-38-5
2292 492. .	23-108-98
2292 493. .	23-108-98
2292 499. . .	23-38-15
2292 502. . .	23-17-4
2292 503. . .	23-02-82
2292 512. . .	23-26-87
2292 513. . .	23-26-87
2292 514. . .	23-26-87
2292 518. . .	23-38-1
2292 537. . .	23-38-1
2292 544. . .	23-38-17
2292 592. .	23-113-45
	23-113-87
2292 597. . .	23-63-20
2292 807. . .	23-17-5
2292 872. . .	23-17-4
2292 876. . .	23-96-3
2292 877. . .	23-96-3
2292 887. . .	23-38-5
2292 888. . .	23-38-5
2292 889. . .	23-38-3
2292 894. .	23-103-10
2292 895. .	23-103-10
2292 902. .	23-64-267
2292 903. .	23-64-267
2292 992. . .	8-05-29
2293 100. . .	23-108-5
2293 101. . .	23-108-5
2293 102. . .	23-108-5
2293 103. . .	23-108-5
2293 104. . .	23-108-5
2293 105. . .	23-108-4
2293 106. . .	23-108-4
2293 107. . .	23-108-4
2293 108. . .	23-108-4
2293 109. . .	23-108-4
2293 110. . .	23-108-4
2293 111. . .	23-108-4
2293 112. . .	23-108-4
2293 113. . .	23-108-4
2293 114. . .	23-108-4
2293 115. .	23-109-35
2293 116. .	23-108-16
2293 117. .	23-108-16
2293 118. .	23-108-16
2293 119. .	23-108-16
2293 120. .	23-108-16
2293 121. .	23-108-16
2293 122. .	23-108-16
2293 123. .	23-108-16
2293 124. .	23-108-16
2293 125. .	23-108-16
2293 126. .	23-108-12
2293 127. .	23-108-12
2293 128. .	23-108-12
2293 129. .	23-108-12
2293 130. .	23-108-12
2293 131. .	23-108-12
2293 132. .	23-108-12
2293 133. .	23-108-12
2293 134. .	23-108-12
2293 135. .	23-108-12
2293 146. .	23-109-36
2293 147. .	23-109-36
2293 148. .	23-109-36
2293 149. .	23-109-36
2293 150. .	23-109-36
2293 151. .	23-109-35
2293 152. .	23-109-35
2293 153. .	23-109-35
2293 154. .	23-109-35
2293 155. .	23-109-35
2293 156. .	23-109-35
2293 157. .	23-109-35
2293 158. .	23-109-35
2293 159. .	23-109-35
2293 160. .	23-109-35
2293 161. . .	23-109-4
2293 162. . .	23-109-4
2293 163. . .	23-109-4
2293 164. . .	23-109-4
2293 165. . .	23-109-4
2293 166. . .	23-109-3
2293 167. . .	23-109-3
2293 168. . .	23-109-3
2293 169. . .	23-109-3
2293 170. . .	23-109-3
2293 430. . .	23-101-3
2293 431. . .	23-101-3
2293 432. . .	23-101-3
2293 433. . .	23-101-3
2293 434. . .	23-101-3
2293 435. . .	23-101-3
2293 438. . .	23-101-3
2293 439. . .	23-101-3
2293 440. . .	23-101-3
2293 441. . .	23-101-3
2293 462. . .	23-108-4
2293 463. . .	23-108-4
2293 464. . .	23-108-4
2293 465. . .	23-108-4
2293 466. . .	23-108-4
2293 467. . .	23-108-4
2293 468. . .	23-108-4
2293 469. . .	23-108-4
2293 470. . .	23-108-4
2293 471. . .	23-108-4
2293 472. .	23-108-12
2293 473. .	23-108-12
2293 474. .	23-108-12
2293 475. .	23-108-12
2293 476. .	23-108-12
2293 477. .	23-108-12
2293 478. .	23-108-12
2293 479. .	23-108-12
2293 480. .	23-108-12
2293 481. .	23-108-12
2293 586. . .	23-86-3
2293 587. . .	23-86-3
2293 634. .	23-109-35
2293 635. . .	23-108-5
2293 636. . .	23-108-4
2293 637. . .	23-108-4
2293 638. .	23-108-16
2293 639. .	23-108-12
2293 640. .	23-108-12
2293 644. .	23-109-36
2293 645. .	23-109-35

MyMopar.com

PART NUMBER	CODE
2293 646.	23-109-35
2293 647.	23-109-35
2293 648.	23-109-4
2293 649.	23-109-3
2293 650.	23-109-3
2293 651.	23-108-4
	23-108-5
2293 652.	23-108-4
2293 653.	23-108-4
2293 654.	23-108-16
2293 655.	23-108-16
2293 656.	23-108-12
2293 657.	23-108-12
2293 658.	23-108-12
2293 659.	23-108-12
2293 682.	23-112-153
2293 683.	23-112-153
2293 684.	23-112-153
2293 685.	23-112-153
2293 686.	23-112-153
2293 687.	23-112-153
2293 688.	23-112-153
2293 689.	23-112-153
2293 690.	23-112-153
2293 691.	23-112-153
2293 692.	23-112-153
2293 693.	23-112-153
2293 694.	23-112-153
2293 695.	23-112-153
2293 696.	23-112-153
2293 697.	23-112-153
2293 698.	23-112-153
2293 699.	23-112-153
2293 700.	23-112-153
2293 701.	23-112-153
2293 703.	23-112-12
2293 704.	23-112-12
2293 705.	23-112-12
2293 706.	23-112-12
2293 707.	23-112-12
2293 708.	23-112-153
2293 709.	23-112-153
2293 710.	23-112-153
2293 711.	23-112-153
2293 712.	23-112-153
2293 713.	23-112-153
2293 719.	23-112-153
2293 720.	23-112-45
2293 721.	23-112-45
2293 722.	23-112-108
	23-112-153
2293 723.	23-112-108
	23-112-153
2293 724.	23-112-112
	23-112-153
2293 725.	23-112-112
	23-112-153
2293 740.	23-108-5
2293 742.	23-108-4
2293 743.	23-108-4
2293 744.	23-108-16
2293 745.	23-108-16
2293 747.	23-76-34
2293 748.	23-108-12
2293 749.	23-108-12
2293 750.	23-76-18
2293 753.	23-109-36
2293 755.	23-109-35
2293 756.	23-109-35
2293 757.	23-109-4
2293 759.	23-109-3
2293 760.	23-108-4
2293 761.	23-108-4
2293 762.	23-108-12
2293 763.	23-108-12
2293 766.	23-109-36
2293 768.	23-109-35
2293 769.	23-109-35
2293 772.	23-109-4
2293 773.	23-109-3
2293 774.	23-101-3
2293 775.	23-101-3
2293 785.	23-109-35
2293 786.	23-109-35
2293 787.	23-109-35
2293 788.	23-109-35
2293 789.	23-108-12
2293 790.	23-108-12
2293 791.	23-108-12
2293 800.	23-109-35
2293 804.	23-108-12
2293 805.	23-108-12
2293 806.	23-108-12
2293 810.	23-108-12
2293 811.	23-108-12
2293 812.	23-108-12
2293 819.	23-108-4
2293 820.	23-108-12
2293 824.	23-108-12
2293 826.	23-108-4
2293 827.	23-108-12
2293 833.	23-109-35
2293 834.	23-108-12
	23-109-35
2293 835.	23-108-12
2293 855.	23-108-5
2293 856.	23-108-5
2293 857.	23-108-5
2293 861.	23-108-4
2293 862.	23-108-4
2293 863.	23-108-4
2293 864.	23-108-4
2293 865.	23-108-4
2293 866.	23-108-4
2293 867.	23-108-4
2293 868.	23-108-4
2293 869.	23-108-4
2293 870.	23-108-4
2293 874.	23-108-16
2293 875.	23-108-16
2293 876.	23-108-16
2293 877.	23-108-16
2293 878.	23-108-16
2293 879.	23-108-16
2293 880.	23-108-12
2293 881.	23-108-12
2293 882.	23-108-12
2293 883.	23-108-12
2293 884.	23-108-12
2293 885.	23-108-12
2293 886.	23-108-12
2293 887.	23-108-12
2293 888.	23-108-12
2293 889.	23-108-12
2293 890.	23-76-34
2293 891.	23-76-34
2293 892.	23-76-34
2293 893.	23-76-18
2293 894.	23-76-18
2293 895.	23-76-18
2293 906.	23-109-36
2293 907.	23-109-36
2293 910.	23-109-35
2293 911.	23-109-35
2293 912.	23-109-35
2293 913.	23-109-35
2293 914.	23-109-4
2293 915.	23-109-4
2293 918.	23-109-3
2293 919.	23-109-3
2293 920.	23-109-36
2293 921.	23-109-36
2293 922.	23-109-36
2293 926.	23-109-35
2293 927.	23-109-35
2293 928.	23-109-35
2293 929.	23-109-35
2293 930.	23-109-35
2293 931.	23-109-35
2293 932.	23-109-4
2293 933.	23-109-4
2293 934.	23-109-4
2293 935.	23-109-3
2293 936.	23-109-3
2293 937.	23-109-3
2293 960.	23-86-3
2293 962.	23-108-4
2293 963.	23-108-4
2293 969.	23-108-5
2293 970.	23-108-4
2293 973.	23-108-16
2293 974.	23-108-12
2293 977.	23-109-36
2293 978.	23-109-35
2293 981.	23-109-4
2293 982.	23-109-3
2293 991.	23-108-4
2293 992.	23-108-4
2293 993.	23-108-4
2295 580.	23-79-64
2295 581.	23-79-64
2296 004.	23-108-5
2296 005.	23-108-7
2296 006.	23-108-4
2296 008.	23-108-16
2296 009.	23-108-16
2296 010.	23-108-17
2296 011.	23-108-17
2296 012.	23-108-12
2296 013.	23-108-12
2296 014.	23-109-36
2296 015.	23-109-40
2296 016.	23-109-35
2296 017.	23-109-4
2296 019.	23-109-7
2296 020.	23-109-3
2296 021.	23-86-3
2296 027.	23-108-5
2296 028.	23-108-4
2296 029.	23-108-16
2296 031.	23-108-17
2296 032.	23-108-12
2296 034.	23-108-4
2296 036.	23-109-36
2296 037.	23-109-40
2296 038.	23-109-35
2296 039.	23-109-4
2296 040.	23-109-7
2296 041.	23-109-3
2296 092.	23-109-36
2296 093.	23-109-36
2296 094.	23-109-36
2296 095.	23-109-35
2296 096.	23-109-35
2296 097.	23-109-35
2296 104.	23-109-4
2296 105.	23-109-4
2296 106.	23-109-4
2296 107.	23-109-3
2296 108.	23-109-3
2296 109.	23-109-3
2296 128.	23-108-4
2296 129.	23-108-4
2296 130.	23-108-4
2296 134.	23-108-12
2296 135.	23-108-12
2296 136.	23-108-12
2296 137.	23-108-12
2296 149.	23-109-35
2296 150.	23-109-35
2296 151.	23-109-35
2296 153.	23-109-35
2296 154.	23-109-35
2296 155.	23-109-35
2296 157.	23-109-3
2296 158.	23-109-3
2296 159.	23-109-3
2296 161.	23-108-4
2296 162.	23-108-4
2296 163.	23-108-4
2296 164.	23-108-12
2296 165.	23-108-12
2296 166.	23-108-12
2296 167.	23-108-12
2296 168.	23-108-12
2296 169.	23-108-12
2296 179.	23-108-4
2296 180.	23-108-4
2296 181.	23-108-4
2296 182.	23-108-12
2296 183.	23-108-12
2296 184.	23-108-12
2296 185.	23-108-12
2296 186.	23-108-12
2296 187.	23-108-12
2296 200.	23-108-4
2296 201.	23-108-4
2296 202.	23-108-4
2296 203.	23-108-4
2296 204.	23-108-4
2296 205.	23-108-12
2296 206.	23-108-12
2296 207.	23-108-12
2296 208.	23-108-12
2296 209.	23-108-12
2296 215.	23-109-35
2296 216.	23-109-35
2296 217.	23-109-35
2296 218.	23-109-35
2296 219.	23-109-35
2296 220.	23-109-35
2296 221.	23-109-35
2296 222.	23-109-35
2296 223.	23-109-35
2296 224.	23-109-35
2296 225.	23-109-3
2296 226.	23-109-3
2296 227.	23-109-3
2296 228.	23-109-3
2296 229.	23-109-3
2296 230.	23-108-4
2296 231.	23-108-4
2296 232.	23-108-4
2296 233.	23-108-4
2296 234.	23-108-4
2296 236.	23-108-12
2296 237.	23-108-12
2296 238.	23-108-12
2296 239.	23-108-12
2296 240.	23-108-12
2296 241.	23-108-12
2296 242.	23-108-12
2296 243.	23-108-12
2296 244.	23-108-12
2296 245.	23-108-12
2296 251.	23-86-3
2296 252.	23-86-3

MyMopar.com

PART NUMBER	CODE
2296 253.	23-86-3
2296 265.	23-108-5
2296 266.	23-108-5
2296 267.	23-108-5
2296 268.	23-108-5
2296 269.	23-108-5
2296 270.	23-108-4
2296 271.	23-108-4
2296 272.	23-108-4
2296 273.	23-108-4
2296 274.	23-108-4
2296 275.	23-108-4
2296 276.	23-108-4
2296 277.	23-108-4
2296 278.	23-108-4
2296 279.	23-108-4
2296 285.	23-108-16
2296 286.	23-108-16
2296 287.	23-108-16
2296 288.	23-108-16
2296 289.	23-108-16
2296 290.	23-108-15
2296 291.	23-108-15
2296 292.	23-108-15
2296 293.	23-108-15
2296 294.	23-108-15
2296 300.	23-108-32
2296 301.	23-108-32
2296 302.	23-108-32
2296 303.	23-108-32
2296 304.	23-108-32
2296 320.	23-71-1
2296 321.	23-71-1
2296 322.	23-71-1
2296 323.	23-71-1
2296 324.	23-71-1
2296 325.	23-71-1
2296 326.	23-71-1
2296 327.	23-71-1
2296 328.	23-71-1
2296 329.	23-71-1
2296 340.	23-109-36
2296 341.	23-109-36
2296 342.	23-109-36
2296 343.	23-109-36
2296 344.	23-109-36
2296 345.	23-109-35
2296 346.	23-109-35
2296 347.	23-109-35
2296 348.	23-109-35
2296 349.	23-109-35
2296 355.	23-109-36
2296 356.	23-109-36
2296 357.	23-109-36
2296 358.	23-109-36
2296 359.	23-109-36
2296 360.	23-109-35
2296 361.	23-109-35
2296 362.	23-109-35
2296 363.	23-109-35
2296 364.	23-109-35
2296 370.	23-109-4
2296 371.	23-109-4
2296 372.	23-109-4
2296 373.	23-109-4
2296 374.	23-109-4
2296 375.	23-109-3
2296 376.	23-109-3
2296 377.	23-109-3
2296 378.	23-109-3
2296 379.	23-109-3
2296 385.	23-109-4
2296 386.	23-109-4
2296 387.	23-109-4
2296 388.	23-109-4
2296 389.	23-109-4
2296 390.	23-108-5
	23-109-3
2296 391.	23-109-3
2296 392.	23-109-3
2296 393.	23-109-3
2296 394.	23-109-3
2296 399.	23-108-5
2296 400.	23-108-5
2296 401.	23-108-5
2296 402.	23-108-5
2296 411.	23-108-16
2296 412.	23-108-16
2296 413.	23-108-16
2296 414.	23-108-16
2296 415.	23-108-15
2296 416.	23-108-15
2296 417.	23-108-15
2296 418.	23-108-15
2296 423.	23-108-32
2296 424.	23-108-32
2296 425.	23-108-32
2296 426.	23-108-32
2296 427.	23-108-32
2296 428.	23-108-32
2296 429.	23-108-32
2296 430.	23-108-32
2296 444.	23-109-36
2296 445.	23-109-35
2296 448.	23-109-4
2296 449.	23-109-3
2296 452.	23-108-4
2296 453.	23-108-4
2296 454.	23-108-4
2296 455.	23-108-4
2296 456.	23-108-4
2296 457.	23-108-4
2296 458.	23-108-4
2296 459.	23-108-4
2296 526.	23-112-108
2296 527.	23-112-108
2296 528.	23-112-153
2296 530.	23-112-45
2296 531.	23-112-45
2296 532.	23-112-12
2296 536.	23-112-112
2296 537.	23-112-112
2296 538.	23-113-2
2296 539.	23-113-2
2296 540.	23-112-153
2296 541.	23-112-153
2296 550.	23-108-4
2296 551.	23-108-4
2296 552.	23-108-4
2296 559.	23-108-4
2296 560.	23-108-4
2296 561.	23-108-4
2296 568.	23-108-4
2296 569.	23-108-4
2296 570.	23-108-4
2296 577.	23-108-5
2296 578.	23-108-7
2296 579.	23-108-4
2296 580.	23-108-16
2296 581.	23-108-16
2296 582.	23-108-17
2296 583.	23-108-17
2296 584.	23-108-12
2296 585.	23-108-12
2296 587.	23-109-36
2296 588.	23-109-40
2296 589.	23-109-35
2296 590.	23-109-4
2296 591.	23-109-7
2296 592.	23-109-3
2296 593.	23-108-5
2296 595.	23-108-4
2296 596.	23-108-16
2296 597.	23-108-17
2296 598.	23-108-12
2296 600.	23-109-36
2296 601.	23-109-40
2296 602.	23-109-35
2296 603.	23-109-4
2296 604.	23-109-7
2296 605.	23-109-3
2296 606.	23-108-4
2296 607.	23-108-4
2296 608.	23-108-4
2296 609.	23-108-4
2296 614.	23-108-4
2296 615.	23-108-4
2296 616.	23-108-4
2296 617.	23-108-4
2296 622.	23-108-4
2296 623.	23-108-4
2296 624.	23-108-4
2296 625.	23-108-12
2296 626.	23-108-12
2296 630.	23-109-35
2296 631.	23-109-3
2296 632.	23-108-4
2296 633.	23-108-4
2296 634.	23-108-4
2296 635.	23-108-12
2296 639.	23-108-4
2296 640.	23-108-4
2296 641.	23-108-4
2296 642.	23-108-12
2296 945.	23-109-4
2296 993.	23-109-3
2296 994.	23-109-3
2297 038.	23-102-3
2297 041.	23-86-3
2297 042.	23-86-3
2297 043.	23-86-3
2297 044.	23-86-3
2297 050.	23-113-87
2297 051.	23-113-87
2297 052.	23-113-87
2297 053.	23-113-87
2297 054.	23-11-87
2297 064.	23-103-3
2297 066.	23-103-3
2297 070.	23-33-132
2297 071.	23-84-3
2297 072.	23-33-42
2297 075.	23-18-27
2297 076.	23-113-84
2297 082.	23-92-5
2297 083.	23-92-5
2297 084.	23-92-5
2297 085.	23-92-5
2297 086.	23-92-5
2297 087.	23-92-5
2297 088.	23-101-3
2297 089.	23-101-3
2297 090.	23-101-3
2297 091.	23-101-3
2297 092.	23-101-2
2297 093.	23-101-3
2297 110.	23-92-5
2297 111.	23-92-5
2297 112.	23-92-5
2297 113.	23-92-5
2297 114.	23-92-5
2297 115.	23-92-5
2297 116.	23-92-5
2297 117.	23-92-5
2297 118.	23-92-5
2297 119.	23-92-5
2297 120.	23-101-3
2297 121.	23-101-3
2297 122.	23-101-3
2297 123.	23-101-3
2297 124.	23-101-3
2297 125.	23-101-3
2297 126.	23-101-3
2297 127.	23-101-3
2297 130.	23-101-3
2297 131.	23-101-3
2297 132.	23-101-3
2297 133.	23-101-3
2297 134.	23-101-3
2297 135.	23-101-3
2297 136.	23-101-3
2297 137.	23-101-3
2297 138.	23-101-3
2297 139.	23-101-3
2297 154.	23-91-6
2297 155.	23-91-6
2297 159.	23-76-66
2297 160.	23-76-3
2297 161.	23-76-3
2297 162.	23-103-3
2297 163.	23-103-3
2297 164.	23-103-3
2297 170.	23-92-5
2297 171.	23-92-5
2297 172.	23-92-5
2297 173.	23-92-5
2297 182.	23-92-5
2297 183.	23-92-5
2297 184.	23-92-5
2297 185.	23-92-5
2297 186.	23-92-5
2297 187.	23-92-5
2297 188.	23-92-5
2297 189.	23-92-5
2297 190.	23-101-3
2297 191.	23-101-3
2297 192.	23-101-3
2297 193.	23-101-3
2297 194.	23-101-3
2297 195.	23-101-3
2297 196.	23-101-3
2297 197.	23-101-3
2297 198.	23-63-33
2297 201.	23-79-3
2297 202.	23-79-3
2297 203.	23-79-3
2297 207.	23-79-33
2297 208.	23-79-33
2297 209.	23-79-33
2297 219.	23-79-3
2297 222.	23-79-33
2297 223.	23-109-5
2297 224.	23-84-3
2297 245.	23-79-3
2297 255.	23-79-33
2297 268.	23-20-29
2297 270.	23-21-16
2297 271.	23-79-79
2297 272.	23-109-5
2297 273.	23-109-5
2297 274.	23-79-33
2297 275.	23-79-33
2297 276.	23-79-33
2297 277.	23-109-5
2297 303.	23-114-10
2297 304.	23-113-52
2297 305.	23-113-52
2297 306.	23-113-52
2297 307.	23-113-52
2297 318.	23-33-132

MyMopar.com

PART NUMBER	CODE
2297 516	23-92-5
2297 517	23-92-5
2297 768	23-109-35
2298 507	19-48-7
2298 508	19-48-7
2298 509	19-48-7
2298 511	9-10-5
2298 512	17-11-3
2298 513	17-11-3
2298 514	21-138-2
2298 518	6-14-1
2298 522	22-01-5
2298 523	22-01-5
2298 533	2-08-57
2298 534	2-08-57
2298 535	2-10-55
2298 536	2-08-57
2298 537	2-10-55
2298 543	5-03-1
2298 585	23-34-283
2298 597	1-72-5
2298 648	1-32-2
	23-103-3
2298 746	23-34-80
2298 758	8-27-279
2298 759	8-27-279
2298 765	8-27-279
2298 767	8-12-1
	8-31-2
2298 768	8-16-3
2298 769	8-16-3
2298 770	8-16-3
2298 773	8-56-8
2298 774	8-55-194
2298 775	8-55-1
2298 776	8-55-194
2298 787	8-34-1
2298 789	8-34-1
2298 790	8-34-1
2298 791	8-32-2
2298 792	8-32-2
2298 793	8-32-2
2298 794	8-32-2
2298 796	24-01-1
2298 797	24-01-5
2298 803	17-23-3
2298 804	17-23-3
2298 805	17-23-3
2298 806	17-23-3
2298 807	17-23-3
2298 836	5-03-1
2298 848	5-03-1
2298 850	24-01-5
2298 855	8-05-14
	8-53-270
2298 876	23-67-164
2298 880	23-67-164
2298 882	8-16-1
2298 883	8-05-16
	8-53-296
	23-67-194
2298 903	6-14-1
2298 904	6-13-1
2298 905	6-13-1
2298 907	7-42-4
2298 909	6-17-3
2298 912	17-23-3
2298 913	11-01-1
2298 914	11-01-1
2298 915	11-01-1
2298 917	9-48-6
2298 918	17-12-4
2298 919	17-12-4
2298 929	17-11-3
2298 931	21-134-5
2298 934	17-11-3
2298 935	17-11-3
2298 939	5-39-1
2298 940	16-03-1
2298 941	16-03-1
2298 942	5-03-1
2298 943	5-03-1
2298 946	5-52-62
2298 952	21-01-3
2298 953	21-01-3
2298 967	16-20-8
2298 968	1-42-1
2299 003	14-30-4
2299 005	14-35-1
2299 007	14-30-4
2299 017	14-30-4
2299 021	14-30-4
2299 036	14-30-4
2299 037	14-30-7
2299 038	14-41-3
2299 039	14-35-39
2299 040	14-35-33
2299 041	14-35-1
2299 042	14-30-8
2299 057	14-30-4
2299 059	14-43-5
2299 060	14-30-4
2299 069	14-30-4
2299 070	14-30-4
2299 072	14-30-4
2299 073	14-30-4
2299 074	14-30-4
2299 076	14-30-4
2299 077	14-30-4
2299 078	14-30-4
2299 079	14-30-4
2299 080	14-30-4
2299 082	14-30-4
2299 083	14-30-4
2299 086	14-30-4
2299 089	14-35-6
2299 092	14-30-7
2299 093	14-30-4
2299 108	14-43-5
2299 109	14-35-1
2299 110	14-43-5
2299 111	14-43-5
2299 112	14-43-5
2299 113	14-43-5
2299 116	14-43-5
2299 117	14-43-5
2299 120	14-43-5
2299 121	14-35-1
2299 171	14-30-1
2299 173	14-30-1
2299 176	14-30-4
2299 181	14-30-4
2299 182	14-30-7
2299 184	14-30-4
2299 314	8-29-143
2299 316	8-37-373
2299 318	24-01-6
2299 319	8-27-315
2299 320	8-27-208
2299 321	8-27-138
2299 322	8-27-158
2299 328	8-56-8
2299 339	8-37-98
2299 373	1-135-1
2299 433	23-14-53
2299 434	23-14-53
2299 447	23-54-6
	23-54-27
2299 448	23-54-6
2299 449	23-54-6
2299 534	1-67-9
2299 574	1-76-1
	23-21-3
2299 575	23-21-5
2299 618	23-14-24
2299 640	23-47-6
2299 641	23-47-6
2299 643	23-47-6
2299 649	23-47-6
2299 650	23-47-6
2299 651	23-47-6
2299 655	23-47-6
2299 656	23-47-6
2299 661	23-47-66
2299 662	23-47-6
2299 663	23-47-15
2299 672	23-21-14
2299 678	23-41-4
2299 679	23-41-4
2299 680	23-41-4
2299 681	23-41-4
2299 682	23-41-4
2299 683	23-41-4
2299 684	23-41-4
2299 685	23-41-4
2299 686	23-54-72
2299 687	23-14-147
2299 736	23-54-77
2299 802	23-41-33
2299 803	23-41-33
2299 804	23-41-106
2299 805	23-41-106
2299 846	1-76-3
2299 897	23-54-92
2299 972	1-67-2
2299 980	23-47-26
2299 989	23-47-6
2400 010	16-20-1
2400 011	16-20-1
2400 012	16-20-1
2400 013	16-20-1
2400 064	21-04-2
2400 065	21-04-1
2400 078	21-117-3
2400 099	21-03-1
2400 124	21-117-1
2400 126	21-117-3
2400 130	21-03-1
2400 131	21-03-1
2400 134	21-04-1
2400 136	21-04-1
2400 154	21-02-1
2400 155	21-02-1
2400 156	21-02-1
2400 157	21-02-1
2400 158	21-02-1
2400 238	21-02-1
2400 284	21-133-65
2400 315	21-14-1
2400 339	21-139-147
2400 365	21-136-232
2400 389	21-136-17
2400 430	21-139-4
2400 431	21-139-4
2400 437	21-85-4
2400 438	21-09-29
2400 479	21-02-8
2400 492	21-118-40
2400 528	21-136-237
2400 652	21-119-15
2400 655	21-119-19
2400 683	21-10-4
2400 690	21-02-1
2400 692	21-10-16
2400 694	21-09-2
2400 696	21-15-2
2400 697	21-16-3
2400 698	21-42-23
2400 699	21-42-23
2400 700	21-04-1
2400 705	21-138-13
2400 724	21-133-5
2400 725	21-133-36
2400 726	21-136-5
2400 729	21-137-22
2400 801	21-02-1
2401 000	22-03-2
2401 001	22-03-2
2401 007	5-03-5
2401 008	5-03-5
2401 011	5-03-5
2401 012	5-03-5
2401 022	22-03-1
2401 023	22-03-1
2401 037	9-64-24
2401 041	23-32-31
2401 047	13-01-1
2401 051	19-27-33
2401 053	19-27-33
2401 095	6-14-1
2401 097	6-13-1
2401 098	6-13-4
2401 126	5-100-206
2401 129	5-100-210
2401 130	5-105-1
2401 132	5-100-161
2401 154	5-100-197
2401 155	5-113-17
2401 159	5-100-94
2401 161	5-100-195
2401 163	5-100-91
	5-100-161
2401 164	5-100-91
2401 165	5-100-26
2401 166	5-100-32
2401 168	5-100-20
2401 170	5-100-90
2401 171	5-100-91
2401 172	5-100-161
2401 173	5-100-22
2401 209	8-33-23
2401 275	21-30-336
2401 276	21-30-336
2401 277	21-30-336
2401 278	21-30-336
2401 279	21-30-336
2401 300	4-23-38
2401 301	4-25-10
2401 303	4-23-28
2401 304	4-23-1
2401 308	4-23-1
2401 314	23-33-236
2401 345	4-23-1
2401 347	4-23-1
2401 350	16-02-1
2401 351	16-02-1
2401 355	16-02-1
2401 356	16-02-1
2401 359	16-02-1
2401 362	16-02-1
2401 405	5-31-11
2401 562	11-10-3
2401 577	11-05-9
	11-06-10
2401 593	11-08-5
2401 641	16-02-1

MyMopar.com

PART NUMBER	CODE
2401 653	9-71-5
2401 668	16-02-1
2401 698	14-02-72
2401 725	6-50-1
2401 770	4-25-1
2401 800	5-03-5
2401 801	5-03-5
2401 806	5-03-5
2401 807	5-03-5
2401 852	5-100-62
2401 853	5-100-167
2401 855	5-113-17
2401 856	5-100-22
2401 857	5-100-95
2401 858	5-100-195
2401 866	5-100-87
2401 908	6-22-15
2401 910	6-52-12
2401 930	5-64-1
2401 958	22-01-42
2402 011	9-39-15
2402 090	9-13-5
2402 110	14-26-9
2402 113	14-26-6
2402 116	9-03-4
2402 148	9-02-5
2402 178	9-39-14
2402 182	9-67-4
2402 183	9-67-4
2402 185	9-64-24
2402 201	14-39-45
2402 211	14-30-1
2402 212	14-30-1
2402 215	9-45-1
2402 218	6-09-1
2402 227	10-03-4
2402 265	9-39-15
2402 270	9-03-18
2402 288	9-41-4
2402 289	9-41-4
2402 290	9-41-4
2402 293	9-15-1
2402 294	7-06-1
2402 297	8-28-15
2402 311	10-03-7
2402 312	9-39-17
2402 322	9-39-6
2402 323	9-39-6
2402 324	9-39-6
2402 325	9-39-6
2402 326	9-42-1
2402 330	9-07-5
2402 332	9-48-7
2402 335	9-48-6
2402 337	9-48-6
2402 351	9-03-12
2402 353	9-50-5
2402 354	9-50-5
2402 358	9-03-4
2402 359	14-30-1
2402 521	9-43-1
2402 522	9-43-1
2402 525	9-43-3
2402 607	10-26-46
2402 639	10-09-5
2402 649	9-02-16
2402 719	9-41-4
2402 730	7-06-1
2402 852	9-01-24
2402 854	9-01-24
2403 008	1-07-1
2403 247	3-01-34
2403 265	17-19-20
2404 050	3-32-1
2404 129	3-03-1
2404 777	5-31-15
2404 779	5-27-1
2404 781	5-30-12
2404 859	21-30-428
2404 880	21-30-418
2404 881	21-30-418
2404 882	21-30-434
2404 885	21-30-427
2404 890	21-30-2
2404 929	11-10-3
2404 930	11-10-3
2404 934	11-05-1
2404 938	11-05-1
2404 941	11-06-10
2404 942	11-05-9
2404 945	11-05-4
2404 946	11-05-4
2405 003	19-30-4
2405 004	19-30-4
2405 011	19-30-4
2405 013	19-30-4
2405 018	19-30-4
2405 019	19-30-4
2405 041	23-32-110
2405 050	12-07-1
2405 051	12-07-1
2405 085	6-50-6
	6-52-15
2405 332	11-09-3
2405 333	11-09-3
2406 188	10-23-7
2406 394	9-31-4
2408 007	21-02-1
2409 323	14-86-1
2410 007	23-112-18
2410 009	23-112-18
2410 028	23-52-1
2410 050	23-52-15
2410 054	23-115-6
2410 102	23-115-4
2411 000	23-108-4
2411 001	23-108-4
2411 002	23-108-4
2411 009	23-108-4
2411 010	23-108-4
2411 011	23-108-4
2411 018	23-86-3
2411 020	23-86-3
2411 021	23-86-3
2411 022	23-86-3
2411 023	23-86-3
2411 028	23-86-3
2411 029	23-86-3
2411 030	23-86-3
2411 031	23-86-3
2411 042	23-101-3
2411 043	23-101-3
2411 044	23-101-3
2411 045	23-101-3
2411 046	23-101-3
2411 047	23-101-3
2411 048	23-101-3
2411 049	23-101-3
2411 050	23-101-3
2411 051	23-101-3
2411 052	23-101-3
2411 053	23-101-3
2411 054	23-101-3
2411 055	23-101-3
2411 056	23-101-3
2411 057	23-101-3
2411 058	23-101-3
2411 059	23-101-3
2411 060	23-101-3
2411 061	23-101-3
2411 062	23-112-153
2411 063	23-112-153
2411 064	23-112-153
2411 065	23-112-153
2411 066	23-112-153
2411 067	23-112-153
2411 068	23-112-153
2411 069	23-112-153
2411 070	23-112-153
2411 071	23-112-153
2411 072	23-112-153
2411 073	23-112-153
2411 113	23-108-5
2411 114	23-108-5
2411 115	23-108-5
2411 116	23-108-4
2411 117	23-108-4
2411 118	23-108-4
2411 119	23-108-4
2411 120	23-108-4
2411 121	23-108-4
2411 125	23-108-16
2411 126	23-108-16
2411 127	23-108-16
2411 128	23-108-15
2411 129	23-108-15
2411 130	23-108-15
2411 134	23-108-32
2411 135	23-108-32
2411 136	23-108-84
2411 152	23-109-36
2411 153	23-109-36
2411 154	23-109-36
2411 155	23-109-35
2411 156	23-109-35
2411 157	23-109-35
2411 161	23-109-36
2411 162	23-109-36
2411 163	23-109-36
2411 164	23-109-35
2411 165	23-109-35
2411 166	23-109-35
2411 170	23-109-4
2411 171	23-109-4
2411 172	23-109-4
2411 173	23-109-3
2411 174	23-109-3
2411 175	23-109-3
2411 179	23-109-4
2411 180	23-109-4
2411 181	23-109-4
2411 182	23-109-3
2411 183	23-109-3
2411 184	23-109-3
2411 185	23-112-12
2411 186	23-112-12
2411 187	23-112-12
2411 191	23-108-4
2411 192	23-108-4
2411 197	23-108-4
2411 198	23-108-4
2411 203	23-108-4
2411 204	23-108-4
2411 209	23-108-4
2411 211	23-108-4
2411 212	23-108-4
2411 213	23-108-4
2411 217	23-108-4
2411 218	23-108-4
2411 219	23-108-4
2411 223	23-108-4
2411 224	23-108-4
2411 225	23-108-4
2411 668	23-96-9
2411 669	23-96-9
2413 836	23-112-153
2413 837	23-112-153
2414 868	23-109-4
2414 869	23-109-4
2414 871	23-109-3
2414 872	23-109-3
2414 873	23-109-3
2414 881	23-109-35
2414 882	23-109-35
2414 883	23-109-35
2414 884	23-109-35
2414 885	23-109-4
2414 886	23-109-4
2414 889	23-109-3
2414 890	23-109-3
2414 891	23-109-3
2414 892	23-109-3
2414 907	23-109-35
2414 908	23-109-35
2414 909	23-109-35
2414 910	23-109-35
2414 911	23-109-35
2414 922	23-109-3
2414 923	23-109-3
2414 924	23-109-3
2414 925	23-109-3
2414 932	23-108-12
2414 933	23-108-12
2414 934	23-108-12
2414 935	23-108-12
2415 617	23-109-35
2415 619	23-109-35
2415 620	23-109-35
2415 621	23-109-35
2415 622	23-109-35
2415 623	23-109-35
2415 626	23-109-4
2415 632	23-109-3
2415 633	23-109-3
2415 634	23-109-3
2415 635	23-109-3
2415 655	23-109-35
2415 656	23-109-35
2415 657	23-109-35
2415 658	23-109-35
2415 659	23-109-35
2415 660	23-109-35
2415 661	23-109-35
2415 662	23-109-35
2415 663	23-109-35
2415 664	23-109-35
2415 669	23-109-4
2415 680	23-109-3
2415 681	23-109-3
2415 682	23-109-3
2415 683	23-109-3
2415 684	23-109-3
2415 814	23-108-5
2415 818	23-108-4
2415 822	23-108-4
2415 834	23-108-16
2415 835	23-108-16
2415 836	23-108-16
2415 837	23-108-16
2415 838	23-108-12
2415 842	23-108-12
2415 858	23-109-36
2415 859	23-109-36
2415 860	23-109-36
2415 861	23-109-36
2415 862	23-109-35

MyMopar.com

PART NUMBER	CODE
2415 863.	23-109-35
2415 864.	23-109-35
2415 865.	23-109-35
2415 866.	23-109-35
2415 867.	23-109-35
2415 868.	23-109-35
2415 869.	23-109-35
2415 878.	23-109-4
2415 879.	23-109-4
2415 880.	23-109-4
2415 881.	23-109-4
2415 882.	23-109-3
2415 883.	23-109-3
2415 884.	23-109-3
2415 885.	23-109-3
2415 894.	23-109-36
2415 895.	23-109-36
2415 896.	23-109-36
2415 897.	23-109-36
2415 898.	23-109-35
2415 899.	23-109-35
2415 900.	23-109-35
2415 901.	23-109-35
2415 910.	23-109-4
2415 911.	23-109-4
2415 912.	23-109-4
2415 913.	23-109-4
2415 914.	23-109-3
2415 915.	23-109-3
2415 916.	23-109-3
2415 917	23-109-3
2417 180.	7-16-11
2417 182.	15-03-3
2417 188.	7-17-19
2417 194.	7-16-19
	7-17-21
2417 195.	7-17-21
2417 202.	15-25-6
2417 240.	15-03-42
2419 000.	8-05-28
2419 071.	23-38-12
2419 083.	23-96-7
2419 269.	23-38-6
2419 361.	23-04-229
2419 388.	23-26-23
2419 389.	23-26-23
2419 390.	23-26-23
2419 392.	23-26-23
2419 393.	23-26-23
2419 394.	23-26-23
2419 396.	23-26-47
2419 451.	23-26-23
2419 452.	23-26-23
2419 453.	23-26-47
2419 599.	23-26-23
2419 600.	23-26-23
2419 601.	23-26-23
2419 709.	21-30-413
2419 710.	21-30-414
2419 711.	21-30-414
2421 069.	3-33-1
2421 075.	1-07-1
2421 082.	5-100-1
2421 083.	5-105-1
2421 084.	5-100-166
2421 130.	7-07-1
2421 131.	7-07-1
2421 135.	8-55-1
2421 137.	8-29-129
2421 138.	8-29-145
2421 174.	8-27-158
2421 196.	1-82-46
2421 208.	1-76-3
	23-21-8
2421 242.	23-17-13
2421 244.	1-45-1
2421 245.	1-45-1
2421 262.	21-134-5
2421 303.	5-52-62
2421 314.	5-03-1
2421 336.	9-34-5
2421 337.	9-34-5
2421 338.	9-34-5
2421 339.	9-34-5
2421 340.	9-34-5
2421 341.	9-34-5
2421 342.	9-34-5
2421 343.	9-34-5
2421 346.	5-63-3
2421 347.	5-63-1
2421 352.	5-01-2
2421 354.	6-52-1
2421 355.	5-100-2
2421 363.	9-50-1
2421 364.	9-01-5
2421 365.	9-39-1
2421 372.	9-35-1
2421 373.	9-35-1
2421 374.	9-35-1
2421 377.	21-138-2
2421 446.	1-67-1
2421 447.	1-67-1
2421 473.	8-27-279
2421 495.	8-36-1
2421 496.	8-36-1
2421 497.	8-36-1
2421 804.	8-29-99
2421 812.	24-25-107
2421 813.	24-25-107
2421 837.	8-52-354
2421 848.	8-27-138
2421 849.	8-27-158
2422 450.	23-32-30
2422 451.	23-63-106
2422 466.	23-22-53
2422 469.	23-22-53
2422 470.	23-22-53
2422 471.	23-63-110
2422 849.	23-32-70
2422 850.	23-32-25
2422 851.	23-32-25
2422 981.	23-109-38
2423 018.	23-23-57
2423 449.	23-32-87
2423 464.	23-23-12
2423 465.	23-23-12
2423 470.	23-23-12
2423 472.	23-23-12
2423 474.	23-23-12
2423 559.	23-19-21
2423 560.	23-48-19
2423 561.	23-48-19
2423 976.	23-23-12
2423 977.	23-23-12
2424 042.	23-58-80
2424 043.	23-58-82
2424 297.	8-55-160
	23-23-12
2424 563.	1-67-3
2425 124.	23-19-8
2425 125.	23-19-8
2425 214.	23-34-120
2425 215.	23-34-120
2425 264.	12-01-5
2425 265.	12-01-5
2425 278.	23-32-17
2425 414.	23-32-105
2425 415.	23-32-105
2426 129.	23-67-160
2426 130.	23-67-160
2426 134.	23-67-160
2426 145.	8-19-3
2426 146.	8-15-2
2426 154.	24-24-124
2426 164.	21-84-4
2426 166.	8-50-186
2426 255.	23-67-25
2426 286.	8-37-508
2426 935.	1-48-175
2426 995.	8-19-16
2427 462.	1-82-25
2428 000.	23-41-33
2428 001.	23-41-33
2428 046.	1-67-6
2428 094.	23-47-6
2428 095.	23-47-6
2428 096.	23-47-6
2428 097.	23-47-6
2428 133.	23-47-6
2428 166.	23-08-76
2428 179.	23-15-32
	23-75-32
2428 225.	23-41-34
2428 251.	23-18-40
2429 196.	23-101-3
2429 197.	23-101-3
2429 198.	23-101-3
2429 199.	23-101-3
2429 205.	23-108-4
2429 206.	23-108-4
2429 209.	23-108-12
2429 210.	23-108-12
2429 213.	23-109-36
2429 214.	23-109-35
2429 216.	23-109-35
2429 217.	23-109-4
2429 218.	23-109-3
2429 219.	23-109-3
2429 224.	23-108-5
2429 225.	23-108-4
2429 226.	23-108-4
2429 228.	23-108-16
2429 229.	23-108-16
2429 230.	23-108-12
2429 231.	23-108-12
2429 232.	23-108-12
2429 233.	23-108-12
2431 939.	23-86-3
2431 940.	23-86-3
2431 941.	23-86-3
2431 942.	23-86-3
2431 943.	23-86-3
2431 944.	23-86-3
2431 946.	23-86-3
2431 947.	23-86-3
2431 948.	23-86-3
2432 150.	23-113-84
2432 313.	23-96-8
2432 958.	23-113-56
2432 959.	23-113-56
2434 192.	23-109-16
2448 097.	19-54-228
2448 098.	19-54-228
2448 250.	8-27-279
2448 252.	8-27-205
2448 273.	8-27-61
2448 330.	9-32-2
2448 379.	9-09-2
2448 380.	9-09-2
2448 381.	9-09-2
2448 382.	10-23-7
2448 383.	2-07-1
2448 384.	2-07-1
2448 398.	2-07-1
2448 611.	23-67-164
2448 620.	24-28-64
2448 621.	24-28-64
2448 805.	8-27-292
2448 810.	1-87-2
2448 811.	1-87-2
2448 812.	1-87-2
2448 813.	1-87-2
2448 821.	1-87-2
2463 186.	10-03-4
2474 178.	23-109-4
2480 316.	23-23-12
2480 317.	23-23-12
2480 318.	23-23-12
2480 319.	23-23-12
2485 019.	24-28-26
2485 020.	24-28-26
6000 003.	23-54-102
6000 004.	23-54-101
6000 070.	7-31-26
	15-03-5
6000 096.	23-31-33
6000 106.	23-103-18
6000 116.	23-14-52
6000 123.	15-11-3
6000 124.	7-08-16
6000 141.	23-39-12
6000 143.	23-64-34
6000 157.	23-64-34
6000 160.	12-04-12
	19-14-72
6000 165.	23-39-12
6000 173.	23-54-83
6000 174.	23-64-34
6000 177.	23-48-94
6000 182.	23-58-601
6000 209.	23-15-9
6000 211.	23-39-11
	23-41-9
6000 305.	23-54-87
6000 319.	23-58-607
6000 320.	23-58-605
6000 332.	22-20-89
6000 348.	23-96-8
6000 373.	23-86-3
6000 374.	23-64-247
6000 388.	23-58-335
6000 594.	23-19-178
6000 621.	23-92-7
6000 680.	23-58-242
6000 681.	23-58-242
6000 903.	23-102-3
6000 922.	23-86-16
6000 932.	15-03-60
6000 946.	23-33-86
6000 967.	23-22-151
6000 969.	23-33-86
6000 976.	23-33-86
6001 010.	23-58-603
6001 036.	23-22-151
6001 104.	7-16-37
6001 227.	7-16-37
6001 401.	23-96-8
6006 010.	8-55-209
	8-56-10
	8-57-11
6006 035.	23-36-123
6006 036.	8-55-209
	24-24-150
6006 043.	23-15-9
6006 047.	23-15-9
6006 052.	23-58-605
6006 065.	24-28-195
6006 071.	23-86-11
6006 086.	23-15-13

MyMopar.com

PART NUMBER	CODE
6006 093. .	23-58-607
6006 104. . .	12-02-12
	23-54-29
6006 106. . .	8-41-38
	8-56-25
	8-57-90
6006 119. . .	23-41-57
6006 120. . .	4-23-38
6006 121. . .	8-01-23
6006 172. . .	23-39-6
6006 204. .	23-58-605
6006 205. .	23-58-607
6006 216. .	23-58-606
6006 218. . .	8-47-14
6006 221. .	23-58-234
6006 222. .	23-58-245
6006 223. .	23-58-607
6006 224. .	23-58-603
6006 226. .	23-58-607
6006 227. .	23-58-607
6006 228. .	23-58-607
6006 229. .	23-58-607
6006 230. .	23-58-607
6006 231. .	23-58-607
6006 235. .	23-58-228
6006 237. .	23-58-607
6006 239. . .	23-39-11
6006 243. .	23-19-178
6006 244. .	23-64-247
6006 249. .	23-41-129
6006 261. . .	23-61-39
6006 264. . .	23-33-12
6006 296. . .	23-09-56
	23-64-275
6006 297. . .	8-57-13
6006 324. . .	8-47-79
6006 409. . .	23-09-56
	23-64-275
6006 451. . .	23-26-14
6006 456. .	13-66-123
6006 478. . .	8-47-131
6006 480. . .	7-16-54
6006 512. . .	23-64-83
6008 000. . .	23-47-35
6008 016. . .	23-06-15
6008 027. .	23-47-352
6008 032. .	23-22-160
6008 039. . .	23-33-12
6008 043. . . .	8-55-9
	8-56-52
6008 051. .	23-47-350
6008 070. . .	14-02-68
6008 076. . .	12-02-12
	15-14-1
6008 110. .	23-47-427
6008 111. . .	23-47-9
6008 126. .	23-47-352
6008 144. . .	1-48-267
	1-48-709
	14-11-3
6008 145. . .	1-48-267
	1-48-709
	4-25-15
6008 193. . .	23-84-3
6008 200. . .	23-33-86
6008 216. .	23-47-196
6008 217. .	23-108-144
6008 218. . .	8-47-14
	19-14-72
6008 220. . .	23-47-9
6008 222. . .	23-84-3
6008 243. . .	23-47-35
6008 245. .	23-33-110
6010 006. . .	7-08-16
	7-31-14
	8-01-25
	13-33-61
	13-35-1
	24-27-5
6010 020. . .	14-02-28
	23-33-12
	23-47-458
	24-24-5
6010 025. . .	13-66-18
6010 031. . .	12-02-5
	15-19-2
6010 035. . .	12-02-5
6010 037. . .	12-02-5
6010 043. . .	19-31-19
6010 060. . .	7-26-17
6010 061. . .	8-34-96
6010 094. . .	15-03-5
6010 155. . .	15-09-4
6010 226. . .	23-33-96
6012 008. .	13-66-135
6012 016. .	13-66-135
6012 031. . .	2-08-55
	2-10-17
6012 032. . .	19-31-19
6012 042. . .	9-46-107
	21-03-23
6012 049. . .	8-47-15
6012 054. . .	8-47-15
6012 065. . .	12-04-26
	13-33-68
6012 066. . .	12-04-12
6012 070. . .	13-66-15
6012 078. . .	12-07-3
6014 023. . . .	8-55-9
6015 014. . .	24-28-22
6015 143. . .	1-48-941
	15-14-1
	24-28-361
6015 159. . .	8-50-191
6015 216. . .	1-48-267
6015 235. . .	8-52-368
6015 242. . . .	8-01-7
6015 254. . .	1-48-709
6015 255. . .	1-48-709
6015 288. . .	8-15-32
6015 329. . .	8-56-35
6016 005. . .	23-45-56
6017 016. .	23-54-197
6017 018. . .	12-02-12
6022 006. . .	8-52-100
6022 007. . .	8-55-163
	23-36-123
6022 009. . .	12-06-6
6022 016. . .	12-01-12
	19-14-10
6022 029. . .	12-06-6
6022 031. . .	15-19-2
6022 037. . .	13-66-15
6022 047. . .	8-56-10
6022 056. . .	23-47-35
6022 072. . .	23-77-3
6022 117. .	23-58-606
6022 136. . .	17-23-57
6022 142. . . .	8-56-4
6022 147. . .	23-54-69
6022 149. . .	1-48-47
6022 153. .	23-48-116
6022 154. . .	8-50-337
6022 159. . .	8-34-96
6022 161. . .	21-42-16
6022 162. . .	7-16-38
	8-34-62
	8-55-9
	12-01-15
6022 169. . .	23-58-66
6022 185. . .	8-27-27
6022 187. . .	12-01-16
	15-19-2
6022 188. . .	15-09-22
6022 189. . .	15-09-22
6022 191. . . .	9-67-4
6022 193. . . .	7-26-8
6022 201. . . .	5-44-9
	7-08-15
	19-48-47
6022 226. . .	6-22-15
	9-23-5
	9-23-10
6022 227. . .	12-01-12
	12-04-12
6022 237. . .	12-01-12
	15-19-2
6022 242. .	23-48-166
6022 245. . .	19-14-35
6022 252. . .	6-09-11
6022 255. . .	13-54-4
6022 258. . . .	7-04-6
	21-03-23
6022 270. . .	15-19-2
6022 274. . .	1-48-388
6022 279. .	21-30-317
6022 287. . .	23-39-10
	23-48-166
6022 296. . .	8-56-41
6022 297. . .	23-39-10
6022 307. . .	4-25-21
	8-34-96
6022 308. . . .	7-11-4
6022 311. . .	17-19-10
6022 325. . .	7-33-12
6022 328. . .	12-04-12
6022 332. . . .	7-11-4
	23-19-114
6022 335. . . .	4-25-2
	4-25-21
6022 339. . .	13-66-20
	13-66-135
	19-14-10
6022 361. . .	12-04-12
6022 362. . . .	7-26-5
	13-54-4
	13-54-15
6022 381. . .	8-29-130
6022 503. . .	8-01-23
	13-35-1
6022 506. . .	7-08-15
	7-16-12
	7-26-34
	7-31-15
	7-33-12
	7-35-12
	8-34-96
	8-47-14
	8-47-130
	12-01-12
	12-04-12
	15-11-3
	15-11-46
	24-27-5
6022 508. . .	12-01-12
6022 525. . .	15-11-3
6022 530. . . .	7-26-5
	7-26-33
	7-26-34
	7-35-12
	12-01-12
	13-33-63
	13-33-68
	15-11-3
6022 531. . .	15-19-2
6022 532. . .	12-01-12
	12-04-12
	12-14-12
	15-19-2
6022 533. . .	15-19-2
6022 534. . .	12-01-12
	15-19-2
6022 536. . .	12-04-12
	15-19-2
6022 538. . .	12-01-12
6022 540. .	23-48-166
6022 562. . . .	7-26-5
6022 583. . .	21-138-7
6022 594. . .	8-55-209
6022 777. . .	13-33-63
6022 779. . .	7-26-34
	7-35-12
	12-01-12
6022 784. . .	12-01-16
6022 791. . .	23-21-50
6022 801. . .	22-20-87
6022 802. . .	7-16-12
	7-26-33
	7-31-15
	7-33-12
	8-32-18
	8-34-96
	12-01-12
	12-04-12
6022 808. . .	1-48-370
6022 809. . .	1-48-370
6022 816. . .	21-05-19
6022 817. . .	21-138-7
6022 820. . .	8-50-337
6022 823. . .	17-23-56
6022 826. . .	8-34-62
	23-21-65
6022 831. . .	17-23-57
6022 838. . .	23-14-27
6022 839. . .	23-48-11
6022 853. . . .	8-55-9
6022 854. . . .	7-26-5
6022 855. . .	23-15-9
6022 856. . .	8-50-337
6022 858. . .	23-14-41
6022 859. . .	21-05-19
	21-129-7
6022 869. . .	13-33-68
6022 870. . .	13-33-68
6022 891. . .	23-15-9
6022 893. . .	8-34-96
6022 894. . .	7-16-73
6022 895. . .	13-33-63
6022 899. . .	13-64-6
	13-66-20
6022 904. . .	13-66-15
6022 951. . .	7-16-12
	7-35-12
	8-34-96
6022 953. . .	8-55-209
6022 965. . .	8-55-159
6022 968. .	23-48-149
6022 988. . .	23-14-41
6022 992. . .	13-64-5
6023 011. . .	13-64-5
6023 012. . .	17-29-14
6023 020. . .	17-15-6
	17-17-5
6023 021. . .	17-15-6
6023 022. . .	19-15-30
6023 035. . . .	4-25-8
6023 036. . .	19-14-21
6023 039. . .	23-48-50
6023 044. . .	19-14-16
6023 045. . .	19-14-16

MyMopar.com

PART NUMBER	CODE
6023 046. . .	19-46-8
	21-30-2
6023 050. . .	6-50-34
6023 077. . .	8-34-96
6023 080. . .	8-55-10
6023 081. . .	8-55-10
6023 083. . .	19-31-19
6023 085. . .	19-48-45
6023 086. . .	19-48-45
6023 088. . .	19-14-23
6023 092. . .	7-08-15
6023 111. . . .	8-55-9
	8-56-4
	23-34-283
6023 112. . .	8-29-194
6023 117. . . .	6-24-3
6023 120. .	23-33-220
6023 133. . . .	5-58-2
6023 137. . .	13-64-6
	13-66-20
6023 138. . .	13-64-5
	13-66-15
6023 141. . .	8-50-337
6023 143. . .	21-03-23
6023 145. . . .	9-45-6
6023 146. . .	1-48-613
6023 148. . .	13-66-15
6023 159. . .	7-26-29
6023 170. . .	12-01-15
	12-04-26
6023 171. . .	7-35-13
	12-01-15
	12-04-26
	13-33-68
6023 175. .	23-32-104
6023 187. . .	21-03-23
6023 195. . .	1-48-599
6023 204. .	23-36-123
6023 227. . .	23-48-76
6023 231. . .	23-09-51
6023 246. . .	19-15-23
	19-15-33
6023 251. . .	8-50-307
6023 253. . .	8-32-18
6023 257. . .	12-02-5
6023 262. . .	1-48-88
6023 269. . .	8-47-15
6023 271. . .	8-47-131
6023 276. . . .	8-56-4
6023 282. . .	8-56-10
	8-56-41
6023 291. . .	12-01-16
6023 293. . . .	2-10-6
	2-10-7
6023 343. .	21-139-74
6023 346. . .	8-33-70
6023 349. . .	8-47-14
	8-47-130
6023 351. . .	8-47-77
6023 353. . .	9-64-17
6023 355. . .	21-119-3
6023 356. . .	8-50-337
6023 359. . .	12-01-16
6023 385. . .	14-25-12
6023 388. . .	23-91-6
6023 390. . .	8-55-209
6023 478. . .	8-34-62
6023 484. . .	15-19-2
6023 488. . .	8-55-159
6023 490. . .	8-50-130
6023 515. . .	21-04-6
6023 523. . .	13-36-5
6023 541. . .	8-58-61
6023 548. . .	14-73-1
6023 560. . .	21-04-12
	21-85-29
6023 561. . .	21-04-11
6023 587. . . .	9-43-4
6023 593. . .	22-20-87
6023 625. . .	8-34-96
6023 641. . .	7-17-15
6023 695. . .	23-09-64
6023 777. . . .	1-67-8
6023 899. . . .	8-52-5
6024 003. . .	1-48-613
6024 017. . .	12-01-12
6024 094. . .	8-34-96
6025 004. . .	13-35-1
6025 007. . .	11-02-4
6025 057. . .	8-50-337
6025 070. . .	19-48-21
	21-30-426
6025 071. . .	19-48-23
6025 081. . .	8-56-10
	8-57-11
6025 084. . .	6-52-10
6025 085. . .	7-16-12
6025 097. . .	14-11-23
9413 197. . .	23-20-20
9413 268. . .	23-34-85
9413 272. . .	8-56-10
	8-57-11
9413 316. . .	8-56-10
9413 433. . .	8-50-337
9414 111. . .	8-50-337
9414 327. . .	8-34-96
9414 711. .	23-04-205
9414 721. . .	24-26-21
9414 746. . .	23-08-76
9415 250. . .	23-33-96
9415 312. . .	23-06-53
9415 540. . .	8-56-10
9415 552. .	23-112-18
9415 558. . .	8-34-96
	23-34-283
9415 912. . .	8-50-337
9416 049. . .	8-56-10
9416 370. . .	8-37-389
9416 628. . .	8-50-337
9416 951. . .	8-55-10
9417 273. . .	14-24-4
9417 427. . .	8-56-10
9417 580. . .	8-55-10
9417 581. . .	8-55-10
9417 621. . . .	8-55-9
	8-56-4
9417 788. . .	8-50-337
9417 789. . .	8-50-337
9418 381. .	23-36-134

MyMopar.com

PART NUMBER	CODE	PART NUMBER	CODE	PART NUMBER	CODE	PART NUMBER	CODE	PART NUMBER	CODE

NOTES

MyMopar.com

VENDOR NUMBER CROSS REFERENCE LIST

Auto-Lite Sales Part No.	Chrysler
CONTACT SETS	
1-10	1879504
1-12	1109258
1-15	1394940
1-16	1879423
1-17	1879322
1-20	1879388
1-21	1343581
1-22	1274092
1-25	1843339
1-26	1658541
1-28	1658604
1-29	1663129
1-30	1663134
1-31	674236
1-32	1818568
1-33	1843370
1-40	2084077
1-41	2084076
1-42	2084639
1-43	2084080
1-44	2084075
1-45	2084074
1-46	2084078
1-47	2084079
CONDENSERS	
2-30	1818728
2-32	1818757
2-34	1881723
DISTRIBUTOR CAPS	
3-2	1126570
3-4	1343576
3-8	1658534
3-20	643687
3-21	652074
3-23	643822
3-24	1136522
3-26	641033
3-29	960552
3-37	2084677
DISTRIBUTOR ROTORS	
4-4	1343587
4-6	1530739
4-7	1658535
4-12	648434
4-15	643695
4-17	868096
4-18	641159
4-19	868095
4-20	960134
IGNITION COILS	
5-1	1818837
5-5	1818576
5-7	1627412
5-8	1818836
5-9	1818838
5-10	924053
5-26	1486147
5-46	1488209
VACUUM CHAMBERS	
6-6	1345474
6-7	1343590
6-8	1345473

Auto-Lite Sales Part No.	Chrysler
VACUUM CHAMBERS(Con't)	
6-9	1345383
6-15	1439671
6-16	1627234
6-17	1627262
6-18	1658620
6-19	1689773
6-20	1689765
6-21	1135574
6-29	1818569
6-32	1135576
6-34	1135577
6-36	1261011
6-42	1818648
6-44	1818642
6-46	1879283
6-47	1818652
6-49	1889539
6-50	1879314
BREAKER PLATES	
7-1	1089082
7-5	1308180
7-9	1752397
7-11	1692793
7-13	1658610
7-15	1663133
7-17	1658601
7-19	1663126
7-20	592475
7-21	921273
7-24	699295
7-25	959311
7-26	1089083
7-27	1195775
7-28	1274090
7-29	648408
7-30	592476
7-31	1138534
7-32	1311454
7-38	1818780
7-39	1843368
7-41	1843488
7-42	1843476
7-44	1818825
7-50	1843482
7-51	1843337
7-52	1843368
CIRCUIT BREAKERS	
9-4	628902
MISC. RELAYS	
9-20	1125916
9-22	1113099
9-23	1113084
9-24	1120526
9-25	1479522
9-26	1440445
9-28	1622221
9-29	1595341
9-30	1566372
9-31	1692684
9-32	1566350
9-33	1818856
9-35	1842546

Auto-Lite Sales Part No.	Chrysler
ARMATURES (GEN.)	
10-6	671474
10-7	648398
10-8	671492
10-9	1112913
10-11	673015
10-14	861435
10-17	859900
10-18	596888
10-20	860922
10-21	1089591
10-23	1689799
10-24	1392249
10-25	1689780
10-26	1689801
10-27	1266528
10-28	1627214
10-29	1627248
10-31	1253360
10-32	1495573
10-33	1268226
10-34	1473060
10-35	1495554
10-36	1571493
10-37	1605559
10-38	1266499
10-39	1266526
10-40	1479690
10-41	1605568
10-42	1605563
10-45	1268129
10-46	1662234
10-47	1752520
10-51	1605561
10-53	1658523
10-54	1568079
10-55	1662175
10-57	1689793
10-58	1689803
10-59	1658608
10-60	1658617
10-61	1752289
10-62	1879571
10-63	1889350
BRUSH SETS (GEN.)	
11-5	1262923
11-8	689929
11-11	673032
11-12	960544
11-14	678489
11-15	1843156
11-17	689930
11-20	1483960
11-22	2084291
11-23	962885
11-25	1253341
11-26	1402558
11-27	1253367
11-28	1605565
11-29	1661748
11-30	1402500
11-32	1658521
11-33	1502235
C. E. HEAD (GEN.)	
12-2	1089587
12-3	1262932

Auto-Lite Sales Part No.	Chrysler
C. E. HEAD (GEN.) (Con't)	
12-6	1531558
12-7	860491
12-10	1689779
12-11	1501791
12-13	1627247
12-14	1495542
12-15	1473057
12-16	1495553
12-17	1605558
12-18	1384081
12-20	1473061
12-21	1505842
12-22	1507941
12-23	1605566
12-24	1658529
12-25	1658597
12-26	1658522
12-27	1658526
12-36	2084861
FIELD COIL (GEN.)	
13-2	853744
13-6	916566
13-7	858269
13-8	858271
13-9	860919
13-10	861432
13-11	1253328
13-12	1391246
13-13	1253347
13-14	1266492
13-15	1266527
13-16	1266493
13-19	1499170
13-21	1568078
13-22	1658520
13-23	1889352
13-32	2084860
D. E. HEAD (GEN.)	
14-4	860492
14-6	594372
14-7	1253338
14-8	1384050
14-10	1571464
14-11	1253361
14-12	1269227
14-13	1527964
14-14	1527960
14-15	1266501
14-16	1266500
14-17	1266519
14-19	1495496
14-20	1527938
14-21	1527968
14-22	1658531
14-23	1658524
14-24	1662174
14-25	1658527
14-27	1689791
14-28	1818581
14-29	1843161
14-30	1889234
14-31	1879569
14-32	1889351
14-34	1889385
14-39	2084852

MyMopar.com

VENDOR NUMBER CROSS REFERENCE LIST

Auto-Lite Sales Part No.	Chrysler
SWITCHES	
15-5	1692658
15-6	1692659
15-7	648336
15-8	1121741
15-20	864888
15-21	871758
15-22	957467
15-23	1115382
15-24	1300507
15-25	1315970
15-27	1075941
15-28	1633166
15-29	1523128
15-30	1383605
15-32	1605435
15-36	1495598
15-37	1343694
15-38	1529144
15-39	1517558
15-40	1343695
15-42	1498878
15-43	641462
15-44	1390061
15-57	1818738
15-58	1075543
15-59	1075942
15-60	1889797
15-63	2084439
ARMATURES (STARTER)	
16-8	641443
16-10	927079
16-15	1138524
16-16	1300505
16-17	1343705
16-19	1383849
16-21	1523306
16-25	1605585
16-44	687379
16-47	1123019
16-55	1752421
16-56	1752386
16-57	1752368
16-59	1889375
16-60	1843384
16-64	1843383
16-65	1843385
16-74	2084429
16-75	2084658
BRUSH SETS (STARTER)	
17-2	1195774
17-3	1614933
17-8	927909
17-9	1069966
17-11	927910
17-13	595319
17-20	1538343
17-21	1843135
17-24	1605587
17-25	1658581
17-26	1658552
17-33	1311457
17-34	1345005
17-39	2084661

Auto-Lite Sales Part No.	Chrysler
STARTER CLUTCH	
18-2	1261401
18-3	1261402
18-4	1343708
18-6	1300522
18-9	1752374
18-10	1273427
C. E. HEADS (STARTER)	
19-4	641453
19-5	1123011
19-6	648340
19-7	636839
19-8	652102
19-10	1138525
19-12	1383848
19-15	1300516
19-16	1605584
19-17	1671301
19-19	1658554
19-28	1123018
19-32	1752366
19-38	2084662
FIELD COILS (STARTER)	
20-5	643827
20-6	930277
20-9	643830
20-10	643831
20-15	1752364
20-16	1300504
20-17	1752390
20-18	1665062
20-20	1300514
20-21	1300515
20-22	1265711
20-23	1300513
20-25	1605583
20-26	1658580
20-28	1658577
20-29	1658562
20-30	1662181
20-31	1658553
20-32	1879319
20-35	1123016
20-36	687372
20-37	927967
20-38	927968
20-39	1123017
20-43	1879574
20-50	1889614
20-53	2084660
20-54	2084668
PINION HOUSING	
21-10	927095
21-11	919950
21-17	1123012
21-28	1138528
21-29	1473339
21-30	1605551
21-31	1633168
21-32	1658556
21-33	1658558
21-35	1315966
21-38	1369646
21-39	1390063
21-40	1390064

Auto-Lite Sales Part No.	Chrysler
PINION HOUSING (Con't)	
21-42	1479104
21-44	1523305
21-45	1658575
21-47	1505929
21-48	1662224
21-50	1752388
21-58	1517559
21-59	1662167
21-61	1752392
21-62	1752377
21-63	1752380
21-64	1818744
21-67	1843320
21-68	1843321
21-71	1889376
21-74	1889262
21-91	1889796
21-93	2084436
21-94	2084431
21-96	2084663
21-97	2084669
STARTER YOKE	
23-1	1300510
23-2	1343709
23-3	1523299
23-4	1390062
23-6	1752373
BEARINGS	
24-1	1752381
24-3	636804
24-4	1752378
24-5	1402563
24-6	1440349
24-8	648906
24-9	2084265
24-12	1614929
24-15	592564
24-17	927093
24-23	652115
24-28	636845
LEADS & CONNECTORS	
26-1	1818566
26-2	1818660
26-5	1343583
26-7	1343582
26-8	1495568
26-9	1401009
26-10	1383958
26-11	1527974
26-12	1383959
26-14	1658602
26-15	1261010
26-16	677206
26-17	677205
26-19	699307
26-24	683363
26-28	1879348
26-29	1818730
26-31	1879564
TRANSMISSION CONTROLS	
27-1	689882
27-2	1112508
27-3	1126633

Auto-Lite Sales Part No.	Chrysler
TRANSMISSION CONTROLS (Con't)	
27-6	1479737
27-7	1370204
27-8	1297999
27-15	1473102
DIST. SHAFT & GOV.	
28-2	1818563
28-3	1818574
28-5	1383947
28-6	1473064
28-7	1473687
28-8	1505931
28-9	1508428
28-10	1509681
28-13	677156
28-14	1566347
28-15	953715
28-16	1269131
28-17	1436974
28-18	1390543
28-19	599633
28-20	1436975
28-21	1390532
28-22	1501756
28-24	1843376
28-29	1509678
28-43	1394900
28-48	869138
28-55	1818641
28-56	1818665
28-57	1818820
28-58	1889395
28-59	1889397
CAM & STOP PLATE	
29-6	1089081
29-10	1627242
29-11	1479529
29-12	1505930
29-13	1571398
29-14	1508812
29-15	1509676
29-16	1660504
29-17	1627233
29-18	1627228
29-19	1627239
29-20	1660501
29-21	1627261
29-26	1658545
29-27	1658548
29-28	1658543
29-29	1689771
29-30	1689776
29-31	1658621
29-32	1689769
29-33	1663125
29-34	1663131
29-35	1663135
29-55	859904
29-56	1568075
29-57	859907
29-58	1136535
29-59	1343588
29-60	599126
29-61	1138512
29-62	1135596

MyMopar.com

VENDOR NUMBER CROSS REFERENCE LIST

Auto-Lite Sales Part No.	Chrysler
CAM & STOP PLATE(Con't)	
29-64	959316
29-65	921275
29-66	861444
29-67	1818570
29-68	1818575
29-69	1818649
29-70	1818663
29-71	1818643
29-72	1818646
29-73	1752627
29-74	1818732
29-75	1818764
29-76	1818769
29-77	1752235
29-78	1843378
29-79	1879281
29-81	1879312
GEARS, COLLARS, COUPLINGS	
30-1	1594973
30-2	1300635
30-3	1262345
30-4	1262346
30-5	1265717
30-6	1540105
30-7	1540104
30-8	1818685
MISC. DISTRIBUTOR PARTS	
31-1	1235421
31-2	953717
31-5	1089090
31-6	1195769
31-7	1195770
31-8	1343585
31-9	1343591
31-10	1345705
31-11	1383641
31-12	1274087
31-13	1274088
31-14	1383953
31-15	1383954
31-16	1383946
31-17	643915
31-18	643892
31-19	960546
31-21	643896
31-22	643989
31-23	643893
31-24	643907
31-25	648400
31-26	648401
31-27	648404
31-28	1089084
31-29	1343594
31-30	1473688
31-31	643899
31-32	1407579
31-33	960548
31-34	1369774
31-35	643901
31-36	648246
31-37	648029
31-38	859903
31-39	958177
31-42	636899

Auto-Lite Sales Part No.	Chrysler
MISC. DIST. PARTS (Con't)	
31-43	691707
31-44	691709
31-45	691708
31-46	691710
31-47	1689788
31-48	1195772
MISC. IGNITION PARTS	
32-1	1688207
32-3	1818729
32-6	1818839
32-7	867119
32-9	920368
32-14	1842000
MISC. REGULATOR PARTS	
33-1	126049
33-3	1394893
33-4	928551
PULLEY FANS	
34-1	1370320
34-2	1383658
34-5	1479176
34-6	1479182
34-8	1479852
34-9	1479853
34-10	1495318
34-13	1540846
34-14	1505368
34-15	1505907
34-16	1505916
34-19	1565346
34-20	1565347
34-21	1565785
34-22	1565881
34-23	1565888
34-24	1565886
34-25	1565890
34-27	1507931
34-28	1508413
34-39	1540847
34-40	1889371
34-41	1889373
34-42	1540845
34-43	1889372
34-48	1922614
34-49	1922613
34-55	1263560
34-56	1194599
34-59	1136932
34-60	1126616
34-61	1263488
34-62	1264952
34-63	1319434
34-65	1320117
34-66	1264986
34-67	1889398
MISC. GENERATOR PARTS	
35-1	113702
35-2	1274093
35-4	674927
35-5	1253349
35-6	674930
35-7	671477
35-8	636796

Auto-Lite Sales Part No.	Chrysler
MISC. GEN. PARTS (Con't)	
35-9	636800
35-10	648392
35-11	674939
35-12	40654
35-13	1253362
35-14	671481
35-15	695627
35-16	674936
35-17	673014
35-18	683358
35-19	683357
35-20	1138481
35-21	636815
35-22	1266520
35-23	1253348
35-24	1253344
35-25	1253346
35-26	1266497
35-27	1627277
35-28	859901
35-29	636810
35-30	674943
MISC. PARTS (STARTER)	
36-3	1532985
36-4	927092
36-5	1121742
36-6	1266543
36-7	1121743
36-8	1138526
36-10	641445
36-13	636840
36-14	648387
36-18	636825
36-19	1501797
36-21	636817
36-22	1343710
36-23	1369645
36-25	1671288
36-26	1343706
36-27	1273430
36-28	1752360
36-29	1752361
36-30	641444
36-32	687366
36-33	120393
36-34	1123014
36-35	641446
36-36	672641
36-37	1383663
36-38	1818777
MISC. PARTS (SWITCHES)	
37-1	652122
37-6	636884
37-7	861499
37-8	636863
37-9	861500
WIPER MOTORS	
38-1	1505322
38-3	1568077
38-4	1622403
38-5	1595003
38-7	1627384
38-9	1627380
38-12	974467

Auto-Lite Sales Part No.	Chrysler
WIPER MOTORS (Con't)	
38-13	1239453
38-14	1261499
38-15	1261498
38-16	1495163
38-17	1788676
38-18	1788675
MISC. WIPER PARTS	
39-1	1704421
39-3	1505326
39-4	1568051
39-5	1879600
39-6	1568050
39-12	1622012
39-13	1622011
39-14	1658486
39-16	1622436
39-17	1879341
39-18	1704072
39-19	1704744
39-20	1704068
39-21	1704067
39-22	1770698
39-23	1605601
39-24	1605610
39-25	1605609
39-26	1622010
39-27	1622009
39-28	1648064
39-30	1605425
39-31	1658757
39-33	1704711
39-34	1770870
39-35	1658349
39-36	1658348
39-38	1658420
39-42	1770707
39-43	1818890
39-45	1261446
39-46	1261447
39-47	1263468
39-48	1263469
39-49	1886203
39-50	1370004
39-51	1370010
39-52	1370009
39-53	1479946
39-55	1540465
39-56	1540520
39-57	1838291
39-58	1842407
39-59	1838292
39-60	1841680
39-61	1841679
39-62	1886222
39-63	1886224
39-64	1838935
39-65	1838934
39-66	1838936
39-68	1233532
39-69	837999
SMALL MOTORS	
40-1	1603324
40-3	1605379
40-4	1622498
40-5	1626847

MyMopar.com

VENDOR NUMBER CROSS REFERENCE LIST

Auto-Lite Sales Part No.	Chrysler
SMALL MOTORS (Con't)	
40-6	1642435
40-7	1642434
40-8	1436729
40-9	1495282
40-10	1879579
MISC. ARMATURES	
41-1	1605570
41-2	1605593
41-3	1605597
41-4	1658583
41-5	1658586
41-6	1605576
41-10	1658592
41-11	1752653
41-12	1300634
41-13	1262365
41-14	1479685
41-15	1818813
41-16	1818878
41-17	1818879
41-19	1627272
MISC. BRUSHES	
42-1	866773
42-2	1605594
42-4	1658585
42-5	1605573
42-6	1627271
42-7	1265745
42-8	860937
42-10	958163
42-11	1308473
42-13	1752517

Auto-Lite Sales Part No.	Chrysler
MISC. HARDWARE ITEMS	
43-1	120614
43-2	43761
43-3	120391
43-4	131094
43-5	131095
43-6	131096
43-7	131098
43-8	103905
43-9	106750
43-10	122159
43-11	132900
43-12	121540
43-13	131015
43-14	111873
43-15	132930
43-16	134566
43-17	131949
43-18	131958
43-19	132105
43-20	132919
43-21	120214
43-22	120367
43-23	121801
43-25	120368
43-26	1264047
43-27	131870
43-29	120611
DISTRIBUTORS	
44-5	930366
44-10	1193314
44-16	1479588
44-20	1274066
44-21	1274116
44-24	1479139
44-25	1626661
44-26	1626656
44-27	1501786
44-29	1648685
44-30	1642392
44-31	1922670
44-42	1881943
44-42	1889305
44-44	1788688

Auto-Lite Sales Part No.	Chrysler
GENERATORS	
45-4	853770
45-8	E71258M
45-9	1136934
45-11	1495199
45-12	1604834
45-15	1257392
45-16	1263971
45-17	1479175
45-18	1504760
45-19	1540596
45-20	1505824
45-21	1604825
45-22	1605400
45-23	1264054
45-27	1642005
45-30	1770755
45-31	1798760
45-32	1920845
STARTING MOTORS	
46-5	1071819
46-7	1070939
46-8	1067335
46-10	1922641
46-11	1268125
46-13	1473558
46-14	1889260
46-16	1535557
46-18	1311459
46-19	1268126
46-20	1604480
46-24	1658033
46-25	1627289
46-26	1627290
46-45	1941107
46-46	1941117
SPEEDOMETER, FRAME, ROTOR, ODOMETER	
48-1	589890
48-8	1604702
48-25	1798619
MISC. SPEEDOMETER PARTS	
49-4	1263532

Auto-Lite Sales Part No.	Chrysler
SPRINGS	
50-1	1752362
50-2	1605571
50-3	1818571
50-4	864912
50-6	958161
50-7	1818684
50-9	1818647
50-10	1818644
50-11	1818667
50-12	1818736
50-14	671490
50-15	1818822
50-16	960173
50-17	674935
50-18	1843155
50-19	1345517
50-20	1843379
50-21	1879287
50-22	1627279
50-23	1308183
50-24	1879321
50-25	1879320
50-27	1110964
50-28	1627263
50-29	852026
50-30	1627231
50-31	959310
50-32	1067297
50-34	1689772
50-35	1879282
50-37	1308243
50-38	1689774
50-40	674959
50-45	1879292
50-46	1627243
50-48	1308182
50-49	1627229
50-52	1658622
50-56	1879310
50-57	1879323
50-58	671505
50-62	1889496
50-63	1889519
50-64	1889538
50-65	636841
50-67	1889548
50-68	1889608
50-70	2084087
50-75	592565
50-81	2084681

MyMopar.com

AUTO-LITE

VENDOR NUMBER	CHRYSLER NUMBER
4-GS-125	1594 767
4-GS-150	1540 373
4-GS-200	1555 285
4-S-165	1436 277
4-S-250	1565 337
6-12-33-51	1391 399
6-12-34-51	1391 398
8-12-6-45	1122 921
A-5	1406 647
A-7	1075 955
A-9	691 672
A-11	964 402
A-32A	1889 521
A-42B	1889 520
A-52B	1889 522
A-3897 K 427	1929 343
A-14908 A	1798 596
ADM-5	1889 295
AG-3 B	1889 712
AG-4	2095 755
AG-32	2095 675
AG-52	2095 289
AGR-2	1841 500
AGR-4 S	1553 043
AGR-8 S	1614 216
AGR-31	1648 989
AGR-32	1689 297
AGR-41	1658 910
AGR-42	1658 852
AGR-45	1553 043
AGR-51	1568 040
AGR-52	1689 073
AGR-82	1704 305
AGR-85	1614 216
AL-7	691 673
AR-5	1257 587
AR-5 S	1268 988
AR-6	1568 039
AR-8 A	1658 844
AR-8 S	1450 160
AR-10	1479 185
AR-31	1889 465
AR-32	1753 672
AR-41	1662 273
AR-42	1658 851
AR-51	1568 039
AR-52	1658 850
AR-80	1658 844
AR-82	1658 843
ARL-8	1265 760
AT-4	1262 988
AT-8	1262 986
ATR-42	2095 255
C-16-25	2084 108
C181-101	1826 583
CAC-4001	1595 023
CAE-4002	1627 412
CAF-4001	1843 324
CAG-33	1842 000
CAG-4001	1688 210
CAH-4001	1688 212
CAH-4001 SS	1843 324
CAJ-4001	1672 746
CAK-4001	1672 793
CAL-4001 SS	1818 837
CAM-4001	1818 840
CB-1805	1390 260
CB-5777	1390 619
CB-6134	854 798
CB-13940	1122 887
CB-15238	1345 574
CB-17363	1390 624
CB-17379	1273 969
CB-17423	1390 625
CB-17435	1390 616
CB-17437	1273 353
CB-17443	1390 621
CB-17449	1390 009
CB-17766	1390 626
CB-17768	1390 026
CB-17770	1390 623
CB-18994	1390 622
CB-24778	1648 133
CE-308 A	1271 779
CE-1187 DQS	578 506
CE 1187 FNS	1191 544
CE-2260 AQS	868 587
CF-4013	924 053
CT-4002	1394 885
CT-4004	1612 741
CW-11	1326 546
CW-2015 A	1326 553
CW-4001 T	1401 015
CW-4002	1672 746
CY-4002	1394 885
DA-60 A	1404 671
DK-23 C	1253 343
DO-561 AX	1318 994
EBA-2 A	1109 698
EBA-39	1473 219
EBA-79	1110 992
EBA-87	1134 138
EBA-1213	927 083
EBA-1225	927 084
EBA-2006	927 086
EBA-2007	1495 571
EBA-2008	927 088
EBA-2105	927 091
EBA-3307	1495 571
EBB-20	1473 219
EBB-20 A	2240 286
EBB-26 A	1532 984
EBB-32 A	1550 078
EBB-53	1752 387
EBB-69	2084 438
EBB-70	2084 664
EBB-76	1889 938
EBB-79	2095 397
EBB-832	1473 219
EC-41	1154 359
ED-15602	1842 522
EGGJ-2001 S	1501 791
EMA-4002	1627 166
EMB-4001	1627 146
EMD-47	1540 383
EMD-4003 B	1540 366
EMG-40	1527 831
EMG-106	1505 326
EMG-1087 R	1540 371
EMG-1109 L	1571 233
EMG-1110 R	1571 232
EMG-2006	1527 945
EMG-4102 B	1540 122
EMG-4105	1505 322
EMJ-2024	1818 503
EMJ-2026	1818 505
EMJ-4104	1648 342
EMK-4101	1540 123
EMK-4105	1509 627
EMM-4002	1603 324
EMP-40	1604 243
EMP-43 R	1594 973
EMP-62	1568 051
EMP-1053	1568 052
EMP-1063	1568 050
EMP-1065	1568 049
EMP-4101	1568 077
EMU-1057	1604 023
EMU-1060	1626 946
EMU-1071 L	1622 012
EMU-1071 R	1622 011
EMU-1078 L	1658 486
EMU-1085	1622 435
EMU-1089	1622 436
EMU-2047	1879 341
EMU-4101	1622 403
EMZ-32	1642 029
EMZ-40	1594 992
EMZ-53	1594 995
EMZ-54	1594 993
EMZ-59	1752 662
EMZ-63	1605 068
EMZ-64	1605 605
EMZ-65	1605 607
EMZ-66	1605 602
EMZ-72	1605 606
EMZ-74	1752 663
EMZ-1085	1605 524
EMZ-1089	1605 425

MyMopar.com

VENDOR NUMBER CROSS REFERENCE LIST

AUTO-LITE

VENDOR NUMBER	CHRYSLER NUMBER
EMZ-2003	1752 664
EMZ-4001	1595 003
EOC-11930	1502 255
EOC-11931	1502 256
EOP-14576	1770 732
EPA-4001 S	1622 498
EPC-4001	1626 847
EPF-64	1658 351
EPF-67	1658 350
EPF-1005	1752 665
EPF-1070 R	1658 348
EPF-1070 L	1658 349
EPF-2002	1752 666
EPF-4001	1627 384
EPG-4001	1627 146
EPH-2006	1658 592
EPH-4101	1627 380
EPH-4102	1662 302
EPH-4103	1788 675
EPJ-4003	1642 434
EPJ-4102	1753 856
EPK-28	1818 889
EPK-4201	1769 459
EPS-1005	1879 344
EPT-4005	1788 676
EPV-25	1818 806
EPV-26	1818 807
EPV-34	1818 808
EPV-49	1752 513
EPV-50	1769 565
EPV-64	1753 712
EPV-72	1753 711
EPV-75	1704 440
EPV-78	1818 809
EPV-94	1770 290
EPV-95	1770 289
EPV-1005	1818 810
EPV-1060	1704 072
EPV-1062	1819 075
EPV-1070 L	1704 068
EPV-1070 R	1704 067
EPV-1071 L	1704 711
EPV-1071 R	1770 698
EPV-1076 L	1779 677
EPV-1076 R	1779 584
EPV-1117	1704 744
EPV-2002	1818 811
EPV-2003	1818 812
EPV-2006	1818 813
EPV-4001	1770 336
EPV-4001 A	1770 337
EPV-4001 C	1779 860
EPV-4001 D	1838 932
EPV-4001 E	1842 408
EPV-4001 F	1886 123
EPV-4001 G	1842 964
EPW-1005	1818 876
EPW-1060	*1770 870
EPW-1070 L	1704 743
EPW-1070 R	1770 707
EPW-2002	1818 877
EPW-2002 A	1879 342
EPW-2006	1818 878
EPW-4001	1770 882
EPW-4001 B	1838 937
EPX-53	1753 174
EPZ-4001	1753 234
EPZ-4004	2093 843
EPZ-4101	1753 870
ERA-4001	1779 055
ERC-2005	1879 416
EW-103	837 999
EWD-62	1273 472
EWD-115	837 999
EWF-12	1495 533
EWG-20 A	1843 157
EWJ-43 L	1262 345
EWJ-43 R	1262 346
EWJ-64	1390 521
EWJ-91	1194 585
EWJ-132	1233 531
EWJ-142	1272 410
EWJ-1090	1194 581
EWJ-1097 R	1310 543
EWJ-1117	1310 656
EWJ-1120 L	1310 654
EWJ-1120 R	1310 661
EWJ-1141 L	1370 210
EWJ-1141 R	1370 209
EWJ-1158	1495 605
EWJ-1162 RA	1540 371
EWJ-1162 LA	1540 372
EWJ-1167	1540 145
EWJ-2056	1262 366
EWJ-2072	1540 475
EWJ-2143	1390 519
EWJ-2154	1495 606
EWJ-4002	1261 036
EWJ-4007 A	1436 660
EWJ-4011	1272 340
EWK-43	1265 717
EWK-74	1660 965
EWK-100	1261 446
EWK-100 A	1261 447
EWK-1015	1261 454
EWK-1085	1263 468
EWK-1090	1263 469
EWK-2006	1265 731
EWK-2071	1265 732
EWK-2072	1265 736
EWK-4101	1261 499
EWK-4102	1261 498
EWM-2006	1308 472
EWM-4001	1300 526
EWO-4001	1343 472
EWR-43	1540 105
EWR-43 R	1540 104
EWR-1026 A	1439 662
EWR-1026 B	1473 111
EWR-1071	1436 242
EWR-1072	1370 004
EWR-1099 L	1370 023
EWR-1099 R	1370 022
EWR-1100 L	1383 507
EWR-1100 R	1383 506
EWR-2082	1495 353
EWR-2096 S	1479 946
EWV-4001	1383 349
EWW-4001	1436 729
EWY-1085 F	1540 466
EWY-1085 G	1540 522
EWY-1085 H	1540 524
EWY-1097 LA	1540 150
EWY-1097 RA	1540 149
EWY-1098 LA	1540 369
EWY-1098 RA	1540 368
EWY-1116 F	1540 520
EWY-1116 G	1540 523
EWY-1117 C	1540 521
EWY-4004	1495 163
EX-88454	1343 488
EXH-119705	1769 891
EXP-53	1753 174
F5-3276-P-16	1934 350
FA-31 S	1313 837
FB-4002 S	1637 367
GAA-35 A	1273 382
GAR-73	636 796
GAR-95	648 359
GAR-171	648 392
GAR-221 A	1273 438
GBG-24 M	1405 151
GBG-49 C	1405 143
GBG-56 D	1405 149
GBG-57 B	1405 147
GBG-66 B	1405 137
GBG-560	1405 149
GBG-1056 F	1405 148
GBJ-25	674 931
GBM-2012 AS	689 929
GBM-2065 F	671 474
GBW-34	671 481
GBW-45	671 490
GBW-45 A	1110 952
GBW-69	695 627
GBW-73	695 629
GBW-1024 N	1138 490
GBW-2012 CS	1550 087
GBW-2052 FM	1112 913
GBY-34 C	1405 142
GBY-38 A	674 919
GCD-24	1136 568
GCD-2012 S	960 544

MyMopar.com

AUTO-LITE

VENDOR NUMBER	CHRYSLER NUMBER
GCE-24	674 944
GCE-40	916 572
GCE-40 B	1405 138
GCE-53	674 935
GCE-2002 S	1262 932
GCP-2052 FM	1138 489
GCP-2105 FM	1531 572
GCT-25	683 358
GCY-25	683 357
GDJ-23 B	1405 139
GDJ-63 D	1404 672
GDJ-73 B	1405 150
GDJ-1073	919 871
GDJ-1073 B	1405 146
GDJ-1973 B	1405 146
GDJ-2012 CS	1502 235
GDJ-2062 FT	1405 144
GDJ-2065 F	916 581
GDJ-2074 BS	1405 141
GDJ-4808	918 720
GDW-44	1138 481
GDZ-1002 A	860 491
GDZ-1003	860 492
GDZ-1007	858 270
GDZ-1007 A	1135 607
GDZ-1008	858 271
GDZ-1008 B	1323 951
GDZ-1064 A	1320 488
GDZ-2006 F	859 900
GDZ-2057 F	596 888
GDZ-2094 AS	1320 486
GDZ-4801 S1	853 770
GDZ-4802 S1	595 316
GDZ-4820 M	1123 539
GDZ-4822 S1	1138 509
GE-48	661 647
GEA-34	859 899
GEB-29	916 588
GEB-2006 F	860 922
GEB-6001 S-1	1194 650
GEF-1008 C	1138 483
GEF-2006 F	2084 290
GEF-4901 M	E-71 260-M
GEF-4902 M	E-71 261-M
GEF-4903 M	1323 917
GEF-4904 M	1323 918
GEF-5003	1889 606
GEW-31	120 396
GFM-18 A	131 954
GFR-56 A	1405 145
GFY-1007 A	1253 329
GFY-1008 A	1253 331
GFY-2093 F	1689 799
GFY-2101 F	1391 249
GFY-2107 F	1689 780
GFY-2108 F	1689 801
GG-164	636 815
GGA-20	1253 327
GGA-70	1253 336
GGA-1005 A	1391 246
GGA-1055	1769 460
GGA-1068	1253 338
GGA-1084	1571 464
GGA-1086	1818 749
GGA-2102 S	1689 779
GGA-6001 N-S1	1663 097
GGA-6002 S1	1658 865
GGA-6003 S1	1658 861
GGA-6005 S1	1662 147
GGA-6008 S1	1661 773
GGA-6010 S1	1658 865
GGE-1003	1112 915
GGE-1004 A	1112 920
GGE-4804 M	E-71 258-M
GGE-4805 M	E-71 259-M
GGE-4807 M	1311 471
GGF-9	1266 520
GGF-13	1266 524
GGJ-2012 S	1253 341
GGJ-2021 S	1501 791
GGJ-2101 AF	1627 214
GGJ-2103 F	1384 049
GGJ-2104 F	1473 063
GGJ-2107 F	1627 248
GGJ-6001 S1	1136 931
GGJ-6002 S1	1263 554
GGJ-6004 S1	1440 393
GGJ-6005 S1	1540 429
GGJ-6007 S1	1390 077
GGJ-6008 S1	1604 843
GGU-33	1253 355
GGU-38A	1402 563
GGU-40 A	1818 775
GGU-1002 A	1253 358
GGU-1003	1253 361
GGU-1003 D	1879 569
GGU-1007	1253 351
GGU-1007 A	1483 977
GGU-1008 A	1483 978
GGU-1045	1269 227
GGU-1064 A	1889 351
GGU-1065	1527 960
GGU-2002 S	1495 542
GGU-2006 F	1253 360
GGU-2012 AS	1402 588
GGU-2012 S	1253 367
GGU-2042 F	1495 573
GGU-2046 F	1268 226
GGU-2048 S	1473 057
GGU-2054 F	1473 060
GGU-2070 S	1605 558
GGU-2071 F	1605 559
GGU-6001 S1	1136 934
GGU-6002 S1	1262 334
GGU-6004 S1	1440 394
GGU-6005 S1	1479 730
GGU-6006 S1	1495 199
GGU-6012-S1	1507 928
GGW-40	1271 164
GGW-71	120 392
GGW-83	1610 386
GGW-87	1552 859
GGW-88	1552 885
GGW-1003	1266 500
GGW-1005 J	2098 079
GGW-1008	1266 493
GGW-1024	1266 502
GGW-1031	1266 519
GGW-1078	1527 938
GGW-1082	1527 968
GGW-2002 AS	1402 559
GGW-2002 S	1384 081
GGW-2006 F	1266 499
GGW-2006 FT	1402 565
GGW-2012 S	1605 565
GGW-2032 F	1266 526
GGW-2045 F	1479 690
GGW-2046 F	1505 843
GGW-2047 S	1505 842
GGW-2079 S	1507 941
GGW-2089 S	1605 566
GGW-2090 F	1605 568
GGW-2098 F	1605 563
GGW-6001 AT	1330 240
GGW-6001 S	1257 392
GGW-6001 S1	1504 760
GGW-6001 SN	1257 392
GGW-6001 T-S1	1330 241
GGW-6002 S1	1263 971
GGW-6004 T-S1	1326 562
GGW-6005	1479 730
GGW-6005-T-S1	1401 004
GGW-6008-S1	1479 175
GGW-6011 S1	1504 760
GGW-6012 S1	1540 596
GGW-6013 S1	1505 824
GGW-6014-S1	1540 820
GGW-6016 S1	1604 825
GGW-6019 S1	1550 577
GGY-45	1345 517
GGY-45 A	1402 564
GGY-2012 S	1402 500
GGY-2012 BS	1661 748
GGY-2017 BS	1610 378
GGY-3080 S	1610 383
GGY-3080 BS	1692 763
GGZ-1064 A	1889 351
GGZ-2006 F	1268 129
GGZ-2046 F	1507 942
GGZ-6001 M-S1	1321 751
GGZ-6001-S1	1264 054

MyMopar.com

VENDOR NUMBER CROSS REFERENCE LIST

AUTO-LITE

VENDOR NUMBER	CHRYSLER NUMBER
GGZ-6002-S1	1506 324
GHA-15	1273 439
GHA-35	1273 446
GHA-36	1273 447
GHA-37	1273 444
GHA-38	1273 432
GHA-39	1273 448
GHA-40	1273 449
GHA-41	1273 450
GHA-42	1273 451
GHA-47 S	1394 888
GHA-53	1273 454
GHA-1004 S	1273 437
GHA-1044	1273 455
GHA-1052	1273 440
GHA-2006 FT	1273 445
GHA-2012 S	1273 441
GHA-4802 UT	1268 963
GHB-1003	1879 495
GHB-2006 F	1402 501
GHB-2046 F	1879 494
GHB-4801 S1	1323 901
GHB-4802 S1	1842 609
GHC-1007	1402 493
GHC-1008	1402 494
GHC-6003 S1	1610 368
GHC-6004 T-S1	1612 704
GHF-1007	1483 986
GHF-1007 A	1499 171
GHF-1008	1483 987
GHF-1008 A	1499 172
GHF-2006 F	1818 560
GHF-2006 AFT	1555 268
GHF-3006 FM	1483 989
GHF-6001 M-S1	1321 752
GHG-2048 FM	1612 734
GHM-1003 A	1889 349
GHM-2006 F	1752 520
GHM-2034 F	1879 568
GHM-2042 F	1499 173
GHM-2045 F	1889 350
GHM-2046 F	1752 408
GHM-2059 F	1752 289
GHM-2071 F	1605 561
GHM-2074 F	1843 209
GHM-6001	1770 747
GHM-6001 S1	1753 624
GHM-6003-SN1	1704 272
GHM-6007-S1	1704 267
GHM-6008-S1	1787 869
GHM-6010 S1	1770 747
GHM-6011 S1	1779 960
GHM-6012 S1	1787 869
GHM-6013 S1	1787 870
GHM-6015 S1	1704 265
GHM-8002 S1	1842 773
GHM-8004 S1	1842 776
GHM-8005 S1	1842 779
GHP-2001 S	1555 264
GHP-2002 AS	1818 559
GHP-6002 T-S1	1532 976
GHR-20	1818 824
GHR-20 B	2084 289
GHR-1003	1610 380
GHR-1003 B	2084 293
GHR-1003 C	2275 561
GHR-1005	1610 377
GHR-2006 FM	1630 647
GHR-2081	1630 645
GHR-4801 M	1535 579
GHR-4801 NM	1616 642
GHR-4802 M	1535 591
GHR-4802 NM	1616 643
GHU-2006 FM	1610 379
GHU-4801 M	1553 022
GHU-4801 NM	1616 645
GHU-4802 M	1553 023
GHU-4802 NM	1616 644
GHW-1005	1612 726
GHW-1005 B	2084 298
GHW-2002 S	2084 292
GHW-2006 AF	2084 299
GHW-2006 FM	1612 729
GHW-3017 S	2084 300
GHW-4802-M	1553 026
GHW-4809	1889 481
GHW-4810	1889 483
GHX-4802 M	1550 610
GHX-4803	1889 827
GHX-4804	1889 829
GJ-20	1300 503
GJ-20 C	2084 659
GJC-19	1658 529
GJC-38 A	2084 265
GJC-39	1752 692
GJC-41	1627 278
GJC-50	1658 597
GJC-1005	1568 078
GJC-1007 A	1752 645
GJC-1008 A	1752 646
GJC-1019	2196 328
GJC-1031 A	2196 329
GJC-1050	2084 855
GJC-1057 A	1889 385
GJC-1061	2084 264
GJC-1061 A	2275 570
GJC-1111 A	1889 234
GJC-1111 B	2084 852
GJC-1111 C	2240 293
GJC-1112	1843 161
GJC-1112 A	2196 326
GJC-2001 C	2240 290
GJC-2002 A	2084 861
GJC-2002 B	2240 292
GJC-2012 AS	1843 156
GJC-2012 BS	2084 291
GJC-2030 F	1658 523
GJC-2030 FT	2240 291
GJC-2032 F	1568 079
GJC-2044	1658 526
GJC-2047 F	1661 749
GJC-2048 F	1662 175
GJC-2055 F	1689 793
GJC-2056 F	1689 803
GJC-2058 F	1879 571
GJC-2059 F	1889 353
GJC-2060	2084 263
GJC-2090 F	1658 608
GJC-2098 F	1658 617
GJC-6002-S1	1565 827
GJC-6003-S1	1568 355
GJC-7002-S1	1770 755
GJC-7003-S1	1642 005
GJC-7005-S1	1787 871
GJC-7006-S1	1642 009
GJC-7009-S1	1569 860
GJC-7010-S1	1662 153
GJC-7012 S1	1770 755
GJC-7013 S1	1779 945
GJC-7014 S1	1787 871
GJC-7017 S1	1941 108
GJC-7401 T-61	2095 498
GJC-8001 S1	1842 771
GJM-1005	1889 352
GJM-1005 C	2084 860
GJM-7003 S1	1920 845
GJM-8001 S1	1842 800
GJM-8201 A	2095 070
GJM-8202 S1	2095 072
GJM-8203 S1	2095 417
GJU-1049	2298 786
GJS-2002 A	2275 560
GJO-2002	2275 569
GJO-1045	2298 785
GJU-2056 F	2298 784
GJU-2063 F	2275 562
GJU-3030 F	2275 568
GJU-3063 F	2275 559
GJU-7501	2095 365
GJU-7502	2095 364
GJU-7503 S1	2095 633
GK-20 A	673 009
GK-20 C	1404 560
GK-215	120 395
GTC-1112	1843 161
GY-20 C	1689 907
H-11133	1232 664
HA-4029	866 103
HA-4032	1089 619
HA-4035	1188 465
HA-4101	1565 848

MyMopar.com

VENDOR NUMBER	CHRYSLER NUMBER
HAB-4027	1622 475
HAB-4028	1622 476
HAB-4603	1540 264
HAB-4604	1540 263
HAB-4617	1523 540
HAD-1028	1838 278
HAD-1032 L	1779 474
HAD-1032 R	1779 473
HAD-1033 L	1753 101
HAD-1033 R	1753 100
HAD-2042	1753 059
HAD-4027	1622 484
HAD-4627	1627 303
HAD-4628	1627 302
HAD-4729	1660 936
HAD-4733	1658 822
HAD-4734	1658 821
HAD-4901	1664 986
HAD-4906	1779 471
HAE-4523 AA	1627 303
HAE-4523 BB	1627 302
HAF-4516 BB	1523 541
HAF-4523 AA	1605 186
HAF-4523 BB	1605 185
HD-4102	1565 842
HR-43	652 398
HRM-4002	1538 314
HRM-4102	1113 084
HRM-4104	1594 487
HRS-4001	1120 526
HRT-4001 A	1479 522
HRU-4001	1343 488
HRV-4001	1370 235
HRW-4001 A	1440 445
HRZ-4001 L	1495 223
HRZ-4001 R	1495 222
HRZ-4002	1473 791
HX-4003 UT	1268 969
IAD-8	1089 089
IAD-10	1089 090
IAD-12	1089 089
IAD-1014 M	1483 967
IAD-1100 RH	1089 081
IAD-2004	1089 082
IAD-2004 B	1134 140
IAD-4039-1	930 366
IAD-4040-1	1109 760
IAE-4001 M	1075 920
IAK-8	696 043
IAK-4002-1 M	1119 565
IAL-4001 1M	1123 056
IAL-4004 1M	1119 564
IAO-10	1195 769
IAO-11	1195 770
IAO-13	1345 583
IAO-17	1267 367
IAO-17 M	1323 924

AUTO-LITE

VENDOR NUMBER	CHRYSLER NUMBER
IAO-1003	1235 421
IAO-2004	1195 774
IAO-2004 M	1323 925
IAO-4109-1 M	1321 787
IAO-4110-1 M	1323 899
IAO-4112-1 M	1326 533
IAO-4113-1 M	1326 532
IAO-4114-1 M	1321 788
IOA-4115-1 M	1321 789
IAO-4116-1	1193 314
IAO-4116 A-1	1265 811
IAP-9	1269 181
IAP-3004 R	1261 008
IAR-8	1244 738
IAR-1003	1126 570
IAT-6	1343 585
IAT-14	1343 583
IAT-24 R	1343 582
IAT-30	1383 641
IAT-51	1495 568
IAT-52	1495 565
IAT-81 RD	1879 348
IAT-81 RE	2084 865
IAT-81 RF	2240 254
IAT-81 RK	2275 581
IAT-1033	1343 576
IAT-2004 RA	1343 578
IAT-2004 RD	1752 397
IAT-2023 G	1343 590
IAT-2050 R	1692 793
IAT-2050 RC	1692 793
IAT-3076 DS	1881 723
IAT-3076 JS	2279 949
IAT-3076 SS-2	1881 723
IAT-4012	1479 588
IAU-1016 A	1343 587
IAU-1066	1390 137
IAU-2058	1271 760
IAU-2058 S	1500 968
IAU-3076 AS	2196 327
IAU-3076 L	1271 766
IAU-4005 UT	1268 976
IAU-4007 UT	1391 376
IAU-4016 UT	1633 145
IAU-4017 UT	1550 585
IAU-4018 UT	1550 584
IAW-24	1401 009
IAX-2046 M	1323 946
IAX-4004-1 M	1323 933
IAX-4005-1 M	1321 786
IAY-7	1274 087
IAY-8	1274 088
IAY-9	1274 089
IAY-1004	1274 090
IAY-2019	1818 672
IAY-2019 A	1818 816
IAY-2019 B	1818 780

VENDOR NUMBER	CHRYSLER NUMBER
IAY-4003-1	1274 066
IAY-4003 B-1	1507 456
IAY-4004-1	1274 116
IAY-4004 C-1	1788 688
IAY-4101-1	1788 688
IAY-4104-1	1788 688
IAZ-10	1383 958
IAZ-1002 R	1383 947
IAZ-1002 RB	1752 328
IAZ-1002 RC	1818 563
IAZ-1002 RD	1843 040
IAZ-1004 RA	1689 784
IAZ-1021 R	1439 670
IAZ-1021 RE	1571 398
IAZ-1021 RG	1509 676
IAZ-1021 RP	1627 261
IAZ-1025 RA	1818 641
IAZ-1025 RB	1843 038
IAZ-1026 R	1473 687
IAZ-1026 RA	1505 931
IAZ-1026 RB	1818 574
IAZ-1026 RC	1843 033
IAZ-1028 R	1818 820
IAZ-1036 L	1843 376
IAZ-1036 LA	1879 313
IAZ-1037 L	1879 392
IAZ-1038 R	1879 390
IAZ-2004 R	1658 610
IAZ-2004 RA	1658 610
IAZ-2023 RA	1439 671
IAZ-2023 RB	1627 234
IAZ-2023 RC	1627 262
IAZ-2023 RD	1658 620
IAZ-2023 RE	1689 773
IAZ-2023 RF	1689 765
IAZ-2040 LS	2084 080
IAZ-2040 R	2084 077
IAZ-2040 RS	2084 076
IAZ-4001 A	1479 139
IAZ-4001 B	1479 139
IAZ-4001 C	1540 552
IAZ-4001 E	1626 661
IAZ-4001 F	1641 707
IAZ-4001 G	1658 989
IAZ-4002	1383 290
IAZ-4002 B	1595 305
IAZ-4002 C	1626 658
IAZ-4002 D	1626 659
IAZ-4003 A	1540 809
IAZ-4003 C	1626 656
IAZ-4003 D	1641 956
IAZ-4003 F	1641 956
IAZ-4003 G	1641 740
IAZ-4003 H	1658 870
IB-654 S	1879 282
IBB-2014 M	1558 133
IBB-2040 D	1663 133

MyMopar.com

VENDOR NUMBER CROSS REFERENCE LIST

AUTO-LITE

VENDOR NUMBER	CHRYSLER NUMBER
IBB-2040 M	1532 968
IBB-4001 A-1M	1321 761
IBB-4101-1M	1486 190
IBB-4101-B-1	1616 631
IBB-4102-1	1402 600
IBB-4102 A-1M	1402 503
IBB-4103 A	1501 786
IBB-4105 A	1612 742
IBB-4105 B	1634 193
IBB-4106 A-1	1507 047
IBB-4107-1	1555 284
IBB-4108	1507 048
IBC-1035	1486 159
IBC-4018 UT	1550 590
IBC-4019 UT	1551 878
IBC-4021 UT	1633 140
IBC-4024 UT	1633 140
IBD-4008 UT	1555 289
IBD-4009 UT	1555 288
IBD-4014 UT	1633 141
IBE-1001	1401 001
IBF-27	1530 735
IBF-1003	1530 737
IBF-1066	1530 739
IBF-4001 AUT	1633 157
IBF-4001-UT	1409 647
IBF-4002 BUT	1634 224
IBF-4002 CUT	1612 723
IBF-4002-UT	1614 217
IBG-4001 UT	1558 149
IBH-4001 UT	1610 349
IBJ-8	1658 538
IBJ-24	1658 602
IBJ-1021 RN	1752 235
IBJ-1021 RU	1818 769
IBJ-1048 R	1658 603
IBJ-2048 R	1658 601
IBJ-4301	1642 387
IBJ-4301 A	1688 647
IBJ-4301 B	1688 649
IBJ-4302 C	1704 261
IBJ-4302 D	1704 262
IBJ-4303	1648 685
IBJ-4303 C	1704 260
IBK-388 CS	2084 866
IBK-1003	1658 534
IBK-1003 B	2084 654
IBK-1016	1658 535
IBK-1027 R	1818 665
IBK-2001 B	1818 668
IBK-4101 F	1643 392
IBK-4103 G	1642 387
IBK-4301 A	1642 392
IBK-4301 C	1704 309
IBK-4302	1704 310
IBK-4304	1689 325
IBM-1040	1663 128
IBM-2004 RA	1843 476
IBM-2004 RC	2240 252
IBM-2040	1663 126
IBM-2041 A	1843 368
IBM-4001	1663 025
IBM-4001 B	1664 956
IBM-4101	1785 139
IBM-4101 A	1792 703
IBM-4101 B	1793 772
IBM-4102	1787 878
IBM-4104	1787 055
IBM-4106 S	1889 891
IBM-4108 A	2098 085
IBM-4109	2095 900
IBO-4001 A-1	1664 970
IBO-4002-1	1663 189
IBO-4003	1665 020
IBP-17	1818 566
IBP-17 A	1818 660
IBP-17 B	1818 730
IBP-361 BS	1889 496
IBP-2004 RA	1843 482
IBP-2004 RS	1818 567
IBP-2023 LB	2084 085
IBP-2023 RA	1818 652
IBP-2023 RC	1818 642
IBP-2040 L	2084 079
IBP-2040 R	2084 078
IBP-2041 B	2275 580
IBP-2209 LA	1889 396
IBP-2209 R	1818 575
IBP-2209 RH	1818 772
IBP-3028 AS	1818 568
IBP-3028 BS	1843 370
IBP-4001	1689 320
IBP-4001 A	1779 943
IBP-4002	1689 319
IBP-4002 A	1770 750
IBP-4002 B	1779 940
IBP-4002 C	1788 638
IBP-4002 D	1779 952
IBP-4002 E	1841 511
IBP-4002 F	1841 514
IBP-4002 H	1798 640
IBP-4002 J	1922 670
IBP-4003	1689 318
IBP-4003 A	1779 938
IBP-4003 C	1779 951
IBP-4003 E	1842 602
IBP-4003 J	1889 305
IBP-4003 PS	2084 843
IBP-4005 B	1842 803
IBP-4005 E	2095 679
IBP-4006	1842 804
IBP-4006 C	1889 564
IBP-4006 D	1889 485
IBR-2050 RA	1818 825
IBS-2004 L	1843 337
IBS-2004 R	1752 628
IBS-2004 RA	1843 488
IBS-4003	1779 937
IBS-4004	1779 941
IBS-4005 A	1841 518
IBS-4006 B	1779 983
IBS-4006 C	1842 810
IBS-4006 F	2095 680
IBS-4007	1838 822
IBS-4007 A	1841 515
IBS-4008	1841 498
IBS-4009	1841 417
IBS-4010	1842 811
IBS-4010 A	1842 805
IDM-2040 A	2275 563
IG-88	1126 640
IG-90	643 892
IG-514	643 896
IG-636 HS	852 026
IG-636 MS	1627 237
IG-636 NS	959 310
IG-636 QS	1067 297
IG-636 XS	1473 689
IG-636 YS	1752 236
IG-637 AS	2084 681
IG-644 A	1530 741
IG-654 S	1879 282
IG-694 A	1109 790
IG-776 AS	1818 669
IG-884 CS	1879 292
IG-884 DS	1879 310
IG-1456	643 917
IGB-199	643 904
IGB-208 CS	1308 243
IGB-208 DS	1889 548
IGB-234 S	2240 253
IGB-266 BS	1843 379
IGB-278 CS	2084 887
IGB-281 S	2275 201
IGB-292 SS	674 959
IGB-316 BS	2084 657
IGB-329 S	1527 980
IGB-336 DS	2084 679
IGB-342 CS	1889 608
IGB-349 BS	2084 087
IGB-353 BS	1308 182
IGB-361 CS	2084 678
IGB-369 AS	1889 519
IGB-374 AS	1843 155
IGB-374 BS	1879 320
IGB-374 CS	1879 321
IGB-376 AS	1818 822
IGB-379 BS	1879 308
IGB-379 DS	2084 889
IGB-381 BS	2275 227
IGB-385 AS	1818 667

MyMopar.com

VENDOR NUMBER	CHRYSLER NUMBER
IGB-386 S	1818 736
IGB-388 CS	2084 866
IGB-2023 RB	1627 234
IGC-117	648 030
IGC-154 AS	1658 622
IGC-175 B	1473 688
IGC-198 AS	1879 287
IGC-198 S	1614 913
IGC-200 AS	1692 795
IGC-200 BS	1818 654
IGC-214 S	2084 301
IGC-1107 S.	643 822
IGC-1123 C	1136 522
IGC-2148 A	592 475
IGC-2148 G	1136 533
IGC-2168 R	1271 768
IGC-4510-1 M	1124 876
IGC-4511-1 M	1124 874
IGC-4515 A-1	1266 945
IGC-4517-1	1261 411
IGC-4518 A-1	1509 668
IGE-29 AS	1818 571
IGE-29 BS	1818 576
IGH-28	643 899
IGH-1041	1136 550
IGL-9 A	1369 774
IGP-30	643 912
IGP-1003	641 033
IGP-1016 B	868 096
IGP-2004 B	674 963
IGP-3028 A	674 236
IGP-3028 ES	699 291
IGP-4402 B	1071 821
IGP-4507-1 M	1125 894
IGS-17	643 901
IGS-19 S	643 903
IGS-99	859 903
IGS-104	860 939
IGS-148	1135 588
IGS-181	1261 010
IGS-796 S	1527 968
IGS-1016 B	868 095
IGS-1082 RS	1311 454
IGS-1092 RS	1253 292
IGS-1100 R	859 904
IGS-1100 RA	859 907
IGS-1100 RAJ	1343 588
IGS-1100 RA-5	1568 076
IGS-1100 RQ	1135 596
IGS-1100 RW	959 316
IGS-1100 RX	921 275
IGS-1112 R	953 715
IGS-1112 RE	1390 543
IGS-1112 RK	1818 778
IGS-1113 R	599 633
IGS-1113 RD	1436 975
IGS-1113 RE	1390 532

AUTO-LITE

VENDOR NUMBER	CHRYSLER NUMBER
IGS-1145 RA	1509 678
IGS-2224 L	2084 074
IGS-2224 R	2084 075
IGS-3004	699 295
IGS-3004 B	699 294
IGT-11 A.	677 206
IGT-69	1843 381
IGT-70	863 095
IGT-117	958 177
IGT-1021 R	1308 242
IGT-1021 RN	1308 242
IGT-1072 RE	1407 588
IGW-3028 AS.	1879 388
IGW-3028 BS	1343 581
IGW-3028 DS	1274 092
IGW-3028 ES	1394 940
IGW-3028 JS	1843 339
IGW-3028 KS	1658 541
IGW-3028 MS	1658 604
IGW-3028 NS	1663 129
IGW-3028 PS	1663 134
IGW-3028 RS	1879 423
IGW-3028 VS.	1879 504
IGZ-1003 A	960 552
IGZ-1016	960 134
K-703.	1826 568
K-11427	1826 574
KIT-9	1056 039
KIT-30	1056 041
KIT-31	1056 040
KIT-42	1064 633
L-6300 C-2	1122 921
L-6301 C	1140 836
L-8192-2	1594 936
LM-7795-2	1479 521
MAB-12 A	1614 940
MAB-31	1121 742
MAB-31 A	1135 578
MAB-85	1121 743
MAB-1024 N	1109 742
MAB-1024 NS	1550 079
MAB-2012 CS	1614 933
MAB-2012 DS	1614 940
MAB-2012 GS	1532 990
MAB-2012 HS	1614 933
MAB-2012 JS	1614 940
MAD-96	641 445
MAD-110	636 840
MAJ-20.	1300 503
MAK-61 A	1110 989
MAW-12	636 838
MAW-13	636 820
MAW-24	641 457
MAW-35	636 822
MAW-37	636 825
MAW-130	927 093
MAW-161	1112 379

VENDOR NUMBER	CHRYSLER NUMBER
MAW-1009 B	643 827
MAW-1010 B.	930 277
MAW-2002 F	1123 011
MAW-2012 S.	927 909
MAW-2030	641 443
MAW-2064	648 333
MAW-2069 M	112 947
MAW-2128	927 079
MAW-2129	927 092
MAW-2148	919 949
MAW-2160	1112 380
MAW-2179 M	1134 127
MAW-2206	1195 776
MAW-3132	871 754
MAW-3132 A	1261 402
MAW-4008	1071 819
MAW-4008 M	1113 864
MAW-4029	1070 939
MAW-4032	1070 939
MAW-4041	1113 121
MAX-35	636 817
MAX-47	927 078
MAX-1007 D.	1300 513
MAX-1007 F.	1300 513
MAX-1008	643 830
MAX-1078 B.	1558 156
MAX-2002	636 839
MAX-3005 AS	1300 513
MAX-3098	1261 401
MAX-3098 A	1261 402
MAX-4048	670 662
MAX-4050	868 857
MAX-4062	1075 951
MAY-11	1069 993
MAY-31 C	1662 182
MAY-36	853 754
MAY-1008 A	852 058
MAY-1009 A	852 059
MAY-1010	1069 993
MAY-2012 AS	927 910
MAY-2030	648 012
MAY-4114 A.	918 151
MAY-4114 B.	918 151
MBD-1007 S	1269 242
MCH-25 A	1390 057
MCH-53	1138 527
MCH-62	1300 509
MCH-63	1300 506
MCH-76	1343 711
MCH-90	1402 587
MCH-1009 B.	1138 521
MCH-1009 C.	1265 707
MCH-1009 E.	1665 062
MCH-1010 B.	1138 522
MCH-1010 C.	1265 708
MCH-1010 E.	1665 062
MCH-1024	641 457

MyMopar.com

VENDOR NUMBER CROSS REFERENCE LIST

AUTO-LITE

VENDOR NUMBER	CHRYSLER NUMBER
MCH-1051	1138 526
MCH-1074 D	1658 579
MCH-2002 C	1138 525
MCH-2002 F	1383 848
MCH-2002 J	1550 084
MCH-2002 K	1692 752
MCH-2028	1138 524
MCH-2039	1300 505
MCH-2056	1300 510
MCH-2059	1265 709
MCH-2064	1265 032
MCH-2070	1343 705
MCH-2070 A	1402 586
MCH-2074	1343 709
MCH-2074 B	1479 692
MCH-2074 C	1523 299
MCH-2074 E	1633 159
MCH-2088	1383 849
MCH-2088 A	1692 753
MCH-2088 M	1532 983
MCH-2098	1390 065
MCH-2099	1390 062
MCH-2110	1523 306
MCH-3005 ES	1665 062
MCH-3005 KS	1665 062
MCH-3030 C	1692 760
MCH-6201	1473 558
MCH-6205	1473 558
MCH-6208 M	1535 558
MCJ-39 A	1369 642
MCJ-39 B	1369 642
MCL-53	1523 304
MCL-63	1614 923
MCL-65	1616 653
MCL-102	1614 926
MCL-103	1614 927
MCL-127	1752 375
MCL-129 A	1889 379
MCL-132 A	1889 381
MCL-1010 D	1265 712
MCL-2030	1300 516
MCL-2030 A	1558 137
MCL-2030 C	1402 584
MCL-2030 D	1532 982
MCL-2095	1507 060
MCL-2114 S	1616 625
MCL-3005 CS	1300 513
MCL-3075	1343 708
MCL-3098 A	1300 522
MCL-6107	1311 459
MCL-6109	1343 692
MCL-6110	1268 126
MCL-6111	1268 128
MCL-6112	1323 911
MCL-6115 T	1330 243
MCL-6117	1473 187
MCL-6121 A	1527 689
MCL-6124	1503 784
MCL-6126	1392 684
MCL-6127 M	1405 190
MCL 6128 M	1405 191
MCL-6201 M	1488 216
MCL-6202	1630 683
MCL-6202 M	1535 559
MCL-6203 M	1535 560
MCL-6308	1558 155
MCL-6309	1616 627
MCS-12	1394 973
MCS-46	1343 706
MCS-46 A	1273 429
MCS-47 A	1273 430
MCS-48	1271 780
MCS-53	1273 423
MCS-57	1271 788
MCS-61	1271 781
MCS-62	1271 789
MCS-63	1271 790
MCS-64	1271 791
MCS-66	1271 782
MCS-67	1271 792
MCS-69	1271 793
MCS-71	1271 783
MCS-73	1271 794
MCS-76	1271 784
MCS-77	1273 424
MCS-78	1273 419
MCS-1002	1271 774
MCS-1012 S	1538 343
MCS-1034 S	1394 974
MCS-1040	1273 420
MCS-1049	1271 785
MCS-1060	1273 421
MCS-1065	1271 786
MCS-1072	1273 425
MCS-1073	1271 787
MCS-1278	1271 775
MCS-2006 F	1271 778
MCS-2012 S	1271 776
MCS-2050	1273 426
MCS-2079 S	1394 972
MCS-2079 S-1	1500 972
MCS-3075	1273 427
MCT-1010	1323 906
MCT-2046 S	1550 623
MCT-2070	1671 293
MCT-2079 M	1614 212
MCT-2088 M	1550 624
MCT-3005 BS	1672 727
MCT-6101	1317 790
MCT-6103	1401 014
MCT-6104	1323 915
MCT-6105 M	1486 137
MCT-6106 M	1486 138
MCZ-49	1394 988
MCZ-61	1555 272
MCZ-62	1394 978
MCZ-64	1501 821
MCZ-66	1394 979
MCZ-70	1394 981
MCZ-71	1394 982
MCZ-73	1394 986
MCZ-77	1394 989
MCZ-1060	1394 987
MCZ-1065	1394 983
MCZ-1069	1394 980
MCZ-1073	1394 985
MCZ-1074	1394 990
MCZ-2006 F	1394 975
MCZ-2050	1394 991
MCZ-2073	1501 822
MCZ-2097 F	1889 382
MCZ-4004 T	1630 660
MCZ-4103 T	1484 001
MCZ-4109 T	1677 294
MDC-40	1671 310
MDC-2012 BS	1671 317
MDC-2012 CS	1671 306
MDC-6302	1508 761
MDC-6303 T	1630 656
MDD-34	1752 378
MDD-1005 AS	1658 580
MDF-16	1752 698
MDF-25	1752 695
MDF-26	1658 561
MDF-27	1658 574
MDF-30	1818 502
MDF-31	1752 699
MDF-1002	1658 554
MDF-1005 AS	1658 577
MDF-1005 BS	1662 178
MDF-1005 S	1658 562
MDF-2006	1658 563
MDF-2012 S	1658 552
MDF-6001	1642 140
MDF-6003	1569 178
MDF-6007	1658 033
MDF-6015	1665 053
MDG-1005 AS	1662 181
MDG-1005 S	1658 553
MDG-6001	1627 289
MDG-6002	1627 290
MDG-6003	1569 176
MDL-23	1752 360
MDL-24	1752 361
MDL-25	1752 362
MDL-1002	1752 366
MDL-1005 S	1752 364
MDL-1064	2084 665
MDL-2006	1752 368
MDL-2012 AS	1843 135
MDL-2012 CS	2084 661
MDL-2012 DS	2240 268

MyMopar.com

AUTO-LITE

VENDOR NUMBER	CHRYSLER NUMBER
MDL-2046	1752 421
MDL-2048	1889 375
MDL-2048 B	2240 266
MDL-2049	2084 871
MDL-2070 S	1843 383
MDL-2076 S	1843 384
MDL-2084	2084 429
MDL-2085	2084 658
MDL-2088	1752 386
MDL-2088 A	2084 890
MDL-2089	2196 323
MDL-2098 S	1843 385
MDL-3123	1752 374
MDL-3132 A	1889 378
MDL-6013	1779 955
MDM-1005 S	1752 390
MDT-1002	2084 662
MDT-1002A	2240 269
MDT-1005 AS	2084 660
MDT-1005 S	1879 319
MDT-2005 S	1889 614
MDT-2085 C	2240 267
MDT-6001	1779 955
MDT-6003	1842 562
MDT-6005	1922 635
MDT-6009	1922 641
MDT-6010	1941 107
MDT-6011	1941 117
MDT-6012	1941 118
MDT-6018	2095 829
MDT-7004 T	2095 496
MDT-7009 S	2095 393
MDT-7101	2095 179
MDU-34	2196 325
MDU-1005 AS	2084 668
MDU-1005 S	1879 574
MDU-6003	1889 260
MDU-7006	1889 955
MDU-7013	2095 296
MDV-2005 S	2084 437
MEC-20	2084 872
MEC-3061	2084 875
MG-77A	652 115
MP-41 A	636 845
MU-54 J	1134 130
MU-54 L	1383 663
MW-20 A	641 454
MZ-12 D	1402 583
MZ-19	636 841
MZ-19 A	1110 986
MZ-19 C	1402 585
MZ-175	959 467
MZ-293	1752 385
MZ-2012 AS	1311 457
MZ-2012 BS	1345 005
MZ-2012 DS	1402 602
MZ-2105 B	1123 018
MZ-2108	687 379
MZ-2211	1123 019
NG-10902 T	1188 955
NG-11134 D	1232 666
NG-11453 T	1260 734
NG-11455 T	1260 739
NG-11456 T	1260 747
NG-11457 T	1260 738
NG-11468 T	1260 745
NG-11471 T	1244 508
NG-11484 D	1244 505
P-6	1189 473
PS-651	1850 557
PS-1100	648 334
PS-1194	919 950
PS-1223	1075 947
PS-1234	1110 000
PS-1250	1135 587
PS-1250A	1134 136
PS-1252	1123 012
PS-1291	1138 528
PS-1291 A	1473 339
PS-1291 C	1550 080
PS-1291 D	1550 620
PS-1291 E	1605 551
PS-1291 G	1658 556
PS-1291 H	1658 558
PS-1291 L	1752 388
PS-1291 M	1752 392
PS-1291 V	1889 376
PS-1291 X	1889 796
PS-1294	1265 710
PS-1294 A	1265 713
PS-1294 B	1315 966
PS-1299	1273 431
PS-1301	1369 646
PS-1302	1390 063
PS-1302 A	1390 064
PS-1309 A	1479 104
PS-1309 B	2084 431
PS-1312	1394 992
PS-1316	1523 305
PS-1316 B	1658 575
PS-1316 C	1752 377
PS-1319	1505 929
PS-1319 A	1662 224
PS-1319 B	1818 744
PS-1325 A	1633 160
PS-1325 B	1889 380
PS-1325 C	2084 436
PS-1332	1662 167
PS-1338	1752 380
PS-1342	1843 320
PS-1343	1843 321
PS-1350	1889 262
PS-1354	2084 663
PS-1355	2084 669
PS-1361	2084 874
PS-1364	2196 324
PS-1405	2298 754
PU-6	1370 320
PU-25	1402 504
PU-26	1402 507
PU-34	1440 396
PU-46	1479 178
PU-52	1405 213
PU-52 A	1405 214
PU-52 B	1405 215
PU-52 C	1405 216
PU-52 D	1405 217
PU-52 E	1405 218
PU-54	1479 182
PU-60	1479 852
PU-61	1479 853
PU-67	1495 318
PU-88	1504 806
PU-90	1502 703
PU-101	1500 336
PU-102	1540 843
PU-104	1505 907
PU-142	1565 346
PU-143	1565 347
PU-145	1565 881
PU-146	1565 888
PU-147	1565 886
PU-149	1565 890
PU-163	1550 578
PU-167	1508 413
PU-194	1704 263
PU-243	1889 848
PU-244	1889 372
PU-245	1889 371
PU-248	1889 373
PU-249	1842 610
PU-251	1922 614
PU-252	1922 613
PU-274	1889 398
PU-537	1889 946
PU-544	2095 384
PU-1004	1345 973
PU-1007	1370 314
PU-1014	1383 502
PU-1017	1345 974
PU-1041	1473 213
PU-1041 A	1550 595
PU-1049	1405 220
PU-1071	1523 274
PU-1073	1523 268
PU-1115	1594 597
PU-1183	1689 304
PU-1216	1841 519
PU-1227	1770 746
PU-1253	1842 521
PU-1254	1842 781

MyMopar.com

VENDOR NUMBER CROSS REFERENCE LIST

AUTO-LITE

VENDOR NUMBER	CHRYSLER NUMBER
PU-1255	1842 777
PU-1255 A	1889 544
PU-1256	1842 795
PU-1564	2095 872
PU-1575	2095 677
PU-4004	1818 839
PW-1003	1553 007
RAA-4001 A	1494 798
RAD-4002 L	1627 165
RAH-4001	1566 350
RAH-4002	1626 929
RAH-4003	1843 490
RAM-4001	1842 550
RAM-4002	1842 546
RD-19-300	1631 490
SAA-1043	1550 100
SAA-4002 T	1555 270
SAA-4004 T	1630 660
SAD-39	1752 371
SAD-1022	1658 565
SAD-1022 A	2084 430
SAD-4001	1658 985
SAD-4501	1889 799
SAD-4502	2084 439
SAE-4002	1692 659
SAE-4005	1889 797
SAE-4005 T	2240 272
SAF-4001	1752 340
SAG-4001	1818 738
SAH-4001	1665 052
SAJ-33	2084 873
SAJ-4002	2084 876
SAK-4001	2240 537
SGA-31	1648 009
SGA-32	1648 007
SGA-1055	1769 460
SGA-4003	1605 069
SGA-4013	1769 457
SP-270	583 180
SP-471 B	1194 651
SP-700	1138 511
SP-782	1113 862
SP-783 A	1090 485
SP-784	1113 233
SP-843	1123 540
SP-887	1263 560
SP-894	1194 599
SP-904	1126 616
SP-939	1263 488
SP-959	1311 469
SP-959 A	1402 509
SP-964	1264 966
SP-965	1262 993
SP-966	1268 983
SP-974	1319 434
SP-976	1320 117
SP-983	1264 986
SP-983 A	1264 986
SP-994 P2	1473 596
SP-1272 A	1450 760
SP-1294 A	1265 713
SP-1299	678 495
SP-1311	585 854
SP-1889	1136 924
SP-1913	1136 935
SP-1936	1257 393
SP-1936 A	1402 510
SP-1949	1297 974
SP-1954	1264 943
SP-1977	1319 443
SP-4016	924 065
SPS-224	1689 598
SPS-1105 AG	926 080
SPS-1105 BB	1089 709
SPS-1105 BJ	1163 782
SPS-1105 BK	860 195
SPS-1105 BM	920 402
SPS-1105 BP	910 562
SPS-1105 BS	1260 731
SPS-1105 E	859 992
SPS-2099	595 372
SPS-2099 B	595 366
SPS-2105 H	926 079
SPS-2157 E	1257 335
SPS-2157 F	595 372
SPS-2209 A	1501 745
SPS-2223 B	1689 077
SPS-2235 A	1819 948
SPS-2235 C	1819 957
SPS-2235 D	1819 960
SPS-2235 E	1819 981
SPS-2235 G	1819 990
SPS-2235 H	1819 939
SPS-2235 N	1819 972
SPS-2235 O	1819 960
SPS-2235 R	1819 975
SS-54	652 122
SS-176	861 494
SS-239	1315 968
SS-2124	675 955
SS-2124 E	861 499
SS-2124 M	1315 967
SS-2124 N	1323 909
SS-3035 RAE	1115 389
SS-3035 RAH	1315 969
SS-3070 R	636 863
SS-3070 RD	861 500
SS-4001	648 336
SS-4003	1121 741
SS-4020	927 081
SS-4204 A	863 124
SS-4214	1323 908
SS-4704	871 758
SS-4705	957 467
SS-4706	1115 382
SS-4707	1300 507
SS-4708	1315 970
SSA-1043	1550 100
SSP-4001 M	1075 941
SSP-4003 M	1488 227
SSR-4002 M	1553 029
SSS-4003	1126 633
SST-4007	1383 605
SST-4013	1605 435
SSX-13	1752 372
SSX-22	1345 006
SSX-25	1345 021
SSX-26	1345 018
SSX-57	1479 683
SSX-1004	1495 598
SSX-1024	1495 598
SSX-4002	1495 598
SSX-4003	1495 598
SSX-4004	1529 144
SSX-4101	1343 695
SSX-4103	1671 279
SSX-4103 T	1402 588
SSX-4104	1633 158
SSY-1043	1404 639
SSY-4002	1498 878
SSY-4101	1671 312
SSY-4101 T	1402 599
SSY-4102	1671 294
SSY-4102 T	1616 654
SW-213	1689 763
SW-634	120 387
SW-634	120 392
SW-764 S	1501 797
SW-2813	641 462
SW-2827	1390 061
TG-22	958 336
TG-88	1126 640
TG-2075 D	1297 999
TGE-1003 L	1527 958
TGE-4010	1479 737
TGG-4001	1370 204
VAD-116 A	1273 383
VAD-117 A	1273 384
VAD-166 A	1273 461
VAD-176	1273 462
VAD-1118	1273 385
VAV-1022	1406 639
VAV-7006 AT	1532 966
VBA-4202 A	1343 122
VBA-4203 A	1268 222
VBC-2	1273 463
VBC-18	1273 473
VBC-19	1273 464
VBC-21	1273 465
VBC-22	1273 474
VBC-23	1273 363

MyMopar.com

AUTO-LITE

VENDOR NUMBER	CHRYSLER NUMBER
VBC-25	1273 364
VBC-30	1273 466
VBC-31	1273 467
VBC-40	1273 365
VBC-42	1273 366
VBC-46	1273 469
VBC-47	1273 367
VBC-57	1394 890
VBC-64	1394 892
VBC-1016	1273 470
VBC-1029	1273 386
VBC-1036 A	1273 368
VBC-1040 S	1273 471
VBC-1044	1273 369
VBC-1052	1394 889
VBC-1055	1273 374
VBC-1061	1273 376
VBC-1080	1273 377
VBC-3008	1273 375
VBC-3070	1273 381
VBC-3071	1273 390
VBC-4002 UT	1268 962
VBF-6001 A	1343 122
VBF-6002 A	1343 124
VBF-6005 T	1534 162
VBJ-6001 AT	1486 145
VBO-4202 AC	2095 200
VBO-4202 BC	1889 944
VBO-4202 CC	2095 341
VBO-4202 CTC	2095 499
VBO-4202 HC	2095 202
VBO-4202 JC	2095 203
VBO-4202 KC	2095 204
VBO-4202 LC	2095 205
VBO-4202 MC	2095 206
VBO-4402 ATC	2095 207
VBO-4602 AC	2095 208
VBO-4602 BC	2095 209
VBO-4602 BTC	2095 210
VBO-4602 EC	2095 211
VBO-4602 FC	2095 212
VBO-4602 GC	2095 213
VBO-4602 KC	2095 214
VBO-4602 LC	2095 215
VBO-4602 MC	2095 216
VC-45	691 712
VC-167	1527 977
VC-175	1818 668
VC-178	1818 650
VC-179	1818 645
VC-1039 A	1135 574
VC-2082 R	1135 576
VC-2117 R	1135 577
VC-3147	1261 011
VLB-3173 L	1753 707
VLB-3173 R	1753 706
VP-19	137 423
VRA-15	927 950
VRA-16	927 951
VRA-17	927 952
VRA-46	928 566
VRA-1060 A	1273 380
VRB-4003 T	1798 550
VRH-51	1402 513
VRH-4103 A-1	913 344
VRH-4104 D1	913 344
VRH-7107 B-1T	1401 019
VRP-100 D	1273 388
VRP-100 E	1273 389
VRP-100 K	1394 891
VRP-4303 DM	1571 164
VRP-6004 B	1323 902
VRS-6001 AM	1321 758
VRS-6003 AM	1109 771
VRU-6001 AM	1553 027
VRU-6002 AM	1553 028
VRU-6002 BM	1550 579
VRW-6003 AM	E-71249-M
VRW-6004 BM	1535 592
VRW-6006 AM	1553 024
VRW-6007 AM	1553 030
VRX-6003 A	1496 058
VRX-6003 C	1660 457
VRX-6001 A	1323 923
VRY-4203 F	922 487
VRY-4203 G	922 487
WLB-8	6006 065
WLB-9	1383 351
WLB-12	1256 337
WLB-94	1440 596
WLB-110	1540 188
WLB-111	6008 110
WLB-168	1689 167
WLB-179	6006 070
WLB-2124 L	1604 904
WLB-2124 R	1604 903
WLB-2172 L	1753 837
WLB-2172 R	1753 836
WLB-3022 LS	1658 769
WLB-3022 RS	1658 768
WLB-3079 L	1473 017
WLB-3090 LB	1604 451
WLB-3090 LH	1704 715
WLB-3090 R	1440 507
WLB-3090 RB	1604 450
WLB-3090 RH	1704 714
WLB-3090 LH	1704 715
WLB-3115 LS	1860 963
WLB-3115 RS	1860 962
WLB-3132 L	1819 166
WLB-3173 L	1753 707
WLB-3173 R	1753 706
WLB-3173 LA	1753 239
WLB-3173 RA	1753 238
WLB-3174 L	1819 166
WLB-3174 R	1819 167
WLB-3178 L	1753 241
WLB-3178 R	1753 240
WLB-3180 L	1753 351
WLB-3180 R	1753 350
WLB-3190 L	1770 025
WLB-3190 R	1770 024
WLB-3191 L	1770 033
WLB-3191 R	1770 032
WLB-3211 L	1810 787
WLB-3211 R	1810 786
XA-548 R	647 165
XA-584	137 407
XA-595 A	120 367
XA-646	110 309
XA-699	1273 370
XA-736	1122 042
XA-744 C	1273 428
XA-744 J	1273 458
XA-744 K	1273 459
XA-744 L	1273 460
XA-744 M	1271 777
XA-744 N	1273 378
XA-744 S	1394 984
XA-748	1271 772
XA-751	1271 765
XA-765	1273 387
XA-766	1273 379
XA-767	1273 434
XA-767 A	1501 831
XA-770	1273 391
XA-773	1527 254
XA-776	1273 435
XA-777	1273 436
XA-782	1273 372
XA-783	1273 373
XA-785	1383 347
XA-794	1405 225
XA-801	1091 629
XA-803	1440 489
XA-803 A	1688 919
XA-815	1594 834
XA-823 A	1616 612
XA-827	903 895
XA-836 A	1753 285
XA-839	1689 763
XA-863	1818 815
XA-903	2095 627
8X-53	132 764
8X-55	121 832
19X-93	180 079
19X-141	120 622
8X-146	120 375
8X-147	120 376
8X-158	120 371
8X-159	120 369

MyMopar.com

VENDOR NUMBER CROSS REFERENCE LIST

AUTO-LITE

VENDOR NUMBER	CHRYSLER NUMBER
X-163 A	113 739
8X-163	120 375
X-176	113 103
12X-193	120 380
X-194	131 044
12X-194	131 044
X-198	120 384
12X-198	120 384
8X-199	120 380
12X-199	120 380
X-204	131 206
X-258	106 749
19X-258	106 749
X-263	103 906
X-295 A	1889 235
8X-323	121 839
8X-361	120 392
19X-361	120 392
X-378	620 528
X-404	121 244
X-441	659 799
X-489	113 702
8X-645	132 696
19X-709	1321 110
8X-712	661 825
8X-714	132 930
6X-832	120 368
8X-832	120 368
X-842	126 049
X-865 A	143 932
8X-878	131 974
19X-884	131 949
8X-902	132 105
19X-902	132 105
X-931	1274 093
8X-1002	120 628
8X-1014	120 214
8X-1063	120 367
10X-1063	120 367
X-1134	131 016
X-1177	138 502
X-1284	138 485
8X-1376	120 368
X-1379	1273 422
X-1491	147 686
19X-1494	132 764
X-1512	1879 391
X-1520	147 685
8X-1576	120 392
X-1590	953 717
X-1610	120 368
X-1649	114 545
X-1711	174 916
8X-1711	174 916
12X-1711	174 916
8X-2843	114 546
X-2845	134 570
X-2955	1394 893
X-3003	1630 649
X-3008	200 156
8X-3017	132 915
X-3031	131 949
X-3032	151 510
X-3037	1273 442
X-3038	1273 456
X-3051	151 507
X-3053	151 517
X-3054	151 518
X-3055	151 519
X-3060	178 469
12X-3074	120 380
X-3075	120 375
X-3090	151 504
X-3135	1479 097
X-3155	1405 223
X-3187	1483 522
X-3217	113 103
X-3226	1552 884
X-3316	1770 296
YRS-6009 AM	1672 803
90-23	1879 604
90-24	1879 594
90-25	1879 595
90-26	1879 596
90-27	1879 597
90-28	1879 605
90-29	1879 606
90-30	1879 607
90-31	1879 613
90-32	1881 721
90-33	1881 722
90-34	1879 598
90-35	1879 599
90-36	1879 601
90-37	1879 602
90-39	1881 747
90-41	1881 752
90-44	1881 766
90-46	1881 768
90-47	1881 929
90-48	1879 603
90-49	1881 727
90-50	1881 728
90-51	1879 611
90-52	1879 612
90-54	1881 726
90-55	1881 724
90-56	1881 751
90-57	1881 737
90-58	1881 756
90-59	1881 748
90-60	1881 746
90-61	1881 754
90-62	1881 755
90-64	1881 753
90-65	1881 719
90-66	1881 720
90-67	1881 741
90-68	1881 740
90-69	1881 745
90-70	1881 744
90-71	1881 743
90-75	2084 083
90-76	2084 081
90-78	2084 294
90-79	2084 302
90-80	2084 303
90-81	2084 432
90-82	2084 433
90-83	2084 434
90-85	2084 435
90-92	2084 638
90-94	2084 666
90-95	2084 667
90-96	2084 655
90-99	2084 680
90-100	2084 857
90-101	2084 853
90-102	2084 854
90-103	2084 867
90-104	2084 868
90-105	2084 869
90-106	2084 870
90-107	2084 877
90-108	2084 878
90-109	2084 879
90-110	2084 880
90-111	2084 881
90-112	2084 850
90-113	2084 888
90-115	2196 330
90-127	2240 294
90-128	2240 295
90-129	2240 296
90-130	2240 297
90-131	2240 530
90-134	2275 225
90-135	2275 226
90-143	2275 225
90-146	2275 564
90-155	2084 869
2012 BS	2084 291
6010 S	1658 865
9738 A	595 361
10870	652 115
13851 A	1566 398
10886 A	1154 292
11397 A	1195 746
11399 A	1195 741
11400 A	1195 745

MyMopar.com

AUTO-LITE

VENDOR NUMBER	CHRYSLER NUMBER
11401 A	1195 742
11434 A	1195 709
11450 A	1195 743
11526 A	1261 467
11538 A	1240 864
11610 A	1257 270
11652 A	1263 499
11680 A	1302 621
11728 A	1302 632
11729 A	1302 630
11783 A	1297 695
11821 A	1257 602
11822 A	1257 604
12103 A	1340 309
12104 A	1340 310
12109 A	1340 314
12110 A	1340 315
12127 A	1340 299
12139 A	1339 824
12306 A	1369 698
12307 A	1369 699
12310 A	1369 697
12348 A	1271 228
12412 A	1272 352
12414 A	1272 351
12415 A	1272 353
12783 A	1473 848
12818 A	1473 882
13091 A	1495 806
13455 A	1571 827
13514 A	1571 704
13535 A	1571 705
13541 A	1571 524
13615 A	1550 103
13630 A	1509 659
13678 A	1660 852
13683 A	1594 753
13709 A	1604 704
13726 A	1604 729
13739 A	1604 228
13740 A	1604 229
13752 A	1622 135
13754 A	1622 622
13778 A	1604 808
13851 A	1566 398
13912 A	1566 399
13964 A	1569 117
13965 A	1569 118
14018 A	1648 566
14019 A	1648 567
14039 A	1658 102
14044 A	1627 484
14071 A	1660 852
14072 A	1660 853
14073 A	1660 854
14195 A	1658 825
14196 A	1648 811
14200 A	1648 819
14201 A	1648 830
14202 A	1648 820
14203 A	1648 822
14204 A	1648 821
14208 A	1663 046
14235-A	1689 411
14259	1753 797
14263 A	1753 599
14265 A	1753 590
14266 A	1753 593
14272 A	1818 830
14280 A	1663 235
14296 A	1753 769
14297 A	1753 766
14298 A	1753 759
14309-A	1819 281
14310 A	1819 282
14321 A	1819 293
14322 A	1819 294
14323 A	1819 295
14324 A	1819 296
14331 A	1779 532
14332 A	1779 557
14336 A	1779 551
14374 A	1838 044
14375 A	1838 043
14376 A	1838 045
14377 A	1838 046
14406 A	1770 093
14433 A	1663 236
14436 A	1779 551
14580 A	1788 621
14581 A	1788 622
14906-A	1798 594
14907 A	1798 595
14908A	1798 596
14915 A	1798 610
14921 A	1923 544
15007 A	1798 750
20702	939 548
23178	1154 399
23935	1262 972
24037	1263 532
24448	1310 382
24511	1300 980
25062	1753 800
25611	1272 373
26082	1473 753
26408	1394 272
27045	1622 819
27123	1622 832
27174	1605 003
27189	1605 004
27235	1626 882
27275	1626 968
27887	1753 739
27934	1769 113
27935	1769 112
28673	1819 429
28703	1819 430
28704	1819 431
28707	1819 438
28849	1819 223
28997	1788 624
29005	1788 627
72200	1658 838
200477	1818 836
200847	2084 847
201006	2095 759
303604	1688 207
303718	1842 000
435361 B	1273 355
4056060	1273 355

MyMopar.com

VENDOR NUMBER CROSS REFERENCE LIST

VENDOR NUMBER	CHRYSLER NUMBER	VENDOR NUMBER	CHRYSLER NUMBER	VENDOR NUMBER	CHRYSLER NUMBER

AUTO-LITE

MyMopar.com

CARTER

VENDOR NUMBER	CHRYSLER NUMBER
A1-126	1827 965
A13-3800 V568	2084 587
AFB-2448 S	1731 514
AFB-2641 S	1822 052
AFB-2642 S	1822 053
AFB-2650 S	1826 079
AFB-2651 S	1826 080
AFB-2652 S	1826 081
AFB-2653 S	1826 082
AFB-2686 S	1821 997
AFB-2686 S	1827 997
AFB-2744 S	1852 574
AFB-2773 S	1855 634
AFB-2786 S	1858 469
AFB-2787 S	1858 470
AFB-2790 S	1858 473
AFB-2791 S	1858 474
AFB-2794 S	1858 476
AFB-2797 S	1858 479
AFB-2798 S	1858 480
AFB-2799 S	1858 481
AFB-2801 S	1858 758
AFB-2805 S	1858 776
AFB-2806 S	1858 777
AFB-2812 S	1858 976
AFB-2813 S	1858 975
AFB-2854 S	1859 935
AFB-2855 S	1945 167
AFB-2856 S	1945 168
AFB-2903 S	1947 809
AFB-2906 S	1947 733
AFB-2925 S	2120 052
AFB-2927 S	2120 054
AFB-2948 S	2120 738
AFB-2950 S	2120 740
AFB-2968 S	2121 208
AFB-2969 S	2121 209
AFB-2991 S	2121 728
AFB-3083 S	2129 881
AFB-3108 S	2202 423
AFB-3131 S	2202 889
AFB-3152 S	2205 730
B-9211 AX	1324 432
BBD-908-S	1533 595
BBD-2162 SA	1611 551
BBD-2178 S	1613 077
BBD-2229-S	1617 862
BBD-2250-S	1671 799
BBD-2262 S	1632 459
BBD-2274-SA	1634 335
BBD-2291-S	E-3 745-M
BBD-2310-S	1637 361
BBD-2313-S	1637 364
BBD-2407-S	1675 941
BBD-2409 S	1631 370
BBD-2420-S	1639 708
BBD-2489 SA	1732 572
BBD-2522 SB	1733 826
BBD-2527 SA	1733 831
BBD-2550 SA	1736 098
BBD-2620 SA	1738 416
BBD-2637 S	1821 960
BBD-2685 S	1827 998
BBD-2733 S	1852 129
BBD-2772 S	1855 633
BBD-2795 S	1858 477
BBD-2822 S	1944 571
BBD-2832 S	1944 683
BBD-2871 S	1859 985
BBD-2896 S	1826 888
BBD-2905 SA	1947 373
BBD-2921 S	2120 048
BBD-2923 S	2120 050
BBD-3132 S	2202 890
BBS-994 S	1631 362
BBS-2215-S	1617 194
BBS-2221-S	E-3 571-M
BBS-2227-S	1617 816
BBS-2248-S	1631 360
BBS-2262 S	1632 459
BBS-2360-S	E-4 057-M
BBS-2403-S	1674 766
BBS-2410-S	1675 971
BBS-2412 SA	1639 710
BBS-2416-S	1676 275
BBS-2421 S	1639 710
BBS-2478 S	1678 676
BBS-2604 S	1739 401
BBS-2624 S	1677 063
BBS-2900 SA	1947 843
BBS-2905 S	1947 373
BBS-2985 SB	2121 505
BBS-3000 S	2121 783
BBS-3001 S	2121 784
BBS-3053 S	2129 177
BBS-3097 S	2202 412
BBS-3098 S	2202 885
BBS-3110 S	2202 568
BBS-3121 S	2202 724
BBS-3127 S	2202 884
BBS-3128 S	2202 885
D6G1	871 552
D6H2	1312 178
D6P2	1317 907
DTE 1	1317 256
DTG-2	1269 404
DTL-2	1400 468
E7B1	1138 880
E-7D3	1138 897
E-7E	1138 898
E7J2	1140 005
E-7L	1140 042
E7R1	1318 987
E-7S	1315 677
E-7T	1317 258
E7U2	1317 259
E9A1	1325 841
E9G1	1532 831
E9T1	1551 025
E9U1	1551 026
E9V1	1551 047
E9X1	1506 462
E9Y1	1507 195
ETW 1	929 845
EQ-200310	1924 069
F-7D	1138 897
F23-39	1450 661
F23-41	1402 616
F23-44 U	1450 885
F23-46 U	1450 660
F23-57 U	1879 294
F23-A20	1320 527
F30-60	1138 687
F30-76	1879 458
F63-129	1316 416
F63-146	1402 617
F 842-S	1402 141
F 862-S	1402 143
IA-17	864 599
IA-24	662 811
IA-30	637 192
IA-45	697 695
IA-64	1140 006
IA-71	1404 605
IA-77	1553 170
IA-88	1553 097
IA-89	1553 098
IA-90	1610 799
IA-94	1618 129
IA-96	1631 364
IA-103	1676 726
M-121-133	1124 946
M-121-134	1400 185
M 203-87S	1676 728
M-639 SB	1450 705
M-834 S	1450 705
M-856 SA	1450 703
M-857 S	1450 706
M-859 SA	1489 858
M-875 SA	1450 704
M-2000 S	1450 720
M-2077 S	1450 719
M-2342 S	1643 175
M-2491 S	1677 406
M-20006	1321 285
RA-2	1501 649
WCD-931-SC	1408 602
WCD-992-SA	1489 993
WCD-2039-SA	1535 929

MyMopar.com

VENDOR NUMBER CROSS REFERENCE LIST

CARTER

VENDOR NUMBER	CHRYSLER NUMBER
WCFB-2041-S	1535 888
WCFB-2210-S	1615 831
WCFB-2253-S	1631 216
WCFB-2302-SB	1636 645
WCFB-2303-SB	1636 649
WCFB-2311-SA	1637 362
WCFB-2314-S	1637 365
WCFB-2317-SA	1635 715
WCFB-2365-S	E-3 889-M
WCFB-2367-SA	1671 906
WCFB-2442-S	1731 473
WCFB-2444-S	1731 475
WCFB-2445-S	1731 476
WCFB-2476-S	1731 639
WCFB-2530 SA	1733 846
WCFB-2531-S	1733 847
WCFB-2532 S	1733 848
WCFB-2534-S	1733 850
WCFB-2535 S	1733 851
WCFB-2588 S	1739 337
WCFB-2589 S	1739 338
WCFB-2590 S	1739 339
WCFB-2628 S	E-4534-M
WCFB-2631 S	1821 709
WCFB-2632 SA	1821 710
WCFB-2635 S	1821 885
WCFB-2636 S	1821 886
WCFB-2660 S	1827 687
WCFB-2698 S	1851 490
WCFB-2741 S	1852 257
WCFB-2742 S	1852 258
WCFB-2761 S	1855 390
WCFB-2762 S	1855 391
WCFD-2622 SA	1821 318
YH-2911 S	E-5815-M
1-432-S	1073 080
1A-17	864 599
1A-23	561 378
1A-24	662 811
1A-30	637 192
1A-45	697 695
1A-46	637 191
1A-64	1140 006
1A-71	1404 605
1A-77	1553 170
1A-88	1553 097
1A-89	1553 098
1A-90	1610 799
1A-94	1618 129
1A-99	1615 551
1A-103	1676 726
2-118	1073 092
3-182	1945 482
3-449 S	957 797
3-971 S	1618 270
4-475-S	1073 083
4A-105-S	1190 551
4A-114 S	1190 551
6E-2	912 412
6N 1	1317 959
6-773 S	1409 449
7-138-S	1075 634
10-58	1826 863
11B-79	699 811
11B-186-S	1070 743
11B-193	1073 093
11B-219-S	1125 788
15-58 S	1826 863
15-62 S	1826 346
16-25	2084 108
16-26	1826 845
16-27	2084 111
16-29	1826 887
16-35	1826 347
16-39	1826 348
16-40	1826 349
16-42	1826 884
16-43	1826 875
16-45	1826 840
16-51	1826 861
16-109	2084 112
16-111	2084 110
16-113	2084 109
16-117	2084 165
16-118	2084 179
16-119	2084 184
16-120	2084 194
16-122	2084 202
16-157	2240 479
16-158	2240 488
16-160	2240 466
16-161	2240 463
16-162	2275 252
16-165	2240 473
25-44-S	645 615
25-82-S	690 676
25-98-S	1400 821
25-148-S	1072 972
25-202-S	1404 577
25-216-S	1531 362
25-225-S	1539 152
25-254-S	1610 738
25-273 S	2084 132
25-278-S	1618 234
25-279-S	1618 235
25-280-S	1618 288
25-291-S	1631 436
25-392 S	2196 207
25-337 S	1826 833
25-343 S	1826 834
25-348 S	1826 844
25-362 S	2084 180
25-394 S	2240 410
25-426 S	2240 401
25-428 S	2240 438
25-437 S	2240 493
25-440 S	2275 281
30-37	1138 687
30-58	1826 353
30-73	1618 236
61-288	1075 669
61-314-S	1323 827
61-502	1631 372
62-208-S	1631 437
64-60-S	697 709
64-74 S	871 999
64-118-S	1140 849
64-134-S	1404 612
64-137-S	1404 604
64-145 S	1610 746
64-148 S	1533 778
64-160-S	1610 784
64-161-S	1610 774
64-163-S	1618 107
64-174-S	1618 150
64-176-S	1618 250
64-182-S	1631 398
64-183-S	1631 409
64-184 S	1631 453
64-187-S	1631 515
64-210 S	1826 607
64-212 S	1826 369
64-215 S	1826 846
64-237 S	2240 402
65-34-S	1533 785
71A-17	622 462
75-118 S	1631 471
75-126	2240 492
75-933	1551 493
75-934	1551 494
75-943	1553 141
75-990	1553 168
75-991	1610 806
75-998	1610 794
75-999	1618 108
75-1125	1610 869
75-1143	1618 251
75-1144	1618 297
75-1145	1631 327
75-1160	1631 394
75-1168	1631 389
75-1177	1631 438
75-1178	1631 440
75-1180	1631 442
75-1186	1631 471
75-1207	1631 504
75-1208	1631 502
75-1217	1631 613
75-1225	1631 680
75-1247	1631 704
75-1248	1631 705

MyMopar.com

CARTER

VENDOR NUMBER	CHRYSLER NUMBER
75-1251	1631 783
75-1263	1676 675
75-1264	1676 690
75-1273	1676 695
75-1274	1676 696
75-1278	1676 693
75-1280	1676 701
75-1281	1676 702
75-1327	1676 755
75-1328	1676 769
75-1336	1676 813
75-1344	1676 814
75-1365	1826 185
75-1370	1826 189
75-1373	1826 192
75-1376	1826 221
75-1387	1826 280
75-1391	1826 413
75-1409	1826 881
75-1414	1826 879
75-1426	1826 848
75-1427	1826 883
75-1429	1826 843
75-1442	1826 886
75-1453	2084 131
75-1476	2084 183
75-1477	2084 182
75-1482	2084 182
75-1494	2196 223
75-1507	2196 215
75-1518	2240 403
75-1519	2240 439
75-1525	2240 476
75-1526	2240 492
75-1575	2275 285
76-34	1066 646
76-35	1066 647
80-46-S	1075 655
86-11	120 380
86-15	120 382
86-26	121 752
101-12	131 974
101-173	100 944
101-178	963 799
101-179	1075 631
101-181	963 798
101-195	1073 097
101-200 S	1073 098
101-203	1075 670
101-234 S	188 079
101-248	1193 218
101-322	271 122
105-A-13	120 369
105A-51	271 506
114-137-S	1631 516
115-239	1618 258
118-53-S	1075 660
120-155	1826 235
120-159	1400 857
120-160	1631 540
120-163	1826 208
120-164	1676 758
120-166	1610 758
120-173 S	1531 177
120-174	1631 629
120-175	1676 717
120-182 S	1531 178
120-183 S	1531 179
120-185	1676 692
120-186	1631 541
120-189	1826 865
120-195 S	1553 088
120-196	1610 759
120-199-S	1610 880
120-200-S	1610 811
120-201 S	1610 812
120-206-S	1610 882
120-207 S	1610 881
120-210 S	1618 217
120-211-S	1618 218
120-212-S	1618 219
120-213-S	1618 220
120-214-S	1618 221
120-215-S	1618 222
120-217 S	1631 354
120-221 S	1631 617
120-224	1676 691
120-226	1676 770
120-228	2084 166
120-231 S	1826 849
120-232 S	1826 837
120-245 S	2196 203
120-248 S	2240 448
120-249	2240 437
120-251 S	2240 485
120-252	2240 464
120-253 S	2240 404
121-78	1330 873
121-113	1073 085
121-115	929 850
121-175	1330 874
121-176	1330 875
121-202	1409 446
121-229	1618 262
136-27	1141 431
137 A	1063 442
149-82-S	1073 090
156-29	862 072
156-92	188 947
156-116 S	1826 876
159-59-S	650 193
159-93-S	867 322
163-22	1073 099
163-28	1117 474
164 A	1826 425
170-AA-312 SU	1610 845
170-AB-317 SU	1610 864
170-AB-323 SU	1610 863
170-AB-426 S	1676 679
170-AC-323 S	1631 330
170-AC-325 SU	1676 733
170-AC-358 S	1631 396
170-AC-385 S	1631 493
170-AE-320 SU	1610 865
170-AE-479 S	1826 880
170-AH-312 SU	1610 866
170-AN-320 S	1631 626
170-AN-479 S	1676 751
170-AR-358 S	1618 307
170-AR-538 S	1826 398
170-AS-484 S	1676 837
170-AU-465 S	1737 782
170-AU-653 S	2121 955
170-AU-654 S	2121 956
170-AV-464 S	1737 780
170-AW-484 S	1676 837
170-AX-514 S	1821 963
170-AX-596 S	1858 523
170-AZ-538 S	1826 847
170-BA-655 S	2121 957
170-BC-634 S	1947 765
170-EC-634 F	1947 765
170-N-312 S	1618 116
170-P-312 S	1618 111
170-T-320 S	1676 720
170-X-312 S	1676 775
172 A	1826 503
192-23 S	1479 527
195-65-U	1631 640
195-66-U	1674 812
202-24 S	1404 610
202-35-S	1538 426
202-75-S	1557 277
202-76-S	1557 281
202-80-U	1631 362
202-83-U	1631 370
203	1826 428
203-53 S	2084 130
205	1826 429
212 D	1826 505
213 A	1826 430
213-14-S	1400 883
214 A	1826 506
215	1826 431
218	1501 649
218-10	1075 671
224-10-S	1313 707
224-11-S	1316 029
224-13-S	1316 031

MyMopar.com

VENDOR NUMBER CROSS REFERENCE LIST

CARTER

VENDOR NUMBER	CHRYSLER NUMBER
224-15-S	1316 033
225	1826 432
234 A	1826 433
236	1826 434
237	1826 435
242	1826 436
243	1826 437
244	1826 438
247 A	1826 439
251	1826 440
252	1826 441
255	1826 442
264 A	1826 443
265	1826 444
269 A	1826 445
278	1826 446
282 A	1826 504
288	1826 507
297	1826 508
298	1826 509
299	1826 510
300	1826 511
302	1826 512
309	1826 513
310	1826 514
311	1826 515
313	1826 560
316	1826 554
317	1826 552
318	1826 549
319	1826 561
320	1826 562
326	1826 616
333	2084 129
335	2084 192
336	2084 193
337	2084 200
340	2196 221
341	2196 222
343	2196 211
344	2196 212
900-1	2084 682
900-2	2084 683
900-4	2084 684
900-5	2084 685
900-10	2084 686
900-14	2084 687
900-15	2084 688
900-16	2084 689
900-22	2084 690
900-25	2084 691
900-26	2084 692
900-29	2084 693
900-35	2084 694
900-40	2084 695
900-47	2084 696
900-48	2084 687
900-49	2084 688
900-52	2084 699
900-53	2084 700
900-55	2084 701
900-67	2084 702
900-68	2084 703
900-69	2084 704
900-70	2084 705
900-71	2084 706
900-81	2084 707
900-89	2084 708
900-100	2196 226
900-102	2196 228
900-103	2196 229
900-104	2196 230
900-105	2196 231
900-106	2196 232
900-107	2196 233
901-1	2196 227
901-2	2196 230
905-1	2084 176
905-2	2084 177
905-3	2084 178
905-4	2084 187
905-5	2084 189
905-6	2084 190
905-7	2084 198
905-8	2084 199
905-9	2084 196
1341 B	1501 648
1503 N	1826 598
1513 N	1826 447
1526 N	1826 448
1533 N	1826 596
1534 P	1826 517
1578 N	1826 449
1579 N	1826 450
1728 N	1826 451
1740 N	1826 452
1748 N	1826 453
1752 N	1826 454
1753 N	1826 455
1757 N	1826 456
1758 N	1826 457
1766 N	1826 458
1768 N	1826 459
1775 N	1826 460
1779 N	1826 461
1786 N	1826 462
1789 N	1826 464
1791 N	1826 465
1793 N	1826 466
1794 N	1826 467
1795 N	1826 468
1801 N	1826 469
1806 N	1826 470
1817 N	1826 471
1820 N	1826 472
1825 N	1826 473
1826 N	1826 474
1834 N	1826 475
1835 N	1826 476
1838 N	1826 477
1846 N	1826 478
1857 N	1826 479
1858 N	1826 480
1859 N	1826 481
1860 N	1826 482
1862 N	1826 483
1863 N	1826 484
1864 N	1826 485
1869 N	1826 486
1876 N	1826 546
1878 N	1826 489
1879 N	1826 490
1880 N	1826 491
1881 N	1826 492
1882 N	1826 493
1883 N	1826 494
1884 N	1826 495
1885 N	1826 496
1886 N	1826 497
1887 N	1826 498
1888 N	1826 499
1889 N	1826 500
1890 N	1826 501
1891 N	1826 502
1892 N	1826 519
1893 N	1826 520
1894 N	1826 521
1895 N	1826 522
1896 N	1826 518
1897 N	1826 523
1898 N	1826 535
1899 N	1826 536
1900 N	1826 525
1901 N	1826 524
1903 N	1826 547
1905 N	1826 530
1906 N	1826 526
1907 N	1826 548
1908 N	1826 531
1909 N	1826 532
1910 N	1826 533
1912 N	1826 528
1913 N	1826 555
1914 N	1826 527
1915 N	1826 553
1916 N	1826 551
1917 N	1826 542
1918 N	1826 543
1919 N	1826 544
1925 N	1826 550
1926 N	1826 563

MyMopar.com

CARTER

VENDOR NUMBER	CHRYSLER NUMBER
1927 N	1826 564
1928 N	1826 565
1942 N	1826 591
1943 N	1826 592
1948 N	1826 611
1949 N	1826 612
1951 N	1826 613
1955 N	1826 620
1959 N	1826 859
1960	1826 858
1961 N	1826 857
1962 N	1826 856
1973 N	1826 877
1976 N	1826 760
1978 N	1826 761
1983 N	2084 128
1988 N	2084 164
1989 N	2084 176
1993 N	2084 188
1996 N	2084 191
5010 N	2196 216
5011 N	2196 217
5012 N	2196 218
5013 N	2196 219
5015 N	2196 213
5016 N	2196 220
5027 N	2084 197
5500	1075 648

MyMopar.com

VENDOR NUMBER CROSS REFERENCE LIST

VENDOR NUMBER	CHRYSLER NUMBER	VENDOR NUMBER	CHRYSLER NUMBER	VENDOR NUMBER	CHRYSLER NUMBER

NOTES

MyMopar.com

STROMBERG

VENDOR NUMBER	CHRYSLER NUMBER
3-85	1241 507
3-99	1317 260
3-100	1317 261
1928 N	1826 565
374146	1935 343
379868	1935 344
380249	1312 120
380261	1317 260
380262	1317 261
380319	1409 941
380320	1404 045
380322	1484 347
380326	1485 966
380327	1485 967
380330	1489 789
380331	1489 786
380360	1612 232
380363	1613 072
380365	1613 074
380376	1616 350
380388	1632 458
380391	1636 646
380393	1636 648
380396	1637 354
380404	1639 936
380408	1676 334
380423	1639 706
380424	1674 823
380428	1730 456
380431	1673 744
380440	1736 093
380442	1736 095
380443	1736 096
380444	1736 097
380451	1738 618
380452	1738 619
380458	1738 406
380476	1828 000
380943	1947 841
380948	1859 944
380953	1945 422
380970	2120 064
380971	2120 065
380989	2121 780
382340	2084 728
382357	1631 366
382359	1631 368
382363-4	1610 817
382371	1610 818
382454	869 577
382548	869 688
382897	957 323
384368	1610 838
384657	1138 695
384956	1138 697
385100	1312 284
385120	1316 746
385449	1323 833
385499	1535 993
386108	1531 383
386117	1531 384
386186	1534 460
386205	1533 766
386207	1533 768
386208	1533 769
386208	1534 463
386208	1618 205
386208	1676 659
386227	1479 527
386290	1539 149
386498	1553 093
386724	1618 178
386776	1618 184
386797	1618 185
386904	1618 216
386906	1618 201
386943	1631 339
386949	1631 353
386951	1631 377
386988	1631 486
387144	1631 656
387184	1631 709
387189	1631 673
387410	1738 613
387411	1738 614
387444	1676 821
387745	1826 862
387749	1826 414
387806	1852 020
388111	2084 729
388211	1826 885
388471	2084 733
388481	2084 730
388558	2196 204
388592	2240 436
388657	2240 454
388661	2240 456
901002	131 044
901006	120 380
902024-K1	132 688
902963-K1	132 056
903899-K1	131 954
903922-K1	132 056
904230-K1	132 105
AAVP-2	1530 598
BVX-3-110	1489 789
J-5968	1610 819
P-112-S-22	112 726
P-2290	120 614
P-2866	131 958
P-3157	120 380
P-18811	1123 980
P-18839	137 406
P-21197	662 762
P-21198	1531 371
P-21918	959 232
P-22499	677 620
P-23361	1631 694
P-23567	1486 385
P-23606	1631 496
P-23676	691 200
P-23912	1610 836
P-24827	861 129
RK-143	1610 815
RK-148	1618 123
RK-149	1610 816
RK-172	1610 814
RK-185	1618 124
RK-188	1631 365
RK-194	1631 451
RK-195	1631 495
RK-197	1631 682
RK-220	1676 721
RK-222	1676 722
RK-223	1676 720
RK-229	1676 812
RK-231	1826 152
RK-232	1826 154
RK-233	1826 155
RK-235	1826 271
RK-236	1826 272
RK-240	1826 331
RK-241	1826 423
RK-242	1826 539
RK-243	1826 540
RK-244	1826 511
RK-245	1826 557
RK-251	1826 850
RK-253	1826 866
RK-258	2084 113
RK-259	2084 114
RK-260	2084 115
RK-267	2084 722
RK-268	2084 723
RK-269	2084 724
RK-270	2084 725
RK-271	2084 726
RK-272	2084 727
RK-273	2196 202
RK-276	2240 455
RK-277	2240 457
WW-15-28	1826 101
WW3-105A	1409 941
WW3-106A	1404 045
WW3-108 A	1485 966
WW3-110	1489 789
WW3-130	1617 861
WW3-142	1676 332
WW3-144	1676 334
WW3-145	1639 706
WW3-146A	1674 823

MyMopar.com

VENDOR NUMBER CROSS REFERENCE LIST

STROMBERG

VENDOR NUMBER	CHRYSLER NUMBER
WW3-147	1730 456
WW3-152	1828 000
WW3-161	1738 406
WW3-171	*1851 554
WW3-173	*1851 556
WW3-184	1945 422

MyMopar.com

TIMKEN

VENDOR NUMBER	CHRYSLER NUMBER
5-BC	669 077
6	618 311
6-AX	1316 791
6-CE	632 685
7-C	1536 251
11-BA	376 749
11-BC	640 086
12-CB	1532 736
13-C	376 751
14-C	637 539
14-CE	1532 737
15-BA	386 645
16	386 642
18	924 262
35-BC	640 892
36-X	675 117
38-A	1273 099
T-83	959 141
T-138	531 031
332	304 003
339	568 675
342-S	314 951
382	527 722
387-A	527 521
394-A	527 745
394-AS	1667 854
395	536 645
395-A	1508 700
432	531 053
444	579 104
453-X	1662 719
462	1662 721
472-A	510 764
472-A	1264 092
482	1264 090
485-T	1264 869
493	1264 086
495	107 363
495	1663 767
495-A	1264 084
495-AX	1663 767
496	1191 987
498	1264 091
532-A	531 050
539	531 049
552-A	1192 238
559	1192 237
560	572 032
563	503 248
566	519 107
572	530 133
575	530 371
580	572 037
581	553 219
582	1192 001
592-A	1192 542
598-A	1192 543
1220	622 266
1280	622 267
1729	698 401
1755	698 402
1780	1262 533
1780	1662 675
2523	698 390
2578	1662 741
2585	698 391
2631	55 584
2691	1193 749
2720	310 213
2735-X	1188 715
2736	681 318
2780	1188 716
2788	22 678
2790	41 591
2793	927 375
2820	854 617
2877	854 618
2924	927 016
2984	927 018
3420	51 094
3476	376 505
3479	1667 638
3525	305 654
3525	1662 740
3585	668 122
3586	1662 742
3720	503 229
3778	570 918
3780	913 778
3820	619 395
3876	567 226
3878	856 859
3880	668 520
3920	1662 783
3975	1270 856
3979	1192 110
3982	1662 785
3984	1662 722
3994	1789 829
A-4059	625 119
A-4138	625 118
5535	1793 637
5566	1192 735
5577	1508 901
5720	1503 911
5784-T	1503 910
9121	1267 718
9181	1267 721
9185	1267 719
02820	1793 512
02872	1793 513
09062	1274 672
09067	1139 292
09074	698 389
09194	698 388
09195	1139 291
11520	1793 515
11590	1793 514
LM-11910	1619 702
LM-11949	1619 703
12520	1662 607
12580	1662 723
12610	1790 244
12649	1790 241
14116	1790 525
14119-A	1189 687
14124	912 161
14125-A	698 395
14130	698 410
14137-A	589 211
14138-A	698 396
14274	698 409
14276	698 394
15101	1790 546
15123	1139 294
15245	1139 293
18620	1792 268
18685	1792 267
23100	927 014
23256	927 013
24720	926 162
24780	912 160
25520	698 403
25523	1793 510
25576	929 194
25577	1793 511
25580	698 404
25590	1790 523
25821	698 399
25877	698 400
26822	671 604
26823	1662 673
26884	1662 674
28521	1795 352
28580	1795 353
28622	927 015
28682	927 017
28920	587 531
28985	587 530
31520	698 413
31590	698 414
31593	698 415
31594	1793 516
31597	1795 927
33275	1660 794
33281	1662 786
33462	1662 784
33472	1660 792
33821	926 245
33891	926 244
34301	1666 152

MyMopar.com

VENDOR NUMBER CROSS REFERENCE LIST

VENDOR NUMBER	CHRYSLER NUMBER	VENDOR NUMBER	CHRYSLER NUMBER	VENDOR NUMBER	CHRYSLER NUMBER

ZENITH

MyMopar.com

MyMopar.com