# Plymouth

## SERVICE MANUAL 1966

### FOREWORD

This Plymouth Service Manual has been prepared with the latest service information available for use on 1966 models. Diagnosis, disassembly, repair, assembly and installation procedures coupled with complete specifications and tightening references can be found in each group. This publication is one of the most important "tools" available to the service technician. It will prove an invaluable aid in properly performing any phase of service necessary to maintain or restore the fine performance and reliability characteristics designed, engineered, and manufactured into these outstanding automobiles.

### PLYMOUTH MODELS

| | | 1966 |
|---|---|---|
| Valiant V-100, V-200, Signet and Barracuda | 6 Cyl. | BV-1 |
| Valiant V-100, V-200, Signet and Barracuda | 8 Cyl. | BV-2 |
| Belvedere I, II | 6 Cyl. | BR-1 |
| Belvedere I, II and Satellite | 8 Cyl. | BR-2 |
| Fury I, II, III | 6 Cyl. | BP-1 |
| Fury I, II, III and Sport Fury | 8 Cyl. | BP-2 |

| | | 1965 |
|---|---|---|
| Valiant V-100, V-200, Signet and Barracuda | 6 Cyl. | AV-1 |
| Valiant V-100, V-200, Signet and Barracuda | 8 Cyl. | AV-2 |
| Belvedere I, II | 6 Cyl. | AR-1 |
| Belvedere I, II and Satellite | 8 Cyl. | AR-2 |
| Fury I, II, III | 6 Cyl. | AP-1 |
| Fury I, II, III and Sport Fury | 8 Cyl. | AP-2 |

The service tools referred to in this Manual are available through Kelsey-Hayes Company, Miller Special Tools, 17640 Grand River, Detroit, Michigan 48227, U.S.A. unless otherwise specified.

Extra copies of this Manual are available at $5.00 each under Part Number 81-570-6450. Order from Chrysler-Plymouth Division, Service Department, P.O. Box 1658, Detroit, Michigan 48231.

214-572-7240
IN Disco 1-800-544-3512
SAXON Auto 1-800-458-2734

CHRYSLER - PLYMOUTH DIVISION

CHRYSLER MOTORS CORPORATION

Chrysler Corporation reserves the right to make changes in design or to make additions to or improvements in its product without imposing any obligations upon itself to install them on its products previously manufactured.

Litho in U. S. A.

35M SD & T 8-65

## GROUP INDEX


| | |
|---|---|
| | Introduction and General Specifications |
| 0 | Lubrication and Maintenance |
| 1 | Accessories—(Radios, Heaters, Mirrors) |
| 2 | Front Suspension |
| 3 | Rear Axle |
| 5 | Brakes—Service Parking |
| 6 | Clutch |
| 7 | Cooling System—Accessory Belt Drives |
| 8 | Electrical and Instruments |
| 9 | Engine—Engine Oiling |
| 11 | Exhaust System |
| 14 | Fuel System |
| 16 | Propeller Shaft and Universal Joints |
| 17 | Springs and Shock Absorbers |
| 19 | Steering Gear—Manual Power |
| 21 | Transmission—Standard Automatic |
| 22 | Wheels, Bearings and Tires |
| 23 | Body, Sheet Metal and Frame |
| 24 | Air-Conditioning |


[redacted]

81-570-6450

MyMopar.com

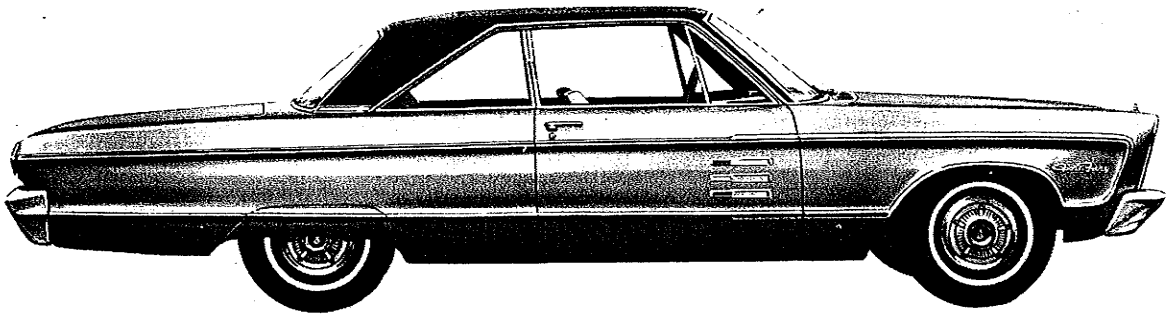

SPORT FURY 2-DOOR HARDTOP

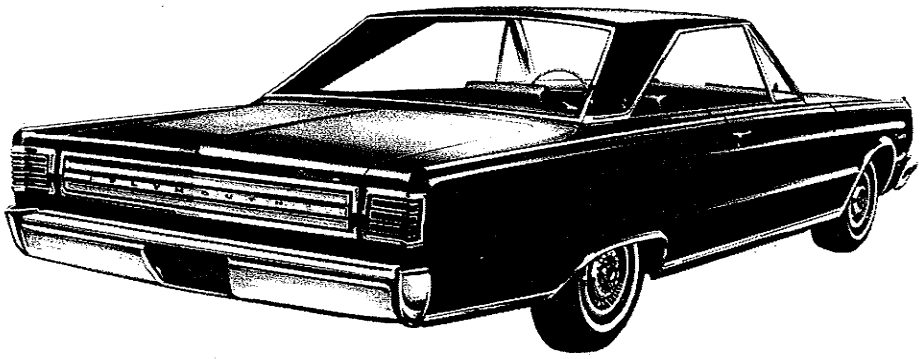

SATELLITE 2-DOOR HARDTOP

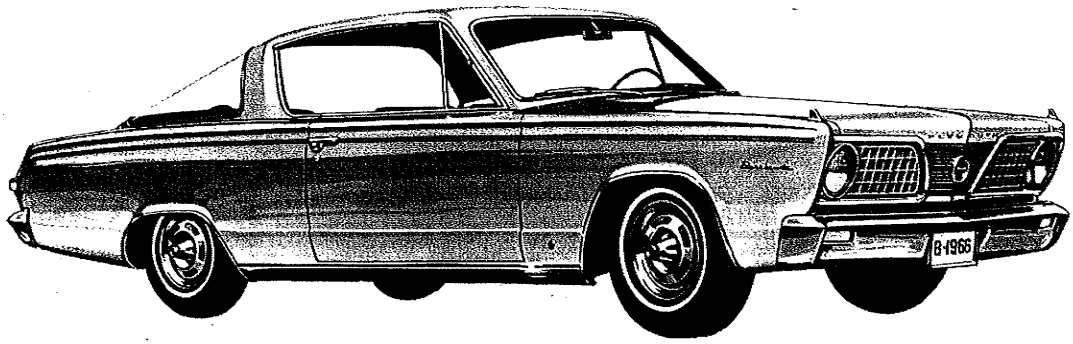

BARRACUDA

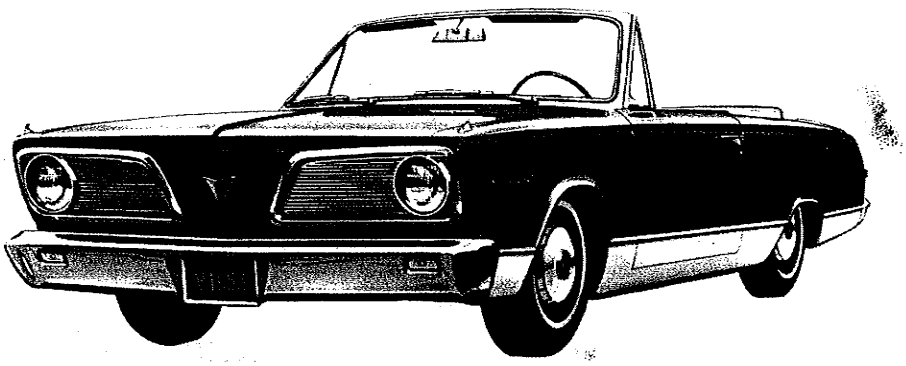

SIGNET CONVERTIBLE

NN807

***Fig. 1—1966 Plymouth Models***

MyMopar.com

## DEALER—FACTORY CONTACT

The following outline of the proper procedure to use in obtaining assistance or advice on any matter applying to Service will insure your inquiries receiving prompt attention and handling. Make certain those members of your organization who might have the occasion to contact either your Regional Office or the factory, are thoroughly familiar with this procedure.

All matters pertaining in any way to Warranty Service Claims, or of a technical nature, should be handled by you direct with your Regional Service Office. When in doubt as to the proper procedure to follow in the handling of a claim or complaint, prompt results can be obtained through a letter, telegram or phone call to your Regional Service Office—making certain to include all necessary information. If the aid of a Service Representative is necessary, the Regional Office will arrange for his contact as promptly as circumstances permit.

Letters or telegrams to the Regional Service Office, should be confined to one subject only and should include the following information:

Car Serial Number
Date of Sale
Owner's Name
Mileage

Complete description of difficulty, corrective action taken, your recommendations as to what should be done and the reason for so doing.

Include Paint and Trim Code Numbers where finish, upholstery, body or sheet metal is involved, and estimate of net cost of repairs.

## CHRYSLER-PLYMOUTH DIVISION

With the exception of orders for parts or parts literature, all requests for Imperial, Chrysler, Plymouth Service literature such as Service Bulletins, Service Manuals, Owner Manuals, Time Schedules, W.S.C.'s or other Chrysler—Plymouth Division Service literature, should be addressed to:

(Letters)
Chrysler Corporation
Chrysler—Plymouth Division
Service Department
P. O. Box 1658
Detroit, Michigan 48231

(Telegrams)
Chrysler—Plymouth Division
Attention
(Name of person to whom sent)
WUX
Detroit, Michigan

Phone 822-4700 (Area Code 313)

**NOTE: Please make certain to include the Code WUX on all telegrams to the Chrysler-Plymouth Division as this insures delivery direct to our Teleprint Room thus eliminating delay.**

## PARTS DIVISION

When parts and accessories are not immediately available from your local source of supply and to insure for fastest delivery, please follow the **"IMPORTANT ORDERING INFORMATION"** as outlined in the **"MASTER PARTS PRICE LIST"** published by the Parts Division of Chrysler Motors Corporation.

## MASTER TECHNICIANS SERVICE CONFERENCE

All correspondence concerning enrollment in the M.T.S.C. Program, issuance of awards, orders for additional material, the return of reports, or any other matters relating to this program, should be addressed to:

Master Technician Service Conference
Chrysler Corporation Training Center
P.O. Box 2119
Detroit, Michigan 48231
Phone 539-3000—Area Code 313

MyMopar.com

## VEHICLE AND ENGINE NUMBERS

VEHICLE NUMBER: The vehicle number (serial number) is located on a plate attached to the left front door hinge pillar post (Fig. 2).

All vehicle numbers contain thirteen digits. The vehicle number is a code which tells the carline (1st digit), price class (2nd digit), body type (3rd and 4th digit), engine displacement (5th digit), model year (6th digit), assembly plant (7th digit), and vehicle sequence number (last six digits) starting with 100001.

ENGINE NUMBERS: The engine numbers contain the model, cubic inch displacement and the manufacturing date (Figs. 3, 4 and 5). The numbers are stamped on a boss on the cylinder block as shown.

## BODY PLATE NUMBER LOCATION

The body number is stamped on a plate which is attached on the engine side on the fender shield near the battery. The plate shows the body type, schedule date, trim code and the paint code (Fig. 6).

| 1st Digit Carline | 2nd Digit Price Class | 3rd & 4th Digits Body Type | 5th Digit Eng. Displacement Cu. In. | 6th Digit Model Year | 7th Digit Assembly Plant |
|---|---|---|---|---|---|
| B-Barracuda | E-Economy | 21-2 Dr. Sedan | A-170 | 6-1966 | 1-Lynch Road |
| V-Valiant | L-Low | 23-2 Dr. Hardtop | B-225 | | 2-Hamtramck |
| | M-Medium | 27-Convertible | C-273 | | |
| R-Plymouth 116" | H-High | 29-2 Dr. Sports Hardtop | D-318 | | 4-Belvidere |
| | P-Premium | 41-4 Dr. Sedan | E-361 | | 5-Los Angeles |
| P-Plymouth 119" | K-Police | 43-4 Dr. Hardtop | F-383 | | 6-Newark |
| | T-Taxi | 45-2 Seat Station Wagon | | | 7-St. Louis |
| | | 46-3 Seat Station Wagon | H-426 | | 8-Export |

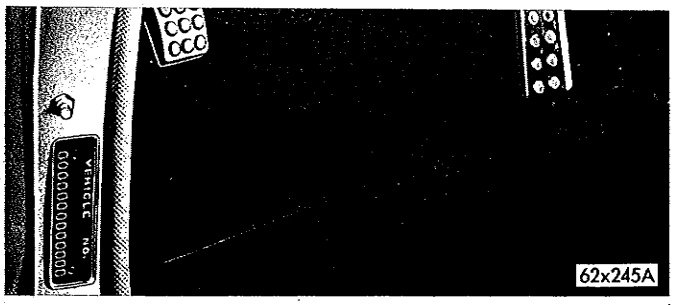


*Fig. 2—Vehicle Number Plate*

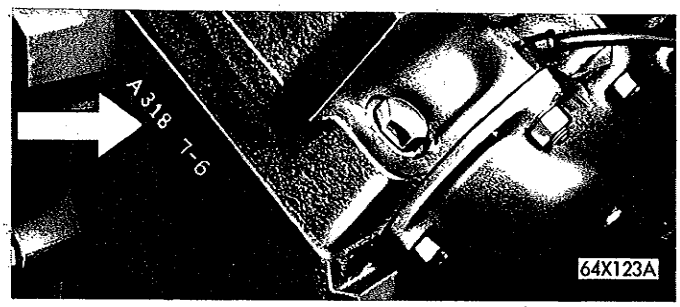


*Fig. 4—Engine Number Location (318 Cu. In. Eng.)*

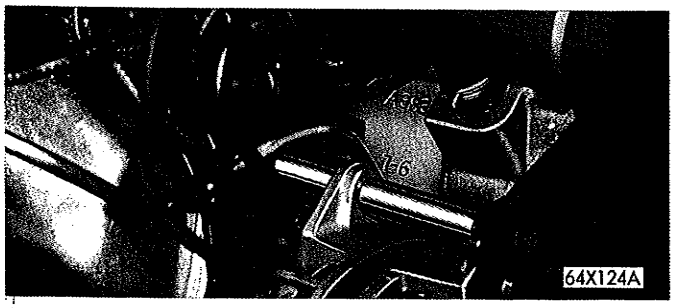


*Fig. 5—Engine Number Location (361 and 383)*

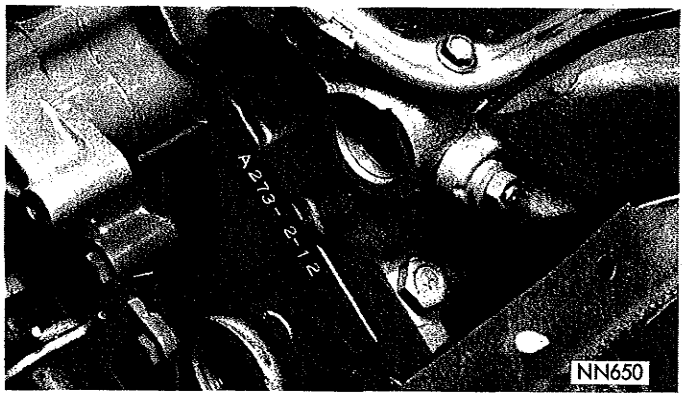


*Fig. 3—Engine Number Location (273 Cu. In. Eng.)*

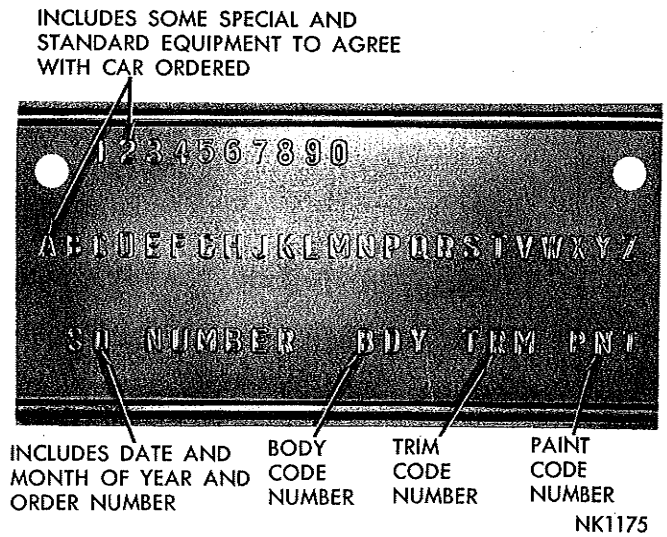


*Fig. 6—Body Number Plate*

MyMopar.com

| BODY STYLE | VALIANT | BELVEDERE | FURY |
|---|---|---|---|
| Two Door Sedan | V-100, V-200 | Belvedere I | Fury I, II |
| Two Door Hardtop | Signet | Belvedere II, Satellite | Fury III, Sport Fury |
| Convertible | V-200, Signet | Belvedere II, Satellite | Fury III, Sport Fury |
| Two Door Sports Hardtop | Barracuda | | |
| Four Door Sedan | V-100, V-200 | Belvedere I, II | Fury I, II, III |
| Four Door Hardtop | | | Fury III |
| Station Wagon | V-100, V-200 | Belvedere I, II | Fury I, II, III |
| Wheelbase (Except Station Wagon) | 106.0" | 116.0" | 119.5" |
| Station Wagon | 106.0" | 116.0" | 121.5" |
| Tread (Front) | 55.9" | 59.5" | 62.0" |
| Tread (Rear) | 55.6" | 58.5" | 60.7" |
| Length with Bumper | | | |
| Except Station Wagon) | 188.2" | 203.4" | 209.4" |
| Station Wagon | 188.8" | 208.5" | 216.1" |
| Width with Bumper | | | |
| (Except Station Wagon) | 70.1" | 75.6" | 78.0" |
| Station Wagon | | 75.1" | 78.1" |
| Rear Axle Ratio with | | | |
| Manual Trans. | | | |
| 6 Cyl. | 3.23" | 3.31" | 3.55" |
| 8 Cyl. | 2.93" | 3.23" | 3.23" |
| Rear Axle Ratio with | | | |
| 4-Speed Manual and 4 bbl | | | |
| 273 Cu. In. Engine | 3.23" | | |
| Rear Axle Ratio with | | | |
| TorqueFlite | | | |
| 6 Cyl. | 3.23"* | 2.93" | 3.23" |
| 8 Cyl. | 2.93" | 2.93"** | 2.93" |

*With 225 Cubic Inch Engine. 2.93 ratio.
**With 361, 383, and 4 bbl 426 Cubic Inch Engine 3.23 ratio.

MyMopar.com

MyMopar.com

# LUBRICATION AND MAINTENANCE

## CONTENTS


| | Page |
|---|---|
| ALTERNATOR | 11 |
| BATTERY | 11 |
| BODY MAINTENANCE | 23 |
| BRAKES | 9 |
| CARBURETOR AIR CLEANER | 17 |
| CARBURETOR CHOKE SHAFT | 18 |
| CERTIFIED CAR CARE | 1 |
| CHASSIS LUBRICATION | 6 |
| CLASSIFICATION OF LUBRICANTS | 1 |
| CLUTCH LINKAGE (Manual Transmission) | 10 |
| COOLING SYSTEM | 10 |
| CRANKCASE VENTILATION SYSTEM | 13 |
| DISTRIBUTORS | 11 |
| ENGINE OIL FILTER | 12 |
| ENGINE OIL—SELECTION OF | 11 |
| ENGINE PERFORMANCE EVALUATION | 16 |
| FREQUENCY OF OIL CHANGES | 12 |
| FRONT WHEEL BEARINGS | 21 |
| FUEL FILTER | 18 |
| HEADLAMPS | 11 |
| HOISTING | 6 |
| HOOD LOCK | 23 |
| HYDRAULIC BRAKE SYSTEM | 9 |
| LUBRICATION AND MAINTENANCE SERVICES | 4 |
| MANIFOLD HEAT CONTROL VALVE | 17 |
| MATERIALS ADDED TO ENGINE OILS | 12 |
| PARKING BRAKE MECHANISM | 10 |
| PARTS REQUIRING NO LUBRICATION | 31 |
| PROPELLER SHAFT AND UNIVERSAL JOINTS | 19 |
| REAR AXLE | 8 |
| SPEEDOMETER CABLE | 22 |
| STEERING GEAR | 19 |
| SUMMARY OF LUBRICATION AND MAINTENANCE SERVICES | 1 |
| TIRES | 22 |
| TRANSMISSION (Automatic) | 21 |
| TRANSMISSION (Manual) | 20 |
| WINDSHIELD WIPER BLADES | 11 |


## CERTIFIED CAR CARE

Certified Car Care is a thorough servicing program that helps make sure the cars you sell receive the regular attention you know they need.

Certified Car Care helps build business for you in the best way known—through customer satisfaction. Inform your customers that the best approach to trouble-free driving is Certified Car Care.

This is a practical plan to help you build up sales and service volume, by providing regular service customer visits.

## SUMMARY OF LUBRICATION AND MAINTENANCE SERVICES

Maintenance and lubrication service recommendations for the 1966 Chrysler Corporation-built Plymouth vehicles have been compiled to provide maximum protection for the car owner's investment against all reasonable types of driving conditions.

Since these conditions vary with the individual car owner's driving habits, the area in which the car is operated and the type of service to which the car is subjected, it is necessary to prescribe lubrication and maintenance service on a time frequency as well as mileage interval basis.

Vehicles operated under conditions not classified as normal service for passenger cars, such as in trailer towing service; operation at higher than normal loading or police or taxicab operation, require servicing at more frequent intervals. This information is included in each group under appropriate headings.

Information pertaining to Lubrication and Maintenance requirements is shown on charts (Figs. 1 and 2) and on page 4.

## CLASSIFICATION OF LUBRICANTS

Oils and lubricants are classified and graded according to standards recommended by the Society of Automotive Engineers (SAE), the American Petroleum Institute (API) and the National Lubricating Grease Institute (NLGI).

### *Engine Oil*

The SAE grade number indicates the viscosity of engine oils, for example SAE 30, which is a single grade oil. Engine oils are also identified by a dual number, for example SAE 10W-30, which indicates a multigrade oil.

The API designation indicates the classification of engine oils for use under certain operating conditions. Only engine oils designated "For Service MS" should be used. These oils contain sufficient chemical additives to provide maximum engine protection. Both the SAE grade and the API designation must be found on the container.

### *Gear Lubricants*

The SAE grade number also indicates the viscosity of Multi-Purpose Gear Lubricants, defined by MIL-L-2105B. An example is SAE 75, which is a light viscosity lubricant.

### *Lubricants—Greases*

Semi-solid grease lubricants, such as specified for propeller shaft universal joints, bear the NLGI designation. They are further classified as grades "0" or "2."

MyMopar.com

# LUBRICATION AND MAINTENANCE CHART

## NORMAL SERVICE

**Engine Coolant**—Check level and/or anti-freeze every 2 months.

**PSF** **Power Steering Reservoir** — Check level every 6 months. Add fluid, if necessary, to restore to prescribed level.

**Battery**—Check level every 2 months.

**Carburetor Fuel Filter** — Replace every 24,000 miles or every 2 years, whichever occurs first.

**Engine Oil Dipstick**—When refueling, check engine oil level.

**Carburetor Air Cleaner**—Paper Element Type—Clean element every 6 months and replace every 2 years. Oil Bath Type—Check sediment level every second oil change. Clean and reoil with SAE 10W-30 engine oil once a year.

**CC** **Carburetor Choke Shaft**—Apply solvent to end of shaft, where it enters air horn, every 6 months.

**S** **Manifold Heat Control Valve**—Apply solvent to each end of valve shaft every 6 months.

**HL or MP** **Manual Steering Gear**—Check level every 6 months. Add lubricant, if necesssary, to cover worm gear.

**MML or AMG (2)** **Column-Mounted Manual Transmission Gearshift Controls**—If noisy, or shifting effort is objectionable, lubricate contact surfaces.

**HTF** **Brake Master Cylinder**—Check level every 6 months. If below ¼ inch from top of reservoir, add fluid to restore level.

**MML** **Front Suspension Ball Joints**—Inspect seals and joints every 6 months, or whenever car is serviced for any other reason. Replace damaged seals and joints. Relubricate every 3 years or 36,000 miles, whichever occurs first.

**MML** **Steering Linkage Ball Joints**—Inspect seals and joints every 6 months, or whenever car is serviced for any other reason. Replace damaged seals and joints. Relubricate every 3 years or 36,000 miles, whichever occurs first.

**MML or AMG (2)** **Clutch Torque Shaft Bearings**—Inspect for wear and relubricate every 3 years or 36,000 miles, whichever occurs first.

**MML or AMG (2)** **Clutch Release Bearing Sleeve, Release Fork and Fork Pivot**—If effort required to depress pedal is excessive or linkage is noisy, lubricate contact surfaces.

**AA or MP** **Manual Transmission**—Check fluid level every 6 months. If below bottom of filler hole, add lubricant to restore level.

**EO** **Floor Mounted Manual Transmission Gearshift Controls**—If operation becomes difficult, apply a few drops of light engine oil to the mechanism from under the vehicle.

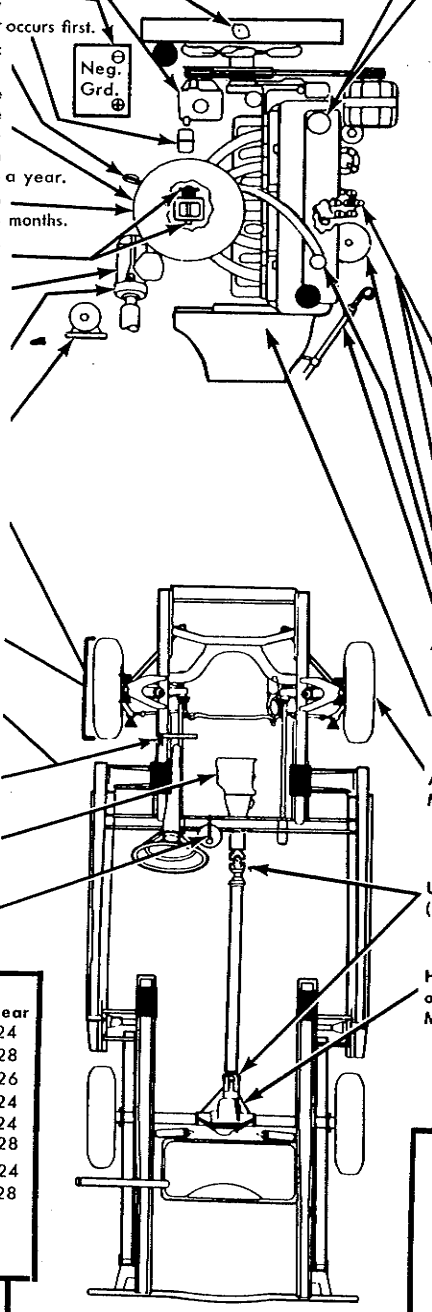


**EO** **Oil Filler Pipe Breather Cap (1)**—Wash in kerosene and reoil with SAE 30 engine oil every 6 months.

**EO** **Engine Oil**—Drain and refill every 3 months or 4,000 miles, whichever occurs first. See Viscosity Chart below:

**Multigrades**

**SAE 10W-30 or SAE 20W-40** Where temperatures are consistently above 32°F.

**SAE 10W-30** Suitable for year-long operation in many parts of the U.S.; may be used where temperatures occasionally drop as low as −10°F.

**SAE 5W-20** Recommended where minimum temperatures are consistently below +10°F.

**Single Grades**

**SAE 30** Where temperatures are consistently above 32°F.

**SAE 10W** Where temperatures range between +32°F. and −10°F.

**DCL** **Distributor Cam and Rubbing Block**—When servicing breaker contacts, apply thin film of lubricant to cam and block surfaces.

**EO** **Distributor Rotor Felt Wick**—When servicing breaker contacts, apply 2 or 3 drops light engine oil to wick under rotor.

**EO** **Distributor Oil Cup**—Apply 5 to 10 drops light engine oil to cup every 6 months.

**Engine Oil Filter**—Replace every second oil change.

**Crankcase Ventilation System (1)**—Inspect system and service every 6 months.

**AA** **Automatic Transmission**—Check fluid level every 6 months. Add fluid, if necessary, to restore to prescribed level.

**Engine Tune-Up**—Evaluate engine performance every 12 months or 2,000 miles, whichever occurs first, and tune, if necessary.

**AMG (2) MML** **Front Brake Assemblies and Wheel Bearings**—Inspect brake linings for wear and wheel bearings for lubricant every 18 months or 18,000 miles, whichever occurs first. Also, lubricate pedal bushings.

**UJ (O)** **Universal Joints**—Inspect seals for external leakage or damage every 6 months. Disassemble and relubricate only if leakage is noted.

**HL or MP/SGL** **Rear Axle and Sure Grip**—Check level every 6 months. Add prescribed fluid, if necessary, to restore to proper level.

**Body Mechanisms**—See Body Maintenance Section.

(1) See "Crankcase Ventilation System Servicing."

### TIRE PRESSURES (PSI) (COLD)

| Models | Front | Rear |
|---|---|---|
| Valiant—All models except Station Wagons | 24 | 24 |
| Valiant—Station Wagons | 24 | 28 |
| Valiant—Barracuda exc. Formula "S" | 24 | 26 |
| Valiant—Barracuda Formula "S" | 24 | 24 |
| Belvedere—All models except Station Wagons | 24 | 24 |
| Belvedere—Station Wagons | 24 | 28 |
| Fury—All models except Station Wagons | 24 | 24 |
| Fury—Station Wagons | 24 | 28 |

Above pressures for Average Rated Load. See "Tires", Group 22, for tire sizes and additional pressure recommendations.

### KEY TO LUBRICANTS

| | | Part No.* |
|---|---|---|
| AA | Automatic Transmission Fluid, AQ-ATF, Suffix "A" | 1843314 |
| AMG (2) | Automotive Multi-Purpose Grease—NLGI-Grade 2 | |
| CC | Carburetor Cleaner | 1643273 |
| DCL | Cam Lubricant | 1473595 |
| EO | Engine Oil | |
| HL | Hypoid Lubricant | 2585317 |
| HTF | High Temperature Brake Fluid | 2421352 |
| MML | Multi-Mileage Lubricant | 2525035 |
| MP | Multi-Purpose Gear Lubricant | |
| PSF | Power Steering Fluid | 2084329 |
| S | Manifold Heat Control Valve Solvent | 1879318 |
| UJ (O) | Universal Joint Grease, NLGI-Grade 0 | |
| SGL | Sure-Grip Lubricant | 2585318 |

*See Alternate Specifications In Individual Paragraphs.

■ Position for lift adapter
▲ Prepacked bearing
● Cooling system drain

**PLYMOUTH 6**

NN676

### CAPACITIES

| | |
|---|---|
| Engine Oil | 4 qts. |
| (Add 1 qt. when replacing filter) | |
| Cooling System | |
| Valiant (170 Cu. In. Eng.) | 12 qts. |
| Valiant (225 Cu. In. Eng.) | 13 qts.* |
| Belvedere and Fury | 13 qts.** |
| (Add 1 qt. for heater) | |
| Rear Axle | |
| Valiant | 2 pts. |
| Belvedere (All exc. Sta. Wag.) | 2 pts. |
| Belvedere Sta. Wag. and Fury | 4 pts. |
| Transmission | |
| TorqueFlite | 16 pts. |
| Manual—3-Speed | 6.5 pts. |
| Fuel Tank | |
| Valiant | 18 gals. |
| Belvedere | 19 gals. |
| Fury (All exc. Sta. Wag.) | 25 gals. |
| Fury Sta. Wag. | 22 gals. |
| (See "Fuel" Section for proper cap application and fuel tank venting.) | |

*w/Trl. Tow. or A/C and CAP 14 qts.
**w/HD Rad. or A/C 14 qts.

***Fig. 1—Lubrication Chart (6-Cyl. Models)***

MyMopar.com

# LUBRICATION AND MAINTENANCE CHART

## NORMAL SERVICE

**PSF** **Power Steering Reservoir**—Check level every 6 months. Add fluid, if necessary, to restore to prescribed level.

**Battery**—Check level every 2 months.

**EO** **Oil Filler Pipe Breather Cap (1)**—Wash in kerosene and reoil with SAE 30 engine oil every 6 months.

**EO** **Engine Oil**—Drain and refill every 3 months or 4,000 miles, whichever occurs first. See Viscosity Chart below:

**Multigrades**

**SAE 10W-30 or SAE 20W-40** Where temperatures are consistently above 32°F.

**SAE 10W-30** Suitable for year-long operation in many parts of the U.S.; may be used where temperatures occasionally drop as low as −10°F.

**SAE 5W-20** Recommended where minimum temperatures are consistently below +10°F.

**Single Grades**

**SAE 30** Where temperatures are consistently above 32°F.

**SAE 10W** Where temperatures range between +32°F. and −10°F.

**SGL or MP** **Manual Steering Gear**—Check level every 6 months. Add lubricant, if necessary, to cover worm gear.

**MML or AMG (2)** **Column-Mounted Manual Transmission Gearshift Control**—If noisy or shifting effort is objectionable, lubricate contact surfaces.

**HTF** **Brake Master Cylinder**—Check level every 6 months. If below ¼ inch from top of reservoir, add fluid to restore level.

**MML** **Front Suspension Ball Joints**—Inspect seals and joints every 6 months, or whenever car is serviced for any other reason. Replace damaged seals and joints. Relubricate every 3 years or 36,000 miles, whichever occurs first.

**MML** **Steering Linkage Ball Joints**—Inspect seals and joints every 6 months, or whenever car is serviced for any other reason. Replace damaged seals and joints. Relubricate every 3 years or 36,000 miles, whichever occurs first.

**MML or AMG (2)** **Clutch Torque Shaft Bearings**—Inspect for wear and relubricate every 3 years or 36,000 miles, whichever occurs first.

**MML or AMG (2)** **Clutch Release Bearing Sleeve, Release Fork and Fork Pivot**—If effort required to depress pedal is excessive or linkage is noisy, lubricate contact surfaces.

**EO** **Floor-Mounted Manual Transmission Gearshift Controls**—If operation becomes difficult, apply a few drops of light engine oil to the mechanism from under the vehicle.

**AA or MP** **Manual Transmission**—Check fluid level every 6 months. If below bottom of filler hole, add fluid to restore to prescribed level.

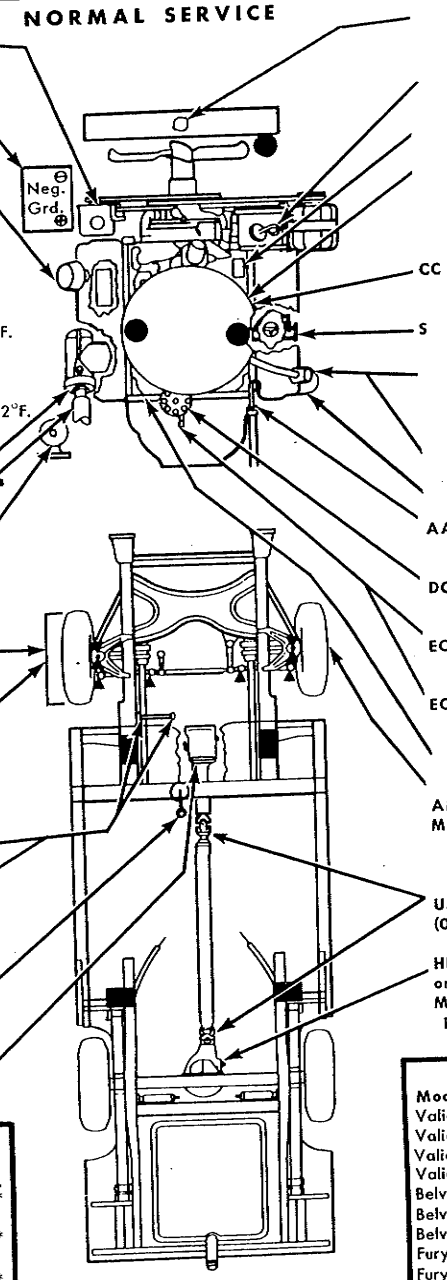


**Engine Coolant**—Check level and/or anti-freeze every 2 months.

**Engine Oil Dip Stick**—When refueling, check engine oil level.

**Carburetor Fuel Filter**—Replace every 24,000 miles or every 2 years, whichever occurs first.

**Carburetor Air Cleaner**—Paper element type—Clean element every 6 months and replace every 2 years. Oil Bath Type—Check sediment level every second oil change. Clean and reoil with SAE 10W-30 engine oil once a year.

**Carburetor Choke Shaft**—Apply solvent to each end of shaft, where it enters air horn, every 6 months.

**Manifold Heat Control Valve**—Apply solvent to each end of valve shaft every 6 months

**Crankcase Ventilation System (1) (With Silenced Air Cleaner)**—Inspect system and service every 6 months.

**Crankcase Ventilation System (1) (With Non-Silenced Air Cleaner)**—Inspect system and service every oil change.

**Engine Oil Filter**—Replace every second oil change.

**Automatic Transmission**—Check fluid level every 6 months. Add fluid, if necessary, to restore to prescribed level.

**Distributor Cam and Rubbing Block**—When servicing breaker contacts, apply thin film of lubricant to cam and block surfaces.

**Distributor Rotor Felt Wick**—When servicing breaker contacts, apply 2 or 3 drops light engine oil to wick under rotor.

**Distributor Oil Cup**—Apply 5 to 10 drops light engine oil to cup every 6 months.

**Engine Tune-up**—Evaluate engine performance every 12 months or 12,000 miles whichever occurs first, and tune, if necessary.

**AMG (2) MML** **Front Brake Assemblies and Wheel Bearings**—Inspect brake linings for wear and wheel bearings for lubricant every 18 months or 18,000 miles whichever occurs first. Also, lubricate pedal bushings.

**UJ (0)** **Universal Joints**—Inspect seals for external leakage or damage every 6 months. Disassemble and relubricate only if leakage is noted.

**HL or MP/SGL** **Rear Axle and Sure-Grip**—Check level every 6 months. Add prescribed fluid, if necessary, to restore to proper level.

**Body Mechanisms**—See Body Maintenance Section.

(1) See "Crankcase Ventilation System Servicing".

**CAPACITIES**

| | | |
|---|---|---|
| Engine Oil (Add 1 qt. when replacing filter) | | 4 qts. |
| Cooling System | Valiant | 18 qts. |
| | Belvedere (273 Cu. In. Engine) | 18 qts.* |
| | Belvedere, Fury (318 Cu. In. Engine) | 21 qts.** |
| | Belvedere (361, 383 Cu. In. Engines) | 17 qts.*** |
| | Fury (383, 426 Cu. In. Engines) (Add 1 qt. for heater) | 17 qts.*** |
| Rear Axle | Valiant | 2 pts. |
| | Belvedere, Fury | 4 pts. |
| Transmission TorqueFlite | Valiant | 16 pts. |
| | Belvedere, Fury | 18.5 pts.# |
| Manual | 3-Speed Valiant, Belvedere, Fury | 6 pts. |
| | 4-Speed Valiant | 8 pts. |
| | 4-Speed Belvedere, Fury | 9 pts. |
| Fuel Tank | Valiant | 18 gals. |
| | Belvedere | 19 gals. |
| | Fury all except Station Wagon | 25 gals. |
| | Fury Station Wagon | 22 gals. |

(See "Fuel" Section for proper cap application and fuel tank venting.)

# Belvedere w/273 Cu. In. Engine.....16 qts.
*w/Trl. Tow.,.....19 qts.
**w/Trl. Tow., A/C or HD Rad.....22 qts.
***w/Trl. Tow., A/C or HD Rad.....18 qts.

■ Position for lift adapter
▲ Prepacked bearing
● Cooling system drain

**PLYMOUTH V-8**

NN677

**TIRE PRESSURES (PSI) (COLD)**

| Models | Front | Rear |
|---|---|---|
| Valiant—All models except Station Wagons | 24 | 24 |
| Valiant—Station Wagons | 24 | 28 |
| Valiant—Barracuda exc. Formula "S" | 24 | 26 |
| Valiant—Barracuda Formula "S" | 24 | 24 |
| Belvedere—All models except Station Wagons | 24 | 24 |
| Belvedere—Station Wagons | 24 | 28 |
| Belvedere—Satellite | 24 | 24 |
| Fury—All models except Station Wagons | 24 | 24 |
| Fury—Station Wagons | 24 | 28 |

Above pressures for Average Rated Load. See "Tires", Group 22, for tire sizes and additional pressure recommendations.

**KEY TO LUBRICANTS**

| | | Part No.* |
|---|---|---|
| AA | Automatic Transmission Fluid, AQ-ATF, Suffix "A" | 1843314 |
| AMG (2) | Automotive Multi-Purpose Grease—NLGI-Grade 2 | 1643273 |
| CC | Carburetor Cleaner | 1473595 |
| DCL | Cam Lubricant | |
| EO | Engine Oil | |
| HL | Hypoid Lubricant | 2585317 |
| HTF | High Temperature Brake Fluid | 2421352 |
| MML | Multi-Mileage Lubricant | 2525035 |
| MP | Multi-Purpose Gear Lubricant | |
| PSF | Power Steering Fluid | 2084329 |
| S | Manifold Heat Control Valve Solvent | 1879318 |
| UJ (0) | Universal Joint Grease, NLGI-Grade 0 | |
| SGL | Sure-Grip Lubricant | 2585318 |

*See Alternate Specifications In Individual Paragraphs.

*Fig. 2—Lubrication Chart (V-8 Models)*

MyMopar.com

## LUBRICATION AND MAINTENANCE SERVICES

| SERVICE INTERNAL | ITEM | PAGE | Replace | Check Fluid Level | Inspect and/or Clean | Lubricate | Service |
|---|---|---|---|---|---|---|---|
| 3 Months or 4,000 Miles, whichever occurs first | Engine Crankcase Oil | 12 | X | | | | |
| Every Engine Oil Change | Closed Crankcase Ventilation System (with non-silenced air cleaner) | 15 | | | | | X |
| Every Second Oil Change | Engine Oil Filter | 12 | X | | | | |
| | Rotate Tires | 22 | | | | | X |
| | Carburetor Air Cleaner—Oil Bath | 18 | | | X | | |
| | Carburetor Air Cleaner—Paper | 17 | | | X | | |
| | Crankcase Ventilation System | 13 | | | X | | X |
| | Carburetor Choke Shaft | 18 | | | | | X |
| | Oil Filler Pipe Breather Cap | 13 | | | X | X | X |
| | Manifold Heat Control Valve | 17 | | | | | X |
| | Distributor | 11 | | | | X | |
| | Transmission | 20 | | | X | | |
| Every 6 Months | Rear Axle | 8 | | X | X | | |
| | Steering Gear | 19 | | X | | | |
| | Steering Linkage | 6 | | | X | | |
| | Suspension Ball Joints | 6 | | | X | | |
| | Universal Joints | 19 | | | X | | |
| | Universal Joint Slip Yoke | 19 | | | X | | |
| | Brake Master Cylinder | 9 | | X | | | |
| | Brake Hoses | 9 | | | X | | |
| | Body Mechanisms | 23 | | | X | X | |
| | Headlamp Aiming | 11 | | | | | X |
| Every Year | Cooling | 10 | | | | | X |
| | Crankcase Ventilation Valve | 13 | X | | | | |
| | Carburetor Air Cleaner—Oil Bath | 18 | | | | | X |
| Every 12 Months or 12,000 Miles, whichever occurs first | Engine Performance Evaluation | 16 | | | | | X |
| Every 18 Months or 18,000 Miles, whichever occurs first | Brakes, Brake Linings and Brake Linkage Bushings | 9 | | | X | | X |
| | Front Wheel Bearings | 21 | | | X | | |
| Every 2 Years | Carburetor Air Filter | 15 | X | | | | |
| Every 2 Years or 24,000 Miles, whichever occurs first | Fuel Filter | 18 | X | | | | |
| Every 3 Years or 36,000 Miles, whichever occurs first | Front Suspension Ball Joints | 6 | | | | X | |
| | Steering Tie Rod Ends | 6 | | | | X | |
| | Clutch Torque Shaft | 10 | | | | X | |
| When Necessary | Spark Plugs—See Engine Performance Evaluation | 16 | | | | | X |
| | Speedometer Cable | 23 | | | | X | |
| | Clutch Release Bearing Sleeve, Fork Fingers and Pivot | 10 | | | | X | |
| | Column-Mounted Gearshift Linkage | 21 | | | | X | |
| | Floor-Mounted Gearshift Lever | 21 | | | | X | |
| | Wheel Brakes | 9 | | | | | X |
| | Parking Brakes | 10 | | | | | X |
| Points That Should Not Be Lubricated | | 31 | | | | | |

MyMopar.com

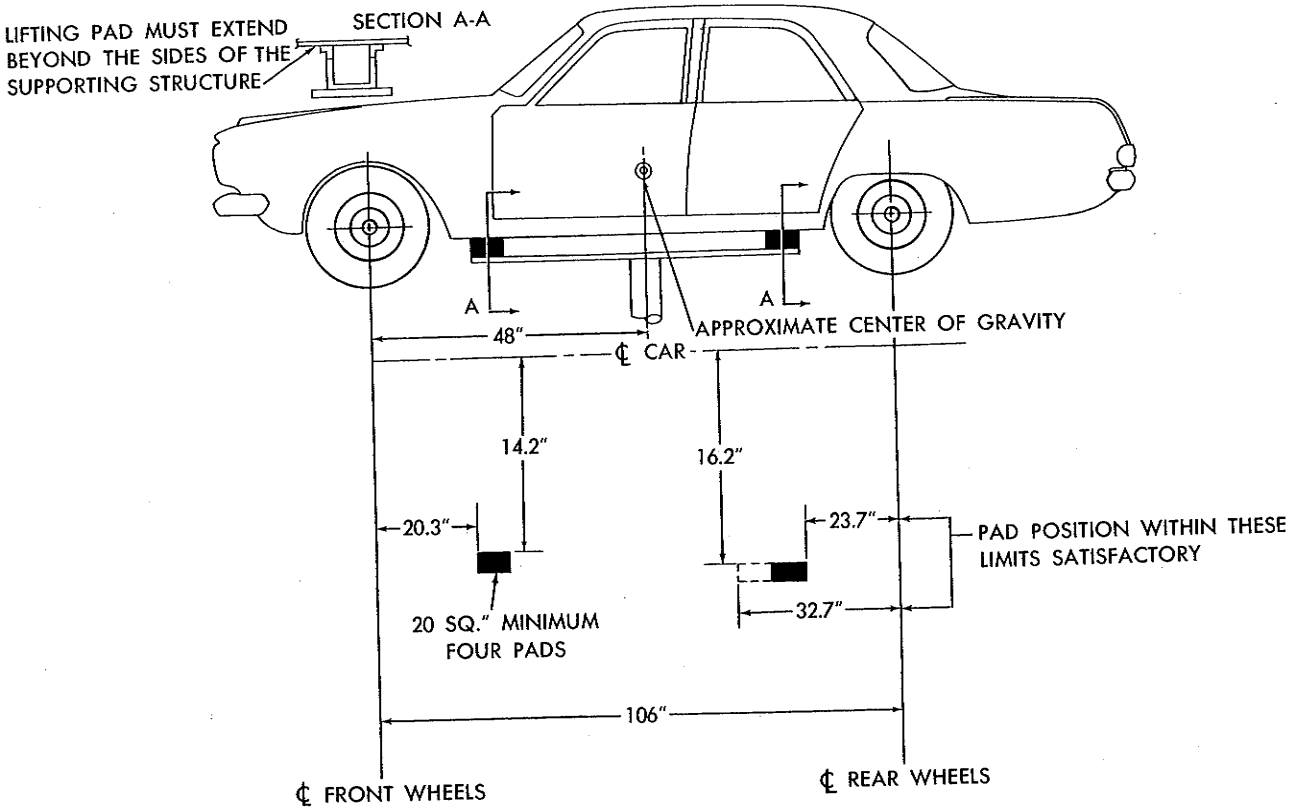


***Fig. 3—Support Locations for Frame Contact Hoisting (Valiant Models)***

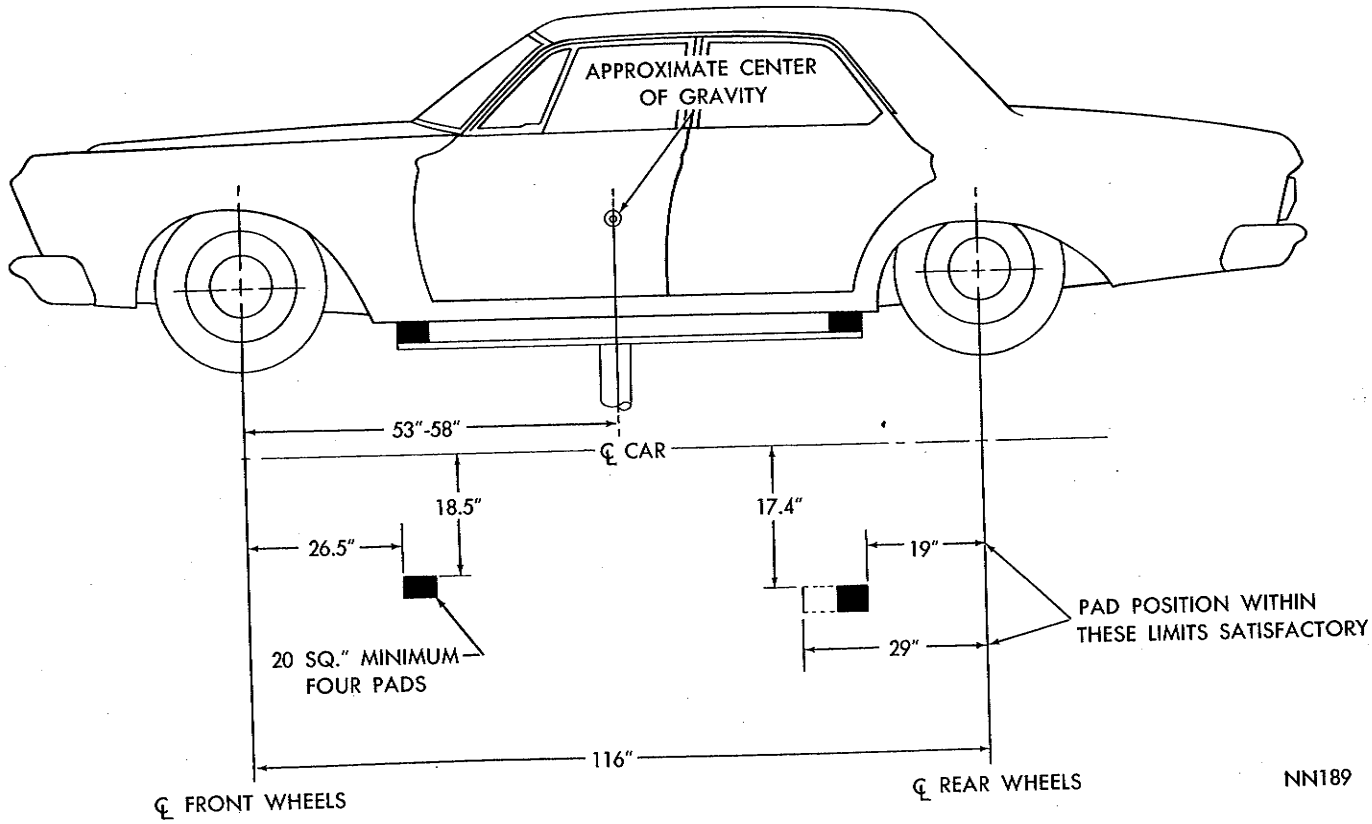


***Fig. 4—Support Locations for Frame Contact Hoisting (Belvedere Models)***

MyMopar.com

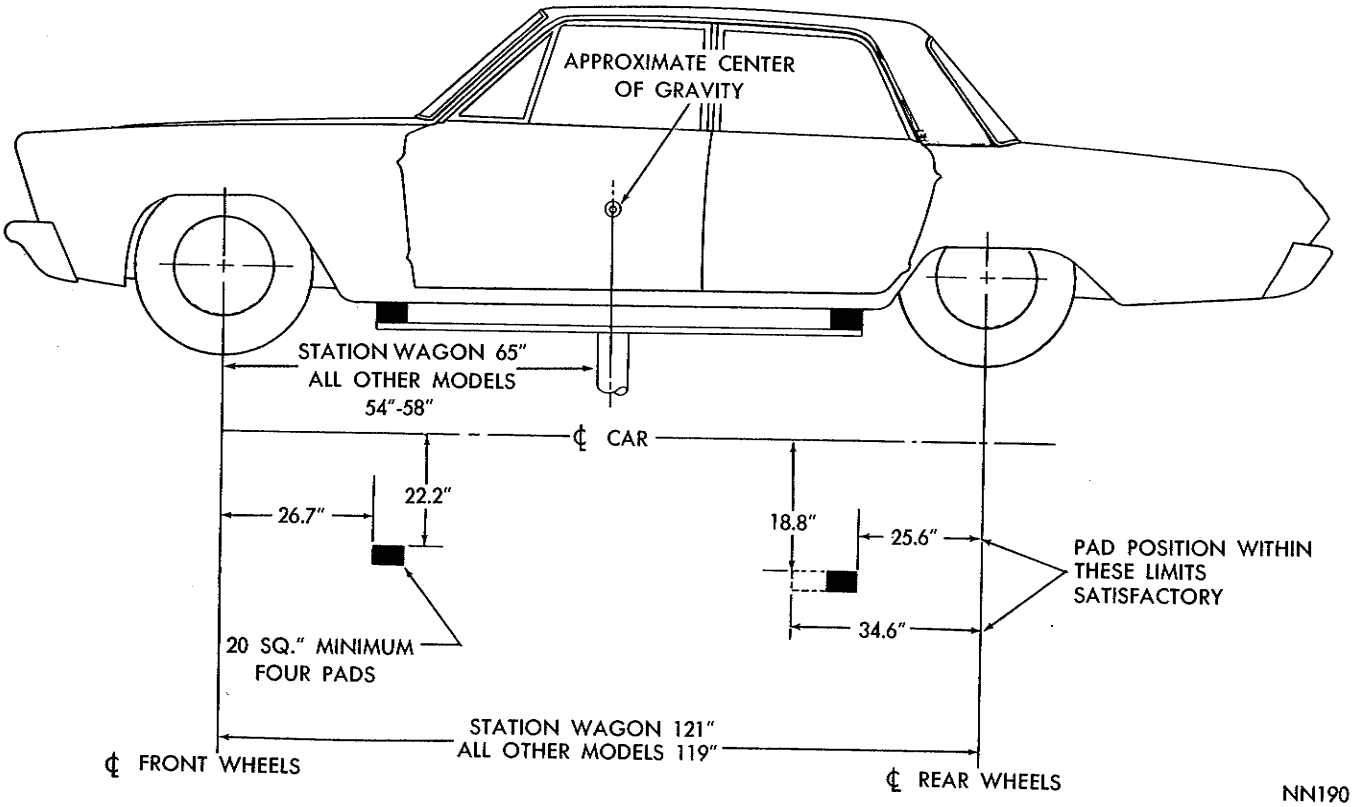


***Fig. 5—Support Locations for Frame Contact Hoisting (Fury Models)***

## HOISTING

Special care should be taken when raising the vehicle on a frame contact type hoist. The hoist must be equipped with the proper adapters in order that the vehicle will be supported in the correct locations (Figs. 3, 4 and 5).

Conventional hydraulic hoists may be used after determining that the adapter plates will make firm contact with the lower control arms and the rear axle housing.

A regular floor jack may be used under the rear axle housing, or under the front suspension lower control arms, **however, a floor jack must never be used on any parts of the underbody.**

**CAUTION: Do not attempt to raise one entire side of the vehicle by placing a jack midway between a front and rear wheel. This practice may result in permanent damage to the body.**

The bumpers are designed to accept a bumper jack in an emergency, if it becomes necessary to change a tire on the road. Notches are provided in the bumpers for the purpose of raising the vehicle with the bumper jack.

## CHASSIS LUBRICATION

### *Front Suspension Ball Joints*

The front suspension ball joints (Figs. 6, 7 and 8) are semi-permanently lubricated with special lubricant at the factory. Relubrication is required every 3 years or 36,000 miles, whichever occurs first. The ball joints, however, should be inspected every six months, or whenever vehicle is serviced for other reasons, for damage to the seals which result in loss of lubricant. Clean accumulated dirt and lubricant from outside surface of seals to permit thorough inspection.

Replace damaged seals or joints immediately to prevent contamination of lubricant or damage to parts. Lubricate ball joints, if necessary.

When lubricating control arm ball joints, use only the special long-life chassis greases intended for this purpose. Multi-Mileage Lubricant, Part Number 2525035, is a lubricant of this type recommended for all Chrysler Corporation vehicles. Remove threaded plug from each ball joint and **temporarily** install lubrication fittings. Inject lubricant until it flows freely from seal bleed area at the base of the seal. Stop when seal begins to balloon. Remove fittings and reinstall threaded plugs.

**If high pressure lubrication equipment is used, stop filling when the lubricant begins to flow freely from the bleed area at the base or at the top of the seal, or if the seal begins to balloon.**

### *Steering Linkage Ball Joints*

The four tie rod end ball joints and the steering gear arm ball joint (Figs. 9, 10 and 11) are semi-permanently lubricated with a special lubricant at the factory.

MyMopar.com

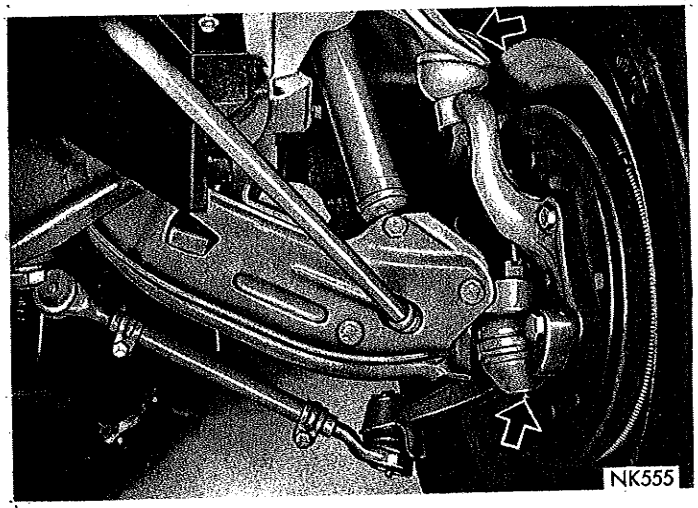


*Fig. 6—Upper and Lower Ball Joint Lubrication Points (Valiant Models)*

Relubrication of tie rod ball joints is required every 3 years or 36,000 miles, whichever occurs first. The ball joints, however, should be inspected every six months, or whenever vehicle is serviced for other reasons, for damage to seals which can result in loss of lubricant.

When inspecting ball joints, clean accumulated dirt and lubricant from outside surfaces of seals to permit thorough inspection. Replace damaged seals or joints immediately to prevent contamination of lubricant or failure of the part. Lubricate ball joints, if necessary.

When lubricating steering linkage ball joints, use only the special long-life chassis greases intended for this purpose. Multi-Mileage Lubricant Part Number 2525035 is a lubricant of this type recommended for all Chrysler Corporation vehicles. Remove threaded plug from each ball joint and **temporarily** install lubrication fittings. Inject lubricant until it flows freely from seal bleed area at top or base of seal. Stop when seal begins to balloon. Remove fittings and reinstall threaded plugs.

**High pressure lubrication equipment may be used if care is taken to use an extremely slow flow rate to allow time to observe the lubricant bleed from the top or base of the seal.**

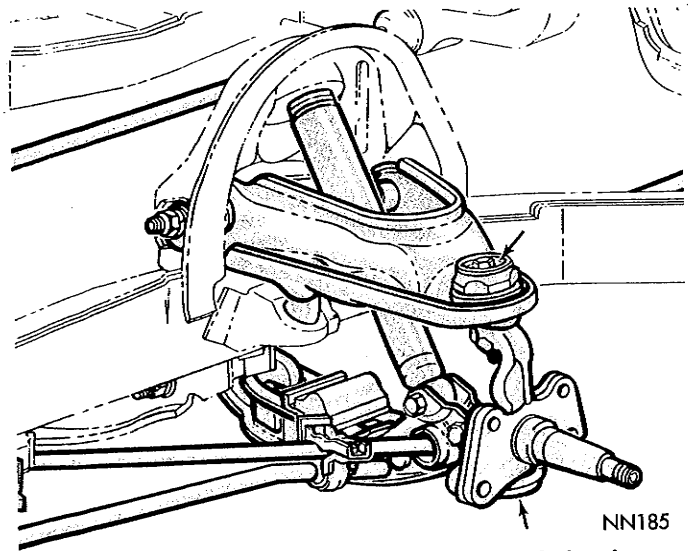


*Fig. 7—Upper and Lower Ball Joint Lubrication Points (Belvedere Models)*

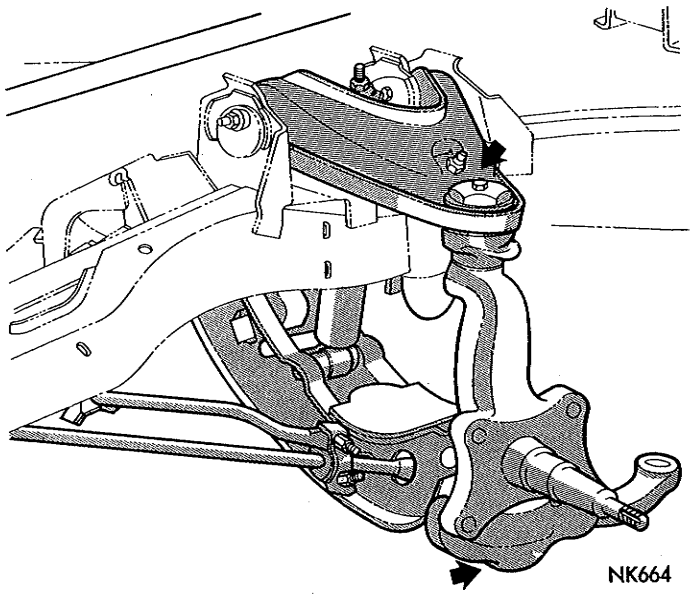


*Fig. 8—Upper and Lower Ball Joint Lubrication Points (Fury Models)*

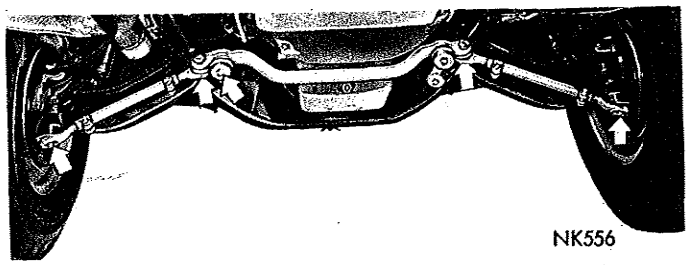


*Fig. 9—Steering Linkage Lubrication Points (Valiant Models)*

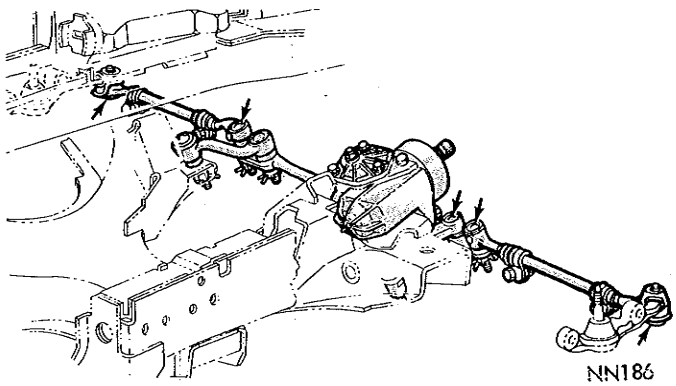


*Fig. 10—Steering Linkage Lubrication Points (Belvedere Models)*

MyMopar.com

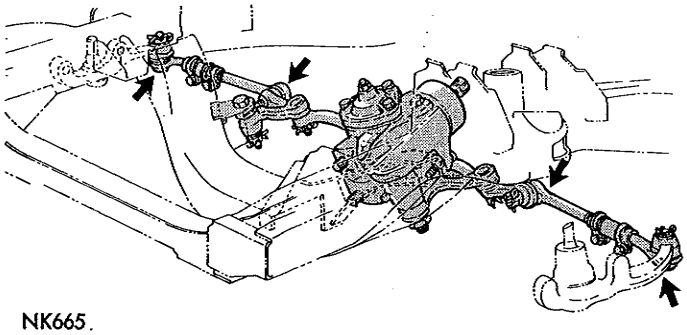


*Fig. 11—Steering Linkage Lubrication Points (Fury Models)*

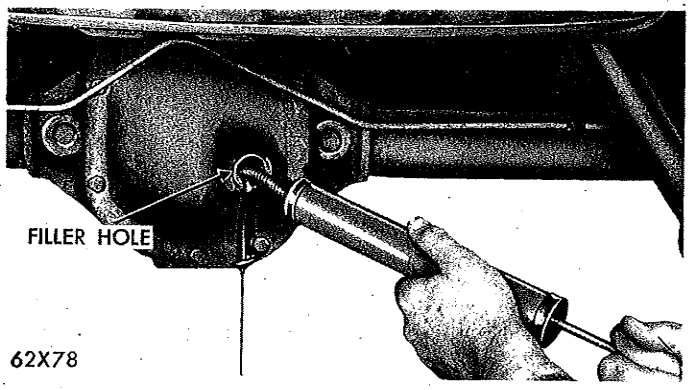


*Fig. 12—Removing Rear Axle Lubricant (Valiant Models)*

## REAR AXLE

### *Standard and Sure-Grip*

The lubricant installed in the rear axle at time of assembly is a high quality product and regularly scheduled changes of the lubricant are not recommended in vehicles where operation is classified as normal passenger car service. The only exceptions, however, would be where the lubricant has become contaminated with water, or in the case of the **standard** rear axle, to provide the correct viscosity grade for the anticipated temperature range, as indicated by the accompanying table:

| Anticipated Temperature Range | | Viscosity Grade |
|---|---|---|
| Above | −10°F. | SAE 90 |
| As low as | −30°F. | SAE 80 |
| Below | −30°F. | SAE 75 |

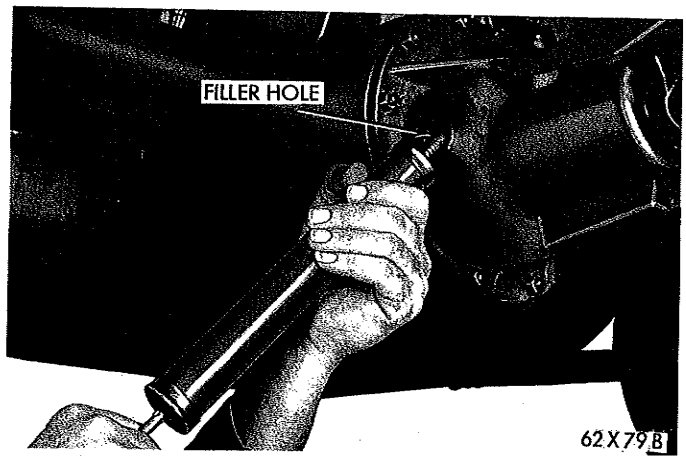


*Fig. 13—Removing Rear Axle Lubricant (Belvedere and Fury Models)*

If necessary to change lubricant, remove old lubricant with a suction pump (Figs. 12 or 13).

The fluid level, however, should be checked every six months. When checking the level, vehicle should be in a level position. The level of the fluid should be as indicated in the accompanying table:

To restore level in the standard rear axle, if necessary, add sufficient quantity of multi-purpose gear lubricant, as defined by MIL-L-2105B. Such a lubricant is available under Part Number 2585317, Hypoid Gear Lubricant.

Use the correct viscosity grade for the anticipated temperature ranges previously mentioned.

In Sure-Grip axles, use only the special multi-purpose gear lubricant intended for use in limited-slip differentials. Such a lubricant is available under Part Number 2585318, Special Sure-Grip Lubricant.

### *Trailer Towing Service*

For vehicles equipped for trailer towing service, the rear axle lubricant should be changed periodically. Drain and refill the axle with the specified lubricant every 36,000 miles or 3 years, whichever occurs first.

If the axle is submerged in water, such as on a boat launching ramp where water can enter the axle vent, and contamination is suspected or evident, replace the lubricant immediately to avoid early axle failure.

| Model | Vehicle Supported on— | Level Location |
|---|---|---|
| Valiant | Wheel-or Axle-Type Hoist-or | Between bottom of filler plug hole to ⅝ inch below-or |
| Valiant | Frame-Type Hoist | At bottom of filler plug hole. |
| Belvedere, Fury V-8<br>Belvedere 6-Cyl. Stat. Wag.<br>Belvedere 6-Cyl. w/Sure-Grip | Wheel-or Axle-Type Hoist-or | Between bottom of filler plug hole to ½ inch below-or |
| Belvedere 6-Cyl. Models exc. Stat. Wag. and with Sure-Grip | Frame-Type Hoist | At bottom of filler plug hole |

MyMopar.com

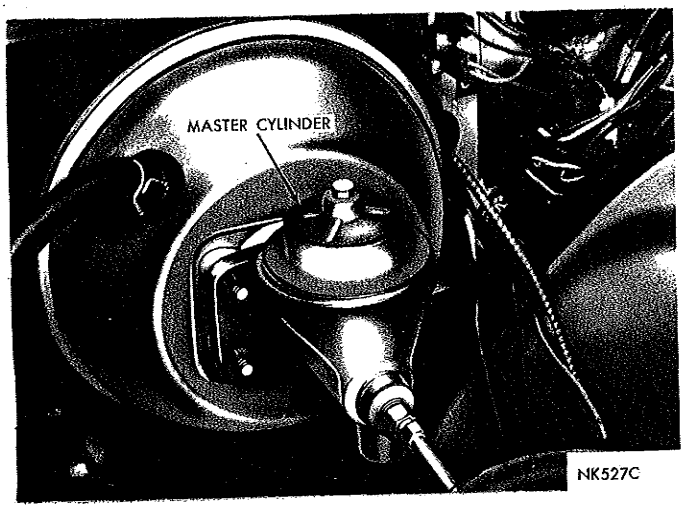


*Fig. 14—Master Cylinder*

## BRAKES

The brakes on all models equipped with drum brakes, except for some police cars and high-performance models, are equipped with self-adjusting features which make it unnecessary to perform major brake adjustments.

Inspect brake linings for wear every 18 months or 18,000 miles, whichever occurs first. At this time, lubricate contact areas of brake shoe supports with a very thin film of high-temperature, silicone type lubricating compound. Such a lubricant is available under Part Number 1881923, Sil-Glide.

To perform this service, remove brake shoes and clean contact areas. Smooth down with sandpaper before applying Sil-Glide.

## HYDRAULIC BRAKE SYSTEM

Every six months check fluid level in master cylinder (Fig. 14). The level should be within one-quarter inch of top of reservoir.

**CAUTION: Before removing master cylinder cover and screw, wipe them clean to prevent dirt and other foreign matter from dropping into reservoir.**

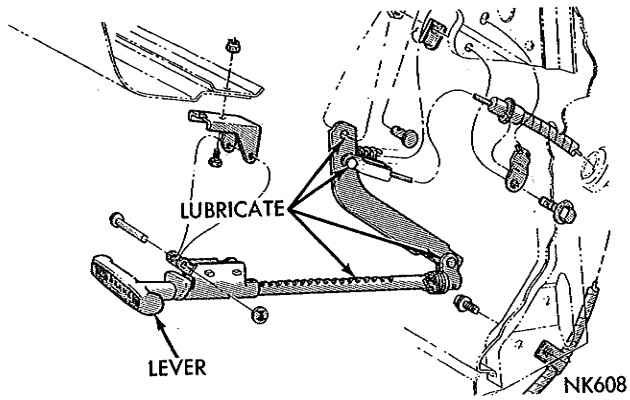


*Fig. 15—Hand-Operated Parking Brake Lubrication Points (Valiant Models)*

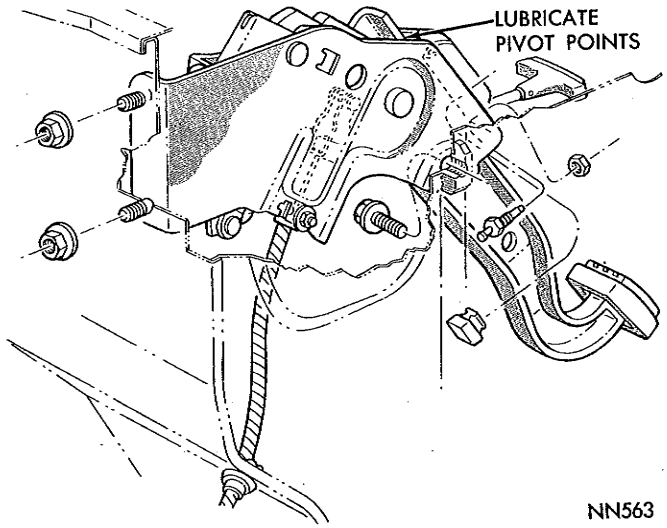


*Fig. 16—Foot-Operated Parking Brake Lubrication Points (Belvedere Models)*

Replenish fluid, when necessary, with Heavy Duty Hydraulic Brake Fluid, conforming to SAE 70R3 for best brake performance and greater safety. Such a fluid is available under Part Number 2421352, Hi-Temp Brake Fluid.

Inspect brake hoses for cracking, abrasions, cuts or tears in outer covering. Examine all connections for fluid leakage and correct where necessary.

The plastic bushings at the upper end of the brake pedal should be serviced every 18 months or 18,000 miles, whichever occurs first, or at the time of major brake service. The bushings, located on the brake pedal pivot on all models and on the lower linkage pivots on Belvedere models equipped with power brakes, should be removed, thoroughly cleaned and

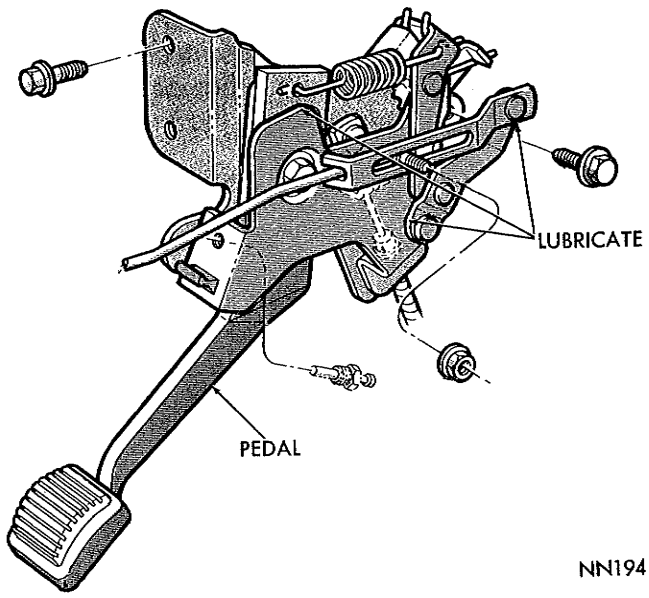


*Fig. 17—Foot-Operated Parking Brake Lubrication Points (Fury Models)*

MyMopar.com

relubricated with an automotive multi-purpose grease such as Multi-Mileage Lubricant, Part Number 2525035.

## PARKING BRAKE MECHANISM

Valiant Models use a hand-operated parking brake lever (Fig. 15). Belvedere and Fury Models use a foot-operated lever (Fig. 16).

Pivot points indicated (Figs. 15, 16 or 17) should be lubricated occasionally to maintain ease of operation. Apply a film of smooth, white body hardware lubricant conforming to NLGI, grade 1. Lubriplate, Part Number 1064768, is a type of lubricant recommended for this purpose.

When the hand lever can be pulled out more than four inches, or the foot pedal depressed more than four and one half inches, the brake cable should be adjusted. For adjusting procedure, refer to "Parking Brakes," Group 5.

## CLUTCH LINKAGE (Manual Transmission)

### *Clutch Torque Shaft Bearings*

Inspect clutch torque shaft bearings (Fig. 18) for wear and relubricate every 3 years or 36,000 miles, whichever occurs first. To perform this service, refer to "Clutch," Group 6. After removing torque shaft assembly, disassemble and thoroughly clean all parts in a suitable solvent and inspect for wear. Damaged bearings and/or ball studs should be replaced.

When reassembling shaft, coat inside surfaces at ends of shaft, inside and outside surfaces of bearings and ball studs (Fig. 18) with Multi-Mileage Lubricant, Part Number 2525035, or Automotive Multi-Purpose Grease, NLGI grade 2.

### *Clutch Release Bearing Sleeve, Release Fork and Fork Pivot*

Whenever the effort required to depress the clutch pedal becomes excessive, or when servicing clutch torque shaft bearings, lubricate the sleeve, fork and pivot (Fig. 18). To gain access to these areas, remove clutch inspection plate at bottom of clutch housing, the fork seal and the fork.

**CAUTION: Care must be taken to avoid getting lubricant on clutch disc and/or pressure plate.**

Fill cavity in sleeve and coat release fork pads on sleeve (Fig. 18) with Multi-Mileage Lubricant, Part Number 2525035, or Automotive Multi-Purpose Grease, NLGI grade 2. Apply a film of same lubricant on contact areas of fork fingers, pivot contact area of fork and fork pivot.

## COOLING SYSTEM

Inspect coolant level every two months and refill as necessary.

Drain, flush and refill cooling system once a year, preferably in the Fall. If the system contains a considerable amount of sediment, clean and flush with a reliable cooling system cleaner. Follow with a thorough rinsing to remove all deposits.

Drain V-8 engine cooling system by removing drain plugs in sides of cylinder block and open drain cock in lower radiator tank. On 6-cylinder engines, remove the single drain plug in right side of engine and open drain cock in lower radiator tank. **Discard old solutions.**

All models are equipped with 180 degree thermostats and only permanent type anti-freeze should be used. Alcohol base anti-freeze products should not be used because of their low boiling point. The use of 160 degree thermostats is not recommended, especially for vehicles equipped with air-conditioning.

Refill cooling system with water and a suitable high quality, permanent type anti-freeze, in sufficient quantity to protect the system against freezing during cold weather seasons. A suitable high quality permanent type anti-freeze is available under Part Number 1316209.

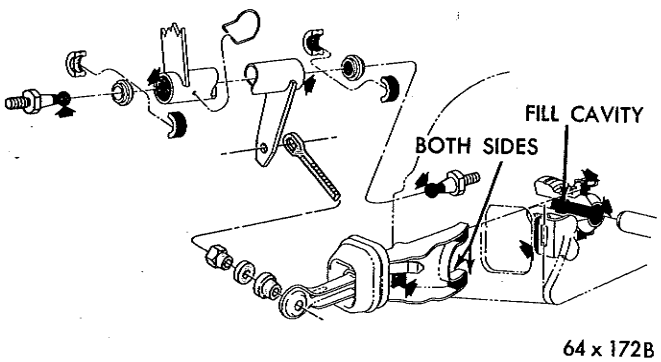


*Fig. 18—Clutch Torque Shaft and Linkage Lubrication Points (Typical)*

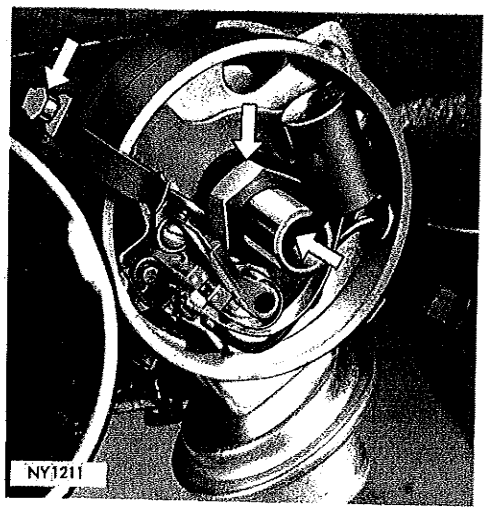


*Fig. 19—Distributor Lubrication Points (6-Cyl. Engines)*

MyMopar.com

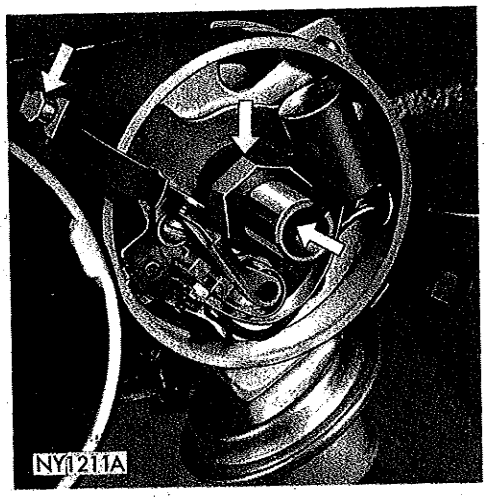


*Fig. 20—Distributor Lubrication Points (V-8 Engines)*

When vehicle is operated in areas where protection from freezing is not required, and vehicle is not equipped with Air Conditioning, refill cooling system with clean water and add a high quality corrosion inhibitor, such as Chrysler Rust Resistor, Part Number 2421778. This need not be done until the first yearly service.

## ALTERNATOR

The alternator is provided with prelubricated bearings, which require no periodic lubrication.

The outside of the alternator should be wiped clean and ventilating holes inspected for an accumulation of dirt which would obstruct the flow of air. Refer to "Electrical," Group 8, for complete servicing of the alternator.

## BATTERY

Check fluid level every two months, and more often in hot weather and on long trips. Fill cells, if necessary, using only water of a known low mineral content, until water is ⅜ inch above plates. **Do not overfill.**

Check specific gravity, using a reliable hydrometer every 12 months or 12,000 miles, whichever occurs first, or more often if there is excessive use of water. Clean battery posts and cable terminals and tighten terminals. Coat connections with light mineral grease or petrolatum.

Refer to "Electrical," Group 8, for complete servicing.

## DISTRIBUTORS

Apply 5 to 10 drops of light engine oil into distributor oil cup (Fig. 19 or 20) every six months.

Whenever breaker points are serviced, lubricate cam surfaces. Wipe old lubricant from cam and rubbing block (Fig. 19 or 20) and apply a thin film of cam lubricant. Such a lubricant is available under Part Number 1473595, Cam Lubricant. At this time, apply 2 or 3 drops of light engine oil to felt wick under rotor.

**CAUTION: Avoid over-oiling and applying an excessive amount of cam lubricant to prevent lubricants from spreading to breaker contacts.**

## HEADLAMPS

One of the most important factors in automobile safety, is the correct aiming of the headlamps. Changes in suspension, such as front suspension height and/or deflection of rear springs due to heavy loading, will change the headlamp beam pattern and may cause unsafe night time driving conditions. Therefore, it is recommended that headlamp aiming be checked every six months.

If a vehicle is to be loaded abnormally, such as for a vacation trip, or with a salesman's products, the headlamp aiming should be checked and adjusted to serve the new conditions. Refer to "Lighting System," Group 8, for adjusting procedures.

## WINDSHIELD WIPER BLADES

Long exposure to heat and road splash tend to harden the rubber wiper blades, thus destroying their efficiency. When blades smear or in general do not satisfactorily clean the windshield, they should be replaced.

To replace, depress the release on top of blade bridge and slide out rubber blade. Slide new rubber blade refill into bridge to lock it in place. Refer to Parts List for correct rubber blade refill.

## ENGINE OIL—SELECTION OF

For best performance, and to provide for maximum protection of all engines for all types of operation, only those lubricants should be selected which:

(a) Conform to the requirements of the API classification "FOR SERVICE MS."

(b) Have the proper SAE grade number for the expected temperature range.

### *Oil Viscosity Recommendations*

#### *Multigrades*

| | |
|---|---|
| SAE 20W-40 or SAE 10W-30 | Where temperatures are consistently above +32°F. |
| SAE 10W-30 | Suitable for year long operation in many parts of the U.S.; may be used where temperatures occasionally drop as low as −10°F. |
| SAE 5W-20 | Recommended where minimum temperatures are consistently below + 10°F. |

#### *Single Grades*

| | |
|---|---|
| SAE 30 | Where temperatures are consistently above + 32°F. |
| SAE 10W | Where temperatures range between + 32°F. and −10°F. |

Low viscosity oils make engine starting easier in cold weather. Modern SAE 5W-20 grade oils have been subjected to extensive engineering evaluation

MyMopar.com

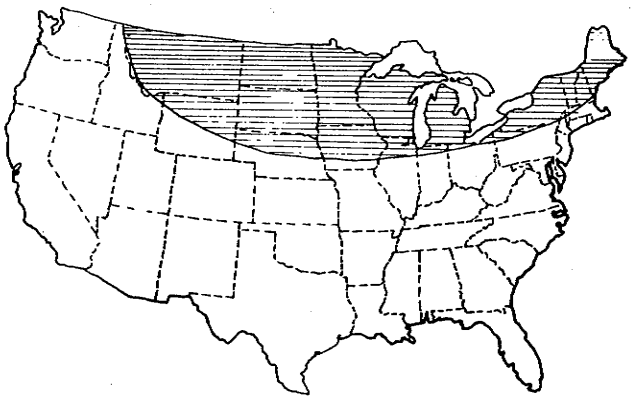


***Fig. 21— Shaded Areas Covers Region Where Minimum Temperatures May be Consistently Below +10°F. During Some Winter Months***

and may be safely used as recommended. As stated in the accompanying chart (Fig. 21) when **minimum** temperatures may be consistently below + 10°F. during some winter months oils of the SAE 5W-20 viscosity may be used. If your region is in the shaded area, SAE 5W-20 oil **should be** used during the winter months.

Lubricants which do not have both an SAE grade number and an MS Service classification on the container **should not** be used.

## MATERIALS ADDED TO ENGINE OILS

It is not necessary to add any other products to engine oils for most types of driving when MS quality oils are used.

In some instances, such as infrequent operation or short trips only, and during break-in after a major overhaul, addition of special materials containing anti-rust and anti-scuff additives is beneficial. A suitable product for this purpose is available under Part Number 1879406, Engine Oil Supplement.

## FREQUENCY OF OIL CHANGES

The engine oil should be changed every three (3) months, or 4,000 miles, whichever comes first.

### *During Break-in*

Cars should be driven moderately during the first 300 miles. After the initial 50 miles, speeds up to 50 to 60 mph are desirable. While cruising, brief full-throttle acceleration contribute to a good break-in. Wide-open throttle accelerations in low gear can be detrimental and should be avoided for at least 500 miles.

The oil installed in the engine at the factory is a high quality lubricant, classified "For Service MS," and **should be retained** until the first regularly scheduled three-month or 4,000-mile oil change, whichever comes first. If it becomes necessary to add

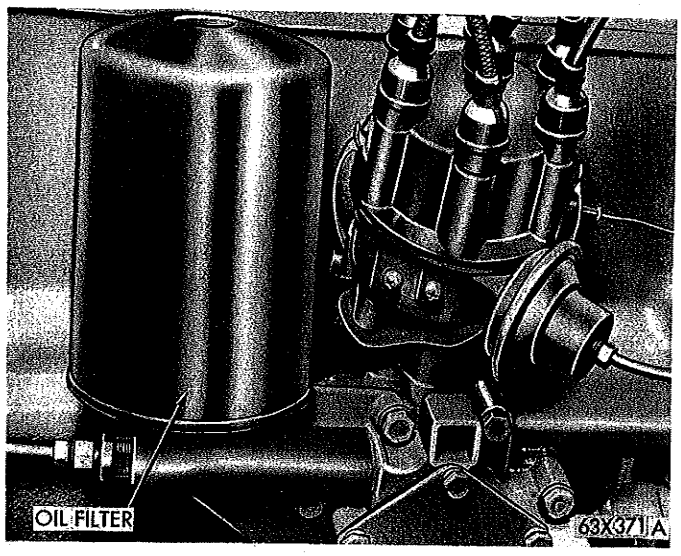


***Fig. 22—Engine Oil Filter (6-Cyl. Engines)***

oil during this initial period, an oil with the "For Service MS" classification and of the proper viscosity grade should be used. **Nondetergent or straight mineral oils must never be used.**

Frequently, a new engine will consume some oil during its first few thousand miles of operation. This should be considered as a normal part of the break-in and not to be interpreted as an indication of difficulty.

### *Severe Operating Conditions*

Severe operating conditions, such as frequent driving on dusty roads, or in sandy geographic areas, or unusually short trip driving in cold weather may reasonably require oil changes more frequently than every three months. Under these conditions, consult and follow the advise of any Chrysler Motors Corporation Authorized Dealer's Service Manager.

### *Taxi and Police Operation*

Severe service, such as taxi and city police driving, which are principally short trip operations including frequent and prolonged idling, require more frequent oil changes on a regular schedule. For this service, it is recommended that engine oil be changed every two months, not to exceed 2,000 miles. Replace filter every second oil change.

## ENGINE OIL FILTER

All engines are equipped with full-flow, throw-away oil filters (Figs. 22 and 23) to provide efficient filtering of engine oil for maximum engine protection.

The filter should be replaced every second oil change. Since filters vary widely in quality, it is recommended that a Chrysler Corporation Engine Oil Filter, or equivalent, be used for replacement to assure most efficient service.

MyMopar.com

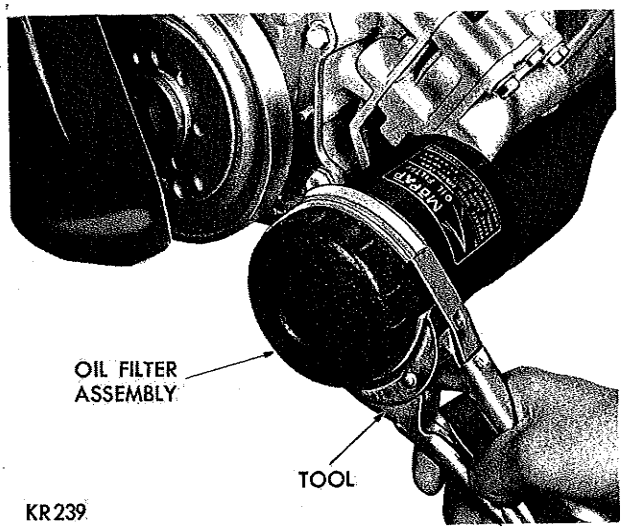


*Fig. 23—Removing Engine Oil Filter (361, 383, 426 Cu. In. Engines)*

## CRANKCASE VENTILATION SYSTEM

Two types of crankcase ventilation systems will be found on Plymouth models. A brief description follows to provide easy identification so that proper service procedures may be applied.

The **Standard Ventilation System** (Fig. 24) consists of a ventilation valve and cap mounted on the right hand rocker cover, a carburetor with drilled passages in the throttle body, a hose connecting valve cap to the throttle body passages and the oil filler pipe breather cap.

The **Closed Ventilation System** (Fig. 25) is basically the same as the Standard System except that it contains a **closed** oil filler pipe breather cap (Fig. 26) and a hose connecting the cap to the carburetor air cleaner housing. In addition, the air cleaner filter element is provided with a plastic mesh outer wrapper (Fig. 27).

**(The wrapper is not used on high performance engines equipped with non-silenced air cleaners.)**

### *Cleaner Air Package*

The crankcase ventilation system utilizing the Cleaner Air Package (Fig. 28) is basically the Closed Crankcase Ventilation System (Fig. 25) combined with a system of exhaust omission control through timing and carburetion. This is provided through the use of a modified carburetor, an altered distributor and a special vacuum control valve.

### *Servicing Procedures*

Periodic servicing of the crankcase ventilation system is required to maintain good engine performance and prevent malfunction of the system because of combustion products deposited in the valve, hose and carburetor passages.

### *Standard System*

Every six months clean and service the system as outlined. Replace the valve every year.

In cases of severe service, such as experienced in police, taxicab or other operation involving short trips with prolonged idling, it is recommended that the system be checked for operation with **every oil change** and serviced as required.

With engine idling, remove ventilator valve and cap assembly from right hand rocker cover (Fig. 24). If valve is working freely, a hissing noise will be heard as air passes through the valve, and a strong vacuum should be felt when a finger is placed over the valve inlet.

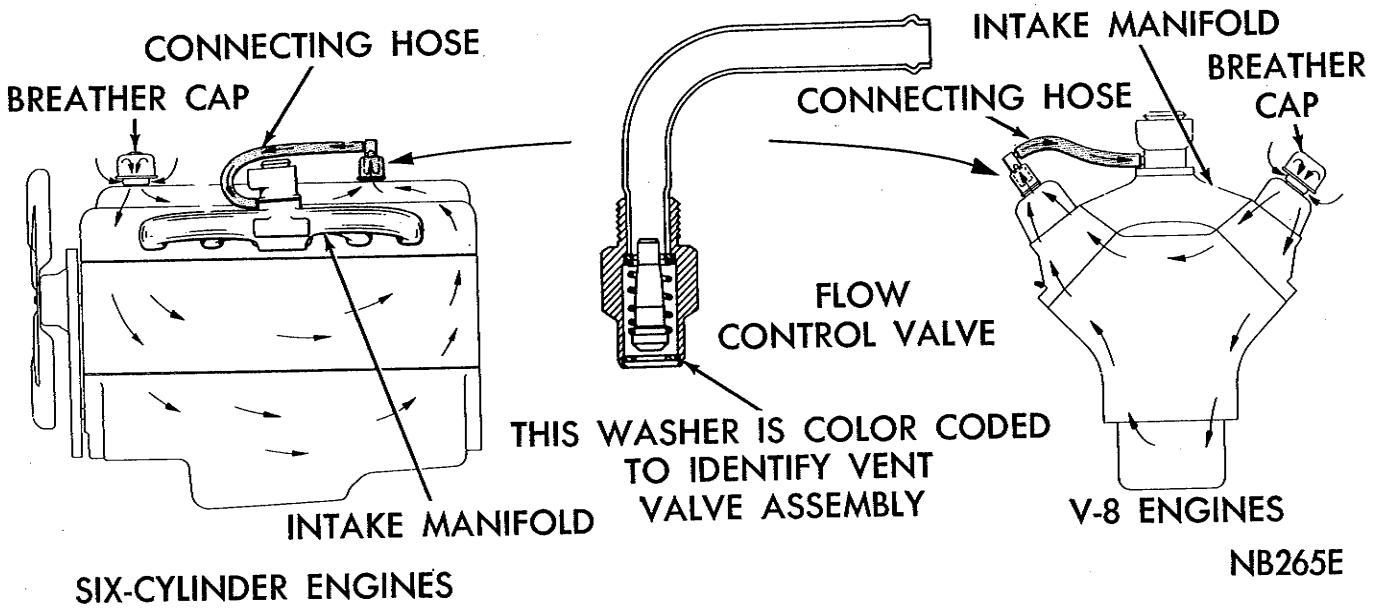


*Fig. 24—Standard Crankcase Ventilation System*

MyMopar.com

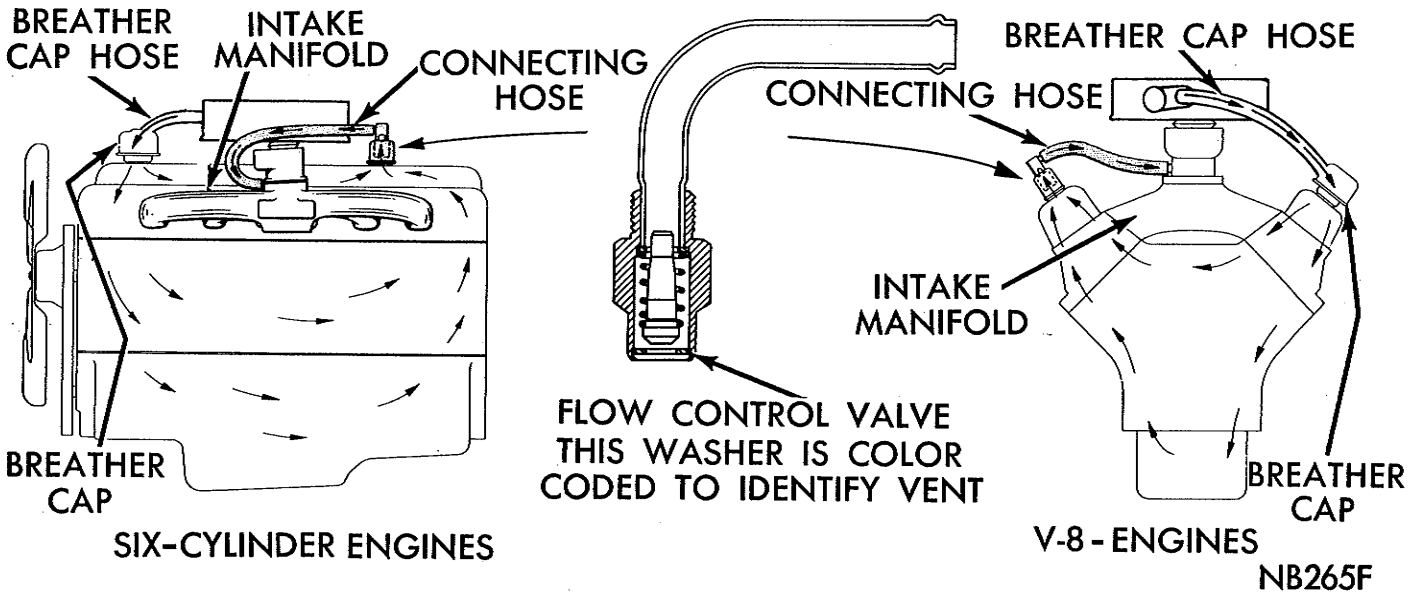


***Fig. 25—Closed Crankcase Ventilation System***

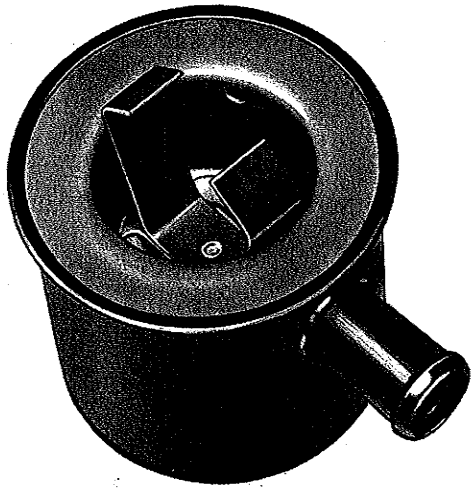


***Fig. 26—Closed Type Breather Cap***

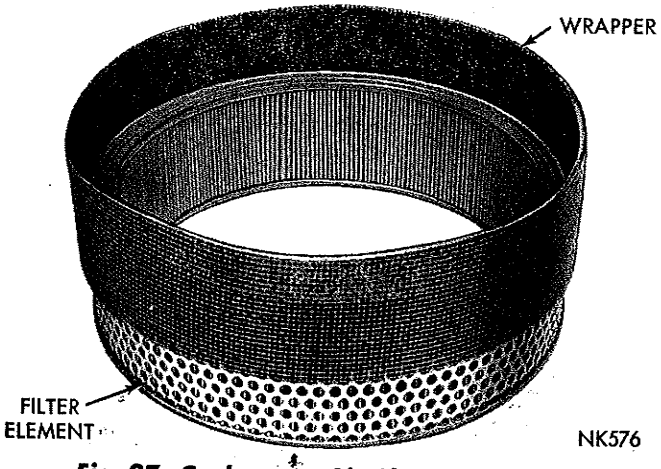


***Fig. 27—Carburetor Air Cleaner Element and Wrapper***

If valve is working properly, reinstall ventilator valve and cap assembly and remove the oil filler pipe breather cap. With engine idling, loosely hold a piece of stiff paper or a parts tag over oil filler pipe. After allowing about a minute for crankcase pressure to reduce, the paper should be drawn against the filler pipe with a noticeable force. If this occurs, a final check should be made to be certain valve shuttle is free.

Shut off engine, remove valve and shake it vigorously. A clicking noise should be heard if valve shuttle is free. If noise is heard, valve is satisfactory and no further service is necessary.

If valve does not click when shaken, or the paper is not drawn against filler pipe with a noticeable force, replace valve and recheck system.

**Do not attempt to clean the valve. Replace it with a new valve.**

On 170 cubic inch engines use Ventilator Valve identified by a white end washer. For all other engines use valves that have a black end washer.

Remove ventilator valve hose (Fig. 24) from cap and

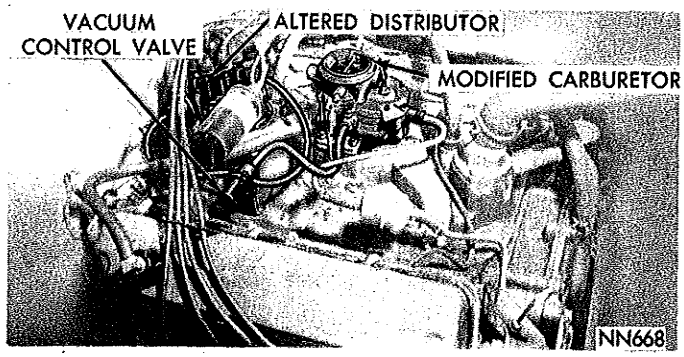


***Fig. 28—Cleaner Air Package (Typical)***

MyMopar.com

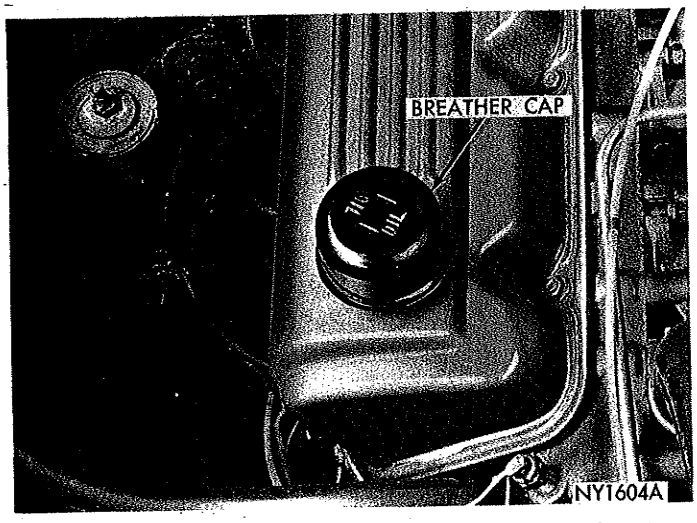


*Fig. 29—Oil Filler Breather Cap (6-Cyl. Engines)*

carburetor. Inspect it for deposits and clean, if necessary.

Remove breather cap (Fig. 29 or 30) and wash it thoroughly in kerosene or other suitable solvent to remove all old oil and dirt. Reoil filter element with SAE 30 engine oil.

Service air cleaner filter element every six months, as outlined on page 17, and replace filter element every two years. Use a Chrysler Corporation filter element or equivalent for replacement.

Remove carburetor. Hand turn a ¼ inch drill through the passages to dislodge solid particles.

**CAUTION: Under no circumstances should metal be removed. Use a smaller drill, if necessary. Blow passages clean. It is not necessary to disassemble the carburetor for this service.**

### Closed Ventilation System

Service system with the wrapper air cleaner every six months, as outlined for the standard system. Replace valve every year. Service air cleaner filter element every six months, as outlined on page 15, and replace filter element and wrapper every two years.

On vehicles equipped with the **non-silenced** air cleaner filter element, service system at **every oil change** as outlined for vehicles with wrapper filter element, page 15. Service filter element at **every oil change,** as outlined on page 15. Replace filter element and ventilation valve every year.

**If vehicle is used extensively for short trips with frequent idling, these services will be required more frequently.**

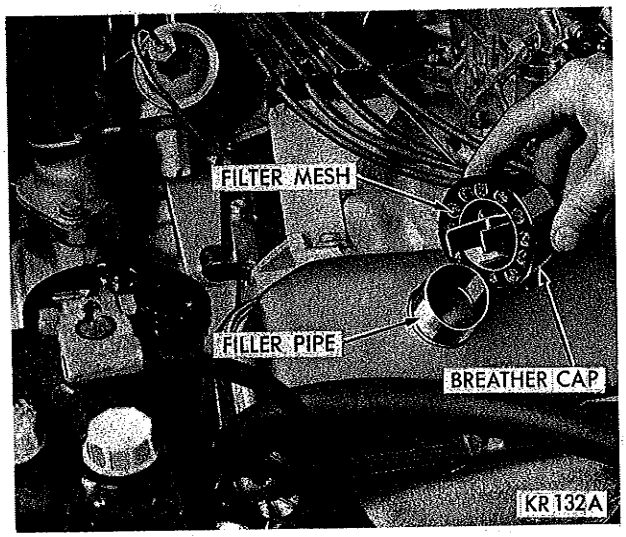


*Fig. 30—Oil Filler Breather Cap (V-8 Engines)*

### Cleaner Air Package

Service the crankcase ventilation system on vehicles equipped with this package as outlined on page 13.

The carburetor, distributor and vacuum control valve are serviced as outlined in Fuel System, Group 14 and Ignition System, Group 8.

### Taxi and Police Operation

For this type of service, the crankcase ventilation system should be serviced at each oil change. A suggested practice for taxi and police operations is to maintain spare valves, installing a clean valve at each oil change. Valves so removed can be cleaned by soaking overnight in carburetor cleaner, followed by drying with compressed air.

### Carburetor Air Cleaner - With Wrapper

Remove air cleaner from carburetor and remove filter element from cleaner. Remove gauze wrapper from element (Fig. 27). The wrapper helps prevent oil wetting of the element by collecting condensed oil vapors on its surface. Wash wrapper in kerosene or other suitable solvent to remove dirt and oil. Examine filter element. If it is dry or has only one or two oil-wetted spots, clean by gently blowing out dirt from element with compressed air (Fig. 37). Hold air nozzle about two inches from inner screen.

If element is saturated with oil for more than one-half of its circumference, replace it with a new element. Noticeable quantities of oil on filter indicate a malfunctioning of the ventilation system due to a sticking valve or excessive deposit build-up in ventilation system. Normally, filter element and wrapper should be replaced every two years. Use a Chrysler Corporation filter element, or equivalent, for replacement.

### Carburetor Air Cleaner - Without Wrapper

At each oil change period, examine and clean filter element as outlined above. If element is saturated with oil, replace it with a new one. In any event, replace the filter element once a year.

**If vehicle is used extensively for short trips with frequent idling, these services will be required more frequently.**

MyMopar.com

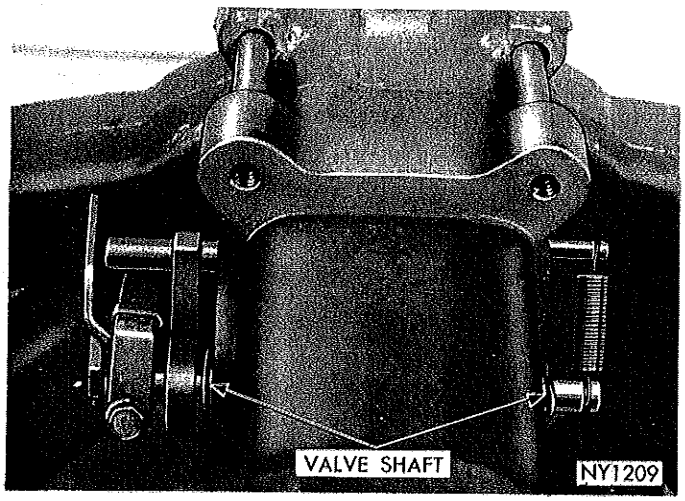


*Fig. 31—Manifold Heat Control Valve (6-Cyl. Engines)*

## ENGINE PERFORMANCE EVALUATION

Engine operating efficiency depends on correct ignition, carburetor adjustments, and on valve lash where applicable. To obtain best engine performance, Chrysler Corporation recommends that the engine be evaluated every 12 months or 12,000 miles, whichever occurs first and tuned, if necessary. Services performed during this evaluation should include the following:

**1—Spark Plugs**—Remove and inspect each spark plug. Most plugs can be cleaned, adjusted, and reinstalled. Rough idle, hard starting, frequent engine miss at high speeds, or apparent physical deterioration, are indications that the spark plugs should be replaced.

**2—Distributor**—Clean and inspect the distributor cap and rotor if required. Check breaker contacts for abnormal pitting, bluing, or misalignment, and adjust.

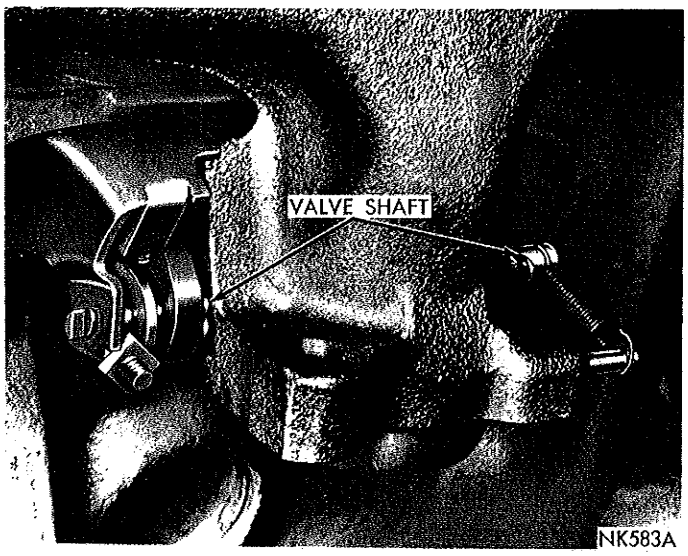


*Fig. 32—Manifold Heat Control Valve (273 Cu. In. Engine)*

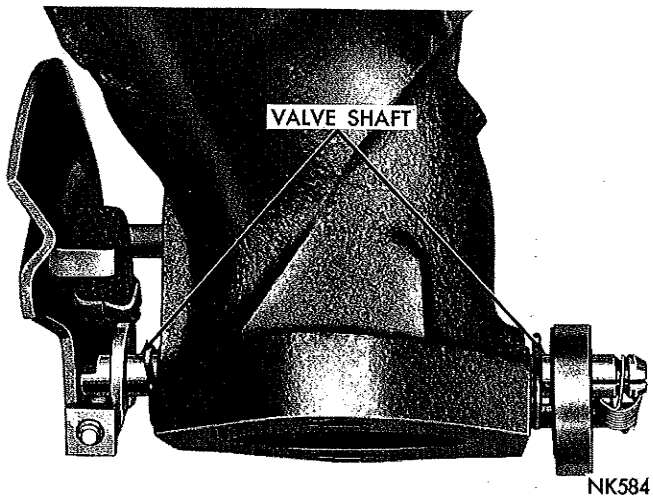


*Fig. 33—Manifold Heat Control Valve (318 Cu. In. Engine)*

Lubricate cam and wick, (see page 11). Be sure that all distributor secondary wires and tower caps are clean and connected properly. See "Electrical Group" for ignition timing procedures and settings.

**3—Carburetor**—Remove and clean air filter. Check operation of manifold heat control valve and choke diaphragms; use solvent recommended. Clean crankcase ventilation system, see page 13). See "Fuel System Group" for carburetor adjustment procedures.

**4—Battery**—Check specific gravity. Clean and tighten terminals; apply grease to post and terminals. Check circuit voltages as directed in the "Electrical Group."

**5—Starting Motor**—Test cranking ability as described in "Electrical Group."

**6—Valve Lash (where applicable)**—Should an engine continue to be noisy and the idle rough after a tune-up, adjust valve lash to specifications. Refer to the Engine Group for lash values and instructions.

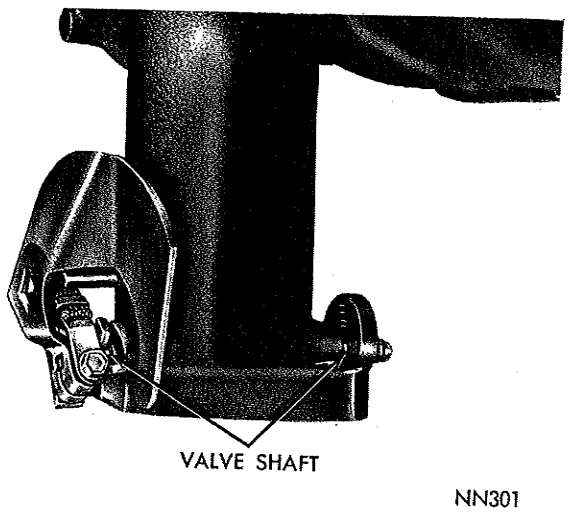


*Fig. 34—Manifold Heat Control Valve (361, 383, 426 Cu. In. Engines)*

MyMopar.com

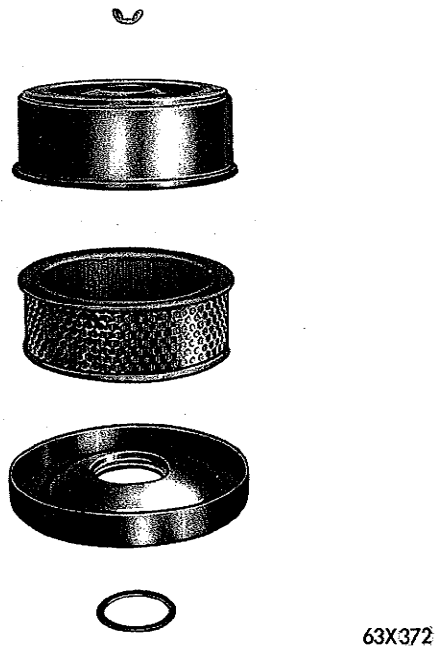


*Fig. 35—Carburetor Air Cleaner (6-Cylinder Engines)*

## MANIFOLD HEAT CONTROL VALVE

Freedom of movement of the heat control valve, by removing lead deposits from the valve shaft bearings, is assured by application of suitable solvent. Such a solvent is available under Part Number 1879318, Manifold Heat Control Solvent.

Every six months apply solvent to each end of valve shaft at bushings (Fig. 31, 32, 33 or 34). Apply solvent with manifold is **COOL.** Allow solvent to soak a few minutes, then work valve shaft back and forth until it works freely.

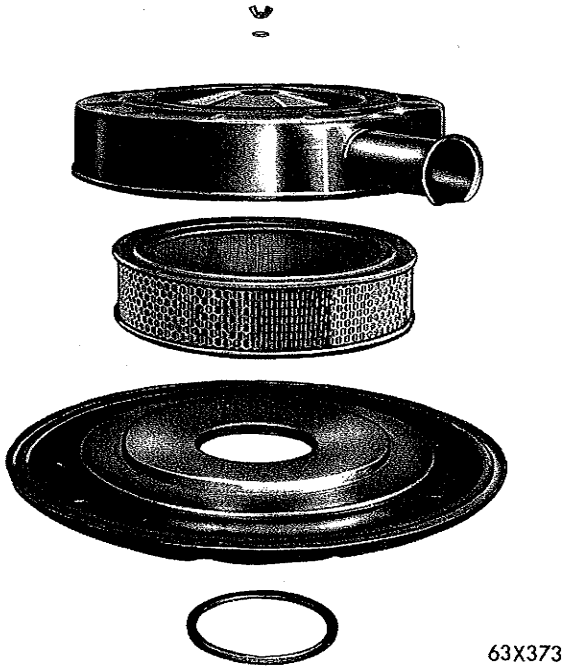


*Fig. 36—Carburetor Air Cleaner (V-8 Engines)*

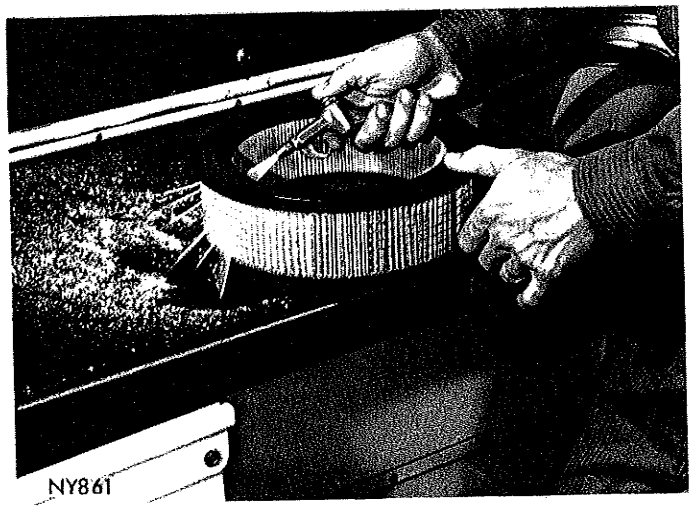


*Fig. 37—Cleaning Filter Element*

## CARBURETOR AIR CLEANER

### *Paper Element Type*

The paper filter element (Figs. 35 and 36) in the carburetor air cleaner should be cleaned every six months and replaced every two years. Use a Chrysler Corporation filter element or equivalent for replacement.

To clean, remove air cleaner from carburetor. Remove cover and filter element and clean the cover and housing. Using compressed air, gently clean element by holding air hoze nozzle at least two inches from the inside screen (Fig. 37).

**CAUTION: Do not use compressed air on outside surface of element as this will embed foreign matter in the element paper.**

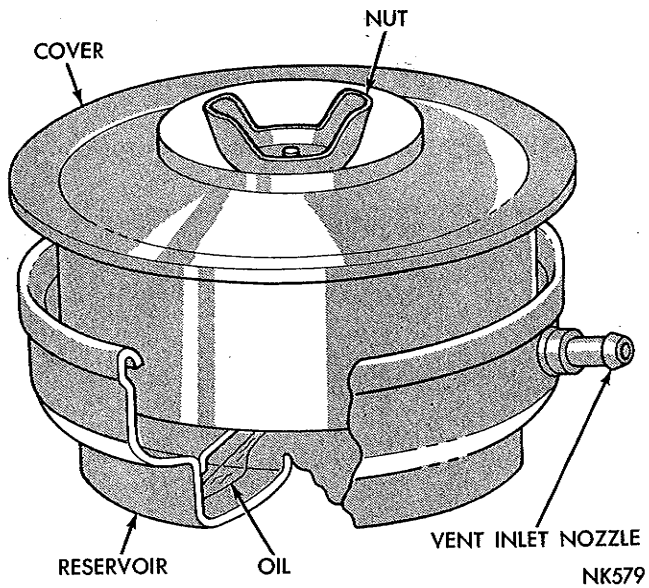


*Fig. 38—Carburetor Air Cleaner (Oil Bath Type)*

MyMopar.com

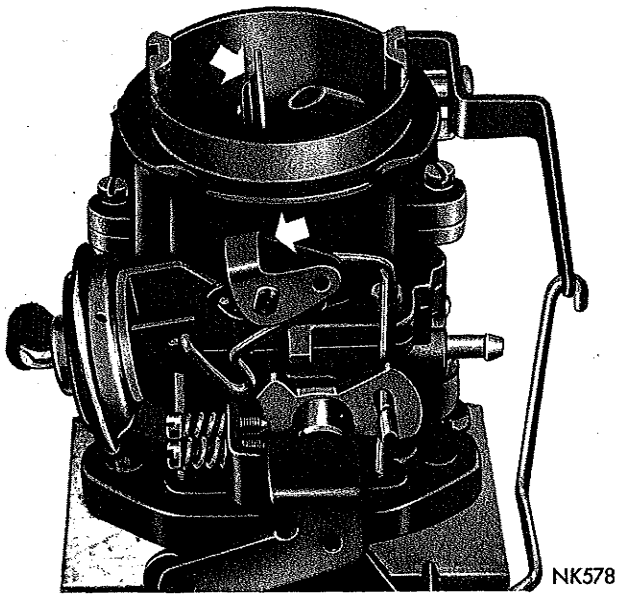


*Fig. 39—Apply Solvent to Choke Shaft Ends*

Examine element for punctures. Discard an element that has small pin-point punctures. Examine soft plastic sealing rings on both sides of element for smoothness and uniformity.

At this time also, service the Carburetor Choke Shaft, as outlined on this page.

### *Oil Bath Type (Extra Equipment)*

The sediment level in the air cleaner (Fig. 38) should be examined every second oil change, or more frequently under severe operating conditions, such as in dusty areas.

Service the cleaner if sediment is within ⅜ inch of shelf or at least once a year.

To clean, remove cover and filter element. Wash element thoroughly in kerosene and drain. Clean the reservoir thoroughly and fill to indicated level with one pint SAE 10W-30 engine oil. This grade is suitable for all temperatures.

Reassemble cleaner and install on carburetor.

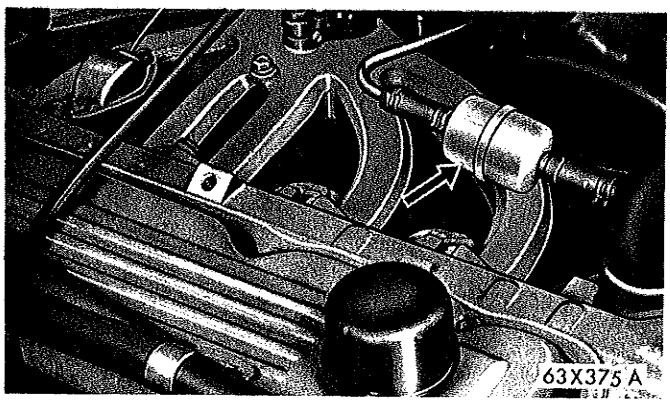


*Fig. 40—Fuel Filter (6-Cyl. Engines)*

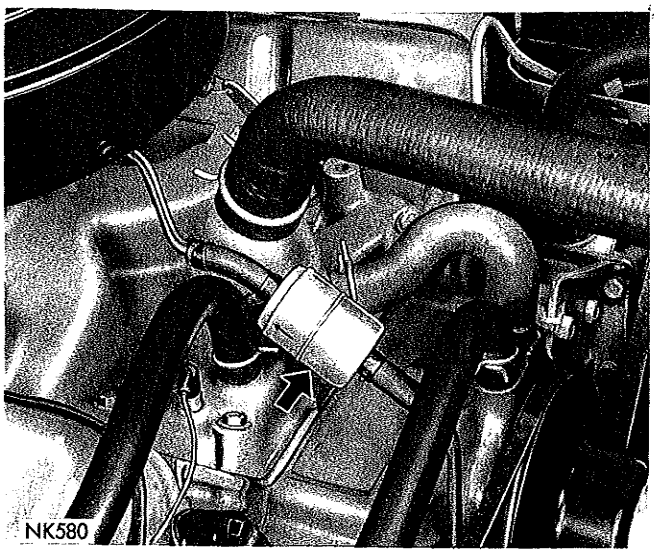


*Fig. 41—Fuel Filter (273 Cu. In. Engine)*

## CARBURETOR CHOKE SHAFT

Gum deposits on the choke shaft bearings may be removed by applying a gum solvent. Such a solvent is available under Part Number 1643273, Carburetor Cleaner. This will assure freedom of movement of the choke shaft.

Every six months, with the air cleaner removed, apply cleaner to ends of choke shaft where it rotates in the air horn (Fig. 39). At the same time, move choke shaft back and forth until deposits are flushed out.

Run engine at idle to clean out any excess cleaner from carburetor and intake manifold.

## FUEL FILTER

The fuel filter (Figs. 40, 41, and 42) is of the disposable type. Under average operating conditions, filter should be replaced every 2 years or 24,000 miles whichever occurs first. Should an excessive amount of foreign matter accumulate in fuel tank, filter may

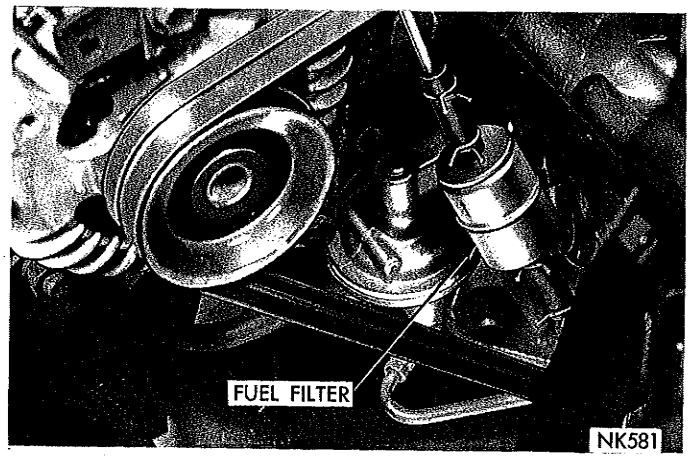


*Fig. 42—Fuel Filter (318, 361, 383, 426 Cu. In Engines)*

MyMopar.com

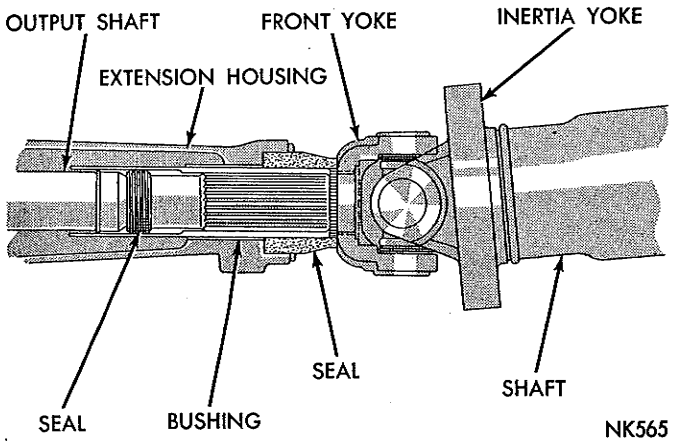


***Fig. 43—Front Universal Joint with Automatic Transmission (Belvedere and Fury Models)***

require replacing more frequently.

After installing new filter, run engine for several minutes and check for leaks at connections.

## PROPELLER SHAFT AND UNIVERSAL JOINTS

Under normal operating conditions, relubrication of the universal joints is not required. Every six months, however, the front and rear joints (Figs. 43 and 44) should be inspected for external leakage at the bearing seals. The joints should not be disassembled for relubrication unless external leakage or damage is observed.

When necessary to replace seals, completely disassemble propeller shaft and joints and clean and inspect all parts for serviceability. Replace damaged parts. Repack bearings (Figs. 43 and 44) with Universal Joint Grease, NLGI grade "O."

Relubrication of the front universal joint splined yoke (Fig. 43) is required only when the propeller shaft is removed and disassembled for servicing.

When relubricating slip yoke, first thoroughly clean splines of output shaft and yoke. Then, spread

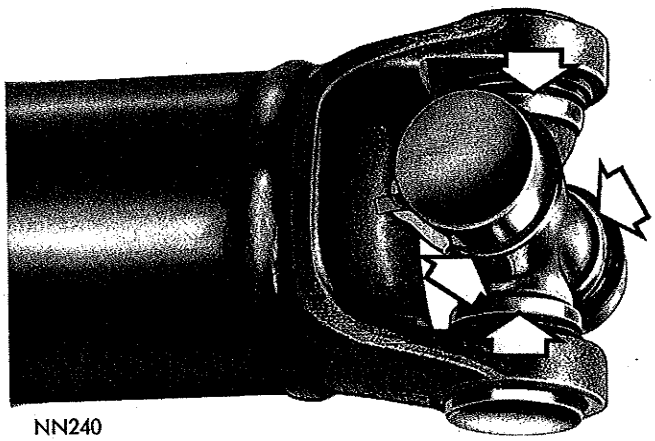


***Fig. 44—Rear Universal Joint (All Models)***

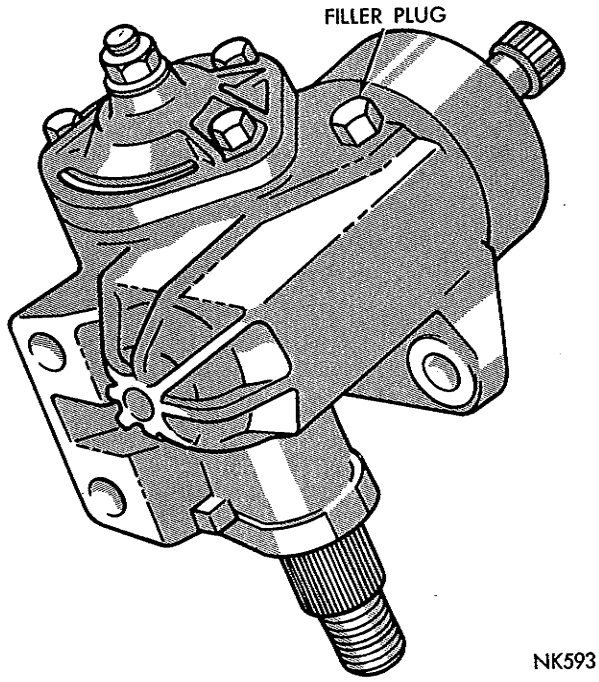


***Fig. 45—Manual Steering Gear Lubrication***

**not to exceed** 1/3 ounce of an Automotive Multi-Purpose Grease, NLGI, grade 2, containing extreme pressure additives and molybdenum disulfide, evenly over entire splined area of the yoke. Multi-Mileage Lubricant, Part Number 2525035, is satisfactory for this application.

Carefully examine rubber seal before reinstalling it in housing extension. If not serviceable, replace with a new one.

## STEERING GEAR

### *Manual*

The lubricant installed in the steering gear at the time of assembly is a high quality product and regularly scheduled changes are not required.

The fluid level, however, should be checked every six months, by removing filler plug (Fig. 45) to determine that lubricant completely covers worm gear.

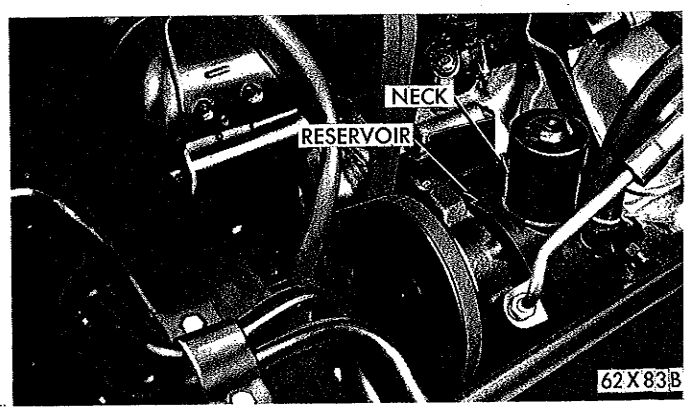


***Fig. 46—Power Steering Pump Reservoir***

MyMopar.com

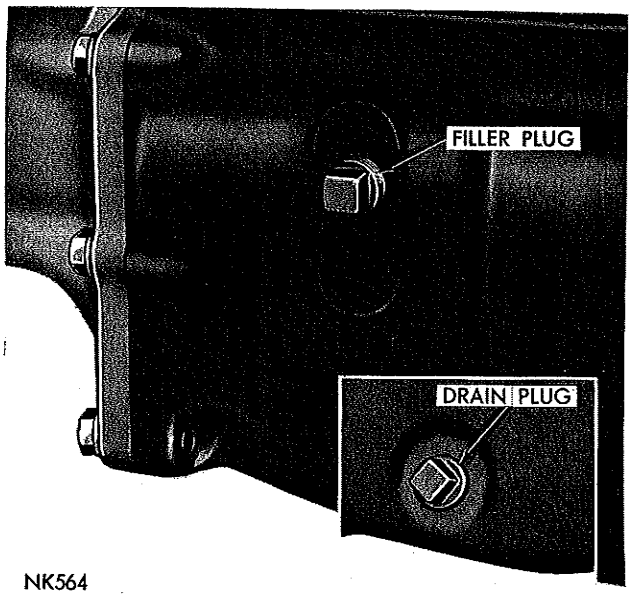


*Fig. 47—Transmission Filler and Drain Plug*

If additional lubricant is required to restore level, add sufficient quantity of Multi-Purpose Gear Oil SAE 90, as defined by MIL-L-2105B. This is suitable for all temperatures.

**CAUTION: When filling, do not use a pressure gun as high pressure may damage the seals.**

### Power Steering

Check fluid level in power steering reservoir every six months. When fluid is **cold,** level should be at base of filler neck (Fig. 46). When fluid is **hot,** the level should be halfway up filler neck.

**CAUTION: Before removing filler neck cap, wipe it carefully to prevent assumulated dirt from dropping into reservoir.**

To restore level, if necessary, add sufficient hydraulic fluid specially formulated for minimun effect on rubber hoses. Such a fluid is available under Part Number 2084329, Power Steering Fluid.

## TRANSMISSION

### Manual Three-Speed Standard

The lubricant installed in the trnsmission at the time of assembly is a high quality product and regularly scheduled changes are not required for vehicles whose operation is classified as normal service for passenger cars.

The fluid level, however, should be checked every six months and determined that it is at the bottom of filler plug hole (Fig. 47). When necessary to replenish, refill as required, using only Automatic Transmission Fluid, AQ-ATF, Suffix "A" for all temperature ranges. Included in this group is Automatic Transmission Fluid AQ-ATF-2351A, available under Part Number 1843314. In warm weather, Multi-purpose Lubricant SAE 90, as defined by MIL-L-2105B may be used.

When vehicle is used for other than normal service, or for towing trailers, refer to "Trailer Towing Service," page 21, for recommended servicing.

### Manual Four-Speed

The transmission is filled at the factory with a special gear lubricant and regularly scheduled changes are not required for vehicles whose operation is classified as normal service for passenger cars.

The fluid level, however, should be checked every six months and determined that it is at the bottom of the filler plug hole (Fig. 47). If necessary to replenish, use Multi-Purpose Gear Lubricant SAE 140, as defined by MIL-L-2105B.

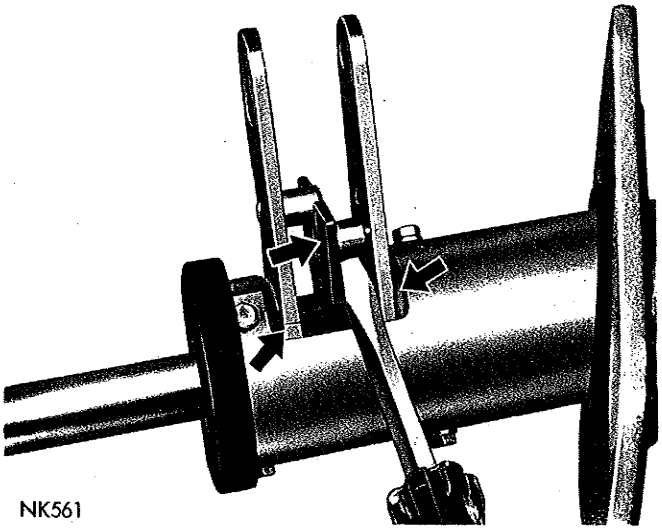


*Fig. 48—Column-mounted Manual Transmission Gearshift Control Lubrication Points*

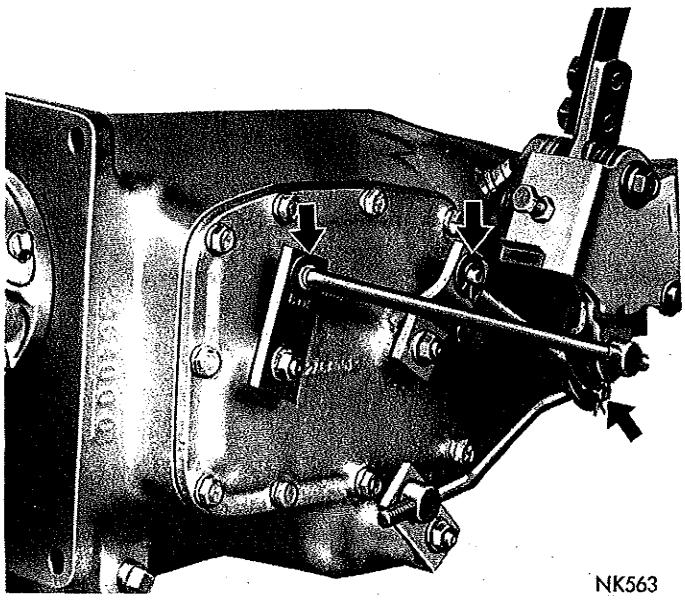


*Fig. 49—Floor-Mounted Manual Transmission Gearshift Mechanism Lubrication Points*

MyMopar.com

During cold weather, if shift effort becomes extremely high, transmission should be drained (Fig. 47) and refilled with Multi-Purpose Gear Lubricant SAE 80 or SAE 90, as defined by MIL-L-2105B or with Automatic Transmission Fluid, AQ-ATF, Suffix "A." Automatic Transmission Fluid should be replaced with Multi-Purpose Gear Lubricant SAE 140 in warm weather.

When the vehicle is used for other than normal service, or for towing trailers, refer to "Trailer Towing Service," see below, for recommended servicing.

### *Trailer Towing Service*

For vehicles equipped with trailer towing service, or if the regular operation of the vehicle is classified as severe, the transmission lubricant should be changed periodically. Drain and refill with specified lubricant initially after 36,000 miles or 3 years, whichever occurs first and every 12,000 miles or 12 months, whichever occurs first, thereafter.

### *Column-Mounted Manual Transmission Gearshift Controls*

If operation of the gearshift controls becomes noisy or the shift effort becomes objectionable, lubricate linkage at lower end of steering column (Fig. 48).

Apply a film of Multi-Mileage Lubricant, Part Number 2525035, or Automotive Multi-Purpose Grease, NLGI grade 2, to contact surfaces (Fig. 48).

### *Floor-Mounted Manual Transmission Gearshift Mechanism*

If operation of the mechanism becomes difficult, remove rubber boot on floor panel and apply a few drops of light engine oil to the mechanism.

In addition, from under the vehicle, apply light engine oil to rod ends in operating levers (Fig. 49).

## TRANSMISSION

### *Automatic*

The fluid level should be checked every six months.

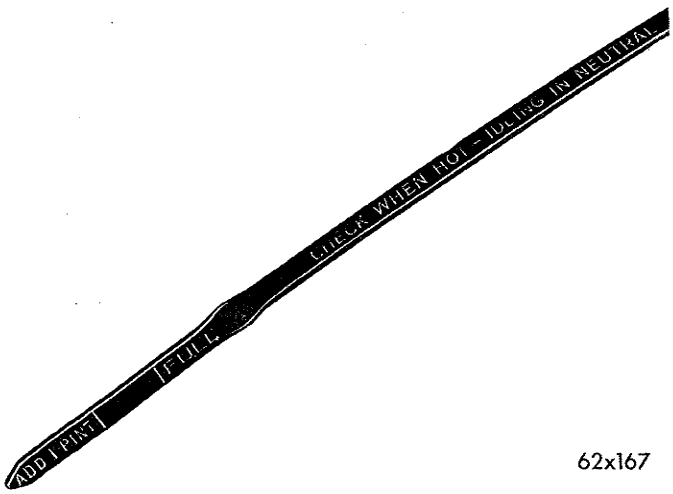


***Fig. 50—Transmission Dip Stick Markings***

This check should be made when engine temperature gauge indicates a normal warmed-up condition and transmission fluid is heated to its normal operating temperature. While level may be determined when fluid is "cold," the preferred method is with the fluid "hot." Check level with parking brake applied firmly and the engine idling.

**CAUTION: Before removing the level indicator, wipe off the cap and the top of the filler tube to prevent accumulated dirt from dropping into the transmission filler tube.**

After engine has idled for about two minutes, move gearshift lever slowly through all gear positions, pausing momentarily in each and ending with lever in "N" position.

When fluid is "hot," level should be at the "FULL" mark, or slightly below, but **never above** the "FULL" mark (Fig. 50) to avoid foaming of the fluid. Fluid should be added or extracted, depending upon the reading, to restore level as prescribed.

If it is necessary to check level when transmission is "cold," fluid level should be at, or slightly below the "ADD ONE PINT" mark. If the level is below this mark, add one pint of fluid and recheck level.

Restore level, when necessary, using only Auto matic Transmission Fluid AQ-ATF, Suffix "A." Included in this group is Automatic Transmission Fluid AQ-ATF-2351A, available under Part Number 1843314. No other fluids are recommended except fluids from this group. Exception to this is a sealer which introduces a small amount of swelling to reduce fluid leakage resulting from hardening or shrinkage of the seals in high mileage vehicles. Such a product is available under Part Number 2298923, Transmission Sealer.

For vehicles operated under normal service conditions, the transmission fluid and filter will provide satisfactory lubrication and protection to the transmission. Therefore, periodic fluid changes are not required, except for hard usage and trailer towing service as explained as follows.

### *Trailer Towing Service and Hard Usage*

For vehicles equipped for trailer towing service, or if the regular operation of the vehicle is classified as severe, the transmission fluid and filter should be changed periodically. Drain and refill the transmission with the specified fluid and replace the filter initially after 36,000 miles or 3 years, whichever occurs first and every 12,000 miles or every 12 months, whichever occure first, thereafter.

For transmission fluid draining and refilling service and filter replacement, see "TorqueFlite Transmission," Group 21.

## FRONT WHEEL BEARINGS

The brake linings and front wheel bearings on cars equipped with either drum or disc brakes should be

MyMopar.com

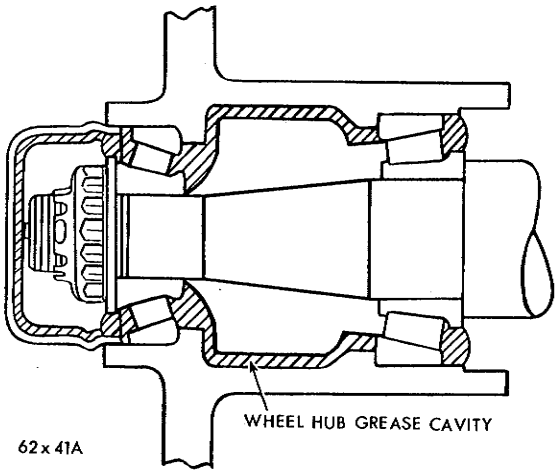


*Fig. 51—Front Wheel Bearing Lubrication*

inspected every 18 months or 18,000 miles whichever occurs first. The bearings should be cleaned and repacked whenever brake linings are replaced or brake drums resurfaced.

When an inspection of wheel bearings indicates lubricant is low in quantity, or contaminated with dirt or water to produce a milky appearance, bearings should be cleaned, inspected and relubricated if serviceable.

**CAUTION: To avoid possible contamination of lubricant by mixing lubricants that are not compatible, do not add lubricant to the bearings.**

Thoroughly clean old lubricant from bearings and hubs. Repack bearings and hubs with Automotive Multi-Purpose Grease, NLGI grade 2. When repacking hubs, (Fig. 51) make sure all surfaces of hub and outer grease cup interiors are covered with lubricant to minimize condensation and lubricant travel out of bearing. **DO NOT OVER FILL.**

Adjust bearings as follows:

(1) Install wheel and drum assemblies and tighten wheel nuts on Valiant models to 55 foot-pounds. On Belvedere and Fury models tighten nuts to 65 foot-pounds.

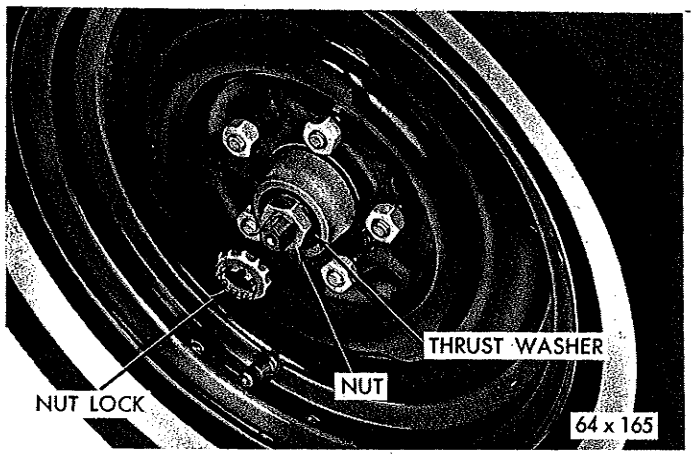


*Fig. 52—Front Wheel Bearing Adjustment*

(2) Tighten wheel bearing adjusting nut (Fig. 52) to 70 inch-pounds on Valiant models and 90 inch-pounds on Belvedere and Fury models, while rotating wheel.

(3) Position nut lock on adjusting nut so one pair of cotter pin slots align with hole in spindle.

(4) Back off adjusting nut and nut lock to the next slot and install cotter pin.

(5) Install wheel covers.

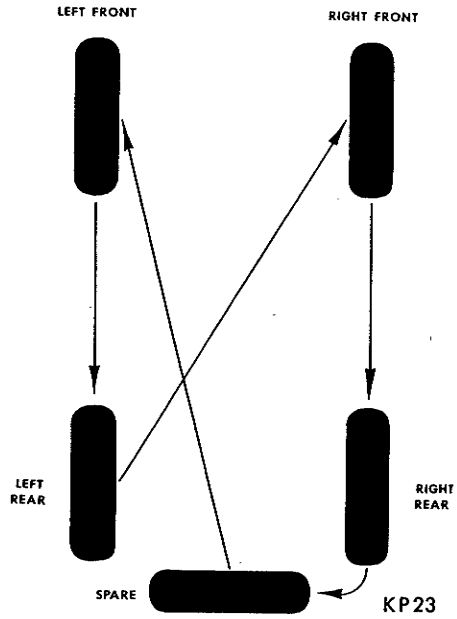


*Fig. 53—Tire Rotation Diagram*

## TIRES

Tires, including spare, should be rotated every second oil change according to tire rotation diagram (Fig. 53), to provide uniform wear, long tire life, and to retain confortable riding qualities.

Tires should be examined for unusual wear patterns, foreign material and proper inflation pressures. Unusual wear conditions may reflect a need for a change in driving habits or indicate that mechanical corrections may be necessary.

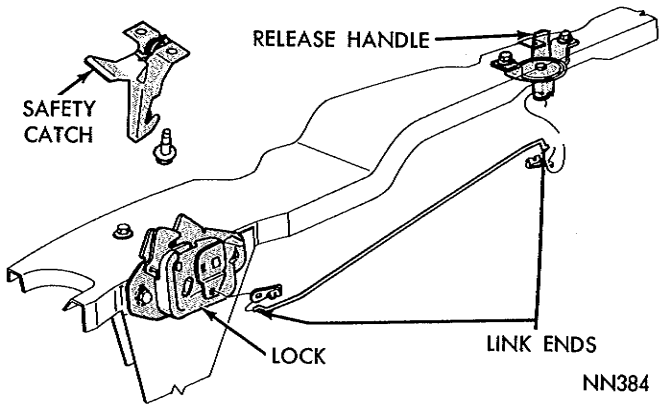


*Fig. 54—Hood Lock Assembly (Valiant Models)*

MyMopar.com

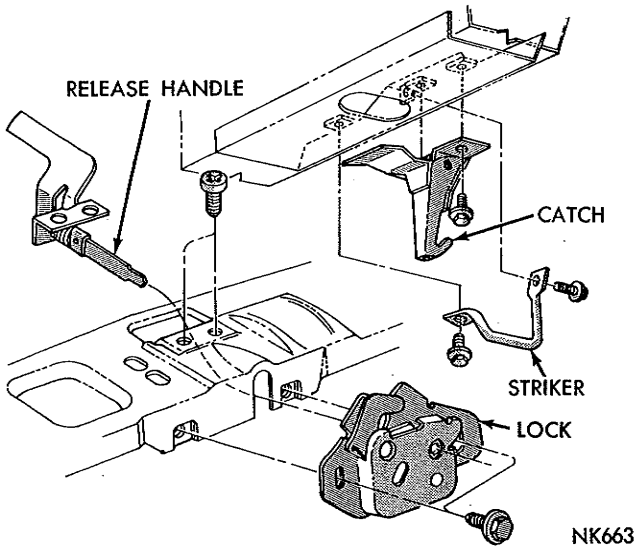


***Fig. 55—Hood Lock Assembly (Belvedere and Fury Models)***

Refer to Lubrication and Maintenance Charts (Figs. 1 and 2), for recommended inflation pressures.

## SPEEDOMETER CABLE

To service a noisy speedometer cable, disconnect housing at speedometer head. Remove shaft and clean it thoroughly. Apply a very thin film of speedometer cable lubricant on the shaft. Such a lubricant is available under Part Number 1243632, Speedometer Cable Lubricant. Wipe excess lubricant from the top one-foot of the shaft and from the ferrule.

**CAUTION: Excessive lubricant may cause malfunction of the speedometer.**

### *Hood Lock, Release Mechanism and Safety Catch*

Lubrication of the hood lock mechanism and safety catch is of vital importance to assure ease of operation and freedom from binding.

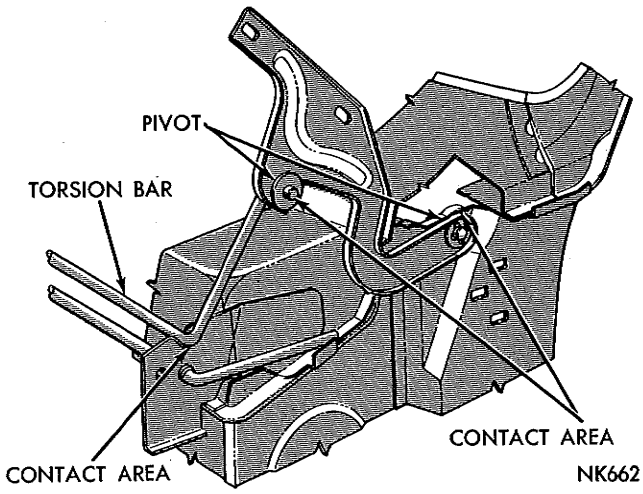


***Fig. 56—Hood Hinge Lubrication Points (Valiant Models)***

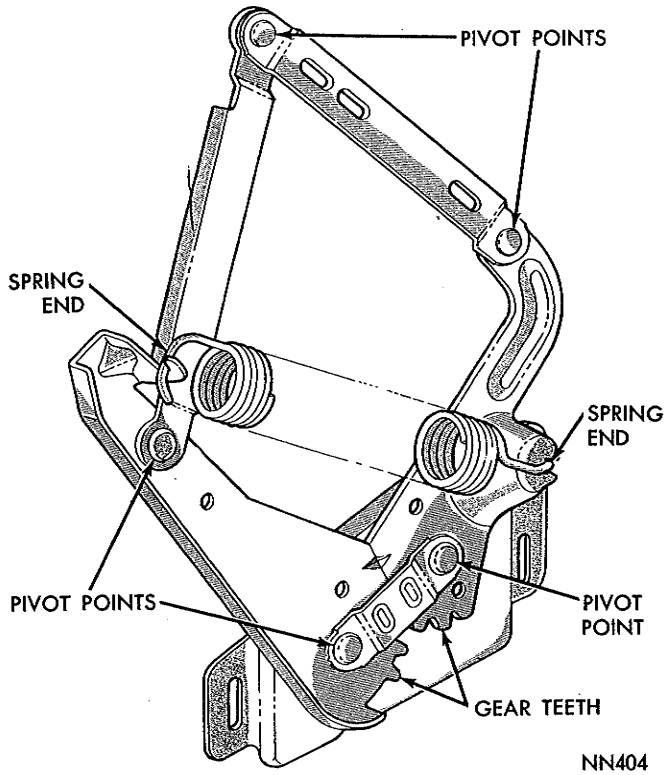


***Fig. 57—Hood Hinge Lubrication Points (Belvedere Models)***

Apply Automotive Multi-Purpose Lubricant, NLGI grade 2, sparingly, to all link ends and pivot and sliding contact areas (Figs. 54 and 55). Work the lubricant in the lock mechanism until all frictional surfaces are covered.

## BODY MAINTENANCE

Body and other operating mechanisms, including throttle linkage, should be inspected, and relubricated if necessary, every six months. This is necessary to

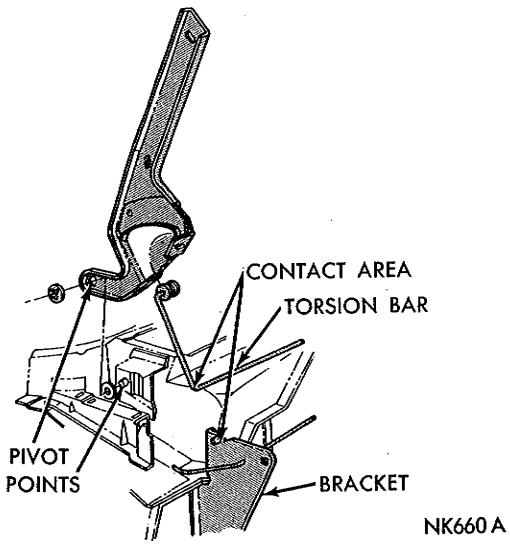


***Fig. 58—Hood Hinge Lubrication Points (Fury Models)***

MyMopar.com

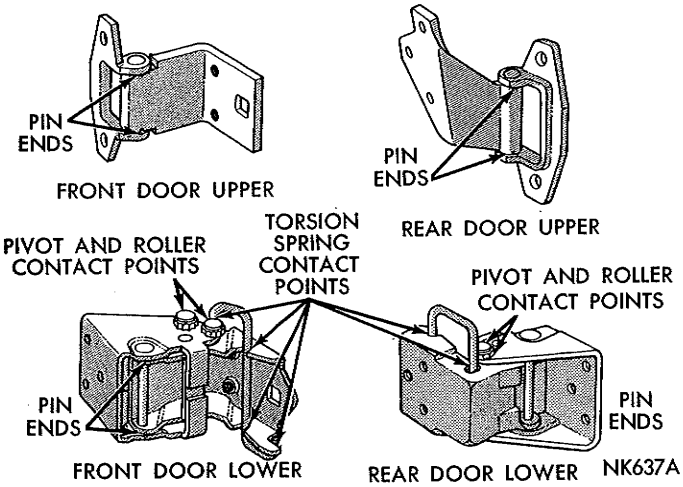


***Fig. 59—Door Hinge Lubrication Points (Valiant Models)***

maintain ease of operation and to provide protection against rust and wear.

Prior to applying any lubricant, wipe the parts clean to remove dust and grit. Excess oil or lubricant should also, be romoved.

Relubricate mechanisms as outlined in the following paragraphs.

**Where Lubriplate is specified, use a smooth, white body hardware lubricant conforming to NLGI, grade 1. A suitable lubricant is available under Part Number 1064768.**

**Where Door Ease is specified, use a stainless wax type lubricant. Such a lubricant is available under Part Number 1064769.**

### Lock Cylinders

When necessary, apply a thin film of Lubriplate directly to key. Insert key into lock and actuate several times. Wipe excess lubricant from key.

Particular attention should be given to external lock cylinders during fall and winter months to insure protection from water and ice.

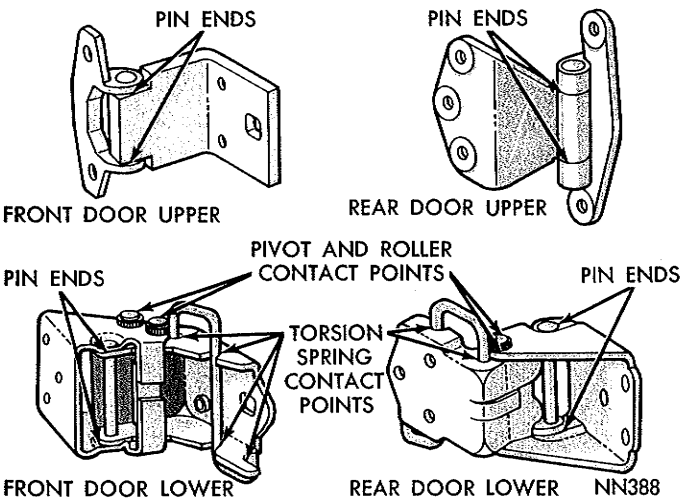


***Fig. 60—Door Hinge Lubrication Points (Belvedere Models)***

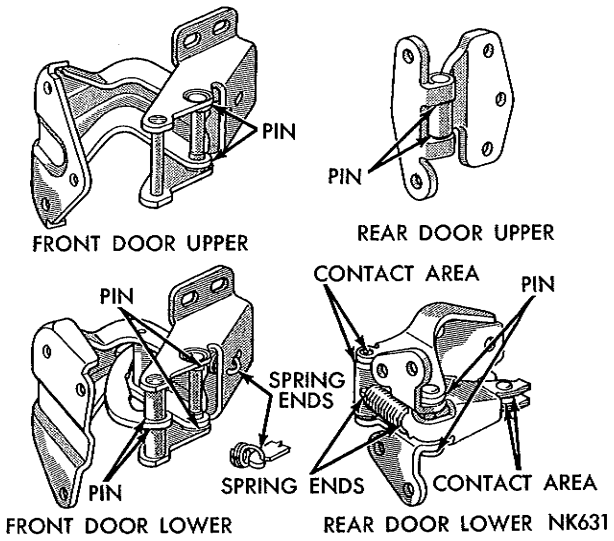


***Fig. 61—Door Hinge Lubrication Points (Fury Models)***

### Hood Hinges (Valiant Models)

Apply Lubriplate, sparingly, to all pivot points and torsion bar contact areas (Fig. 56). **Do not apply lubricant to torsion bar roller to cam surfaces.**

### Hood Hinges (Belvedere Models)

Apply Lubriplate, sparingly, to all pivot points, gear teeth and spring ends (Fig. 57).

### Hood Hinges (Fury Models)

Apply Lubriplate, sparingly, to all pivot points and torsion bar contact areas (Fig. 58). **Do not apply to torsion bar roller to cam surfaces.**

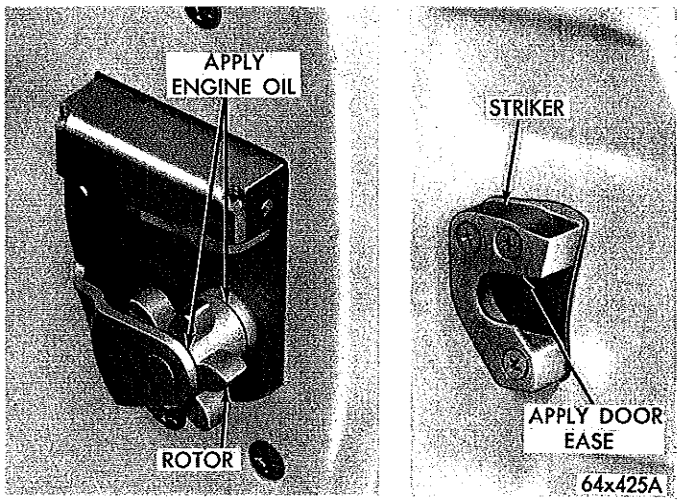


***Fig. 62—Door Striker Rotor and Striker Plate Lubrication Points All Models***

MyMopar.com

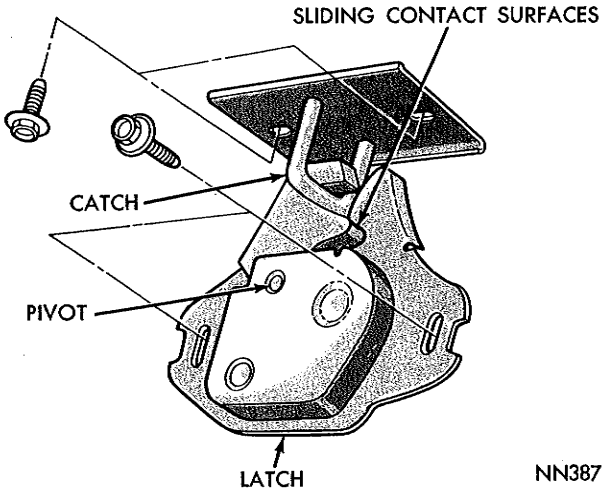


*Fig. 63—Deck Lid Latch Lubrication Points (All Valiant Models except Barracuda)*

### Door Hinges (Valiant Models)

On all hinges, apply engine oil to hinge pin ends (Fig. 59).

On lower hinges, in addition, apply engine oil to torsion spring contact points and all pivot contact points.

### Door Hinges (Belvedere Models)

On all hinges, apply engine oil to hinge pin ends (Fig. 60).

On lower hinges, in addition, apply engine oil to torsion spring contact points and all pivot contact points.

### Door Hinges (Fury Models)

On all hinges, apply engine oil to hinge pin ends (Fig. 61).

On lower hinges, in addition, apply engine oil to spring ends and contact areas.

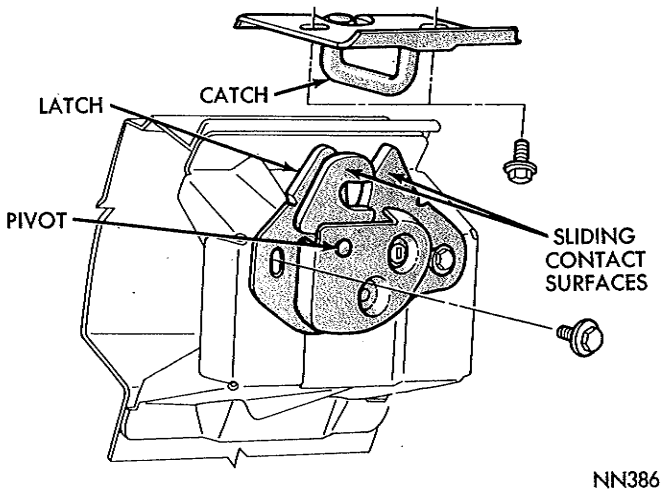


*Fig. 64—Deck Lid Latch Lubrication Points (Barracuda Model)*

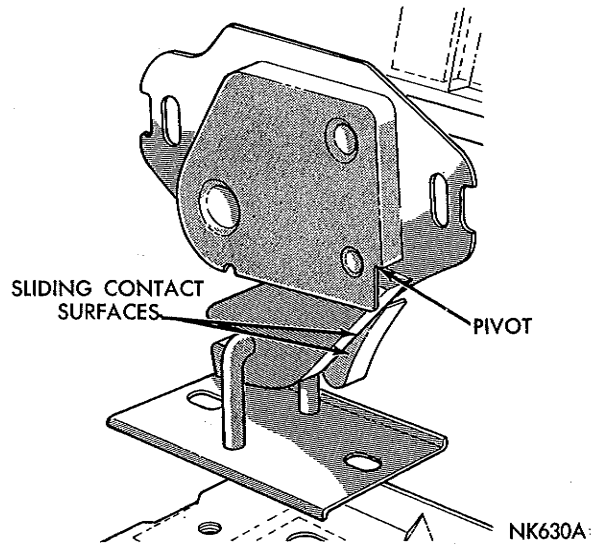


*Fig. 65—Deck Lid Latch Lubrication Points (Belvedere, Fury Models)*

### Door Latch Striker Rotor (All Models)

Apply light engine oil, sparingly, to outside and inside rotor bearing surfaces (Fig. 62). Wipe off excess oil.

### Door Latch Striker Plate (All Models)

Apply Door Ease Lubricant to striker teeth lock rotor contact surfaces (Fig. 62).

### Door Locks and Locking Control Linkage (All Models)

To inspect these parts and relubricate, if necessary, remove door or quarter trim panel. Apply a film of Lubriplate to all pivot and sliding contact areas.

### Door Remote Control Mechanism (Valiant)

To inspect this mechanism and relubricate, if necessary, remove door or quarter trim panel. Apply a film of Lubriplate to all pivot and sliding contact areas and to coils of spring.

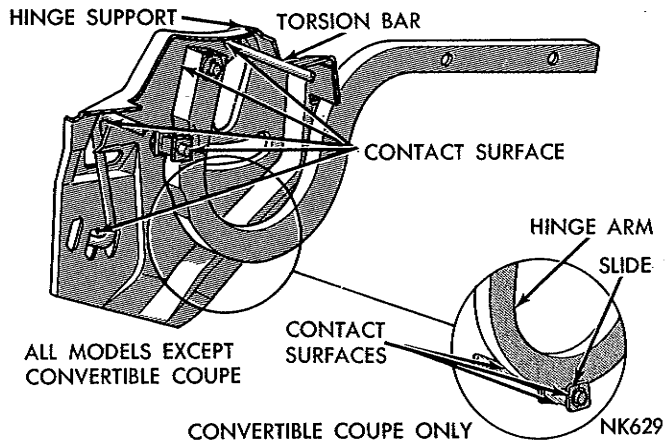


*Fig. 66—Deck Lid Hinge Lubrication Points (All Valiant Models except Barracuda)*

MyMopar.com

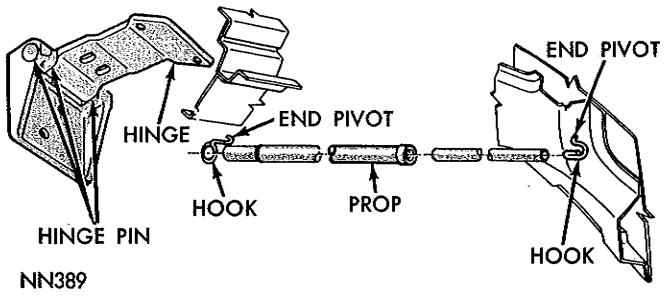


*Fig. 67—Deck Lid Hinge and Prop Lubrication Points (Barracuda Models)*

### Window Regulator, Glass Lower Frame (All Models)

To inspect these parts and relubricate, if necessary, remove door or quarter panel. Apply Lubriplate, sparingly, to regulator sector gear teeth, assist spring and pivots. Apply Lubriplate, sparingly, to glass lower frame roller slide tracks and roller and bracket assembly pivot points.

### Deck Lid Latch (All Models)

Apply Lubriplate, sparingly, to all pivot and sliding contact surfaces (Figs. 63, 64 and 65).

### Deck Lid Hinge (Valiant Models except Barracuda)

Apply Lubriplate, sparingly, to all pivot points and torsion bar contact areas (Fig. 66).

### Deck Lid Hinge Slide (Valiant Models and Fury Convertible)

Apply Lubriplate, sparingly, to slide to hinge arm contact surfaces.

### Deck Lid Hinges and Prop (Barracuda)

Apply engine oil, sparingly, to hinge pins (Fig. 67). Apply Lubriplate, sparingly, to prop end pivots.

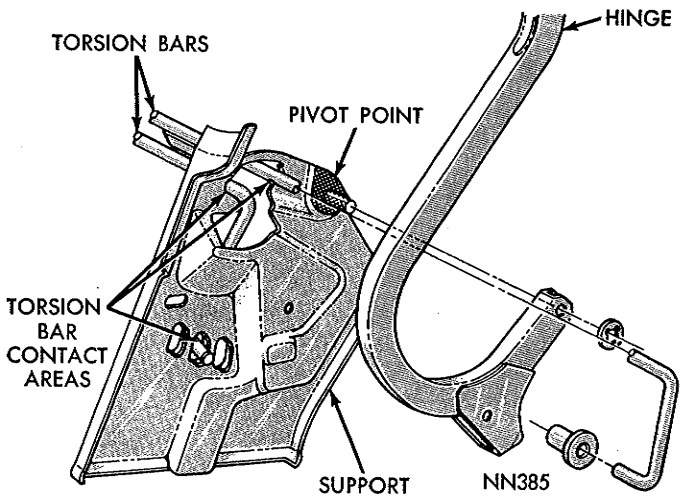


*Fig. 68—Deck Lid Hinge Lubrication Points (Belvedere Models)*

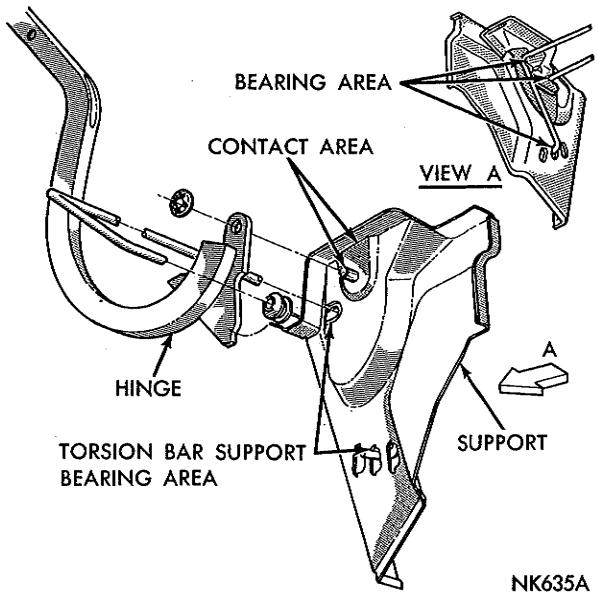


*Fig. 69—Deck Lid Hinge Lubrication Points (Fury - All Models except Convertible Coupe)*

### Deck Lid Hinge (Belvedere and Fury Models)

Apply Lubriplate, sparingly, to all pivot points and torsion bar contact areas (Figs. 68, 69 and 70).

### Tail Gate Hinges, Torsion Bar and Check Arm Guide Plate Lubrication (Valiant Models)

(1) Apply engine oil, sparingly, to hinge pivot areas and tail gate support arm, left side only (Fig. 71).

(2) Apply Door Ease Lubricant to tail gate lock striker plates, dovetail contact surfaces and sliding contact surfaces of tail gate torsion bar and support arm guide pillars.

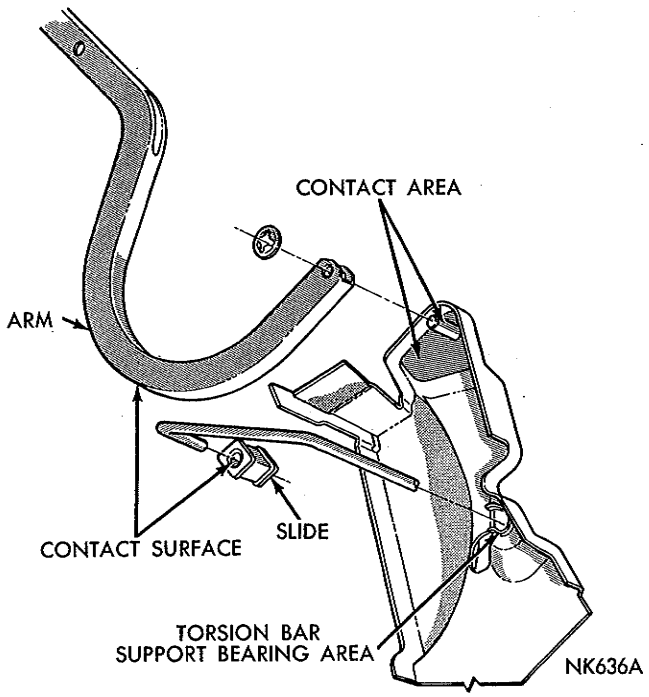


*Fig. 70—Deck Lid Hinge Lubrication Points (Fury Convertible Coupe Models)*

MyMopar.com

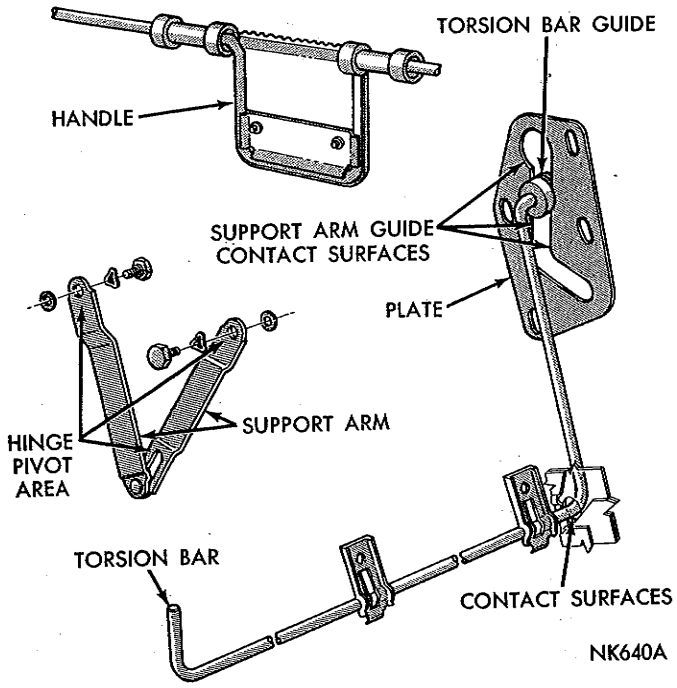


***Fig. 71—Tail Gate Torsion Bar and Check Arm Guide Lubrication Points (Valiant Models)***

(3) Apply Automotive Multi-Purpose Lubricant, NLGI grade 2, to contact surfaces between torsion bar and tail gate hinge or tail gate end face plate, right side only.

To inspect and lubricate tail gate lock and inside remote control handle linkage and window regulator, if necessary, remove tail gate trim panel. Apply Lubriplate, sparingly, to all pivot and sliding contact surfaces, including window regulator sector gear teeth and assist spring.

## Tail Gate Hinges, Torsion Bar and Check Arm Guide Plate Lubrication (Belvedere Models)

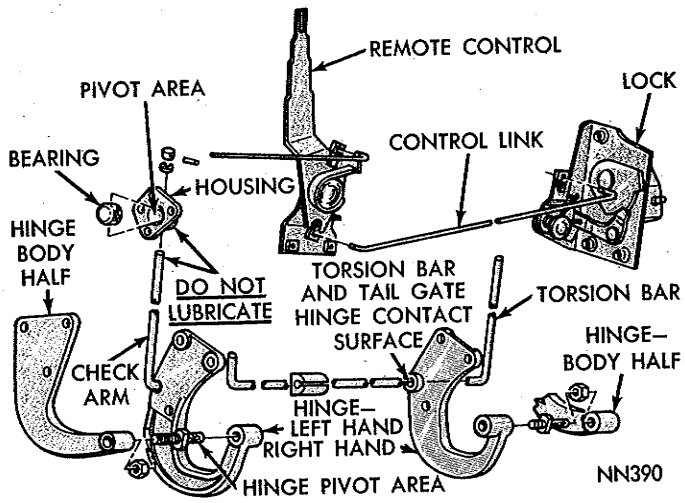


***Fig. 72—Tail Gate Torsion Bar and Check Arm Guide Plate Lubrication Points (Belvedere Models)***

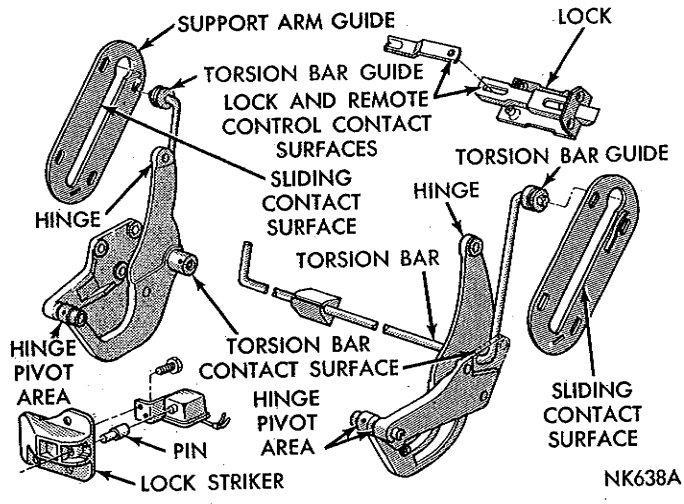


***Fig. 73—Tail Gate Torsion Bar and Check Arm Guide Plate Lubrication Points (Fury Models)***

(1) Apply engine oil, sparingly, to hinge pivot areas (Fig. 72).

(2) Apply Door Ease Lubricant to tail gate lock striker plates and dovetail contact surfaces.

(3) Apply Automotive Multi-Purpose Lubricant, NLGI grade 2, to contact surfaces between torsion bar and tail gate hinge or tail gate end face plate. Also, apply this same lubricant, sparingly, to pivot area between bearing and housing. **Do not apply to torsion bar to bearing or check arm to bearing sliding contact areas.**

To inspect and lubricate tail gate lock and inside remote control handle linkage and window regulator, if necessary, remove tail gate trim panel. Apply Lubriplate, sparingly, to all pivot and sliding contact surfaces, including window regulator sector gear teeth and assist spring.

## Tail Gate Hinges, Torsion Bar and Check Arm Guide Plate Lubrication (Fury Models)

(1) Apply engine oil, sparingly, to hinge pivot areas (Fig. 73).

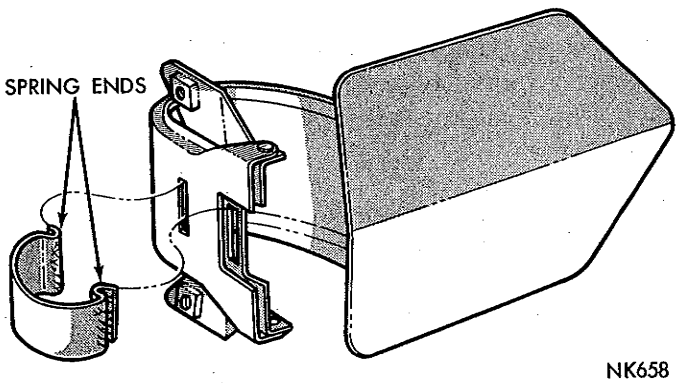


***Fig. 74—Fuel Tank Access Door Hinge Lubrication Points (Belvedere Models)***

MyMopar.com

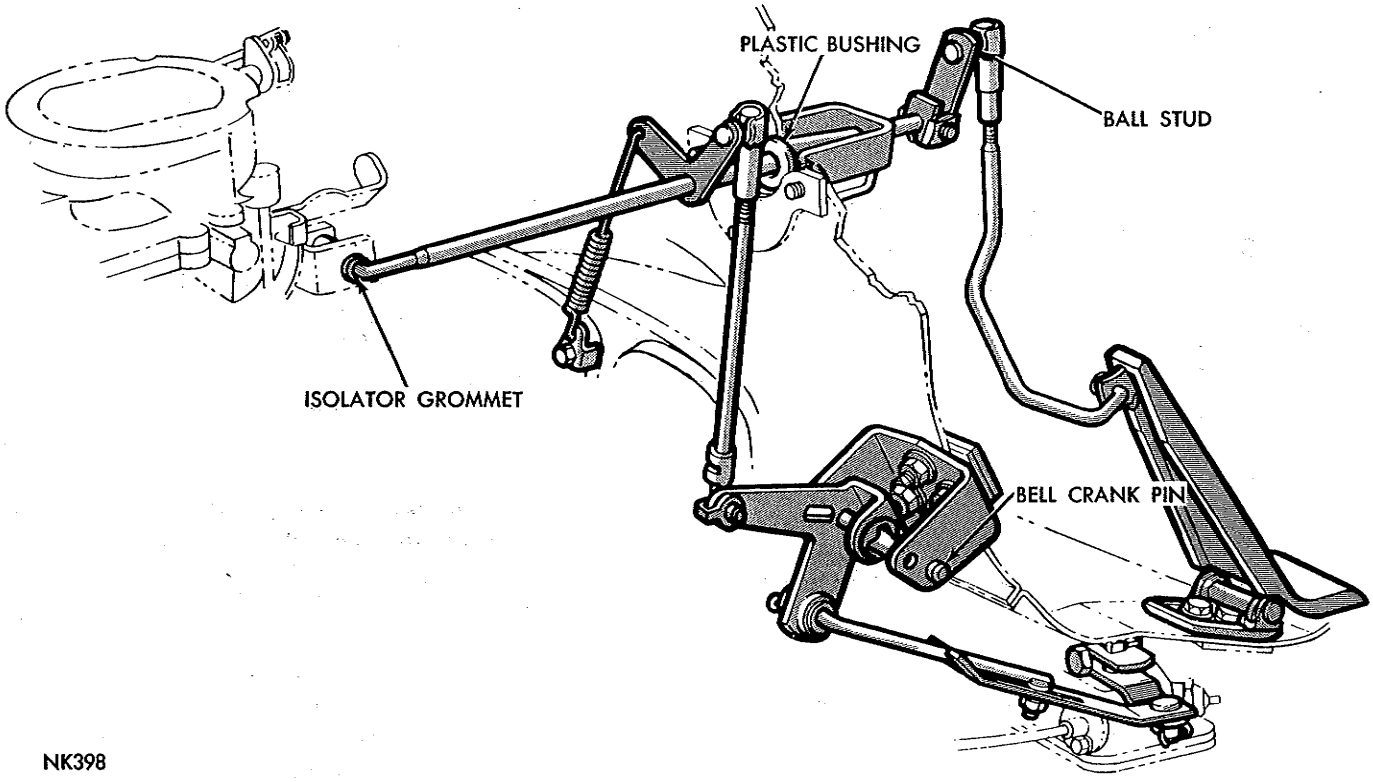


*Fig. 75—Throttle Linkage Lubrication Points (Valiant-6-Cyl. Engines)*

(2) Apply Door Ease Lubricant to tail gate lock striker plates and dovetail contact surfaces and tail gate torsion bar and support arm guide pillar sliding contact surfaces.

(3) Apply Automotive Multi-Purpose Lubricant, NLGI grade 2, to contact surfaces between torsion bar and tail gate hinge or tail gate end face plate, right side only.

To inspect and lubricate tail gate lock and inside remote control handle linkage and window regulator, if necessary, remove tail gate trim panel. Apply Lubri-plate, sparingly, to all pivot and sliding contact surfaces, including window regulator sector gear teeth and assist spring.

### Fuel Tank Access Door Hinge, Spring and Pin Lubrication Points (Belvedere Models)

Apply automotive Multi-Purpose Lubricant, NLGI grade 2, sparingly, to all pivot areas and spring end contact areas (Fig. 74).

### License Plate Bracket Hinge, Spring and Pin Lubrication Points (Fury Models)

Apply Automotive Multi-Purpose Lubricant, NLGI grade 2, sparingly, to all pivot areas.

### Throttle Linkage Lubrication (Valiant 6-Cyl. Engines)

Apply a thin film of Automotive Multi-Purpose Grease, NLGI grade 2 to the exterior surfaces of the insulator on the throttle shaft (Fig. 75), the ball joint located on the passenger side of the dash panel and between the plastic bushing and throttle rod and bearing areas on bellcrank pin.

### Throttle Linkage Lubrication (Valiant 8-Cyl. Engines)

On Models with Manual Transmission, apply a thin film of Automotive Multi-Purpose Grease, NLGI grade 2, to both ends of the accelerator shaft at the mounting bracket (Fig. 76) and on underside of the accelerator pedal where it contacts accelerator shaft lever.

On Models with Automatic Transmission, apply a thin film of Automotive Multi-Purpose Grease, NLGI grade 2, to both ends of accelerator shaft at the bracket (Fig. 76); at the underside of the accelerator pedal where it contacts accelerator shaft lever and pivot points at both upper and lower ends of transmission linkage.

### Throttle Linkage Lubrication (Belvedere and Fury Models with 225 Cu. In. Engine)

Apply a thin film of Automotive Multi-Purpose Grease, NLGI Grade 2, to both ends of the accelerator shaft where it turns in the bracket and where the nylon roller rolls on it (Fig. 77). Also, apply a thin film of the same lubricant to the engine mounted bellcrank pin.

MyMopar.com

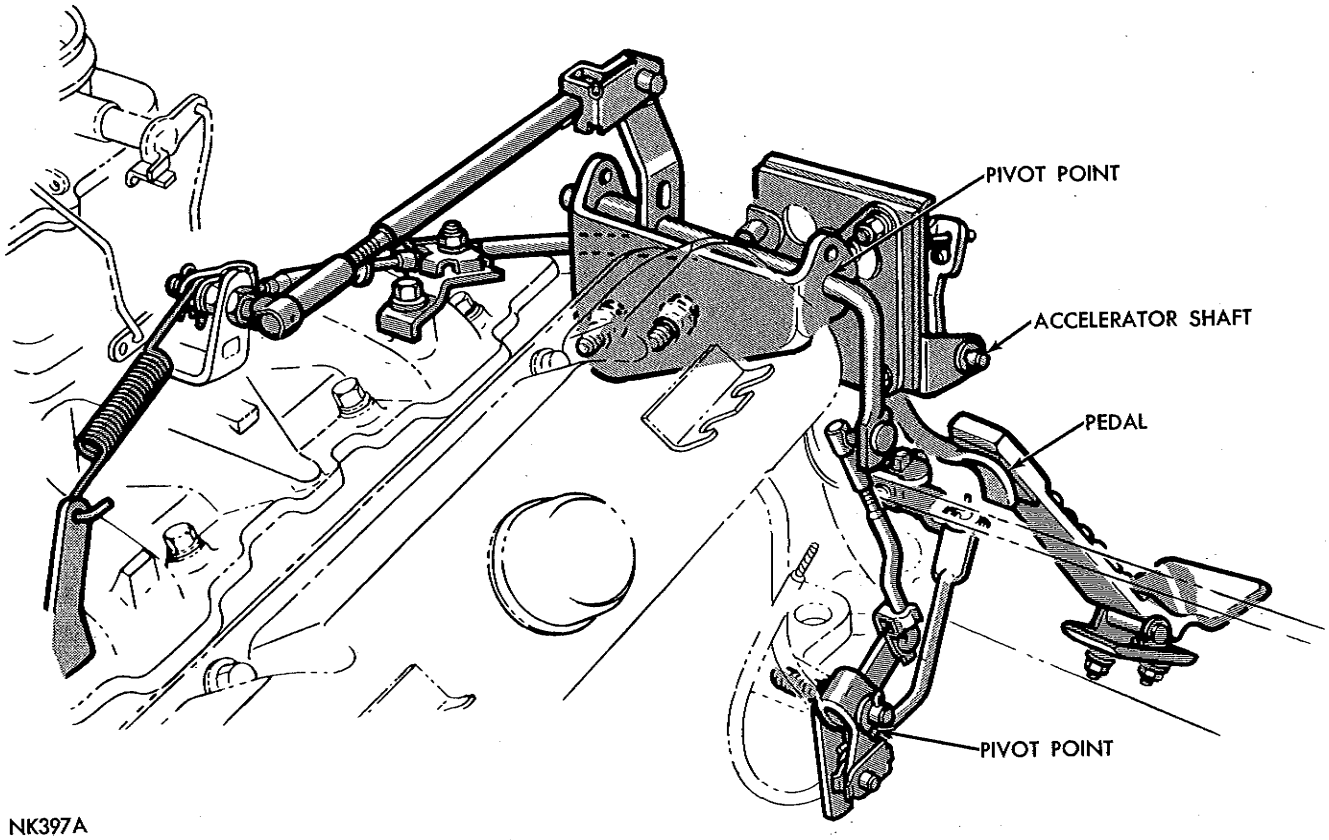


*Fig. 76—Throttle Linkage Lubrication Points (Valiant Models—V-8 Engine)*

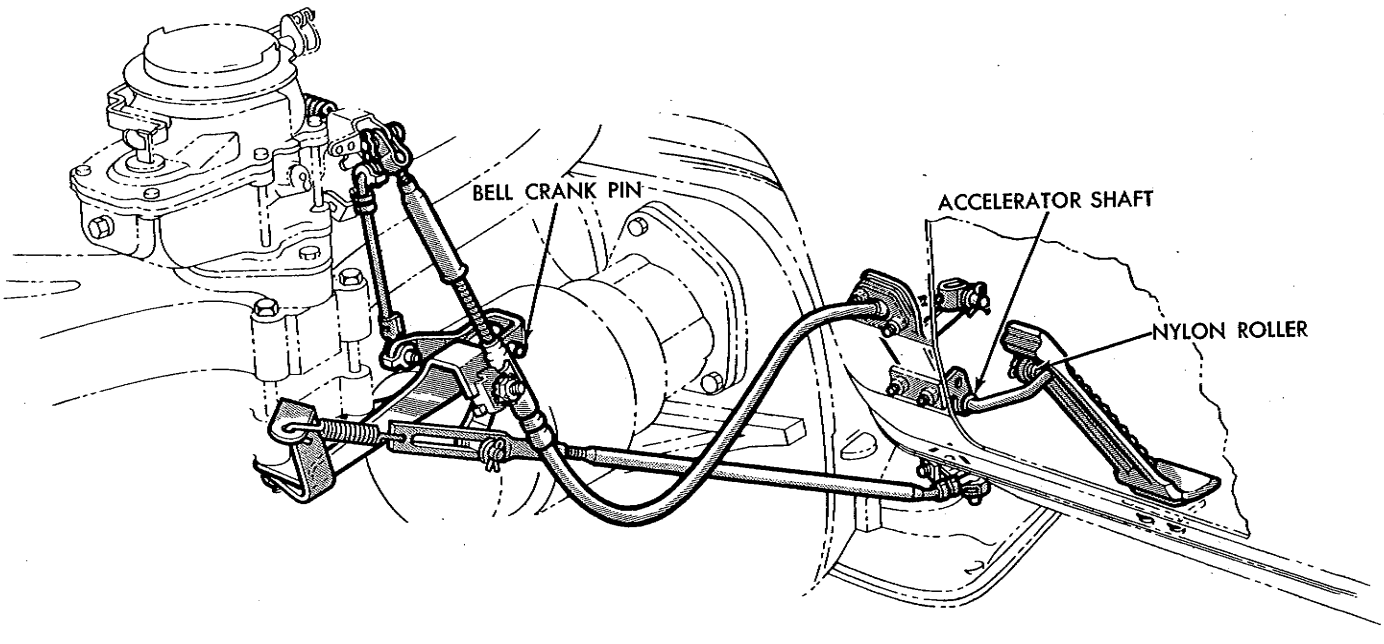


*Fig. 77—Throttle Linkage Lubrication Points (Belvedere and Fury Models with 225 Cu. In. Engine)*

MyMopar.com

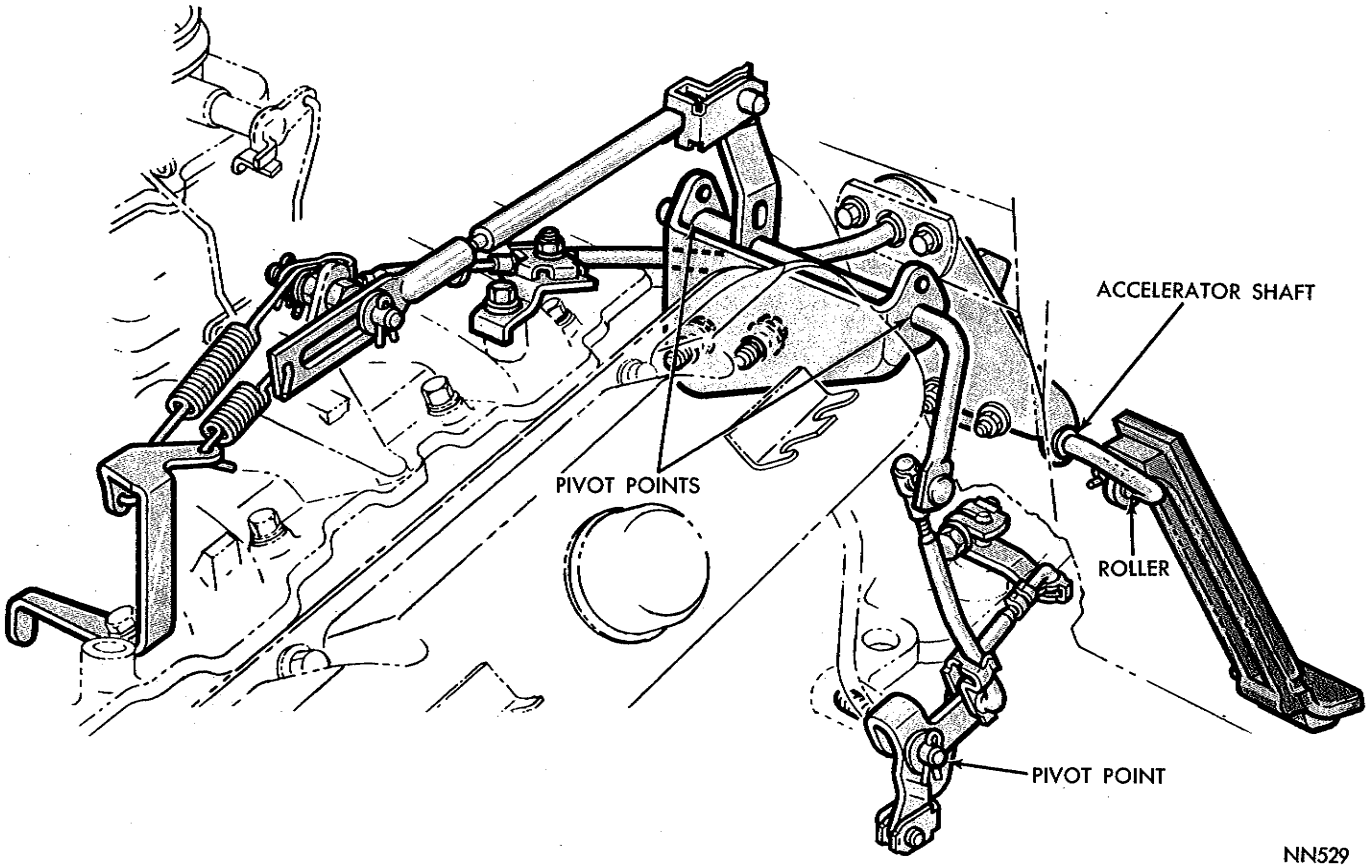


***Fig. 78—Throttle Linkage Lubrication Points (Belvedere Models-273 Cu. In Engine)***

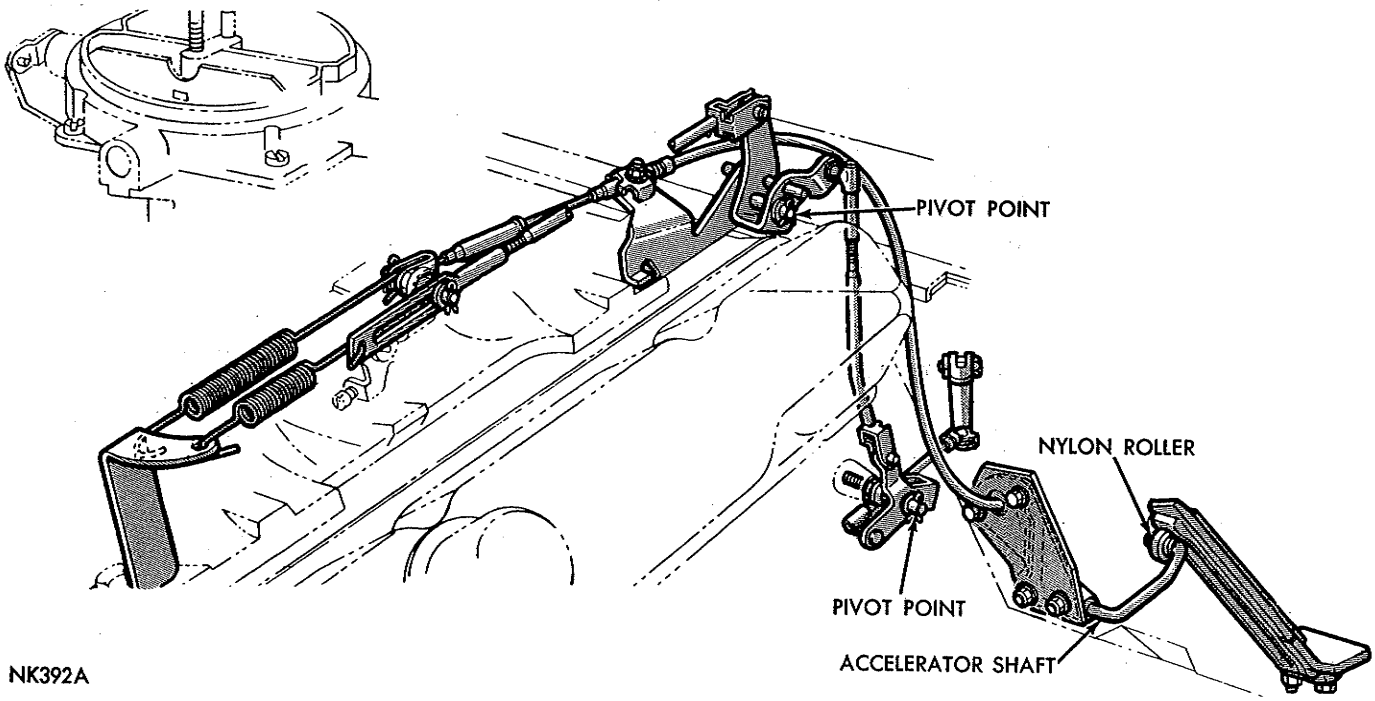


***Fig. 79—Throttle Linkage Lubrication Points (Belvedere and Fury Models-318, 361, 383, 426 Cu. In. Engines)***

MyMopar.com

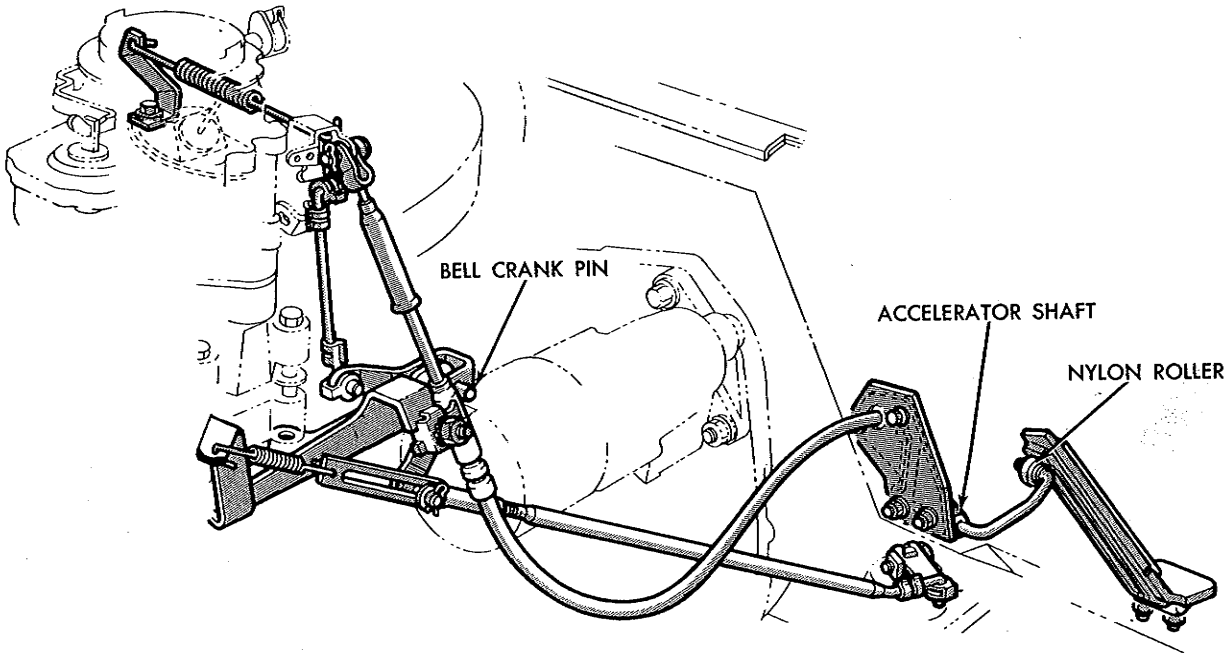


NK395

*Fig. 80—Throttle Linkage Lubrication Points (Fury Models-6-Cyl. Engine)*

### *Throttle Linkage Lubrication (Belvedere Models with 273 Cu. In. Engine)*

Apply a thin film of Automotive Multi-Purpose Grease, NLGI Grade 2, to both ends of the accelerator shaft where it turns in the bracket and where the nylon roller rolls on it (Fig. 78).

### *Throttle Linkage Lubrication (Belvedere and Fury Models with 318, 361, 383 and 426 Cu. In. Engines)*

Apply a thin film of Automotive Multi-Purpose Grease, NLGI Grade 2, to both ends of the accelerator shaft where it turns in the bracket and where the nylon roller rolls on it (Fig. 79). On models with automatic transmission, also, apply a thin film of the same lubricant to the roller where it contacts the underside of the pedal and to the pivot points of both upper and lower linkage bellcranks.

### *Throttle Linkage Lubrication (Fury 6-Cyl. Engines)*

Apply a thin film of Automotive Multi-Purpose Grease, NLGI Grade 2, to both ends of the accelerator shaft where it turns in the bracket and where the nylon roller rolls on it (Fig. 80). Also, apply a thin film of the same lubricant to the engine mounted bellcrank pin.

## PARTS REQUIRING NO LUBRICATION

There are many points that should not be lubricated, some because they are permanently lubricated, some because lubricants will be detrimental to their operating characteristics, and some because lubricants will cause component failures. In any event, rubber bushings should not be lubricated, not only because lubricants will cause rubber to fail, but also will destroy their necessary friction characteristics. The following parts should not be lubricated.

- Accelerator Pedal
- All Rubber Bushings
- Alternator Bearings
- Automatic Transmission Controls and Linkage
- Carburetor Air Cleaner (Paper Element Type)
- Clutch Pedal Push Rod Ends
- Clutch Release Bearing
- Drive Belts
- Fan Belt Idler Pulley
- Rear Springs
- Rear Wheel Bearings
- Starting Motor Bushings
- Upper and Lower Control Arm Bushings
- Water Pump Bearings

MyMopar.com

MyMopar.com

# ACCESSORIES

## CONTENTS


| | Page | | Page |
|---|---|---|---|
| AUTO PILOT | 1 | RADIOS AND ANTENNAS | 13 |
| ELECTRIC CLOCK | 5 | WINDSHIELD WASHERS | 20 |
| HEATERS | 5 | | |


## AUTO PILOT

### INDEX


| | Page | | Page |
|---|---|---|---|
| General Information | 1 | Service Diagnosis | 1 |
| Installation | 4 | Tests and Adjustments | 2 |
| Removal | 4 | | |


### GENERAL INFORMATION

The auto pilot is a driver operated voluntary speed control. It can be used either as a warning signal to indicate that a pre-set speed has been reached, or as a fully automatic vehicle speed regulator.

The auto pilot instrument panel control is used to set the auto pilot to a desired speed for existing driving conditions. When the pre-set speed is reached, the auto-pilot provides a reaction pressure to the accelerator pedal pressure. Since the reaction pressure is low, five to seven pounds, the driver can over-ride the setting by pressing the accelerator through the reaction pressure.

#### *Operation*

The auto pilot is self engaging when the pre-set vehicle speed is reached. Set the instrument panel control to the desired speed and pull the button in the center of the control "OUT." When the desired vehicle speed is reached the reaction pressure is felt in the accelerator pedal. At the point of reaction pressure the driver's accelerator pedal pressure is relaxed and the accelerator is in the auto pilot automatic regulation. The auto-pilot will automatically advance the accelerator on uphill operation and retard on down grade operation. Auto pilot automatic control ceases instantly with the slightest brake pedal movement and the accelerator will revert to manual control. Disengagement of the automatic control may also be accomplished by pushing "IN" the button in the center of the instrument panel control or turning the ignition switch to "OFF."

#### *Lubrication*

All internal working parts of the auto pilot are equipped with self-lubricated bearings which have been factory lubricated for the service life of the unit.

### SERVICE DIAGNOSIS

| Condition | Possible Cause | Correction |
|---|---|---|
| It is recommended that the diagnosis be performed in the sequence outlined. If diagnosis shows the trouble to be internal in the Auto Pilot drive mechanism it is recommended that the unit be replaced. Do not attempt any internal service on the drive mechanism. | | |
| **AUTO PILOT CONTROL BUTTON DOES NOT REMAIN OUT WITH IGNITION ON** | (a) Blown fuse.<br>(b) Poor electrical connections to the control.<br>(c) Faulty control. | (a) Replace the fuse.<br>(b) Check the connections and the instrument panel control for grounding.<br>(c) Replace the control unit if necessary. |
| **NO "SPEED WARNING" PEDAL PRESSURE** | (a) Blown fuse or faulty wiring in motor circuit (red wire).<br>(b) Accelerator linkage broken or disconnected. | (a) Test wiring circuits. See "Electrical Tests."<br>(b) Connect or replace the linkage and adjust. |
| **"SPEED WARNING" PEDAL PRESSURE AT ALL SPEEDS (including below 22 miles per hour)** | (a) Faulty electrical circuit. | (a) See "Electrical Tests" (Red Wire). |
| **AUTOMATIC LATCHING DOES NOT ENGAGE WHEN BUTTON IS PULLED OUT. "SPEED** | (a) Insufficient brake switch clearance.<br>(b) Brake pedal not returning fully.<br>(c) Faulty electrical circuit. | (a) Adjust auto pilot brake switch.<br>(b) Test brake pedal for full return. Adjust or repair as necessary.<br>(c) See "Electrical Tests" (Blue and |

MyMopar.com

| Condition | Possible Cause | Correction |
|---|---|---|
| WARNING" O.K. | | Black Wires). |
| AUTOMATIC LATCH ENGAGES AT SELECTED SPEED WITH CONTROL BUTTON PUSHED IN | (a) No. 3 black wire to the panel control is grounded.<br>(b) Faulty grounding switch in the instrument panel control. | (a) Test the circuit for ground and repair if necessary. (Black Wire).<br>(b) Test at No. 3 terminal. Replace control unit if necessary. |
| AUTOMATIC LATCH REMAINS ENGAGED WHEN BRAKE PEDAL IS TOUCHED | (a) Faulty or improperly adjusted brake switch. | (a) Test and adjust the brake switch. Replace if necessary. |
| UNIT DISENGAGES INTERMITTENTLY ON ROUGH ROADS | (a) Poor electrical connections.<br>(b) Insufficient brake switch clearance. | (a) See "Electrical Tests" (Black and Blue Wires).<br>(b) Adjust brake switch to specifications. |
| AUTO PILOT WILL NOT FUNCTION AT LOW END OF DIAL | (a) Improper control cable adjustment. | (a) Adjust control cable. |
| PULSATING ACCELERATOR PEDAL | (a) Speedometer cable or drive cable kinked.<br>(b) Lack of cable lubrication.<br>(c) Improper accelerator linkage adjustment. | (a) Align the cables. Replace if necessary.<br>(b) Lubricate the cables.<br>(c) Adjust the accelerator linkage. |
| CARBURETOR DOES NOT RETURN TO NORMAL IDLE | (a) Improper auto pilot linkage adjustment.<br>(b) Standard throttle linkage faulty. | (a) Adjust the auto pilot linkage.<br>(b) Repair or replace the linkage. |
| SPEEDOMETER DOES NOT REGISTER OR UNIT DOES NOT OPERATE | (a) Speedometer drive pinion in transmission is faulty.<br>(b) Faulty speedometer cable.<br>(c) Faulty drive cable from transmission to the auto-pilot drive mechanism.<br>(d) Faulty speedometer. | (a) Replace the speedometer drive pinion.<br>(b) Replace the speedometer cable.<br>(c) Replace the drive cable.<br>(d) Repair or replace the speedometer if necessary. |
| SPEEDOMETER NOISE | (a) Cables bent or kinked.<br>(b) Lack of cable lubrication.<br>(c) Noisy speedometer head assembly. | (a) Replace the cables.<br>(b) Lubricate the cables.<br>(c) Repair or replace the speedometer as necessary. |
| UNIT REPEATEDLY BLOWING FUSES | (a) Short circuit in wiring, drive mechanism or switches. | (a) See "Electrical Tests". |

## TESTS AND ADJUSTMENTS

The following mechanical and electrical tests will aid in isolating and correcting malfunction conditions for the auto pilot. Service Diagnosis procedures must be followed to make certain the malfunction is in the auto pilot unit and not in some other component of the system.

If the malfunction cannot be definitely isolated, it is recommended that the tests and adjustments be performed in the following sequence:

Accelerator Linkage Adjustment
Control Cable Adjustment
Electrical

### *Accelerator Linkage Adjustment (Fig. 1)*

(1) Make certain automatic choke is "OFF" and carburetor is at normal idle position. Operate linkage

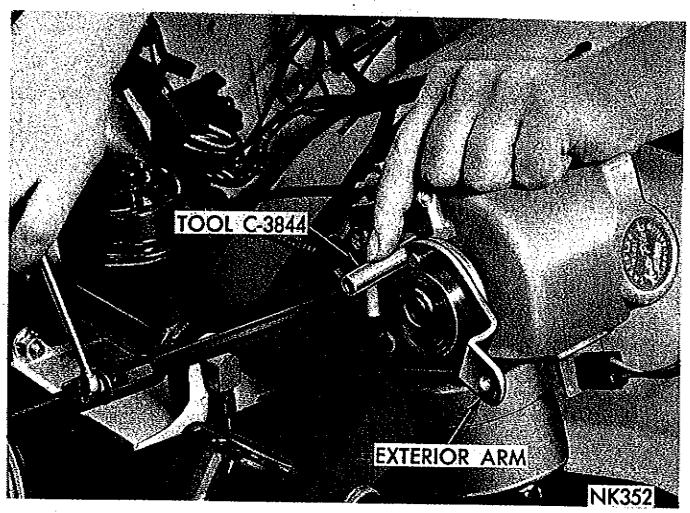


*Fig. 1—Accelerator Linkage Adjustment*

MyMopar.com

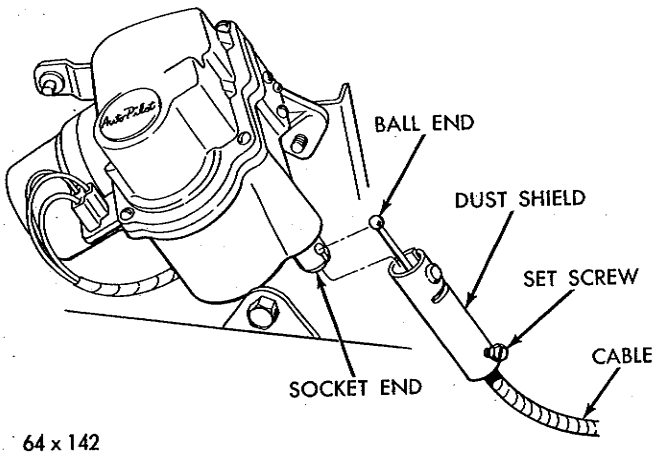


*Fig. 2—Auto Pilot Dust Shield*

by moving auto-pilot exterior arm several times and allow linkage to ease into its normal position. Do not force linkage to close throttle.

(2) Loosen lock nut on auto pilot linkage rod and insert locking arm gauge Tool C-3844 over stop stud on auto pilot.

(3) Hold exterior arm against gauge pin and tighten lock nut on linkage. This will provide proper clearance between stop stud and exterior arm with carburetor in idle position.

### Control Cable Adjustment

(1) Loosen but do not remove set screw on dust shield. (This screw retains control cable in bottom of dust shield) (Fig.2).

(2) Rotate instrument panel control dial counterclockwise until it contacts internal stop.

(3) Push in lightly on control cable at dust shield. This will position control rod, to which inner cable attaches, against its upper stop.

**CAUTION: Do not force cable beyond this position.**

(4) Make certain instrument panel control dial is still against its extreme counterclockwise stop.

(5) Tighten screw on dust shield securely.

**A correctly adjusted control cable will not spring back on full rotation in either direction.**

### Electrical Tests (Fig. 3)

(1) Turn ignition switch to "ON" or "Accessory" position. DO NOT START ENGINE.

(2) Pull auto pilot control button in center of instrument panel control. **Leave button out for all electrical tests.** If control button will not stay out, test for a blown fuse, feed wire disconnected or poor grounding of the control.

(3) **Terminal No. 1 (Red Wire)**—using a test light, ground one test light lead and touch other lead to terminal No. 1 (Fig. 4). The test light should light. If light fails to light, test for an "open" circuit in red wire between auto pilot and ignition circuit.

(4) **Terminal No. 2 (Blue Wire)**—Ground one lead of test light and touch other lead to No. 2 terminal (Fig. 4). If light fails to light, test for "open" connec-

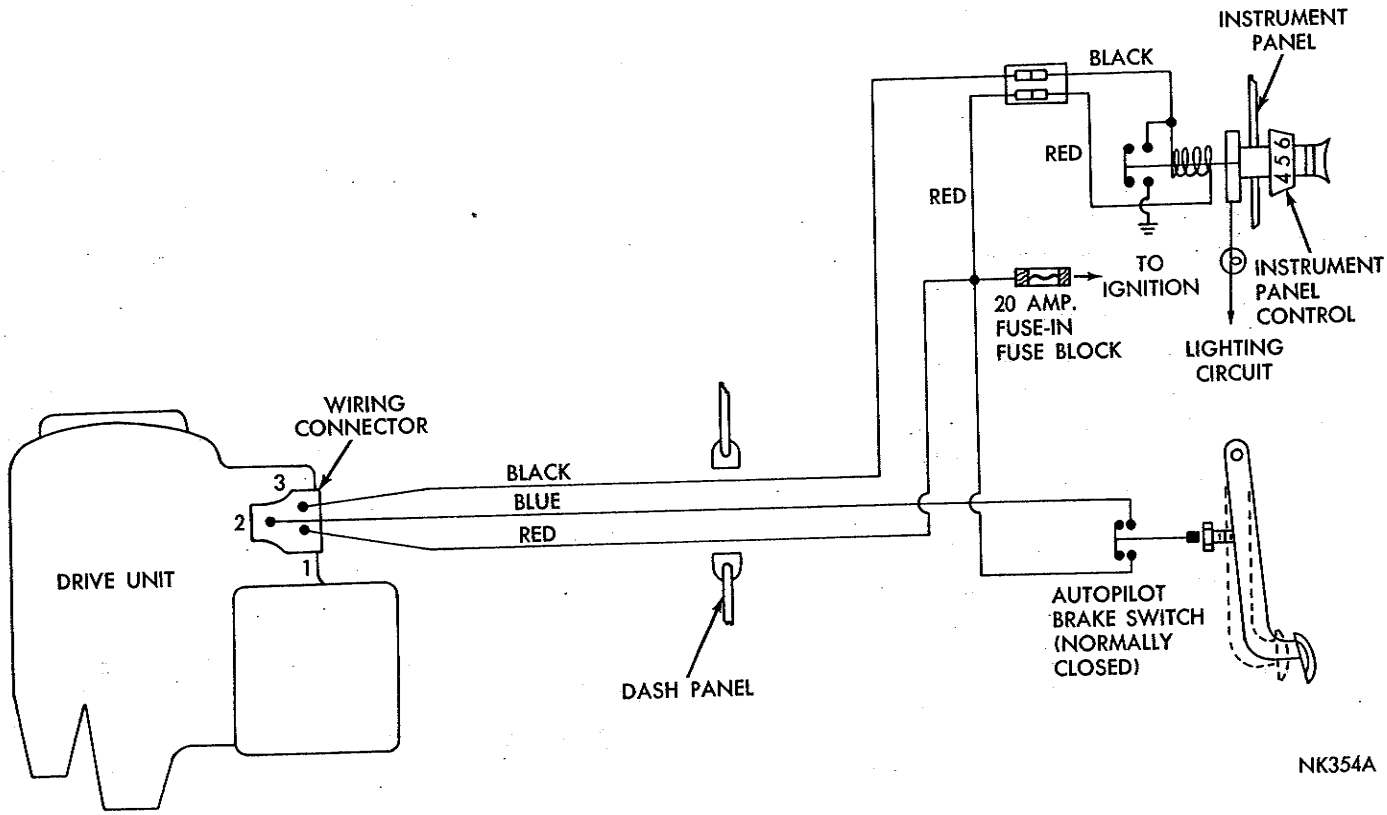


*Fig. 3—Auto Pilot Wiring Diagram*

MyMopar.com

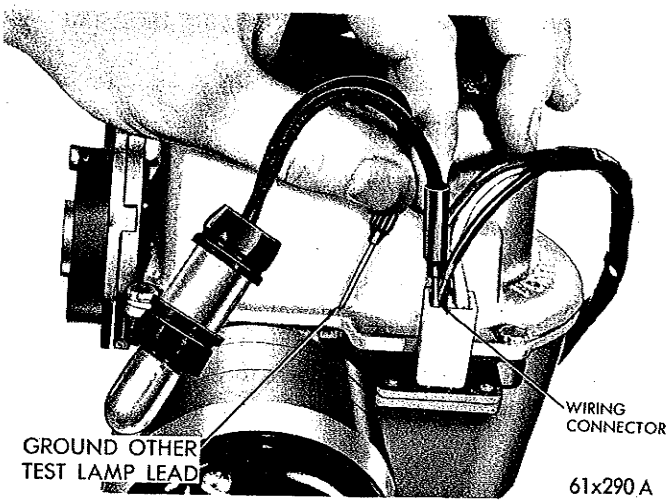


*Fig. 4—Testing Wiring Circuits*

tions in blue wire between auto-pilot and auto-pilot brake switch. If circuit is "open" at brake switch, test brake switch adjustment. **It is important that this adjustment be carefully performed to insure proper auto-pilot operation.**

Adjust brake switch (Fig. 5) until light goes out with approximately ¼ to ½ inch of brake pedal movement.

For convenience in adjusting brake switch, test lamp can be connected to "Blue Wire" side of switch.

**To replace auto-pilot brake switch, brake pedal and bracket assembly will have to be removed.**

(5) **Terminal No. 3 (Black Wire)**—insert one lead of test light in the No. 1 terminal and other lead of test light in the No. 3 terminal (Fig. 4). The test light should light. If light fails to light, test for an "open" circuit in black wire circuit between auto-pilot and instrument panel control. If light still fails to light, inspect instrument panel control for proper grounding. When control button is pushed in, light should go out if circuit is wired correctly.

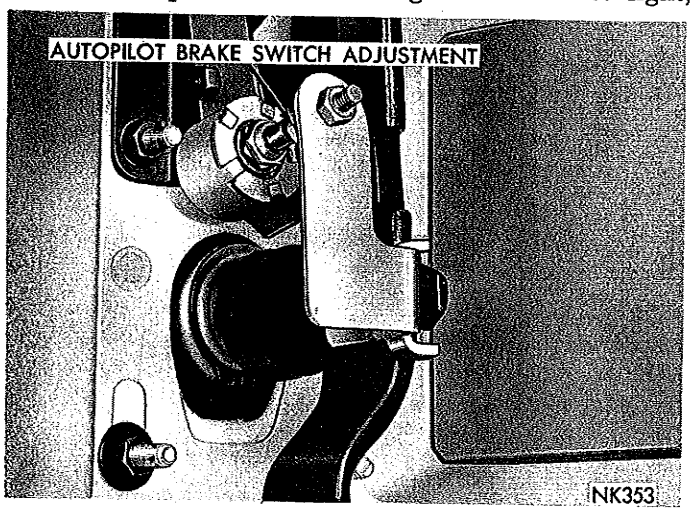


*Fig. 5—Auto Pilot Brake Switch*

### *Dial Calibration*

(1) On a level stretch of road engage auto-pilot at full counterclockwise dial position. Carefully increase dial setting to the "3" mark on dial, being careful not to overshoot the "3" mark. If the "3" mark is overshot repeat setting procedure from below the "3" mark.

(2) Record speedometer reading with dial at the "3" mark.

(3) Move dial to the "4" mark and record speedometer reading again being careful not to overshoot the "4" mark.

(4) Repeat procedure at higher speeds until normal driving range has been covered.

(5) Repeat procedure as dial position is lowered through normal driving range being careful to avoid downward overshooting of desired mark on dial.

(6) Examine recorded speedometer reading at each dial setting for both "upward" and "downward" indications and adjust dial for best overall correlation between auto-pilot control dial and speedometer.

The dial is adjusted by loosening control knob set screw. Calibrate dial in respect to knob setting. Tighten control knob set screw and recheck calibration.

## DRIVE MECHANISM

### *Removal*

(1) Disconnect wire connector at drive mechanism.

(2) Disconnect drive cable and speedometer cable at drive unit.

A small piece of tape will prevent ferrule nut on drive cable from falling down the cable.

(3) Loosen set screw at lower end of dust shield. It is not necessary to remove screw.

(4) Turn and pull dust shield from housing and slide dust shield down cable and slip ball end of bowden cable out of socket.

(5) Disconnect accelerator linkage from exterior arm on drive unit.

(6) Remove bolts and nuts securing drive mechanism to mounting brackets and remove drive mechanism leaving brackets in vehicle.

### *Installation*

(1) Position drive mechanism on mounting brackets and install mounting bolts and nuts.

(2) Connect drive cable and speedometer cable to

MyMopar.com

lrive mechanism.

(3) Connect accelerator linkage to exterior arm on lrive mechanism. Adjust linkage.

(4) Install ball end of bowden cable in socket on lrive mechanism.

(5) Install dust shield on housing. Push in and turn clockwise. Do not tighten set screw on end of dust shield until after control cable is properly adjusted.

(6) Adjust control cable.

(7) Connect wiring connector at drive mechanism.

## ELECTRIC CLOCK

### GENERAL INFORMATION

A solenoid actuated, self regulating electric clock is available as optional eqiupment on Fury, Belvedere and Satellite models. The clock can be regulated by pulling out on the reset knob below the clock face and turning until the correct setting is obtained.

The clock will regulate itself **only** if the correction of setting is greater than five minutes. If the clock is gaining time, set the clock back to the correct time. If the clock is running slow, advance it to the correct time. Regulation will take place during the next rewind cycle of the clock immediately following the regulation setting. One setting will regulate approximately 20 seconds in a 24 hour period.

### SERVICE DIAGNOSIS

| Condition | Possible Cause | Correction |
|---|---|---|
| CLOCK DOES NOT OPERATE | (a) Wire loose or off terminal.<br>(b) Internal short. | (a) Install connector on terminal.<br>(b) Repair or replace the clock as necessary. |

### FURY MODELS

#### *Removal*

(1) Remove radio control knobs, two radio mounting nuts, heater temperature control knob, clock reset knob and six bezel retaining screws.

(2) Remove bezel, two clock light bulbs and ash receiver light bulb.

(3) Next remove the two metal screws retaining clock and withdraw from front of panel.

#### *Installation*

(1) Position clock in opening and fasten with two metal screws.

(2) Install ash receiver light bulb, two clock light bulbs and position bezel on panel.

(3) Install six bezel retaining screws, clock reset knob, heater temperature control knob, two radio mounting nuts and radio control knobs.

### BELVEDERE AND SATELLITE MODELS

#### *Removal*

(1) Disconnect battery ground cable.

(2) From under instrument panel, disconnect clock feed wire and remove light bulb socket.

(3) From under instrument panel, remove the two mounting nuts from bezel studs.

(4) Remove clock from under panel and bezel from front of panel.

#### *Installation*

(1) Position bezel on front of instrument panel.

(2) Holding bezel with one hand, install clock on bezel studs from under instrument panel with other hand.

(3) Install the two nuts on bezel studs.

(4) Install light bulb socket and feed wire.

(5) Connect battery ground cable.

## HEATERS

### INDEX

**Valiant Barracuda**


| | Page |
|---|---|
| Assembly | 12 |
| Blower Motor | 11 |
| Blower Motor Resistor | 11 |
| Controls | (See Instruments and Indicators—Group 8) |
| Control Cable Adjustment | 6 |
| Defrosters | 12 |
| Disassembly | 12 |
| General Information | 6 |
| Heater Core | 11 |
| Heater Doors | 11 |
| Installation | 11 |
| Rear Window Defroster | 12 |
| Removal | 11 |


MyMopar.com

**Belvedere Satellite**


| | Page | | Page |
|---|---|---|---|
| Assembly | 12 | Disassembly | 12 |
| Blower Motor | 11 | General Information | 6 |
| Blower Motor Resistor | 11 | Heater Core | 11 |
| Controls | (See Instruments and Indicators—Group 8) | Heater Doors | 11 |
| | | Installation | 10 |
| Control Cable Adjustment | 8 | Rear Window Defroster | 12 |
| Defrosters | 12 | Removal | 9 |


**Fury**


| | Page | | Page |
|---|---|---|---|
| Assembly | 12 | Disassembly | 12 |
| Blower Motor | 11 | General Information | 6 |
| Blower Motor Resistor | 11 | Heater Core | 11 |
| Controls | (See Instruments and Indicators—Group 8) | Heater Doors | 11 |
| | | Installation | 10 |
| Control Cable Adjustment | 6 | Rear Window Defroster | 12 |
| Defrosters | 12 | Removal | 10 |


## GENERAL INFORMATION

All Plymouth models use a "Blend Air" type heater (Figs. 1, 2 and 3). Fresh air enters the heater through the cowl grille and passes through a plenum chamber to the heater core. A temperature control door in the heater plenum chamber directs the fresh air either through or past the heater core. The amount of "blend" is determined by the setting of the temperature lever on the instrument panel. Direction of the "blended air" is controlled by the "Heat-Defrost" lever on the instrument panel.

The blower switch determines the speed of the blower motor and the velocity of the air flow from the heater outlets.

On Valiant and Barracuda models, two fresh air ducts, for warm weather use, are located under each end of the instrument panel. By opening the doors on these ducts, fresh air bypasses the heater and is rammed into the vehicle (Figs. 4 and 5). **Make sure these doors are closed during heater operation.**

On Belvedere and Satellite models, the ventilator doors are controlled by knobs mounted under the instrument panel.

## SERVICE DIAGNOSIS

| Condition | Possible Cause | Correction |
|---|---|---|
| **INSUFFICIENT HEAT** | (a) Carpet over heater outlets. | (a) Reposition carpet. |
| | (b) Radiator hoses leaking. | (b) Correct leak and bleed system. |
| | (c) Obstructed heater hose. | (c) Replace heater hoses. |
| | (d) Temperature door not closed or leaking. | (d) Adjust temperature control cable. See "Cable Adjustments." |
| | (e) Shut-off or defroster door improperly adjusted. | (e) Adjust the Heater-Defroster Control Cable. See "Cable Adjustments." |
| | (f) Engine thermostat open. | (f) Replace thermostat. |
| | (g) Coolant too low. | (g) Fill the radiator. |
| **TOO MUCH HEAT** | (a) Disengaged cable on temperature door. | (a) Connect or replace cable. |
| | (b) Thermostat stuck in closed position. | (b) Replace thermostat. |
| **BLOWER MOTOR NOT OPERATING** | (a) Blown fuse. | (a) Check for excessive resistance in circuit and replace fuse. |
| | (b) Faulty electrical connection. | (b) Tighten all electrical connections. |
| | (c) Faulty blower switch. | (c) Replace switch. |
| | (d) Faulty motor. | (d) Replace motor. |

## HEATER CONTROL CABLE ADJUSTMENTS

### *Valiant, Barracuda and Fury Models*

(1) Disconnect the three cables at heater assembly.

(2) With control assembly removed from instrument panel, position three control cables so approximately ¼ inch of cable housing extends beyond edge of cable retaining clips.

(3) Install control assembly on instrument panel.

MyMopar.com

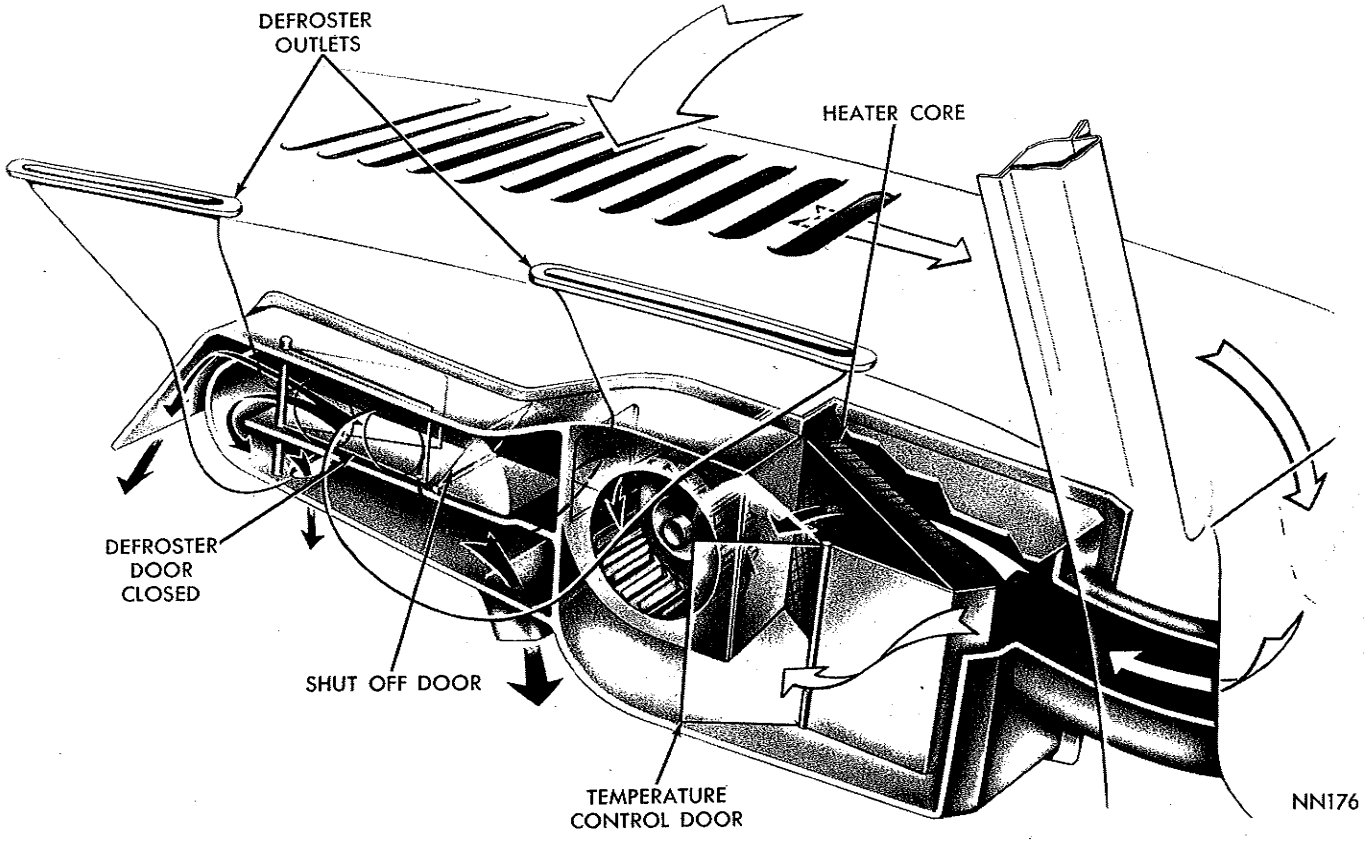


***Fig. 1—Heater—Fury Models***

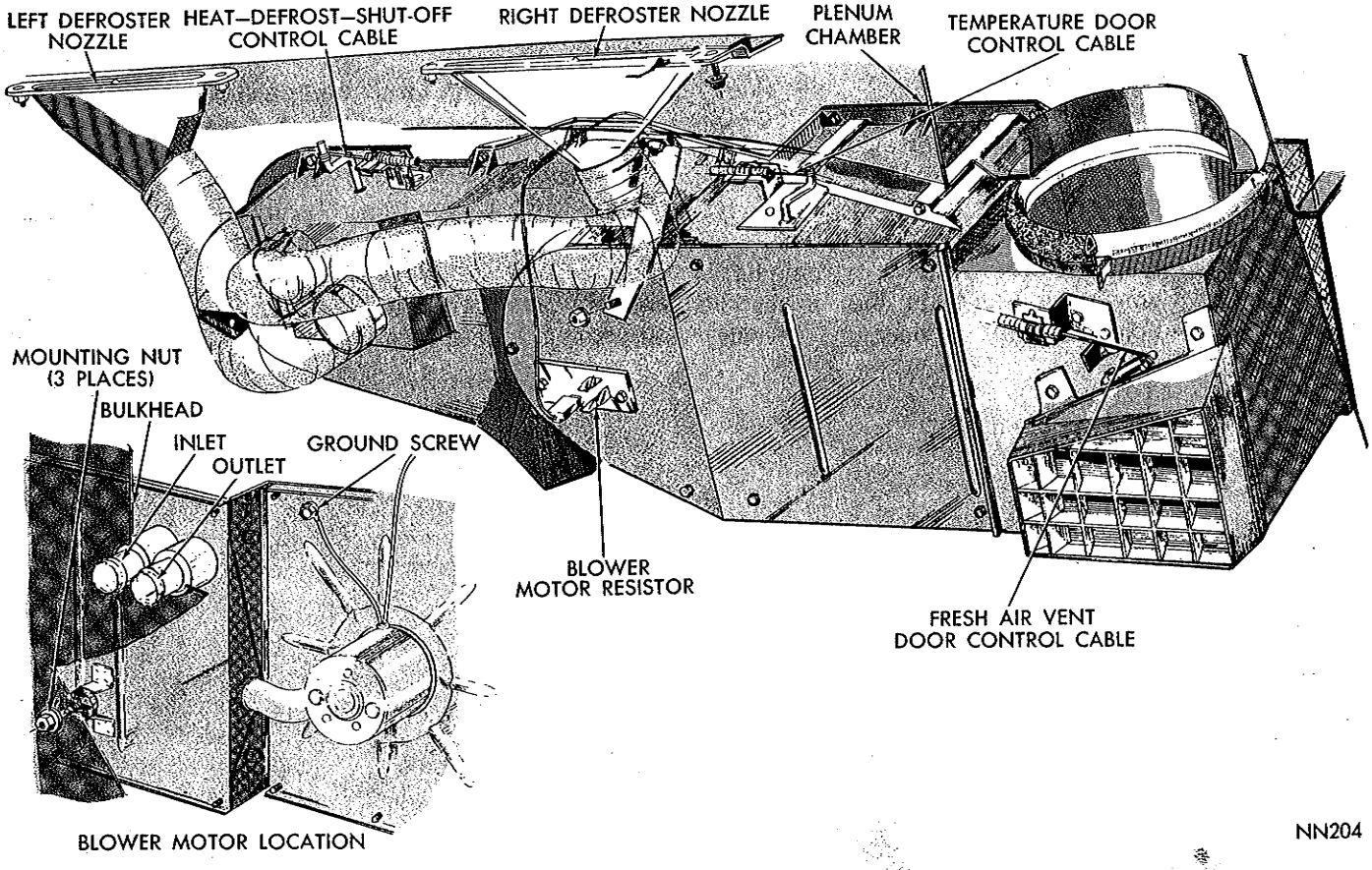


***Fig. 2—Heater—Belvedere and Satellite Models***

MyMopar.com

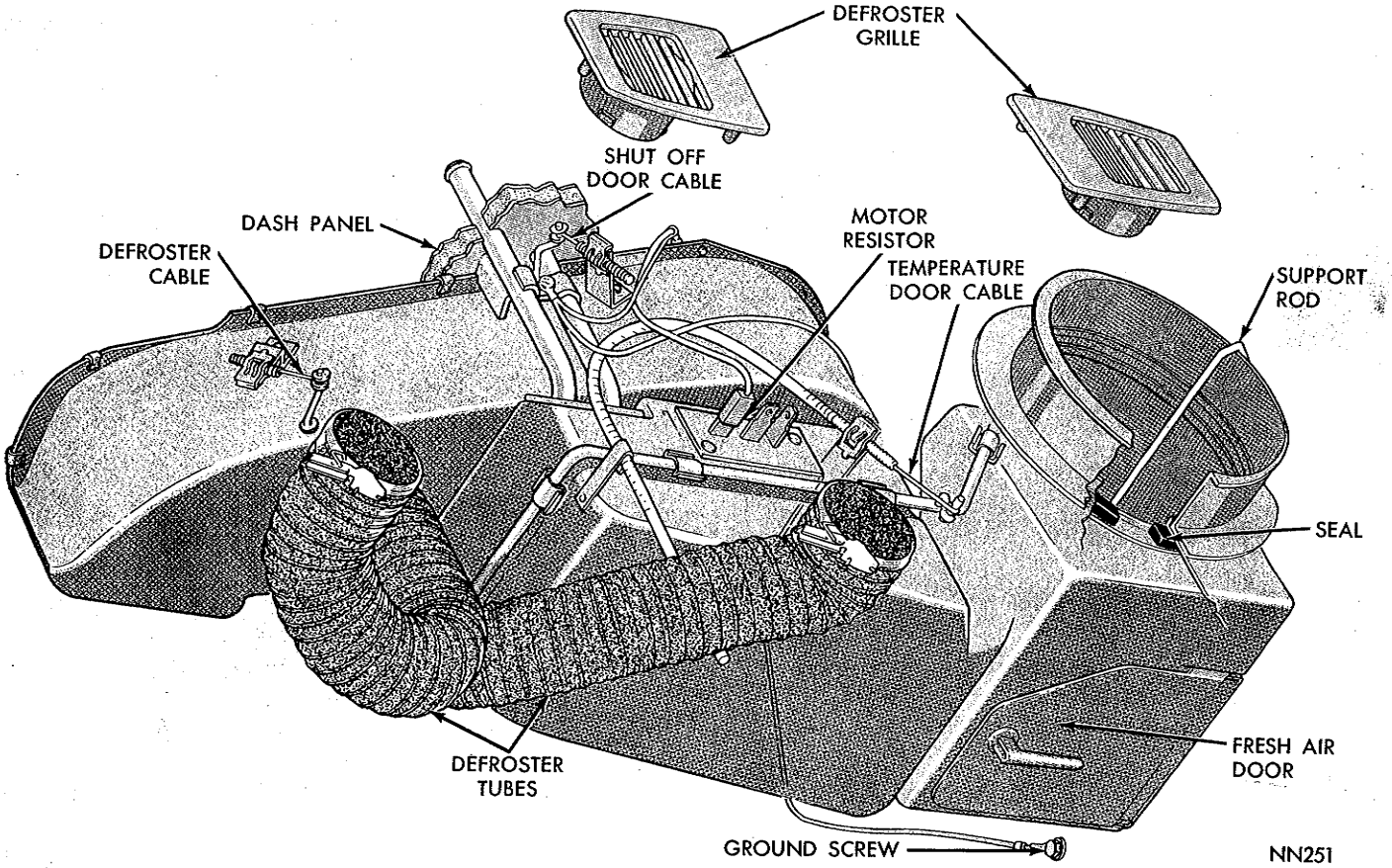


*Fig. 3—Heater—Valiant and Barracuda Models*

(4) Place top control lever in middle or "Heat" position and connect heater defroster cable (left cable) to heater defroster door of heater assembly while holding door in extreme clockwise position.

(5) Connect fresh air cable (middle cable) to middle door of heater defroster door of heater assembly while holding door in extreme clockwise position.

(6) Place temperature control lever in extreme left, "Off" position. Connect cable to right door of heater assembly while holding crank of door in extreme clockwise position.

**For Heater Control and Switch removal, see "Switches in Instruments and Indicators"-Group 8.**

### *Belvedere and Satellite Models*

To adjust heater control cables, the adjustment must be correct at the instrument panel control assembly first. It is necessary to remove the control assembly from the instrument panel to make these adjustments. See "Heater Controls" in "Instruments

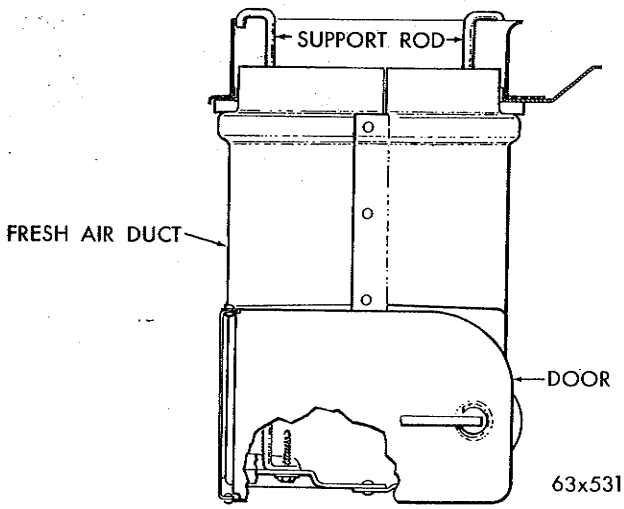


*Fig. 4—Fresh Air Duct—Driver's Side*

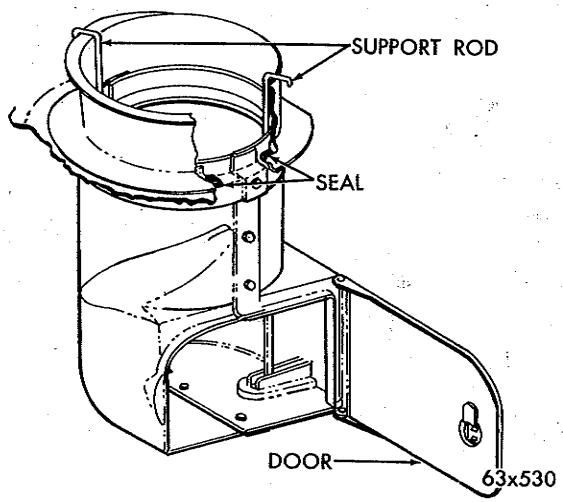


*Fig. 5—Fresh Air Duct—Passenger Side*

MyMopar.com

and Indicators," Group 8.

The Temperature control cable and the "Heat-Defrost" control cable should be positioned, at the control assembly, so that the ends of the cable housings are flush with the edge of the mounting plate. Final cable adjustments should be made at the heater ends of the cables.

To adjust the "Heat-Defrost" cable, place the control lever on the instrument panel in the center detent. Remove the cable clip at the heat-defrost door and place Tool C-4003 on the door shaft (Fig. 6). Be sure that the instrument panel control lever remains in the center detent while installing the cable clip at the heater. Remove the adjusting tool and test the heater operation.

To adjust the "Temp" control cable, remove the cable clip at the temperature control door. Place the temperature control lever to the extreme left position. Rotate the temperature control door shaft to the extreme clockwise position and reinstall the cable clip. Be sure the instrument panel control lever remains in the extreme left position during this adjustment.

### *Fresh Air Vent Control Cable—Belvedere and Satellite Models*

Push the fresh air control knob in. Remove the control cable clip from the door control crank arm bracket. Rotate the crank arm of the door to the closed position (left side counterclockwise; the right side clockwise) and reinstall the cable to the crank arm bracket.

### *Temperature Control Cable (Air Conditioning)— Belvedere and Satellite Models*

Remove the clip from the water valve control cable bracket. While holding the temperature control lever on the instrument panel in the extreme right position, attach the control cable to the water valve. The end of the cable housing, butts against the stop on the valve. Connect the cable loop to the control arm with the core wire pulled all the way out of the cable housing. Install the clip.

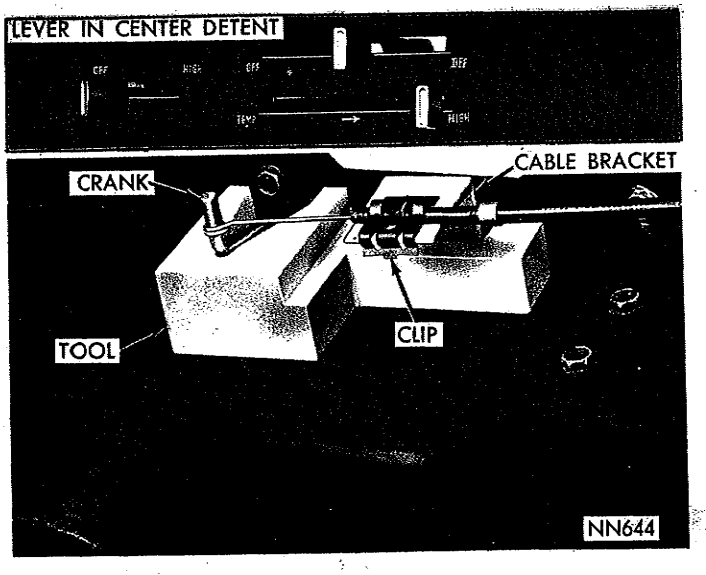


*Fig. 6—Adjusting "Heat-Defrost" Control Cable*

**On Valiant and Barracuda models equipped with air conditioning, the temperature control cable is adjusted in the same manner as the heater temperature control cable.**

## HEATER—Belvedere and Satellite Models

On models equipped with console it is necessary to move the console back before removing the heater as follows:

(a) From inside console storage compartment remove, two console mounting bolts and two metal screws from the front sides in carpeting.

(b) Remove two shift indicator bezel screws, put gear selector in "Drive" position, pull bezel back and turn 90 degrees. Allow bezel to rest across top of console.

(c) Remove two mounting screws at rear of gear selector bracket, disconnect back up light switch connector and remove gear selector light bulb. Move console back. Heater may now be removed.

After heater is installed, the console is installed as follows:

(a) Align console to mounting brackets and install rear mounting bolts in console storage compartment, in rear of gear selector bracket and install two screws in front sides of console carpet.

(b) Connect back-up light switch wire and install gear selector light bulb.

(c) Install gear selector bezel by engaging front tabs under console housing lip and securing with the two metal screws at storage compartment end lip.

### *Removal*

(1) Drain radiator and disconnect battery ground cable.

(2) Remove upper half of glove box.

(3) In engine compartment, disconnect heater hoses at bulkhead. Plug hose fittings on heater to prevent any coolant from spilling on interior trim as heater assembly is removed.

(4) From under instrument panel, remove heater to cowl support bracket.

(5) Remove defroster hoses and disconnect wiring from heater motor resistor.

(6) Disconnect fresh air vent control and shut off door cables at heater from under instrument panel. Reaching through glove box, disconnect temperature control door cable.

(7) From inside engine compartment, remove three nuts that mount heater to bulkhead.

(8) Rotate heater assembly until mounting studs are up and carefully remove heater from under instrument panel.

MyMopar.com

### Installation

(1) Position heater assembly under instrument panel (mounting studs up) and connect temperature control door and defroster door cables. See "Control Cable Adjustments."

(2) Rotate heater into position onto bulkhead and support heater housing with a suitable block of wood.

(3) From inside engine compartment, install retaining nuts.

(4) Install heater hoses (Figs. 5, 6 and 7).

(5) Under instrument panel, install heater to cowl support bracket.

(6) Connect and adjust fresh air control and shut off door cable at heater from under instrument panel. Connect temperature control door cable by reaching through glove box opening. See "Control Cable Adustments" Group 8.

(7) Connect defroster hoses and wiring to heater blower motor resistor.

(8) Refill cooling system and connect battery ground cable.

(9) Install upper half of glove box.

(10) Start engine, bleed system, inspect for leaks and test operation of heater.

### Removal—Fury Models

(1) Drain the radiator and disconnect battery ground cable.

(2) In engine compartment, disconnect heater hoses at bulkhead. Plug hose fittings on heater to prevent any coolant from spilling on interior trim as heater assembly is removed.

(3) From under instrument panel, remove heater to cowl support bracket.

(4) Remove defroster hoses and disconnect wiring from heater motor resistor.

(5) Remove glove box and disconnect three heater control cables at heater through glove box opening.

(6) Disconnect fresh air intake hose on right side of heater. **Do Not Remove Connector.**

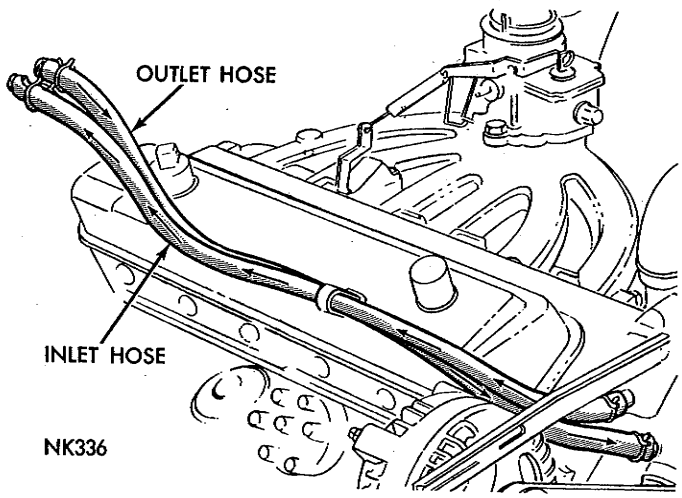


*Fig. 7—Heater Hose Connections—225 Cu. In. Engine—Belvedere, Satellite and Fury Models*

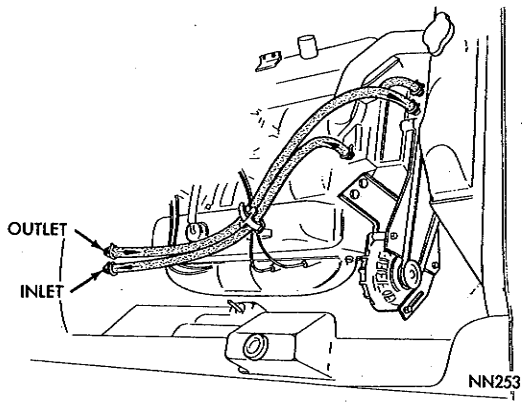


*Fig. 8—Heater Hose Connections—318-273 Cu. In. Engines—Belvedere, Satellite and Fury Models*

(7) From inside engine compartment, remove the three nuts mounting heater to bulkhead.

(8) Pull carpet or mat out from under instrument panel. Pull heater assembly toward inside of car and rotate heater until mounting studs are down. Remove heater from vehicle.

### Installation

(1) Position heater assembly under instrument panel with mounting studs down. Rotate heater toward front of vehicle until mounting studs protrude through bulkhead.

(2) From inside engine compartment, install the three retaining nuts.

(3) Install heater hoses (Figs. 7, 8 and 9).

(4) Under instrument panel, install heater to cowl support bracket. Connect fresh air intake flexible hose at this itme.

(5) Connect and adjust all three control cables through the glove box opening. See "Control Cable Adjustment."

(6) Connect defroster hoses and wiring to heater blower motor resistor. Install carpet or mat and glove box.

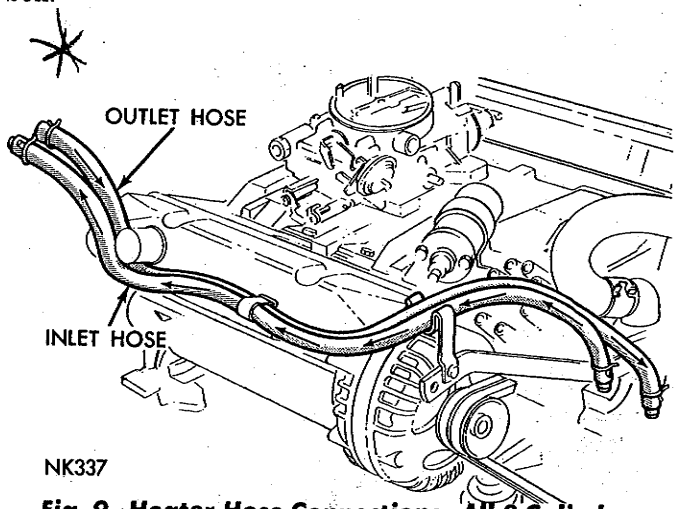


*Fig. 9—Heater Hose Connections—All 8 Cylinder Engines except 273 and 318 Cu. In. Engines—Belvedere, Satellite and Fury Models*

MyMopar.com

(7) Refill cooling system and connect battery ground cable.

(8) Start engine, bleed system, inspect for leaks and test operation of heater.

## BLOWER MOTOR—Belvedere, Satellite and Fury Models

### Removal

(1) Remove heater as outlined in "Heater Removal."

(2) Disconnect wiring from blower motor to heater assembly.

(3) Remove motor cooler tube.

(4) Remove heater backplate assembly from heater.

(5) Remove fan from motor shaft.

(6) Remove blower motor from backplate.

### Installation

(1) Install blower motor on backplate.

(2) Install fan on motor shaft. Adjust for clearance between motor and fan.

(3) Install heater backplate on heater.

## HEATER CORE—Belvedere, Satellite and Fury Models

### Removal

(1) Remove heater as outlined in "Heater Removal."

(2) Remove heater cover to expose heater core.

(3) Remove screws that mount core to heater assembly and remove core.

### Installation

(1) Position core in heater assembly and install core mounting screws.

(2) Install heater cover.

(3) Install heater as outlined in "Heater Installation."

(4) Install motor cooler tube.

(5) Connect wiring from heater assembly to motor.

(6) Install heater as outlined in "Heater Installation."

### Blower Motor Resistor Replacement—Belvedere, Satellite and Fury Models

(1) From under instrument panel disconnect wiring to resistor.

(2) Remove the two screws that mount resistor assembly to heater and remove resistor.

(3) Position new or repaired resistor in heater and install the two mounting screws.

(4) Connect wiring to resistor assembly.

### Heater Door Service—Belvedere, Satellite and Fury Models

To service the heater fresh air door, heater regulator door or the heater defroster door, the heater must be removed from the vehicle and disassembled. Refer to the "Heater Core" and "Blower Motor" Removal and Installation.

### Removal—Valiant, Barracuda

To service the heater core or blower motor, it is necessary to remove the heater assembly from the vehicle.

(1) Disconnect battery ground cable and drain radiator.

(2) Disconnect heater hoses from heater and remove heater hoses to dash panel seal and retainer plate (Fig. 10).

(3) Disconnect wires from heater motor.

(4) Remove heater motor seal retainer plate and seal from dash panel (Fig. 10).

(5) Disconnect heater and defroster control cables from heater assembly (Fig. 3).

(6) Remove heater motor resistor wire from resistor (Fig. 3).

(7) Remove defroster tubes from heater assembly.

(8) Disconnect heater housing support rod from fresh air duct (Fig. 3).

(9) Remove heater assembly.

### Installation

(1) Position heater assembly on dash panel by sliding four mounting studs into their respective holes in dash panel.

(2) Connect and adjust heater-defroster cable and temperature control cables to their respective control arms.

(3) In engine compartment side, install heater to dash panel seal, seal retainer and mounting nuts.

(4) Position seal and seal retainer over heater tubes and install attaching screws.

(5) Connect heater hoses to heaters (Figs. 11 and 12).

(6) On passenger compartment side, connect heater support rod to heater housing.

(7) Connect wire to heater motor resistor.

(8) Connect defroster tubes to heater.

(9) Fill cooling system, start engine and operate until normal engine operating temperature is obtained.

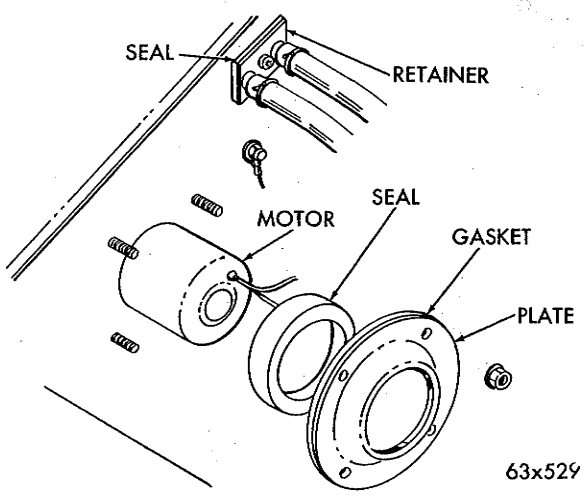


*Fig. 10—Heater Mounting—Engine Side*

MyMopar.com

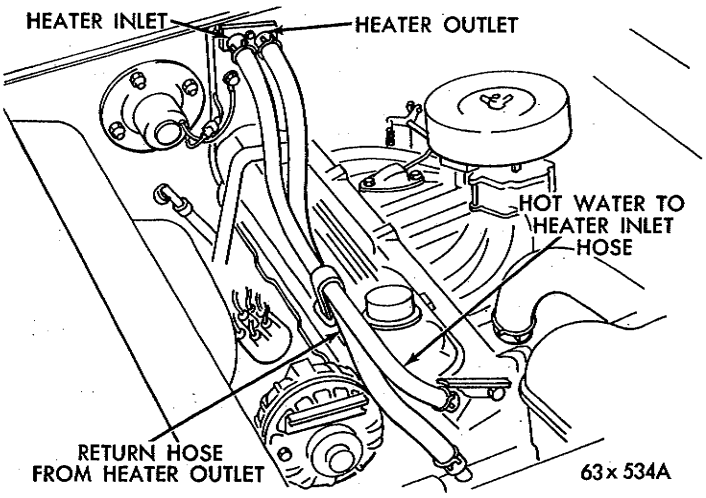


***Fig. 11—Heater Hose Connections—170 and 225 Cu. In. Engines—Valiant and Barracuda Models***

(10) Test operation of heater assembly.

### Disassembly—All Models

(1) Remove heater as outlined in "Heater Removal." Remove seal from around heater motor mounting studs.

(2) Remove spring clips holding spacers and heater motor to heater housing.

(3) Remove fan from heater motor.

(4) Remove mounting support plate from heater motor.

(5) Remove heater motor resistor assembly from heater housing (Fig. 3).

(6) Remove fresh air door seal from either inner or outer heating housing half only.

(7) Remove retainer clips attaching heater housing halves together.

(8) Separate heater housing halves.

(9) Remove screw attaching seal retainer and seal around heater core tubes.

(10) Remove heater core tube support clamp.

(11) Remove screws attaching heater core to heater housing and remove core.

(12) Remove seal retainer and seal from heater core.

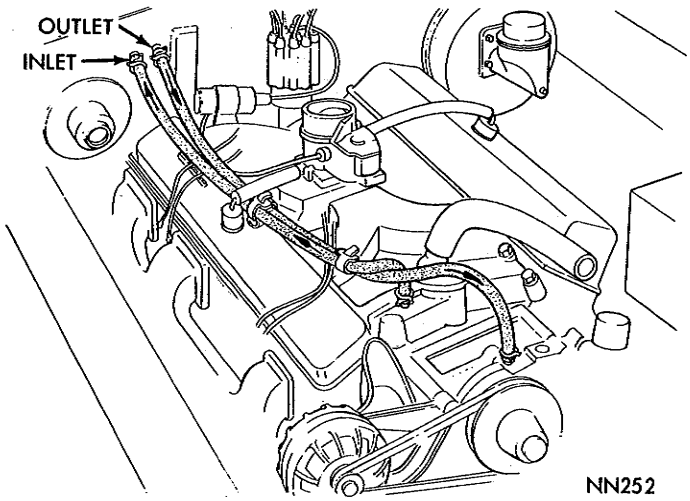


***Fig. 12—Heater Hose Connections—273 Cu. In. Engine—Valiant and Barracuda Models***

### Assembly—All Models

(1) Position heater core in heater housing.

(2) Slide seal retainer and seal over heater core tubes and up against housing. Install attaching screw.

(3) Install heater core to housing screws.

(4) Position support clamp over heater core tubes and install attaching screw.

(5) Install support plate on heater motor.

(6) Install fan on heater motor. Turn fan to make certain it does not hit motor support plate.

(7) Position heater motor and support plate over mounting studs on heater housing.

(8) install spacers and retainers on heater motor mounting studs.

(9) Position both housing halves together and install retainer spring clips. Add sealer between two halves before reassembly.

(10) Install heater motor resistor assembly.

(11) Position and cement seal around fresh air door opening.

(12) Position heater housing to dash panel seal around heater housing mounting studs.

(13) Install heater as outlined in "Heater Installation."

### Rear Window Defroster—All Models

To service the blower motor or fan, the assembly must be removed from the shelf panel from inside the luggage compartment. On Barracuda models, the assembly is mounted on the right rear trim panel and is accessible by reaching around the security panel in the luggage compartment.

After disconnecting the outlet hose and wire connector, remove the three mounting screws from the mounting clips and remove the assembly from the vehicle for service.

### Disassembly

(1) Remove the three blower motor adapter plate to housing mounting screws and withdraw motor and fan assembly from housing.

(2) Loosen fan set screw on fan hub and slide fan from motor shaft.

(3) Remove the two motor adapter plate mounting nuts and separate motor from plate.

### Assembly

(1) Position adapter plate on motor studs and install the two mounting nuts.

(2) Install fan on motor shaft and insert assembly in housing. Check fan to housing clearance and adjust if necessary.

(3) Install the three blower motor adapter plate to housing mounting screws.

MyMopar.com

# RADIO AND ANTENNA

## INDEX


| | Page | | Page |
|---|---|---|---|
| Adjustments | 14 | Reverberator | 13 |
| Antennas | 15 | Service Diagnosis | 13 |
| General Information | 13 | Speakers | 18 |
| Radios | 16 | | |


## GENERAL INFORMATION

Available as optional equipment in Valiant and Barracuda models is AM radio, Model 228 only. Radio Model 230 is available on Belvedere and Satellite. On Fury models AM radio Model 231 and AM-FM radio Model 361 are offered.

The manufacturers of the radios and reverberators make repair service available through their authorized service depots. If a schematic wiring diagram is desired, it should be obtained from the manufacturer of the particular unit.

## AM-FM RADIO (If So Equipped)

The AM-FM radio allows reception of both AM-FM broadcast frequencies. To select AM or FM reception, rotate the selector control located behind the manual tuning control to the desired position. The tuning knob and the On-Off and Volume control knob operate in the same manner as the standard AM radio.

The radio may be equipped, as optional equipment, with a rear seat speaker. A radio reverberator which operates in conjunction with the rear seat speaker is also available as an option.

## RADIO REVERBERATOR

The radio reverberator is used to produce a time delay of .025 to .030 seconds in the radio output to the rear seat speaker. The "echo" produced gives the effect of "concert hall" reproduction in the vehicle.

The reverberator package consists of the reverberator unit, the instrument panel switch and the wiring from the switch to the reverberator unit. The reverberator is an independently powered unit and has its voltage supply separate from the voltage supply to the radio.

## FADER CONTROL

This control is used only when the vehicle is equipped with a rear seat speaker. Full counterclockwise position allows operation of the front speaker. Full clockwise position allows operation of the rear seat speaker. Rotation between either position provides the desired blend of the two speakers.

If the vehicle is equipped with a reverberator, the reverberator control on the instrument panel replaces the fader control. Pull the reverberator control "OUT" to turn "ON" the reverberator unit and push "IN" to turn "OFF." In the "OFF" position, the reverberator control provides normal fader control.

## SERVICE DIAGNOSIS

| Condition | Possible Cause | Correction |
|---|---|---|
| **RADIO IS INOPERATIVE** | (a) Blown fuse. | (a) Replace the fuse. |
| | (b) Broken, loose or shorted antenna lead-in. | (b) Test with an auxiliary antenna and replace lead-in if necessary. |
| | (c) Loose battery cable. | (c) Test the voltage at the fuse and tighten all connections. |
| | (d) Faulty radio. | (d) Send radio to authorized repair service station for repair. |
| | (e) Faulty speaker. | (e) Replace the speaker. |
| | (f) Faulty antenna. | (f) Test the antenna and repair. |
| **RADIO RECEPTION IS WEAK** | (a) Unbalanced antenna trimmer. | (a) Adjust the antenna trimmer. |
| | (b) Loose antenna lead-in. | (b) Tighten the antenna lead-in. |
| | (c) Shorted antenna lead-in. | (c) Test with an auxiliary antenna and replace lead-in if necessary. |
| | (d) Faulty radio. | (d) Send radio to authorized repair service station for repair. |
| | (e) Faulty antenna. | (e) Test the antenna and correct. |
| **RADIO RECEPTION IS NOISY (Engine Running)** | (a) Outside electrical interferences. | (a) Move the car or eliminate interference. |
| | (b) Insufficient or faulty radio capacitors. | (b) Install capacitors in ignition system. |

MyMopar.com

| Condition | Possible Cause | Correction |
|---|---|---|
| **RADIO RECEPTION IS NOISY (Vehicle in Motion)** | (a) Static built up in tires. | (a) Ground the tires to the wheels with powdered graphite. |
| | (b) Loose antenna or lead-in wire. | (b) Tighten the antenna attaching nut. Inspect the fit of the antenna lead-in plug in the socket. |
| **RADIO IS NOISY WHEN EQUIPMENT IS OPERATED** | (a) Loose antenna ground. | (a) Clean and tighten the antenna connections. |
| **RADIO RECEPTION IS DISTORTED** | (a) Speaker coil rubbing on voice cone. | (a) Install an auxiliary speaker and compare. Replace if improved. |
| | (b) Torn speaker cone. | (b) Replace the speaker. |
| | (c) Faulty radio. | (c) Send radio to authorized radio service station for repair. |
| | (d) Foreign material in speaker. | (d) Clean or replace speaker. |
| **INTERMITTENT RECEPTION** | (a) Broken or shorted antenna lead-in wire. | (a) Test with a substitute antenna. Repair or replace lead-in wire. |
| | (b) Ground lead-in wire. | (b) Test with a substitute antenna. Repair the lead-in wire or replace. |
| | (c) Faulty radio. | (c) Send radio to authorized radio service station for repair. |

## ADJUSTMENTS

### *Antenna Trimming*

All radios are trimmed at the factory and should require no further trimmer adjustment. However, whenever a radio is being installed after repair, or if verification of trimmer adjustment is desired, proceed as follows:

(1) Operate radio for 15 minutes.

(2) Extend antenna to 40 inches.

(3) Manually tune radio to noise or weak signal between 1400 and 16 K.C.

(4) Increase radio volume to full volume and tone control to maximum treble (fully clockwise).

(5) Remove right radio control knobs for access to trimmer control (Figs. 1, 2 and 3).

Adjust antenna trimmer by carefully turning back and forth until position is found that gives peak response in volume. Maximum output indicates proper point of antenna trimmer adjustment.

### *Push Button*

(1) Extend antenna fully and turn radio on for fifteen minutes.

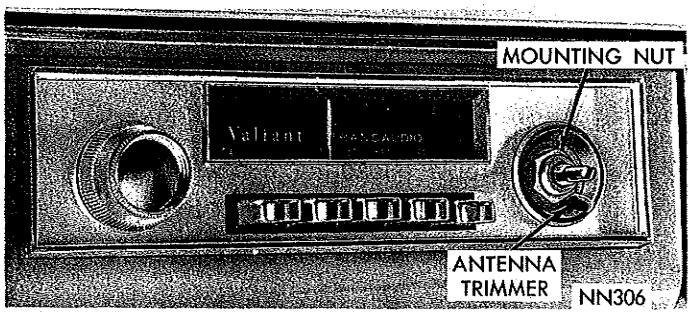


*Fig. 1—Antenna Trimmer-Valiant & Barracuda Models*

(2) Unlock push button by pulling out.

(3) Manually tune in desired station and relock push button by pushing all the way in.

(4) Repeat operation on other push buttons as necessary.

(5) Relock push button by pushing all the way in toward front of vehicle.

The radio push button adjustment is the same as standard AM radio. It should be noted that push button adjustment is only good for one station either (AM or FM) not both at the same time.

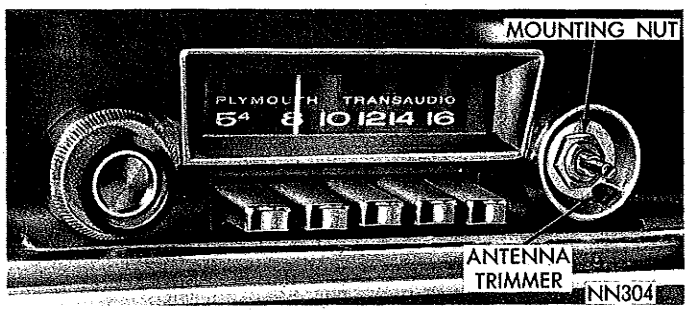


*Fig. 2—Antenna Trimmer-Belvedere & Satellite Model*

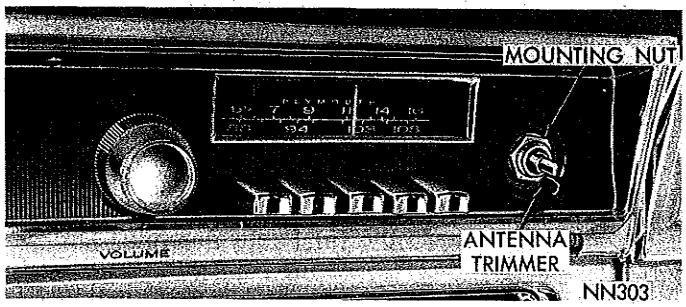


*Fig. 3—Antenna Trimmer—Fury Models*

MyMopar.com

## INTERFERENCE ELIMINATION

When installing any suppression item, make certain that all paint and dirt is removed from the grounding area between the capacitors and the engine or body components. Tighten all nuts and bolts securely.

The high tension circuit of the engine ignition system uses radio resistance wire as standard equipment. The balance of the suppression equipment is installed as follows:

Install the ignition coil capacitor, (Fig. 4).

**The alternator is equipped with an internal capacitor which is integral with the output stud.**

A capacitor is installed on the back of the instrument panel with a self tapping metal screw. The lead wire is connected to the input terminal of the voltage limiter on Valiant, Belvedere and Satellite models. On Barracuda and Fury models equipped with the voltage limiter integral with the fuel gauge, the lead wire is connected to the input terminal of the fuel gauge.

## ANTENNAS

### *Removal*

(1) Unplug antenna lead from radio receiver.

(2) On Fury models, use Tool C-3977 to remove antenna cap nut. Remove upper adapter and gasket. On Valiant, Barracuda, Belvedere and Satellite models, use a 7/8" open end wrench to remove cap nut.

(3) On Fury models, lower antenna into fender just far enough to grasp lower adapter under fender from inside engine compartment. Tip adapter and withdraw assembly through top of fender. The antenna is removed through front door opening from under fender on Valiant, Barracuda, Belvedere and Satellite models.

### *Installation*

(1) On Fury models, slide spacer (tangs up) and lower adapter over top of antenna mast. Tip lower adapter on mast and insert assembly into mounting hole from top of fender. On Valiant, Barracuda, Belvedere and Satellite models, the lower adapter and antenna mast is installed through front door opening from under fender.

(2) On Fury models, index tangs of spacer in lower adapter, install gasket, upper adapter (with locating pins in small holes in fender) and cap nut. Tighten cap nut with Tool C-3977. On Valiant, Barracuda, Belvedere and Satellite models, locate the two locating lugs on lower adapter in small holes in fender. Slide gasket, upper adapter and cap nut over top of antenna mast. Tighten cap nut with 7/8" open end wrench (Figs. 5 and 6).

(3) Route antenna lead through bulkhead and up behind fresh air duct hose to radio receiver on Fury models. On Valiant, Barracuda, Belvedere and Satellite models, antenna lead is routed through cowl side panel and over top of glove box to radio receiver

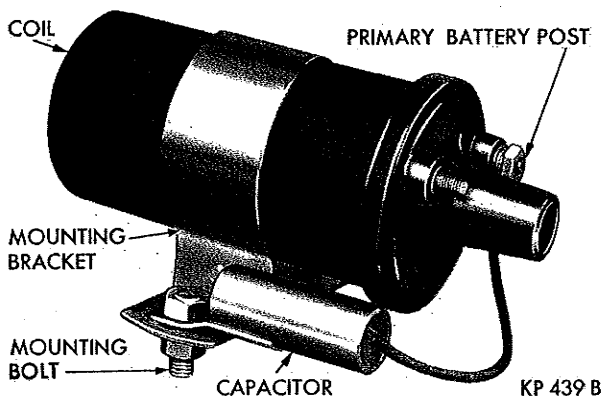


*Fig. 4—Ignition Coil Capacitor*

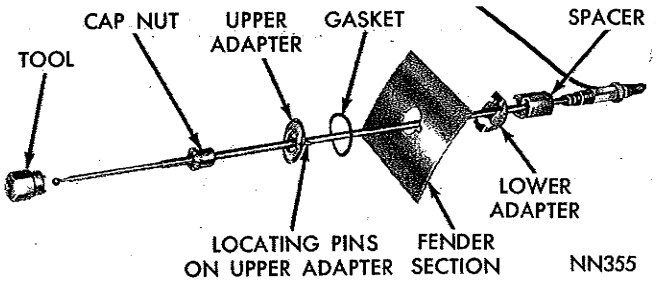


*Fig. 5—Antenna—Disassembled View—Fury Models*

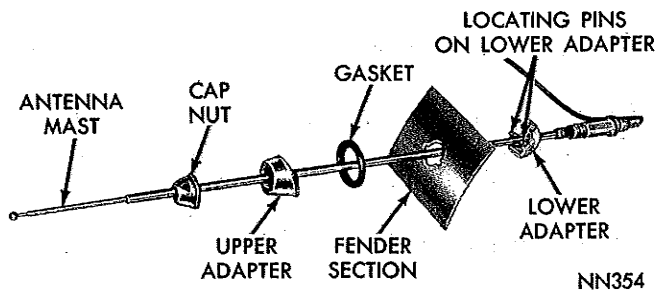


*Fig. 6—Antenna—Disassembled View—All Except Fury Models*

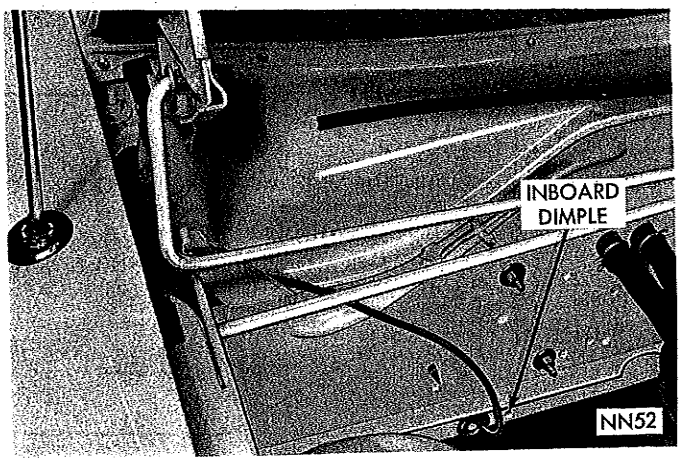


*Fig. 7—Antenna Lead Cable Routing—Fury Models*

MyMopar.com

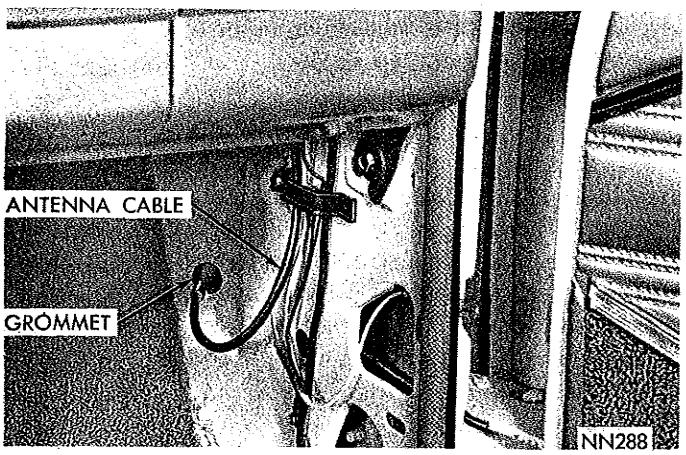


*Fig. 8—Antenna Lead Cable Routing—All Except Fury Models*

(Figs. 7 and 8).

### Initial Antenna Installation—All Except Fury Models

(1) See Figures 9 and 10 for proper location of antenna mounting hole.

(2) Locate position of the three holes. **Drill the two 3/16" holes first. Drill the 1⅛" hole last.**

(3) Remove the right cowl kick pad.

(4) Locate and drill ¾" hole in cowl panel dimple (Fig. 8).

(5) Position lower adapter on antenna mast and insert assembly through front door opening from under fender.

(6) Index lower adapter locating lugs in small holes in fender (Fig. 12). Install gasket, upper adapter and cap nut. Tighten cap nut with ⅞" open end wrench.

(7) Tape a light gauge flexible wire to antenna cable as an aid in guiding cable through hole in cowl panel.

(8) Route antenna cable up right side of cowl panel, over top of glove box and plug into radio receiver (Fig. 8).

(9) Test operation of radio.

### Initial Antenna Installation—Fury Models

(1) See Figure 11 for proper location of antenna mounting holes. Make template of heavy paper.

(2) After locating template on fender, center punch and drill the 3/16" holes **first** and the 1⅛" holes last.

(3) Raise carpet inside car and drill a ¾" hole in outboard dimple on floor pan. This dimple can easily be located from inside engine compartment. There are two dimples on the floor pan below the flange and to the right of engine. Use outboard dimple for antenna lead (Fig. 7).

(4) Slide spacer and lower adapter over top of antenna mast and insert antenna lead and antenna into hole from top side of fender. Tip lower adapter on mast to permit adapter to slide through mounting hole.

(5) Position lower adapter on tangs of spacer and install gasket and upper adapter over top of antenna. Index upper adapter locating pins in two 3/16" holes in fender. Lubricate cap nut threads and tighten with Tool C-3977 (Fig 5).

(6) Insert antenna lead through ¾" hole in floor pan and snap grommet in place. Route antenna lead over fresh air duct. This can be done by disconnecting alligator clip on hose, pushing hose to right and leading antenna through opening.

(7) Connect antenna lead to radio receiver.

## RADIOS

**Caution: Do not operate the radio with speaker leads detached since damage to the transistors may result.**

### Removal—Valiant and Barracuda

(1) Disconnect battery ground cable.

(2) Remove control knobs from front of radio.

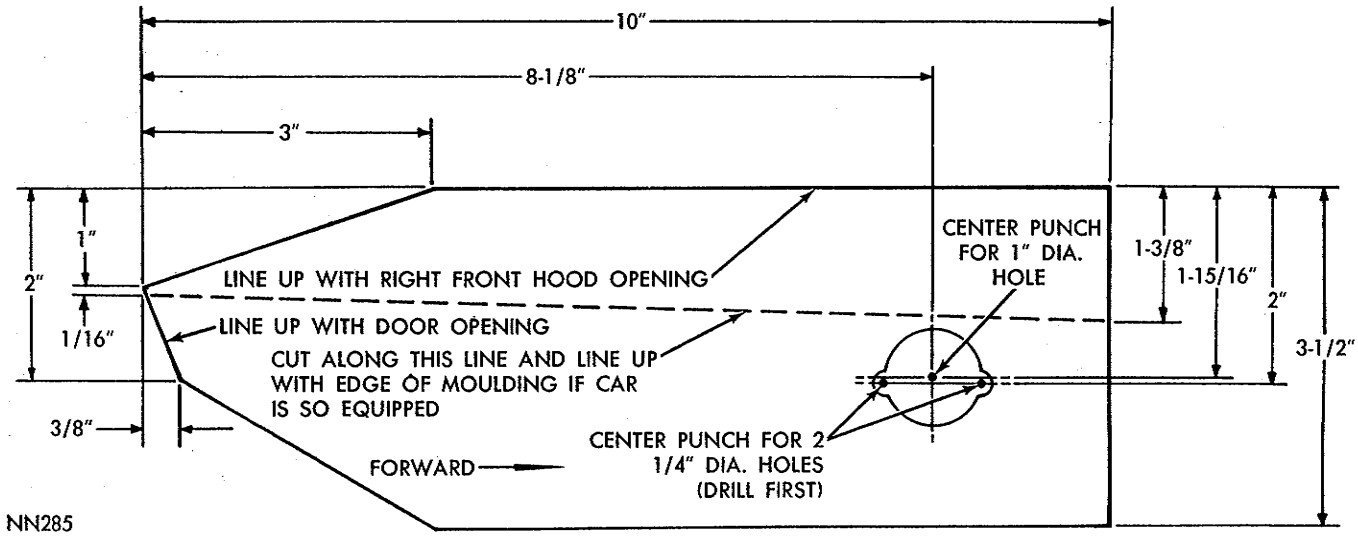


*Fig. 9—Antenna Mounting Template—Valiant & Barracuda Models*

MyMopar.com

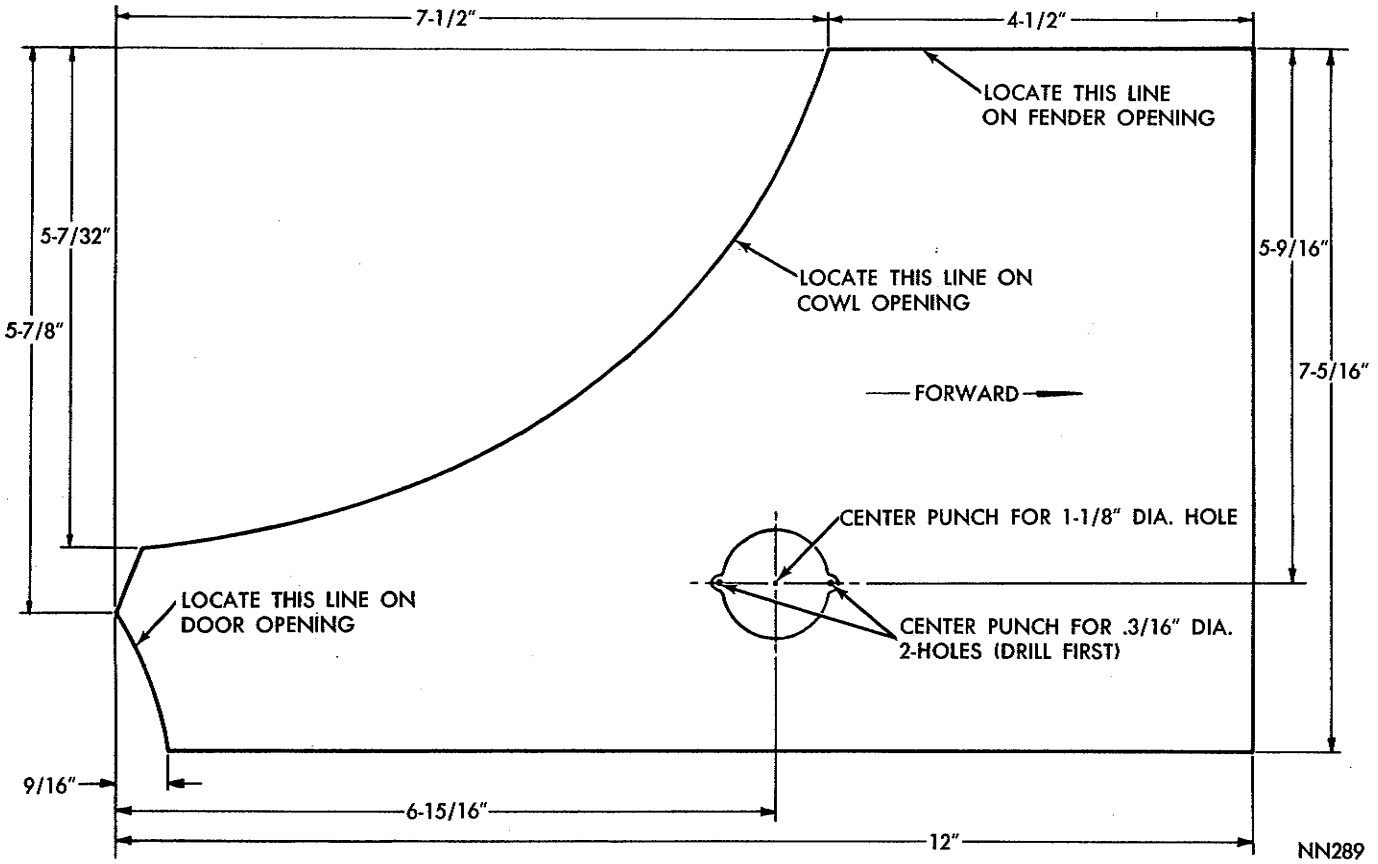


***Fig. 10—Antenna Mounting Template—Belvedere & Sattellite Models***

(3) Remove bottom screw from radio mounting bracket.
(4) Remove left defroster tube.
(5) Loosen top screw on radio mounting bracket and remove bracket.
(6) Disconnect speaker and antenna leads.
(7) Remove mounting nuts from front of radio.
(8) Remove radio bezel.
(9) Lower radio and disconnect radio power feed cable.
(10) Remove radio from under instrument panel.

### Installation

(1) Position radio under instrument panel and connect radio power feed cable.
(2) Position radio into instrument panel.
(3) Install radio bezel.
(4) Install mounting nuts on front of radio.
(5) Connect speaker and antenna leads.
(6) Install radio mounting bracker. Tighten screws securely.
(7) Connect left defroster tube.
(8) Install control knobs on radio.
(9) Connect battery ground cable and test operation of radio.

### Removal—Belvedere

(1) Disconnect battery ground cable.
(2) If air conditioning equipped, remove spot cooler hoses and distribution duct.
(3) Remove control knobs, two mounting nuts and bezel.
(4) From under panel, disconnect speaker, power and antenna leads.
(5) Remove support bracket and radio from under panel.

### Installation

(1) From under panel, position radio in panel opening and install bezel and two mounting nuts.
(2) Install support bracket, connect speaker, power and antenna leads.
(3) Install control knobs and if air conditioning equipped, the distribution ducts and spot cooler hoses.
(4) Connect battery ground cable and test radio operation.

### Removal—Fury

(1) Disconnect battery ground cable.
(2) Remove control knobs and two mounting nuts.
(3) If air conditioning equipped, remove transition duct and two spot cooler hoses before disconnecting speaker, power supply and antenna leads.
(4) Remove radio support bracket. Rotate front end of radio down and remove radio from under panel.

MyMopar.com

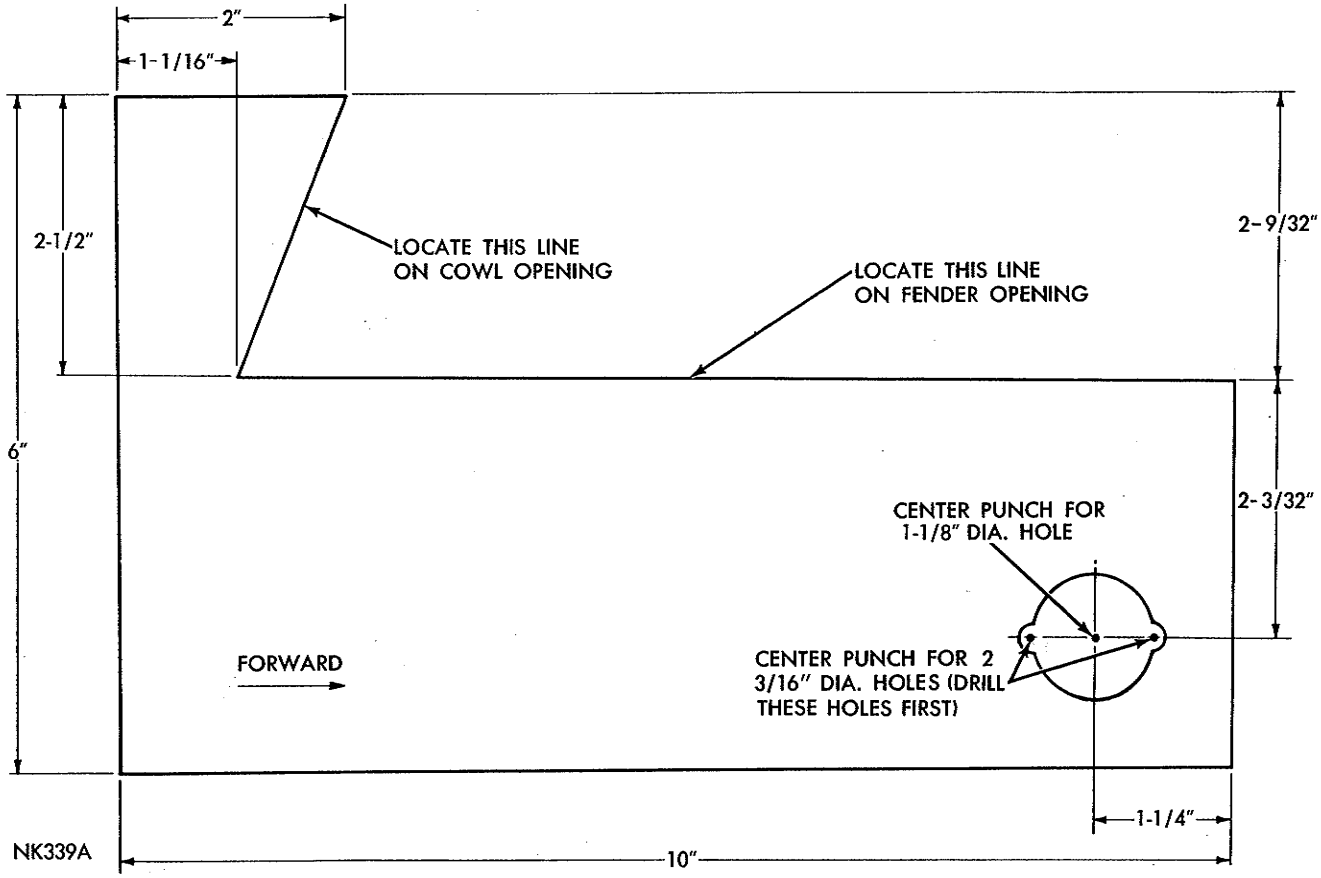


***Fig. 11—Antenna Mounting Template—Fury Models***

### *Installation*

(1) Insert radio into opening, dial end up, in a rotating motion. Position in panel opening and install support bracket.

(2) Connect antenna, power supply and speaker leads and if air conditioning equipped install transition duct and two spot cooler hoses.

(3) Install two mounting nuts and control knobs.

(4) Connect battery ground cable and test operation of radio.

## RADIO SPEAKER

### *Front Speaker Removal—Valiant Models*

(1) Disconnect battery ground cable.

(2) Remove heater control knobs.

(3) Remove heater control bezel.

(4) Remove heater control mounting plate attaching screws.

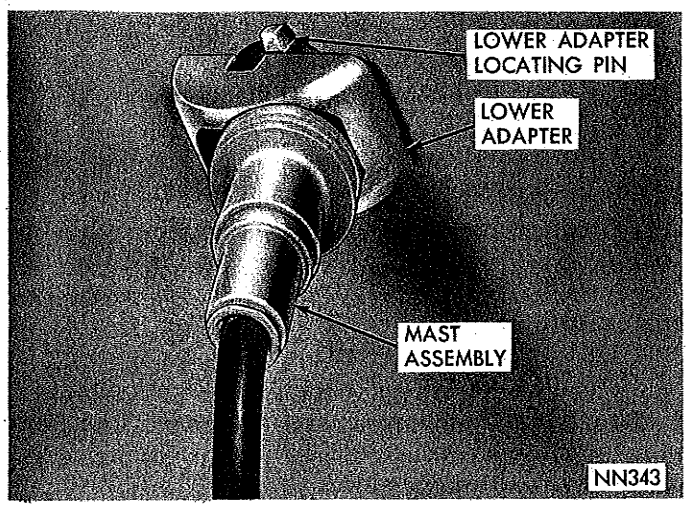


***Fig. 12—Antenna Assembled—Underside View—All Except Fury Models***

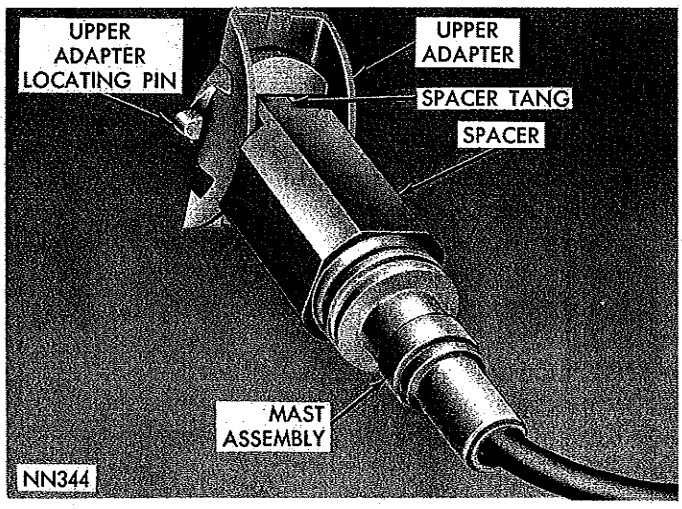


***Fig. 13—Antenna Assembled—Underside View—Fury Models***

MyMopar.com

(5) From under instrument panel move heater controls to provide clearance for access to speaker.
(6) Disconnect speaker leads.
(7) Remove the two screws that mount speaker mounting plate to instrument panel.
(8) Remove speaker from under instrument panel.

### Installation

(1) From under instrument panel position speaker and mounting plate on two studs on instrument panel and install the two mounting nuts.
(2) Connect speaker leads.
(3) Position heater controls in instrument panel opening and install mounting screws.
(4) Install heater control bezel.
(5) Install heater control knobs.
(6) Connect battery ground cable.

### Front Speaker Removal—Barracuda Model

(1) Remove radio. (See Radio Removal.)
(2) Disconnect speaker leads and remove two nuts from speaker mounting studs.
(3) Remove speaker from left side of heater control cables.

### Installation

(1) Position speaker on mounting studs and secure with two mounting nuts.
(2) Connect speaker leads.
(3) Install radio. (See Radio Installation.)

### Front Speaker Removal—Belvedere and Satellite Models

(1) Disconnect battery ground cable.
(2) Remove radio. (See Radio Removal.)
(3) If car is air conditioning equipped, remove center spot cooler hose at distribution duct. From under panel, disconnect speaker leads, remove the four mounting nuts and remove speaker.

### Installation

(1) From under panel, position speaker on mounting studs and secure the four nuts.
(2) Connect speaker leads and air conditioning hose if so equipped.
(3) Install radio. (See Radio Installation).
(4) Connect battery ground cable and test operation of radio.

### Front Speaker Removal—Fury Models

(1) Disconnect battery ground cable and remove radio. (See radio removal.)
(2) Remove ash receiver and housing.
(3) Remove four nuts from speaker mounting nuts. (The left rear nut is accessible through ash receiver housing opening.)
(4) Carefully remove speaker from under panel.

### Installation

(1) Carefully position speaker, from under panel, on the four mounting studs.
(2) Hold speaker in place with one hand through radio opening and install the four nuts with the other hand.
(3) Tighten four nuts, being careful not to distort radio grille.
(4) Install radio. (See radio installation.)
(5) Connect battery ground cable and test operation of radio.

### Rear Seat Speaker—All Models

### Removal

(1) Remove spare tire.
(2) Disconnect speaker leads. Remove the 4 sheet metal screws holding speaker to shelf panel.

### Installation

(1) Position speaker under shelf panel and install 4 mounting screws. Connect speaker leads.
(2) Install spare tire and test operation of speaker.

### Reverberator

Figure 14 shows the switch and wiring installation at the radio.

The reverberator is mounted to the left of the rear seat speaker under the shelf panel. To service the reverberator, remove the spare tire disconnect the speaker and power leads. Remove the two mounting screws and remove from the vehicle.

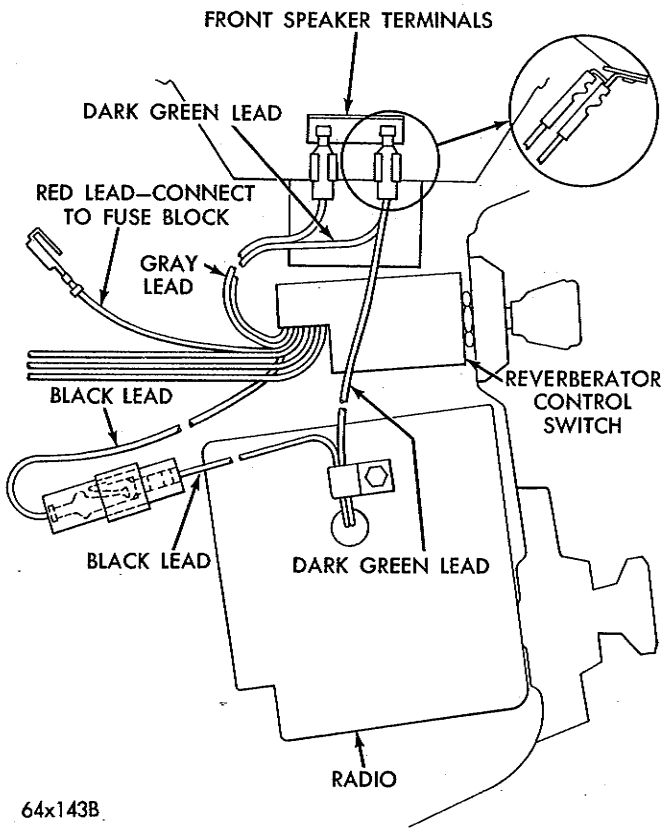


*Fig. 14—Reverberator Wire Harness (at Instrument Panel)*

MyMopar.com

# WINDSHIELD WASHERS

## GENERAL INFORMATION

The windshield washers are operated by an electric motor driven pump to which fluid is gravity fed from a plastic reservoir (Fig. 1). The motor is operated by depressing the windshield wiper knob.

The pump assembly is located in the engine compartment below the plastic reservoir. A permanently lubricated sealed motor is coupled to a gear type pump. Jets mounted in the fresh air intake grille of the cowl ventilator distribute fluid, routed through rubber hoses, to the windshield. A self resetting circuit breaker mounted inside the pump will reset after a period of two minutes in the event of a frozen pump. The circuit breaker is a serviceable item but the pump and motor are serviced as an assembly only.

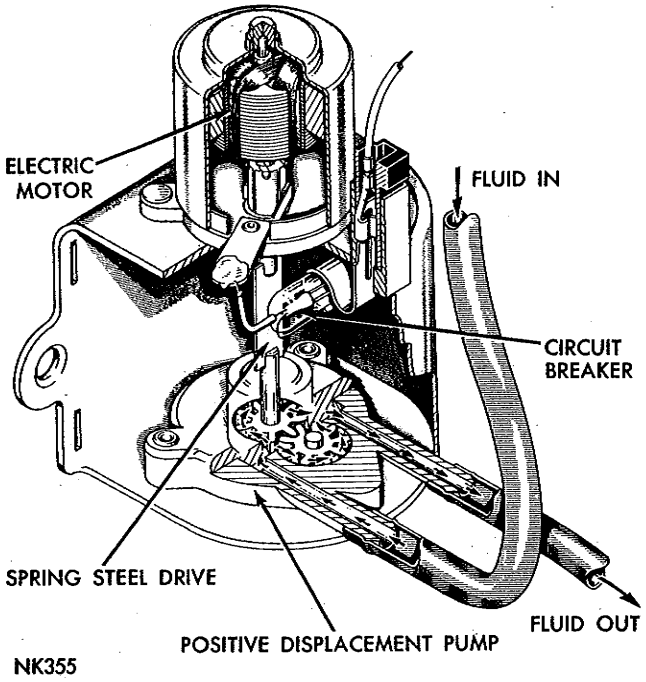


*Fig. 1—Washer Motor and Pump Assembly*

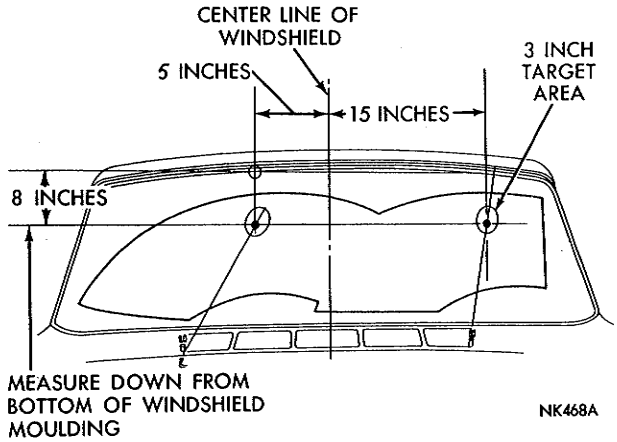


*Fig. 2—Washer Aiming Diagram—Valiant and Barracuda Models*

## SERVICE DIAGNOSIS

| Condition | Possible Cause | Correction |
|---|---|---|
| **INTERMITTENT OPERATION OF SYSTEM** | (a) Faulty circuit breaker. | (a) Replace circuit breaker. |
| | (b) Loose wiring connections. | (b) Repair as necessary. |
| **PUMP INOPERATIVE MOTOR RUNS** | (a) Nozzle jets plugged. | (a) Clean nozzle jets. |
| | (b) Broken or loose hose. | (b) Replace hose. |
| | (c) Broken coupling. | (c) Replace motor and pump assembly. |
| | (d) Faulty pump. | (d) Replace motor and pump assembly. |
| | (e) Nozzle jet under air intake grille. | (e) Adjust nozzles. |
| **PUMP ASSEMBLY INOPERATIVE** | (a) Loose wiring terminals. | (a) Tighten the terminals. |
| | (b) Corroded terminals. | (b) Clean and tighten the terminals. |
| | (c) Broken wires. | (c) Repair or replace the wires. |
| | (d) Faulty switch. | (d) Replace the wiper switch assembly. |
| | (e) Faulty motor. | (e) Replace the motor and pump assembly. |
| | (f) Poor ground. | (f) Clean the pump housing and tighten the mounting screws. |
| | (g) Faulty circuit breaker. | (g) Replace the circuit breaker. |

## ADJUSTMENTS

### NOZZLE ADJUSTMENT

A slot is provided in the nozzle mounting bracket to compensate for lateral adjustment. Loosen the mounting screw and move nozzle for clearance between the air intake grille louvres.

Vertical adjustment on Valiant, Barracuda and Fury models is made by inserting a small screw driver between the grille louvres and bending the nozzle up or down. On Belvedere and Satellite models, vertical adjustment is accomplished by inserting a screw

MyMopar.com

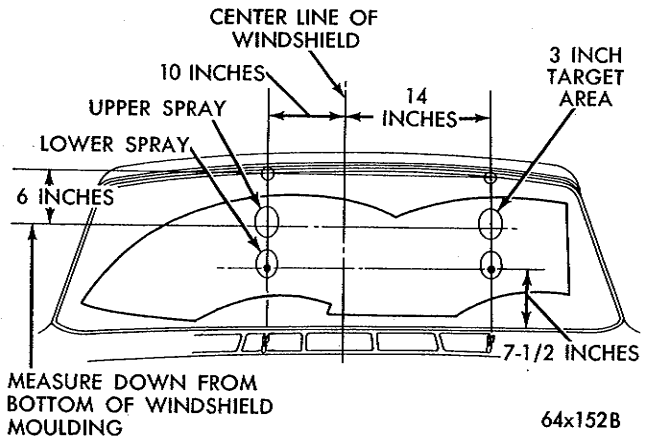


*Fig. 3—Washer Aiming Diagram—Belvedere and Satellite Models*

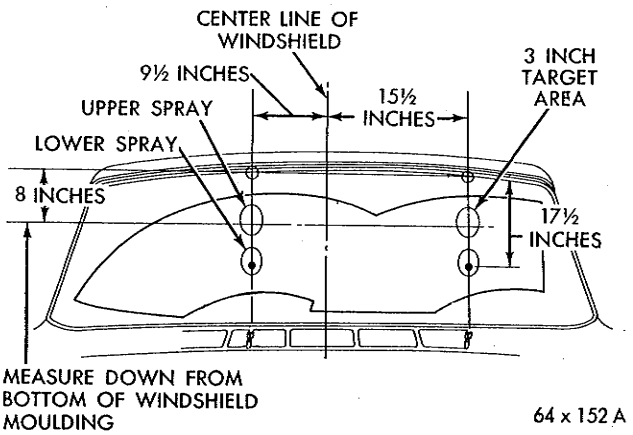


*Fig. 4—Washer Aiming Diagram—Fury Models*

driver in the slotted portion of the nozzle bracket and bending the bracket up or down.

**Adjust nozzles so that the centers of the streams contact the windshield glass as shown in Figures 2, 3 and 4. The oval pattern formed by the stream striking the windshield glass is not "centered" on the center of the stream. The stream center is toward the bottom of the oval pattern.**

### *Pump Circuit Breaker Replacement*

(1) Empty reservoir.
(2) Disconnect hoses from pump.
(3) Disconnect wire terminal.
(4) Remove pump assembly from vehicle.
(5) Lift up pump cover retaining tabs and remove cover.
(6) Unsolder circuit breaker lead from motor terminal.
(7) Remove circuit breaker and terminal from pump and motor bracket.
(8) Install new circuit breaker and terminal in slot in bracket. Press insulator firmly in place.
(9) Solder bare end of circuit breaker lead to motor terminal using rosin core solder.
(10) Install pump cover. Carefully bend retaining tabs in place.
(11) Install pump.
(12) Connect hoses to pump.
(13) Connect wiring terminal.
(14) Fill reservoir and test operation of washer system.

MyMopar.com



MyMopar.com

# FRONT SUSPENSION AND STEERING LINKAGE

## CONTENTS


| | Page | | Page |
|---|---|---|---|
| ALIGNMENT | 3 | SPECIFICATIONS | 12 |
| BALL JOINTS | 9 | STEERING ARM | 5 |
| CAMBER | 4 | STRUT | 9 |
| CASTER | 4 | SWAY BAR | 6 |
| CONTROL ARM | 8 | TOE-IN | 4 |
| HEIGHT ADJUSTMENT | 3 | TORSION BAR | 4 |
| PIVOT SHAFT — CONTROL ARM | 9 | WHEEL ALIGNMENT | 4 |


## GENERAL INFORMATION

The torsion bar rear anchors are integral with the engine rear support member and the front anchors, which are part of the lower control arms, provide the means of adjusting vehicle front height. The lower ball joints are integral with the steering arms. Compression type lower ball joints are used on all models.

All ball joints and the torsion bars at the front of the rear anchors are effectively sealed against road splash by tightly fitted balloon type flexible seals. The ball joints and tie rod ends are of the semi-permanent lubricated type.

**Lower ball joints, steering arm assemblies, should not be replaced for looseness if the axial end play (Up and Down movement) is under .050 inch. Looseness of this nature is not detrimental and will not affect front wheel alignment or vehicle stability.**

When lubrication of the ball joints and tie rod end assemblies is required, remove the plugs and install a lubrication fitting. After the lubrication is completed reinstall the plugs.

**Service replacement ball joints are equipped with a "Knock-Off" type lubrication fitting. After lubricating, knock off that portion of the fitting over which the lubrication gun was installed. A ball check is installed in the remaining portion of the fitting to prevent foreign materials from passing through.**

The tie rod end seals and seal protectors are serviced separately and should be inspected for damage at all oil change periods.

Caster and camber adjustments are controlled by cams on the upper control arm pivot bolts.

**Rubber bushing should not be lubricated at any time.**

**ON MODELS EQUIPPED WITH DISC BRAKES, REFER TO GROUP 5 FOR BRAKE DRUM REMOVAL AND INSTALLATION PROCEDURES.**

## SERVICE DIAGNOSIS

| Condition | Possible Cause | Correction |
|---|---|---|
| FRONT END NOISE | (a) Ball joint needs lubrication. | (a) Lubricate ball joint. |
| | (b) Shock absorber inoperative or bushings worn. | (b) Replace bushings. |
| | (c) Worn strut bushings. | (c) Replace bushing. |
| | (d) Loose struts. | (d) Inspect bushings and tighten strut nuts. |
| | (e) Loose steering gear on frame. | (e) Tighten steering gear mounting bolts. |
| | (f) Worn upper control arm bushings. | (f) Replace worn bushings. |
| | (g) Worn lower control arm shaft bushings. | (g) Replace worn bushings. |
| | (h) Excessively worn upper ball joint. | (h) Replace ball joint. |
| | (i) Excessively worn lower ball joint. | (i) Replace ball joint. |
| | (j) Worn tie rod ends. | (j) Replace tie rod end. |
| | (k) Loose or worn front wheel bearings. | (k) Adjust or replace bearings as necessary. |
| | (l) Steering arm contacting the control arm or strut. | (l) Smooth off contacting areas and lubricate with a water resistant grease. |
| POOR DIRECTIONAL STABILITY | (a) Low or uneven tire pressure. | (a) Inflate tires to correct pressure. |
| | (b) Loose wheel bearings. | (b) Adjust wheel bearing. |
| | (c) Improper steering cross shaft adjustment. | (c) Adjust steering cross shaft. |
| | (d) Steering gear not centered. | (d) Adjust steering gear. |

MyMopar.com

| Condition | Possible Cause | Correction |
|---|---|---|
| | (e) Worn idler arm bushing. | (e) Replace bushing or idler arm as necessary. |
| | (f) Loose or failed front strut bushings. | (f) Replace bushings. |
| | (g) Weak or broken rear spring. | (g) Replace spring. |
| | (h) Incorrect front wheel alignment or suspension heights. | (h) Measure and adjust front wheel alignment and suspension heights. |
| | (i) Shock absorber inoperative. | (i) Replace shock absorber. |
| **HARD STEERING** | (a) Ball joints need lubrication. | (a) Lubricate ball joints. |
| | (b) Low or uneven tire pressure. | (b) Inflate tires to the recommended pressures. |
| | (c) Low power steering fluid level. | (c) Fill power steering pump reservoir to correct level. |
| | (d) Lack of assist of power steering system. | (d) Inspect and test power steering pump and gear. Service as required. |
| | (e) Low front suspension height. | (e) Adjust heights to specifications. |
| | (f) Incorrect front wheel alignment (Particularly caster) resulting from a bent control arm steering knuckle or steering knuckle arm. | (f) Replace bent parts and adjust front wheel alignment. |
| | (g) Steering gear not adjusted properly. | (g) Adjust steering gear. |
| | (h) Idler arm binding. | (h) Free-up idler arm. |
| **EXCESSIVE PLAY IN STEERING** | (a) Worn or loose front wheel bearings. | (a) Adjust or replace wheel bearings as necessary. |
| | (b) Incorrect steering gear adjustment. | (b) Adjust steering gear. |
| | (c) Loose steering gear to frame mounting bolts. | (c) Tighten steering gear to frame bolts. |
| | (d) Worn tie rod ends. | (d) Replace tie rods as necessary. |
| | (e) Worn steering gear parts. | (e) Replace worn steering gear parts and adjust steering gear as necessary. |
| | (f) Worn upper control arm ball joints. | (f) Replace ball joints. |
| | (g) Worn lower control arm ball joints. | (g) Replace ball joints. |
| | (h) Worn idler arm bushings. | (h) Replace bushing. |
| **FRONT WHEEL SHIMMY** | (a) Tire and wheel out of balance. | (a) Balance wheel and tire assembly. |
| | (b) Uneven tire wear, or excessively worn tires. | (b) Rotate or replace tires as necessary. |
| | (c) Worn or loose wheel bearings. | (c) Replace or adjust wheel bearings. |
| | (d) Worn tie rod ends. | (d) Replace tie rod ends. |
| | (e) Strut mounting bushings loose or worn. | (e) Replace strut mounting bushings. |
| | (f) Incorrect front wheel alignment and car height (particularly caster). | (f) Adjust front wheel alignment and car height. |
| | (g) Upper ball joints loose or excessively worn. | (g) Tighten to specifications or replace as necessary. |
| **VEHICLE PULLS TO ONE SIDE** | (a) Low or uneven tire pressure. | (a) Inflate tires to the recommended pressure. |
| | (b) Front brake dragging. | (b) Adjust brakes. |
| | (c) Grease, lubricant or brake fluid leaking onto brake lining. | (c) Replace brake shoe and lining as necessary and eliminate all leaks. |
| | (d) Loose strut bushings. | (d) Inspect bushings and replace as necessary. |
| | (e) Power steering control valve out of adjustment. | (e) Adjust steering gear control valve. |
| | (f) Incorrect front wheel alignment (particularly caster). | (f) Adjust front wheel alignment. |
| | (g) Broken or sagging front or rear spring. | (g) Replace spring. |
| | (h) Excessively worn suspension pivot bushings. | (h) Replace bushings. |

MyMopar.com

# SERVICE PROCEDURES

## PREPARATION FOR MEASURING WHEEL ALIGNMENT

Front wheel alignment is the mechanics of adjusting all the interrelated factors (Fig. 1) affecting the running and steering of the front wheels of the vehicles. Incorrect alignment of front wheels may result in hard steering, abnormal tire wear, or braking problems.

The method of measuring the alignment will vary depending on the type of equipment being used. The instructions furnished by the manufacturer of the equipment should always be followed, however, the specifications as recommended by the Chrysler Motors Corporation should always be used.

All inspections and adjustments should be made in the following order:

Front Suspension Height
Caster and Camber
Toe-In
Steering Axis Inclination
Toe-out On Turns

Measuring the steering axis inclination and toe-out on turns is valuable in determining if parts are bent or damaged particularly when adjustments will not bring camber and caster within specifications.

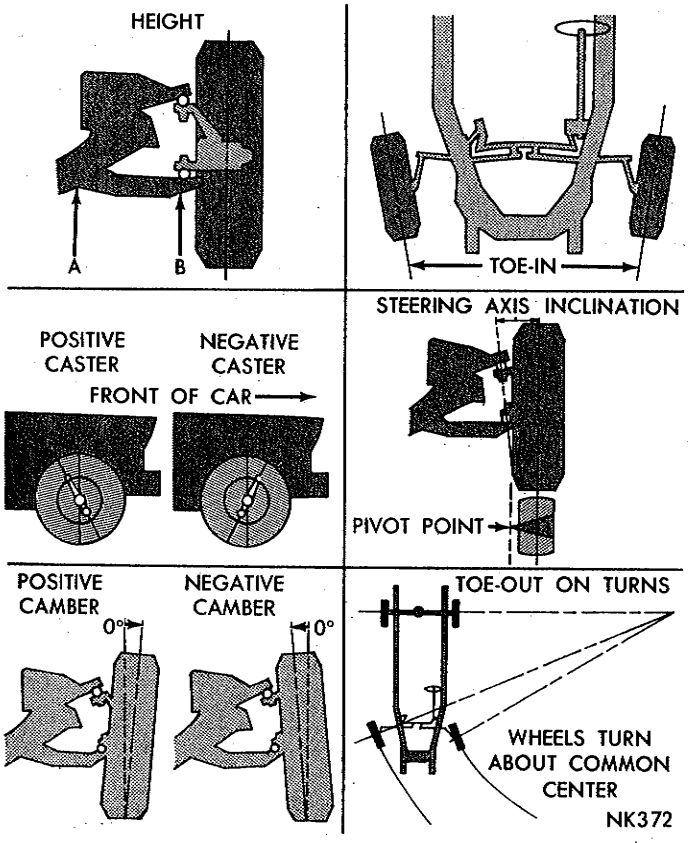


*Fig. 1—Wheel Alignment Factors*

**Do not attempt to modify any suspension or steering parts by heating or bending.**

Before any attempt is made to change or correct caster, camber and toe-in, the following inspections and necessary corrections must be made on those parts which influence the steering of the vehicles.

(1) Inflate tires to recommended pressure. All tires should be same size, in good condition and have equal wear. Note the type of wear to aid in diagnosing (Group 22).

(2) Inspect suspension and steering linkage pivot points for excessive looseness, rear springs for proper tightness of "U" bolts and height differential between left and right sides of vehicle. (The vehicle shall be on a level floor or alignment rack) and have a full fuel tank but no luggage or passenger load.

(3) Inspect front wheel bearing adjustment (Group 22). Measure front wheel and tire assembly runout (follow the Equipment Manufacturers Instructions).

(4) To obtain accurate readings, vehicle should be jounced in following manner just prior to taking each measurement (Height-Caster-Camber and Toe): Grasp bumpers at center (rear bumper first) and jounce up and down several times. Release bumpers on down cycle after jouncing both rear and front ends an equal number of times.

## HEIGHT ADJUSTMENT

Front suspension heights must be held to specifications for a satisfactory ride, correct appearance, proper front wheel alignment and reduced tire wear.

The heights should only be measured after the vehicle has the recommended tire pressures, a full tank of fuel, no passenger load and is on a level floor or alignment machine.

(1) Clean all foreign material from bottom of steering knuckle arm assemblies and from lowest area of the height adjusting blades directly below center of lower control arm inner pivots.

(2) Jounce vehicle several times releasing it on downward motion.

(3) Measure distance from lowest point of one adjusting **blade** to floor (Measurement A) and from lowest point of steering knuckle arm, on same side (Measurement B) to floor (Fig. 2). **Measure only one side at a time.**

(4) Refer to Specifications and adjust if necessary by turning torsion bar adjusting bolt clockwise to increase height and counterclockwise to decrease height.

(5) After each adjustment, jounce vehicle before remeasuring. Both sides should be measured even though only one side has been adjusted.

(6) Measure other side in same manner. The maximum allowable difference in suspension height from

MyMopar.com

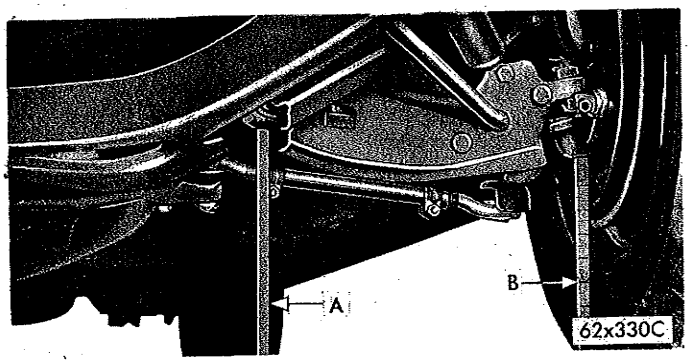


*Fig. 2—Measuring Front Suspension Height (Belvedere-Satellite)*

side to side is ⅛ inch on all Models.

## WHEEL ALIGNMENT

Front wheel alignment settings must be held to specifications to hold tire wear to a minimum and to maintain steering ease and handling of vehicle.

The equipment manufacturers recommended procedure should always be followed. Any parts of the front suspension system should be replaced if they are found to be bent. **Do not attempt to straighten any bent part.**

### *Camber and Caster*

Access holes to loosen upper control arm cam bolt nuts have been provided for in the fender side shields (Fig. 3) of the Belvedere-Satellite vehicles. The front access hole is made available by removing splash cover tapping screws and cover.

(1) Prepare vehicle for measuring wheel alignment.

(2) Remove all foreign material from exposed threads of cam adjusting bolts.

(3) Record initial camber and caster readings before loosening cam bolt nuts.

(4) Camber settings should be held as close as possible to the "preferred" setting. Caster should be held as nearly equal as possible on both wheels. Refer to specifications.

### *Toe-In*

The toe setting should be the final operation of the front wheel alignment adjustments. The front wheels must be in a straight ahead position. Follow the equipment manufacturers procedure. The steering wheel should also be centered during this operation.

Turning the tie rod sleeve will "center" the steering wheel spokes. If the steering wheel was centered, make the toe-in adjustment by turning both sleeves an equal amount.

Tighten adjusting sleeve clamp bolt nuts 15 foot-pounds. **Make sure clamp bolt nuts are on the bottom.**

## TORSION BAR

The torsion bars are **not** interchangeable side for side. The bars are marked either right or left by an "R" or an "L" stamped on one end of the bar.

### *Removal*

(1) Remove upper control arm rebound bumper.

(2) If vehicle is to be raised on a hoist, make sure it is lifted on body only so that front suspension is in full rebound (under no load). If vehicle is to be raised on jacks, placed under center of crossmember **it will be necessary that, a support first be placed between the crossmember and the [illegible]ck.**

(3) Release all load from torsion bar (Fig. 4) by turning anchor adjusting bolt (Fig. 5) counterclockwise.

(4) Remove lock ring and plug from torsion bar rear anchor (Fig. 4).

(5) Using Tool C-3728, remove torsion bar (Fig. 5) from its anchors. It is advisable to place Tool C-3728 toward rear of torsion bar to allow sufficient room for striking the striking pad of tool. **Do not apply heat to torsion bar, front anchor or rear anchor.**

(6) Remove tool and slide rear anchor balloon seal from anchor to facilitate removal of torsion bar.

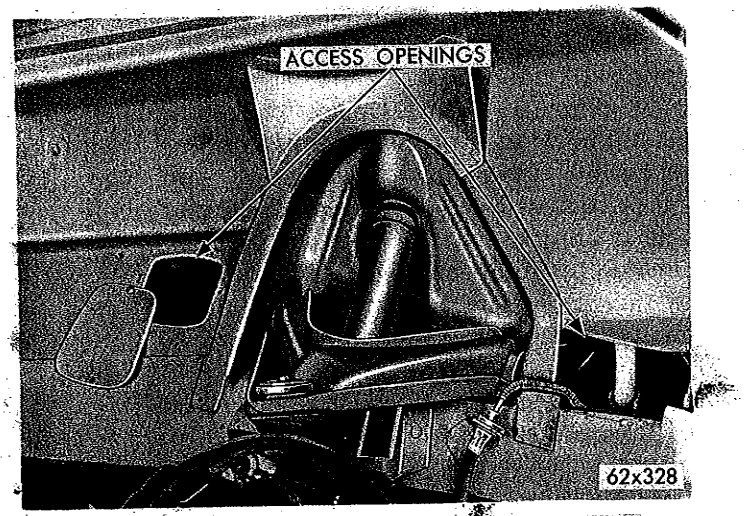


*Fig. 3—Access Opening in Fender Shield*

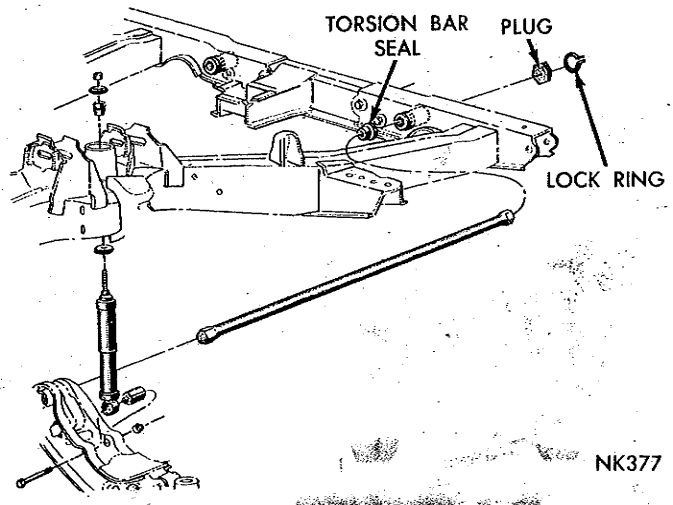


*Fig. 4—Torsion Bar (Fury)*

MyMopar.com

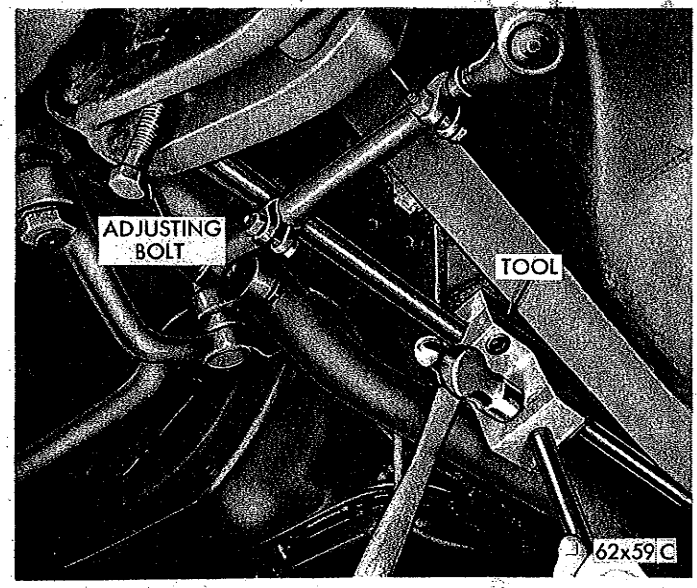


*Fig. 5—Removing Torsion Bar*

(7) Remove torsion bar by sliding bar out through rear of anchor. Use care not to damage balloon seal when it is removed from torsion bar.

### *Inspection*

(1) Inspect balloom seal for damage and replace if necessary.

(2) Inspect torsion bar for scores and nicks. Dress down all scratches and nicks to remove sharp edges, then paint repaired area with a good rust preventative.

(3) Remove all foreign material from hex openings in anchors and from hex ends of torsion bars.

(4) Inspect adjusting bolt and swivel for corrosion or other damage and if necessary replace. Lubricate for easy operation.

### *Installation*

(1) Insert torsion bar through rear anchor.

(2) Slide balloon seal over torsion bar (cupped end toward rear of bar).

(3) Coat both hex ends of torsion bar with Multi-Mileage Lubricant.

(4) Slide torsion bar into hex opening of lower control arm.

(5) Install plug and lock ring in rear anchor.

(6) Pack the annular opening in rear anchor completely full of Multi-Mileage Lubricant.

(7) Position balloon seal on rear anchor so lip of seal engages with groove in anchor.

(8) Turn adjusting bolt clockwise to place a load on torsion bar.

(9) Lower vehicle to floor and adjust front suspension height.

(10) Install upper control arm rebound bumper and tighten nut 200 inch-pounds.

## STEERING KNUCKLES

**ON MODELS EQUIPPED WITH DISC BRAKES, REFER TO GROUP 5 FOR BRAKE DRUM REMOVAL AND INSTALLATION PROCEDURES.**

### *Removal*

(1) Remove upper control arm rebound bumper.

(2) Raise vehicle so front suspension is in full rebound (under no load).

(3) Remove wheel, tire and drum as an assembly.

(4) Remove all load from torsion bar by turning adjusting bolt clockwise.

(5) Remove upper ball joint stud from steering knuckle using Tool C-3711 (on Fury Models use Tool C-3964).

(6) Remove two upper bolts attaching steering knuckle to brake support.

(7) Remove two lower bolts attaching steering arm to steering knuckle and remove steering knuckle. **Support the brake assembly during this operation to prevent damage to brake hose when lower bolts are removed.**

### *Installation*

(1) Position steering knuckle on brake support and install upper mounting bolts and nuts. Tighten nut finger tight only.

(2) Position steering knuckle arm on steering knuckle and install mounting bolts and nuts finger tight only.

(3) Install upper ball joint stud in steering knuckle and tighten ball joint stud nut 55 foot-pounds (Valiant) and 100 foot-pounds (all other models). Install cotter pin.

(4) Tighten steering knuckle upper bolt nuts 55 foot-pounds. Tighten lower bolt nuts 100 foot-pounds (Valiant) 120 foot-pounds (Belvedere-Satellite-Fury).

(5) Place a load on the torsion bar by turning adjusting bolt clockwise.

(6) Install wheel, tire and drum assembly and adjust front wheel bearings (Group 22).

(7) Lower vehicle to floor and install upper control arm rebound bumper. Tighten nut 200 inch-pounds.

(8) Measure and adjust front wheel alignment as necessary.

## STEERING LINKAGE (Figs. 6, 7 and 8)

The tie rod end seals and covers should be inspected for damage at all oil change periods.

### *Removal*

**Removal of tie rod ends from the steering knuckle arm or center link by methods other than using Tool C-3894 will damage tie rod end seal. (Fury Models use Tool C-3742).**

When removing tie rod ends, idler arm or steering gear arm, all seals should be closely inspected for wear or damage. The tie rod ends are of the semi-permanently lubricated type.

MyMopar.com

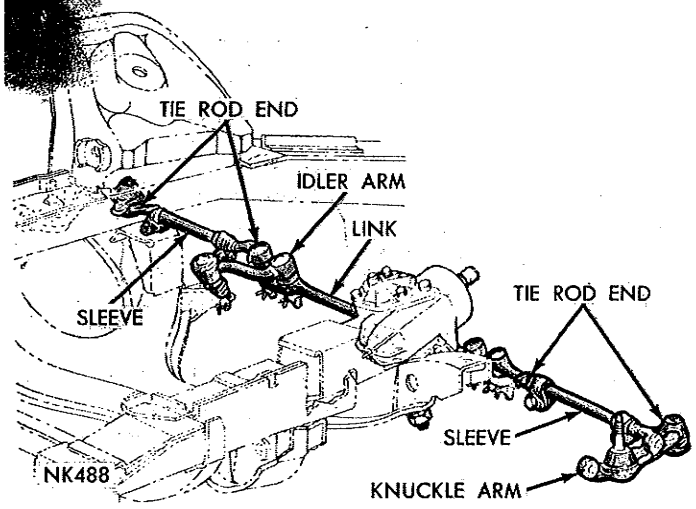


*Fig. 6—Steering Linkage (Belvedere-Satellite)*

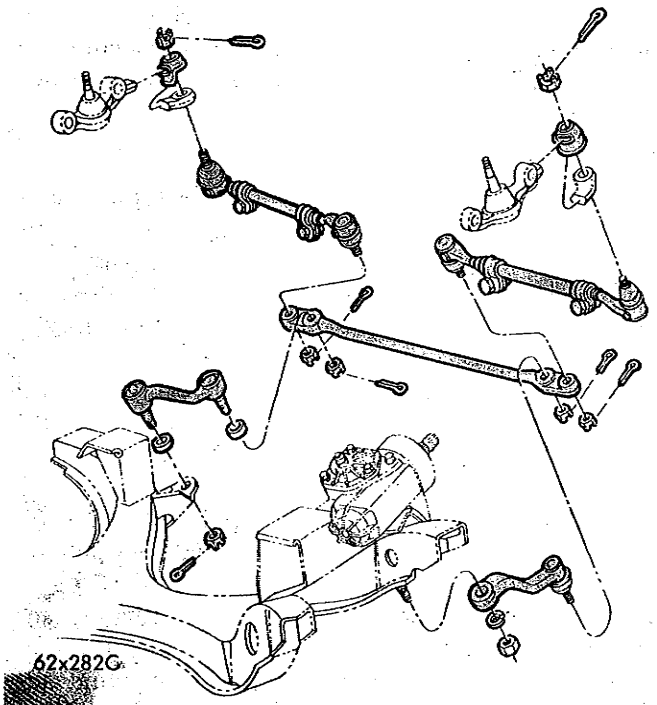


*Fig. 6—Steering Linkage (Belvedere-Satellite)*

Damaged seals require removal of the seals and inspection of the tie rod assembly end at the throat opening. If the parts have not lost all the lubricant or are not contaminated, worn or rusted, use new seals and reinstall, otherwise, a new complete tie rod end assembly should be installed. Lubricate the tie rod end assembly.

(1) Remove tie rod ends from steering knuckle arms (Fig. 9). **Use care not to damage seals.**

(2) Remove inner tie rod ends from center link.

(3) Remove idler arm stud from center link.

(4) Remove idler arm stud from crossmember.

(5) Remove steering gear arm stud from center link.

### *Installation*

Replace all tie rod and steering arm assemblies that are damaged or worn.

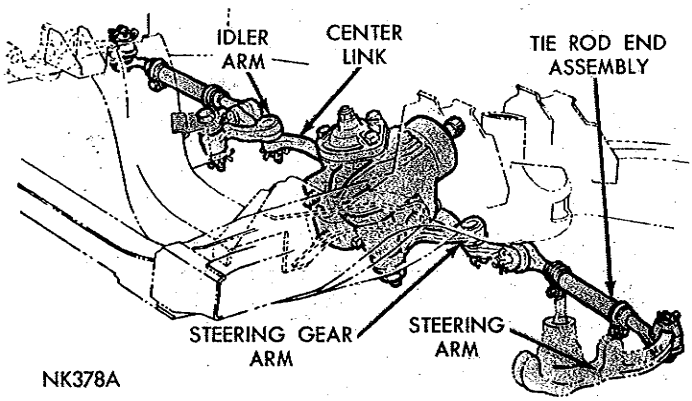


*Fig. 7—Steering Linkage (Fury)*

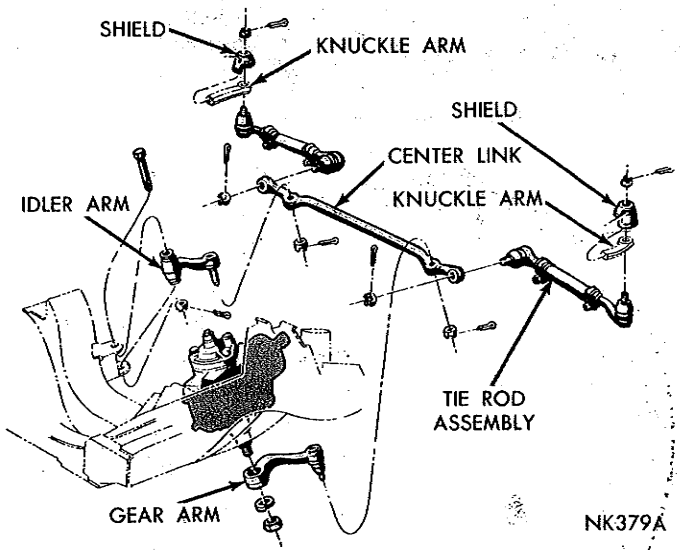


*Fig. 7—Steering Linkage (Fury)*

(1) Position idler arm stud in bracket and install washer and nut. Tighten nut 45 foot-pounds (maximum) and install cotter pin.

(2) Place center link over idler arm and steering gear arm studs and tighten nuts 40 foot-pounds. Install cotter pins.

(3) Connect tie rod ends to steering knuckle arms. Tighten nuts 40 foot-pounds. Slide stone protectors into position and install cotter pins.

(4) Measure and adjust front wheel toe.

## SWAY BAR (Fig. 10)

The sway bar used on Valiant models (Fig. 10) is attached to the front crossmember by two bolts and nuts on each side. The ends of the sway bar are attached to a mounting bracket on each lower control arm by a link, spacer sleeve, rubber insulators and insulator retainers. The front mounting brackets and bushings are serviced only with the sway bar. When installing the rubber insulators, water only should be used as a lubricant. Make certain the insulator retainers are positioned with the concave side toward the insulators. Tighten the front mounting bracket bolt nuts 30 foot-pounds and the link nuts 100 inch-pounds.

MyMopar.com

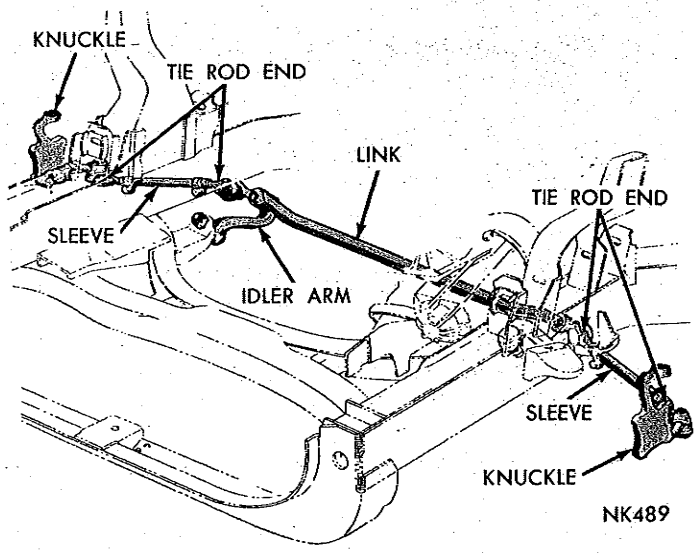


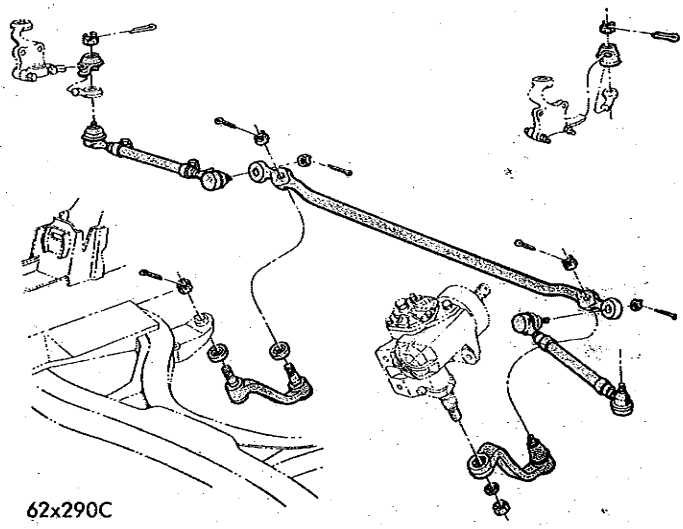


*Fig. 8—Steering Linkage (Valiant)*

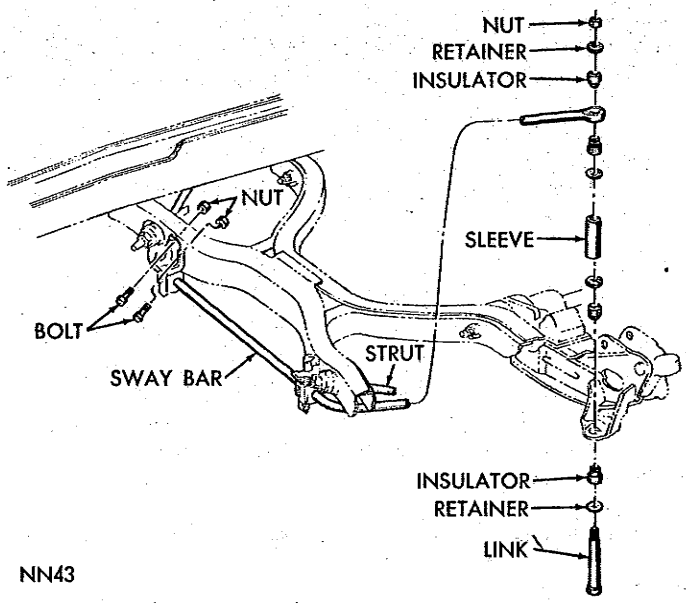


*(Valiant)*

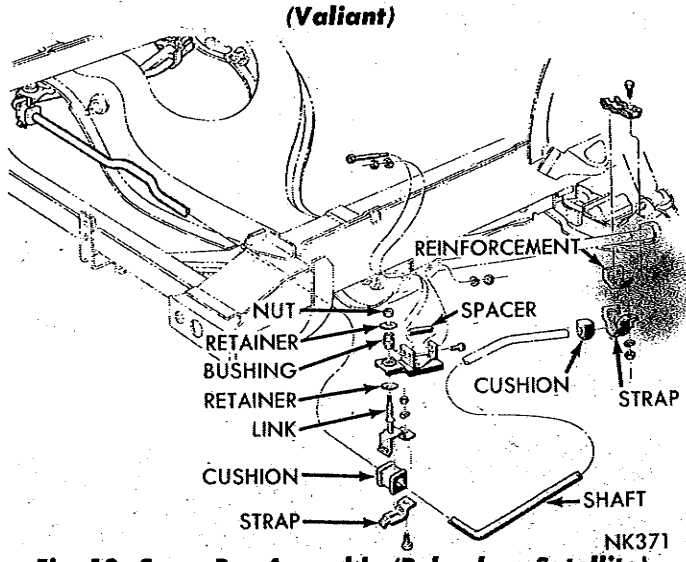


*Fig. 10—Sway Bar Assembly (Belvedere-Satellite)*

### Removal

(1) Remove two sway bar link retaining nuts and retainers.

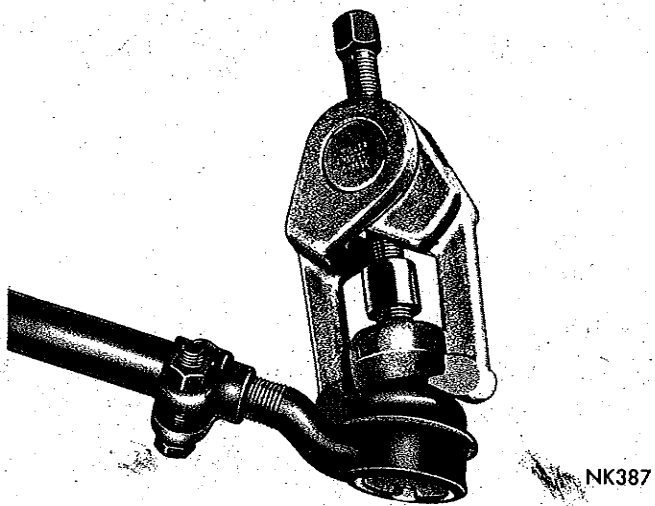


*Fig. 9—Removing Tie Rod End Stud*

(2) Remove two sway bar cushion retaining nuts, washers, straps and bolts (one to each strut) and remove sway bar assembly. Remove bushing retainers from the links.

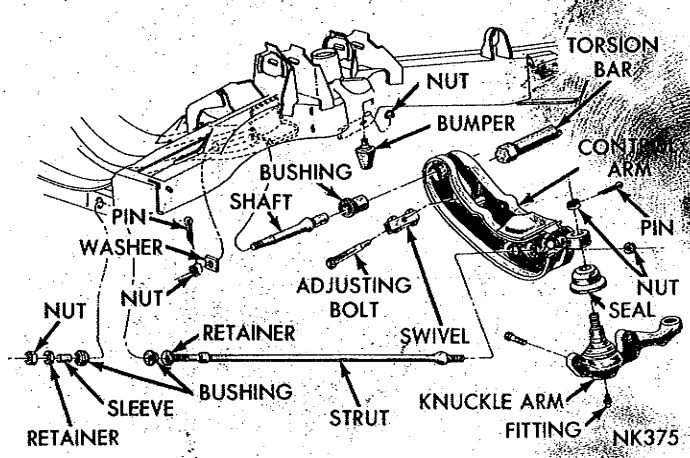


*Fig. 11—Lower Control Arm (Fury)*

MyMopar.com

(3) Remove sway bar link insulating bushings from frame bracket. If bushings are excessively worn or deteriorated install new bushings.

### Installation

(1) Using a twisting motion, install sway bar link bushings. Water may be used as a lubricant to aid in installation.

(2) Position sway bar cushion housing on struts and install straps, bolts, washers and nuts. Tighten nuts 50 foot-pounds.

(3) Install retainers over ends of the links (concave side up). Slide links up through bushings and install retainers (concave side down). Install nuts and tighten 100 inch-pounds.

## LOWER CONTROL ARM AND SHAFT (Fig. 11)

### Removal

**ON MODELS EQUIPPED WITH DISC BRAKES, REFER TO GROUP 5 FOR BRAKE DRUM REMOVAL AND INSTALLATION PROCEDURES.**

(1) Remove the wheel, tire and drum as an assembly.

(2) Remove torsion bar from lower control arm.

(3) Remove cotter pin and slide outer tie rod end seal protector up on steering knuckle arm. Remove tie rod end from steering knuckle arm using Tool C-3894 (Fig. 9), (Fury Models use Tool C-3742). **Use care not to damage seal.**

(4) Remove sway bar to strut strap.

(5) Remove steering knuckle to brake support bolts and remove steering knuckle arm. Move brake support assembly out of way.

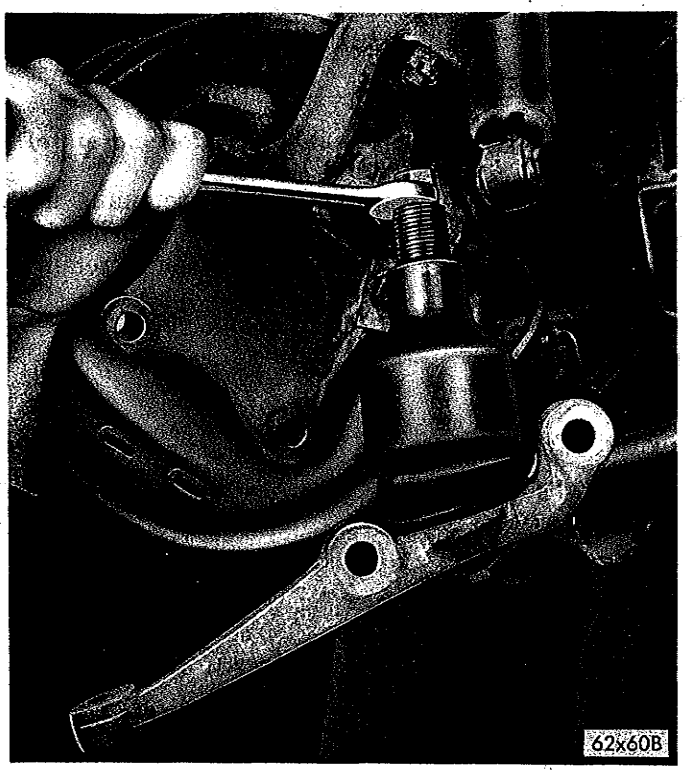


*Fig. 12—Removing Lower Ball Joint Stud (Valiant)*

(6) Remove ball joint stud from lower control arm using Tool C-3846 (Fig. 12), on Fury Models use Tool C-3964. The bottom portion of tool must be positioned between seal and control arm to avoid seal damage.

(7) Remove strut front nut and bushing retainer (Fig. 11) from forward end of cross-member.

(8) Remove cotter pin, nut and washer from lower control arm shaft (Fig. 11).

(9) Tap end of lower control arm shaft with a "soft end" hammer to aid in removal of shaft from crossmember.

(10) Remove lower control arm, shaft and strut as an assembly.

(11) Remove strut bushing from crossmember only if damaged. All models (except Valiant) use a three piece bushing arrangement (Fig. 13).

(12) Remove strut bushing inner retainer from strut.

### Disassembly

(1) Place strut portion of control arm assembly in a vise and remove strut nut.

(2) Remove strut from control arm.

(3) Remove torsion bar adjusting bolt and swivel.

(4) Place lower control arm assembly in an arbor press with torsion bar hex opening up and with a support under outer edge of control arm.

(5) Place a brass drift into hex opening and press shaft out of lower control arm. The bushing inner shell will remain on shaft.

(6) Cut and remove rubber portion of bushing from

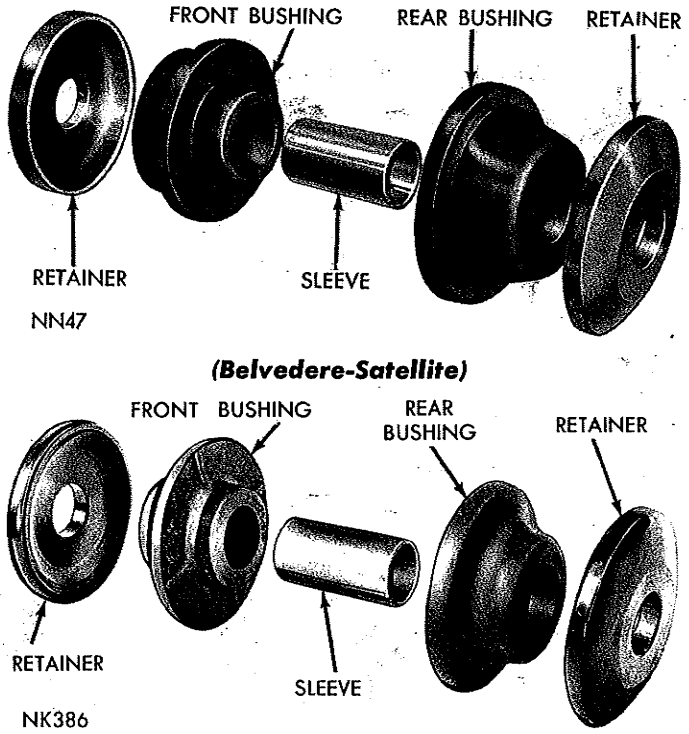


*Fig. 13—Strut Crossmember Bushing (Fury)*

MyMopar.com

control arm.

(7) Remove bushing outer shell by cutting with a chisel. **Use care not to cut into control arm.**

(8) Remove bushing inner shell from pivot shaft.

### Assembly

(1) Position new bushing on shaft (flange end of bushing first) and seat bushing on shoulder of shaft.

(2) Press shaft and bushing assembly into lower control arm using Tool C-3848 and an arbor press. (Fury Models use Tool C-3556). In some instances it may be necessary to reduce the diameter of shaft shoulder to facilitate use of tool.

(3) Install torsion bar adjusting bolt and swivel.

(4) Position strut in lower control arm and tighten nut 110 foot-pounds.

### Installation

(1) On Valiant Models, install new strut bushing with a twisting motion. Water may be used as a lubricant to aid in installation. On all other models, position rear bushing half (Fig. 13) into crossmember.

(2) Place strut bushing inner retainer on strut and install lower control arm shaft and strut assembly.

(3) Install strut front bushing and inner sleeve. Install strut bushing outer retainer and nut finger tight only.

(4) Install lower control arm shaft washer and nut finger tight only.

(5) Position lower ball joint stud into lower control arm and tighten nut 100 foot-pounds (Fury Models 115 foot-pounds). Install cotter pin.

(6) Position brake support on steering knuckle and install two upper bolts and nuts finger tight only.

(7) Position steering knuckle arm on steering knuckle and install two lower bolts and nuts.

(8) Tighten upper bolt nuts 55 foot-pounds. Tighten lower bolt nuts 100 foot-pounds (Valiant) 120 foot-pounds (Belvedere-Satellite-Fury).

(9) Inspect tie rod end seal and replace if damaged. Connect tie rod end to steering knuckle arm and tighten nut 40 foot-pounds. Slide tie rod end seal protector over tie rod end and install cotter pin.

(10) Connect shock absorber to control arm and tighten nut 50 foot-pounds and install torsion bar.

(11) Install wheel, tire and drum assembly and adjust front wheel bearing (Group 22).

(12) Lower vehicle to floor and tighten strut nut, at crossmember 40 foot-pounds.

(13) Adjust front suspension height.

(14) Tighten lower control arm shaft nut 130 foot-pounds (Fury 180 foot-pounds) and install cotter pin.

(15) Measure and adjust front wheel alignment as necessary.

## LOWER CONTROL ARM STRUT

### Removal

(1) Remove lower control arm, shaft and strut as an assembly.

(2) Remove nut holding strut to lower control arm and remove strut from control arm.

### Installation

(1) Position strut into control arm and tighten nut 110 foot-pounds.

(2) Install lower control arm, shaft and strut assembly.

## LOWER BALL JOINTS

**ON MODELS EQUIPPED WITH DISC BRAKES, REFER TO GROUP 5 FOR BRAKE DRUM REMOVAL AND INSTALLATION PROCEDURES.**

### Removal

The lower ball joint is integral with the steering arm and is not serviced separately. Compression type lower ball joints are used on all models.

(1) Remove upper control arm rebound bumper.

(2) Raise vehicle so front suspension is in full rebound. Remove all load from torsion bar by turning adjusting bolt counterclockwise. If jacks are used to raise vehicle it is essential that a support be used between the crossmember and jack.

(3) Remove wheel, tire and drum as an assembly. It may be necessary to back-off the brake shoes to facilitate removal of drum assembly.

(4) Remove two lower bolts from the brake support attaching steering arm and ball joint assembly to steering knuckle.

(5) Remove tie rod end from steering arm using Tool C-3894 (Fury models use Tool C-3749). **Use care not to damage seal.**

(6) Using Tool C-3846 (Fury models use Tool C-3964) remove ball joint stud from lower control arm (Fig. 12), and remove steering arm and ball joint assembly.

### Installation

(1) Place a new seal over ball joint (if necessary) and using a 1⅞ inch socket press retainer portion of seal down on ball joint housing until it is securely locked in position (on police and taxi vehicles, install seal using Tool C-3736).

(2) Position steering arm and ball joint assembly on steering knuckle and install two mounting bolts. Tighten nuts 100 foot-pounds (Valiant), 120 foot-pounds (Belvedere-Satellite-Fury).

(3) Insert ball joint stud into opening in lower control arm.

(4) Install stud retaining nut and tighten 100 foot-pounds, (Fury models 115 foot-pounds). Install cotter pin and lubricate ball joint.

(5) Inspect tie rod seal for damage and replace if damaged. Connect tie rod end to steering knuckle arm and tighten nut 40 foot-pounds. Slide tie rod end

MyMopar.com

seal protector over nut and install cotter pin.

(6) Place a load on torsion bar by turning adjusting bolt clockwise.

(7) Install wheel, tire and drum assembly and adjust front wheel bearing (Group 22).

(8) Lower vehicle to floor, install upper control arm rebound bumper and tighten nut 200 inch-pounds.

(9) Measure front suspension height and adjust if necessary.

(10) Measure front wheel alignment and adjust if necessary.

## UPPER CONTROL ARM

### *Removal and Disassembly*

(1) Place a jack under lower control arm as close to wheel as possible and raise vehicle until wheel clears floor.

(2) Remove wheel and tire as an assembly.

(3) On Valiant, Belvedere and Satellite models, remove upper and lower ball joint stud nuts. On Valiant models, it may be necessary to add approximately 7/16 inch to flat washers over lower ball joint stud to allow the use of Tool C-3711 without damaging threads on lower ball joint stud. Place Tool C-3711 over stud. Turn threaded portion of tool locking it securely against the upper stud (Fig. 14).

To use Tool C-3711 as outlined, it may be necessary to modify the tool, as shown in Figure 15.

(4) Spread tool enough to place upper stud under a load, then strike steering knuckle sharply with a hammer to loosen stud. **Do not attempt to force stud out of steering knuckle with tool alone.**

(5) On Fury models, remove upper ball joint nut and remove stud from steering knuckle using Tool C-3964.

(6) Remove nuts, lockwashers, cams and cam bolts attaching upper control arm and bushings (Figs. 16, 17, 18) to support brackets. Lift control arm up and

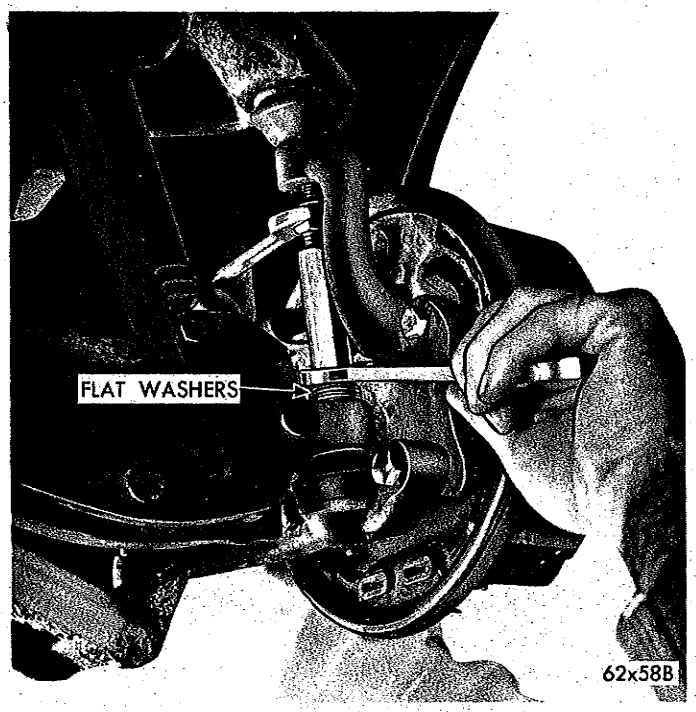


*Fig. 14—Removing Upper Ball Joint Stud (Valiant)*

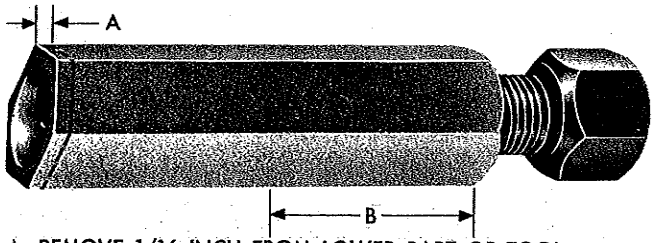


*Fig. 15—Tool C-3711 Modified*

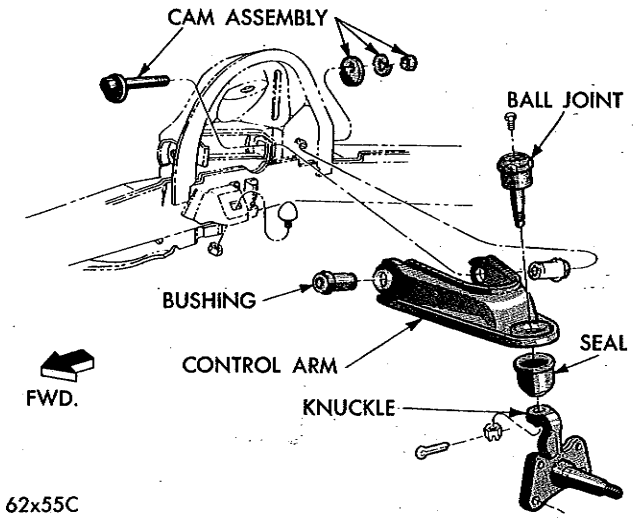


*Fig. 16—Upper Control Arm (Belvedere-Satellite)*

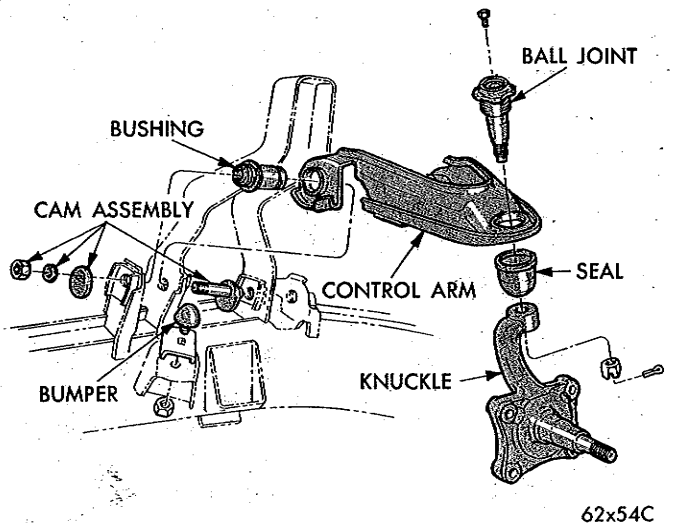


*Fig. 17—Upper Control Arm (Valiant)*

MyMopar.com

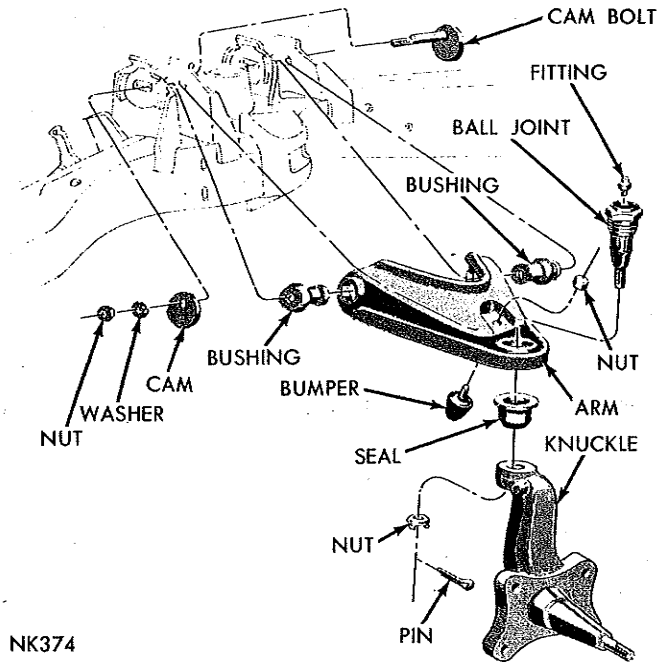


*Fig. 18—Upper Control Arm (Fury)*

away from support.

(7) Remove ball joint (Fig. 19) using Tool C-3560 (Tool C-3714 Valiant). The seal will come off as ball joint is removed.

(8) Assemble Tool C-3710 (Tool C-3962 Fury) over bushing and press bushing out of arm (from inside out) (Fig. 20). **To remove upper control arm rear bushing support sleeve (used on Belvedere-Satellite police and taxi application) assemble Tool C-3710, using adaptor SP-3826 in place of adaptor SP-3088, over bushing and press bushing out of arm (Fig. 20).**

### *Assembly*

When installing new bushings, be sure control arm is supported squarely at point where bushing is being pressed in. **Do not use oil or grease to aid in installation.**

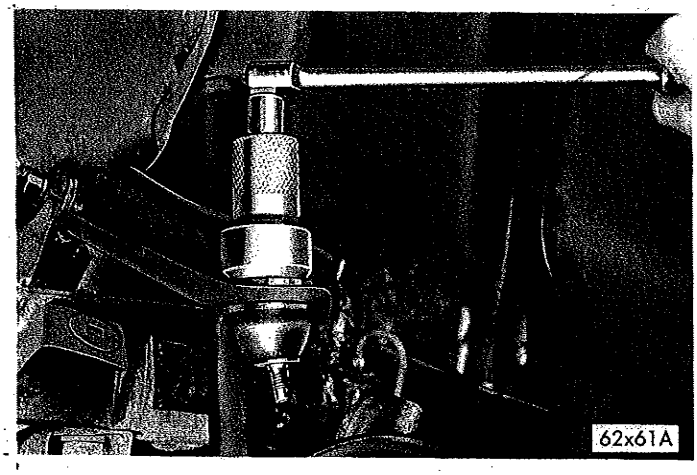


*Fig. 19—Removing or Installing Upper Ball Joint*

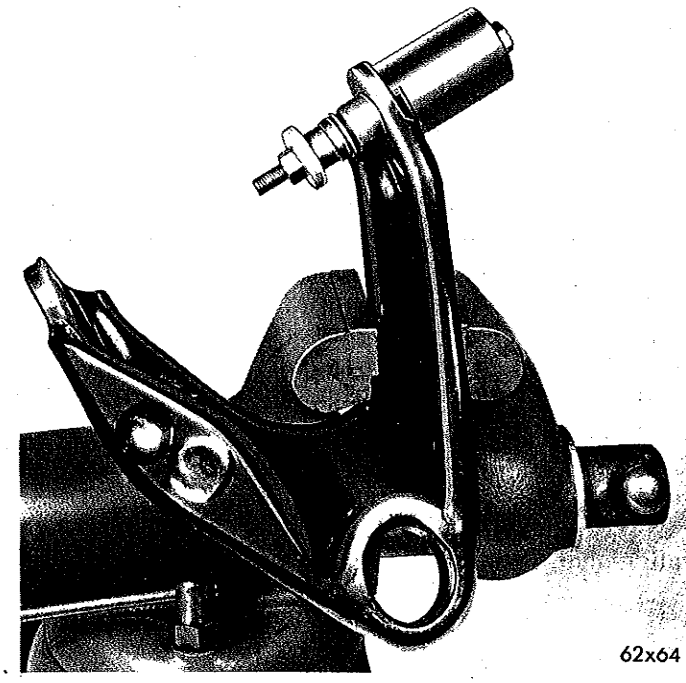


*Fig. 20—Removing Upper Control Arm Bushing*

(1) Position flange end of new bushing in Tool C-3710, (Tool C-3962 Fury) support control arm squarely, and force bushings into control arm (from outside) until tapered portion of bushing seats on the arm. **On Belvedere-Satellite police and taxi application (using bushing support sleeve) remove Tool C-3710 after bushing has been installed and install adaptor SP-3827 in place of SP-3233A cup on tool and install support sleeve on bushing (Fig. 21).**

(2) Install ball joint into arm using Tool C-3560 (Tool C-3714 Valiant). Tighten until seated (125 foot-

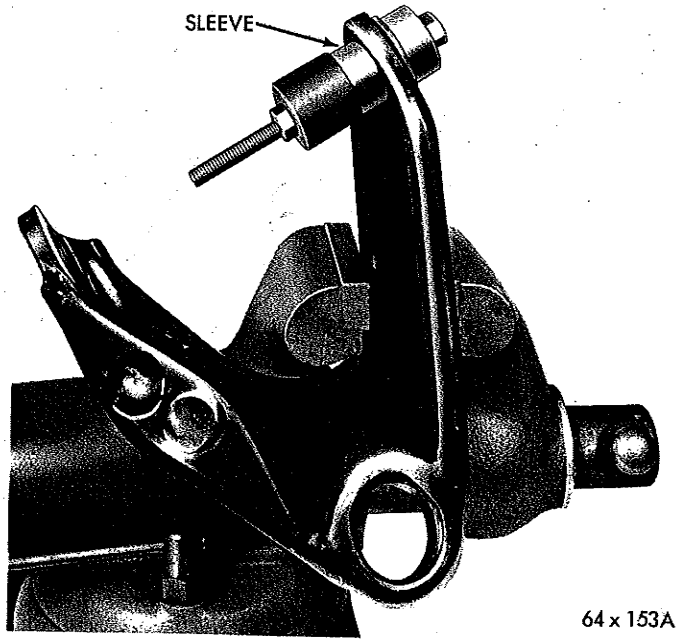


*Fig. 21—Installing Support Sleeve on Bushing*

MyMopar.com

pounds minimum). The ball joint will cut threads into a new arm during tightening operations.

(3) Install a new ball joint using a 1⅞" socket, making sure it is seated fully on ball joint housing. On Valiant Models install seal using Tool C-3713.

### *Installation*

(1) Slide control arm into position and install cam bolts, cams, washers and nuts (Figs. 16, 17 and 18). Tighten nuts in preparation for final adjustments.

(2) Slide upper ball joint stud into position in steering knuckle and install nut. Tighten nut 100 foot-pounds, (Valiant 55 foot-pounds). Install cotter pin and lubricate ball joint. Tighten lower stud nut 100 foot-pounds (Fury 115 foot-pounds).

(3) Install wheel and tire. Adjust wheel bearing (Group 22).

(4) Measure and adjust vehicle height and wheel alignment. Tighten cam bolt nuts 65 foot-pounds.

## UPPER BALL JOINTS

**ON MODELS EQUIPPED WITH DISC BRAKES, REFER TO GROUP 5 FOR BRAKE DRUM REMOVAL AND INSTALLATION PROCEDURES.**

### *Removal*

(1) Raise vehicle by placing a jack under lower control arm as close as possible to wheel.

(2) Remove wheel, tire and drum.

(3) On Belvedere, Satellite and Valiant Models, remove upper and lower ball joint stud nuts. On Valiant models, it will be necessary to add approximately $^{7}/_{16}$ inch of flat washers over lower ball joint stud to allow the use of Tool C-3711 without damaging threads on lower ball joint stud. Place Tool C-3711 over studs. Turn threaded portion of tool locking it securely against upper stud (Fig. 14). To use Tool C-3711 as outlined it will be necessary to modify it, as shown in Figure 15.

(4) Spread tool enough to place upper stud under a load, then strike steering knuckle sharply with a hammer to loosen stud. **Do not attempt to force stud out of steering knuckle with tool alone.**

(5) **On Fury Models,** remove upper ball joint stud nut and remove stud from control arm using Tool C-3964.

(6) Remove tool, then remove ball joint stud from steering knuckle.

(7) Using Tool C-3560, (Tool C-3714 Valiant) unscrew ball joint from upper control arm (Fig. 19). The seal will come off as ball joint is being removed.

### *Installation*

**When installing a ball joint, make certain the ball joint threads engage those of the control arm squarely. Balloon type seals should always be replaced once they have been removed.**

(1) Screw ball joint squarely into control arm as far as possible by hand.

(2) Using Tool C-3560 (Tool C-3714 Valiant) tighten ball joint until it bottoms on housing. Tighten to a minimum of 125 foot-pounds.

If ball joint cannot be torqued to 125 foot-pounds, inspect threads on ball joint and also in control arm and replace as necessary.

(3) Position a new seal over ball joint stud and install using a 1⅞" socket making sure it is seated fully on ball joint housing. On Valiant Models, install seal ring using Tool C-3713.

(4) Position ball joint stud in steering knuckle and install a retaining nut.

(5) Tighten nut 100 foot-pounds, (Valiant 55 foot-pounds). Install cotter pin, lubricate ball joint.

(6) Install lower ball joint stud nut and tighten 100 foot-pounds, (Fury 115 foot-pounds).

(7) Install wheel, tire and drum assembly and adjust front wheel bearings (Group 22).

(8) Lower vehicle and adjust front suspension height.

# SPECIFICATIONS

| MODEL | BELVEDERE-SATELLITE | FURY | VALIANT |
|---|---|---|---|
| CAMBER—Left | +¼° to +¾° (Preferred +½°) | | |
| —Right | 0° to +½° (Preferred +¼°) | | |
| CASTER—Manual Steering | 0° to −1° | | |
| —Power Steering | +¼° to +1¼° | | |
| HEIGHT* (Inches) | 1⅞ ± ⅛ | 1⅜ ± ⅛ | 2 ± ⅛ |
| Heavy Duty Suspension* | — | — | 2⅜ ± ⅛ |
| Side to Side Difference (Max) | ⅛ | | |
| STEERING AXIS INCLINATION | 7½° | | |
| TOE-IN | 3/32 inch to 5/32 inch (Preferred ⅛ inch) | | |
| TOE-OUT ON TURNS (When inner wheel is 20°) outer wheel is | 17.8° | 18.8° | 17.5° |
| TORSION BARS | | | |
| Length (inches) | 41 | 44 | 0.83 |
| Diameter (inches)—Std. Suspension (6 cyl.) | 0.86 | 0.96 | 0.85 |
| (8 cyl.) | 0.88 | 0.98† 0.94‡ | 35.8 |

MyMopar.com

| | | | |
|---|---|---|---|
| —Heavy Duty Suspension | 0.90<br>0.88* | 0.98 | 0.87 |
| —Station Wagons | 0.88 | 0.94 | |
| TREAD (inches) Front | 59.5 | 62.0 | 55.94 |
| Rear | 58.5 | 60.7 | 55.56 |
| WHEEL BASE (inches) | 116 | 119.5<br>**121.5 | 106 |

* with Sway Bar
** Fury Station Wagon
† with 273 & 318 C.I. engine
‡ with 383 & 426 C.I. engine

# TIGHTENING REFERENCE

| | FOOT POUNDS | INCH POUNDS |
|---|---|---|
| Ball Joint—Upper | 125 (Min.) | |
| Nut—Lower (Except Fury) | 100 | |
| (Fury) | 115 | |
| —Upper (Except Valiant) | 100 | |
| (Valiant) | 55 | |
| Control Arm | | |
| Pivot Shaft Nut (Except Fury) | 130 | |
| (Fury) | 180 | |
| Rebound Bumpers | | 200 |
| Crossmember Bolts | 150 | |
| Engine Mounting Bolts | 85 | |
| Idler Arm Stud Nuts | | |
| at Center Link | 40 | |
| at Mounting Bracket | 45 | |
| Isolator Nuts | | |
| Front at Engine Support | 30 | |
| Rear | 50 | |
| Shock Absorber Nuts—Front | | |
| Lower | 50 | |
| Upper | 25 | |
| Steering Gear Mounting Bolts | 50 | |

| | FOOT POUNDS | INCH POUNDS |
|---|---|---|
| Steering Knuckle Bolt Nuts | | |
| Lower (except Valiant) | 120 | |
| (Valiant) | 100 | |
| Upper | 55 | |
| Strut Nuts | | |
| Front | 40 | |
| Rear | 110 | |
| Sway Eliminator Shaft | | |
| Cushion Retainer Bolt Nut | | |
| (Belvedere-Satellite) | 45 | |
| (Fury) | 30 | |
| Frame Bracket Bolt Nut (Valiant) | 30 | |
| Link Bushing Retainer Bolt Nut | 35 | |
| Link to Frame Bracket Nut | | 100 |
| Tie Rod Ends | | |
| Sleeve Clamp Bolt Nut | 15 | |
| Stud Nuts | 40 | |
| Wheel Nuts | | |
| Except Valiant | 65 | |
| Valiant | 55 | |

MyMopar.com

MyMopar.com

# REAR AXLE

## CONTENTS


| | Page | | Page |
|---|---|---|---|
| REAR AXLE ASSEMBLY (7¼") RING GEAR | 2 | SPECIFICATIONS | 30 |
| REAR AXLE ASSEMBLY (8¾") RING GEAR | 11 | SURE-GRIP DIFFERENTIAL | 25 |
| SERVICE DIAGNOSIS | 1 | TIGHTENING REFERENCE | 32 |


## SERVICE DIAGNOSIS

| Condition | Possible Cause | Correction |
|---|---|---|
| REAR WHEEL NOISE | (a) Wheel loose. | (a) Tighten loose wheel nuts. |
| | (b) Scored wheel bearing cup or cone. | (b) Check rear wheel bearings. If scored or worn, replace. |
| | (c) Defective, brinelled wheel bearing. | (c) Defective or brinelled bearings must be replaced. Check rear axle shaft end play. |
| | (d) Excessive axle shaft end play. | (d) Readjust axle shaft end play. |
| | (e) Bent or sprung axle shaft flange. | (e) Replace bent or sprung axle shaft. |
| SCORING OF DIFFERENTIAL GEARS AND PINIONS | (a) Insufficient lubrication. | (a) Replace scored gears. Scoring marks on the pressure face of gear teeth or in the bore are caused by instantaneous fusing of the mating surfaces. Scored gears should be replaced. Fill rear axle to required capacity with proper lubricant. See Specification section. |
| | (b) Improper grade of lubricant. | (b) Replace scored gears. Inspect all gears and bearings for possible damage. Clean out and refill axle to required capacity with proper lubricant. See Lubrication section. |
| | (c) Excessive spinning of one wheel. | (c) Replace scored gears. Inspect all gears, pinion bores and shaft for scoring, or bearings for possible damage. Service as necessary. |
| TOOTH BREAKAGE (RING GEAR AND PINION) | (a) Overloading. | (a) Replace gears. Examine other gears and bearings for possible damage. Replace parts as needed. Avoid Overloading. |
| | (b) Erratic clutch operation. | (b) Replace gears, and examine remaining parts for possible damage. Avoid erratic clutch operation. |
| | (c) Ice-spotted pavements. | (c) Replace gears. Examine remaining parts for possible damage. Replace parts as required. |
| | (d) Normal fatigue. | (d) Replace gears. Examine broken parts to determine cause of normal fatigue. |
| | (e) Improper adjustment. | (e) Replace gears. Examine other parts for possible damage. Make sure ring gear and pinion backlash is correct. |
| REAR AXLE NOISE | (a) Insufficient lubricant. | (a) Refill rear axle with correct amount of the proper lubricant. See Specification section. Also check for leaks and correct as necessary. |
| | (b) Improper ring gear and pinion adjustment. | (b) Check ring gear and pinion tooth contact. |
| | (c) Unmatched ring gear and pinion. | (c) Remove unmatched ring gear and pinion. Replace with a new matched gear and pinion set. |
| | (d) Worn teeth on ring gear or pinion. | (d) Check teeth on ring gear and pinion for contact. If necessary, replace with new matched set. |
| | (e) Loose drive pinion bearings. | (e) Adjust drive pinion bearings. |
| | (f) Loose differential gear bearings. | (f) Adjust differential gear bearings. |
| | (g) Misaligned or sprung ring gear. | (g) Check ring gear for runout. |

MyMopar.com

| Condition | Possible Cause | Correction |
|---|---|---|
| | (h) Loose carrier housing bolts. | (h) Tighten carrier housing nuts to required torque. See Service Standards. Also, check for oil leaks and correct as necessary. |
| | (i) Loose drive pinion companion flange nut. | (i) Tighten drive pinion flange nut to torque specified under, "Axle Tightening References." |
| **LOSS OF LUBRICANT** | (a) Lubricant level too high. | (a) Drain excess lubricant by removing filler plug and allow lubricant to level at lower edge of filler plug hole. |
| | (b) Worn axle shaft oil seals. | (b) Replace worn oil seals with new ones. Prepare new seals before replacement. |
| | (c) Cracked rear axle housing. | (c) Repair or replace housing as required. |
| | (d) Worn drive pinion oil seal. | (d) Replace worn drive pinion oil seal with a new one. |
| | (e) Scored and worn companion flange. | (e) Replace worn or scored companion flange and oil seal. |
| | (f) Clogged breather. | (f) Clean breather thoroughly. |
| **OVERHEATING OF UNIT** | (a) Lubricant level too low. | (a) Refill rear axle. |
| | (b) Incorrect grade of lubricant. | (b) Drain, flush and refill rear axle with correct amount of the proper lubricant. See Specification Section. |
| | (c) Bearings adjusted too tightly. | (c) Readjust bearings. |
| | (d) Excessive wear in gears. | (d) Check gears for excessive wear or scoring. Replace as necessary. |
| | (e) Insufficient ring gear to pinion clearance. | (e) Readjust ring gear and pinion backlash and check gears for possible scoring. |

# REAR AXLE ASSEMBLY 7¼" RING GEAR

## INDEX


| | Page | | Page |
|---|---|---|---|
| Axle Shafts and Bearings | 2 | Pinion Installation and Bearing Preload | 8 |
| Differential | 4 | Rear Axle Assembly | 4 |
| Drive Gear and Pinion Backlash | 9 | Removal | 4 |
| Drive Pinion Depth of Mesh | 8 | Installation | 11 |
| Pinion Bearing Cup Installation | 7 | Lubrication | 11 |


## GENERAL INFORMATION

The 7¼" Rear Axle Assembly shown in (Fig. 1), is a semi-floating type which incorporates a one-piece rear axle housing assembly. The drive pinion and the differential case with drive gear are mounted directly into the center section of the rear axle housing assembly. Access to the differential, drive gears and bearings is obtained by removal of the carrier cover. Axle shaft bearings, oil seals and drive pinion oil seal can be removed and serviced without removing the complete axle assembly from the vehicle, but the unit should be removed for any additional operations.

A Sure Grip Differential is available in the 7¼" Axle Assembly, similar to those used in the 8¾" axle. Refer to the Sure Grip Differential Section of the Axle Group for the Servicing procedure.

All Belvedere 6 cylinder models except station wagons, taxi and police application will be equipped with the 7¼" diameter axle assembly, that has been widened to the Plymouth rear track. All service will be performed the same as standard 7¼" diameter axle, except where noted in the service procedure.

A new hooded breather has been attached to the left leg of the axle housing approximately 15" inboard of the flange face. Gear ratio identification is stamped on the front face of the pad at the bottom of housing.

**SHOULD THE REAR AXLE BECOME SUBMERGED IN WATER, THE LUBRICANT MUST BE CHANGED IMMEDIATELY TO AVOID THE POSSIBILITY OF EARLY AXLE FAILURE RESULTING FROM CONTAMINATION OF THE LUBRICANT BY WATER DRAWN INTO THE VENT HOLE.**

## SERVICE PROCEDURES

### AXLE SHAFTS AND BEARINGS

#### *Removal and Disassembly*

(1) With wheels removed, remove clips holding brake drum on axle shaft studs and remove brake drum.

(2) Disconnect brake lines at wheel cylinders.

MyMopar.com

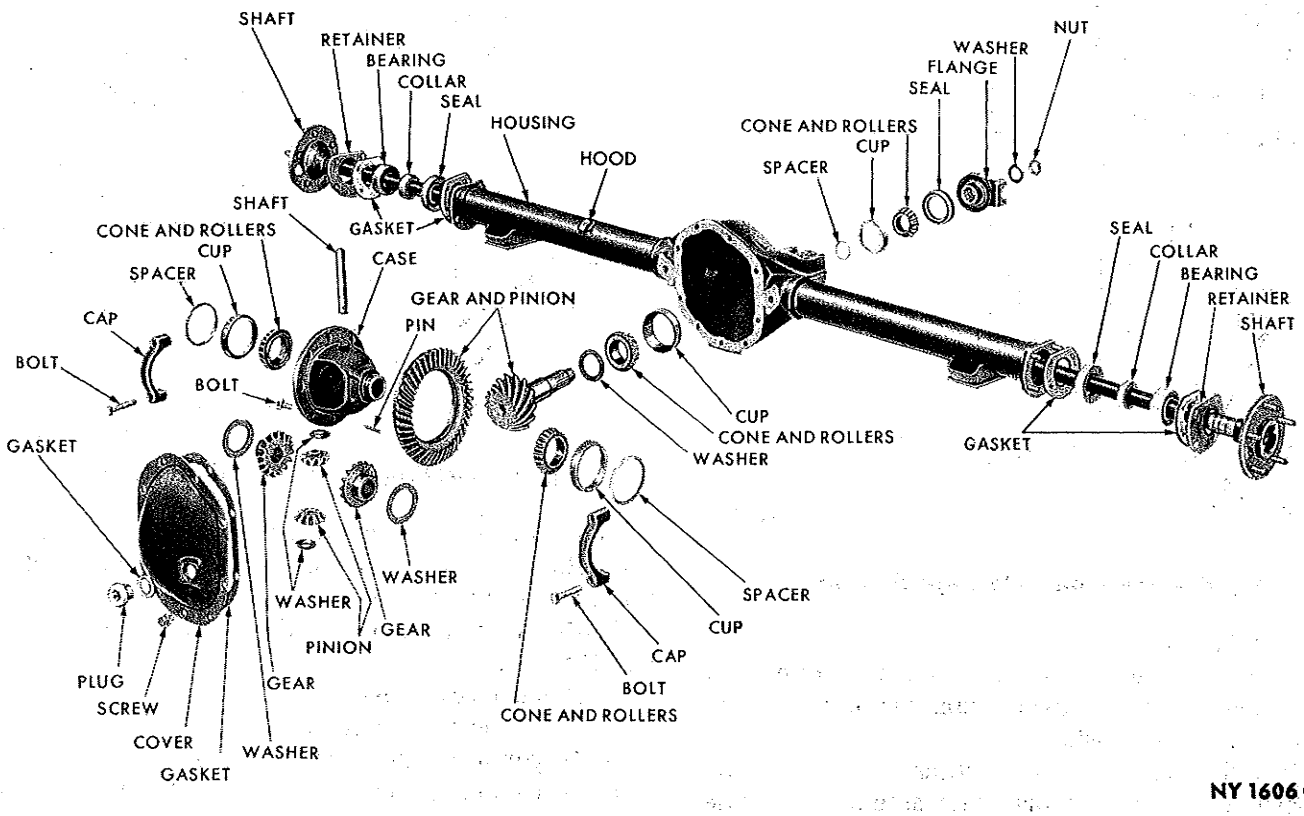


***Fig. 1—7¼" Rear Axle Assembly (Disassembled)***

(3) Using access hole in axle shaft flange, remove retainer nuts.

(4) Attach axle shaft remover tool C-3725 to axle shaft flange and remove axle shaft. Remove brake assembly (Fig. 2).

(5) Remove axle shaft oil seal from housing.

(6) Position axle shaft bearing retaining collar on a heavy vise or anvil and using a chisel cut deep grooves into retaining collar at 90° intervals (Fig. 3). This will enlarge bore of collar and permit it to be driven off of axle shaft. The bearing can now be removed using tool C-3725 and C-3926 (Fig. 4). **On Belvedere models equipped with 7¼ inch axle assembly to remove bearing use tool C-3971 and adapter C-4000 and protective sleeve over bearing race. Tool must be installed with two bolts (Fig. 5) on each side of the hole in axle shaft flange.**

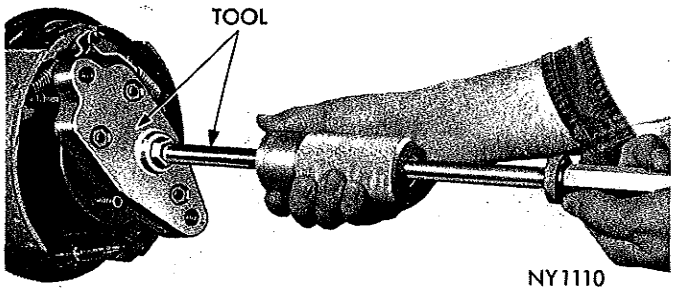


***Fig. 2—Removing Axle Shaft***

### *Assembly and Installation*

(1) Install axle shaft retainer plate, bearing, and bearing retainer collar on axle shaft. The axle shaft bearing and bearing retainer collar must fit tightly on bearing journal of axle shaft. Using tool C-3725 and C-3926 press them into place by tightening bolts in tool alternately (Fig. 6). **Belvedere models equipped with 7¼ inch axle, install bearings and retainer collars using Tool C-3971 and adapter C-4000.**

(2) Install new axle shaft oil seals in axle housing,

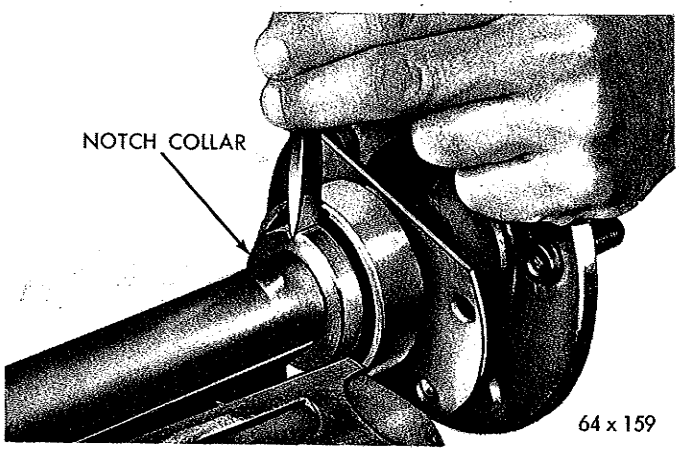


***Fig. 3—Removing Axle Shaft Collar***

MyMopar.com

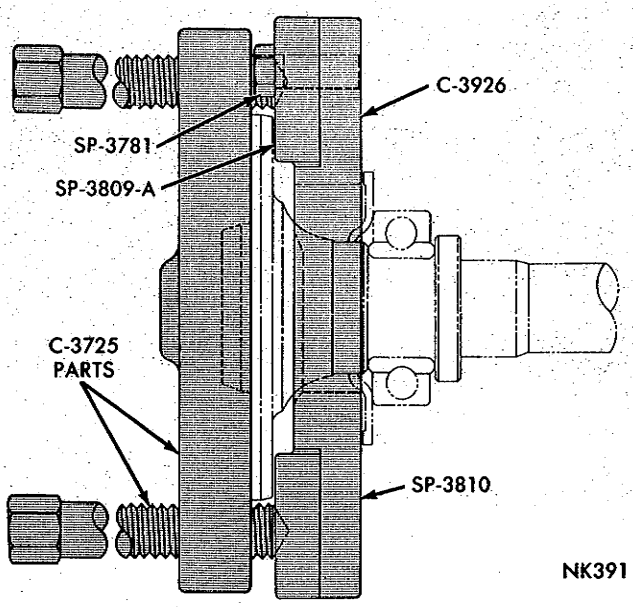


*Fig. 4—Removing Axle Shaft Bearing*

using tool C-3734 (Fig. 7).

(3) Apply a light film of Multi-purpose Lubricant NLGI grade No. 2 on outside diameter of bearing to prevent rust and corrosion.

(4) Install a foam gasket on studs of axle housing and position brakes support plate assembly on axle housing studs.

(5) Carefully slide axle shaft assembly through oil seal and engage splines in differential side gear.

(6) Tap end of axle shaft lightly with a non-metallic mallet to position axle shaft bearing in housing bearing bore. Position retainer plate over axle housing studs. Install retainer nuts and tighten 35 foot-pounds.

## REAR AXLE ASSEMBLY

### *Removal*

Should it become necessary to remove rear axle

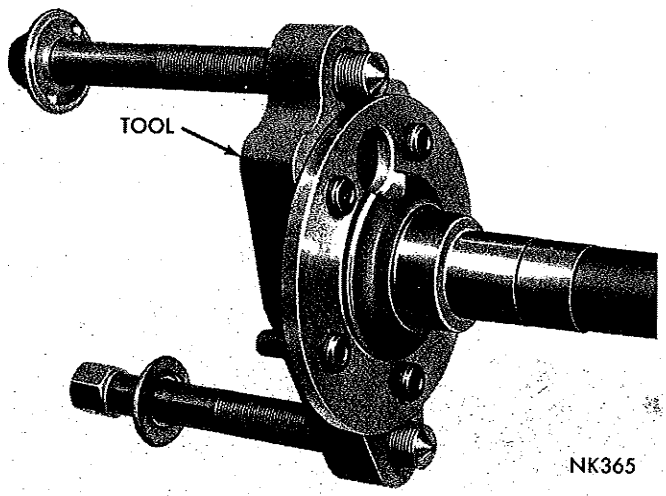


*Fig. 5—Tool C-3725 Installed on Axle Flange*

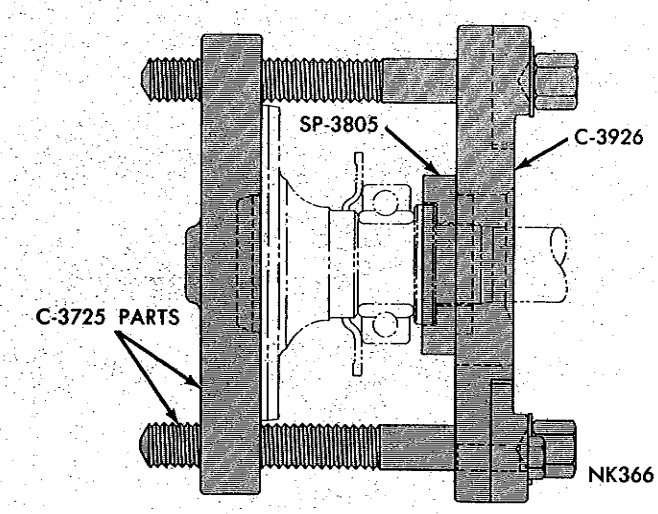


*Fig. 6—Installing Rear Axle Shaft Bearing*

assembly for overhaul or repair, proceed as follows:

(1) Raise rear of vehicle until rear wheels clear floor. Support body at front of rear springs.

(2) Block brake pedal in the up position using a wooden block.

(3) Remove rear wheels.

(4) Disconnect hydraulic flexible line.

(5) Disconnect parking brake cable.

(6) Disconnect propeller shaft at differential pinion yoke and secure in an upright position to prevent damage to front universal joint.

(7) Remove shock absorber from spring plate studs and loosen rear spring "U" bolt nuts and remove "U" bolts.

(8) Remove axle assembly from vehicle.

## DIFFERENTIAL

### *Removal and Disassemby*

Side play and runout checks taken during disassembly will be very useful in reassembly.

(1) Remove drain plug in cover assembly and drain lubricant from housing.

(2) Remove cover and with a suitable cleaning solvent, clean the axle housing and differential case and drive gear assembly.

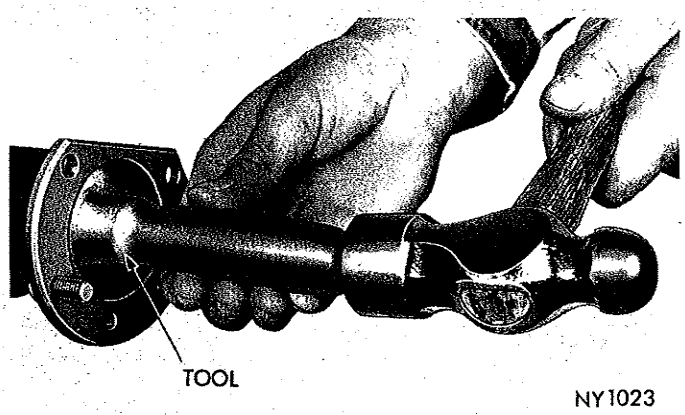


*Fig. 7—Installing Axle Shaft Oil Seal*

MyMopar.com

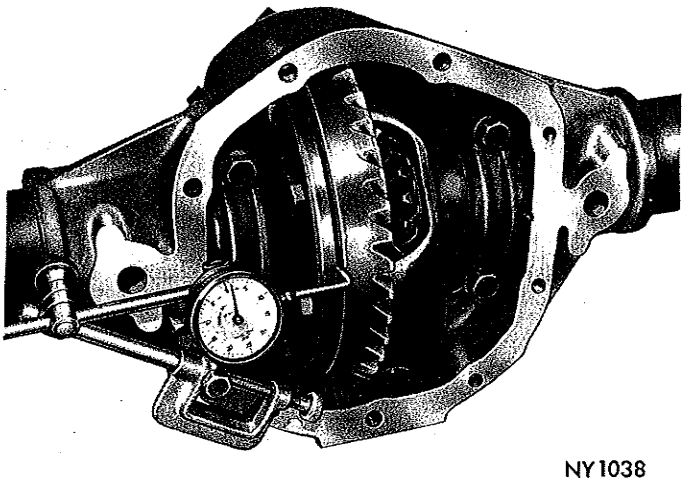


*Fig. 8—Measuring Drive Gear Runout*

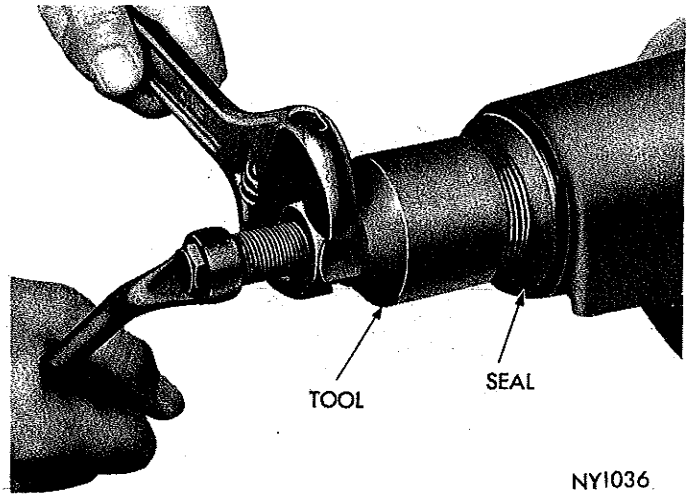


*Fig. 10—Removing Pinion Oil Seal*

(3) Measure for differential side play. Position a screwdriver or pinch bar between left side of axle housing and differential case flange, then using a prying motion determine if side play is present. THERE SHOULD BE NO SIDE PLAY.

(4) In preparing to measure drive gear runout on differential case, (provided no side play was found) mount a dial indicator tool C-3339 on pilot stud C-3288, and load the indicator stem slightly when plunger is at right angles to back face of drive gear (Fig. 8).

(5) Measure drive gear runout by turning drive gear several complete revolutions and reading dial indicator. Mark drive gear and differential case at point of maximum runout. The marking of differential case will be very useful later in checking differential case runout. Total indicator reading should be no more than .005 inch. If runout exceeds .005 inch the differential case may be damaged. A test for case runout will be described later.

(6) Remove drive pinion nut and washer. Using Tool C452 and holding Tool C3281, remove drive pinion flange (Fig. 9).

(7) Using Tool C-748 remove drive pinion oil seal (Fig. 10). Remove front pinion bearing cone and preload shim.

(8) Mark axle housing and differential bearing caps for location in reassembly (Fig. 11).

(9) Remove differential bearing caps and locate spreader Tool C-3721 with tool dowel pins seated in locating holes of axle housing. Turn tool screw finger tight at this time.

(10) Install pilot stud, Tool C-3288, on left side of axle housing. Attach dial indicator and load indicator stem slightly against opposite side of axle housing (Fig. 12).

(11) Tighten spreader tool nut sufficiently to obtain .012 to .015 inch movement of dial indicator to permit removal of differential case assembly. (Do not spread over .020 inch.)

(12) Remove dial indicator and remove differential and ring gear assembly from axle housing. A light prying action must be used to unseat the differential assembly from the housing (Fig. 13). Differential bearing cups and preload shims must be kept with

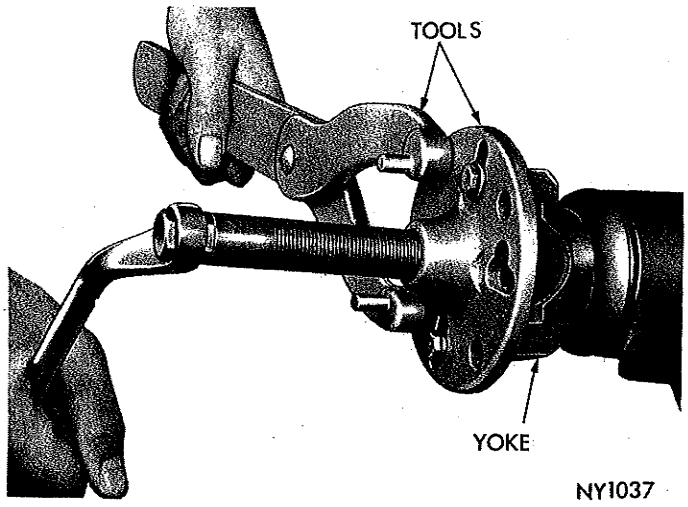


*Fig. 9—Removing Companion Flange*

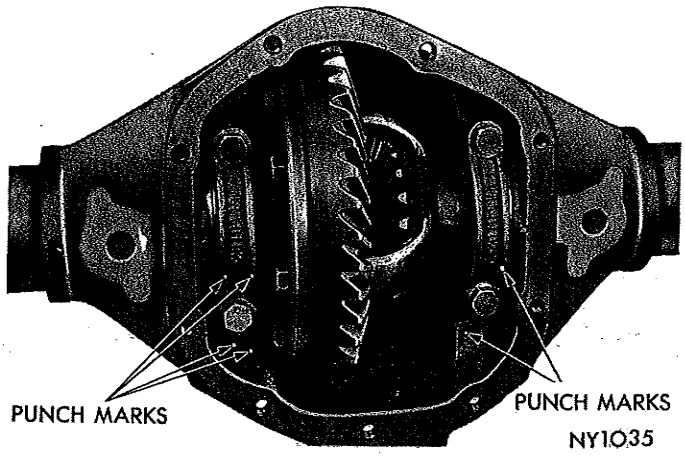


*Fig. 11—Bearing Cap Identification*

MyMopar.com

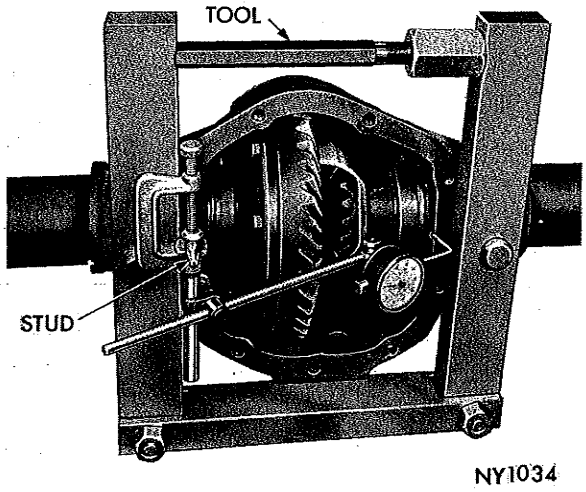


*Fig. 12—Spreading Rear Axle Housing*

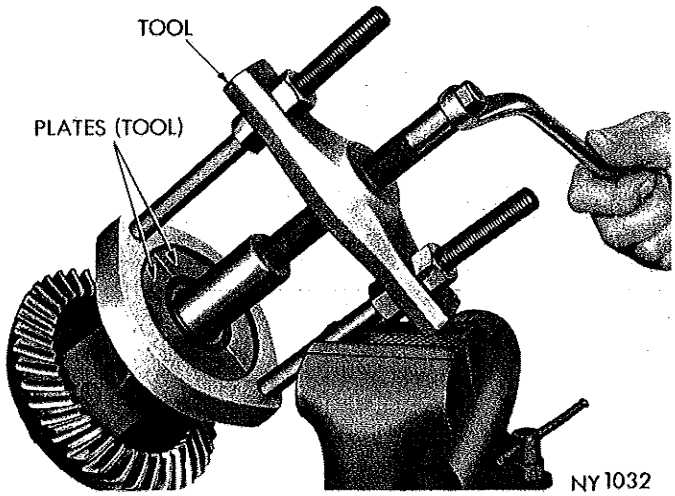


*Fig. 14—Removing Differential Bearing Cone*

respective bearing cones. Do not remove spreader tool.

(13) Remove drive pinion and rear bearing assembly from axle housing.

(14) Using a flat end brass drift, remove front and rear bearing cups from housing.

(15) Mount differential case and ring gear assembly in a vise equipped with soft jaws (brass).

(16) Remove drive gear bolts. BOLTS ARE LEFT HAND THREAD. With a non-metallic hammer tap drive gear loose from differential case pilot and remove.

(17) If a drive gear runout exceeded .005 inch in step 4, differential case flange runout should be remeasured. Install differential case with appropriate bearing cups and shims in axle housing. Loosen nut of spreader tool and remove, mount dial indicator in contact with drive gear flange face to take runout readings as in steps 3, 4 and 5. Total allowable runout should not exceed .003 inch. It is often possible to reduce high runout by positioning drive gear 180° from point of maximum runout when re-assembling ring gear on differential case.

(18) With small drift remove differential pinion shaft lock pin from drive gear side of case.

(19) With a brass drift remove differential pinion shaft.

(20) Rotate differential side gears until differential pinions appear at differential case windows and remove.

(21) Remove differential side gears and thrust washers.

(22) Remove differential bearings using Tool C-293 and #39 plates (Fig. 14).

(23) Remove rear pinion bearing cone from pinion stem using Tool C-293 and #40 plates (Fig. 15).

### Cleaning and Inspection

(1) Clean all parts except axle shaft bearings with a suitable cleaning solvent. With a damp cloth wipe axle shaft bearing outer race. Clean off all rust and corrosion. To clean axle housing tubes insert a stiff

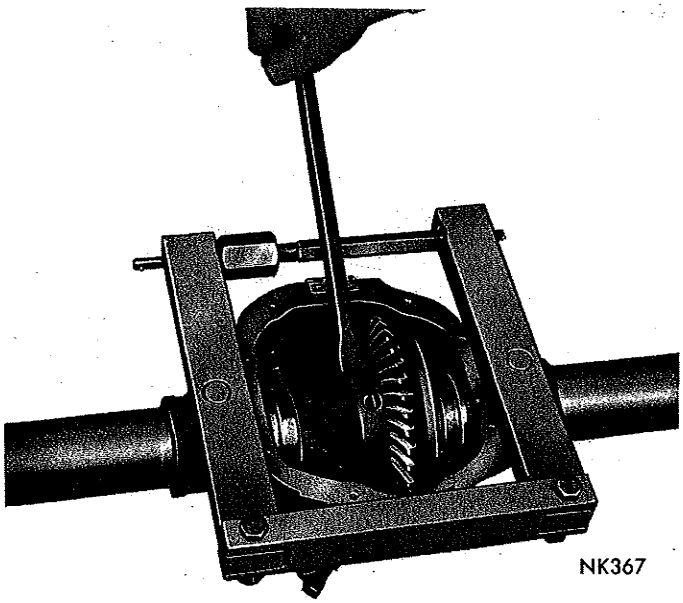


*Fig. 13—Loosening Differential Assembly*

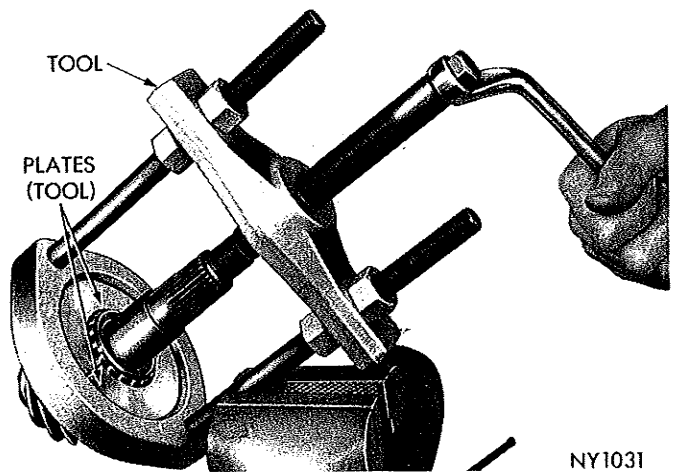


*Fig. 15—Removing Rear Pinion Bearing Cone*

MyMopar.com

wire into tube, attach a clean cloth to wire at center section and withdraw from center outward.

(2) All machined contact surfaces in the axle housing and differential bearing caps should be smooth and free of any raised edges. Front and rear pinion bearing cup bore machined surfaces should be smooth. Raised metal on shoulders of bores incurred in removal of cups should be flattened by use of a flat nosed punch.

(3) The axle drive shaft bearing and oil seal bores at both ends of housing should be smooth and free of rust and corrosion. This also applies to the brake support plate and housing flange face area.

(4) The axle shaft splines should be smooth and free of excessive wear. The axle shaft oil seal journal should be smooth and free of nicks, scratches or blemishes. To remove any imperfections polish with #600 crocus cloth (without reducing diameter of axle shaft oil seal surface).

(5) If axle shaft bearings, collars and retainers are removed from shafts they are unfit for further use and MUST BE REPLACED. Refer to axle shaft assembly procedure.

(6) Differential bearings and front and rear pinion bearing cone and cup assemblies should have a smooth appearance with no broken or dented surfaces on rollers or roller contact surfaces. The bearing roller retainer cages must not be distorted or cracked.

(7) Differential side gears and pinions should have smooth teeth with a uniform contact pattern without excessive wear or broken surfaces. The differential side gear hub surfaces and thrust washer contact surfaces should be smooth and free from any scoring or metal pickup.

(8) The machined thrust washer surface areas inside the differential case should be polished and with no surface imperfections. The pinion shaft bore in differential case should be round and smooth. The differential pinion shaft should be round and without excessive wear in areas of contact with either differential case or differential pinions.

(9) The ring gear and drive pinion teeth should have a uniform contact pattern with smooth and unbroken surfaces without excessive wear. Machined surfaces of the pinion stem (at points of contact with either rear pinion bearing contact journal or rear pinion bearing mounting shim surface) should be smooth.

### *Assembling the Differential*

Lubricate all parts when assembling and adjusting.

(1) Install thrust washers on differential side gears and position gears in case.

(2) Place thrust washers on both differential pinion gears and mesh the pinion gears with the side gears, having pinion gears exactly 180° apart.

(3) Rotate side gears to align pinion gears and

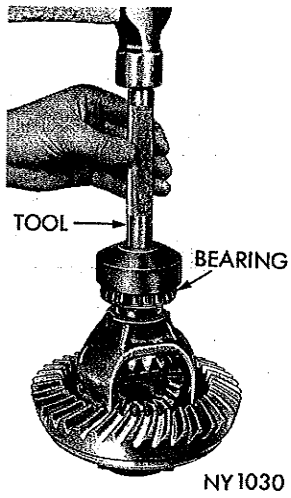


***Fig. 16—Installing Differential Bearing Cone***

washers with differential pinion shaft holes in case.

(4) Install differential pinion shaft with care not to damage thrust washers. Hole in pinion shaft must align with lock pin hole in differential case.

(5) Install lock pin in differential case from drive gear tooth side.

(6) Position drive gear on differential case to separate the prints of maximum runout 180° apart and start all bolts through case into drive gear. Finger tighten. (LEFT HAND THREAD.)

(7) Tap drive gear against differential case flange with non-metallic mallet. Tighten bolts to 55 foot-pounds.

(8) Install differential bearing cones with Tool C-3716 (Fig. 16).

## PINION BEARING CUP INSTALLATION

Rear axle gauge Tool C-3715 is used to install drive pinion bearing cups as well as to determine pinion depth of mesh (Fig. 17).

(1) Start both drive pinion bearing cups into axle housing.

(2) Place rear spacer SP-3244 on main tool. Seat rear pinion bearing cone on spacer and hold tool in housing.

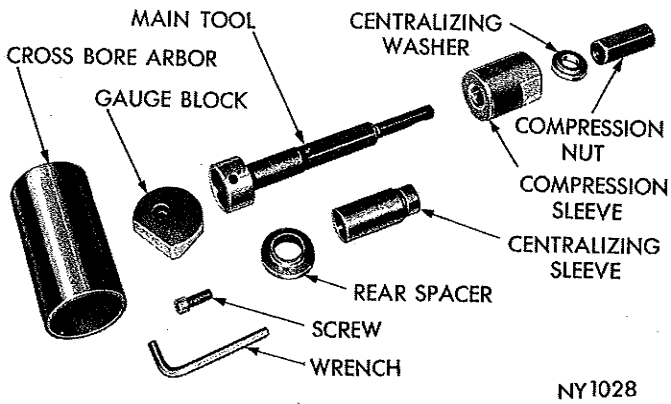


***Fig. 17—Pinion Setting Gauge Tool C-3715***

MyMopar.com

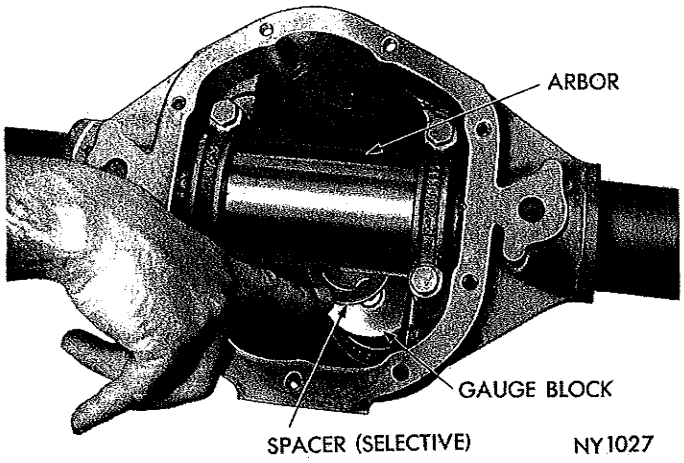


***Fig. 18—Measuring Housing For Pinion Shim Thickness***

(3) Place centralizing sleeve SP-3245 on tool and place front pinion bearing cone on centralizing sleeve, followed by tool sleeve, centralizing washer and nut.

(4) While holding compression sleeve from turning with Tool C-3281, tighten nut, thereby drawing pinion bearing cups into axle housing bearing cup bores. Permit tool to turn several revolutions during tightening operation to permit bearing rollers to align. Leave tool in carrier for determining depth of mesh.

## DRIVE PINION DEPTH OF MESH (Using Tool C-3715)

(1) With main tool left in axle housing after installing drive pinion bearing cups, loosen tool nut and re-tighten to produce 15-25 inch-pounds of turning torque. Attach gauge block to main tool using allen screw.

(2) Position cross bore arbor in axle housing differential bearing seats and install bearing caps. Tighten cap bolts lightly.

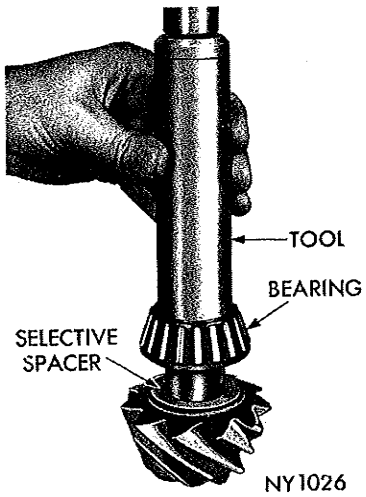


***Fig. 19—Installing Pinion Shim and Rear Bearing Cone***

(3) Select rear pinion bearing mounting shim which will fit between cross bore arbor and gauge block. This fit must be snug but not too tight (similar to the pull of a feeler gauge) (Fig. 18).

If the mark on the pinion head is plus ( + 2), select a shim that many thousandths thinner for installation. If mark on pinion has a minus ( − 2), select a shim that many thousandths thicker for installation. Treat other pinion markings in a similar manner. Spacers are available in one thousandths of an inch increments from .084 to .100 inch.

(4) Remove tool arbor and tool from axle housing.

## PINION INSTALLATION AND BEARING PRELOAD

Pinion bearing mounting shims are chamfered on one side and must be installed on the pinion stem with chamfered side toward pinion head.

(1) Place selected shim and rear pinion bearing cone on pinion stem. Using installing sleeve Tool C-3717, press bearing on pinion stem (Fig. 19).

(2) Hold drive pinion and bearing assembly in axle housing and install original preload shim (chamfered side toward shoulder), followed by front pinion bearing cone, pinion flange, belleville washer (convex side of washer up) and pinion nut.

(3) Position housing with nose up. Tighten pinion nut to 240 foot-pounds (minimum) with torque wrench C-485, using holding Tool C-3281 on pinion flange. Position holding Tool C-3281 in several positions to make a complete revolution while tightening. Remove holding tool and rotate pinion assembly several revolutions in both directions to align rollers. Recheck torque to 240 foot-pounds. Torque may have diminished as bearing rollers were aligned by rotating.

(4) Using inch pound torque wrench C-685, measure pinion bearing preload by rotating pinion with handle of wrench floating. Take readings while handle is moving through several revolutions. Accurate readings can be made only with nose of axle in upright position. Correct preload is 15-25 inch-pounds. Bearing preload should be uniform during full revolution. A reading which varies during rotation indicates a binding condition which should be corrected. **Use thinner shim to increase preload and thicker shim to decrease preload.** Always perform steps 3 and 4 in exactly the same manner each time to obtain accurate readings. Preload shims are available in one thousandths of an inch increments from .074 to .106 inch.

(5) When front pinion bearing preload is correct, remove pinion nut, washer and flange.

(6) Apply a thin film of sealing compound to inner bore of axle housing in areas of front pinion bearing oil seal.

MyMopar.com

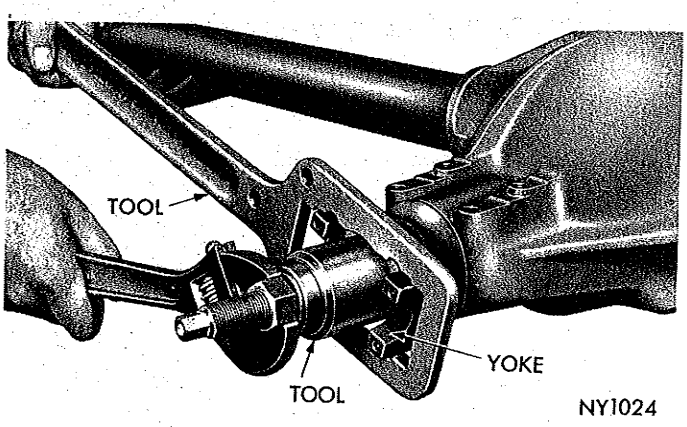


*Fig. 20—Installing Companion Flange*

(7) Install pinion bearing oil seal (lip toward pinion head) with Tool C-4002 to space the seal the proper distance from axle housing nose (Fig. 21).

(8) Install drive pinion flange using Tool C-3718 and holding Tool C-3281 (Fig. 20).

(9) Remove Tool C-3718 and install belleville washer, (convex side of washer up) and pinion nut. Tighten nut to 240 foot-pounds.

## DRIVE GEAR AND PINION BACKLASH

(1) With drive pinion and bearings installed and bearing preload set, install differential case and ring gear assembly, and cups. Insert a .254 inch preload spacer on ring gear side (Fig. 22) of axle housing. Do not install bearing caps.

(2) Install a preload spacer on right side of housing that will fit snugly but still leave a slight amount of end play.

(3) To measure, move differential to the left side or ring gear side of rear axle housing. Using two sets of feeler gauges, insert feeler gauges between the spacer and the right side of the axle housing above the center line of the case (Fig. 23). Insert the same thickness of feeler gauges between the spacer and the axle housing below center line of case. Increase thickness of gauges until heavy drag is felt.

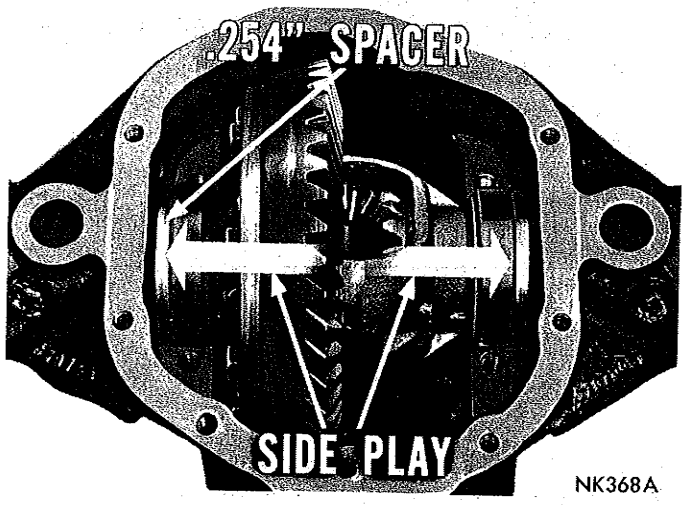


*Fig. 22—Temporarily Install Thinnest Spacer*

(4) Rotate differential and ring gear assembly several times in both directions to seat bearings and cups and re-check feeler gauge drag.

(5) Install a spacer totaling the combined thickness of spacer and feeler gauge. This will provide zero end play.

(6) Measure drive gear backlash at 4 positions at approximately 90 degrees intervals (Fig. 24). Refer to "Differential Preload Spacer Chart" for selection of proper spacers to provide .004" to .007" backlash.

(7) Remove differential case and ring gear assembly from axle housing.

(8) With proper spacers selected for left and right sides of assembly as specified by "Differential Preload Spacer Chart", attach spreader Tool C-3721 with tool dowel pins seated in locating holes of axle housing. Tighten tool screw only finger tight at this time.

(9) Install pilot stud Tool C-3288 on left side of axle housing. Attach dial indicator and load indicator stem slightly against opposite side of axle housing

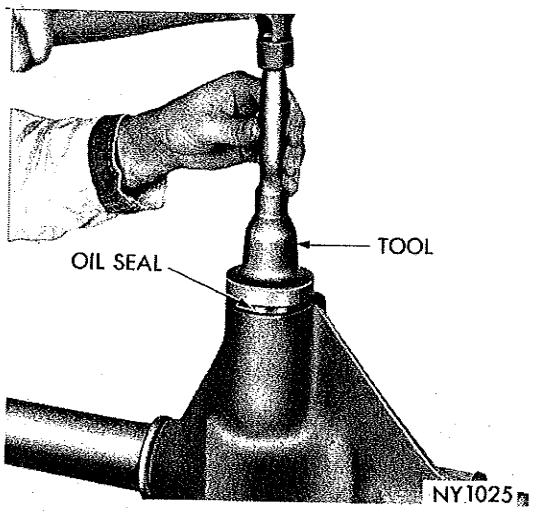


*Fig. 21—Installing Pinion Oil Seal*

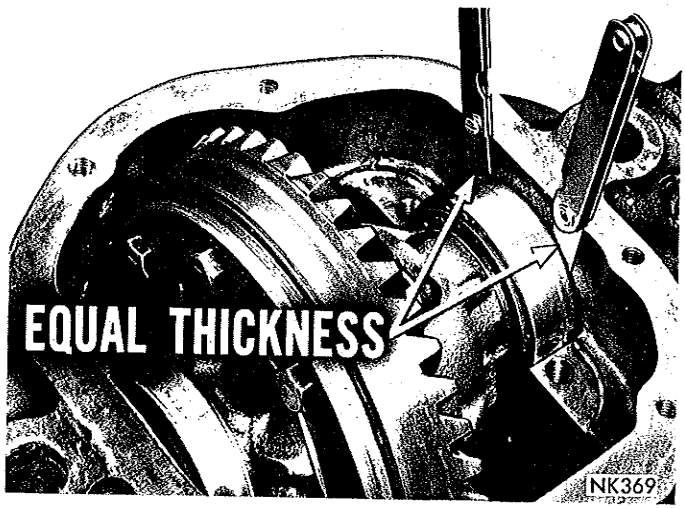


*Fig. 23—Feeler Gauges Measuring Thickness*

MyMopar.com

## DIFFERENTIAL PRELOAD SPACER SELECTION CHART

| Backlash at Zero End Play | Change Left Spacer Thickness by: | Change Right Spacer Thickness by: | Backlash at Zero End Play | Change Left Spacer Thickness by: | Change Right Spacer Thickness by: |
|---|---|---|---|---|---|
| .020 | +.026 | −.016 | .010 | +.012 | −.002 |
| .019 | +.024 | −.014 | .009 | +.010 | −.000 |
| .018 | +.022 | −.012 | .008 | +.008 | +.002 |
| .017 | +.022 | −.012 | .007 | +.008 | +.002 |
| .016 | +.020 | −.010 | .006 | +.006 | +.004 |
| .015 | +.020 | −.010 | .005 | +.004 | +.006 |
| .014 | +.018 | −.008 | .004 | +.002 | +.008 |
| .013 | +.016 | −.006 | .003 | +.002 | +.008 |
| .012 | +.014 | −.004 | .002 | +.000 | +.010 |
| .011 | +.014 | −.004 | .001 | +.000 | +.012 |

Should the zero end play backlash measure more than .020 (Maximum chart figure) increase the thickness of the left spacer from the specified .254″ to a thickness great enough to reduce the zero end play backlash within the chart limits; then follow the recommended procedure.

(Fig. 12).

(10) Tighten spreader tool nut sufficiently to obtain .012″ to .015″ movement of dial indicator to permit installation of differential case assembly. Do not spread over .020 inch.

(11) Remove dial indicator.

(12) Holding differential assembly with bearing cups on respective bearing and selected preload spacers, carefully install differential and ring gear assembly into axle housing.

(13) Loosen spreader tool nut and remove spreader.

(14) Install differential bearing caps on respective sides and alternate tightening bolts to 40 foot-pounds.

(15) Install dial indicator to axle housing with indicator parallel to drive gear. With pointer of indicator contacting the drive side of ring gear tooth, measure drive gear backlash. At least four readings should be taken on teeth approximately 90° apart to find the point of least backlash, and mark the tooth.

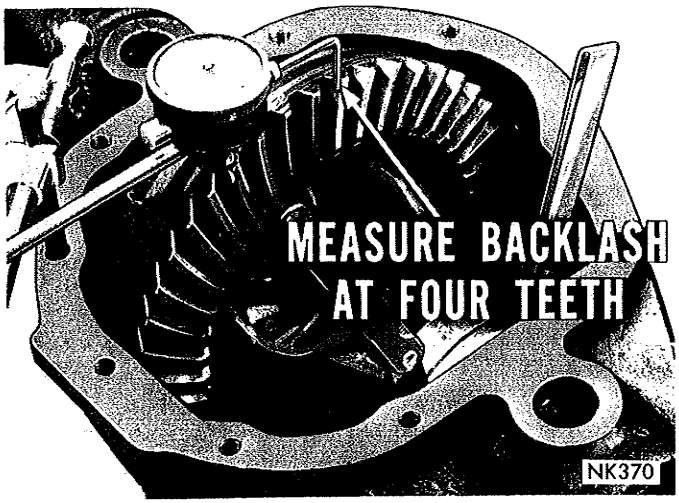


*Fig. 24—Finding Minimum Backlash*

(16) At point of minimum backlash, dial indicator should read .004 to .007 inch. If reading is not within this tolerance, it will be necessary to refer to chart and Install Differential Spacers and re-check backlash to bring within proper specifications.

(17) Spread a thin film of red lead on drive and coast side of drive gear teeth and rotate drive gear to obtain tooth contact pattern. Refer to "Gear Tooth Contact Patterns (Fig. 25) to determine if pattern is properly located.

(18) With gasket surface of axle housing and cover thoroughly cleaned, install a new cover gasket. Install cover and attaching screws and tighten to 20 foot-pounds.

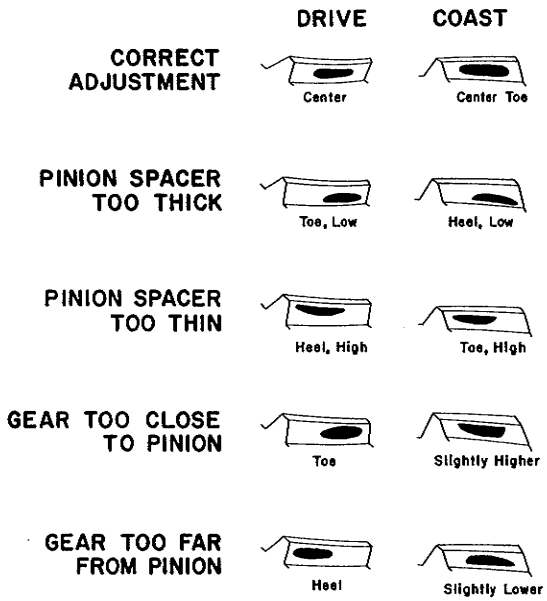


1. PINION SPACER CHANGES AFFECT THE COAST SIDE CONTACT FASTER THAN THE DRIVE SIDE
2. BACKLASH ADJUSTMENTS AFFECT THE DRIVE SIDE CONTACT MUCH FASTER THAN THE COAST SIDE
3. ALL BACKLASH MEASUREMENTS SHOULD BE MADE AT THE POINT OF MINIMUM BACKLASH

NY1022A

*Fig. 25—Gear Tooth Contact Pattern*

MyMopar.com

## REAR AXLE ASSEMBLY

### *Installation*

**Refer to Paragraph "Axle Shaft Assembly" when installing the rear axle shafts.**

(1) With body supported at front of rear spring, position rear axle assembly spring seats over the spring center bolts.

(2) Install spring "U" bolts and tighten nuts to 45 foot-pounds and install shock absorbers on spring plate studs.

(3) Connect hand brake cable.

(4) Install propeller shaft and tighten rear clamp screws to 15 foot-pounds.

(5) Connect brake lines to rear wheel cylinders and connect hydraulic flexible line and bleed and adjust brakes.

(6) Install brake drums, retainer clips and rear wheels and tighten to 55 foot-pounds.

## LUBRICATION

Refill axle assembly with multi-purpose gear lubricant as defined by MIL-L-2105B on all rear axles except those with a Sure-Grip differential; such a lubricant is available under Part Number 2585317, Hypoid Gear Lubricant.

In Sure-Grip differentials, use only the special multi-purpose gear lubricant intended for use in limited-slip differentials. Such a lubricant is available under Part Number 2585318, Special Sure-Grip Lubricant.

| Anticipated Temperature | Viscosity Grade |
|---|---|
| Above −10°F. | SAE 90 |
| As low as −30°F. | SAE 80 |
| Below −30°F. | SAE 75 |

**"SHOULD THE REAR AXLE BECOME SUBMERGED IN WATER, THE LUBRICANT MUST BE CHANGED IMMEDIATELY TO AVOID THE POSSIBILITY OF EARLY AXLE FAILURE RESULTING FROM CONTAMINATION OF THE LUBRICANT BY WATER DRAWN INTO THE VENT HOLE."**

## REAR AXLE ASSEMBLY 8¾" RING GEAR

## INDEX


| | Page |
|---|---|
| Axle Shafts and Bearings | 11 |
| Axle Shaft End Play | 14 |
| Differential and Carrier (Removal) | 15 |
| Differential and Carrier (Installation) | 25 |
| Differential Case | 16 |
| Drive Gear and Pinion Backlash | 24 |
| Gear Tooth Contact Pattern | 24 |
| Lubrication | 25 |
| Pinion Bearing Cup Installation | 19 |
| Pinion Bearing Preload and Pinion Setting Using Tool C-758-D-4 | 19 |
| Small Stem Pinion | 20 |
| Large Stem Pinion | 22 |
| Pinion Bearing Preload and Pinion Setting Without Using Tool C-758-D4 | 23 |
| Rear Axle Housing | 15 |


## GENERAL INFORMATION

The 8¾" Rear Axle Assembly shown in (Fig. 1), is a semi-floating type and may be divided into four subassemblies; flanged axle drive shafts with related parts (Fig. 2.) differential with drive gear, drive pinion with carrier, and the axle housing. Servicing of the above mentioned subassemblies, with exception of the axle housing may be performed without removing the complete rear axle assembly from the vehicle.

Gear ratio identification numbers will be stamped on a metal tag and attached by means of the rear axle housing-to-carrier bolt.

A Sure-Grip Differential is available in the 8¾" Axle Assembly. Refer to the "Sure Grip Differential" Section of the Axle Group for the servicing procedure.

**SHOULD THE REAR AXLE BECOME SUBMERGED IN WATER, THE LUBRICANT MUST BE CHANGED IMMEDIATELY TO AVOID THE POSSIBILITY OF EARLY AXLE FAILURE RESULTING FROM CONTAMINATION OF THE LUBRICANT BY WATER DRAWN INTO THE VENT.**

## SERVICE PROCEDURES

## AXLE SHAFTS AND BEARINGS

### *Removal*

(1) With wheels removed, remove clips holding brake drum on axle shaft studs and remove brake drum.

(2) Using access hole in axle shaft flange, remove retainer nuts, the right shaft with threaded adjuster in retainer plate will have a lock under one of the studs that should be removed at this time.

(3) Remove parking brake strut.

(4) Attach axle shaft remover Tool C-3971 (Fig. 3) to axle shaft flange and remove axle shaft. Remove brake assembly and foam gaskets.

(5) Remove axle shaft oil seal from axle housing using Tool C-637 (Fig. 4).

(6) Wipe axle housing seal bore clean and install a new axle shaft oil seal using Tool C-839 (Fig. 5).

### *Disassembly*

**CAUTION: To prevent the possibility of damaging axle shaft seal surface, slide protective sleeve SP5041**

MyMopar.com

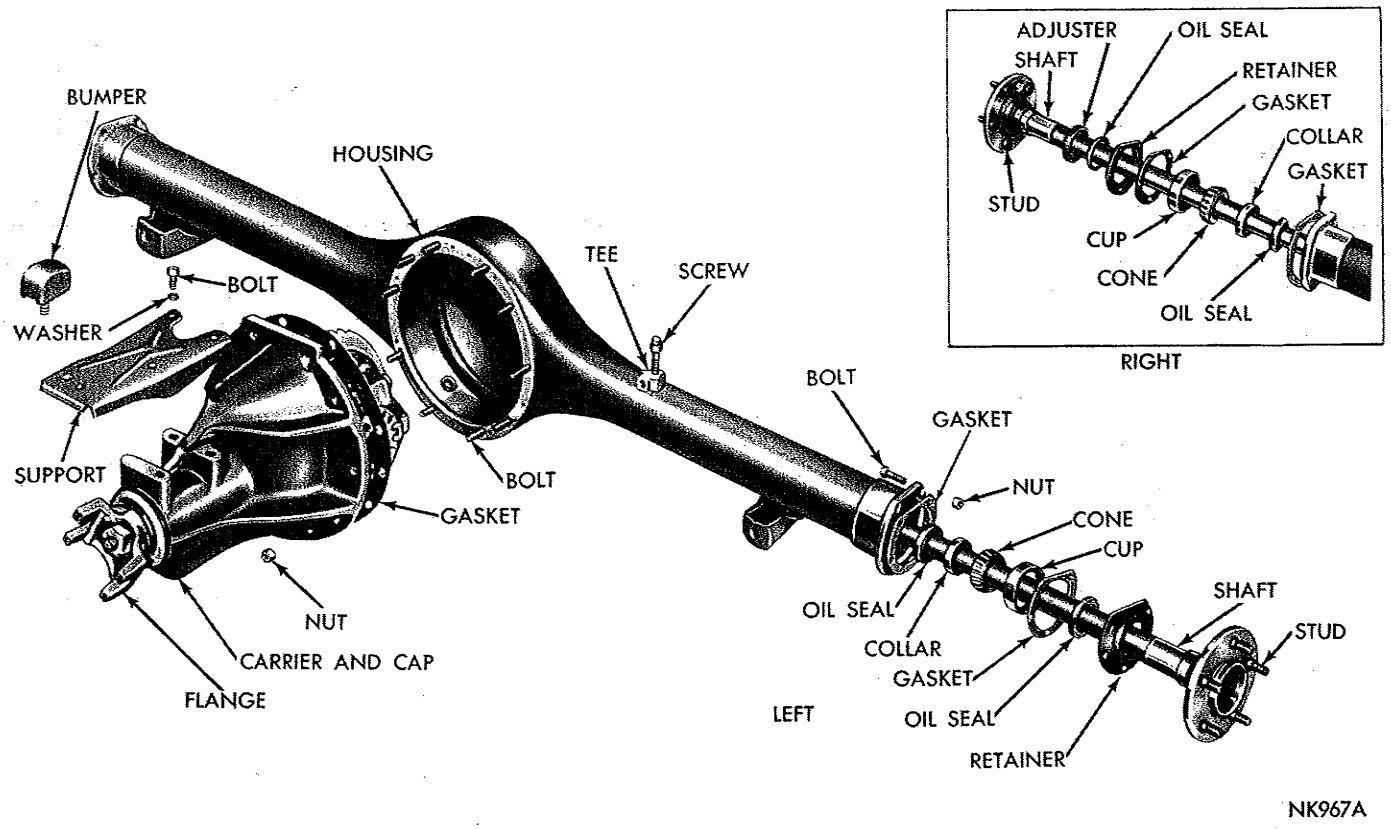


***Fig. 1—8¾" Rear Axle Assembly (Disassembled)***

**over the seal surface next to bearing collar.**

(1) Position axle shaft bearing retaining collar on a heavy vise or anvil and using a chisel, cut deep grooves into retaining collar at 90° intervals (Fig. 6). This will enlarge bore of collar and permit it to be driven off of axle shaft.

(2) Remove bearing roller retainer flange by cutting off lower edge with a chisel (Fig. 7).

(3) Grind a section off flange of inner bearing cone (Fig. 8) and remove bearing rollers (Fig. 9).

(4) Pull bearing roller retainer down as far as possible and cut with a pair of side cutters and remove (Fig. 10).

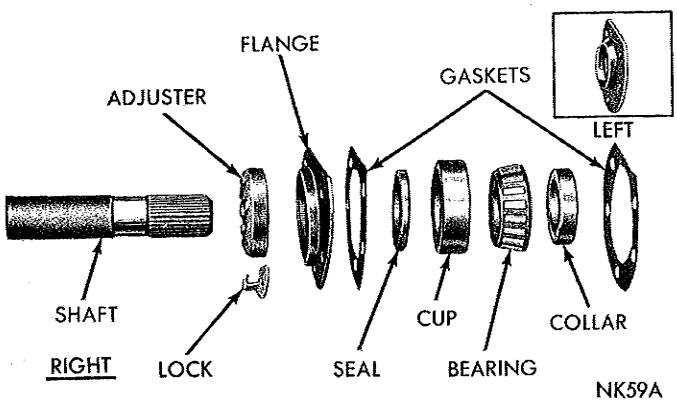


***Fig. 2—Axle Shaft Disassembled***

(5) Remove roller bearing cup and protective sleeve SP5041 from axle shaft.

**CAUTION: Sleeve SP5041 should not be used as a protector for the seal journal when pressing off the bearing cone, as it was not designed for this purpose.**

(6) To avoid scuffing seal journal when bearing cone is being removed, it should be protected by

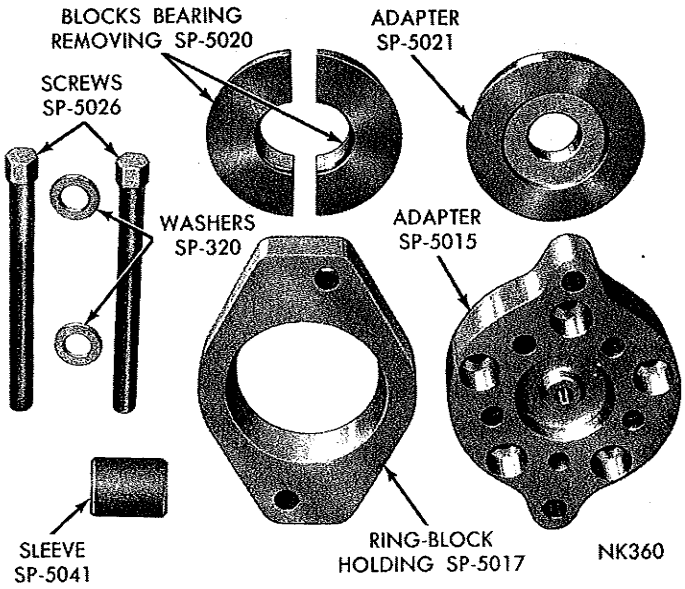


***Fig. 3—Tool Set C-3971***

MyMopar.com

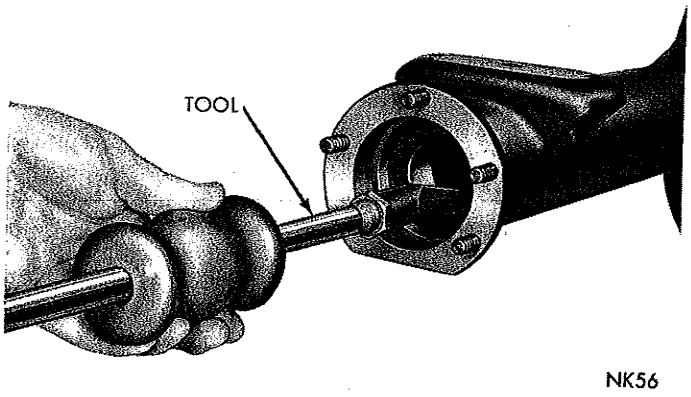


*Fig. 4—Removing Inner Seal*

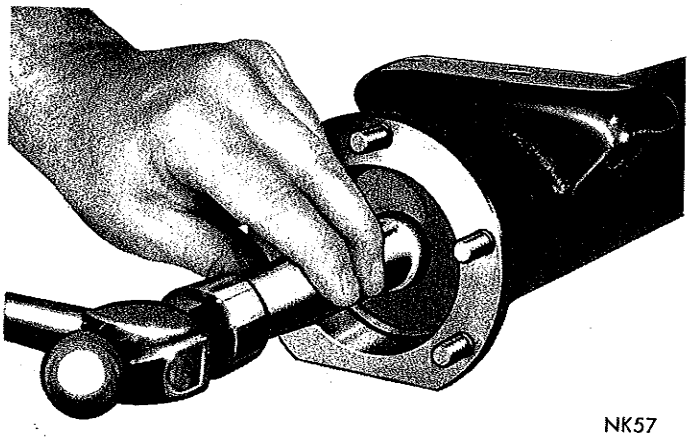


*Fig. 5—Installing Inner Seal*

single wrap of .002 thickness shimstock held in place by a rubber band (Fig. 11).

(7) Remove the bearing cone using Tool C-3971 (Fig. 3). Tighten bolts of tool alternately until cone is removed (Fig. 12).

(8) Remove seal in bearing retainer plate and replace with new seal.

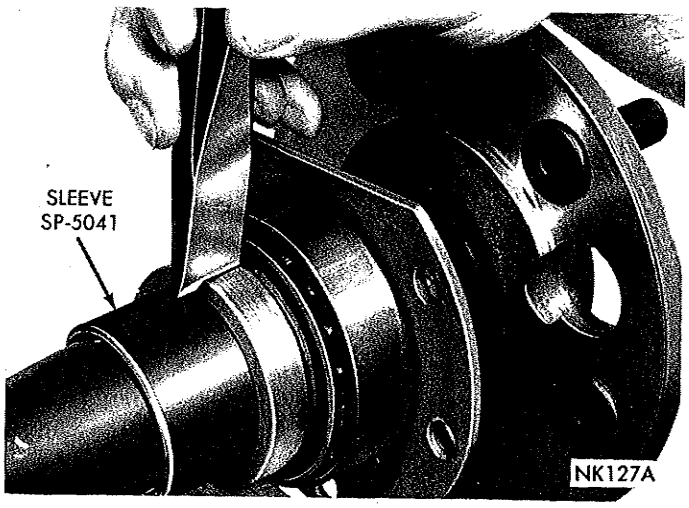


*Fig. 6—Notching Bearing Retainer Collar*

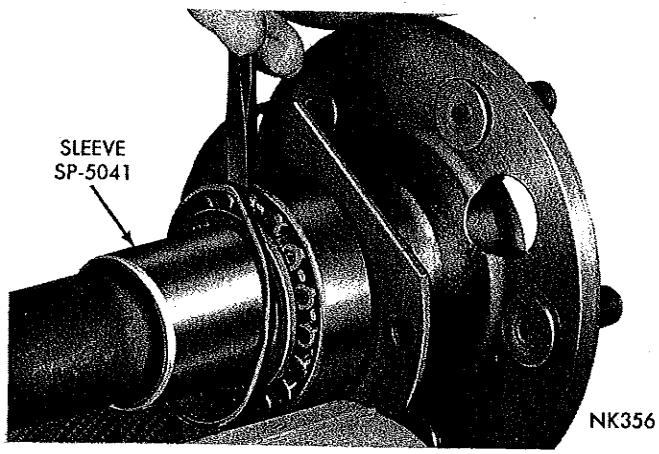


*Fig. 7—Removing the Roller Retainer*

## Assembly

(1) Install retainer plate and seal assembly on axle shaft.

(2) Install a new axle shaft bearing cup, cone and collar on shaft using Tool C-3971 (Fig. 13) and tighten

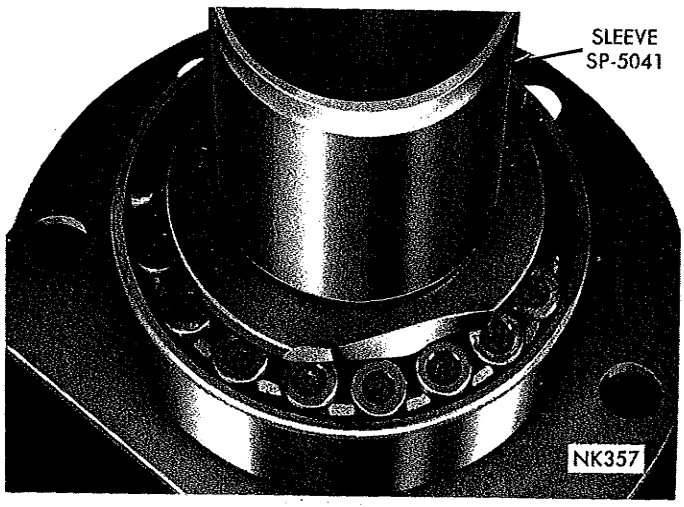


*Fig. 8—Flange Ground Off the Inner Cone*

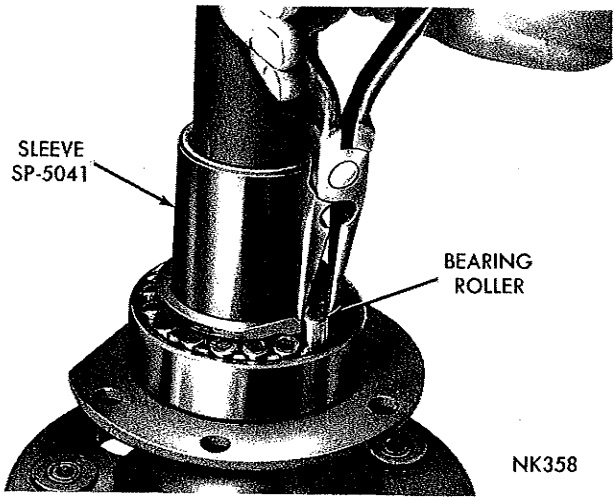


*Fig. 9—Removing the Bearing Rollers*

MyMopar.com

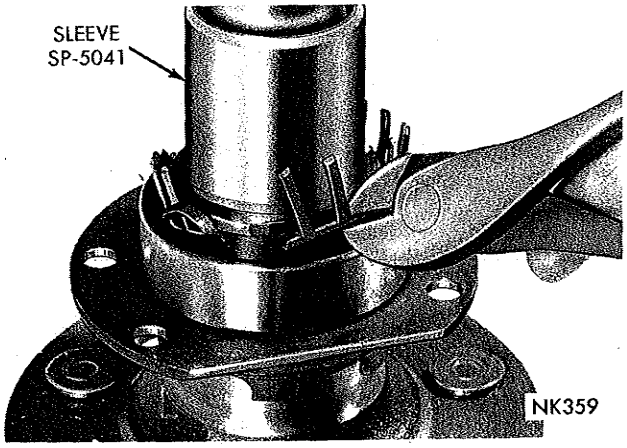


*Fig. 10—Cutting Out the Roller Bearing Retainer*

bolts of tool alternately until bearing and collar are seated properly.

(3) Inspect axle shaft seal journal for scratches and polish with #600 crocus cloth if necessary.

(4) Lubricate wheel bearings with Automotive Multi-Purpose Grease NLGI, grade 2.

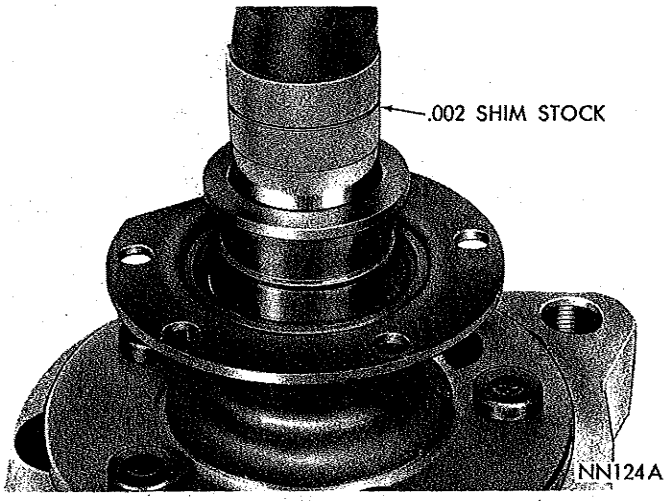


*Fig. 11—Seal Journal Protection*

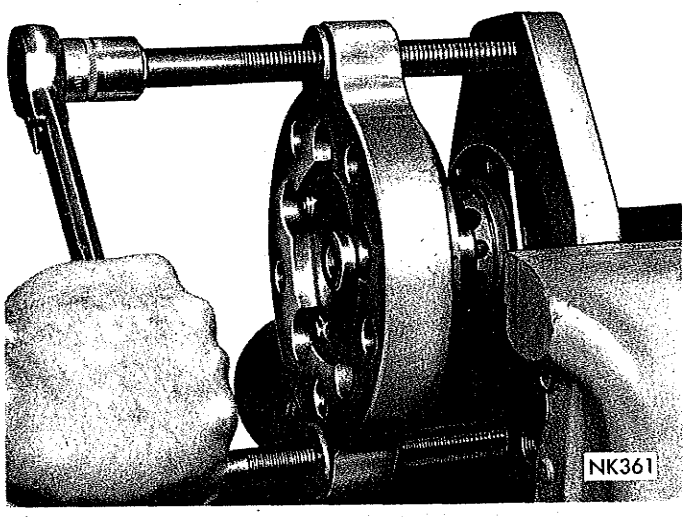


*Fig. 12—Removing the Bearing Cone with Tool C-3971*

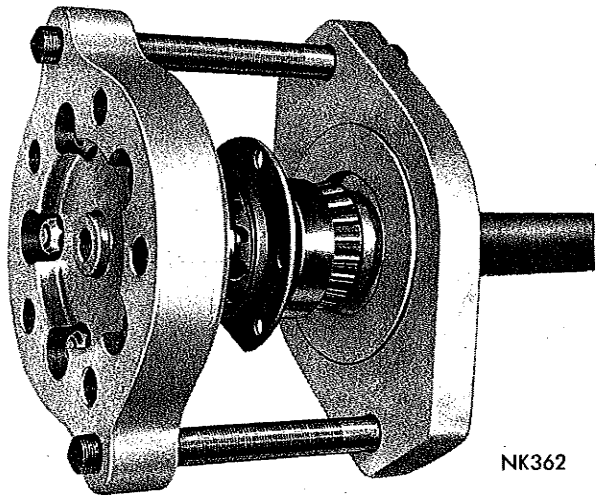


*Fig. 13—Installing New Bearing and Collar*

### *Installation*

(1) Clean axle housing flange face thoroughly and install new gasket followed by brake support plate assembly on left side of axle housing.

(2) Install foam gasket on the studs of axle housing and carefully slide axle shaft assembly through oil seal and engage splines in differential side gear.

(3) Tape end of axle shaft lightly with a non-metallic mallet to position axle shaft bearing in housing bearing bore. Position retainer plate over axle housing studs. Install retainer nuts and tighten 30-35 foot-pounds. Start by tightening bottom nut.

(4) Repeat step (1) for right side of axle housing.

(5) Back off threaded adjuster of right axle shaft assembly until inner face of adjuster is flush with inner face of retainer plate. Carefully slide axle shaft assembly through oil seal and engage splines in differential side gears.

(6) Repeat step (3).

## AXLE SHAFT END PLAY

**CAUTION: When setting axle shaft end play, both rear wheels must be off the ground, otherwise a false end play setting will occur.**

(1) Using a dial indicator mounted on the left brake support (Fig. 14), TURN THE ADJUSTER CLOCKWISE UNTIL BOTH WHEEL BEARINGS ARE SEATED AND THERE IS ZERO END PLAY IN THE AXLE SHAFTS. BACK OFF THE ADJUSTER COUNTERCLOCKWISE APPROXIMATELY FOUR NOTCHES TO ESTABLISH AN AXLE SHAFT END PLAY OF .013-.023 INCH.

(2) Tap end of left axle shaft lightly with a non-metallic mallet to seat right wheel bearing cup against adjuster, and rotate axle shaft several revolutions so that a true end play reading is indicated.

(3) Remove one retainer plate nut, install adjuster lock. If tab on lock does not mate with notch in ad-

MyMopar.com

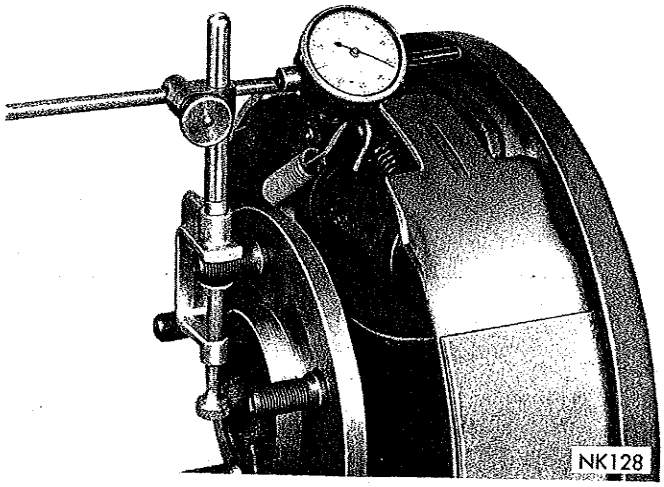


*Fig. 14—Measuring Axle Shaft End Play*

juster, turn adjuster slightly until it does. Install nut and tighten 30-35 foot-pounds.

(4) Recheck axle shaft end play. If it is not within the tolerance of .013-.023 inch, then repeat adjustment procedure.

(5) Remove dial indicator and install brake drum, drum retaining clips and wheel.

## REAR AXLE HOUSING

### Removal

Should it become necessary to remove rear axle assembly for repair proceed as follows:

(1) Raise vehicle and support body at front of rear springs.

(2) Block brake pedal in the up position using a wooden block.

(3) Remove rear wheels.

(4) Disconnect hydraulic brake hose at connection on left side of underbody.

(5) Disconnect parking brake cable.

(6) Disconnect propeller shaft at differential yoke and secure in an upright position to prevent damage to front universal joint.

(7) Remove shock absorber from spring plate studs and loosen rear spring "U" bolt nuts and remove "U" bolts.

(8) Remove the assembly from vehicle.

### Installation

(1) With body of vehicle supported at front of rear springs, position the rear axle assembly spring seats over the spring center bolts.

(2) Install spring "U" bolts and tighten nuts to 45 foot-pounds and install shock absorbers on spring plate studs. (DO NOT OVER TIGHTEN "U" BOLT NUTS.)

(3) Connect propeller shaft at differential yoke and tighten rear clamp screws to 15 foot-pounds.

(4) Connect parking brake cable.

(5) Connect hydraulic brake hose, bleed and adjust brakes.

(6) Install rear wheels.

(7) If carrier was removed from axle housing during the removal operation, fill axle with proper amount and type of lubricant; see "Specifications" in rear of "Axle" Group.

### Welding Rear Axle Housing

The axle housing should be completely disassembled if it is to be welded with arc welding equipment. It is also possible to weld the assembled housing with gas welding equipment, if precaution is taken to protect gaskets and heat treated parts.

## DIFFERENTIAL AND CARRIER

### Removal

(1) Remove flanged axle drive shafts.

(2) Disconnect rear universal joint and support propeller up and out of the way to prevent damage to the front universal joint.

(3) Remove the rear axle lubricant.

(4) Loosen and remove the carrier-to-housing attaching nuts and lift the carrier assembly from axle housing.

### Disassembly

Side play and runout check taken during disassembly will be very useful in reassembly.

(1) Mount carrier in Stand DD-1014 and attach dial indicator Tool C-430 or Tool C-3339 to differential carrier flange in a position so pointer of indicator squarely contacts back face of ring gear (Fig. 15). With a screw driver positioned between bearing cap and differential case flange, then using a prying motion determine if side play is present. If side play is evident, remove adjuster lock and loosen adjuster slightly and retighten adjuster sufficiently to eliminate side play.

(2) Rotate drive gear several complete revolutions while noting total indicator reading. Mark drive gear and differential case at point of maximum runout. The

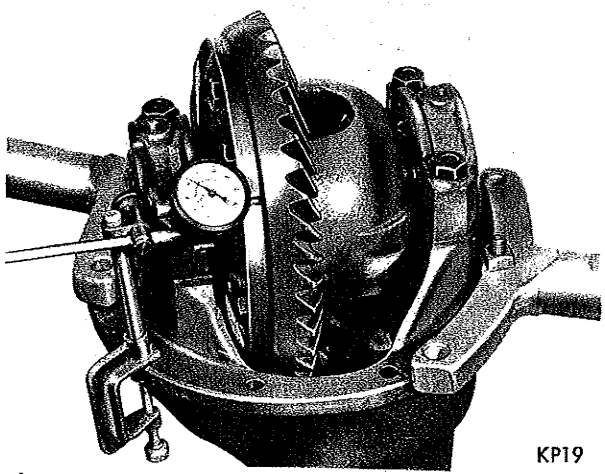


*Fig. 15—Checking for Runout and Zero End Play*

MyMopar.com

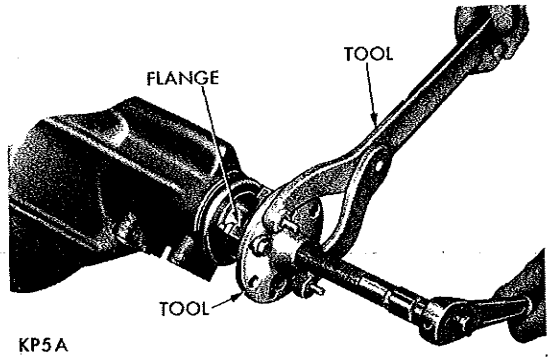


*Fig. 16—Removing Companion Flange*

marking of differential case will be very useful later in checking differential case runout. Total indicator reading should be no more than .005 inch. If runout exceeds .005 inch the differential case may be damaged, and a second reading will be required after drive gear has been removed. This operation is covered during "Differential Disassembly". Remove dial indicator.

(3) With Tool C-3281 hold companion flange and remove drive pinion nut and Belleville washer.

(4) Install companion flange remover Tool C-452 and remove flange (Fig. 16).

(5) Using a screwdriver and hammer, remove the drive pinion oil seal from the carrier.

(6) While holding one hand over nose end of carrier, invert carrier in stand. The front pinion bearing cone, shim pack and bearing spacer (where used) will drop from carrier.

(7) Apply identifying punch marks on differential bearing pedestals of carrier, differential bearing caps and bearing adjusters for reassembly purposes (Fig. 17).

(8) Remove both differential bearing adjuster lock screws and locks.

(9) With a ¾ inch socket, loosen bearing cap bolts (one on each side) and back off bearing adjusters slightly using spanner wrench Tool C-406A; to remove differential bearing preload. Remove bearing cap bolts, caps and bearing adjusters.

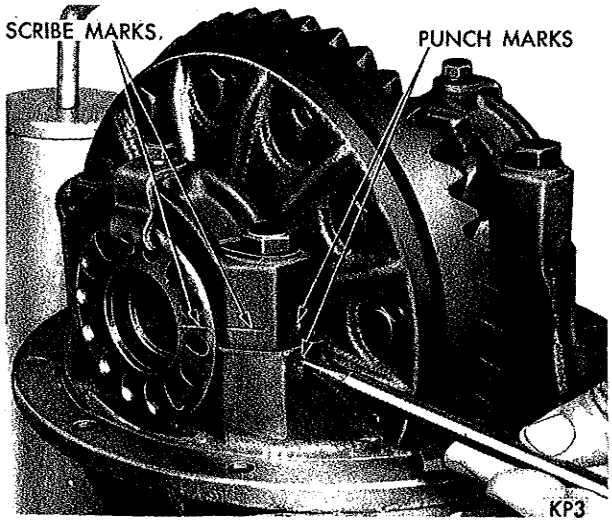


*Fig. 17—Marking Bearing Caps and Adjusters*

(10) Remove differential and ring gear assembly with bearing cups. Differential bearing cups must be kept with respective bearing cones.

(11) Remove drive pinion and rear bearing assembly from carrier.

### *Rear Pinion Bearing Removal*

(1) Remove drive pinion rear bearing from pinion with spacer (where used) with Tool C-293 and four (4) No. 36 plates, or four (4) No. 37 plates on pinion without the spacer (Fig. 18).

(2) Using a flat end brass drift, remove front and rear pinion bearing cups.

## DIFFERENTIAL CASE

### *Disassembly*

(1) Mount differential case and ring gear assembly in a vise equipped with soft jaws (brass).

(2) Remove drive gear bolts. BOLTS ARE LEFT HAND THREAD. With a non-metallic hammer, tap drive gear loose from differential case pilot and remove.

(3) If drive gear runout exceeded .005 inch in step 2 (under "Carrier Disassembly"), recheck the case as follows: Install differential case and respective bearing cups in carrier.

(4) Install bearing caps, cap bolts and bearing adjusters. Tighten bearing cap bolts down lightly and screw in both adjusters with spanner wrench Tool C-406A.

(5) Tighten cap bolts and adjusters sufficiently to prevent any side play in bearings.

(6) Attach a dial indicator Tool C-430 or Tool C-3339 to carrier flange so pointer of indicator squarely contacts drive gear surface of differential case flange between outer edge flange and drive gear

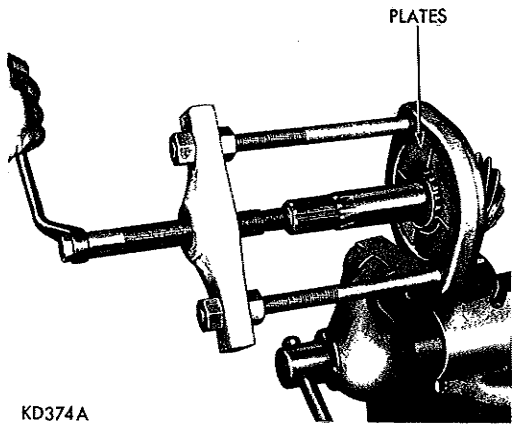


*Fig. 18—Removing Drive Pinion Rear Bearing*

MyMopar.com

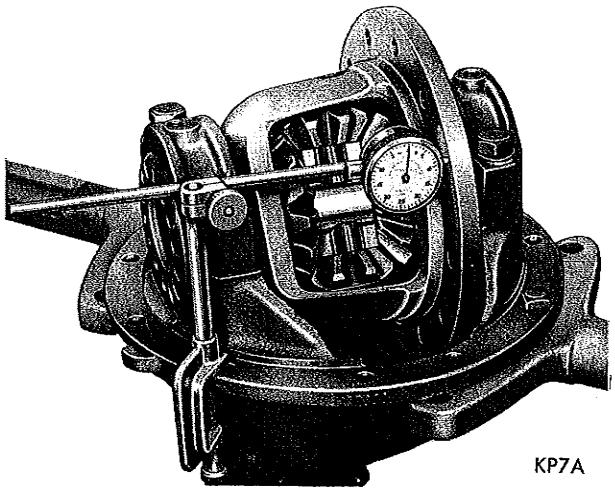


*Fig. 19—Checking Drive Gear Mounting Flange Runout*

bolt holes (Fig. 19).

(7) Rotate differential case several complete revolutions while noting total indicator reading. This reading must not exceed .003 inch runout. If runout is in excess of .003 inch, differential case must be replaced. **In a case where the runout does not exceed .003 inch it is often possible to reduce the runout by positioning the drive gear 180° from point of maximum runout when reassembling drive gear on differential case.**

(8) Using two feeler gauges of equal thickness, insert between the differential case and side gear (Fig. 20). If clearance exceeds .012 inch, install new thrust washers.

(9) With a flat nose drift and hammer, remove differential pinion shaft lock pin from back side of drive gear flange. (The hole is reamed only part way through, making it necessary to remove lock pin from one direction.)

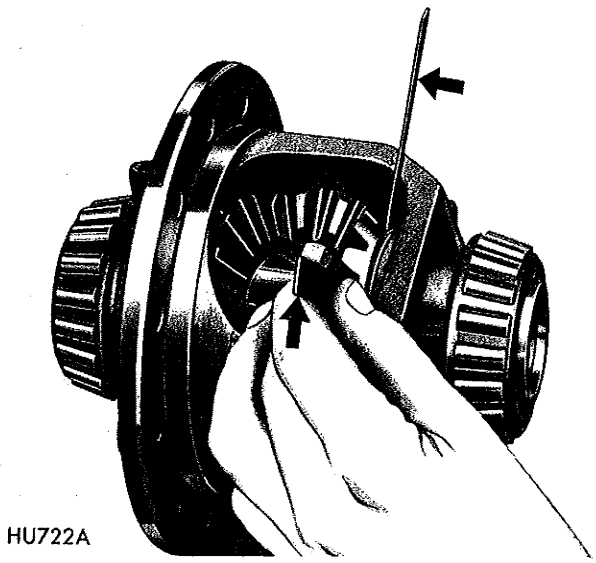


*Fig. 20—Measuring Differential Gear Clearance*

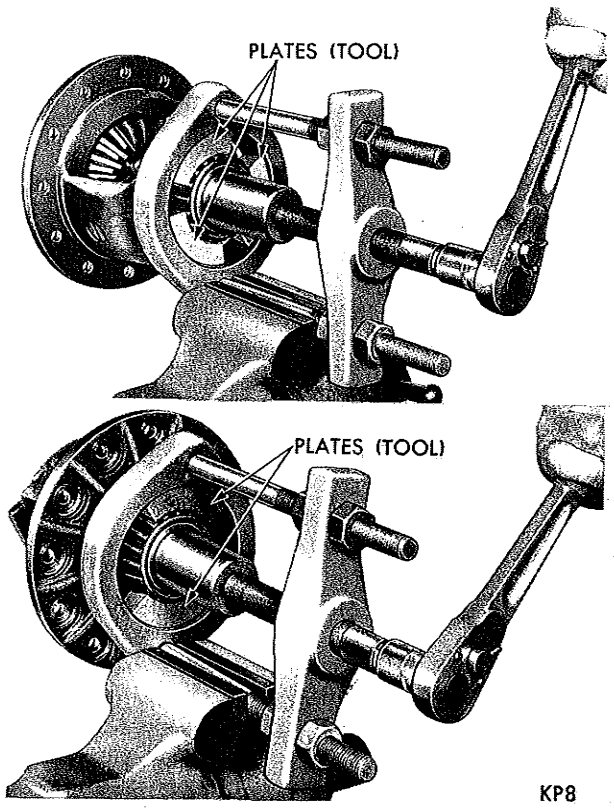


*Fig. 23—Removing Differential Bearings*

(10) With a brass drift and hammer, remove differential pinion shaft and axle drive shaft thrust block.

(11) Rotate differential side gears until each differential pinion appears at large opening of case. Remove each pinion and thrust washer at that time.

(12) Remove both differential side gears and thrust washers.

### *Cleaning and Inspection (Figs. 21 and 22)*

(1) Clean all parts in a fast evaporating mineral spirits or a dry cleaning solvent and with the exception of bearings, dry with compressed air.

(2) Inspect differential bearing cones, cups and rollers for pitting, spalling or other visible damage. If replacement is necessary, remove bearing cones from differential case with Tool C-293 and adapter plates No. 18 (Fig. 23).

(3) Inspect differential case for elongated or enlarged pinion shaft hole. The machined thrust washer surface areas and counterbores must be smooth and without metal deposits or surface imperfections. If any of the above conditions exist, satisfactory correction must be made or the case replaced. Inspect case for cracks or other visible damage which might render it unfit for further service.

(4) Inspect differential pinion shaft for excessive wear in contact area of differential pinions. Shaft should be smooth and round with no scoring or metal

MyMopar.com

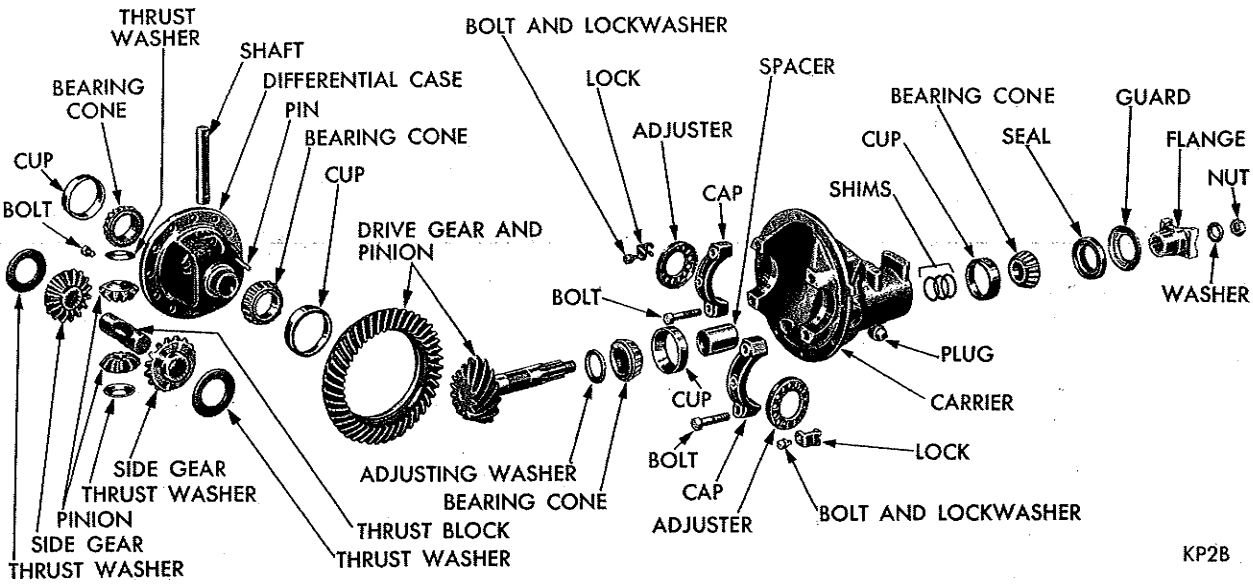


***Fig. 21—Differential Carrier Assembly (Small Pinion Disassembled)***

pickup.

(5) Inspect differential side gears and pinions, they should have smooth teeth with a uniform contact pattern without excessive wear or broken surfaces. The differential side gear and pinion thrust washers should be smooth and free from any scoring or metal pickup.

(6) Inspect axle shaft thrust block for excessive wear or visible damage. The wear surface on the opposite ends of the blocks, must be smooth.

(7) Inspect differential pinion shaft lock pin for damage or looseness in case. Replace pin or case as necessary.

(8) Inspect drive gear and pinion for worn or chipped teeth or damaged attaching bolt threads. If replacement is necessary, replace both the drive gear and drive pinion as they are available in matched sets only.

(9) Inspect drive pinion bearing cones, cups and rollers for pitting, spalling, excessive wear, or other visible damage. If inspection reveals that either are unfit for further service, replace both cup and cone.

(10) Inspect differential carrier for cracks or other visible damage which would render it unfit for further service. Raised metal on the shoulder of bearing cup bores incurred in removing pinion cups should be flattened by use of a flat nose punch.

(11) Inspect drive pinion for damaged bearings journals and mounting shim surface on excessively worn splines. If replacement is necessary, replace both the drive pinion and drive gear as they are

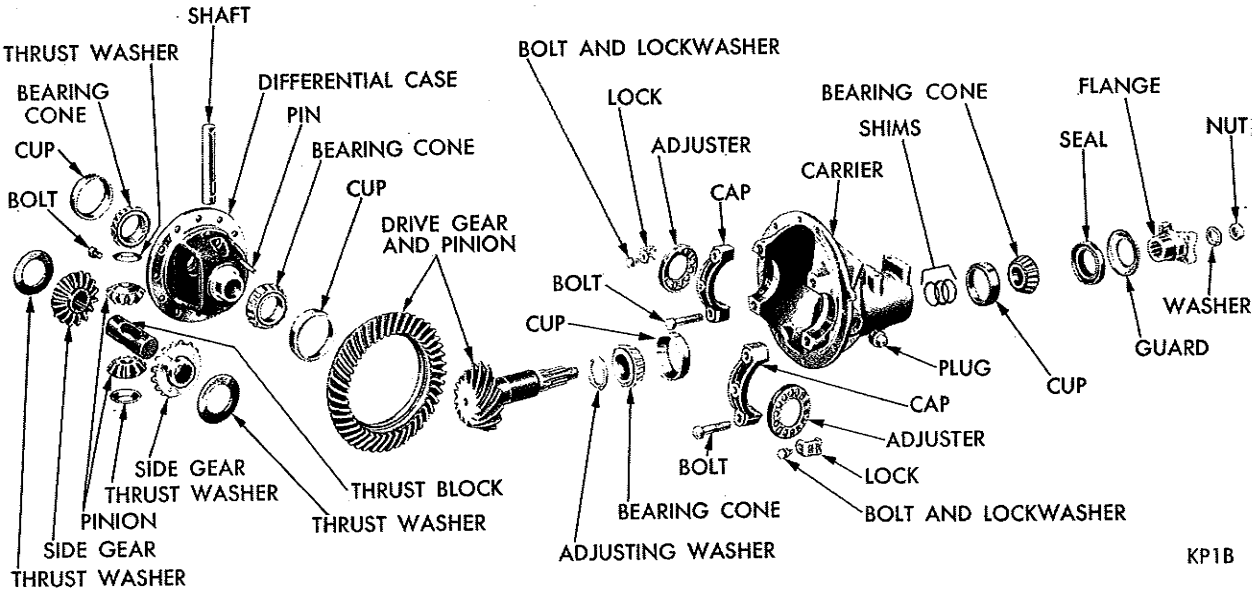


***Fig. 22—Differential Carrier Assembly (Large Pinion Disassembled)***

MyMopar.com

available in matched sets only.

(12) Inspect companion flange for cracks, worn splines, pitted, rough or corroded oil seal contacting surface. Repair or replace companion flange as necessary.

(13) Inspect drive pinion bearing shim pack for broken, damaged or distorted shims. Replace if necessary during establishment of pinion bearing preload.

## ASSEMBLY

### LUBRICATE ALL PARTS BEFORE ASSEMBLY.

(1) Install thrust washers on differential side gears and position gears in case.

(2) Place thrust washers on both differential pinions and through large window of differential case, mesh the pinion gears with the side gears, having pinions exactly 180 degrees opposite each other.

(3) Rotate side gears 90 degrees to align pinions and thrust washers with differential pinion shaft holes in case.

(4) From pinion shaft lock pin hole side of case, insert slotted end of pinion shaft through case, and the conical thrust washer, and just through one of the pinion gears.

(5) Install thrust block through side gear hub, so that slot is centered between the side gears.

(6) While keeping all of these parts in proper alignment, push pinion shaft into case until locking pin hole in pinion shaft is in exact alignment with its respective hole in case. Install pinion shaft lock pin through hole in case from pinion shaft side of drive gear flange. **The contacting surfaces of the drive gear and differential case flange must be clean and free of all burrs.**

(7) Position drive gear on differential case pilot, aligning threaded holes of drive gear with those in differential case flange.

(8) Insert drive gear screws (LEFT HAND THREADS) through case flange and into drive gear. After all cap screws are properly started, tap drive gear against differential case flange with a non-metallic mallet.

(9) Position unit between brass jaws of a vise and alternately tighten each cap screw to 55 foot-pounds.

(10) Position each differential bearing cone on hub of differential case (taper away from drive gear) and with installing Tool DD-1005, install bearing cones. An arbor press may be used in conjunction with installing tool.

**CAUTION: Never exert pressure against the bearing cage, since this would damage the bearing.**

## PINION BEARING CUP INSTALLATION

(1) Position pinion bearing cups squarely in bores of carrier. Assemble Tool C-758-D4 (Fig. 24) by placing spacer SP2919 followed by rear pinion bearing cone over main screw of tool and inserting it into carrier from gear side.

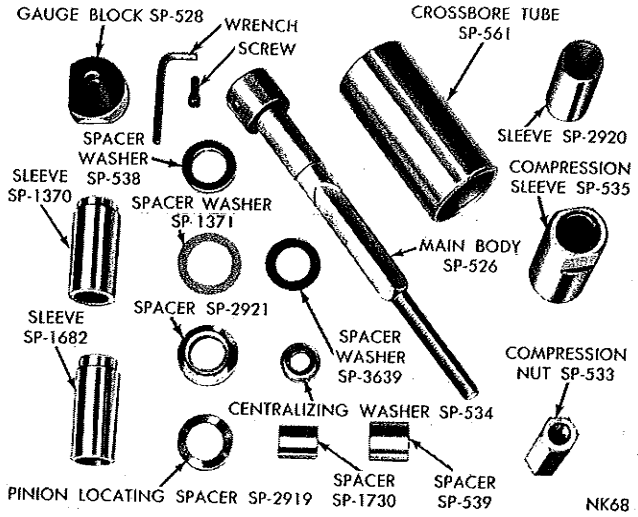


*Fig. 24—Rear Axle Setting Gauge Tool C-758-D4*

(2) Place front pinion bearing cone over main screw of tool followed by compression sleeve SP535, centralizing washer SP534, and main screw nut SP533. Hold compression sleeve with the companion flange holding Tool C-3281 and tighten nut (Fig. 25) allowing tool to rotate as nut is being tightened in order not to brinnel bearing cone or cups. **Do not remove tool after installing cups.**

## PINION BEARING PRELOAD AND DEPTH OF MESH SETTING USING TOOL C-758-D4

The 8¾" axle incorporates two types of drive pinions. The method of determining pinion depth of mesh and bearing preload are the same for both pinions; however, the sequence of making the two adjustments change. Pinions without a bearing spacer (large pinion) require the depth of mesh adjustment first, while pinions with a separate bearing spacer (small pinion) require the bearing preload adjustment first.

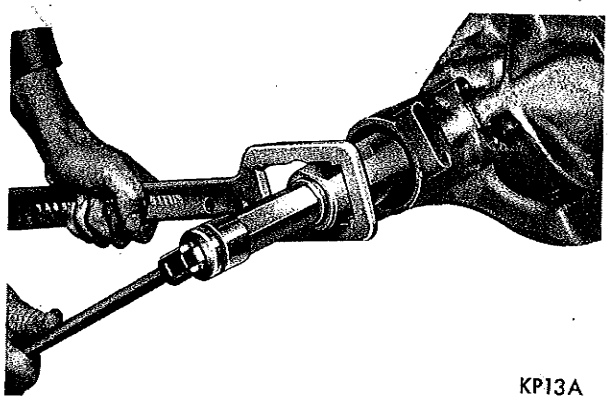


*Fig. 25—Seating the Bearing Cups in Carrier Housing*

MyMopar.com

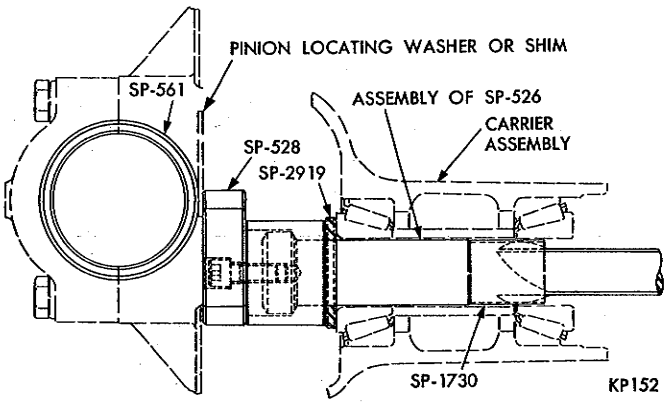


*Fig. 26—Pinion Preload with Spacer (8¾" Ring Gear)*

The position of the drive pinion with respect to the drive gear (depth of mesh) is determined by the location of the bearing cup shoulders in the carrier and by the portion of the pinion in back of the rear bearing. The thickness of the rear pinion bearing mounting shim suitable for the carrier can be determined by using Tool C-758-D4.

## PINION BEARING PRELOAD WITH BEARING SPACER (Small Stem Pinion)

### *Bearing Preload*

(1) With tool installed in carrier, remove main screw nut, centralizing washer, compression sleeve and front pinion bearing cone.

(2) Install the pinion bearing spacer, larger bore of spacer next to rear bearing.

(3) Position sleeve (SP1730) in front bearing cone making sure sleeve is flush with rear of bearing.

(4) Position original shims, previously removed from drive pinion stem, over the sleeve and slide the sleeve, bearing and shims over main screw of tool until shims rest against spacer (Fig. 26).

(5) Install tool compression sleeve (SP535) (square end out), centralizing washer (SP534) and main screw nut (SP533). Turn carrier in stand to bring nut on top.

(6) Tighten tool nut to 240 foot-pounds with a torque wrench, using holding Tool C-3281 on the compression sleeve to hold the assembly in several positions to make a complete revolution while tightening. Remove holding tool and rotate the pinion several revolutions in both directions to align the bearing rollers. Recheck torque to 240 foot-pounds (torque may have diminished as bearing rollers were aligned by rotating). **Correct bearing preload reading can only be obtained with nose of carrier up.**

(7) Using inch-pound torque wrench C-685, measure pinion bearing preload by rotating pinion with handle of wrench floating, read the torque while wrench is moving through several complete revolutions. Correct preload setting is 20-30 inch-pounds for a new bearing and 0-15 inch-pounds for original bearing. Bearing preload should be uniform during complete revolution. A reading that varies considerably during rotation of pinion indicates a binding condition which requires correction. **Use a thinner shim pack to increase preload and a thicker shim pack to decrease preload.** Preload shims are available in two thousandths of an inch increments from .014-.026 inch.

After correct pinion bearing preload is set, **DO NOT REMOVE THE TOOL.**

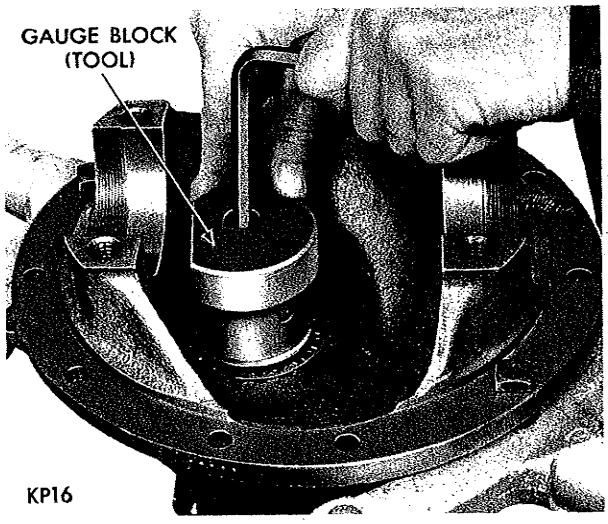


*Fig. 27—Installing Gauge Block on Tool*

### *Depth of Mesh*

(1) Reverse carrier in stand and install gauge block SP528 on end of tool and securing it to tool with Allen screw. The flat portion of gauge block should be facing differential bearing pedestals (Fig. 27). Tighten screw with Allen wrench.

(2) Position arbor SP561 (part of Tool C-758-D4) in differential bearing pedestals of carrier (Fig. 28). Center the arbor so that an approximate equal distance is maintained at both ends. Position differential bearing caps and attaching bolts on carrier pedestals, and insert a piece of .002 inch shim stock between arbor and each cap. Tighten cap bolts to 10 foot-pounds.

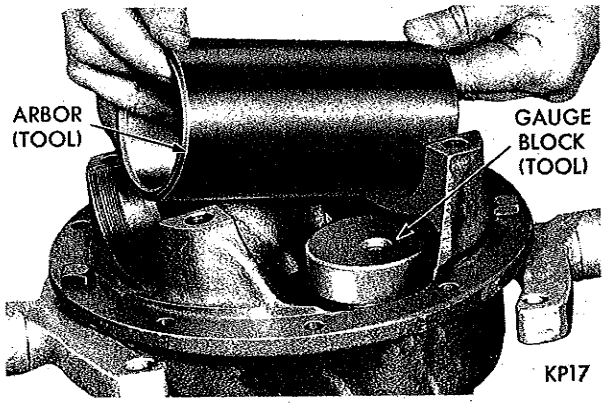


*Fig. 28—Installing Arbor in Carrier*

MyMopar.com

(3) Select a rear pinion bearing mounting shim which will fit between cross arbor and gauge block. This fit must be snug but not too tight (similar to the pull of a feeler gauge) (Fig. 29). This shim is then used in determining the correct thickness shim for installation.

(4) To select a shim for installation, read the marking on end of pinion head (−0, −1, −2, +1, +2 etc.). When marking is −(minus), add that amount to the thickness of shim selected in step (3). When the marking is + (plus), subtract that amount. Example: With a shim .086 inch thick and a pinion marked −2, install a shim .088 inch thick. (.086 + .002 = .088). Example: With a shim .086 inch thick and a pinion marked +2, install a washer .084 inch thick, (.086 − .002 = .084) or when a shim .086 inch thick is too loose and .088 inch too tight, use .086 inch shim. Treat other pinion markings in a similar manner. Shims are available in two thousandths of an inch increments. Mounting shims differ in diameter, depending on which pinion they are used on.

(5) Remove tool arbor from carrier.

(6) Remove tool and bearings out of carrier.

(7) Remove shims, spacer, tool sleeve and rear bearing cone from tool main screw.

(8) With stem of pinion facing up, install correct shim on pinion stem. **Shims are chamfered on one side and must be installed on the pinion stem with chamfered side toward pinion head.**

(9) Position rear bearing cone on pinion stem (small side away from pinion head). Make certain that the contacting surfaces of correct shim, pinion head shim contact surface and rear bearing cone are perfectly clean and free of any foreign particles.

(10) Using installing Tool DD-996 press bearing on pinion stem. An arbor press may be used in conjunction with tool.

(11) Install bearing tubular spacer on pinion stem (large bore facing rear bearing cone).

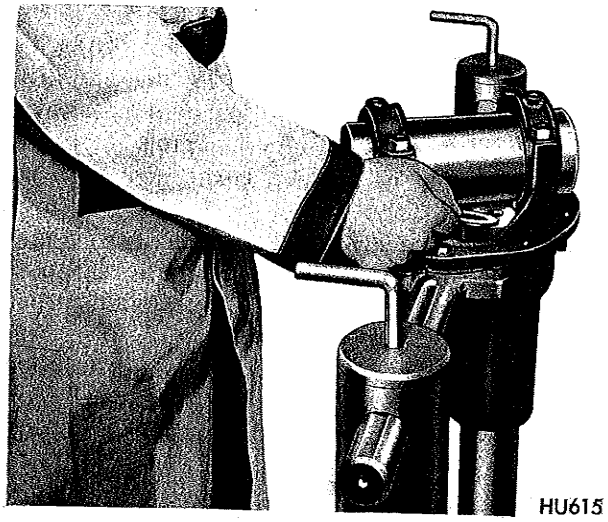


*Fig. 29—Determining Spacer Thickness*

(12) Install selected shim pack.

(13) Lubricate front and rear pinion bearing cones with Multi-Purpose Gear Lubricant.

(14) Position front pinion bearing cone in its cup in carrier.

(15) Install drive pinion oil seal into carrier using Tool 3980. Lip of seal must face front bearing. Tool 3980 **MUST BE USED** in order to position the seal the proper depth into the carrier.

(16) Insert drive pinion and bearing assembly up through carrier. While supporting pinion in carrier, install companion flange with installing Tool C-496 or DD-999 and holding Tool C-3281.

(17) Remove tools and install Belleville washer (convex side of washer up) and pinion nut.

(18) Hold companion flange with holding Tool C-3281 and tighten pinion nut to 240 foot-pounds. Rotate pinion several revolutions in both directions to align bearing rollers. Recheck torque to 240 foot-pounds (torque may have diminished as bearing rollers were aligned by rotating).

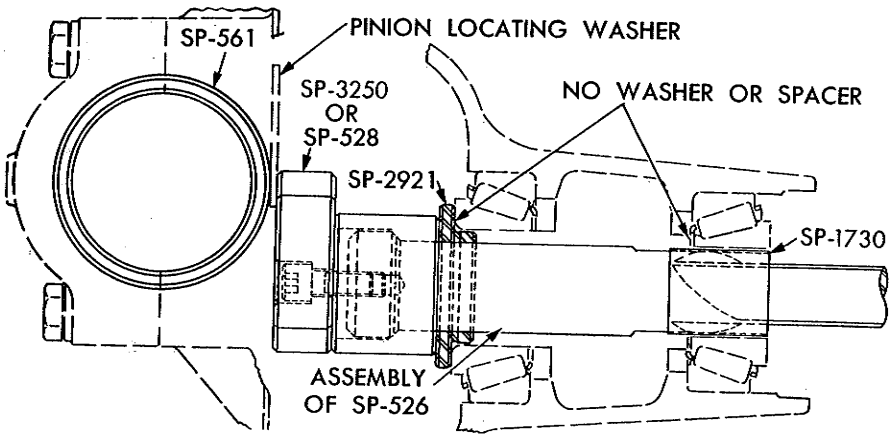


*Fig. 30—Tool C-758-D4 Installed in Housing (8¾" Large Pinion)*

MyMopar.com

## PINION BEARING PRELOAD WITHOUT BEARING SPACER (Large Stem Pinion)

Inspect bearing cups and carrier for grit and dirt or other foreign material. Clean all parts in a fast evaporating mineral spirits or a dry cleaning solvent and with the exception of bearing cones, dry with compressed air.

(1) Assemble spacer SP2921 to main section of tool followed by spacer SP1730. Install rear pinion bearing cone over spacer SP1730 and against spacer SP2921 (Fig. 30).

(2) Insert assembly into carrier and install front pinion bearing cone over tool shaft and in its proper position in bearing cup. Install tool spacer, tool thrust washer and tool nut on shaft.

(3) With nose of carrier up, place flange holding Tool C-3281 on compression sleeve. Allow assembly to rotate while tightening nut to not more than 25-50 foot-pounds. **Always make sure bearing cones are lubricated with hypoid gear lubricant.**

(4) Turn tool several complete revolutions in both directions to permit bearing roller to seat. After bearing rollers are properly seated, check bearing preload by rotating tool with an inch-pound torque wrench. The correct bearing preload should be from 20-30 inch-pounds for new bearings and 0-15 inch-pounds for the original bearings.

(5) With proper bearing preload set, invert carrier in stand and install gauge block SP528 or SP3250 to the main screw attaching it with Allen screw securely (Fig. 27). The flat portion of gauge block should be facing differential bearing pedestals.

(6) Position tool arbor SP561 in differential bearing pedestals of carrier (Fig. 28). Center the arbor so that an approximate equal distance is maintained at both ends. Position differential bearing caps and attaching bolts on carrier pedestals, and insert a piece of .002 inch shim stock between arbor and each cap. Tighten cap bolts to 10 foot-pounds.

(7) Select a rear pinion bearing mounting shim which will fit between cross arbor and gauge block. This fit must be snug but not too tight (similar to the pull of a feeler gauge. (Fig. 29). This shim is then used in determining the correct thickness shim for installation.

(8) To select a shim for installation, read the marking on end of pinion head (−0, −1, −2, +1, +2, etc.). When marking is −, (minus) add that amount to the thickness of shim selected in step (7). When the marking is + (plus), subtract that amount. Example: With a shim .086 inch thick and a pinion marked −2, install a shim .088 inch thick (.086 + .002 = .088). Example: With a shim .086 inch thick and a pinion marked +2, install a washer .084 inch thick, (.086 − .002 = .084) or when a shim .086 inch thick is too loose and .088 inch too thick, use .086 inch shim. Treat other pinion markings in a similar manner. Shims are available in two thousandths of an inch increments. Mounting shims differ in diameter, depending on which pinion they are used on.

(9) Remove differential bearing caps and remove tool arbor from carrier.

(10) Reverse carrier in stand so nut of tool is in upright position. Loosen compression nut, and support lower portion of tool in carrier with one hand, remove tool nut, centering washer and compression sleeve. Lower tool down and out of carrier.

(11) Remove front pinion bearing cone from carrier.

(12) Add rear pinion bearing shim you selected on tool between spacer SP2921 and rear pinion bearing cone. Install spacer SP1730 and insert tool in carrier.

(13) Install original preload shim pack and front pinion bearing cone and position in carrier bearing cup. Install tool compression sleeve SP535 and tool nut washer and tool nut on shaft.

(14) Using holding tool C-3281 on compression sleeve and tighten tool nut to 240 foot-pounds. Hold the assembly in several positions to make a complete revolution while tightening.

(15) Remove holding tool and rotate tool several revolutions in both directions to permit bearing rollers to seat. Recheck torque to 240 foot-pounds (torque may have diminished as bearing roller seated).

(16) Measure pinion bearing preload by rotating tool using an inch-pound torque wrench. The correct preload specifications are 20-30 inch-pounds for new bearings and 0-15 for original bearings. Correct bearing preload readings can only be obtained with nose of carrier in up right position. Bearing preload should be uniform during complete revolution. A reading that varies during rotation indicates a binding condition which should be corrected. **Use a thinner shim pack to increase preload and a thicker shim pack to decrease preload.** Preload shim are available in two thousandths of an inch increments from .014-.026 inch.

(17) Remove tool with shim pack, bearing cone, pinion mounting shim, and spacer from carrier and tool.

(18) With stem of pinion facing up, install correct shim on pinion stem. **Shims are chamfered on one side and must be installed on the pinion stem with chamfered side toward pinion head.**

(19) Position rear bearing cone on pinion stem (small side away from pinion head). Make certain that the contacting surfaces of correct shim, pinion head shim contact surface and rear bearing cone are perfectly clean and free of any foreign particles.

(20) Lubricate front and rear pinion bearing cones with hypoid gear lubricant. Install rear bearing cone onto pinion stem, and using Tool DD-996, press bearing cone into place. An arbor press may be used in conjunction with tool.

MyMopar.com

(21) Insert pinion and bearing assembly up through carrier and install the selected front pinion bearing preload shim pack followed by the bearing cone.

(22) Apply a light coat of sealer in seal bore of carrier and install drive pinion oil seal into carrier using Tool 3980. Lip of seal must face front bearing. Tool 3980 **MUST BE USED in** order to position the seal the proper depth into carrier.

(23) While supporting pinion in carrier, install companion flange with installing Tool C-496 or DD-999 and holding Tool C-3281.

(24) Remove tools and install Belleville washer (convex side of washer up) and pinion nut.

(25) Hold universal joint flange with holding Tool C-3281 and tighten pinion nut to 240 foot-pounds. Rotate pinion several revolutions in both directions to align bearing rollers. Recheck torque to 240 foot-pounds (torque may have diminished as bearing rollers were aligned by rotating).

## PINION BEARING PRELOAD AND PINION SETTING (Without Using Tool C-758-D4)

If the differential assembly was satisfactorily quiet before being disassembled, the drive pinion may be assembled with the original mounting shim and preload shim pack. If replacement parts are installed, a complete readjustment is necessary; the proper thickness shim must be installed between the pinion and rear bearing. The drive gear and pinion are manufactured and lapped in matching sets and are available in matched sets only. The adjustment position in which the best tooth contact is obtained is marked on the end of the pinion head.

To obtain the proper pinion setting in relation to the drive gear, the correct thickness mounting shim must be selected before the drive pinion is installed in the carrier. The pinion bearing mounting shims are available in two thousandths increments from .084 to .100 inch. To select the proper thickness shim, proceed as follows: It will be noted that the head of the drive pinion is marked with a plus (+) or minus (−) sign followed by a number ranging from 1 to 4, or zero (0) marking.

### *Depth of Mesh*

If the old and new pinion have the same marking and if the original bearing is being reused, use a mounting shim of the same thickness. But if the old pinion is marked zero (0) and the new pinion is marked +2, try a .002 inch thinner shim. If the new pinion is marked −2, try a .002 inch thicker shim.

### *Pinion Bearing Preload*

If the bearings are being replaced, place the new bearing cup in position in the carrier and drive the cups in place with a suitable drift. After properly positioning the bearing cups in the carrier, assemble the drive pinion mounting shim (chamfered side down toward gear) on the drive pinion stem. Install the tubular spacer (if so equipped) and the preload shims on the pinion stems. Insert the pinion assembly into the carrier. Install the front pinion bearing cone, universal joint flange, Belleville washer (convex side of washer up) and nut. DO NOT INSTALL THE OIL SEAL. Rotate the drive pinion after tightening the flange nut to 240 foot-pounds, to properly seat the bearing rollers in the bearing cups. The preload torque required to rotate the pinion with the bearings oiled should be 20-30 inch-pounds for new bearings and 0—15 inch-pounds for used bearings. **Use a thinner shim pack to increase preload and a thicker shim pack to decrease preload.** After the correct pinion depth of mesh has been established and correct bearing preload obtained, remove the drive pinion flange. Install the oil seal with Tool 3980. Install the pinion flange, washer and nut and tighten the nut to 240 foot-pounds.

### *Installation of Differential and Ring Gear in Carrier*

(1) Holding differential and ring gear assembly with bearing cups on respective bearing cones, carefully install the assembly into carrier.

(2) Install differential bearing caps, on respective sides, making certain that identification marks on caps correspond with those on carrier. Install cap bolts and tighten bolts of each cap by hand.

(3) Install differential bearing adjusters, on respective sides, making certain that identification marks correspond. Screw adjuster in by hand. No attempt should be made to apply any excessive pressure at this time.

(4) Using spanner wrenches Tool C-406A to square bearing cups with bearing cone, turn adjusters "IN"

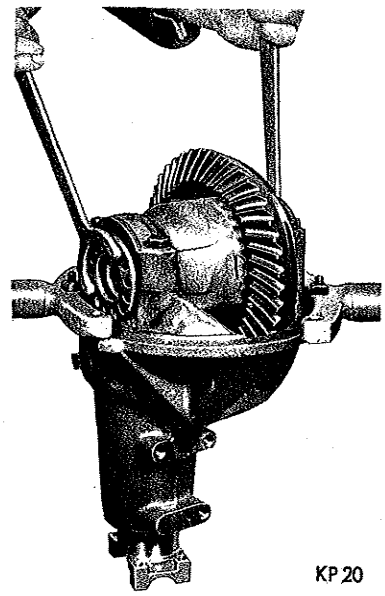


***Fig. 31—Adjusting Differential Bearings***

MyMopar.com

until cups are properly square with bearings and end play is eliminated with some backlash existing between the drive gear and pinion (Fig. 31).

(5) Tighten one differential bearing cap bolt on each side to 85-90 foot-pounds.

## DRIVE GEAR AND PINION BACKLASH

Correct drive gear and pinion backlash when properly set is .006 to .008 inch at point of minimum backlash.

(1) Attach a dial indicator Tool C-340 or C-3339 to carrier flange so pointer of indicator is squarely contacting one drive gear tooth (drive side) (Fig. 32).

(2) Measure backlash between drive gear and pinion at four positions, approximately 90 degrees apart. After point of least backlash has been determined, mark drive gear. **Do not rotate drive gear from point of least backlash until all adjustments have been completed.**

(3) Using Tool C-406A (spanner wrench) turn both bearing adjusters equally (in same direction) until backlash between drive gear and pinion is .0005 to .0015 inch. **This backlash variation is given to permit alignment and installation of the bearing adjuster lock, lockwasher and attaching screw. The adjuster must only be turned in a clockwise direction and under no circumstances should be backed off.**

(4) Install adjuster lock on bearing cap, back-face side of drive gear. Tighten lock screw to 15 to 20 foot-pounds.

### *Differential Bearing Preload*

(1) Turn bearing adjuster (tooth side of drive gear) (Fig. 32) in a notch at a time (notch referred to is the adjuster lock holes) until backlash between drive gear and pinion is a minimum of .006 to .008 inch. This will preload differential bearings and establish correct backlash.

(2) Tighten the remaining two differential bearing cap bolts to 85-90 foot-pounds.

(3) Install remaining adjuster lock, lockwasher and attaching screw. Tighten to 15-20 foot-pounds.

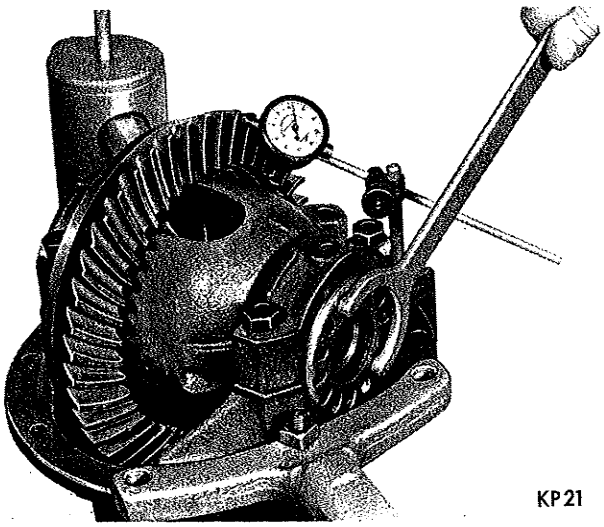


*Fig. 32—Measuring Backlash Between Drive Gear and Pinion*

## GEAR TOOTH CONTACT PATTERN

The gear tooth contact pattern (Fig. 33) will disclose whether the correct rear pinion bearing mounting shim has been installed and the drive gear backlash set properly. (Refer to Fig. 33 for various gear tooth contact patterns.)

### *Obtaining Tooth Contact Pattern*

Apply a thin film of red lead on drive and coast side of drive gear teeth. Using a round bar apply a load against the back of the drive gear. As this load is being applied to the drive gear, rotate the pinion several revolutions in both directions. This action will leave a distinct contact pattern on both the drive and coast side of the drive gear teeth. Compare the patterns on the drive gear teeth with those in Fig. 33 to determine if all adjustments have been properly made.

### *Correct Adjustment - Proper Tooth Contact*

With all the adjustments properly made, correct tooth contact (Fig. 33) will result. Notice that the correct contact pattern is well centered on both drive and coast sides of the teeth. When tooth contact patterns are obtained by hand, they are apt to be rather small. Under the actual operating load, however, the contact area increases.

If improper tooth contact is evident, the pinion must be readjusted by either increasing or decreasing

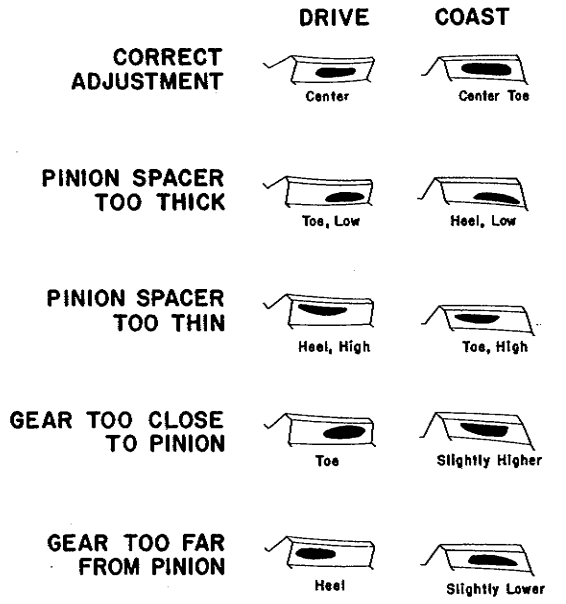


1. PINION SPACER CHANGES AFFECT THE COAST SIDE CONTACT FASTER THAN THE DRIVE SIDE
2. BACKLASH ADJUSTMENTS AFFECT THE DRIVE SIDE CONTACT MUCH FASTER THAN THE COAST SIDE
3. ALL BACKLASH MEASUREMENTS SHOULD BE MADE AT THE POINT OF MINIMUM BACKLASH

NY1022A

*Fig. 33—Gear Tooth Contact Pattern*

MyMopar.com

the thickness of the rear pinion bearing mounting shim. Backlash between the drive gear and pinion must be maintained within the specified limits until correct tooth contact pattern is obtained.

### *Heavy Face Contact*

If the tooth pattern is across the length of the tooth face, narrow and near the top, the teeth will wear thin and roll over or score, resulting in excessive gear lash and noise. This condition is corrected by installing a thicker shim behind the rear pinion bearing.

### *Heavy Flank Contact*

If the tooth pattern is across the length of the tooth and is narrow and low on the flank, the pinion teeth will score and also result in noise. This condition is corrected by installing a thinner shim behind the rear pinion bearing.

### *Heavy Toe Contact*

If the tooth pattern is heavy on the toe of the tooth, the edges of the teeth may chip resulting in excessive damage of the entire assembly. This condition is corrected by moving the drive gear away from the pinion. This will increase the backlash making it again necessary to insert a thinner shim behind the rear pinion bearing.

### *Heavy Heel Contact*

If the tooth pattern is heavy on the heel of the teeth, the edges of the teeth may chip resulting in excessive damage to the entire assembly. This condition is corrected by moving the drive gear toward the pinion. This would result in decreasing the backlash making it again necessary to insert a thinner shim behind the rear pinion bearing.

## DIFFERENTIAL AND CARRIER

### *Installation*

(1) Thoroughly clean the gasket surfaces of the carrier and rear axle housing.

(2) Using a new gasket, install the carrier assembly into the axle housing. Tighten the carrier to axle housing nuts to 45 foot-pounds.

(3) Refer to "Installation of Rear Axle Shaft," when installing and setting axle shaft end play.

(4) Install rear universal joint of propeller shaft and tighten clamp screws to 15 foot-pounds.

(5) Remove wooden block from under brake pedal and bleed and adjust brakes.

(6) Install rear wheels and tighten to 55 foot-pounds.

## LUBRICATION

Refill axle housing and carrier assembly with multi-purpose gear lubricant as defined by MIL-L-2105B on all rear axles except those with a Sure-Grip differential, such a lubricant is available under Part Number 2585317, Hypoid Gear Lubricant.

In Sure-Grip differentials, use only the special multi-purpose gear lubricant intended for use in limited-slip differentials. Such a lubricant is available under Part Number 2585318, Special Sure-Grip Lubricant.

| Anticipated Temperature Range | Viscosity Grade |
|---|---|
| Above −10°F. | SAE 90 |
| As low as −30°F. | SAE 80 |
| Below −30°F. | SAE 75 |

**"SHOULD THE REAR AXLE BECOME SUBMERGED IN WATER, THE LUBRICANT MUST BE CHANGED IMMEDIATELY TO AVOID THE POSSIBILITY OF EARLY AXLE FAILURE RESULTING FROM CONTAMINATION OF THE LUBRICANT BY WATER DRAWN INTO THE VENT HOLE."**

# SURE-GRIP DIFFERENTIAL

## INDEX


| | Page |
|---|---|
| Assembling the Differential | 27 |
| Installing Sure-Grip Differential and Carrier Assembly | 29 |
| Lubrication | 30 |
| Sure-Grip Differential | 27 |
| Sure-Grip Differential Indentification | 25 |


## GENERAL INFORMATION

The sure-grip differential (Figs. 1, 2, 3 and 4) is similar to the conventional differential except for the addition of friction plates and Belleville plates and discs for clutching the differential case to the differential gears and a means for engaging these plates. The Belleville plates and discs accomplish a positive engagement of the clutch discs and plates at all times by placing a preload on the plates and discs. It has four pinion gears, positioned in the case by two pinion shafts which are at right angles to each other and loose fitting at their inter-section. Both ends of each shaft have two flat surfaces, or ramps, which mate with identical ramps in the differential case. There is additional clearance in the case to permit a slight peripheral movement of the ends of the pinion shafts within the case. **The servicing procedures for the sure grip differential is the same for the Plymouth and Valiant Model cars, with the exception of the clutch and disc arrangement shown in (Fig. 15, and 16).**

## SURE-GRIP DIFFERENTIAL IDENTIFICATION

Identification of sure-grip type differential assembly can be made by lifting the rear wheels off the

MyMopar.com

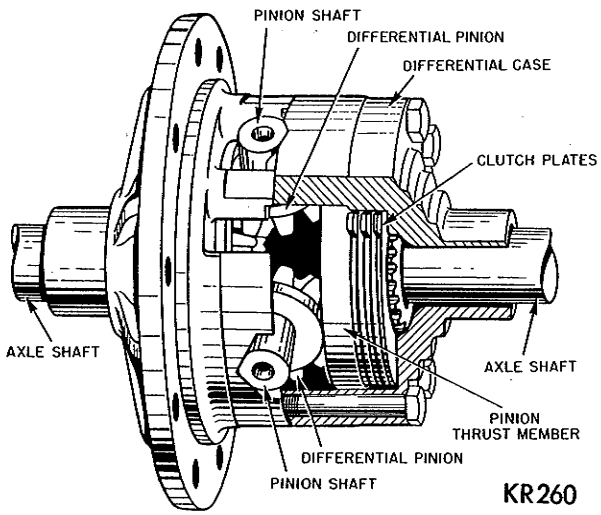


***Fig. 1—Sure Grip Differential (Schematic)***

ground and turning them. If they both turn in the same direction, the vehicle is equipped with a Sure Grip Differential. Another means of identification is a metal tag reading, "Use Sure-Grip Lube" attached by means of the rear axle housing-to-carrier bolt, below the carrier filler plug. If the tag is not apparent, remove the filler plug and use a flashlight to look up through the filler plug hole to identify the type of differential case. The sure-grip type differential case (two-piece construction) has attaching bolts. The conventional type differential case (one-piece construction) has a dome-like shape with no case cap attaching bolts.

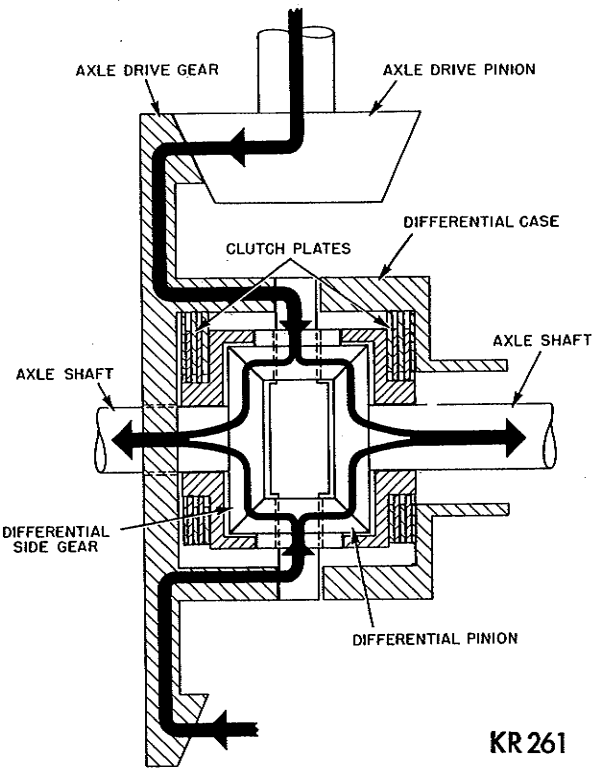


***Fig. 3—Power Flow Axle Shafts Turning at Same Speed***

Whenever the rear axle shafts have been removed from the "Sure-Grip" axle assembly, always deter-

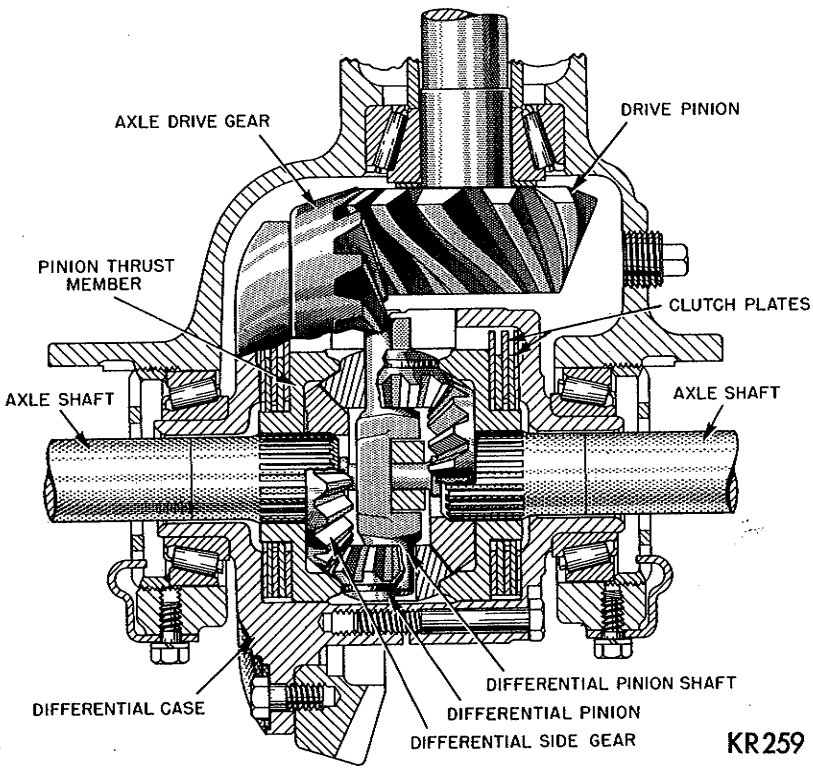


***Fig. 2—Sure Grip Differential (Cross Section View)***

MyMopar.com

mine that the thrust spacers have not fallen out of the pinion shaft (Fig. 12). The spacers may be observed through the axle shaft opening of the axle housing. This may be done with the aid of a small flashlight. If the spacers are out of place, it will be necessary to disassemble the "Sure-Grip" differential to reinstall them.

## SERVICE PROCEDURES

### SURE-GRIP DIFFERENTIAL

#### *Removal*

Follow the same procedure outlined under removal and installation of the conventional rear axle differential.

#### *Disassembly*

(1) Remove axle drive gear. Measure runout of the drive gear mounting flange. Replace both case halves if runout exceeds .003 inch.

(2) Before disassembling case halves, place scribe marks on each half to aid in aligning the case when reassembling (Fig. 5). Remove case cap attaching bolts and remove case cap (Fig. 6). Remove clutch plates (Fig. 7).

(3) Remove side gear retainer (Fig. 8), and side gear (Fig. 9).

(4) Remove pinion shafts with pinion gears (Fig. 10).

(5) Remove remaining side gear (Fig. 11), side gear retainer (Fig. 13) and clutch plates (Fig. 14).

(6) Remove axle shaft thrust spacer by pressing out lock pin (Fig. 12).

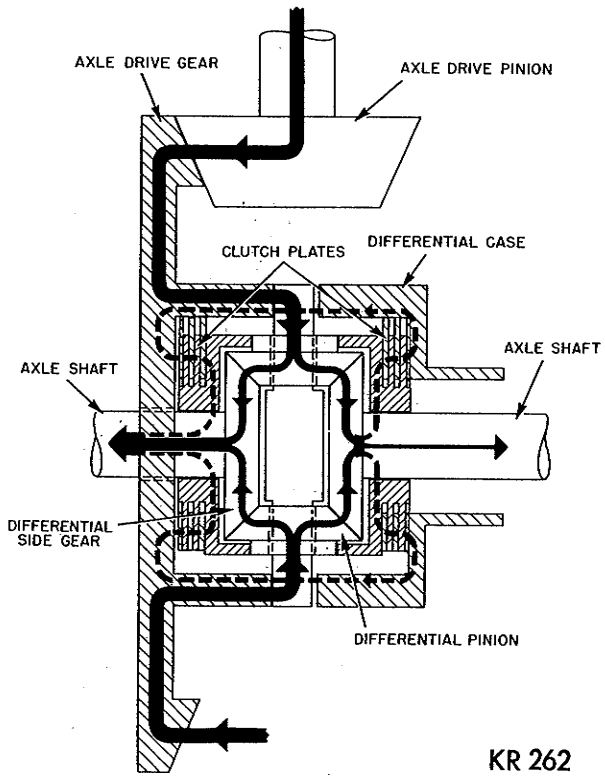


*Fig. 4—Power Flow Axle Shafts Turning at Different Speeds*

#### *Cleaning and Inspection*

Clean all parts thoroughly and inspect parts for wear, nicks and burrs. The inner and outer flat clutch plates and outer flat clutch disc should be replaced if they are worn or distorted. If either case half is worn, it will be necessary to replace both halves.

### ASSEMBLING THE DIFFERENTIAL

(1) Position clutch plates and discs in their proper location in each half of the case (Figs. 15 or 16).

(2) Place side gears in their retainers. Insert splines of retainers through the splines of clutch discs.

(3) Place aligning pin through one axle shaft thrust spacer. Assemble pinion shafts on aligning pin.

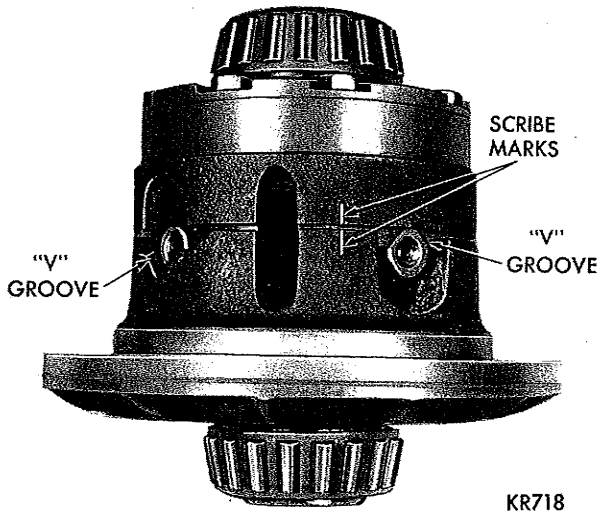


*Fig. 5—Case Halves Scribed for Proper Reassembly*

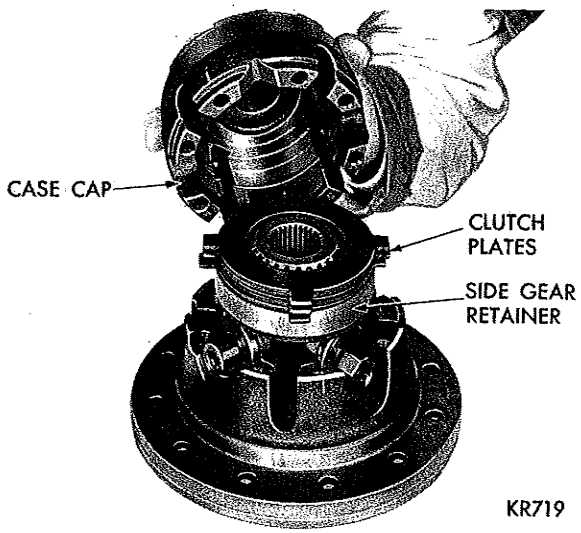


*Fig.6—Removing or Installing Differential Case Cap*

MyMopar.com

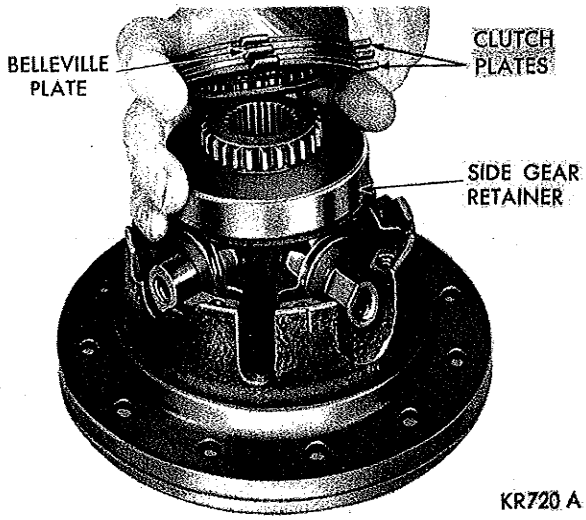


***Fig. 7—Removing or Installing Clutch Plates (Cap Side)***

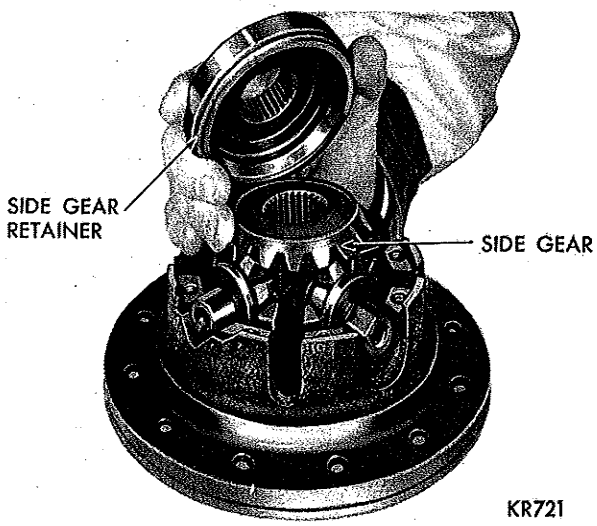


***Fig. 8—Removing or Installing Side Gear Retainer (Cap Side)***

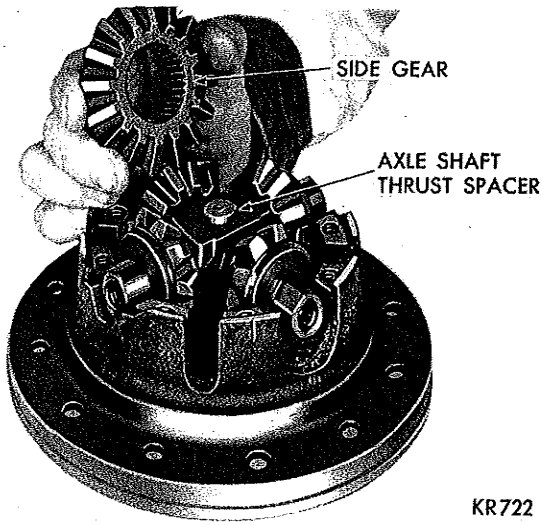


***Fig. 9—Removing Side Gear (Cap Side)***

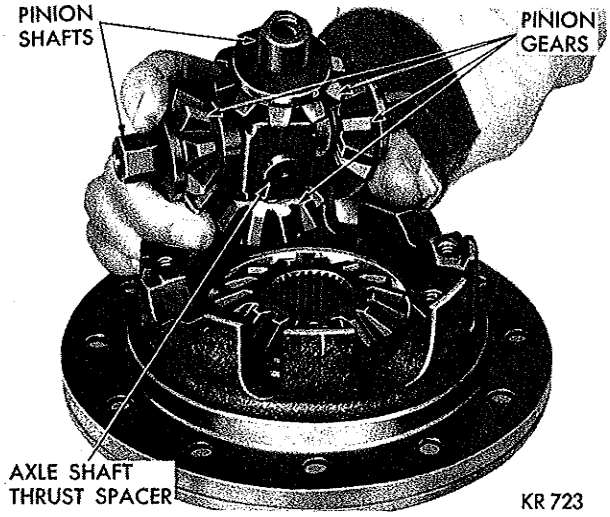


***Fig. 10—Removing or Installing Pinion Shafts and Gears***

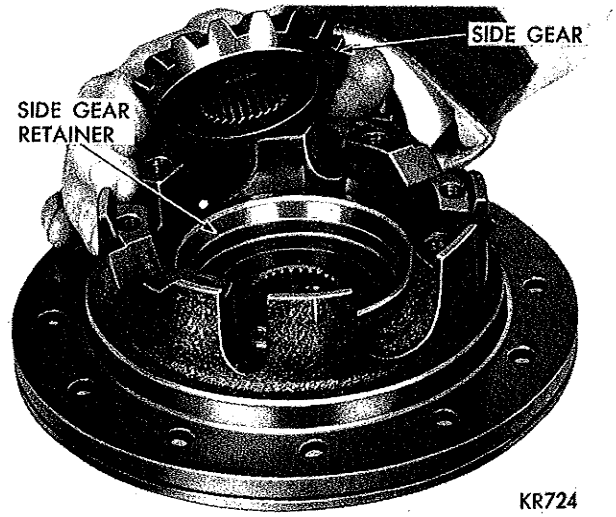


***Fig. 11—Removing or Installing Side Gear From Differential Case***

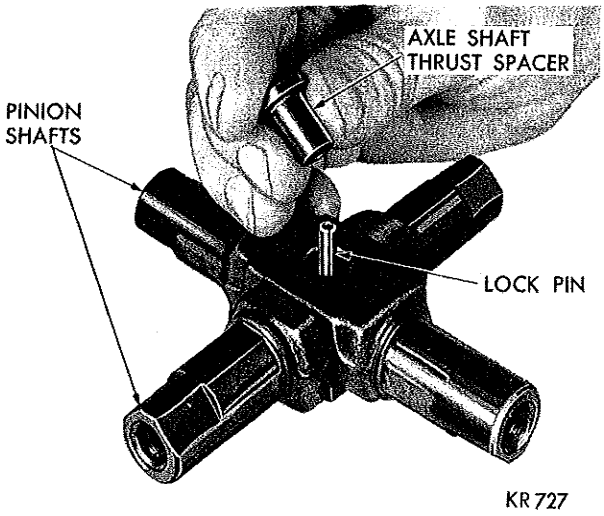


***Fig. 12—Removing or Installing Axle Shaft Thrust Spacers***

MyMopar.com

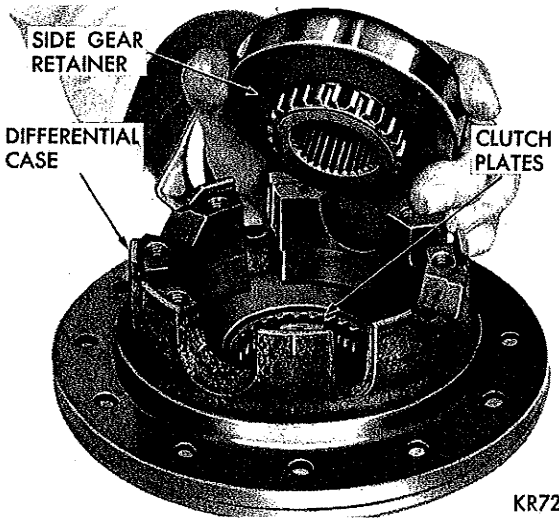


***Fig. 13—Removing or Installing Side Gear Retainer from Differential Case***

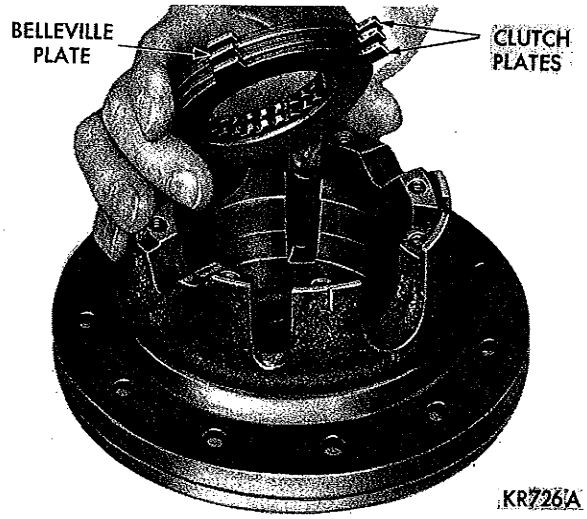


***Fig. 14—Removing or Installing Clutch Plates from Differential Case***

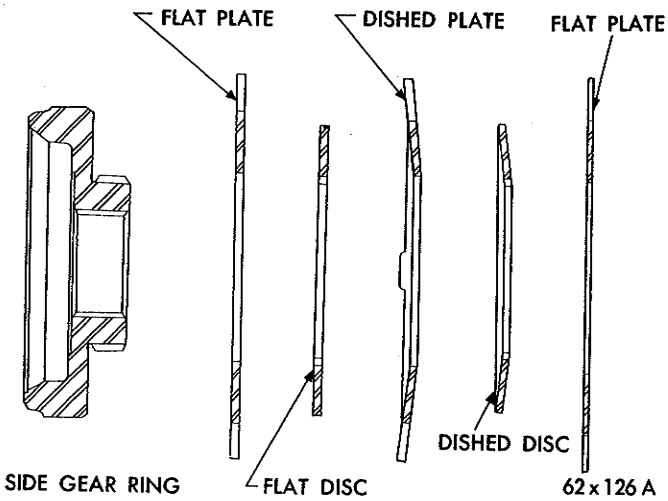


***Fig. 15—Arrangement of Plates and Discs (8¾" Differential)***

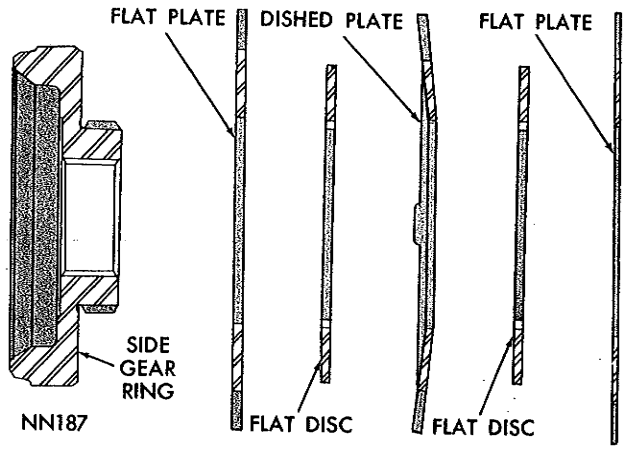


***Fig. 16—Arrangement of Plates and Discs (7¼" Differential)***

(4) Place pinion gears on shafts and install assembly in drive gear half of case. Insert the thrust spacer in pinion shaft (Fig. 12).

(5) Slide cap half of case over the edge of bench far enough to insert one finger up through the assembly to hold it together. Place the assembly on drive gear half, matching scribe marks.

(6) Make sure markings on each differential case half coincide. Install the differential case bolts and turn in a few threads.

**IMPORTANT: Insert the axle shafts from the vehicle to align the splines. Make sure the axle shafts engage the side gear splines.**

(7) With shafts installed, center the cross shafts between the two ramp surfaces in differential case. Tighten differential case bolts evenly by alternately turning opposite bolts until all are tightened to 45 foot-pounds. To keep splines of the side gear and clutch plates in exact alignment during the tightening procedure, move axle shafts back and forth as bolts are being tightened. After assembly, slight misalignments of the splines can be corrected by moving axle shafts back and forth until free. Remove axle shafts.

**Since the sure-grip clutches are preloaded by the dished plates and discs, clearance should not exist between the pinion shafts and ramps.**

(9) Follow procedures outlined in conventional axle assembly for pinion setting, drive gear backlash adjustment and bearing preload adjustment.

## INSTALLING SURE-GRIP DIFFERENTIAL AND CARRIER ASSEMBLY

(1) Using a new gasket, install carrier assembly in axle housing. Tighten mounting nuts to 45 foot-pounds.

(2) Refer to "Installation of Rear Axle Shaft," when installing axle shafts.

(3) Connect the rear universal joint.

(4) Before lowering the rear wheels of the vehicle to the floor, adjust rear brakes.

MyMopar.com

**CAUTION: Both rear wheels must be raised off the floor when adjusting brakes.**

## LUBRICATION

In Sure-Grip Differentials, use only the special multi-purpose gear lubricant intended for use in limited-slip differentials. Such a lubricant is available under Part Number 2585318, Special Sure-Grip Lubricant.

| Anticipated Temperature Range | Viscosity Grade |
|---|---|
| Above −10°F. | SAE 90 |
| As low as −30°F. | SAE 80 |
| Below −30°F. | SAE 75 |

# SPECIFICATIONS

| | VALIANT |
|---|---|
| TYPE | Semi-Floating Hypoid |
| Ring Gear Diameter | 7.25 |
| Number of Differential Pinions | 2 |
| DIFFERENTIAL BEARINGS | |
| Adjustment by | Spacer Washer |
| | .254-.284 inch in .002 inch graduations |
| Carrier Bearing Preload Spread | .003-.006 |
| PINION AND DRIVE GEAR BACK LASH | .004-.007" at point of minimum back lash |
| PINION BEARING PRELOAD ADJUSTMENT BY | Spacer Washers |
| | .074-.106 inch in .001 variations |
| PINION BEARING DRAG TORQUE | 15-25 inch-pounds |
| PINION DEPTH OF MESH ADJUSTMENT BY | Spacer Washers |
| | .084-.100 inch in .002 inch graduations |
| RUNOUT-CASE AND DRIVE GEAR | .005 inch Maximum |
| WHEEL BEARING TYPE | Single Row Sealed Ball |
| LUBRICATION | |
| Capacity | 2 Pints |

| | PLYMOUTH |
|---|---|
| TYPE | Semi-Floating Hypoid |
| Ring Gear Diameter | *(6-Cyl.) 7¼ inch |
| | (8-Cyl.) 8.75 inch |
| PINION BEARINGS | |
| Type | Tapered Roller |
| Number Used | 2 |
| Adjustment | Select Shims |
| Pre-Load Torque (Seal Removed) | 20 to 30 inch-pounds |
| DIFFERENTIAL BEARINGS | |
| Type | Tapered Roller |
| Number Used | 2 |
| Adjustment | Adjusting Nut |
| RING GEAR AND PINION | |
| Serviced in | Matched Sets |
| Ring Gear Runout | .005" Max. |
| Back Lash | .006 to .008" |
| DIFFERENTIAL SIDE GEAR CLEARANCE | |
| With Gauge | .001 to .012" |
| WHEEL BEARINGS | |
| Type | Tapered Roller |
| Adjustment | Adjusting Nut |
| End Play | .013 to .023 |
| LUBRICATION | |
| Capacity | ** 4 Pints |
| Type | Multi-Purpose Gear Lubricant as defined by MIL-L-2105B is used on all rear axles except Sure-Grip Differential; such a lubricant is available under Part No. 2585317, Hypoid Gear Lubricant. Sure-Grip Differentials use only the special Multi-Purpose Gear Lubricant intended for use in limited slip differentials. Such a lubricant is available under Part No. 2585318, Special Sure-Grip Lubricant. |

| Temperature Range | |
|---|---|
| Above −10°F | SAE 90 |
| As low as −30°F | SAE 80 |
| Below −30°F | SAE 75 |

* All Belvedere 6 Cyl. except station wagon.
** 7¼" Axles 2 pint capacity.

MyMopar.com

## AXLE RATIOS
### VALIANT

| APPLICATION | 170 Cu. In. Engine | 225 Cu. In Engine | 273 Cu. In. Engine | 273 Cu. In. Engine (2 BBL) w/4 Spd. Manual | 273 Cu. In. Engine |
|---|---|---|---|---|---|
| Manual Transmission | 3.23 | 3.23 | 2.93 | 3.23 | 3.23 |
| Optional | 2.93 3.55 | 3.55 | 3.23 3.55 | 2.93 3.55 | 2.93 3.55 |
| Automatic Transmission | 3.23 | 2.93 | 2.93 | —— | 3.23 |
| Optional | 3.55 | 3.23 3.55 | 3.23 3.55 | —— | 2.93 |
| Trailer Towing | —— | 3.23 | 3.23 | —— | —— |
| Sure-Grip | 2.93 3.23 | 2.93 3.23 | 2.93 3.23 | —— | 2.93 3.23 |

### BELVEDERE—SATELLITE

| APPLICATION | *225 Cu. In. Engine | **225 Cu. In. Engine | 273 Cu. In. Engine | 318 Cu. In. Engine | 361 Cu. In. Engine | 383 Cu. In. Engine |
|---|---|---|---|---|---|---|
| Manual Transmission | + 3.23 | 3.23 | 3.23 | 2.94 | 3.23 | 3.23 |
| Optional | 3.55 | 3.55 | 2.94 3.55 | 3.23 3.55 | 3.55 | —— |
| Automatic Transmission | + 2.93 | 2.94 | 2.94 | 2.94 | 3.23 | 3.23 |
| Optional | +3.23 3.55 | 3.23 3.55 | 3.23 | 3.23 | (x)2.94 | (x)2.94 |
| Trailer Towing | —— | —— | 3.23 | 3.23 | 3.23 | 3.23 |
| Sure-Grip | 2.94 3.23 | 2.94 3.23 | 2.94 3.23 | 2.94 3.23 | 2.94 3.23 | 2.94 3.23 |

| APPLICATION | 225 Cu. In. Engine Taxi Cab | 318 Cu. In. Engine Taxi Cab | 225 Cu. In. Engine Police | 318 Cu. In. Engine Police | 361 Cu. In. Engine Police | 383 Cu. In. Engine Police |
|---|---|---|---|---|---|---|
| Manual Transmission | 3.55 | 3.55 | 3.55 | 3.23 | —— | —— |
| Optional | —— | 2.94 | 3.23 | 3.55 | —— | —— |
| Automatic Transmission | 2.94 | 2.94 | 3.23 | 3.23 | 3.23 | 3.23 |
| Optional | 3.55 | —— | 2.94 3.55 | 2.94 | 2.94 | 2.94 |
| Sure-Grip | —— | —— | 3.23 | 3.23 | 3.23 | 3.23 |

### FURY

| APPLICATION | *225 Cu. In. Engine | **225 Cu. In. Engine | 318 Cu. In. Engine | 383 Cu. In. Engine (2 BBL) | 383 Cu. In. Engine (4 BBL) | 426 Cu. In. Engine (4 BBL) |
|---|---|---|---|---|---|---|
| Manual Transmission | 3.23 | 3.55 | 3.23 | 3.23 | 3.23 | 3.23 |
| Optional | 3.55 | —— | 3.55 | —— | —— | —— |
| Automatic Transmission | 3.23 | 3.23 | 2.94 | 3.23 | 3.23 | 3.23 |
| Optional | 2.94 | —— | 3.23 | 2.76 | 2.76 | 2.76 |
| Trailer Towing | —— | —— | 3.23 | 3.23 | 3.23 | 3.23 |
| Sure-Grip | 3.23 | 3.23 | 3.23 | 2.76 3.23 | 2.76 3.23 | 2.76 3.23 |

| APPLICATION | 225-318 Cu. In. Engine Taxi Cab | 225 Cu. In. Engine Police | 318 Cu. In. Engine Police | 383-426 Cu. In. Engine Police |
|---|---|---|---|---|
| Manual Transmission | 3.55 | 3.55 | 3.23 | 3.23 |
| Optional | —— | 3.23 | 3.55 | —— |
| Automatic Transmission | 2.94 | 3.23 | 3.23 | 3.23 |
| Optional | —— | 2.94 | 2.94 | 2.94 |
| Sure-Grip | —— | 3.23 | 3.23 | 3.23 |

* Except Station Wagon
** Station Wagon
(x) Axle Standard when air conditioning is specified. Higher ratios not available

MyMopar.com

# TIGHTENING REFERENCE

| VALIANT MODELS | POUNDS FOOT | INCH |
|---|---|---|
| Axle Shaft Retainer Nuts | 35 | |
| Differential Bearing Bolts | 40 | |
| Wheel Stud Nuts | 55 | |
| Carrier Cover Bolts | 20 | |
| Pinion Yoke Nut | 240 | (Min.) |
| Propeller Shaft Bolts—Rear | 15 | |
| Drive Gear Bolts (Left Hand Thread) | 55 | |
| Spring Clip (U Bolts) Nuts | 45 | (Max.) |

| PLYMOUTH MODELS | POUNDS FOOT | INCH |
|---|---|---|
| Brake Support Plate to Housing Mounting Bolt Nuts | 30 to 35 | |
| Differential Carrier to Axle Housing Bolt Nuts | 45 | |
| Differential Bearing Cap Bolts | 90 | |
| Rear Axle Drive Gear to Case Bolts | 55 | |
| Rear Axle Drive Pinion Companion Flange Nut | 240 | (Min.) |
| Rear Spring "U" Bolt Nuts | 50 | |
| Propeller Shaft Bolts—Rear | 15 | |
| Wheel Stud Nuts | 65 | |

MyMopar.com

# BRAKES

## CONTENTS


| | Page | | Page |
|---|---|---|---|
| DISC BRAKES (BUDD) | 32 | POWER BRAKES (KELSEY-HAYES) | 27 |
| DISC BRAKES (KELSEY-HAYES) | 41 | POWER BRAKES (MIDLAND-ROSS) | 18 |
| GENERAL INFORMATION | 1 | SERVICE BRAKES (9 INCH) | 5 |
| GENERAL SERVICE PROCEDURES | 3 | SERVICE BRAKES (10 INCH) | 9 |
| MASTER CYLINDER | 12 | SERVICE DIAGNOSIS | 1 |
| PARKING BRAKES (9 INCH) | 16 | SPECIFICATIONS | 53 |
| PARKING BRAKES (10 INCH) | 16 | WHEEL CYLINDERS | 14 |
| POWER BRAKES (BENDIX) | 24 | | |


## GENERAL INFORMATION

The 1966 Models have a self-adjusting servo contact, two shoe, internal expanding brake. The lower ends of the brake shoes are connected by a tubular star wheel adjusting screw (Fig. 1). Police cars with heavy duty brakes are not self-adjusting.

## SERVICE DIAGNOSIS

| Condition | Possible Cause | Correction |
|---|---|---|
| PEDAL GOES TO THE FLOOR | (a) Fluid low in reservoir. | (a) Fill and bleed the master cylinder. |
| | (b) Excessively worn brake lining. | (b) Reline and adjust the brakes. |
| | (c) Improperly adjusted brake. | (c) Repair or replace self-adjuster as required. |
| | (d) Leaking wheel cylinders. | (d) Recondition or replace the wheel cylinder and replace both brake shoes. |
| | (e) Loose or broken brake lines. | (e) Tighten all brake fittings or replace the brake line. |
| | (f) Air in hydraulic brake system. | (f) Fill and bleed the hydraulic brake system. |
| | (g) Leaking or worn master cylinder. | (g) Recondition or replace the master cylinder and bleed the hydraulic system. |
| SPONGY BRAKE PEDAL | (a) Air in hydraulic system. | (a) Fill the master cylinder and bleed the hydraulic system. |
| | (b) Improper brake fluid (low boiling point). | (b) Drain, flush and refill with brake fluid. |
| | (c) Excessively worn or cracked brake drums. | (c) Replace all faulty brake drums. |
| | (d) Broken pedal pivot bushing. | (d) Replace nylon pivot bushing. |
| BRAKES PULLING | (a) Incorrect brake adjustment. | (a) Adjust the brakes and check the fluid. |
| | (b) Brake drums out of round. | (b) Grind or replace the brake drums. |
| | (c) Brake shoes distorted. | (c) Replace the faulty brake shoes. |
| | (d) Contaminated lining. | (d) Replace the contaminated brake lining. |
| | (e) Unmatched brake lining. | (e) Match the primary, secondary and same type of lining on all wheels. |
| | (f) Restricted brake hose or line. | (f) Replace the plugged hose or brake line. |
| | (g) Front end out of alignment. | (g) Align the front end. |
| | (h) Broken rear spring. | (h) Replace the broken spring. |
| SQUEALING BRAKES | (a) Incorrect brake lining. | (a) Install matched brake lining. |
| | (b) Dust in brakes or scored brake drums. | (b) Blow out the brake assembly with compressed air and grind the brake drums. |
| | (c) Distorted brake shoes. | (c) Replace the brake shoes. |
| | (d) Bent support plate. | (d) Replace the support plate. |
| | (e) Broken or weak brake shoe return spring. | (e) Replace the return spring. |
| | (f) Weak or broken brake shoe retaining spring. | (f) Replace the retaining spring. |

MyMopar.com

| Condition | Possible Cause | Correction |
|---|---|---|
| | (g) Glazed brake lining. | (g) Cam grind or replace the brake lining. |
| | (h) Saturated brake lining. | (h) Replace the saturated lining. |
| **DRAGGING BRAKES** | (a) Incorrect wheel or parking brake adjustment. | (a) Adjust the brakes and check the fluid. |
| | (b) Parking brakes engaged. | (b) Release the parking brakes. |
| | (c) Weak or broken brake shoe return spring. | (c) Replace the brake shoe return spring. |
| | (d) Brake pedal binding. | (d) Free up and lubricate the brake pedal and linkage. |
| | (e) Master cylinder cup sticking. | (e) Recondition the master cylinder. |
| | (f) Incorrect master cylinder push rod adjustment. | (f) Properly adjust the master cylinder push rod. |
| | (g) Obstructed master cylinder relief port. | (g) Use compressed air and blow out the relief port. |
| | (h) Saturated brake lining. | (h) Replace the brake lining. |
| | (i) Bent or out of round brake drum. | (i) Grind or replace the faulty brake drum. |
| | (j) Incorrect cable adjustment. | (j) Adjust parking brake cables. |
| **HARD PEDAL** | (a) Incorrect brake lining. | (a) Install matched brake lining. |
| | (b) Incorrect brake push rod adjustment. | (b) Adjust the brake push rod and check the fluid. |
| | (c) Frozen brake pedal linkage. | (c) Free up and lubricate the brake linkage. |
| | (d) Restricted brake line or hose. | (d) Clean out or replace the brake line or hose. |
| | (e) Brake booster inoperative. | (e) Recondition or replace the brake booster. |
| **WHEEL LOCKS** | (a) Loose or torn brake lining. | (a) Replace the brake lining. |
| | (b) Incorrect wheel bearing adjustment. | (b) Clean, pack and adjust the wheel bearings. |
| | (c) Wheel cylinder cups sticking. | (c) Recondition or replace the wheel cylinder. |
| | (d) Contaminated brake lining. | (d) Reline both front or rears of all four brakes. |
| **BRAKES FADE (HIGH SPEED)** | (a) Incorrect lining. | (a) Replace lining. |
| | (b) Distorted or out of round brake drums. | (b) Grind or replace the drums. |
| | (c) Overheated brake drums. | (c) Inspect for dragging brakes. |
| | (d) Incorrect brake fluid (low boiling temperature). | (d) Drain, flush, refill and bleed the hydraulic brake system. |
| | (e) Saturated brake lining. | (e) Reline both front or rear or all four brakes. |
| **PEDAL PULSATES** | (a) Bent or out of round brake drum. | (a) Grind or replace the brake drums. |
| **BRAKE CHATTER** | (a) Out of round brake drum. | (a) Grind or replace the brake drum. |
| | (b) Loose support plate. | (b) Tighten the support plate bolts to the proper torque. |
| | (c) Bent support plate. | (c) Replace the support plate. |
| | (d) Distorted brake shoes. | (d) Replace the brake shoes. |
| | (e) Machine grooves in the contact face of the brake drum. | (e) Grind or replace the brake drum. |
| | (f) Contaminated brake lining. | (f) Replace either front or rear of all four brakes. |
| **BRAKES DO NOT SELF ADJUST** | (a) Adjuster screw frozen in the thread. | (a) Clean and free-up all thread areas. |
| | (b) Adjuster screw corroded at the thrust washer. | (b) Clean the threads and replace the thrust washer if necessary. |
| | (c) Adjuster lever does not engage star wheel. | (c) Repair, free up or replace adjuster as required. |

MyMopar.com

# GENERAL SERVICE PROCEDURES

## ADJUSTING THE SERVICE BRAKES

**Normally self adjusting brakes will not require manual adjustment but in the event of a brake reline it may be advisable to make the initial adjustment manually to speed up the adjusting time.**

(1) Jack up vehicle so all wheels are free to turn.

(2) Remove rear adjusting hole cover from backing plate on all of brake supports of vehicle.

(3) Be sure parking brake lever is fully released, then back off parking brake cable adjustment so there is slack in cable.

(4) Insert adjusting tool C-3784, into star wheel of adjusting screw. Move handle of tool downward until a slight drag is felt when road wheel is rotated.

(5) Insert a thin screw driver into brake adjusting hole and push adjusting lever out of engagement with star wheel. **(Care should be taken so as not to bend adjusting lever** (Fig. 1), while holding adjusting lever out of engagement, back off star wheel 10 to 12 notches to insure a free wheel with no brake shoe drag.

(6) Repeat above adjustment at each wheel. The adjustment must be equal at all wheels. Install adjusting hole covers in brake supports.

## TESTING AUTOMATIC ADJUSTER OPERATION

Place the vehicle on a hoist, with a helper in the driver's seat to apply the brakes. Remove the plug from the rear adjustment slot in each brake support plate to observe the adjuster star wheel. Then, to exclude the possibility of maximum adjustment; that is, the adjuster refuses to operate because the closest possible adjustment has been reached; the star wheel should be backed off approximately 30 notches. It will be necessary to hold the adjuster lever away from the star wheel to allow backing off of the adjustment.

Spin the wheel and brake drum in the reverse direction and apply the brakes vigorously. This will provide the necessary inertia to cause the secondary brake shoe to leave the anchor. The wrap up effect will move the secondary shoe, and the cable will pull the adjuster lever up. Upon release of the brake pedal, the lever should snap downward, turning the star wheel. Thus, a definite rotation of the adjuster star wheel can be observed if the automatic adjuster is working properly. If by the described procedure one or more automatic adjusters do not function properly, the respective drum must be removed for adjuster servicing.

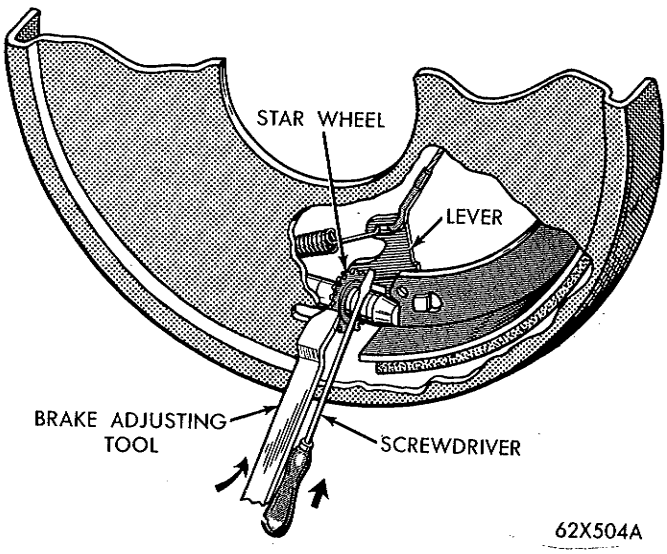


*Fig. 1—Adjusting the Brakes*

## BLEEDING THE BRAKE SYSTEM

Clean all dirt and foreign material from the cover of the master cylinder to prevent any dirt from falling into the master cylinder reservoir when the cover is removed.

Using the one man bleeder tank C-3496 (with adaptor C-3494A) provides a convenient means of keeping the master cylinder full while pressurizing the hydraulic system for bleeding. **The brakes may also be bled manually by having an assistant slowly pump the brake pedal while the brakes are being bled. Be certain to refill the master cylinder after bleeding each wheel.**

Tighten the brakes of each wheel until the brakes are locked. (This reduces the movement of the wheel cylinder cups and assists in bleeding.)

Starting with the right rear wheel clean all dirt from the bleeder valve. Place bleeder hose C-650 on the bleeder valve and insert the other end of the bleeder hose into a clean jar half filled with clean brake fluid. (This will permit the observation of air bubbles as they are being expelled from the hydraulic system and also prevent air from being drawn back in to the system as the brake pedal is released on manual bleeding.) Follow the manufacturers instructions in the use of the bleeder tools.

When manually bleeding the hydraulic system, push the brake pedal down and let it return slowly, to avoid air being drawn into the system. Bleed intermittently by opening and closing the valve about every four seconds. This causes a swirling action in the cylinder and assists in expelling the air. Continue the action until the brake fluid is expelled in a solid stream, without any bubbles.

Continue this bleeding operation on the other wheels, starting with the left rear wheel, then the right front and finishing with the left front wheel.

If necessary, repeat this bleeding operation if there

MyMopar.com

is any indication (a low, soft or spongy brake pedal) of air remaining in the hydraulic system. Readjust the brakes as described previously.

## TEST FOR FLUID CONTAMINATION

To determine if contamination exists in the brake fluid (as indicated by swollen or deteriorated rubber cups), the following test can be made.

Place a small amount of the drained brake fluid into a small clear glass bottle. Separation of the fluid into distinct layers will indicate mineral oil content. **Be safe and discard old brake fluid that has been bled from the system. Fluid drained from the bleeding operation may contain dirt particles or other contamination and should not be reused.**

## WHEEL STUD TIGHTENING

**The tightening sequence and torquing of the wheel stud nuts is of great importance to insure efficient brake operation. The use of an impact or long handled wrench may distort the drum.**

A criss-cross tightening sequence should be used (Fig. 2). Tighten all the stud nuts to one-half the specified torque first, (30 ft. lbs.), and then repeat the sequence tightening to the specified 55 foot-pounds. (65 foot pounds on 10 inch brakes.)

## BRAKE HOSE AND TUBING

The flexible hydraulic brake hose should always be installed in the vehicle by first tightening the male end of the hose in the wheel cylinder or rear axle housing tee. The hose is then clipped to the hose bracket in a manner to give minimum twist. Excessive twist can result in hose interference problems with possible hydraulic system failure.

Inspection of brake hose and tubing should be included in all brake service operations. The hoses should be checked for:

(1) Correct length, severe surface cracking, pulling, scuffing or worn spots. (Should the cotton fabric casing of the hose be exposed to weather by cracks or abrasions in the rubber hose cover, eventual deterioration of the hose can take place with possible burst failure.)

(2) Faulty installation to cause twisting, wheel, tire or chassis interference.

Always use factory recommended hose to insure quality, correct length and superior fatigue life. Care should be taken to make sure that the tube and hose mating surfaces are clean and free from nicks and burrs. New copper seal washers should be used and the tube nuts and connections should be properly made and tightened. Double wall steel tubing should always be used to insure superior fatigue life. Care should be taken when replacing brake tubing, to use the proper bending and flaring tools and to avoid routing the tubes against sharp edges, moving components or in hot areas. All tubes should be properly attached with recommended retaining clips.

Steel tubing is used to conduct hydraulic pressure to the front and rear brakes. Flexible rubber hose is used at both front brakes and at a rear axle junction block. Steel tubing is used from the junction block to both rear wheel cylinders. All fittings, tubing and hoses should be inspected for rusted, damaged or defective flaring seats. The steel tubing is equipped with a double flare or inverted seat to insure more positive seating in the fitting. To repair or reflare tubing proceed as follows:

(1) Using Tool C-3478, cut off damaged seat or damaged tubing (Fig. 3).

(2) Ream out any burred or rough edges showing

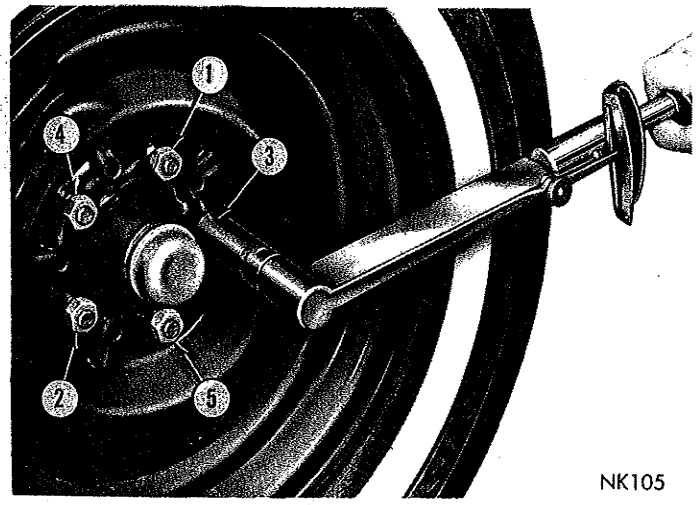


*Fig. 2—Wheel Stud Nut Tightening Sequence*

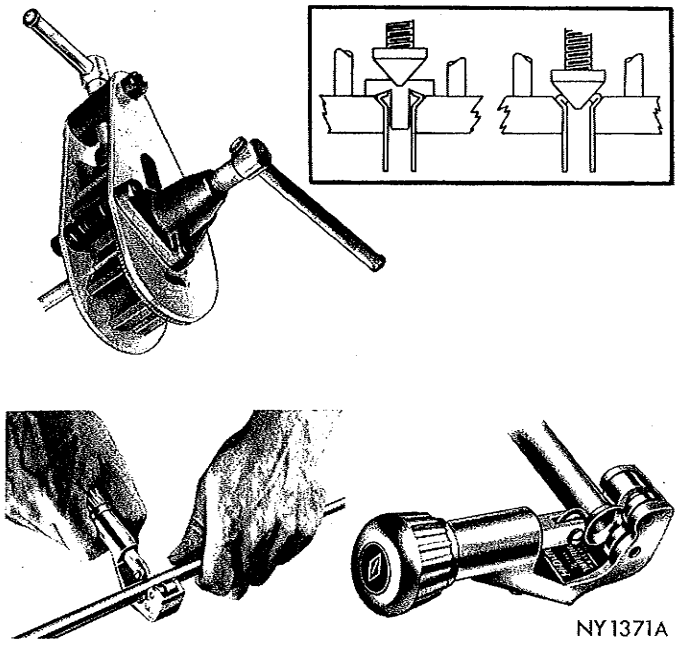


*Fig. 3—Cutting and Flaring Steel Tubing*

MyMopar.com

on inside edges of tubing. This will make the ends of tubing square and insure better seating of flared end of tubing. **Place compression nut on tubing prior to flaring tubing.**

(3) To flare tubing open handles of flaring Tool C-3838 and rotate jaws of tool until the mating jaws of tubing size are centered in area between vertical posts.

(4) Slowly close handles with tubing inserted in jaws but do not apply heavy pressure to handle as this will lock tubing in place.

(5) Place gauge "Form A" on edge over end of tubing and push tubing through jaws until end of tubing contacts the recessed notch of gauge matching the size of tubing (Fig. 3).

(6) Squeeze handles of flaring tool and lock tubing in place.

(7) Place proper sized plug of gauge "A" down in end of tubing. Swing compression disc over gauge and center tapered flaring screw in recess of disc.

(8) Lubricate taper of flaring screw and screw in until plug gauge has seated on jaws of flaring tool. This action has started to invert the extended end of the tubing.

(9) Remove gauge and apply lubricant to tapered end of flaring screw and continue to screw down until tool is firmly seated in tubing.

(10) Remove tubing from flaring tool and inspect seat.

# 9 INCH SERVICE BRAKES

## INDEX


| | Page |
|---|---|
| Brake Drum Installation | |
| Front Brake Drum | 8 |
| Rear Brake Drum | 8 |
| Brake Drum Removal | |
| Front Brake Drum | 5 |
| Rear Brake Drum | 5 |
| Brake Shoe Installation | |
| Front Brake Shoes | 8 |
| Rear Brake Shoes | 8 |
| Brake Shoe Removal | |
| Front Brake Shoes | 5 |
| Rear Brake Shoes | 6 |
| Cleaning and Inspection | 7 |
| Grinding Recommendations | 7 |


## SERVICE PROCEDURES

### BRAKE DRUM REMOVAL

#### *Removing the Front Brake Drums*

To aid in the brake drum removal loosen the brake star adjusting wheel.

(1) With vehicle on a hoist, jack or suitable stands remove rear plug from brake adjusting access hole.

(2) Insert a thin screw driver into brake adjusting hole and push adjusting lever away from star adjusting wheel. **Care should be taken not to bend adjusting lever.**

(3) Insert Tool C-3784 into brake adjusting hole and engage notches of brake adjusting star wheel. Release brake adjustment by prying up with adjusting tool.

(4) Remove wheel cover, grease cap, cotter pin, lock, adjusting nut, outer wheel bearing and remove wheel and drum assembly from spindle, to expose brake linings (Fig. 1).

(5) Inspect brake lining for wear, shoe alignment, or contamination from grease or brake fluid.

#### *Removing the Rear Brake Drums*

(1) With vehicle on a hoist, jack, or suitable stands, remove rear plug from brake adjusting access holes.

(2) Insert a thin screw driver into brake adjusting hole and hold adjusting lever away from notches of adjusting screw.

(3) Insert Tool C-3784 into brake adjusting hole and engage notches of brake adjusting screw. Release brake by prying up with adjusting tool.

(4) Remove rear wheel and clips from wheel studs that hold drums on axle. Remove drum to expose linings (Fig. 2).

(5) Inspect brake lining for wear, shoe alignment or contamination from grease or brake fluid.

### BRAKE SHOE REMOVAL

**Install cylinder piston clamps, Tool C-416 to prevent fluid leakage or air entering the hydraulic system during brake shoe removal.**

#### *Removing the Front Brake Shoes*

With the vehicle elevated on a hoist, jack or suitable stands, remove the front wheels and drums.

(1) Using Tool C-3785 remove secondary return spring (Fig. 3), then remove adjusting cable eye from anchor. (Note how secondary spring overlaps primary spring.) (Fig. 1.)

(2) Remove primary return spring.

(3) Remove brake shoe retainer springs by inserting a small punch into center of spring and while holding backing plate retainer clip, press in, and disconnect spring (Fig. 4). Unhook cable from lever. Remove cable and cable guide.

(4) Disconnect lever spring from lever and disengage from shoe web. Remove spring and lever.

MyMopar.com

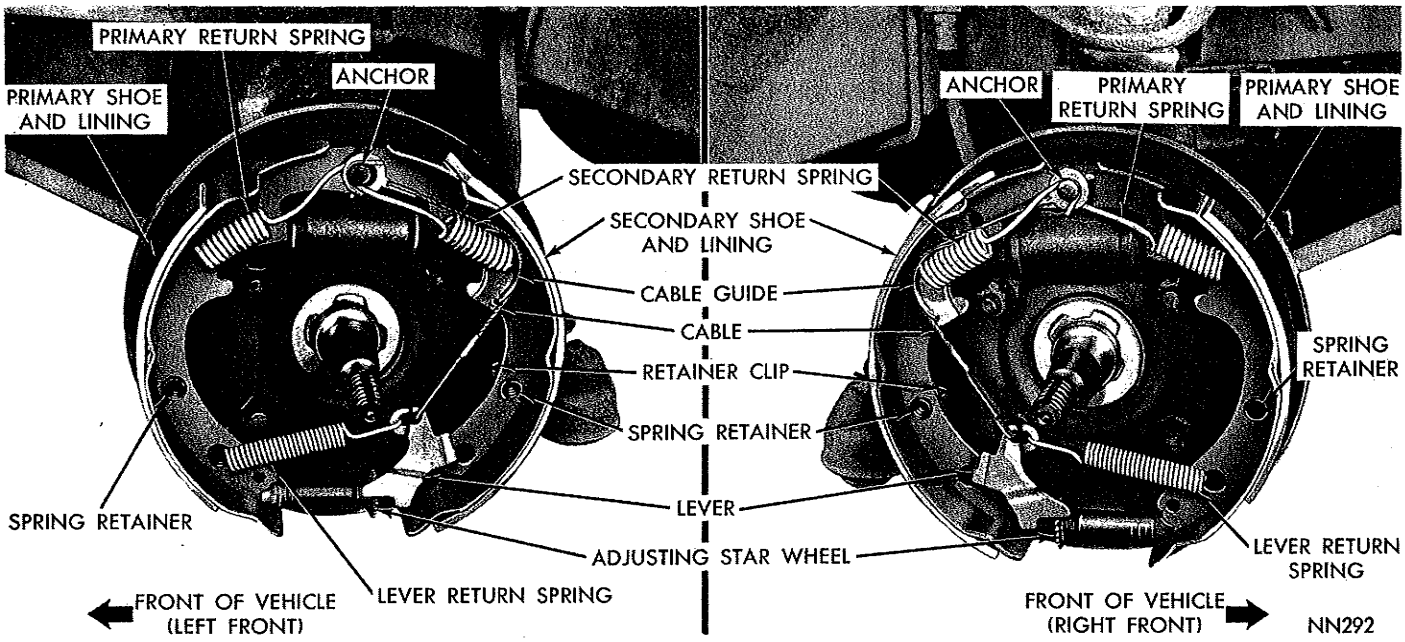


***Fig. 1—Brake Assemblies (Front)***

(5) Remove primary and secondary brake shoe assemblies and adjusting star wheel from support. Install wheel cylinder clamps (Tool C-416) to hold pistons in cylinders.

### *Removing the Rear Brake Shoes*

With the vehicle elevated on a hoist, jack or suitable stand, remove the rear wheel, and the drum retaining clips. Remove the drum.

(1) Using Tool C-3785 remove secondary return spring (Fig. 5), then remove adjusting cable eye from anchor. (Note how secondary spring overlaps primary spring.) (Fig. 2.)

(2) Remove primary return spring.

(3) Remove brake shoe retainer springs, by inserting a small punch into center of spring and while holding backing plate retainer clip, press in and disconnect spring (Fig. 6). Unhook cable from lever. Remove cable and cable guide.

(4) Disconnect lever spring from lever and disengage from shoe web. Remove spring and lever.

(5) Spread anchor ends of primary and secondary shoes and remove parking brake strut and spring (Fig. 7).

(6) Disengage parking brake cable from parking brake lever and remove brake assembly.

(7) Remove primary and secondary brake shoe assemblies and adjusting star wheel from support. Install wheel cylinder clamps Tool C-416 to hold pistons in cylinders.

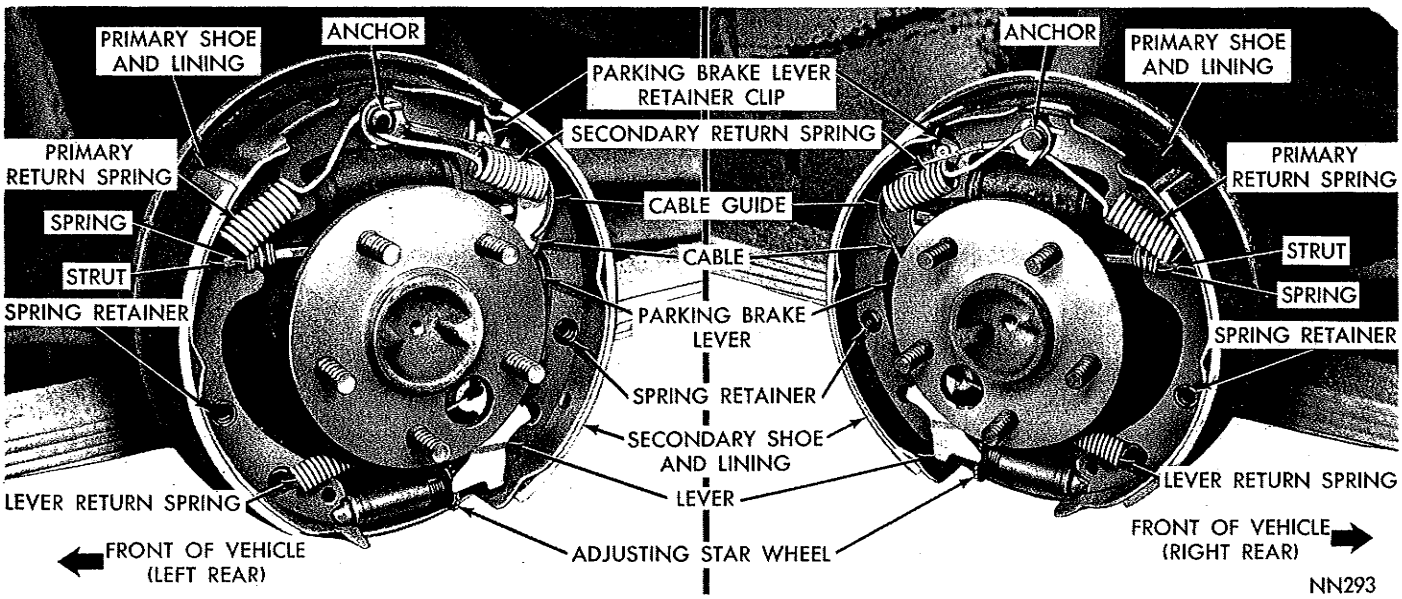


***Fig. 2—Brake Assemblies (Rear)***

MyMopar.com

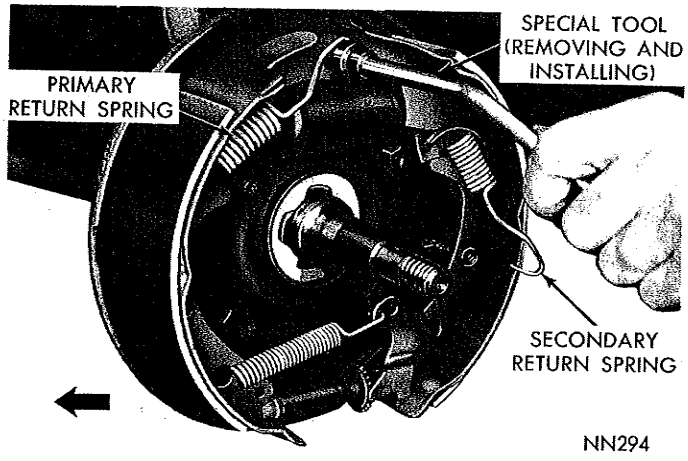


***Fig. 3—Removing or Installing Brake Shoe Return Springs (Left Front)***

## CLEANING AND INSPECTION

Wipe or brush clean (dry) the metal portions of the brake shoes. Examine the lining contact pattern to determine if the shoes are bent. The lining should show contact across the entire width, extending from heel to toe. Shoes showing contact only on one side should be replaced. Shoes having sufficient lining but lack of contact at toe and heel should be measured for proper grind.

Clean the support, using a suitable solvent, then inspect for burrs and remove if necessary. Clean and lubricate threads of the adjusting screws, then inspect for pulled or stripped threads.

## GRINDING RECOMMENDATIONS

**Brake Shoe Lining**—New lining should be measured and ground .060" to .080" (maximum) under the drum diameter.

**Drum Refacing**—Measure the drum runout with an accurate gauge. Drum runout should not exceed .006 inch out of round. If the drum runout is in excess of

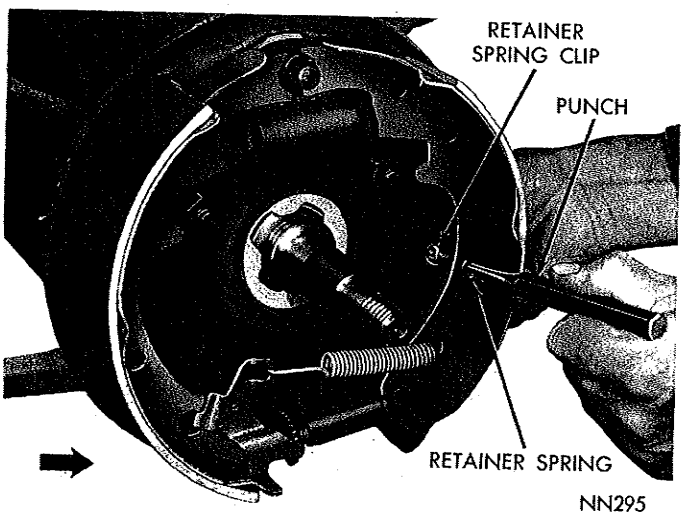


***Fig. 4—Removing or Installing Shoe Retainer Springs (Right Front)***

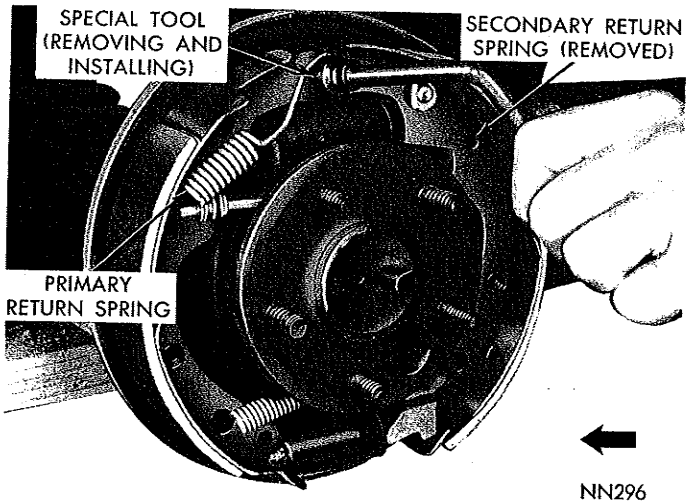


***Fig. 5—Removing or Installing Brake Shoe Return Spring (Left Rear)***

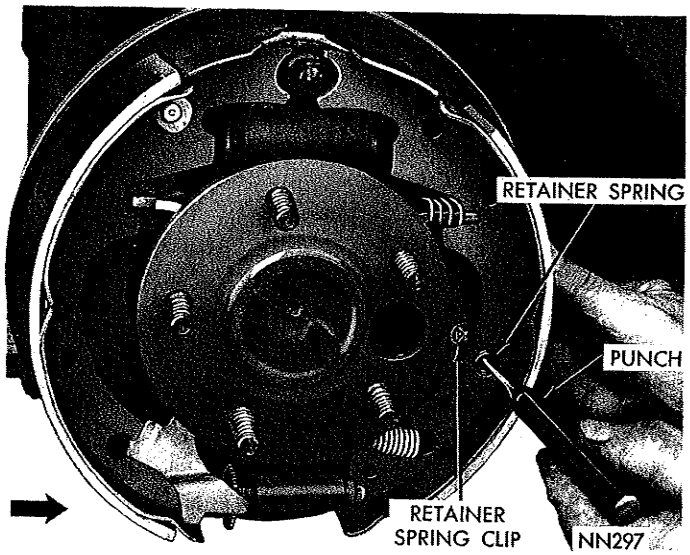


***Fig. 6—Removing or Installing Shoe Retainer Springs (Right Rear)***

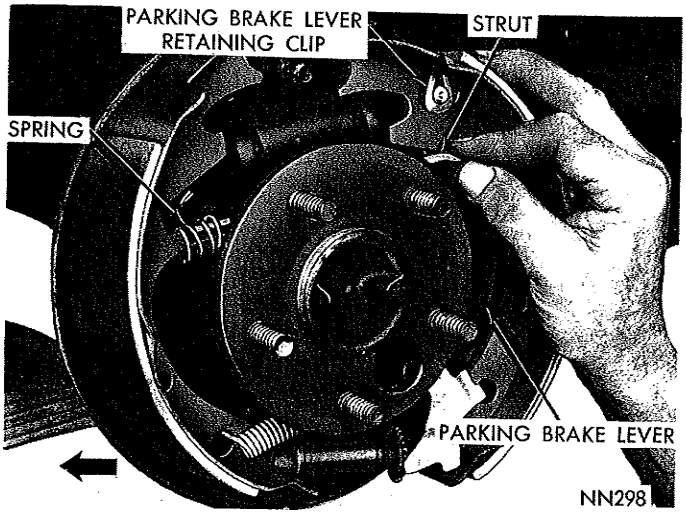


***Fig. 7—Removing or Installing the Parking Brake Strut and Spring (Left Rear)***

MyMopar.com

.006 inch (total indicator run-out) the drum should be refaced. Remove only as much material as is necessary to clean up the drum. **Do not reface more than .060 inch over the standard drum diameter.**

## BRAKE SHOE INSTALLATION

### *Installing Front Brake Shoes*

To install the front brake shoes, refer to (Fig. 1), and proceed as follows:

(1) Match a primary with a secondary brake shoe and place them in their relative position on a work bench.

(2) Lubricate threads of adjusting screw and install it between primary and secondary shoes with star wheel next to secondary shoe, refer to (Fig. 1). (The star adjusting wheels are stamped "R" (right side) and "L" (left side), and indicate their location on vehicle.) Lubricate shoe contact area on support with Lubriplate.

(3) Overlap anchor ends of primary and secondary brake shoes and install adjusting spring and lever.

(4) Spread anchor ends of brake shoes to maintain adjusting lever and spring in position.

(5) Holding brake shoes in their relative position, place brake shoe assembly on support and over anchor pin, (Fig. 8). Remove Tool C-416.

(6) Install brake shoe retaining springs and attach retainer clips by pressing in on spring, using a small punch (refer to Fig. 4.)

(7) Install return spring in primary shoe. Using Tool C-3785, slide spring over anchor.

(8) Install cable guide in secondary shoe and place "eye" of adjusting cable over anchor pin.

(9) Install return spring in secondary shoe and slide over anchor, using Tool C-3785. (Be sure secondary spring overlaps primary, refer to (Fig. 1). Be sure cable guide remains flat against shoe web.

(10) Place adjusting cable over guide and engage hook of cable into adjusting lever.

(11) Lubricate wheel bearings and install brake drum and adjust wheel bearing to proper preload.

(12) Adjust brakes as described under "Service Procedures" at front of this Section.

### *Installing the Rear Brake Shoes*

(1) Inspect platforms of support for nicks or burrs. Apply a thin coat of lubricant to support platforms. (Shoe contact area.)

(2) Attach parking brake lever to back side of secondary shoe, refer to (Fig. 9).

(3) Place secondary and a primary shoe in their relative position on a work bench.

(4) Lubricate threads of adjusting screw and install it between primary and secondary shoes with star wheel next to secondary shoe. (The star adjusting wheels are stamped "R" (right side) and "L" (left side), and indicate their location on vehicle).

(5) Overlap anchor ends of primary and secondary brake shoes and install adjusting spring and lever.

(6) Holding the brake shoes in their relative position and engage parking brake cable into parking brake lever.

(7) Install parking brake strut and spring between parking brake lever and primary shoe, refer to (Fig. 7). Remove Tool C-416.

(8) Place brake shoes on support and install brake shoe retaining springs and attach retainer clips by pressing in on spring, using a small punch (refer to Fig. 4).

(9) Install return spring between primary shoe and anchor pin. Install "eye" of adjusting cable over anchor pin.

(10) Install cable guide in secondary shoe then install secondary return spring. (Be sure secondary spring overlaps primary, refer to (Fig. 2) and return spring does not slip between anchor pin and eye of cable.

(11) Place adjusting cable in groove of cable guide

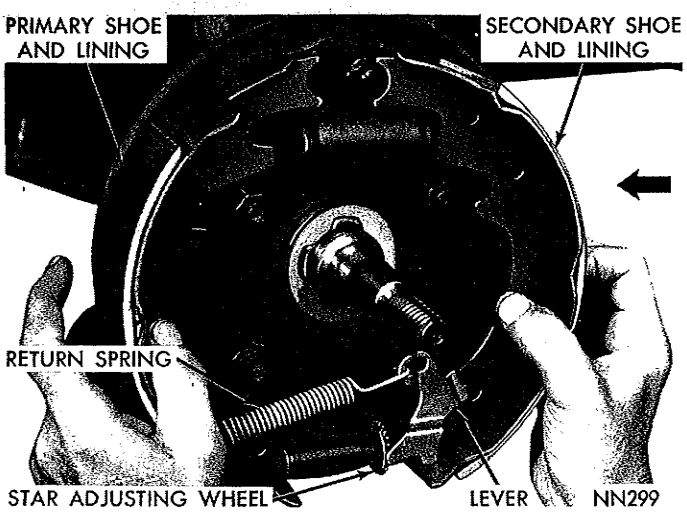


*Fig. 8—Installing the Brake Shoes (Left Front)*

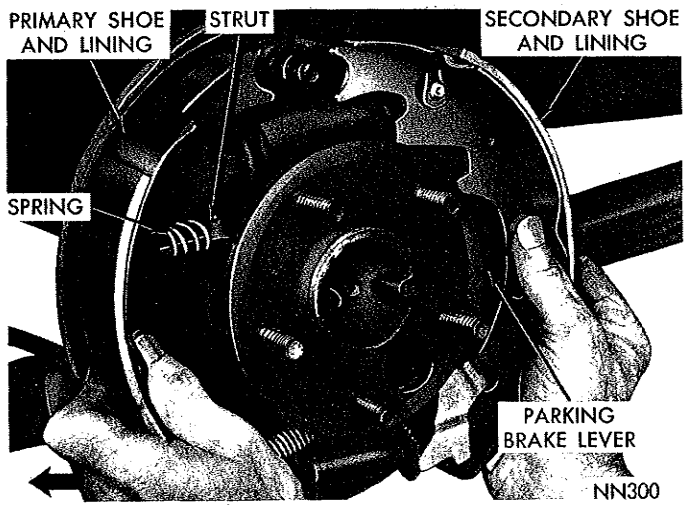


*Fig. 9—Installing the Brake Shoes (Left Rear)*

MyMopar.com

and engage hook of cable into adjusting lever. (Be sure cable guide remains flat against shoe web.)

(12) Install brake drum and retaining clips. Install wheel and tire assembly.

(13) Adjust brakes as described under "Service Procedures" at front of this Section.

# 10-11 INCH BRAKES

## INDEX


| | Page |
|---|---|
| Brake Drum Removal | |
| Front Brake Drums | 9 |
| Rear Brake Drums | 9 |
| Brake Shoe Removal | |
| Front Brake Shoes | 10 |
| Rear Brake Shoes | 10 |
| Cleaning and Inspection | 11 |
| Grinding Recommendations | 11 |
| Brake Shoe Installation | |
| Front Brake Shoes | 11 |
| Rear Brake Shoes | 12 |
| Brake Drum Installation | |
| Front Brake Drums | 12 |
| Rear Brake Drums | 12 |


## SERVICE PROCEDURES

### BRAKE DRUM REMOVAL

#### *Removing the Front Brake Drums*

To aid in brake drum removal loosen brake star adjusting wheel.

(1) With vehicle on a hoist, jack or suitable stands remove rear plug from brake adjusting access hole.

(2) Insert a thin screw driver into brake adjusting hole and push adjusting lever away from star adjusting wheel. **Care should be taken not to bend adjusting lever.**

(3) Insert Tool C-3784 into brake adjusting hole and engage notches of brake adjusting star wheel. Release brake adjustment by prying up with adjusting tool.

(4) Remove wheel cover, grease cap, cotter pin, lock, adjusting nut, outer wheel bearing and remove wheel and drum assembly from spindle to expose brake linings. (Fig. 1.)

(5) Inspect brake lining for wear, shoe alignment, or contamination from grease or brake fluid.

#### *Removing the Rear Brake Drums*

(1) With vehicle on a hoist, jack, or suitable stands, remove rear plug from brake adjusting access hole.

(2) Insert a thin screw driver into brake adjusting hole and hold adjusting lever away from notches of adjusting screw.

(3) Insert Tool C-3784 into brake adjusting hole and engage notches of brake adjusting screw. Release brake by prying up with adjusting tool.

(4) Remove rear wheel and clips from wheel studs that holds drum on axle. Remove drum.

(5) Inspect brake lining for wear, shoe alignment or contamination from grease or brake fluid.

### BRAKE SHOE REMOVAL

**Install cylinder piston clamps, Tool C-416 to pre-**

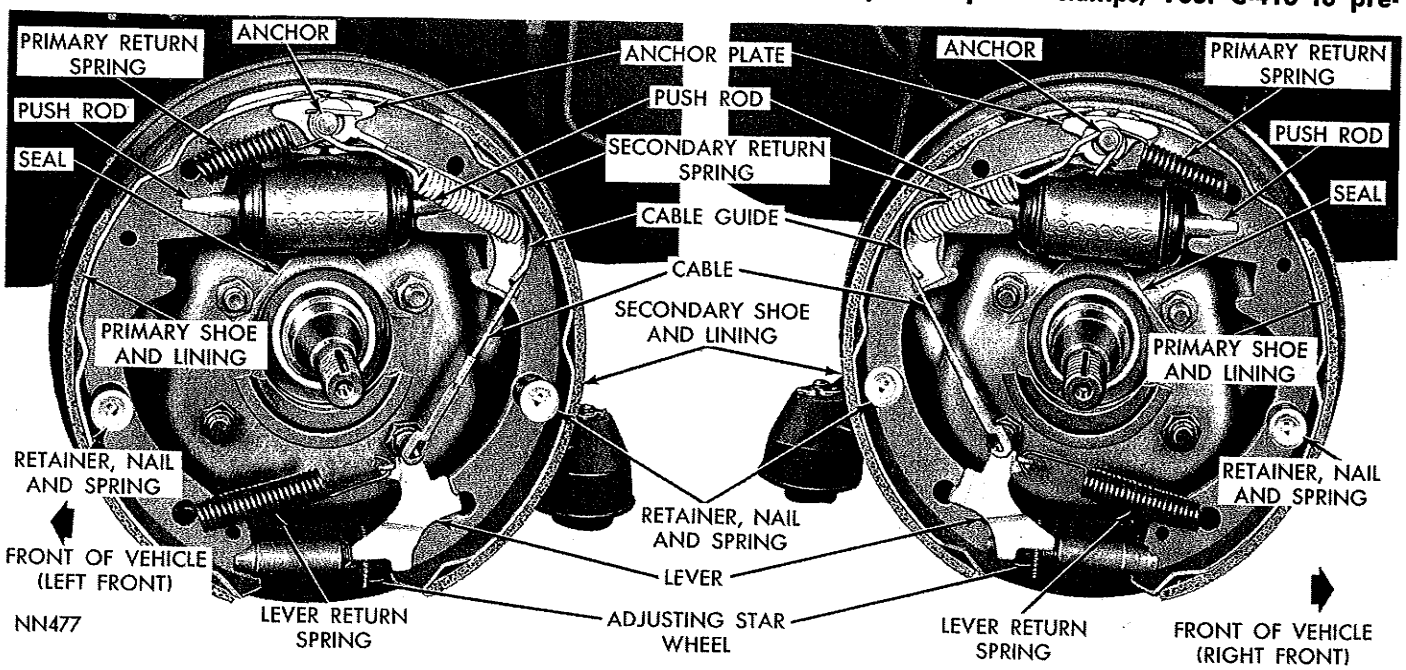


*Fig. 1—Brake Assemblies (Front)*

MyMopar.com

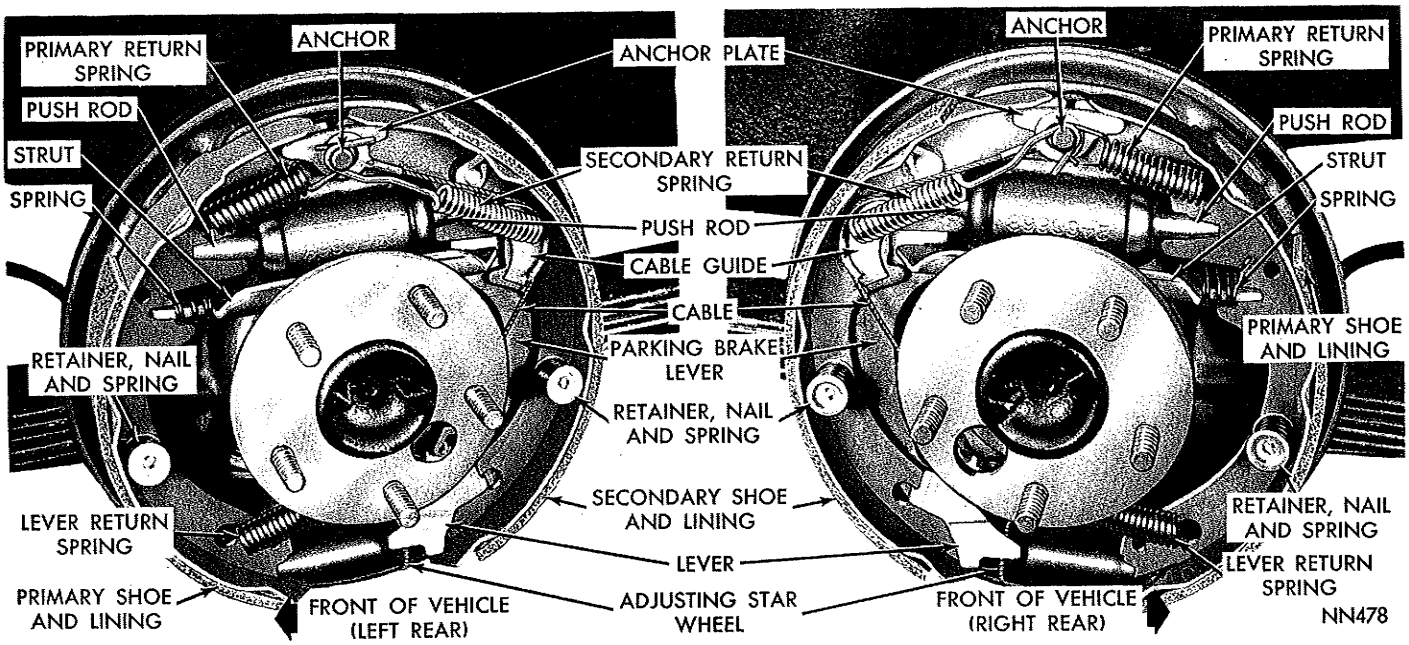


*Fig. 2—Brake Assemblies (Rear)*

**vent fluid leakage or air entering hydraulic system during brake shoe removal.**

### *Removing the Front Brake Shoes*

With the vehicle elevated on a hoist, jack or suitable stands, remove the front wheels and drums.

(1) Using Tool C-3785 remove brake shoe return springs (Fig. 3). (Note how secondary spring overlaps primary spring). (Fig. 1).

(2) Remove brake shoe retainer, spring and nails (Fig. 4).

(3) Slide eye of automatic adjuster cable off anchor and unhook from lever. Remove cable, cable guide and anchor plate.

(4) Disconnect lever spring from lever and disengage from shoe web. Remove spring and lever.

(5) Remove primary and secondary brake shoe assemblies and adjusting star wheel from support. Install wheel cylinder clamps (Tool C-416) to hold pistons in cylinders.

### *Removing the Rear Brake Shoes*

(1) With vehicle elevated on a hoist, jack or suitable stand, remove rear wheel, and drum retaining clips. Remove drum.

(2) Using Tool C-3785 remove brake shoe return springs (Fig. 5). (Note how secondary spring overlaps primary spring.) (Fig. 2.)

(3) Remove brake shoe retainers, springs and nails, refer to (Fig. 6).

(4) Slide eye of automatic adjuster cable off anchor and then unhook from lever. Remove cable, cable guide and anchor plate.

(5) Disconnect lever spring from lever and disengage from shoe web. Remove spring and lever.

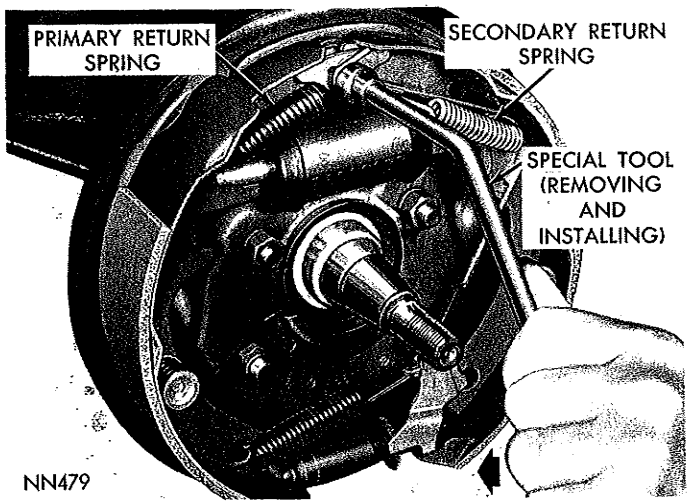


*Fig. 3—Removing or Installing Brake Shoe Return Springs (Left Front)*

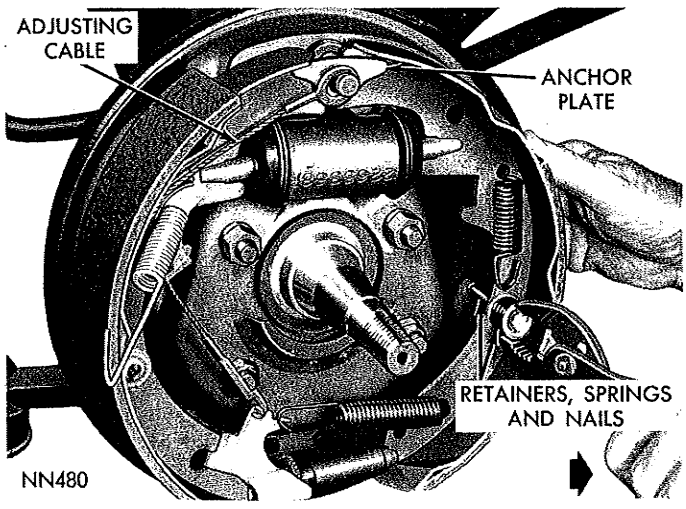


*Fig. 4—Removing or Installing Brake Shoe Retainer, Springs and Nails (Right Front)*

MyMopar.com

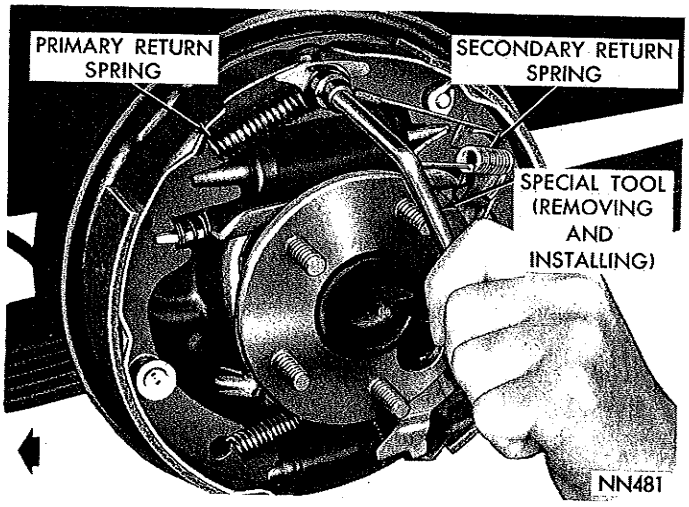


*Fig. 5—Removing or Installing Brake Shoe Return Springs (Left Rear)*

(6) Spread anchor ends of primary and secondary shoes and remove parking brake strut and spring (Fig. 7).

(7) Disengage parking brake cable from parking brake lever and remove brake assembly.

(8) Remove primary and secondary brake shoe assemblies and adjusting star wheel from support. Install wheel cylinder (Tool C-416) to hold pistons in cylinders.

## CLEANING AND INSPECTION

Wipe or brush clean (dry) the metal portions of the brake shoes. Examine the lining contact pattern to determine if the shoes are bent. The lining should show contact across the entire width, extending from heel to toe. Shoes showing contact only on one side should be replaced. Shoes having sufficient lining but lack of contact at toe and heel should be measured for proper grind.

Clean the support, using a suitable solvent, then inspect for burrs. Remove if necessary. Clean and lubricate threads of the adjusting screws, then inspect for pulled or stripped threads.

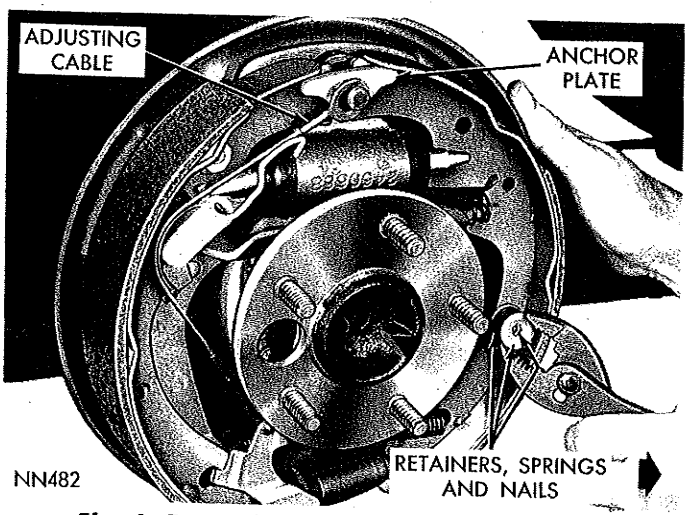


*Fig. 6—Removing or Installing Brake Shoe Retainers, Springs and Nails (Right Rear)*

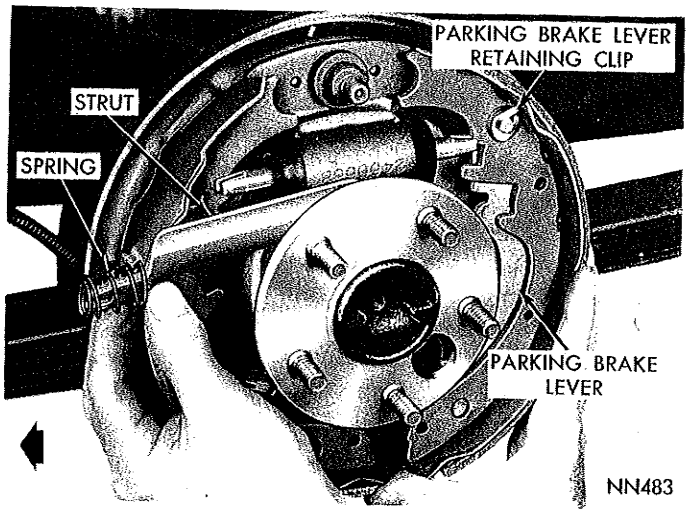


*Fig. 7—Removing or Installing the Parking Brake Strut and Spring (Left Rear)*

## GRINDING RECOMMENDATIONS

**Brake Shoe Lining**—New lining should be measured and ground .060″ to .080″ (maximum) under the drum diameter.

**Drum Refacing**—Measure the drum runout with an accurate gauge. Drum runout should not exceed .006 inch out of round. If the drum runout is in excess of .006 inch, (total indicator run-out) the drum should be refaced. Remove only as much material as is necessary to clean up the drum. **Do not reface more than .060 inch over the standard drum diameter.**

## BRAKE SHOE INSTALLATION

### *Installing the Front Brake Shoes*

To install the front brake shoes, refer to (Fig. 1), and proceed as follows:

(1) Match a primary with a secondary brake shoe and place them in their relative position on a work bench.

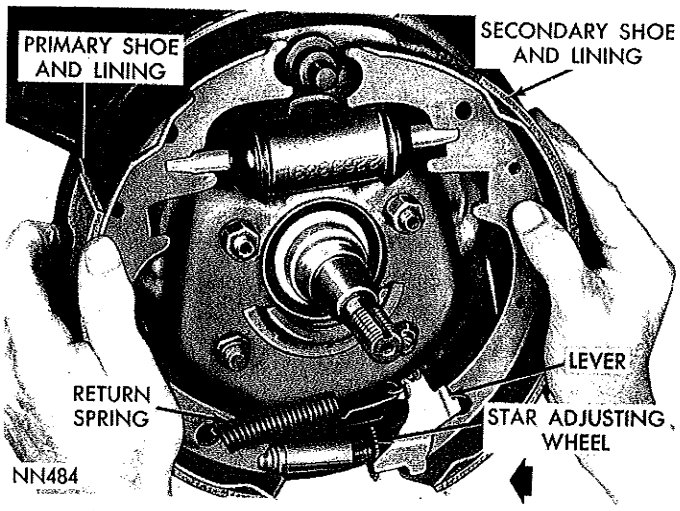


*Fig. 8—Installing Brake Shoes (Left Front)*

MyMopar.com

(2) Lubricate threads of adjusting screw and install it between primary and secondary shoes with star wheel next to secondary shoe. Refer to (Fig. 1). The star adjusting wheels are stamped "R" (right side) and "L" (left side), and indicate their location on the vehicle. Lubricate shoe contact area on support with Lubriplate.

(3) Overlap anchor ends of primary and secondary brake shoes and install adjusting spring and lever.

(4) Spread anchor ends of brake shoes to maintain adjusting lever and spring in position.

(5) Holding brake shoes in their relative position, place brake shoe assembly on support and over anchor pin (Fig. 8). Remove Tool C-416.

(6) Install nails, cups, springs and retainers.

(7) Install anchor pin plate.

(8) Install cable guide in secondary shoe and place "eye" of adjusting cable over anchor pin.

(9) Install return spring in primary shoe. Using Tool C-3785, slide spring over anchor. (Be sure cable guide remains flat against shoe web.)

(10) Install return spring in secondary shoe and slide over anchor, using Tool C-3785. (Be sure secondary spring overlaps primary, refer to (Fig. 1).

(11) Place adjusting cable over guide and engage hook of the cable into adjusting lever.

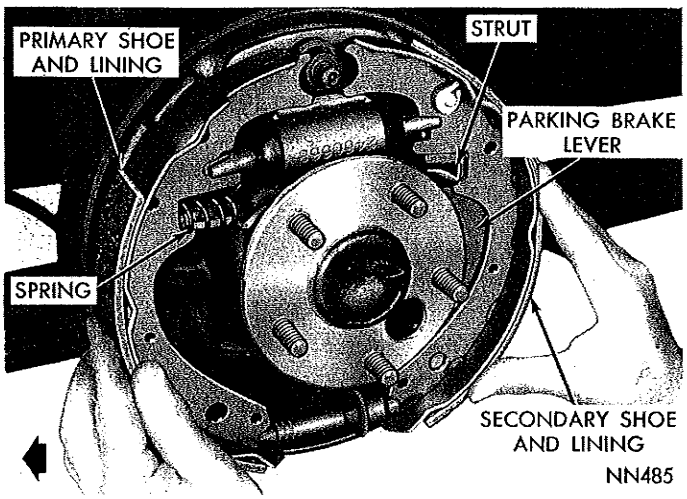


*Fig. 9—Installing Brake Shoes (Left Rear)*

(12) Lubricate wheel bearings and install brake drum and adjust wheel bearing to proper preload.

(13) Adjust brakes as described under "Service Procedures" at front of this Section.

### *Installing the Rear Brake Shoes*

(1) Inspect platforms of support for nicks or burrs. Apply a thin coat of lubricant to support platforms (Shoe contact area).

(2) Attach parking brake lever to back side of secondary shoe, refer to (Fig. 9).

(3) Place secondary and a primary shoe in their relative position on a work bench.

(4) Lubricate threads of adjusting screw and install it between primary and secondary shoes with star wheel next to secondary shoe. The star adjusting wheels are stamped "R" (right side) and "L" (left side), and indicate their location on the vehicle.

(5) Overlap anchor ends of primary and secondary brake shoes and install adjusting spring and lever.

(6) Holding brake shoes in their relative position and engage parking brake cable into parking brake lever.

(7) Install parking brake strut and spring between parking brake lever and primary shoe, refer to (Fig. 7). Remove Tool C-416.

(8) Place brake shoes on support and install retainer nails, springs and retainers (Fig. 9).

(9) Install anchor pin plate.

(10) Install "eye" of adjusting cable over anchor pin and install return spring between primary shoe and anchor pin.

(11) Install cable guide in secondary shoe then install secondary return spring. (Be sure secondary spring overlaps primary, refer to (Fig. 2) and return spring does not slip between anchor pin and eye of cable.)

(12) Place adjusting cable in groove of cable guide and engage hook of the cable into adjusting lever. (Be sure cable guide remains flat against shoe web.)

(13) Install brake drum and retaining clips. Install wheel and tire assembly.

(14) Adjust brakes as described under "Service Procedures" at front of this Section.

## MASTER CYLINDER

### INDEX


| | Page |
|---|---|
| Assembling the Master Cylinder | 13 |
| Dissasembling the Master Cylinder | 12 |
| Installing the Master Cylinder | 13 |
| Removing the Master Cylinder | 12 |


### REMOVING THE MASTER CYLINDER

Should it become necessary to remove the master cylinder for repair or overhaul, proceed as follows:

(1) Disconnect push rod from pedal.

(2) Disconnect brake tube at master cylinder outlet.

(3) Remove nuts and bolts that attach master cylinder to dash panel. Slide master cylinder straight out and away from dash panel.

(4) Remove push rod return spring.

### DISASSEMBLING THE MASTER CYLINDER

To disassemble the master cylinder, refer to (Fig.

MyMopar.com

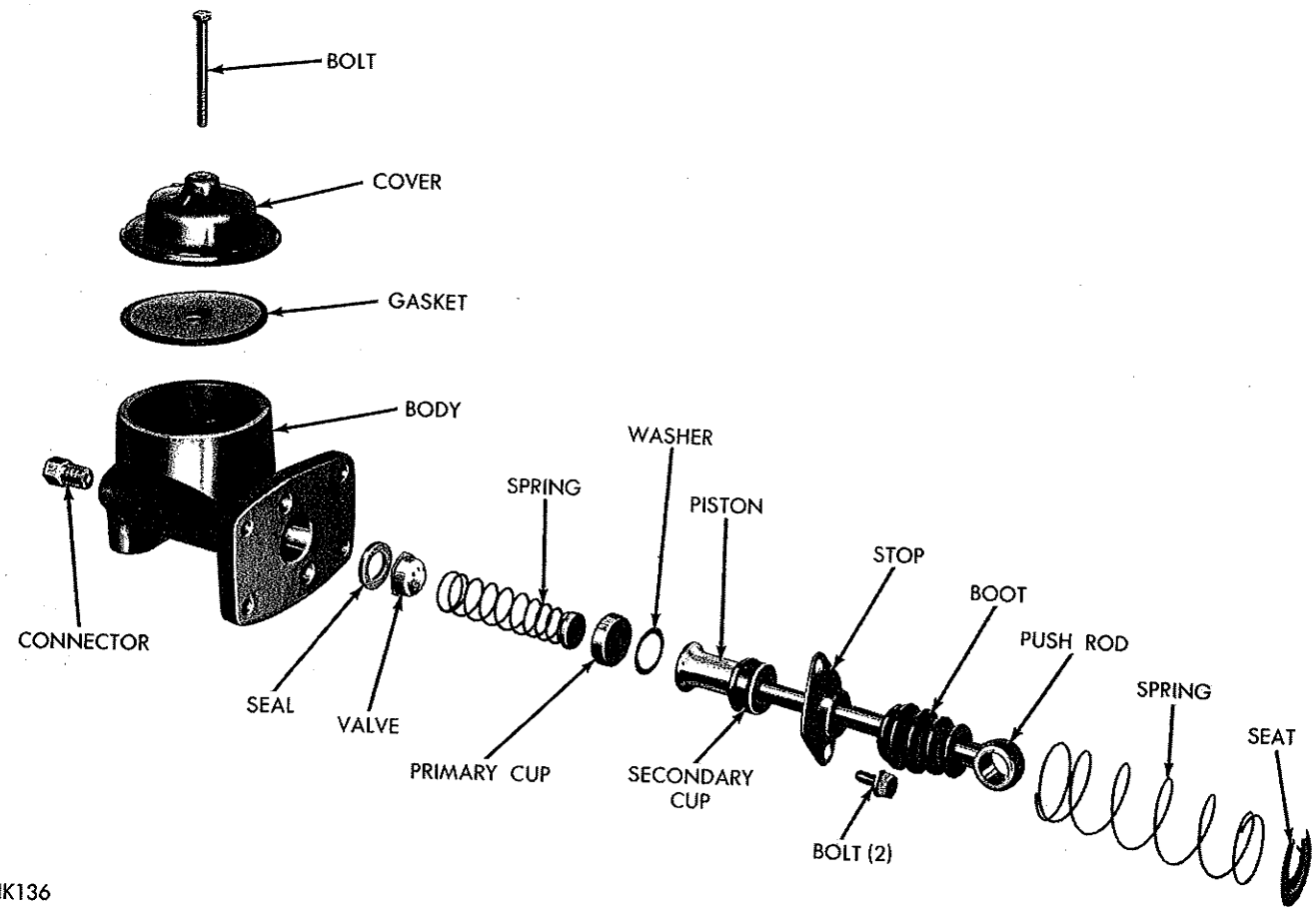


*Fig. 1—Master Cylinder Assembly*

1), then proceed as follows:

Clean outside of master cylinder thoroughly, then drain all brake fluid.

(1) Remove piston stop flange attaching bolts and remove dust boot, push rod and piston assembly. (Do not remove push rod from piston.)

(2) Remove brass washer between piston and cup. Remove master cylinder primary cup, spring valve and seal from master cylinder.

(3) Wash master cylinder bore with clean brake fluid and inspect for scoring or pitting.

If master cylinder piston is badly scored or corroded, replace it with a new one. The primary and secondary cups and valve assembly should be replaced when reconditioning master cylinder.

Master cylinder walls that have light scratches or show signs of corrosion, can usually be cleaned with crocus cloth. However, cylinders that have deep scratches or scoring may be honed, providing the diameter of the cylinder bore is not increased more than .002 inch. A master cylinder bore that does not clean up at .002 inch should be discarded and a new cylinder installed. (Black stains on the cylinder wall are caused by the piston cups and will do no harm.) **Use extreme care in cleaning the master cylinder after reconditioning. Remove all dust or grit by flushing the cylinder with alcohol; wipe dry with a clean lintless cloth and clean a second time with alcohol. Dry the master cylinder with compressed air then flush with clean brake fluid. (Be sure the .028 inch diameter hole compensator port in the master cylinder bore is open.)**

## ASSEMBLING THE MASTER CYLINDER

Before assembling, the piston, cups and valve assembly should be dipped in clean brake fluid. To reassemble the master cylinder, refer to (Fig. 1), then proceed as follows:

(1) Install seal check valve and spring in cylinder with valve toward outlet of cylinder.

(2) Install master cylinder cup in cylinder with open end of cup over closed end of return spring.

(3) Install secondary cup on master cylinder piston, install piston and push rod assembly in cylinder with flat brass washer between piston and primary cup.

(4) Install dust boot on push rod and install stop flange bolts.

## INSTALLING THE MASTER CYLINDER

(1) Reinstall master cylinder on dash panel and fill with brake fluid. Tighten nuts to 100 inch pounds.

(2) Attach brake line and pedal to push rod.

(3) Bleed brake system.

MyMopar.com

# WHEEL CYLINDERS

## INDEX


| | Page |
|---|---|
| Assembling Wheel Cylinders | 14 |
| Disassembling Wheel Cylinders | 14 |
| Installing Brake Supports | 16 |
| Installing Wheel Cylinders | 15 |
| Removing Brake Supports | 15 |
| Removing Wheel Cylinders | 14 |


## REMOVING THE WHEEL CYLINDERS

***Front or Rear***

With all the brake drums removed inspect the wheel cylinder boots for evidence of a brake fluid leak. (A slight amount of fluid on the boot may not be a leak, but may be preservative oil used on the assembly.)

(1) In case of a leak, remove brake shoes (replace if soaked with grease or brake fluid), boots, pistons, wheel cylinder cups and wheel cylinder cup expansion spring.

(2) Wash wheel cylinder bore with clean brake fluid and inspect for scoring or pitting.

Use extreme care in cleaning wheel cylinder after reconditioning. Remove all dust or grit by flushing cylinder with alcohol; Wipe dry with a clean lintless cloth and clean a second time with alcohol. Dry wheel cylinder with air pressure, then flush with clean brake fluid. (Be sure bleeder screw port and bleeder screw are clean and open.)

Wheel cylinder bores or pistons that are badly scored or corroded should be replaced. The old piston cups should be discarded when reconditioning the wheel cylinders.

Cylinder walls that have light scratches, or show signs of corrosion, can usually be cleaned with crocus cloth, using a circular motion. However, cylinders that have deep scratches or scoring may be honed, using Tool C-3080, providing the diameter of the cylinder bore is not increased more than .002 inch. **A cylinder that does not clean up at .002 inch should be discarded and a new cylinder installed. (Black stains on the cylinder walls are caused by the piston cups and will do no harm.)**

Should inspection reveal the necessity of installing a new wheel cylinder (front or rear), proceed as follows:

(1) Disconnect brake hose from brake tube at frame bracket (front wheels) or, disconnect brake tube from wheel cylinder (rear wheels).

(2) Disconnect brake hose from wheel cylinder (front wheels only) and remove wheel cylinder attaching bolts, then slide wheel cylinder out of support.

## DISASSEMBLING THE WHEEL CYLINDERS

***(Front or Rear)***

If the wheel cylinders were not disassembled before removal, refer to (Figs. 1 or 2), then proceed as follows:

(1) Remove boots and push rods.

(2) Press in on one end of cylinder and force out piston, cup, piston spring, cup and piston.

## ASSEMBLING THE WHEEL CYLINDERS

***(Front or Rear)***

To assemble the wheel cylinder, refer to (Figs. 1 or 2), then proceed as follows:

Before assembling the pistons and new cups in the wheel cylinder, dip them in brake fluid. If the boots are deteriorated, cracked or do not fit tightly on the brake shoe push rod, as well as the wheel cylinder casting, new boots should be installed.

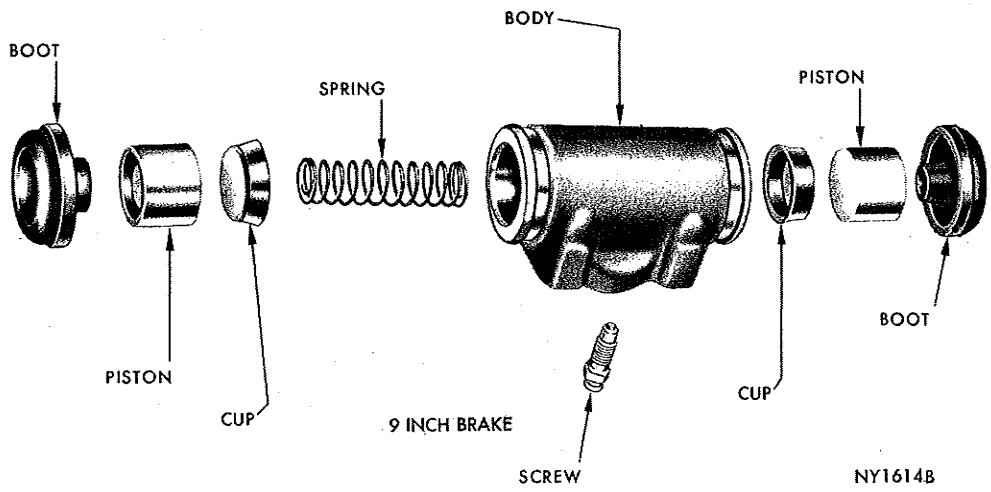


*Fig. 1—Wheel Cylinder (9" Brake)*

MyMopar.com

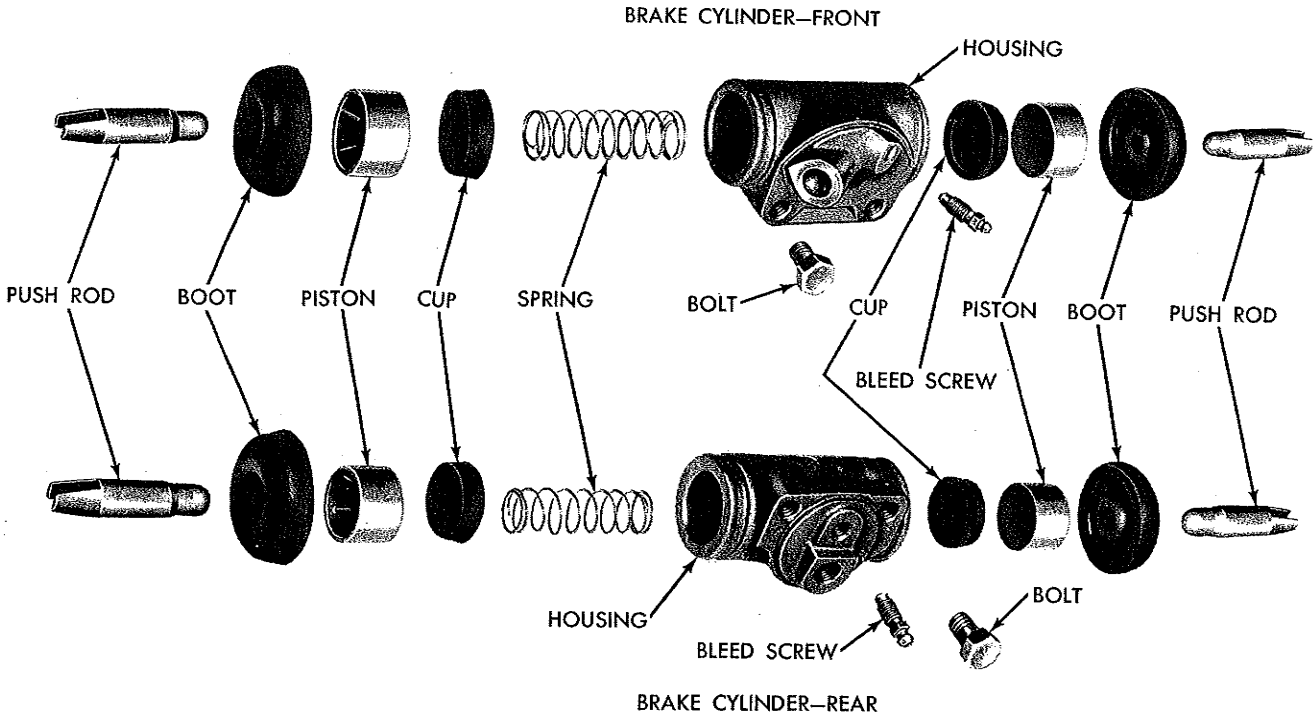


***Fig. 2—Wheel Cylinder (Front and Rear) (10-11" Brake)***

(1) Wash wheel cylinder with alcohol and blow dry with air.

(2) Install expansion spring in cylinder. Install wheel cylinder cups in each end of cylinder with open end of cups facing each other.

(3) Install wheel cylinder pistons in each end of cylinder with recessed end of pistons facing open ends of cylinder.

(4) Install boots over ends of cylinder. Keep assembly compressed with aid of a brake cylinder clamp until brake shoes are assembled.

## INSTALLING THE WHEEL CYLINDERS

***(Front or Rear)***

(1) Slide wheel cylinder into position in support. Install attaching bolts and tighten securely. (10-11" 17 to 20 foot pounds.) (9" 7 to 10 foot pounds.)

(2) Apply sealing putty around wheel cylinder to prevent any water or dirt from entering the brake assembly.

(3) Connect brake tube to wheel cylinder and tighten to 95 inch pounds (rear wheels) or connect brake hose to wheel cylinder (front wheels), and tighten to 25 foot pounds, before connecting brake hose to frame bracket. **Should hose be connected to wheel cylinder last, tightening of the hose into wheel cylinder will twist hose, which can result in suspension or tire interference.**

## REMOVING THE BRAKE SUPPORT

***(Front)***

(1) Disconnect brake line from brake hose at frame bracket.

(2) With wheel and brake drum removed, remove four support attaching nuts and washers.

(3) Remove support and brake assembly from spindle.

***(Rear)***

(1) With wheel and brake drum removed, remove support attaching nuts and washers.

(2) Remove rear axle shaft and retainer.

(3) Disconnect hydraulic brake line from wheel cylinder.

(4) Disengage brake cable from parking brake lever.

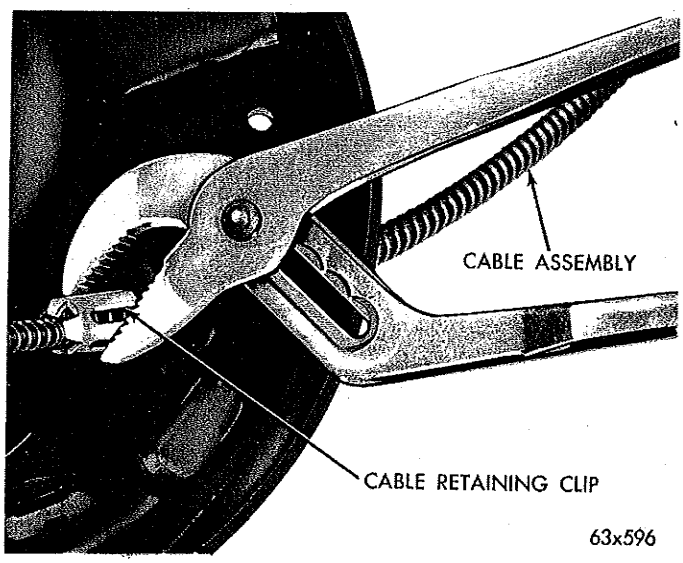


***Fig. 3—Removing Brake Cable from Support***

MyMopar.com

(5) Using a suitable tool compress three flared legs of cable retainer and pull brake cable out of support (Fig. 3).

(6) Remove brake support from rear axle housing.

## INSTALLING THE BRAKE SUPPORT

***(Front)***

(1) Install brake shoes on support.

(2) Place support on spindle support and install attaching bolts, nuts and washers. Tighten attaching nuts to 55 foot-pounds.

(3) Connect brake hose to wheel cylinder and tighten to 25 foot pounds, before connecting brake hose to frame bracket. **Should hose be connected to wheel cylinder last, tightening of hose into wheel cylinder will twist hose, which can result in suspension of tire interference problems.**

(4) Install brake drum and wheel bearings. Adjust bearings. Bleed and adjust brakes.

***(Rear)***

(1) Install brake shoes on support.

(2) Install support onto rear axle housing.

(3) Insert rear axle shaft and retainer into housing and install axle retainer nuts and washers. Tighten retainer nuts to 35 foot-pounds.

(4) Attach brake line to wheel cylinder and tighten to 95 inch-pounds.

(5) Insert parking brake cable into support plate and attach cable to parking brake lever.

(6) Install brake drum and wheel. Bleed and adjust brakes.

# PARKING BRAKES

## INDEX


| | Page | | Page |
|---|---|---|---|
| Adjusting the Parking Brake | 16 | Removing Front Parking Brake Cable | 17 |
| General Information | 16 | Removing Rear Parking Brake Cable | 17 |
| Installing the Front Parking Brake Cable | 17 | Service Diagnosis | 16 |
| Installing the Rear Parking Brake Cable | 17 | | |


## GENERAL INFORMATION

The rear wheel service brakes also act as parking brakes. The brake shoes are mechanically operated by a lever and strut connected to a flexible steel cable. The wheel brake cables are joined together by a forward brake cable and equalizer extending to the parking brake pedal or release handle, (Figs. 1, 2, 3 and 4).

## SERVICE DIAGNOSIS

| Condition | Possible Cause | Correction |
|---|---|---|
| **DRAGGING BRAKE** | (a) Improper cable or brake shoe adjustment. | (a) Properly adjust the service brakes then adjust the parking brake cable. |
| | (b) Broken brake shoe return spring. | (b) Replace any broken return spring. |
| | (c) Broken brake shoe retainer spring. | (c) Replace the broken retainer spring. |
| | (d) Grease or brake fluid soaked lining. | (d) Replace the grease seal or recondition the wheel cylinders and replace both brake shoes. |
| | (e) Sticking or frozen brake cable. | (e) Replace cable. |
| | (f) Broken rear spring. | (f) Replace the broken rear spring. |
| | (g) Bent or rusted cable equalizer. | (g) Straighten, or replace and lubricate the equalizer. |
| **BRAKE WILL NOT HOLD** | (a) Broken or rusted brake cable. | (a) Replace cable. |
| | (b) Improperly adjusted brake or cable. | (b) Adjust brakes and cable as necessary. |
| | (c) Soaked brake lining. | (c) Replace the brake lining. |
| | (d) Ratchet or pedal mechanism worn. | (d) Replace pedal assembly. |

## SERVICE PROCEDURES

### ADJUSTING THE PARKING BRAKES

**The service brakes must be properly adjusted before adjusting the parking brake.**

(1) Release parking brake lever and loosen cable adjusting nut to insure cable is slack, refer to (Figs. 1 or 2). Before loosening cable adjusting nut, clean threads with wire brush and lubricate with grease.

(2) Tighten cable adjusting nut until a slight drag is felt while rotating wheel, loosen cable adjusting nut until both rear wheels can be rotated freely, then back off cable adjusting nut two full turns.

(3) Apply parking brake several times, then release and test to see that rear wheels rotate freely without dragging.

MyMopar.com

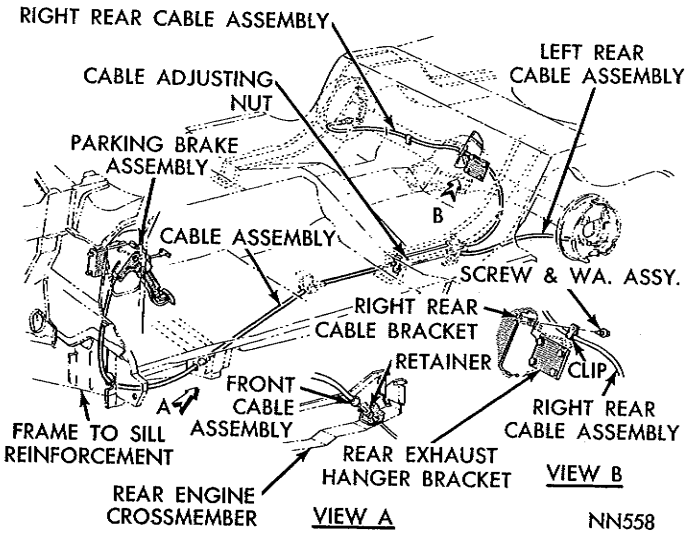


***Fig. 1—Parking Brake Cable Routing (Plymouth)***

## REMOVING THE REAR PARKING BRAKE CABLE

The independent rear brake cables are attached to an equalizer (Fig. 1). The front cable is adjusted at the equalizer.

Should it become necessary to remove the parking brake cable (rear) for installation of a new cable, refer to (Fig. 3) Service Brakes.

(1) With vehicle jacked up or on a suitable hoist, remove rear wheels.

(2) Disconnect brake cable from equalizer.

(3) Remove retaining clip from brake cable bracket.

(4) Remove brake drum from rear axle.

(5) Remove brake shoe return springs.

(6) Remove brake shoe retaining springs.

(7) Remove brake shoe strut and spring from brake back plate and disconnect brake cable from operating arm.

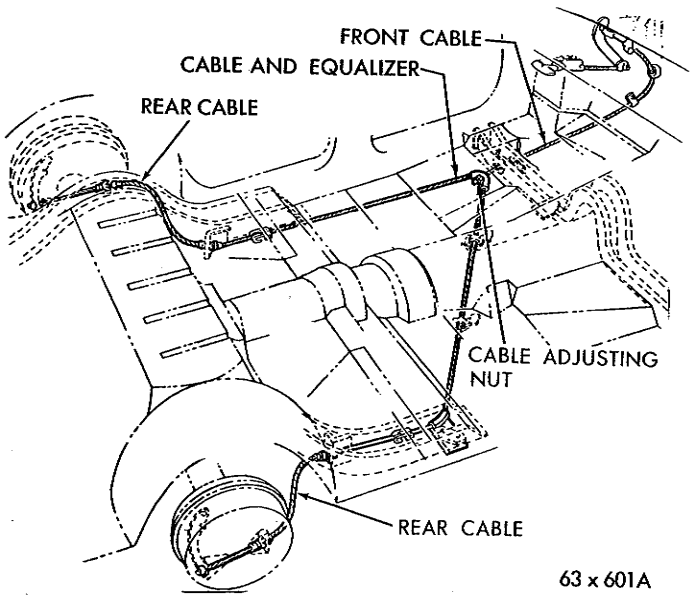


***Fig. 2—Parking Brake Cable Routing (Valiant)***

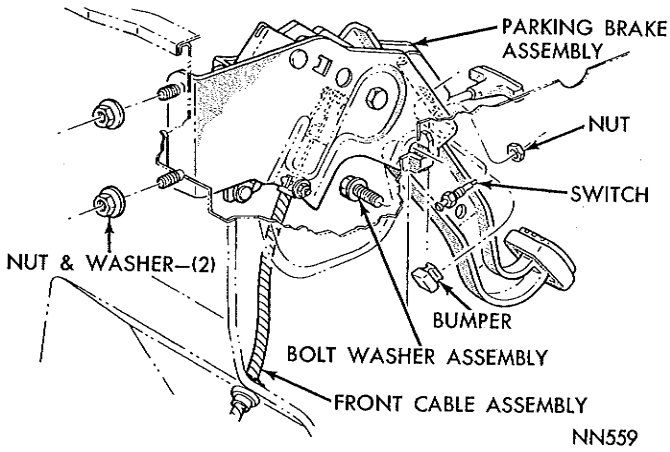


***Fig. 3—Parking Brake Pedal (Plymouth)***

(8) Compress retainers on end of brake cable housing and remove cable from brake plate. Refer to (Fig. 3) Service Brakes.

## INSTALLING THE REAR PARKING BRAKE CABLE

**When installing a new brake cable, lubricate the cable with short fibre grease at the contact points.**

(1) Insert brake cable and housing into brake support plate making certain that housing retainers lock the housing firmly into place.

(2) Holding brake shoes in place on support plate, engage brake cable into brake shoe operating lever. Install parking brake strut and spring.

(3) Install brake shoe retaining springs, and brake shoe return springs.

(4) Install brake drum and the wheel.

(5) Insert brake cable and housing into cable bracket and install retaining clip.

(6) Insert brake cable into equalizer. Note different size slot for corresponding cable end fitting.

(7) Adjust the service brakes and parking brake cable.

## REMOVING THE FRONT PARKING BRAKE CABLE

(1) Disengage the front parking brake cable from equalizer bar. Refer to (Figs. 1 or 2).

(2) Disengage cable from guide clip.

(3) Using a screw driver force cable housing and attaching clip out of body crossmember.

(4) Fold back left front edge of floor mat and remove rubber cable cover from floor pan.

(5) **Depress** parking brake pedal and work brake cable up and out of brake pedal linkage (Figs. 3 or 4).

(6) Using a screw driver force upper end of cable housing and clip down out of pedal assembly bracket.

(7) Remove cable to floor pan clip and work cable and housing assembly up through floor pan.

## INSTALLING THE FRONT PARKING BRAKE CABLE

(1) Insert rear end of brake cable and housing

MyMopar.com

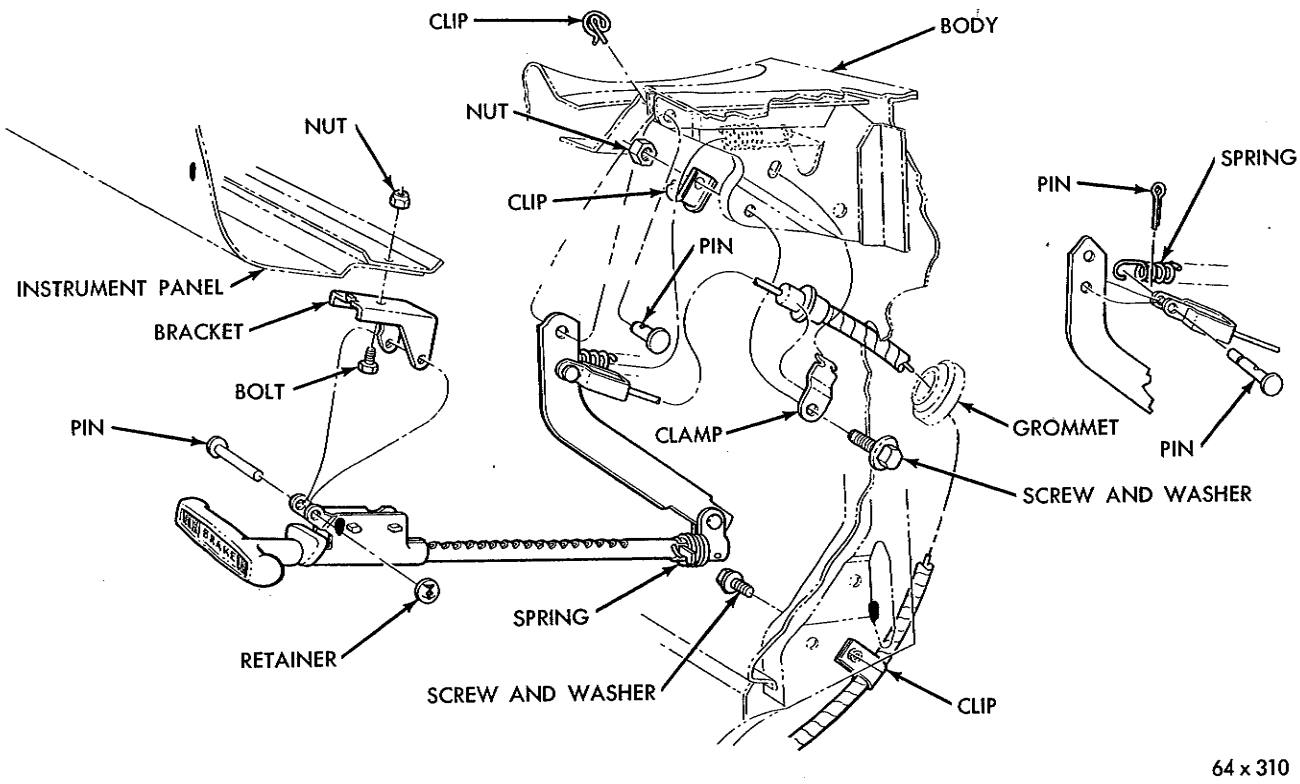


***Fig. 4—Parking Brake Lever (Valiant)***

down through cable routing hole in floor pan.

(2) Engage upper end of cable and housing assembly up through pedal assembly bracket and firmly attach housing and clip into bracket.

(3) Depress parking brake pedal and insert end of cable into parking brake pedal clevis.

(4) Insert cable through body crossmember and firmly press into place housing and attaching clip.

(5) Attach front cable to equalizer bar.

(6) Adjust service brakes and parking brake cable.

(7) Apply brakes several times and test for free wheel rotation when parking brake is in "off" position.

## MIDLAND ROSS POWER BRAKE

### INDEX


| | Page | | Page |
|---|---|---|---|
| Assembling the Power Brake | 22 | Installing the Power Brake | 23 |
| Cleaning and Inspection | 21 | Removing the Power Brake | 19 |
| Disassembling the Power Brake | 19 | Service Diagnosis | 18 |
| General Information | 18 | | |


### GENERAL INFORMATION

The Midland Ross power brake (Fig. 1) is located on the engine side of the dash panel. The forward cover of the vacuum cylinder supports the master cylinder. The power brake derives its power from the intake manifold vacuum and atmospheric pressure. It does not require a vacuum reservoir.

### SERVICE DIAGNOSIS

| Condition | Possible Cause | Correction |
|---|---|---|
| **DRAGGING BRAKES (ALL WHEELS)** | (a) Brake shoes improperly adjusted. | (a) Adjust the brakes. |
| | (b) Brake pedal linkage binding. | (b) Free up the linkage. |
| | (c) Excessive hydraulic seal friction. | (c) Lubricate the seal. |
| | (d) Compensator port plugged. | (d) Clean out the master cylinder. |
| | (e) Sticking valve plunger. | (e) Free up and lubricate the valve plunger. |

MyMopar.com

| Condition | Possible Cause | Correction |
|---|---|---|
| | (f) Improper booster push rod length adjustment. | (f) Adjust the push rod. |
| | (g) Fluid cannot return to master cylinder. | (g) Inspect the pedal return and push rod adjustment. |
| | (h) Parking brake not returning. | (h) Free up as required. |
| | (i) Improperly staked valve sleeve. | (i) Replace valve assembly. |
| **GRABBING BRAKES** | (a) Grease or brake fluid on linings. | (a) Inspect for a leak and replace the lining as required. |
| | (b) Sticking actuating valve. | (b) Free up the valve. |
| **PEDAL GOES TO FLOOR (OR ALMOST TO FLOOR)** | (a) Self-adjusters not operating. | (a) Inspect the self-adjuster operations. |
| | (b) Air in hydraulic system. | (b) Bleed the brakes. |
| | (c) Hydraulic leak. | (c) Locate and correct the leak. |
| | (d) Fluid low in master cylinder. | (d) Add brake fluid. |
| | (e) Shoe hanging up on rough platform. | (e) Smooth and lubricate the platforms. |
| | (f) Broken plunger stem. | (f) Replace valve plunger assembly. |
| **HARD PEDAL (POWER UNIT TROUBLE)** | (a) Faulty vacuum check valve. | (a) Replace the check valve. |
| | (b) Collapsed or leaking vacuum hose. | (b) Replace the hose. |
| | (c) Plugged vacuum fittings. | (c) Clean out the fittings. |
| | (d) Leaking vacuum chamber. | (d) Locate and correct the leak. |
| | (e) Diaphragm assembly out of place in housing. | (e) Position the diaphragm. |
| | (f) Vacuum leak in forward vacuum housing. | (f) Locate and correct the leak. |

## SERVICE PROCEDURES

### REMOVING THE POWER BRAKE

Should it become necessary to remove the power brake for repair or overhaul, refer to (Fig. 1) and proceed as follows:

(1) With engine turned off, apply brakes several times to balance internal pressure of brake.

(2) Disconnect hydraulic brake line from master cylinder.

(3) Disconnect vacuum hose from power brake.

(4) From under instrument panel, remove nut and attaching bolt from power brake push rod and brake pedal linkage.

(5) Remove four power brake attaching nuts and washers.

(6) Remove power brake and master cylinder from vehicle and place on a service bench for further disassembly.

### DISASSEMBLING THE POWER BRAKE

To disassemble the power brake unit for repair or overhaul refer to (Fig. 2) then proceed as follows:

(1) Remove four nuts that attach master cylinder to power brake unit. Remove master cylinder.

(2) Remove air filter cover assembly from power brake unit, separate the cover and retainer, then move air filter (Fig. 3).

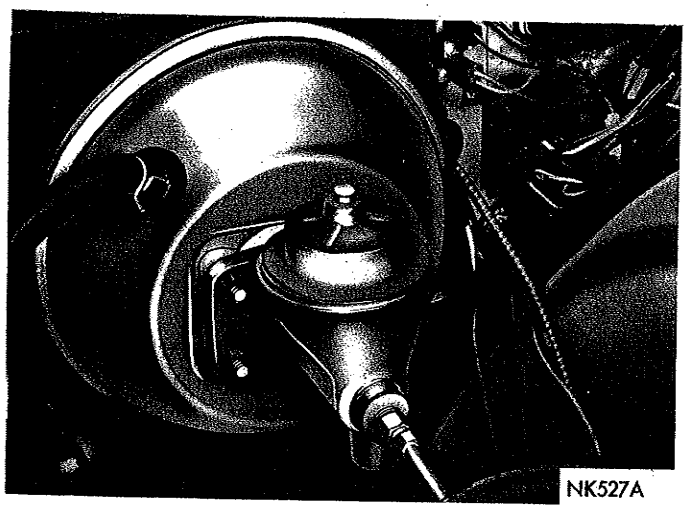


*Fig. 1—Power Brake and Master Cylinder*

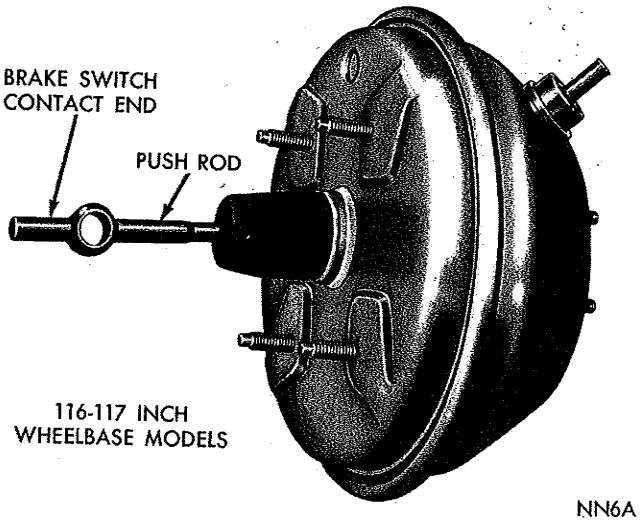


*Fig. 2—Power Brake Assembly*

MyMopar.com

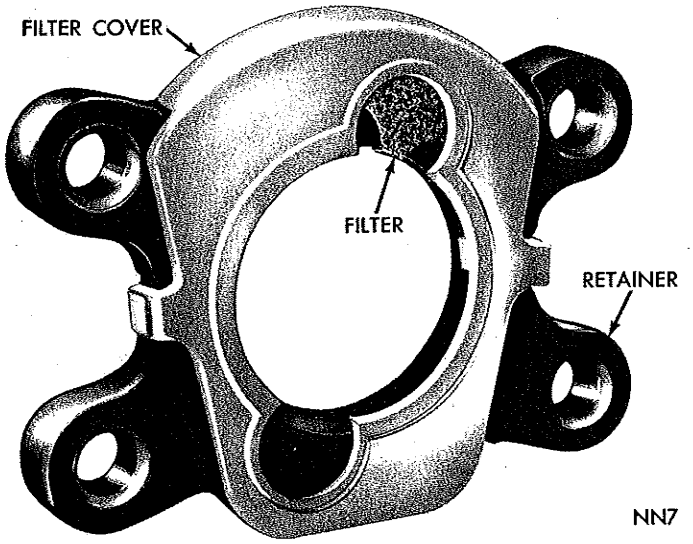


*Fig. 3—Filter, Retainer and Cover Assembly*

(3) Remove check valve and rubber grommet from power brake unit.

(4) Remove rubber boot from operating rod.

(5) Scribe a line across front cover, clamp band and rear cover (Fig. 4).

(6) Push bellows lip into vacuum chamber to separate bellows, control valve and diaphragm assembly from front and rear covers (Fig. 5).

(7) Remove clamp band screw and nut and remove clamp band. Separate front and rear covers.

(8) Remove rear seal from rear cover (Fig. 6).

(9) Remove bellows clamp and support rings from bellows (Fig. 7).

(10) Remove bellows from control hub (Fig. 8).

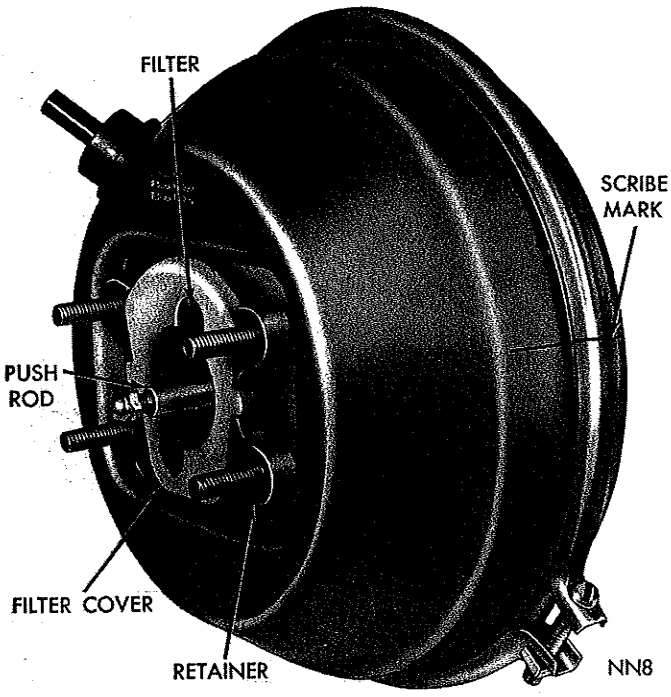


*Fig. 4—Scribe Marks on Front Cover Clamp Band and Rear Cover*

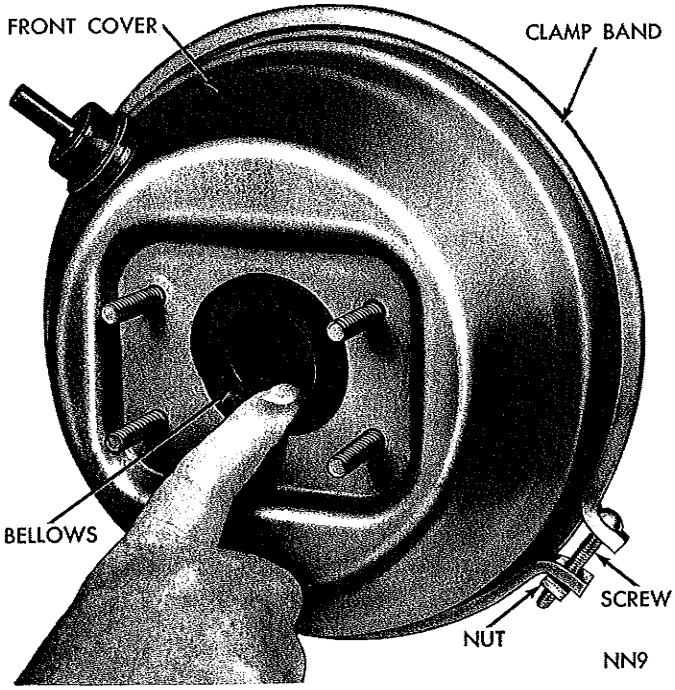


*Fig. 5—Separating the Bellows from the Front Cover*

(11) Remove push rod and reaction lever assemblies (Fig. 9) from control hub.

(12) Remove two plastic push rod guides, cone retainer and reaction cone from push rod (Fig. 10).

(13) Remove operating rod from plunger, by holding rod firmly and forcing plunger off rod; shearing plastic retaining ring. (If plunger is to be used again, remove all broken pieces of plastic retaining ring from groove in plunger.)

(14) Using Tool C-3984, turn control hub clockwise while holding power piston (Fig. 11). Separate tail stock and "O" ring from diaphragm.

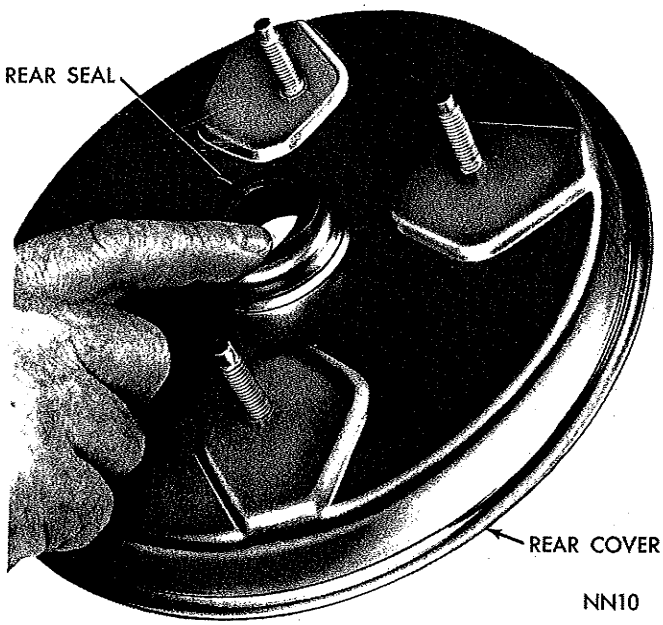


*Fig. 6—Removing the Seal from the Rear Cover*

MyMopar.com

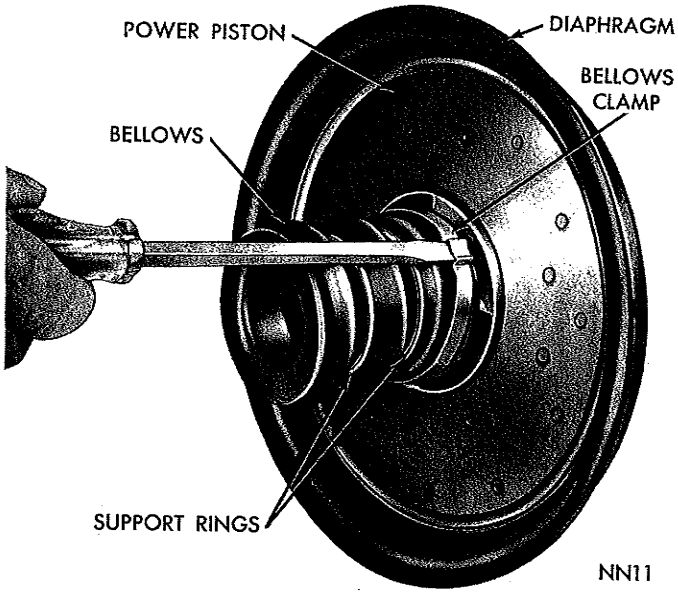


*Fig. 7—Removing the Bellows Clamp*

(15) Using snap ring pliers, remove retainer that holds plunger to control hub (Fig. 12). Separate control hub and plunger assembly (Fig. 13). **It may be necessary to file any burrs that protrude from end of plunger before it is removed from control hub. A score in this area can cause a leak.**

(16) Using a screwdriver, compress spring toward rubber valve, then remove spring retainer (Fig. 14).

(17) Disassemble plunger by removing spring, washer, rubber valve, "O" ring, spring seat and fibre washer (Fig. 15).

## CLEANING AND INSPECTION

Thoroughly wash all the metal parts in a suitable solvent and dry with compressed air. The power piston diaphragm, control hub and all plastic parts should be washed in a mild soap solution and water. Using air pressure, blow out all internal passages. All rubber parts should be replaced regardless of condition. Install new air filter at reassembly.

Inspect all parts for scoring, pitting, dents or nicks, small imperfections can be smoothed out, using crocus cloth. Replace all parts that are badly scored, nicked or damaged.

At reassembly, coat all rubber parts, (including the

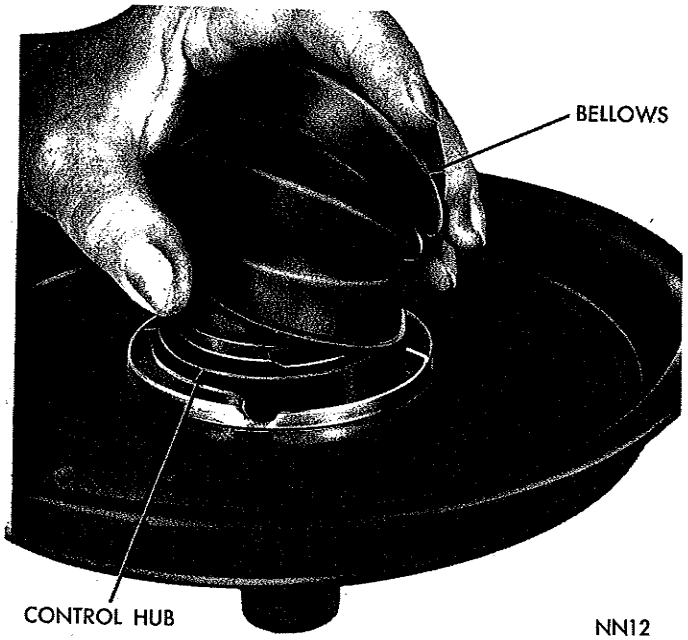


*Fig 8—Removing or Installing the Bellows*

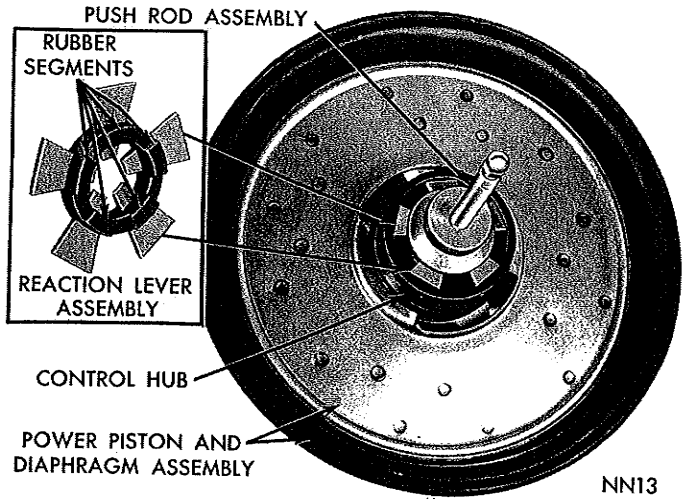


*Fig. 9—Push Rod, Reaction Lever and Control Hub*

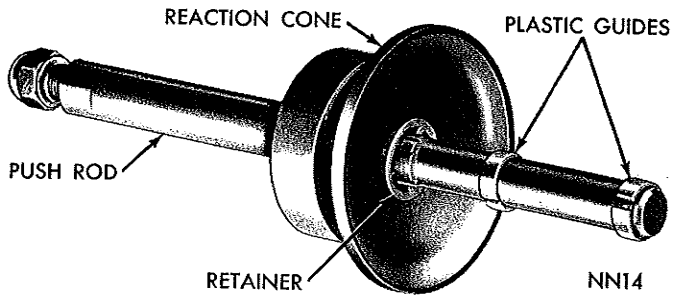


*Fig. 10—Push Rod Assembly*

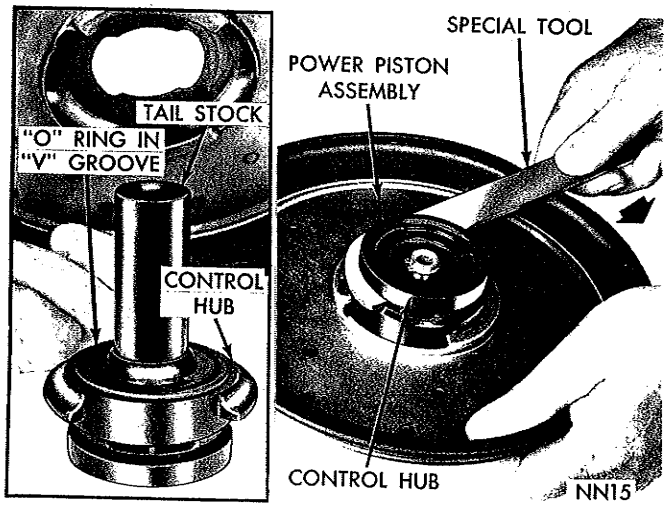


*Fig. 11—Removing the Control Hub from the Power Piston*

MyMopar.com

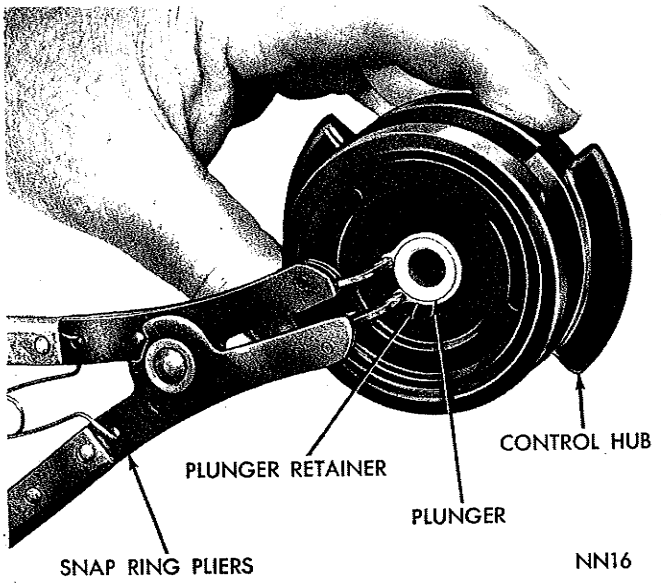


***Fig. 12—Removing or Installing the Plunger Retainer***

diaphragm), with silicone grease.

## ASSEMBLING THE POWER BRAKE

To reassemble the power brake after cleaning and inspection, proceed as follows:

(1) Install rubber valve, spring seat, spring, "O" ring and fibre washer on plunger (Fig. 15).

(2) Using a screwdriver, compress spring towards rubber valve then install spring retainer on plunger, with flange toward spring (Fig. 14).

(3) Install control valve plunger into control hub (Fig. 13) so that round holes in rubber valve index with raised projections on hub and flat side on spring seat mates with flat projection on hub.

(4) Compress valve spring and install retainer in plunger groove, using snap ring pliers (Fig. 12), thus securing control valve plunger in control hub.

(5) Install tail stock over plunger, with flat on tail stock mating with flat surface on hub.

(6) Install "O" ring over tail stock and into "V" groove formed by tail stock and hub (Fig. 11 insert).

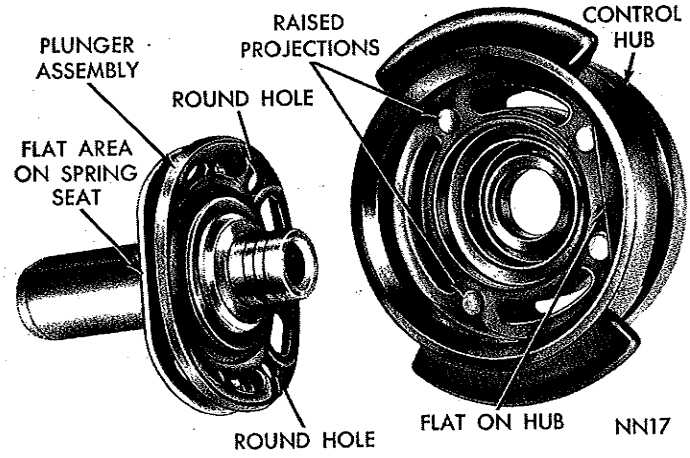


***Fig. 13—Control Housing and Plunger Assembly***

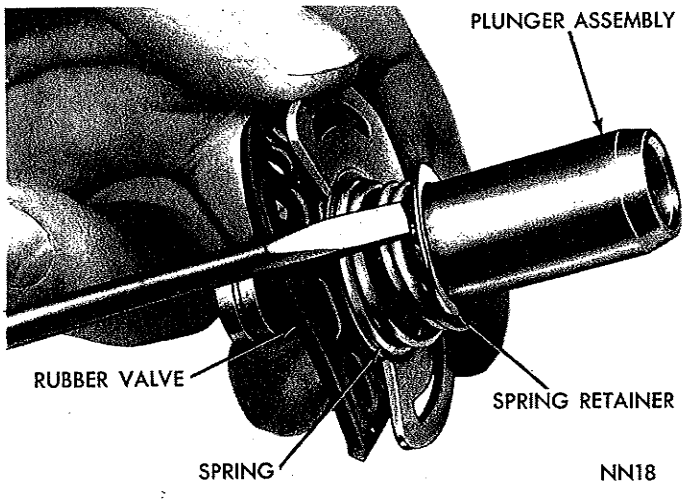


***Fig. 14—Removing or Installing the Spring Retainer***

(7) Lower power piston assembly over tail stock and control hub and seat. Using Tool C-3984, turn control hub counterclockwise to lock in place (Fig. 16).

(8) Install lever assembly in control hub with rubber segments toward control hub.

(9) Slide reaction cone over push rod (Fig. 10), then install retainer. Install two plastic guides on push rod. Install push rod assembly in valve hub so that push rod indexes in valve plunger (Fig. 9).

(10) Slide two bellows support rings over bellows and down into position in two larger folds (Fig .17).

(11) Slide bellows over control hub until lip of bellows slides into recess of hub (Fig. 8). Secure bellows on hub by using a new clamp on diaphragm end of bellows (Fig. 17).

(12) Slide rear seal into rear cover (Fig. 6) and position diaphragm, control valve components, and bellows as an assembly into rear cover (Fig. 17).

(13) Install rubber grommet in front cover with larger diameter side on outside of unit. Install check valve assembly through grommet.

(14) Assemble front cover to rear cover. (Make sure lip of diaphragm is evenly positioned on retaining radius of front and rear covers.) Now, pull front lip of bellows through front cover and position evenly around diameter of hole (Fig. 5).

(15) Install clamp band over lips of front cover and rear cover. Align scribe lines, compress assembly together, and secure with clamp band bolt (Fig. 4). Tap clamp band with a fibre hammer around its circumference as bolt is being tightened. Tighten to 10 inch-pounds (Min.).

(16) Install rubber boot to operating rod and assemble plastic retainer to end of rod. Insert rod into plunger so that retainer engages groove in plunger. Install lip of boot in groove of rear seal.

(17) Position air filter in plastic filter cover then snap cover and filter on metal hub with filter between

MyMopar.com

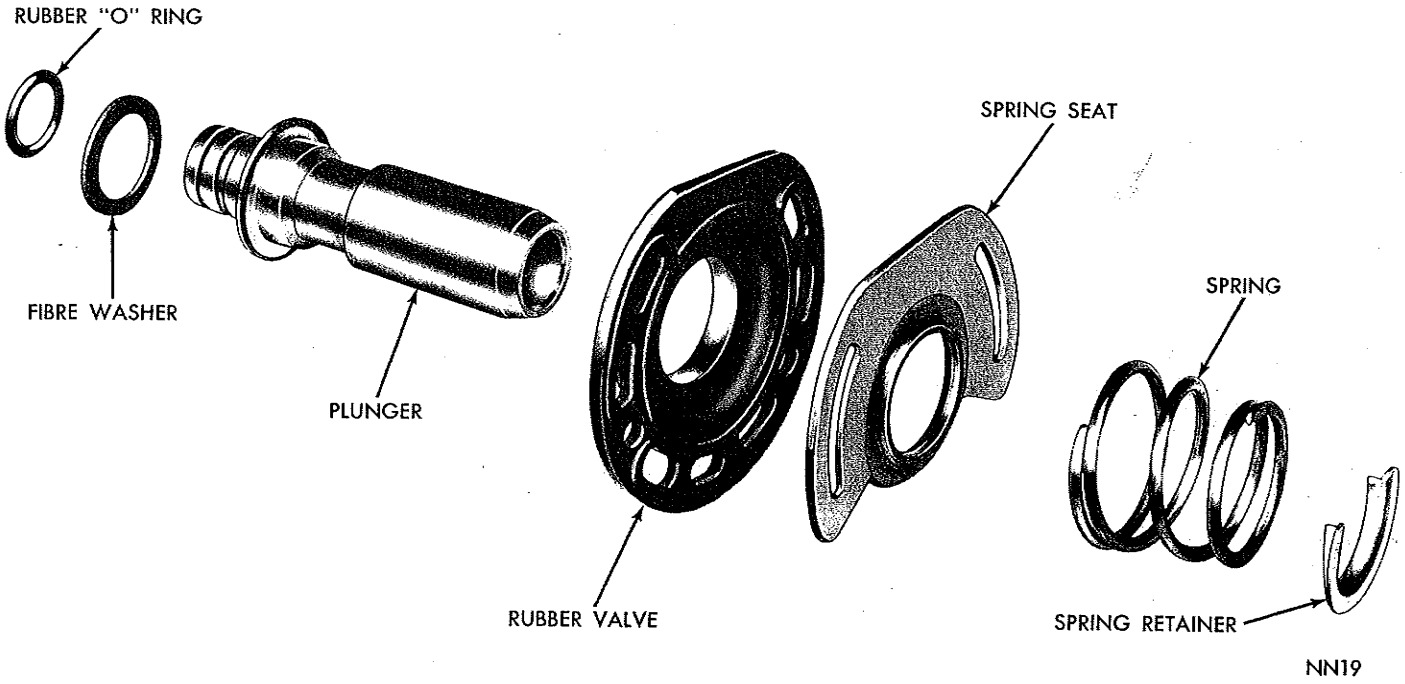


***Fig. 15—Plunger Assembly, Exploded View***

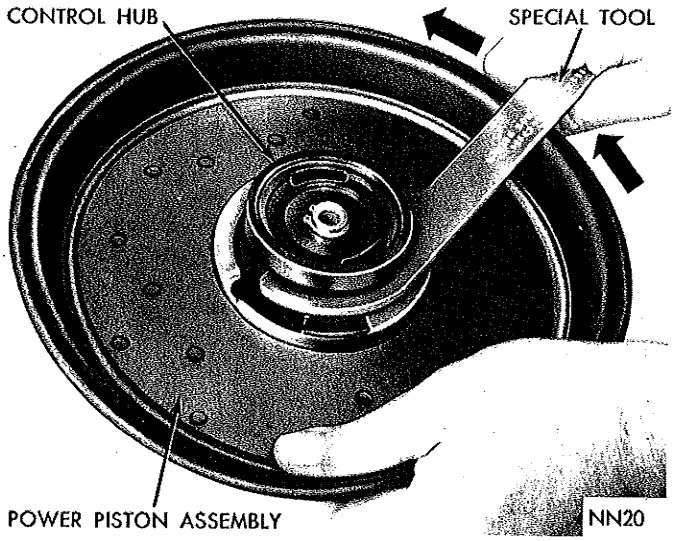


***Fig. 16—Installing the Control Hub to the Power Piston***

(Fig. 3).

(18) Assemble cover, filter, and retainer assembly to unit with metal retainer against cover.

(19) Install master cylinder on power brake. Tighten mounting nuts to 100 inch-pounds.

## INSTALLING THE POWER BRAKE

(1) Install power brake assembly into dash and tighten attaching nuts 200 inch-pounds.

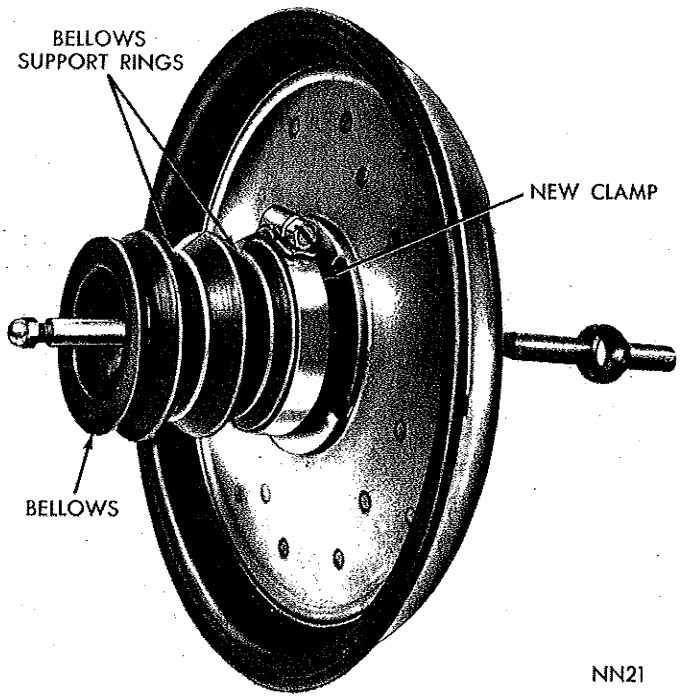


***Fig. 17—Bellows Installed on the Power Piston***

(2) Connect brake line and vacuum hose.

(3) Install push rod to brake pedal attaching bolt and nut, and tighten to 30 foot-pounds.

(4) Refill master cylinder and bleed brakes.

MyMopar.com

# BENDIX POWER BRAKE

## INDEX


| | Page | | Page |
|---|---|---|---|
| Assembling the Power Brake | 25 | Push Rod Adjustment | 26 |
| Cleaning and Inspection | 25 | Removing the Power Brake | 24 |
| Disassembling the Power Brake | 24 | Service Diagnosis | 1 |
| General Information | 24 | Servicing the Master Cylinder | 26 |
| Installing the Power Brake | 27 | | |


## GENERAL INFORMATION

The master and vacuum cylinder is mounted directly to the engine side of the dash panel. The vacuum piston is hooked directly to the suspended brake pedal by a valve operating rod.

The Bendix Power Brake Unit can be identified by the bolted edge method of attaching the housing and cover together.

## SERVICE PROCEDURES

### REMOVING THE POWER BRAKE

(1) Disconnect vacuum line from vacuum cylinder.

(2) Disconnect hydraulic brake line from master cylinder.

(3) Under instrument panel, disconnect push rod from brake pedal linkage.

(4) Remove four attaching nuts from brake unit mounting bracket to dash and remove unit from car.

### DISASSEMBLING THE POWER BRAKE

To disassemble the power brake unit for repair or overhaul, refer to (Fig. 1), then proceed as follows:

(1) Clean all dirt from master cylinder cover and remove cover.

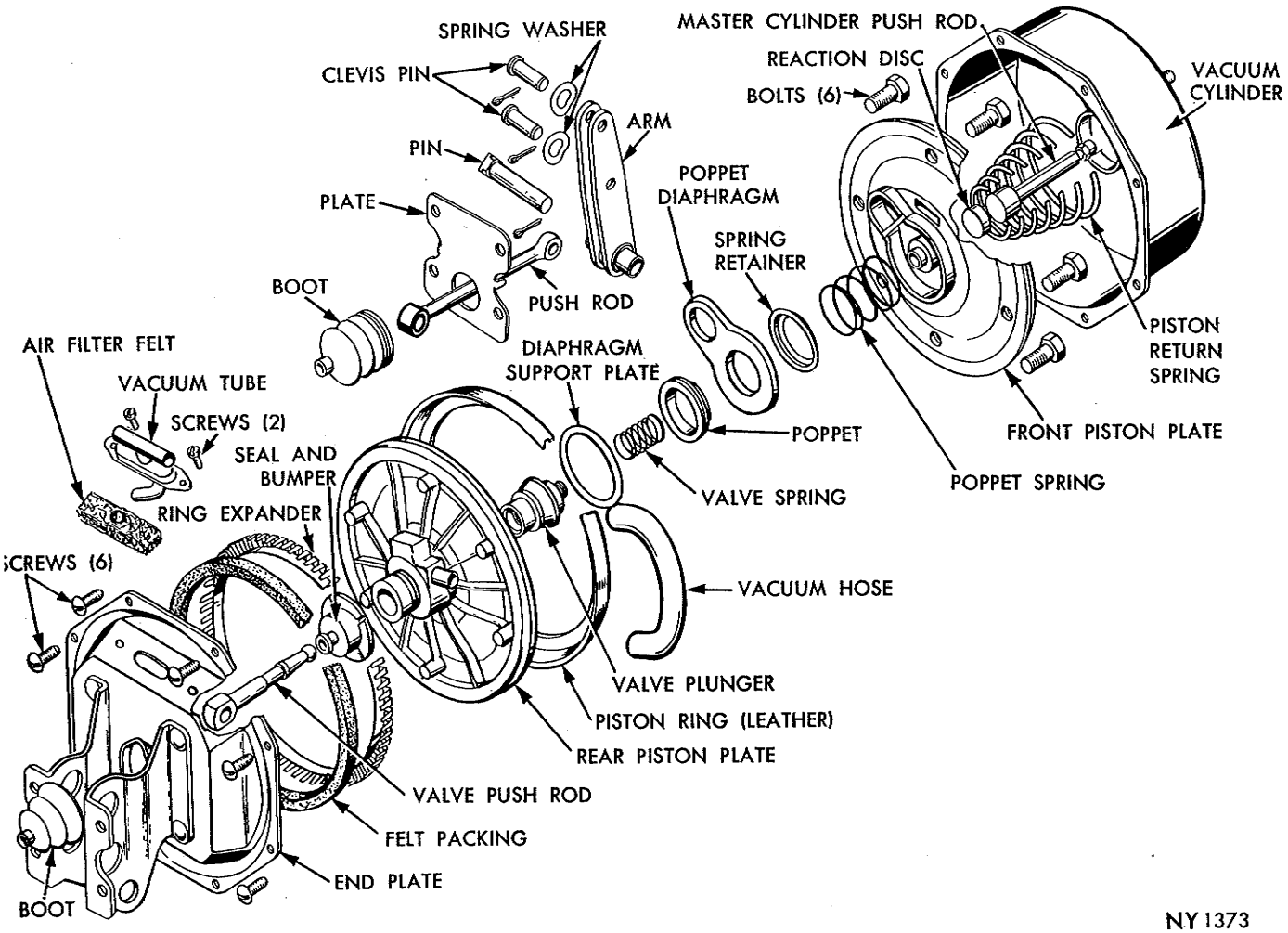


*Fig. 1—Power Brake Assembly*

MyMopar.com

(2) Apply pressure to power lever and insert a 1/8" wire or rod in large hole in brake reservoir, retaining master cylinder piston in cylinder.

(3) Remove master cylinder from front end of vacuum assembly and remove master cylinder push rod from power brake unit. Remove the gasket.

(4) Remove cotter pin and clevis pin from upper end of power lever (Fig. 1).

(5) Remove rubber dust cover from valve rod.

(6) Scribe alignment mark across end plate and vacuum cylinder to assure proper reassembly.

(7) Remove 6 of the 8 end plate attaching screws leaving 2 remaining screws opposite each other.

(8) Place vacuum unit on bench with end plate up.

(9) Apply light hand pressure to end plate to hold piston and return spring in place then remove the 2 remaining end plate attaching screws.

(10) Relax retaining pressure on end plate and expose vacuum piston.

(11) Scribe alignment mark on face of piston to coincide with cover and cylinder scribe mark, to insure alignment on reassembly.

(12) Remove vacuum hose from end plate and vacuum piston.

(13) Remove end plate, piston and piston return spring.

(14) Remove air cleaner attaching screws, air cleaner assembly and filter from end plate.

(15) Remove piston felt and expander ring from piston assembly.

(16) Refer to (Fig. 1), remove seal and bumper from front of piston plate.

(17) Place inverted piston assembly on two wooden blocks and remove 6 piston plate bolts (Fig. 2). Hold piston plates together by hand so poppet spring and valve return spring do not become dislodged from their relative positions.

(18) Carefully separate piston plates and remove leather piston ring.

(19) Remove poppet spring (outer), valve return spring (inner), poppet spring retainer, poppet diaphragm and poppet.

(20) Using a blunt wooden rod, push out rubber reaction disc from front piston plate. **Do not separate valve operating rod and valve plunger, this is serviced as a unit.**

## CLEANING AND INSPECTION

Clean all metal parts in a suitable solvent then blow dry with compressed air (including recesses and internal passages). Wash rubber parts in clean alcohol. After parts are cleaned, place on clean paper or cloth and inspect as follows:

Inspect all parts for wear or damage. Replace worn or damaged parts with new. Check the inside of the vacuum cylinder. If cylinder is rusted or corroded, polish with fine steel wool or crocus cloth. If inspection reveals nicks or scratches on the piston rod, valve seat (on end of valve rod) or valve seat (at center of piston plate) install new parts at assembly as required. Check the leather packing and piston rod leather seal. If worn excessively, install new parts as required.

## ASSEMBLING THE POWER BRAKE

(1) Using vacuum cylinder oil, saturate piston felt and permit excess oil to drip off.

(2) Place assembly fixture Tool C-3816 on two wooden blocks and insert leather piston ring in fixture with lip up (Fig. 3).

(3) Assemble felt ring into expander and install expander and felt in groove of rear piston plate.

(4) Hold felt and expander compound in piston plate and install rear piston plate into leather piston ring.

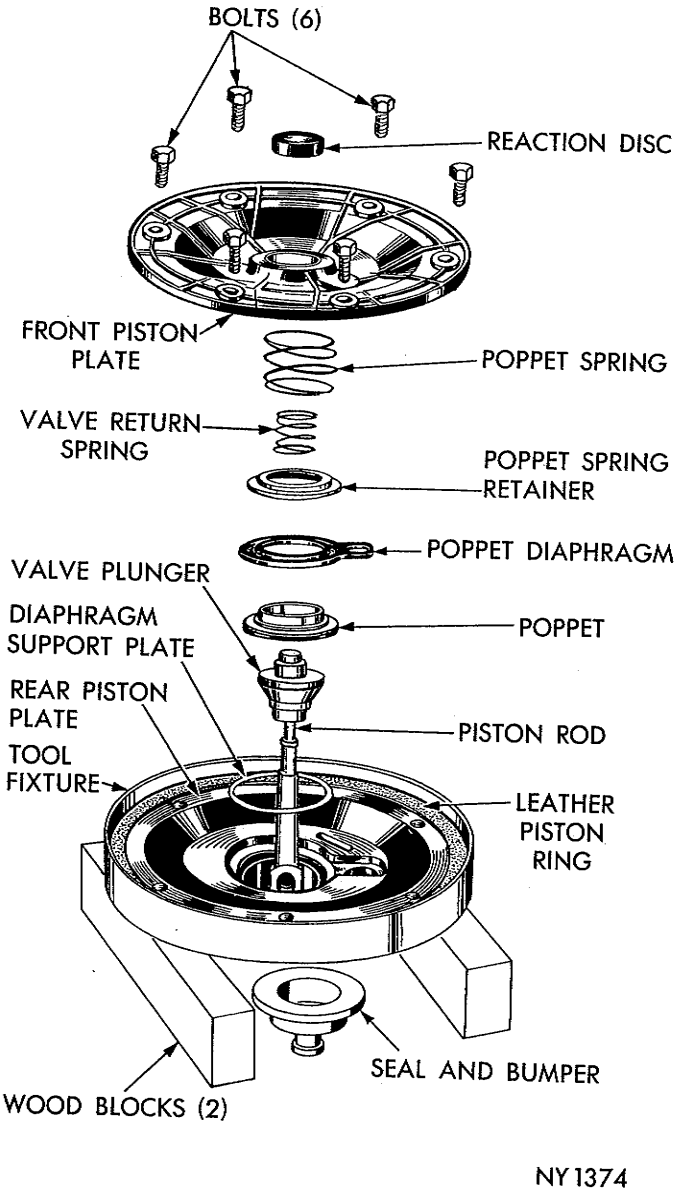


*Fig. 2—Power Brake Piston Unit*

MyMopar.com

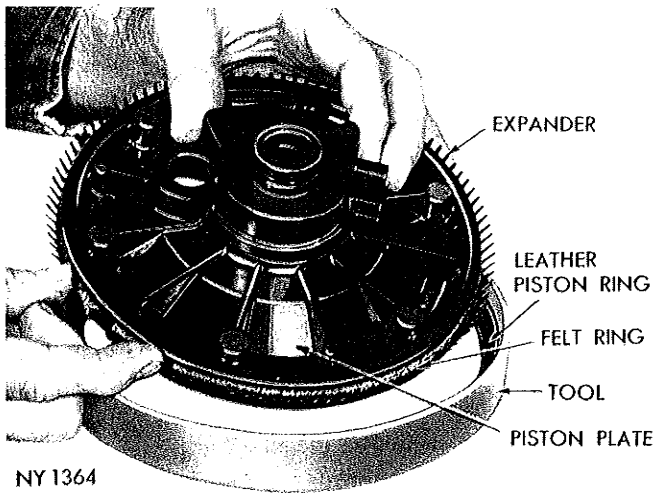


***Fig. 3—Assembling Piston Ring, Felt and Expander***

(5) Holding rear piston plate, felt and leather piston ring into assembly fixture, invert the assembly and place on 2 wooden blocks.

(6) Apply a light coating of lubricant to valve plunger and both faces of reaction disc.

(7) Install reaction disc in hub of front piston (Fig. 2).

(8) Insert eye end of valve rod through hole of rear piston plate.

(9) Install diaphragm support in hub of rear piston plate.

(10) Place flat side of poppet diaphragm over flange of poppet and install poppet assembly in recess of rear piston plate.

(11) Install poppet spring retainer over end of poppet and install valve return spring and poppet return spring.

(12) Align front and rear piston plates and install 6 attaching screws finger tight. Progressively tighten every other screw lightly until all are tightened to 55 inch-pounds.

(13) Assemble air cleaner filter over vacuum tube of air cleaner assembly and attach assembly to end plate and tighten attaching screws (Fig. 1).

(14) Install rubber vacuum hose to inlet tube of power piston and align hose to lay flat against piston.

(15) Remove vacuum piston assembly from assembly ring, and coat inside of vacuum cylinder and leather packer ring of piston with a thin coating of vacuum cylinder oil.

(16) Install end plate over valve operating rod of piston assembly and attach vacuum hose to inlet tube of air cleaner assembly.

(17) Center small end of piston return spring in vacuum cylinder.

(18) Align scribe marks of end plate, piston assembly and cylinder, then install piston and end plate, centering large end of return spring on piston assembly.

(19) Compress spring and install two attaching screws in end plate opposite each other.

(20) Install balance of attaching screws and tighten uniformly.

(21) Install dust cover over valve rod and flange of the end plate.

(22) Install spring washer between valve push rod and power lever linkage, then install clevis pin and cotter pin.

(23) With a rotating motion install large end of hydraulic push rod into hub of front piston plate.

(24) Press and rotate push rod firmly against rubber reaction disc to insure expulsion of any air pocket between push rod and disc.

## PUSH ROD ADJUSTMENT

Unless the master cylinder push rod has been replaced, no adjustment of the push rod should be needed. The self locking screw on the end of the push rod is set to the correct height on original assembly. If the push rod has been replaced or the adjustment altered, adjust as follows:

(1) With piston assembly free in cylinder and firmly seated in a released position, hold push rod seated against reaction disc and centered in spring of cylinder.

(2) Adjust self-locking screw so that head of screw is 0.933 to 0.943 inch from face of vacuum cylinder (Fig. 4). Fabricate a gauge if necessary to obtain correct adjustment.

## SERVICING THE MASTER CYLINDER

The master cylinder can be bled and the push rod end assembled at the proper length, as described in the Service Brake Section of this Manual. (The service procedures covering the power brake master cylinder.)

The master cylinder push rod is a part of the power brake and is not retained in the master cylinder piston. On removing the master cylinder from the power brake, the piston and cups may drop out of the cylinder.

To prevent this from happening, proceed as follows:

(1) Clean all dirt from master cylinder cover and remove cover.

(2) Lightly depress brake pedal and insert ⅛" wire or drill through large hole in brake reservoir to retain

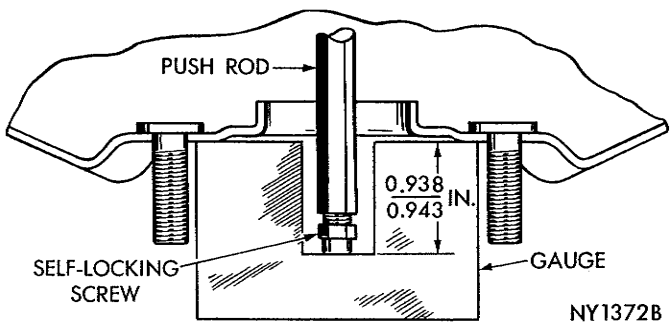


***Fig. 4—Master Cylinder Push Rod Height Gauge***

MyMopar.com

piston in master cylinder.

(3) Proceed with master cylinder reconditioning as recommended.

(4) After reconditioning, reinstall wire in inlet port for assembly to power brake.

(5) Lightly apply pedal and remove wire from inlet port and fill master cylinder.

(6) Install cover and bleed hydraulic system.

## INSTALLING THE POWER BRAKE

(1) Holding master cylinder piston into cylinder as recommended, place master cylinder on the attaching studs of brake unit. Tighten nuts to 100 inch pounds.

(2) Place power brake unit on mounting studs of firewall and install four attaching nuts. Tighten to 100 inch-pounds.

(3) Connect push rod to brake pedal linkage.

(4) Attach brake line to master cylinder.

(5) Attach vacuum hose to power brake.

(6) Remove retaining wire from port of master cylinder reservoir.

(7) Fill master cylinder and bleed brake system.

# KELSEY-HAYES POWER BRAKE

## INDEX


| | Page |
|---|---|
| Assembling the Power Brake | 31 |
| Cleaning and Inspection | 30 |
| Disassembling the Power Brake | 28 |
| General Information | 27 |
| Installing the Power Brake | 32 |
| Removing the Power Brake | 28 |
| Service Diagnosis | 1 |


## GENERAL INFORMATION

The power brake (Fig. 1), is a combined vacuum and hydraulic unit which utilizes engine intake manifold vacuum and atmospheric pressure to provide power assisted application of the vehicle brakes. The power unit provides lighter pedal pressure.

This lighter pressure is obtained in combination with a reduced pedal travel, which makes it possible to bring the pedal down to the approximate height of the accelerator pedal when at closed throttle condition. Thus the driver, after closing the throttle, can shift his toe from one pedal to the other without lifting his heel from the floor.

The power brake, which is a self contained unit, eliminates all external rods and levers, and mounts on the engine side of the cowl panel.

The power brake is externally connected to the brake system at three points. The unit is connected by a pedal push rod to the brake pedal, by a vacuum line to the intake manifold (through a vacuum check valve) and a hydraulic tube from the master cylinder to the wheel units.

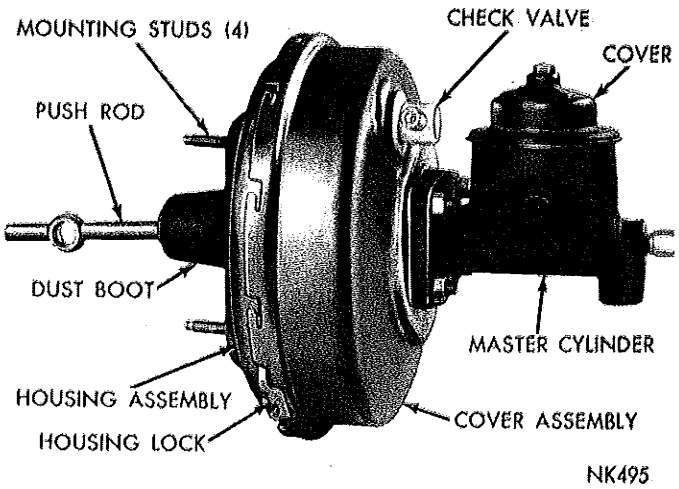


*Fig. 1—Power Brake and Master Cylinder*

### *Power Brake Checks*

(1) Vacuum leak in the released position.

With the transmission in neutral or park position, stop the engine and wait 1 minute. Apply the brake several times. Each application should provide less and less pedal travel, following normal depletion of reserve vacuum.

The number of applications on reserve vacuum assist will depend on how hard the pedal is pressed and how far the pedal moves. If vacuum assist is not present, an air leak is indicated.

(2) Unit Operation

After depleting the reserve vacuum, place light foot pressure on the pedal and start the engine. If the power system is functioning properly, the pedal will fall away slightly.

(3) Vacuum leak in the Holding Position.

With the transmission in neutral or park position, stop the engine while holding a moderately heavy load steadily on the brake pedal. After 1 minute, release and apply the pedal several times. If there is no vacuum assist during this test, but the system was normal during test number 1 above, there is an air leak within the unit. Some units on this test will leak air internally if the pedal load is light. This is a normal condition.

(4) Hydraulic Leak

Depress the brake pedal with light effort while the engine is running, maintaining constant pressure. If the pedal falls noticeably in one minute, the hydraulic system is leaking.

MyMopar.com

If the pedal has a spongy feel when applying the brakes, air may be present in the hydraulic system.

Road test the brakes by making a brake application at about 40 m.p.h. to determine if the vehicle stops evenly and quickly.

If the system checks are satisfactory and the brake pedal travels to within 1 inch of the floor pan, the brake shoes will require an adjustment or replacement.

### *Actuation System Checks*

(1) Check for free operation and return of the brake pedal. If binding exists, check all pivot points for binding and lubricate or free up as required.

(2) Check the stoplight switch for proper setting and operation.

(3) Check the fluid level in the master cylinder reservoir.

(4) Check the vacuum line and connections at the intake manifold and the vacuum check valve for possible vacuum leaks.

(5) Check the engine for good stall free idle and make necessary carburetor adjustments.

## SERVICE PROCEDURES

### REMOVING THE POWER BRAKE

Should it become necessary to remove the power brake for repair or overhaul, refer to (Fig. 1) and proceed as follows:

(1) With engine turned off, apply brakes several times to balance the internal pressure of brake.

(2) Disconnect hydraulic brake line from master cylinder.

(3) Disconnect vacuum hose from power brake check valve.

(4) Remove nut and bolt that attach power brake push rod to pedal linkage. (Under instrument panel.)

(5) Remove nuts and washers that attach power brake unit to dash panel.

(6) Remove power brake and master cylinder from vehicle and place on a service bench for further disassembly. Remove plastic mounting gasket.

### DISASSEMBLING THE POWER BRAKE

To disassemble the power brake, refer to (Figs. 2 and 12), then proceed as follows:

(1) Remove master cylinder from power brake (Fig. 3).

(2) Remove master cylinder push rod and air cleaner plate (Fig. 4).

(3) Install engine lifting fixture C-3804 on two of unit mounting studs. Install flatwashers and nuts to

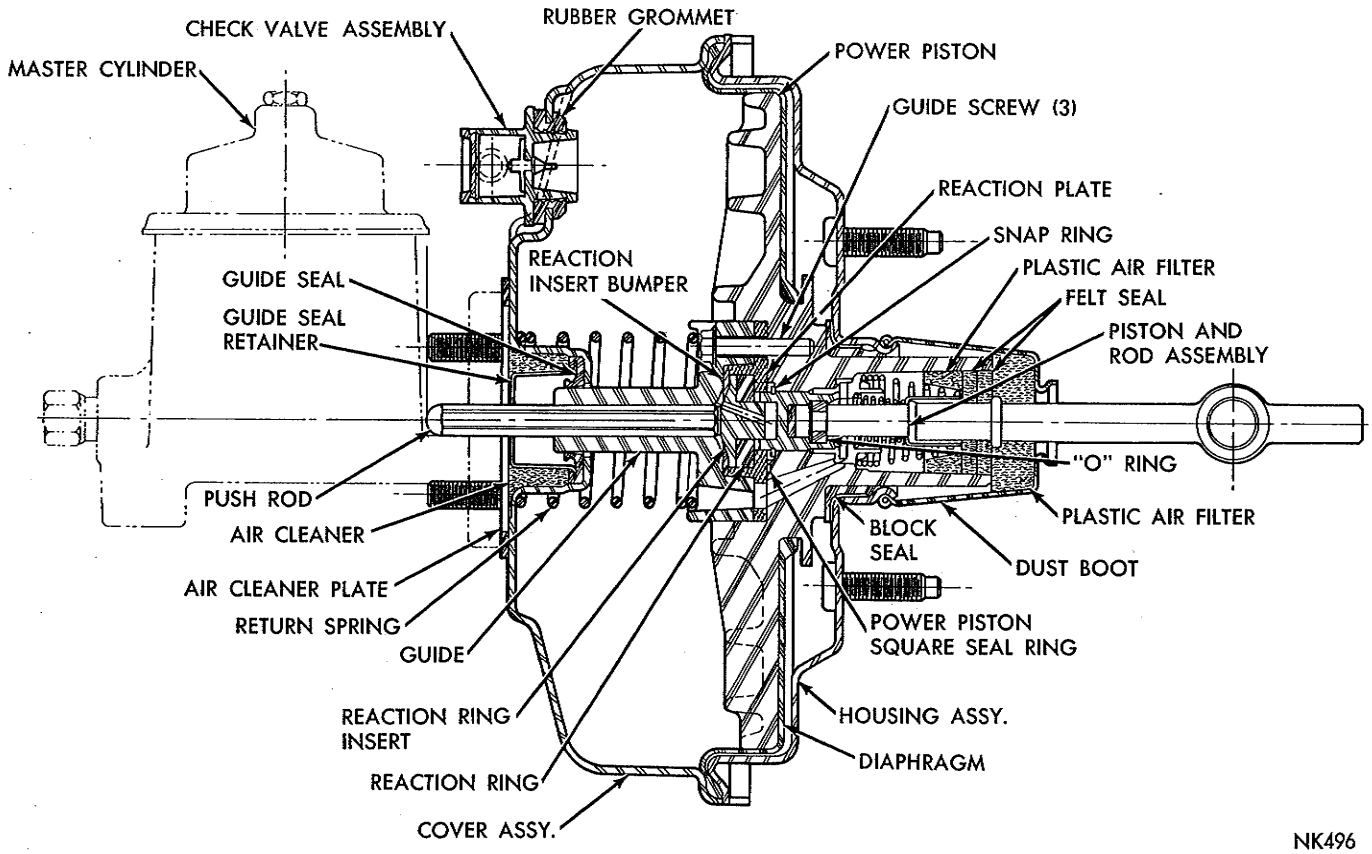


***Fig. 2—Power Brake (Sectional View)***

MyMopar.com

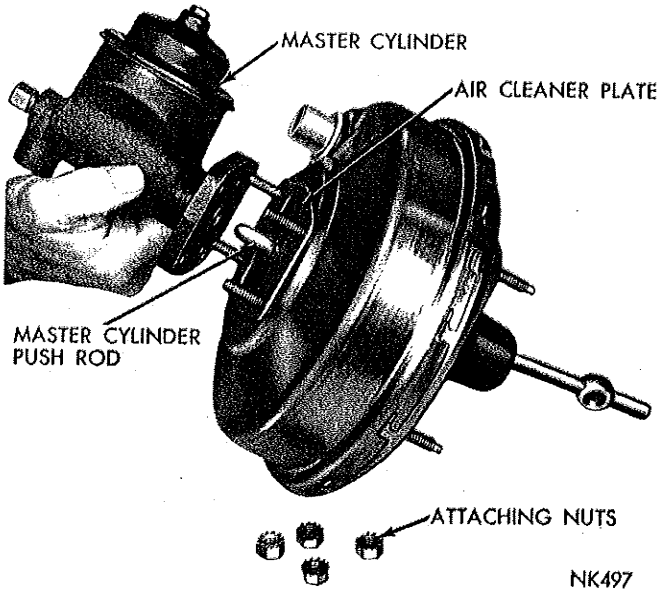


***Fig. 3—Removing or Installing the Master Cylinder***

hold in position.

(4) Install fixture in a vise, then **inscribe a line on both housing and cover.** (To be used at reassembly.)

(5) Pry out housing lock, using a screwdriver (Fig. 5). The lock location is on one of two long tangs on housing. **Do not bend lock at removal, as it must be reinstalled at assembly.**

(6) Remove check valve from cover, by prying out of rubber grommet.

(7) Place Tool C-3281 over master cylinder mounting studs (Fig. 6).

(8) Rotate tool slowly when removing cover as it is under spring pressure. Separate housing and cover to expose power piston return spring and diaphragm (Fig. 7).

(9) Remove cover and lift out power piston return spring.

(10) Remove power piston assembly by slowly lifting straight up (Fig. 8), then lay aside on a smooth clean surface. Remove brake unit from engine lifting

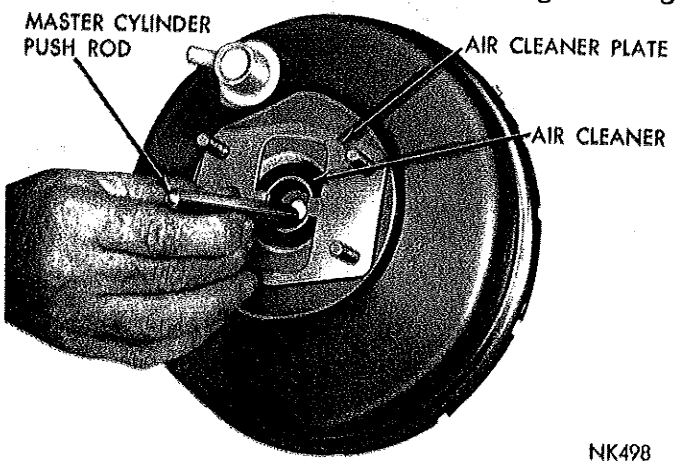


***Fig. 4—Removing or Installing Master Cylinder Push Rod***

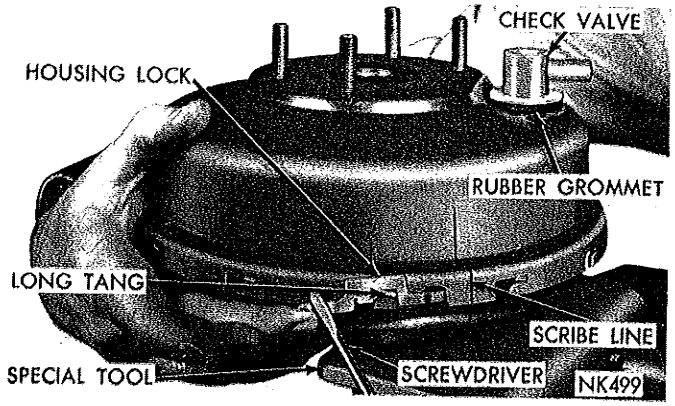


***Fig. 5—Removing the Housing Lock***

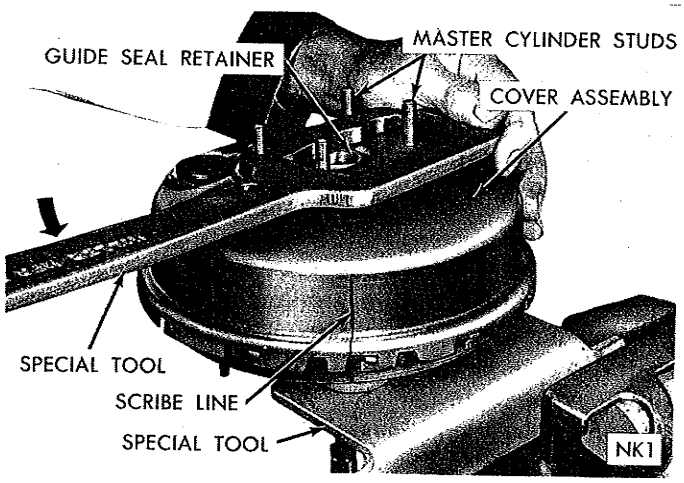


***Fig. 6—Removing or Installing the Cover***

fixture C-3804.

(11) Remove air cleaner, guide seal and guide seal

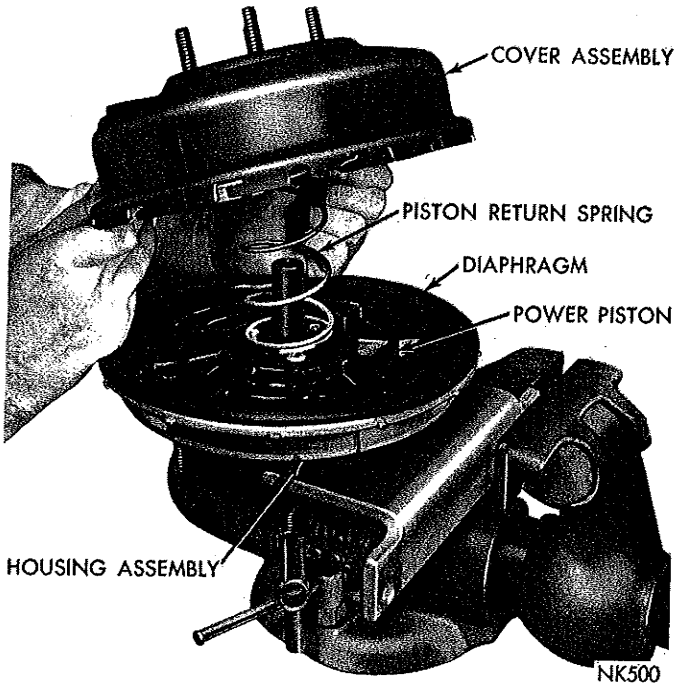


***Fig. 7—Piston Return Spring, Diaphragm and Piston***

MyMopar.com

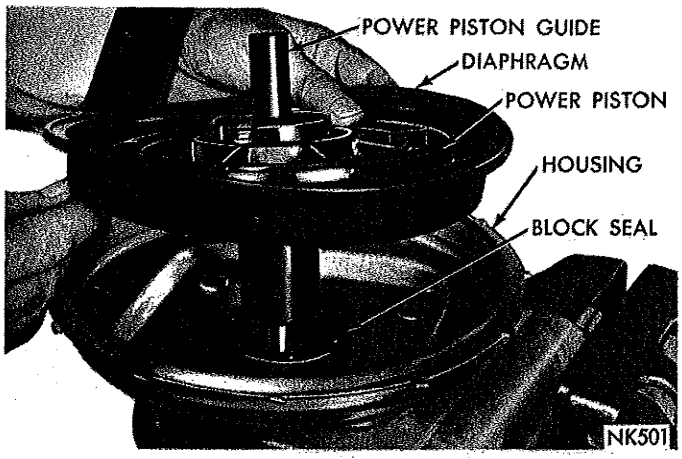


*Fig. 8—Removing or Installing the Power Piston*

retainer from cover (Fig. 9).

(12) Remove block seal located in center hole of housing, using a blunt drift. **Care should be used so as not to scratch bore of housing, which could cause a vacuum leak.**

### *Disassembling The Power Piston*

**Extreme care should be used when handling the power piston diaphragm and metal parts. The diaphragm should be kept clean. Grease, oil and foreign matter can cause a deterioration of the diaphragm. Protect the diaphragm from nicks, or cuts that might be caused by rough surfaces, damaged tools or by dropping the piston.**

(1) Remove power piston diaphragm from power piston and lay it aside on a clean shop towel.

(2) Remove screws that attach plastic guide to plastic power piston (Fig. 10). Remove guide and place to one side.

(3) Remove power piston square seal ring, reaction ring insert, reaction ring and reaction plate. **If reaction plate sticks in power piston, it may be removed by pushing on operating rod. Do not push too far, as damage to floating valve can result.**

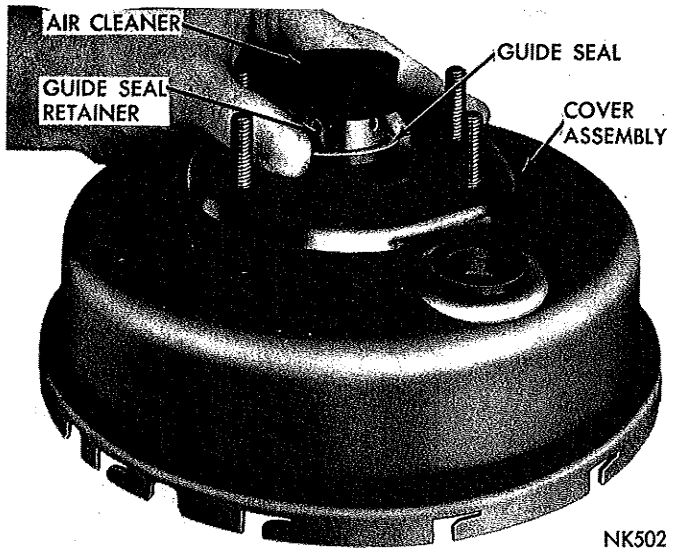


*Fig. 9—Removing or Installing the Air Cleaner, Seal and Retainer*

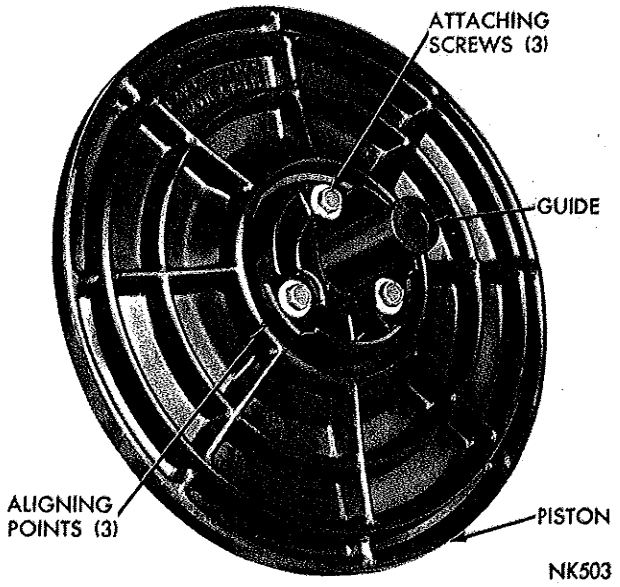


*Fig. 10—Power Piston Guide Attaching Screws*

(4) Depress operating rod slightly, then remove truarc snap ring, using snap ring pliers. (See Fig. 11).

(5) Remove control piston by pulling operating rod straight out of power piston.

(6) Remove "O" seal ring from end of control piston.

(7) Remove filter elements and dust felt from control piston rod.

## CLEANING AND INSPECTION

Thoroughly wash all metal parts in a suitable sol-

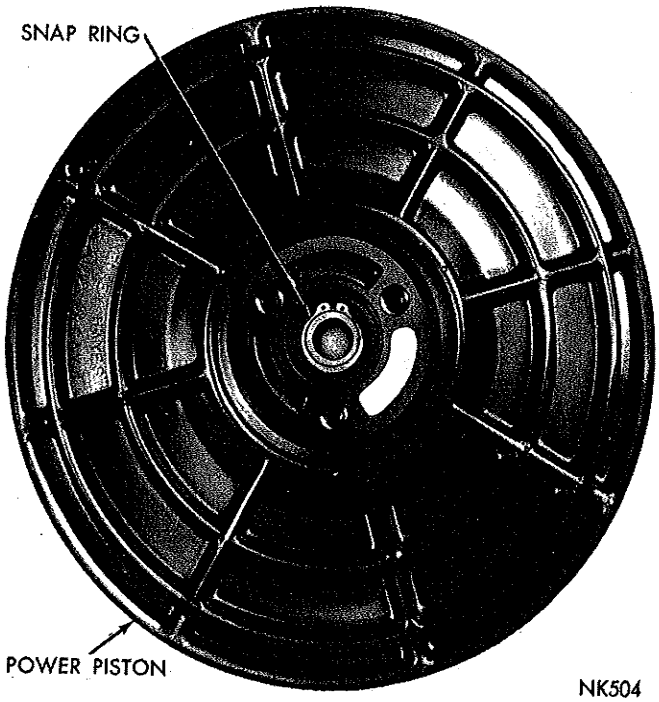


*Fig. 11—Control Piston Snap Ring*

MyMopar.com

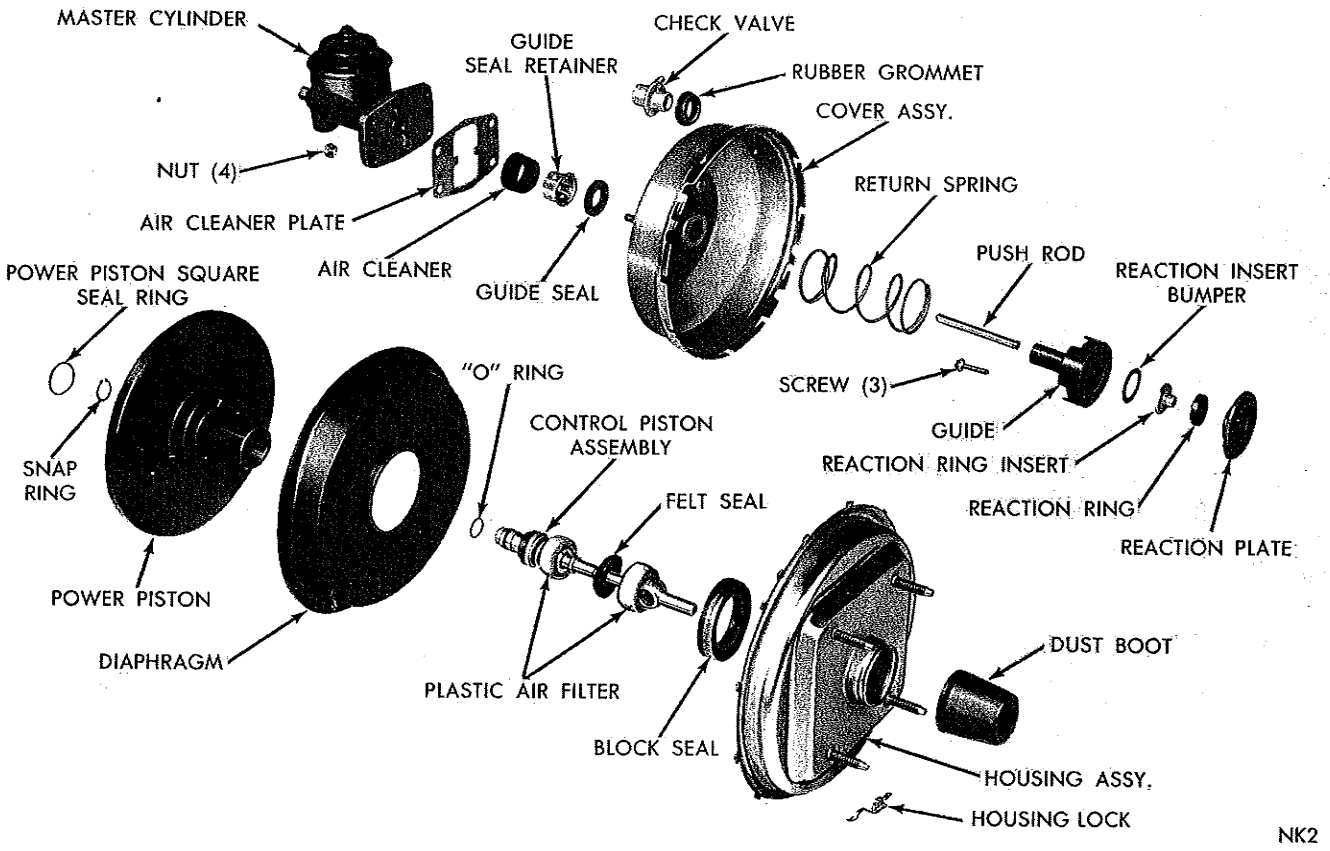


***Fig. 12—Power Brake Assembly***

vent and blow dry with compressed air. The power diaphragm, plastic power piston and guide, should be washed in a mild soap solution and water. Blow dust and cleaning fluid out of all internal passages. All rubber parts should be replaced, regardless of condition. Install new air filters at reassembly. Inspect all parts for scoring, pitting, dents or nicks. Small imperfections can be smoothed out, using crocus cloth. Replace all parts that are badly scored, nicked or damaged. When reassembling, be sure that all rubber parts are well lubricated with silicone grease, except the diaphragm and the reaction ring.

## ASSEMBLING THE POWER BRAKE

To assemble the power brake, refer to (Fig. 12), then proceed as follows:

(1) Install control piston "O" ring on control piston and lubricate with silicone grease.

(2) Lubricate control piston assembly with silicone grease and insert into power piston. Install truarc snap ring in its groove, using snap ring pliers. Refer to (Fig. 11). Wipe all lubricant off end of control piston.

(3) Slide air filter elements and felt seal over push rod and down past retaining shoulder on rod. Install power piston square seal ring in its groove.

(4) Install reaction plate in power piston, aligning three holes with those in power piston, refer to (Fig. 10).

(5) Place rubber reaction ring in reaction plate. **Do not lubricate this ring.**

(6) Lubricate outer diameter of reaction insert with silicone grease and install in reaction ring.

(7) Install reaction insert bumper into guide. **Several small spots of silicone grease will hold bumper in position while guide is being installed into power piston.**

(8) Place guide on power piston, aligning holes with aligning points on power piston. Refer to (Fig. 10). Install retaining screws and tighten from 80 to 100 inch pounds. (Remove any resulting chips.)

(9) Install diaphragm on power piston, making sure that diaphragm is seated in power piston.

### *Assembling The Power Brake Components*

(1) **With housing blocked** to prevent bending, drive block seal into housing, using Tool C-3205 (Fig. 13).

(2) Install a new cover seal on retainer and lubricate thoroughly inside and out with silicone grease, then install in cover bore. Refer to (Fig. 9). Install a new air filter.

(3) Install check valve in a well lubricated grommet in cover. Refer to (Fig. 5).

(4) Reinstall engine lifting bracket Tool C-3804 and clamp in a vise.

MyMopar.com

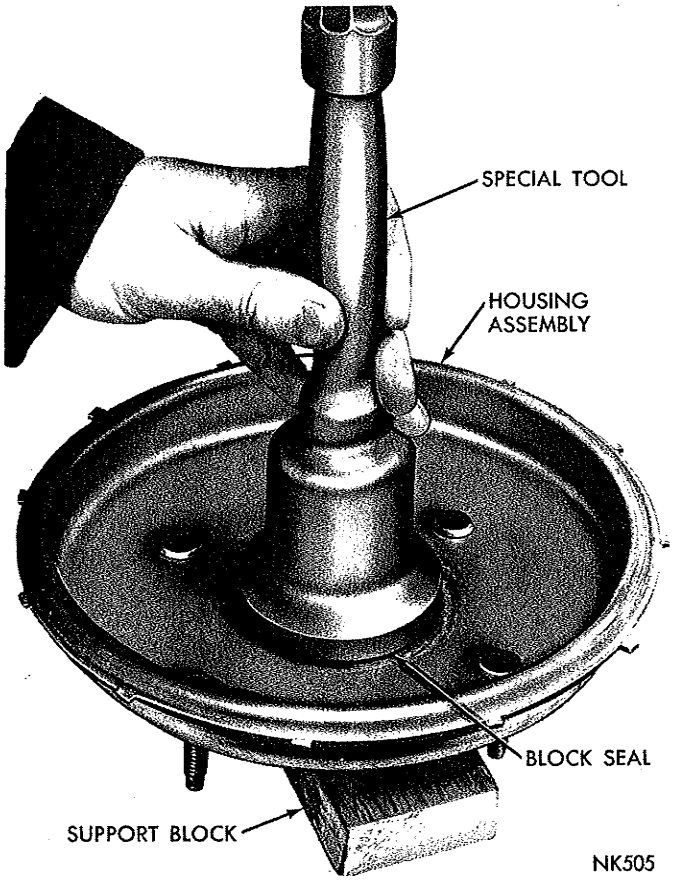


*Fig. 13—Installing the Block Seal in the Housing*

(5) Apply silicone grease to both sides of bead (outer edge) of power piston diaphragm.

(6) Insert power piston assembly into housing with operating rod **down.** Refer to (Fig. 8).

(7) Install power piston return spring in flange of guide.

(8) Place cover over return spring and press down on cover, and at same time lead guide through seal. **(Be sure the scribe lines marked on housing and cover are aligned when parts are locked together.)**

(10) Install housing lock on one of long tangs of housing. Refer to (Fig. 5). **The lock will not be satisfactory if installed incorrectly. If installed on one of short tangs, unit could become unlocked with use.**

(11) Remove unit from vise and remove Tool C-3804 lifting fixture.

(12) Install master cylinder push rod and air cleaner plate, then install master cylinder on studs. Install attaching nuts and washers. Tighten to 200 inch pounds.

## INSTALLING THE POWER BRAKE ON THE VEHICLE

(1) Reinstall dash panel to power brake seal.

(2) Position power brake unit on dash panel, then install attaching nuts and washers and tighten to 200 inch pounds.

(3) Install bolt that connects power brake push rod with brake pedal linkage. Install nut and tighten to 30 foot pounds.

(4) Connect vacuum hose to unit and connect hydraulic brake tube. Tighten securely.

(5) Refill master cylinder reservoir and bleed brakes.

(6) Readjust stoplight switch if necessary.

(7) Test power brake unit, (refer to General information).

# BUDD DISC BRAKES

## INDEX


| | Page | | Page |
|---|---|---|---|
| Assembling the Caliper | 38 | General Information | 34 |
| Assembling the Master Cylinder | 40 | Installing the Braking Disc and Hub | 39 |
| Brake Shoe Installation | 36 | Installing the Caliper | 38 |
| Brake Shoe Removal | 35 | Installing the Master Cylinder | 41 |
| Cleaning and Inspection (Caliper) | 37 | Removing the Braking Disc and Hub | 39 |
| Cleaning and Inspection (Master Cylinder) | 40 | Removing the Caliper | 36 |
| Disassembling the Caliper | 37 | Removing the Master Cylinder | 39 |
| Disassembling the Master Cylinder | 39 | Service Diagnosis | 32 |


## SERVICE DIAGNOSIS

| Condition | Possible Cause | Correction |
|---|---|---|
| **EXCESSIVE PEDAL TRAVEL** | (a) Excessive disc runout. | (a) Check disc for runout with dial indicator. Install new disc. |
| | (b) Air, leak, or insufficient fluid in system or caliper. | (b) Check system for leaks. |
| | (c) Improper brake fluid (boil). | (c) Drain and install correct fluid. |
| | (d) Rear brake adjustment required. | (d) Check and adjust rear brakes. |
| | (e) Warped or excessively tapered shoe and lining assembly. | (e) Install new shoe and linings. |
| | (f) Loose wheel bearing adjustment. | (f) Readjust wheel bearing to specified |

MyMopar.com

| Condition | Possible Cause | Correction |
|---|---|---|
| | (g) Damaged caliper piston seal. | (g) Install new piston seal. |
| | (h) Power brake malfunction. | (h) Check and correct power unit. |
| **BRAKE ROUGHNESS OR CHATTER (PEDAL PUMPING)** | (a) Excessive lateral runout of braking disc. | (a) Check disc for lateral runout with dial indicator. Install new disc. |
| | (b) Excessive thickness variation of braking disc. | (b) Check disc for runout with dial indicator. |
| | (c) Excessive front bearing clearance. | (c) Readjust wheel bearings to specified torque. |
| | (d) Rear brake drums out-of-round. | (d) Regrind rear drums and check for out-of-round. |
| **EXCESSIVE PEDAL EFFORT** | (a) Power brake malfunction. | (a) Check and correct power unit. |
| | (b) Brake fluid, oil or grease on linings. | (b) Install new shoe linings as required. |
| | (c) Incorrect lining. | (c) Remove lining and install correct lining. |
| | (d) Frozen or seized pistons. | (d) Disassemble caliper and free up pistons. |
| **PULL** | (a) Brake fluid, oil or grease on linings. | (a) Install new shoe and linings. |
| | (b) Caliper not in the proper alignment to the braking disc. | (b) Remove caliper and reinstall. Check alignment. |
| | (c) Frozen or seized pistons. | (c) Disassemble caliper and free up pistons. |
| | (d) Incorrect tire pressure. | (d) Inflate tires to recommended pressures. |
| | (e) Out-of-round rear drums. | (e) Regrind rear drums and check. |
| | (f) Distorted brake shoes. | (f) Install new brake shoes. |
| | (g) Front end out of alignment. | (g) Align front end and check. |
| | (h) Broken rear spring. | (h) Install new rear spring. |
| | (i) Rear brake pistons sticking. | (i) Free up rear brake pistons. |
| | (j) Rear brakes out of adjustment. | (j) Adjust rear brakes. |
| | (k) Restricted hose or line. | (k) Check hoses and lines and correct as necessary. |
| | (l) Unmatched linings. | (l) Install correct lining. |
| **NOISE** | | |
| | **Groan**—Brake noise emanating when slowly releasing brakes (creep—groan) | |
| | (a) Not detrimental to function of disc brakes—no corrective action required. (Indicate to operator this noise may be eliminated by slightly increasing or decreasing brake pedal efforts.) | |
| | **Rattle**—Brake noise or rattle emanating at low speeds on rough roads, (front wheels only). | |
| | (a) Excessive clearance between the shoe and the caliper. | (a) Install new shoe and lining assemblies. |
| | (b) Shoe anti-rattle spring missing or not properly positioned. | (b) Install new anti-rattle spring or position properly. |
| **SCRAPING** | (a) Mounting bolts too long. | (a) Install mounting bolts of correct length. |
| | (b) Loose wheel bearings. | (b) Readjust wheel bearings to correct specifications. |
| **FRONT BRAKES HEAT UP DURING DRIVING AND FAIL TO RELEASE** | (a) Power brake malfunction. | (a) Check and correct power unit. |
| | (b) Sticking pedal linkage. | (b) Free up sticking pedal linkage. |
| | (c) Operator riding brake pedal. | (c) Instruct owner how to drive with disc brakes. |
| | (d) Frozen or seized piston. | (d) Disassemble caliper and free up piston. |
| | (e) Residual pressure valve in master cylinder. | (e) Remove valve. (See Fig. 15). |
| **LEAKY WHEEL CYLINDER** | (a) Damaged or worn caliper piston seal. | (a) Disassemble caliper and install new seal. |

MyMopar.com

| Condition | Possible Cause | Correction |
|---|---|---|
| | (b) Scores or corrosion on surface of cylinder bore. | (b) Disassemble caliper and hone cylinder bore. Install new seal. |
| **GRABBING OR UNEVEN BRAKING ACTION** | (a) Power brake malfunction.<br>(b) Causes listed under "Pull." | (a) Check and correct power unit.<br>(b) Corrections listed under "Pull." |
| **BRAKE PEDAL CAN BE DEPRESSED WITHOUT BRAKING EFFECT** | (a) Pistons pushed back in cylinder bores during servicing of caliper (shoe and lining not properly positioned). | (a) Reposition the brake shoe and lining assemblies. Depress pedal a second time and if condition persists, check the following causes: |
| | (b) Leak in system or caliper. | (b) Check for leak and repair as required. |
| | (c) Damaged piston seal in one or more of the cylinders. | (c) Disassemble caliper and replace piston seals as required. |
| | (d) Air in hydraulic system or improper bleeding procedure. | (d) Bleed the system. |
| | (e) Bleeder screw open. | (e) Close bleeder screw and bleed the entire system. |
| | (f) Leak past primary cup in master cylinder. | (f) Recondition the master cylinder. |
| | (g) Leak in rear brake cylinder. | (g) Hone cylinder bore. Install new piston cylinder cups. |
| | (h) Rear brakes out of adjustment. | (h) Adjust rear brakes. |

## GENERAL INFORMATION

The front wheel disc brake shown in (Fig. 1) consists of a fixed caliper (inner and outer housing) two friction pads (brake lining) bonded to steel shoes, four pistons, piston return springs, piston seals, dust boots and retainers. The brake disc is made from high grade cast iron and has a series of air vent louvres to provide cooling for the brake assembly. The splash shield has a series of stamped vents so designed as to

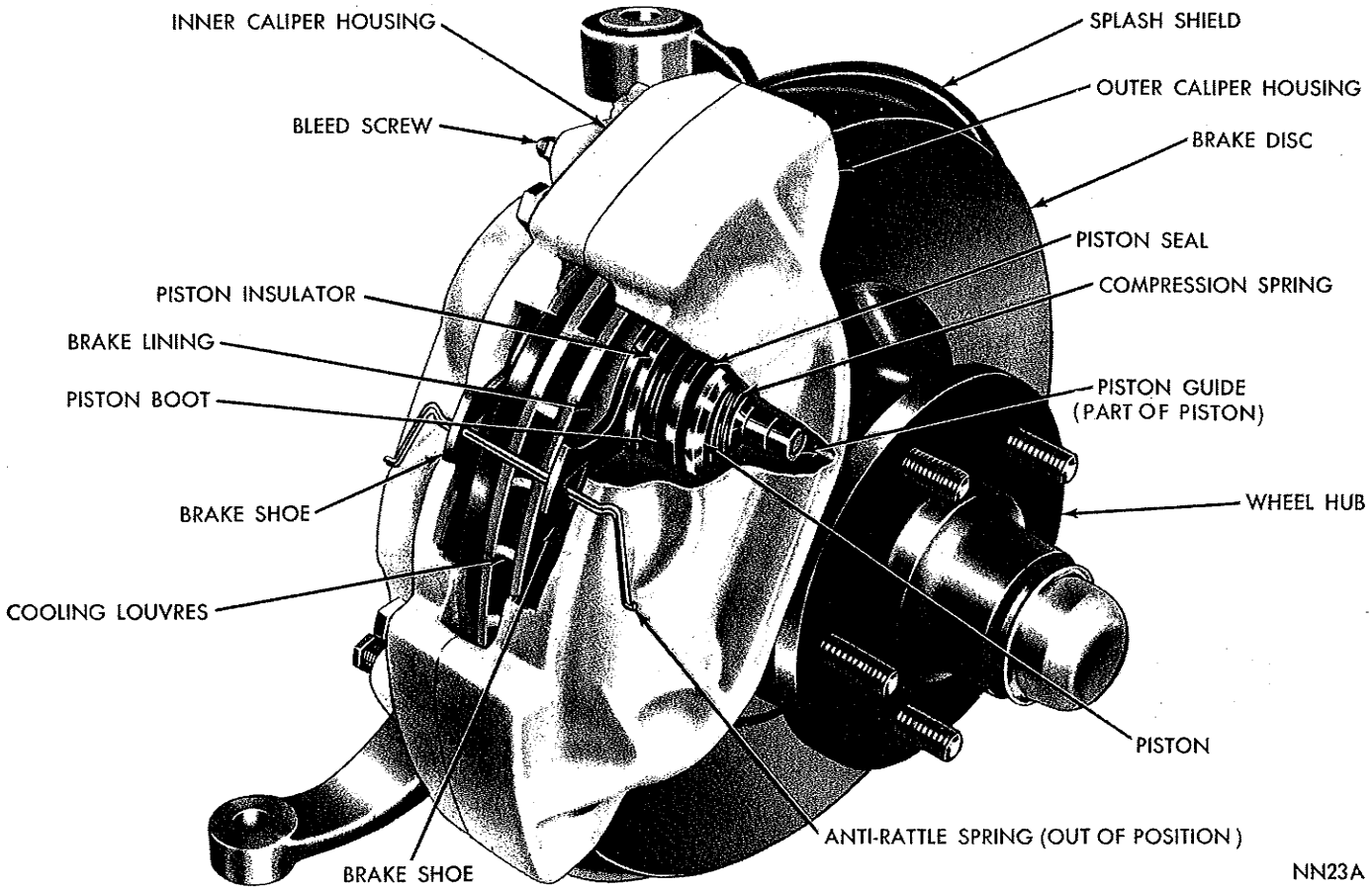


*Fig. 1—Disc Brake Assembly (Cut-Away View)*

MyMopar.com

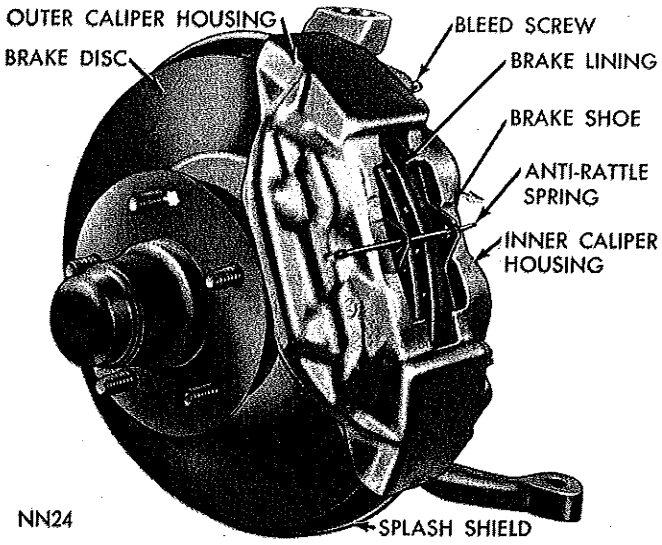


*Fig. 2—Disc Brake Assembly*

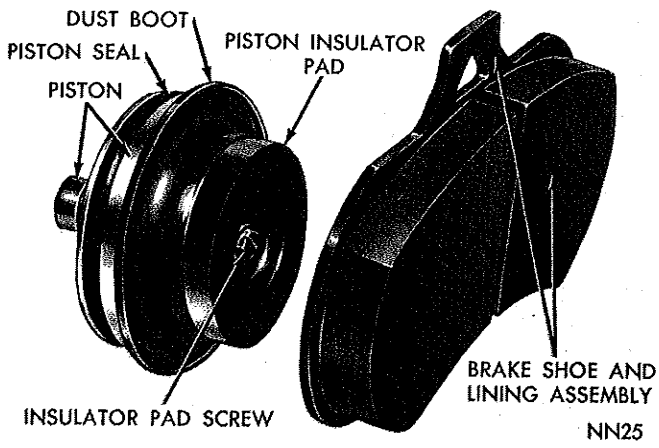


*Fig. 3—Disc Brake Piston, Shoe and Lining Assembly*

supply additional air for cooling.

The brake disc is mounted on the front wheel hub by five bolts and is straddled by the caliper which is attached to the steering knuckle and steering knuckle arm by two bolts. The caliper assembly is composed of two housings. In each housing, there are two cylinder bores each containing a piston, piston seal, piston return spring; protected by a dust boot and retainer. Attached to the outer end of the piston is a heat resistant pad which contacts the shoe and acts as a heat insulator. Inserted between the pistons and the disc is the segmented lining and shoe assembly which are held in position by the brake shoe anti-rattle spring (Fig. 2).

### Operation

As the brake pedal is depressed, the hydraulic pressure exerted in the system loads the pistons; clamping the disc between the brake shoe pads with equal and opposite force. When the brake pedal is released, the hydraulic pressure is reduced and the pistons relax. The compressed piston return spring positions the brake shoes lightly against the disc, ready for the next application.

The disc brake, having small friction segments, operates on a small area of the braking disc surface, leaving a large proportion of the disc exposed to the atmosphere which allows a maximum dissipation of heat. The disc brake provides consistent performance even on frequent stops from high speed (Fig. 3).

The disc brake automatically compensates for normal wear, since the brake shoe lining brushes lightly against the disc when the brakes are not in use. Thus no adjustments are required. However, periodical inspection should be made to insure that the lining does not wear too thin. The shoes and lining should be replaced when the groove is no longer visible on the lining pad, or .030 inch. The rate and type of wear will vary considerably with driving conditions.

The pistons in the caliper assembly are of large capacity and as the pistons move out to compensate for lining wear, the fluid level in the master cylinder falls. The fluid level in the master cylinder should be checked at regular intervals (Fig. 15).

The master cylinder is of the dual reservoir type to compensate for the greater volume of brake fluid used in the system (Fig. 15).

15 x 6K wheels are used on disc brake equipped vehicles.

## SERVICE PROCEDURES

## BRAKE SHOE REMOVAL

### Removing the Lining

To remove the disc brake shoe and lining assembly, refer to (Fig. 1) and proceed as follows:

(1) Raise car on hoist or jackstands.

(2) Remove wheel covers and wheel and tire assemblies.

(3) Remove brake shoe anti-rattle spring.

(4) Remove bolts that attach caliper assembly to steering knuckle and steering knuckle arm.

(5) Remove caliper from disc by slowly sliding caliper assembly up and away from braking disc.

(6) Carefully remove brake shoe and lining assembly, (one at a time through top opening).

(7) Insert piston compression Tool C-3992 between piston insulator pads and turn knob on tool until pistons are fully compressed (Fig. 4).

## CLEANING AND INSPECTION

Check for piston seal leaks (evident by fluid moisture around the cavity) and for any ruptures of the piston boot. Wipe the cavity clean (between the inner and outer caliper housings) with a shop towel. Check

MyMopar.com

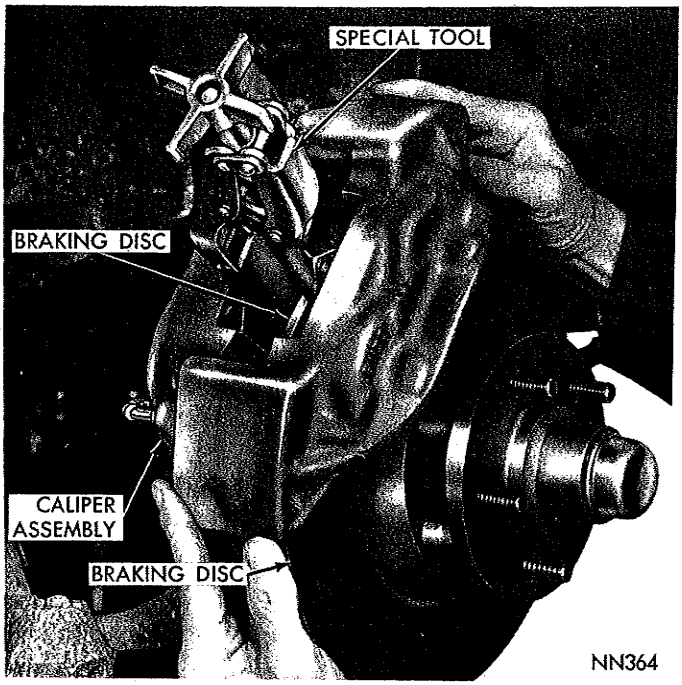


*Fig. 4—Piston Compression Tool Installed*

piston boot for proper seating in the piston groove and under the coiled retainer in the caliper groove (Fig. 12). If fluid moisture is evident, it will be necessary to disassemble the caliper assembly and install new piston seals and boots. (Refer to "Disassembling the Caliper" Paragraph.)

## BRAKE SHOE INSTALLATION

To install the disc brake shoe and lining assemblies refer to (Fig. 1) and proceed as follows:

(1) Slide disc brake shoe and lining assemblies into position in caliper assembly (one at a time).

(2) Position shoes, then install Tool C-3992 between shoes. Adjust tool so that it holds shoes apart but is not exerting a large force against lining surface so that tool will slip easily when contacted by the disc.

(3) Slide caliper assembly down into position over brake disc and align mounting holes. (As caliper is being lowered, disc will force tool out of caliper.)

(4) Install caliper mounting bolts and tighten from 70 to 80 foot-pounds.

(5) Install wheel and tire assemblies and wheel covers.

(6) Remove jackstands or lower hoist.

**CAUTION: Road test the vehicle and make several heavy 40 m.p.h. stops to wear off any foreign material on the brakes and to seat the units. The vehicle may pull to one side or the other if this is not done.**

## REMOVING THE CALIPER

Should it become necessary to remove the caliper for the installation of new parts, proceed as follows:

(1) Raise car on hoist or jackstands.

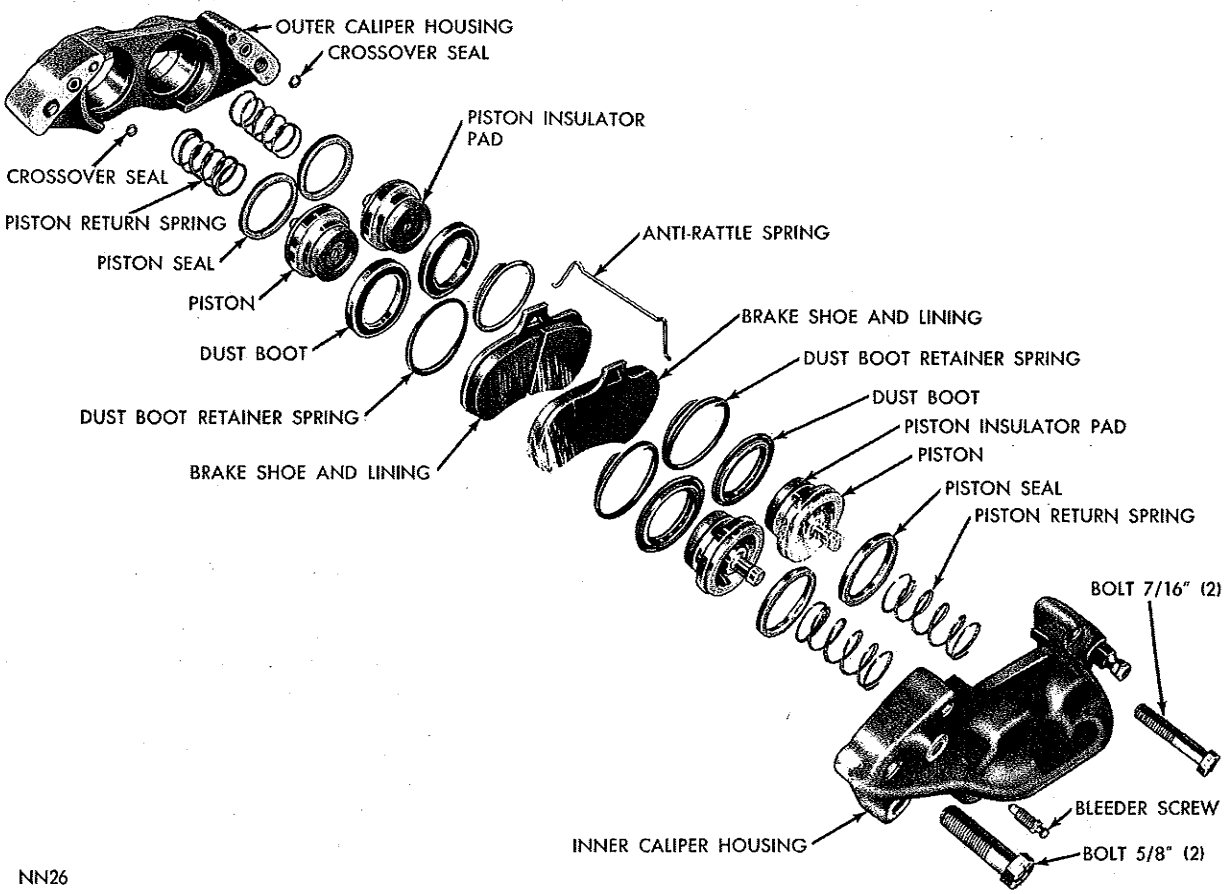


*Fig. 5—Disc Brake Caliper Assembly (Exploded View)*

MyMopar.com

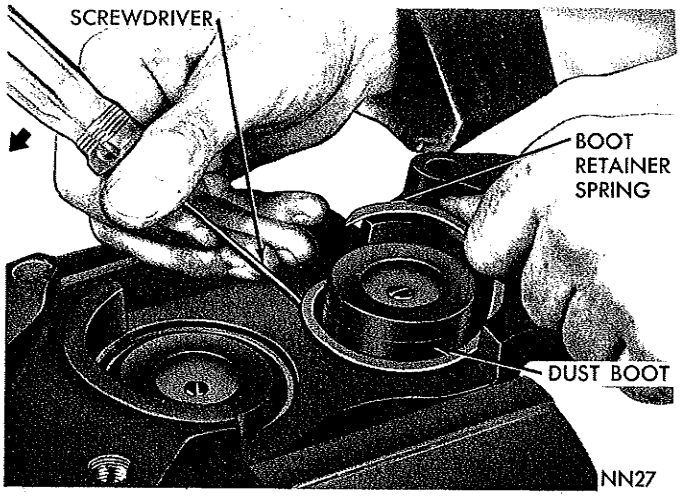


*Fig. 6—Removing the Piston Dust Boot Retainer Spring*

(2) Remove wheel covers, wheel and tire assemblies and anti-rattle springs. Disconnect brake line at caliper housing and install a 3/8-24 plug.

(3) Remove bolts that attach caliper assembly to steering knuckle and steering knuckle arm.

(4) Remove caliper from disc by slowly sliding caliper assembly up and away from braking disc.

(5) Remove lining pads. Insert piston compression Tool C-3992 between piston insulator pads and turn knob on tool until pistons are fully compressed (Fig. 4). Remove to bench for disassembly.

## DISASSEMBLING THE CALIPER

To disassemble the caliper, refer to (Fig. 5) then proceed as follows:

(1) Drain caliper, then place caliper assembly in a vise. Remove piston compression Tool C-3992 and four bolts that hold two halves of caliper together.

(2) Separate halves and remove two crossover seals.

(3) Using a small screwdriver, pry out exposed end of piston dust boot retainer spring and uncoil from its groove to release dust boot (Fig. 6).

(4) Using same screwdriver, carefully work dust boot out of groove (Fig. 7). Be sure and hold piston compressed during this operation.

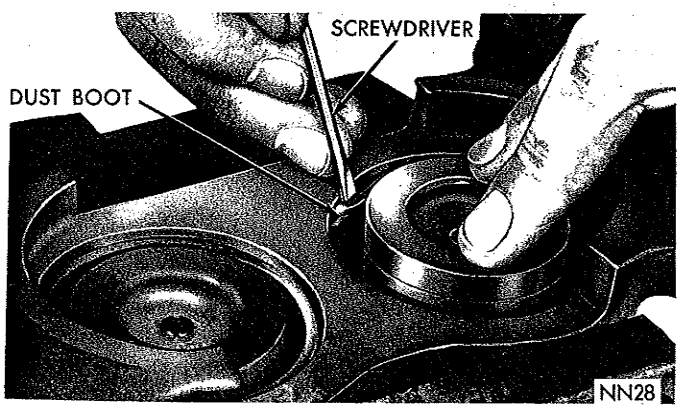


*Fig. 7—Removing the Piston Dust Boot*

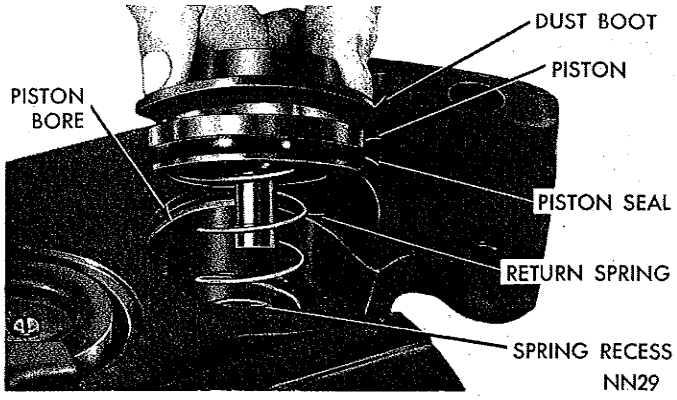


*Fig. 8—Removing or Installing Piston and Piston Return Spring*

(5) Remove piston, piston seal and dust boot from caliper (Fig. 8). Remove piston return spring.

(6) Remove piston dust boot by grasping edge and pulling out of its groove (Fig. 9).

(7) Using fingers, roll piston seal out of its groove in piston (Fig. 10). Discard seal.

(8) Remove remaining three pistons in same manner.

(9) Remove bleeder screw from inner caliper housing.

## CLEANING AND INSPECTION

Clean all parts in alcohol; wipe dry, using clean lint free shop towels. Using an air hose, blow out the drilled passages and bores. Check the dust boots for punctures or tears. If punctures or tears are evident, new boots should be installed at reassembly. Inspect the piston bores in both housings for scoring or pitting. Bores that show light scratches or corrosion, can usually be cleaned with crocus cloth. However, bores that have deep scratches or scoring may be honed, using Tool C-3993, providing the diameter of the bore is not increased more than .002 inch. If the bore does not clean up within this specification, a new caliper housing should be installed. (Black stains on the bore walls are caused by the piston seals and will do no harm.)

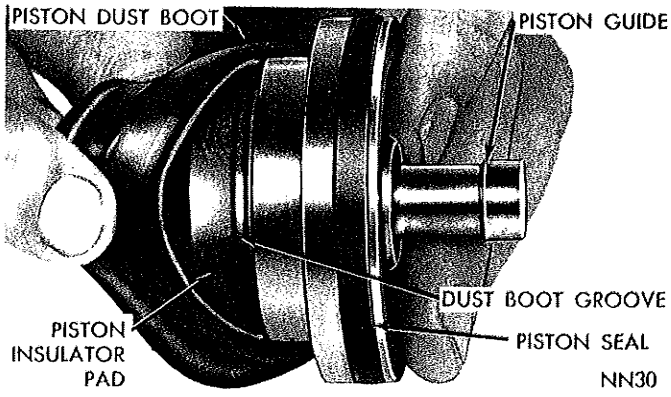


*Fig. 9—Removing the Piston Dust Boot*

MyMopar.com

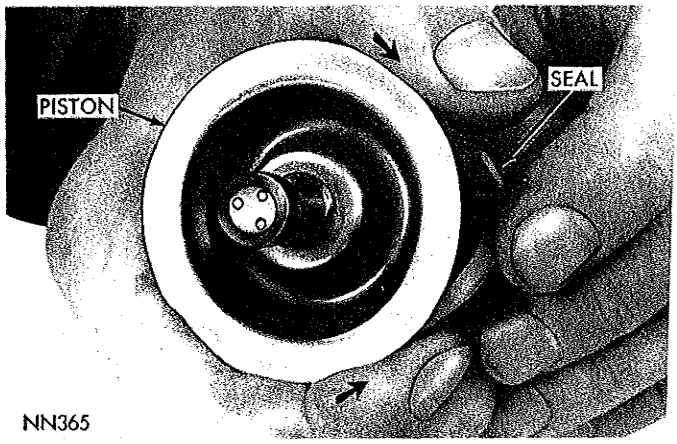


*Fig. 10—Removing the Piston Seal*

**When using hone C-3993 (Fig. 11) be sure and install the hone baffle before honing bore. The baffle is used to protect the hone stones from damage.**

**Use extreme care in cleaning the caliper after honing. Remove all dust and grit by flushing the caliper with alcohol; wipe dry with a clean lintless cloth and then clean a second time in the same manner.**

## ASSEMBLING THE CALIPER

To reassemble the disc brake caliper, refer to (Fig. 5), then proceed as follows:

(1) Clamp caliper housing in a vise, and coat cylinder bores with #55 Dow-Corning Pneumatic Silicone Grease (or equivalent) then install piston return spring. (Be sure spring is seated in recess at bottom of bore.) (Fig. 8.)

(2) Coat outside diameter and fill inner diameter of a new piston seal with #55 Dow-Corning Pneumatic Silicone Grease (or equivalent) and work over piston land and down into position in groove, using fingers only.

(3) Install dust boot on piston with lip of seat toward piston pad. (Refer to Fig. 3.)

(4) Install piston assembly over return spring and press down until piston bottoms in bore.

(5) Using a small blunt screwdriver, work lip of boot into groove, around diameter of bore (Fig. 7). **Use care so as not to puncture boot during this operation,**

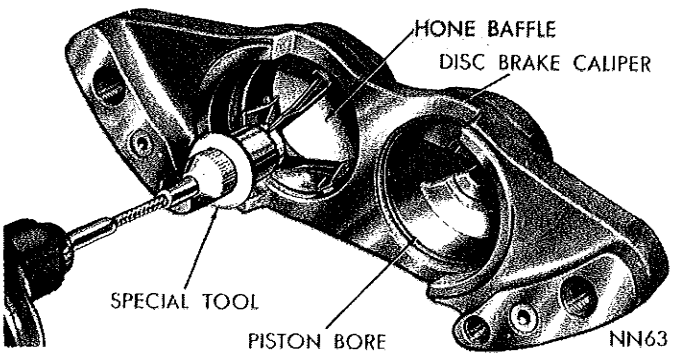


*Fig. 11—Honing Piston Bore*

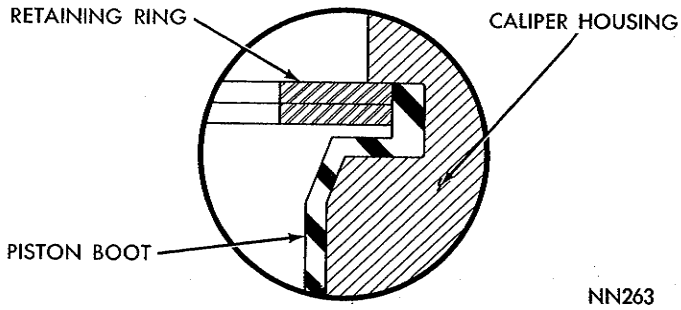


*Fig. 12—Correct Boot Installation (Section View)*

**or a new boot will have to be installed.**

(6) Install coil retainer spring by inserting one end in position over boot in groove and continue to install around diameter of bore until retainer is fully seated. **Be sure that boot is completely locked in position by retainer and that retainer is fully seated in groove over boot (Fig. 12).**

(7) Install remaining pistons in same manner, then test pistons for smooth operation in their bores by depressing with fingers.

(8) Lightly clamp outer caliper half in vise and install new crossover passage seals in position in recess of caliper mating surface.

(9) Place mating caliper half over one clamped in vise and install attaching bolts. Tighten to 55 foot-pounds (7/16 inch) and 150 foot-pounds (5/8 inch).

(10) Install brake shoes in caliper assembly and insert piston compression Tool C-3992 between lining pads. Turn knob on Tool until pistons are compressed. Adjust Tool so that it will slip easily when contacted by disc.

(11) Install bleeder screw and tighten lightly.

## INSTALLING THE CALIPER

Before installing the caliper assembly over the brake disc, check the disc for runout. Mount a dial indicator (Fig. 13) and check the lateral runout. Run-

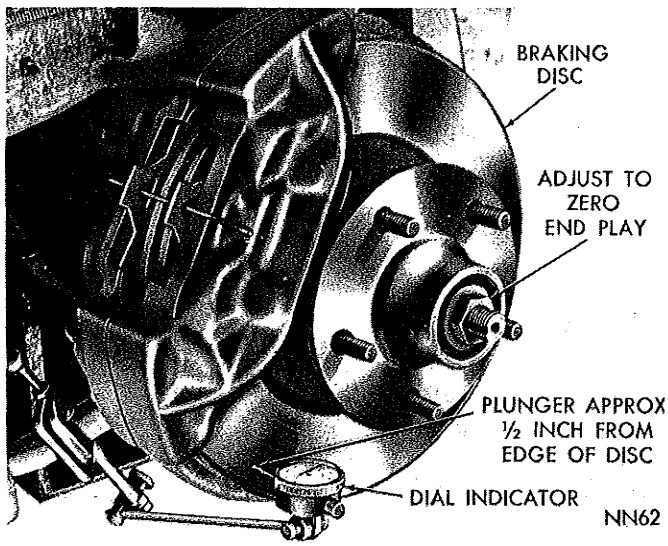


*Fig. 13—Checking Braking Disc for Runout*

MyMopar.com

out should not exceed .005 inch.

(1) Install caliper assembly over disc and align mounting holes. Install mounting bolts and tighten from 70 to 80 foot-pounds. (As caliper is being lowered into place, disc will force Tool out of caliper.)

(2) Reconnect brake line at caliper housing then follow normal bleeding procedure. (Be sure all air bubbles have escaped.) Replenish brake fluid in master cylinder.

(3) Install wheel and tire assembly and wheel covers.

(4) Remove jackstands or lower hoist.

**CAUTION: Road test the vehicle and make several heavy 40 MPH stops to wear off any foreign material on the brakes and to seat the units. The vehicle may pull to one side or the other if this is not done. This condition will be more noticeable if only one brake was serviced.**

## REMOVING THE BRAKING DISC AND HUB

Should it become necessary to remove the braking disc for installation of a wheel stud proceed as follows:

(1) Remove wheel cover and wheel and tire assembly.

(2) Remove caliper assembly as described under "Brake Shoe Removal."

(3) Remove grease cup, cotter pin, nut lock, nut, thrust washer and outer wheel bearing.

(4) Pull disc and hub off wheel spindle.

### *Removing The Braking Disc From The Hub*

Should it become necessary to remove or install a wheel stud because of damage, refer to (Fig. 14) then proceed as follows:

**Using a prick punch, mark both disc and hub so that balance will be assured at reassembly.**

(1) Clamp wheel hub in a vise with disc attaching bolts facing up.

(2) Remove the bolts and attach the disc to the hub.

(3) Lift disc from hub to remove.

(4) Remove damaged stud, using an arbor press.

(5) Install new stud in position and press into place.

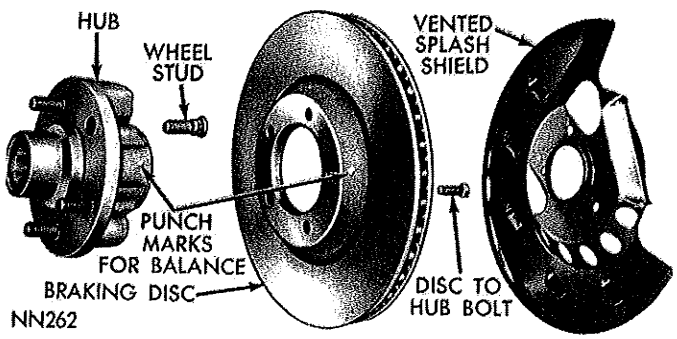


*Fig. 14—Braking Disc and Hub (Exploded View)*

### *Installing The Braking Disc On The Hub*

After stud has been installed, wipe hub and disc mating surfaces to remove any loose foreign material and mount disc on hub as follows:

(1) Place disc on hub in vise and align bolt holes and prick punch marks.

(2) Install attaching bolts and tighten from 55- to 60 foot-pounds.

### *Refacing The Braking Disc*

The surface of the disc should be smooth. The light scoring and grooving which appear after normal use are not detrimental to the operation of the brake. A heavily scored disc will impair efficiency and increase the lining pad wear, and should be replaced with a new disc and hub assembly. Do not attempt to reface the braking disc due to the close tolerance required. **This is important!**

## INSTALLING THE BRAKING DISC AND HUB

(1) Slide brake disc and hub assembly on spindle.

(2) Install outer bearing, thrust washer, and nut.

(3) Tighten wheel bearing adjusting nut to 90 inch-pounds while rotating hub and disc.

(4) Position lock nut on nut with one pair of slots in line with cotter pin hole.

(5) Back off the adjusting nut and lock assembly one slot then install cotter pin. The resulting adjustment should be zero (no preload) to .003 inch end play. (This is very important, when checking disc runout.)

(6) Install a dial indicator C-3339 (Fig. 13) and check runout of disc outer surface. The runout should not exceed .005 inch.

(7) Clean grease cap, coating inside with wheel grease (do not fill) and install cap.

(8) Install caliper assembly as described in "Brake Shoe Installation."

(9) Install wheel and tire assembly and wheel cover.

(10) Remove jackstands or lower hoist.

(11) Road test vehicle as described in "Installing the Caliper."

## REMOVING THE MASTER CYLINDER

Should it become necessary to remove the master cylinder for repair or overhaul, proceed as follows:

(1) Remove nuts that attach master cylinder to power brake unit.

(2) Disconnect brake tube at master cylinder outlet, then plug hole.

(3) Slide master cylinder straight out and away from power brake unit and remove from the vehicle.

## DISASSEMBLING THE MASTER CYLINDER

To disassemble the master cylinder, refer to (Figs. 15 and 16), then proceed as follows:

(1) Clean outside of master cylinder thoroughly.

MyMopar.com

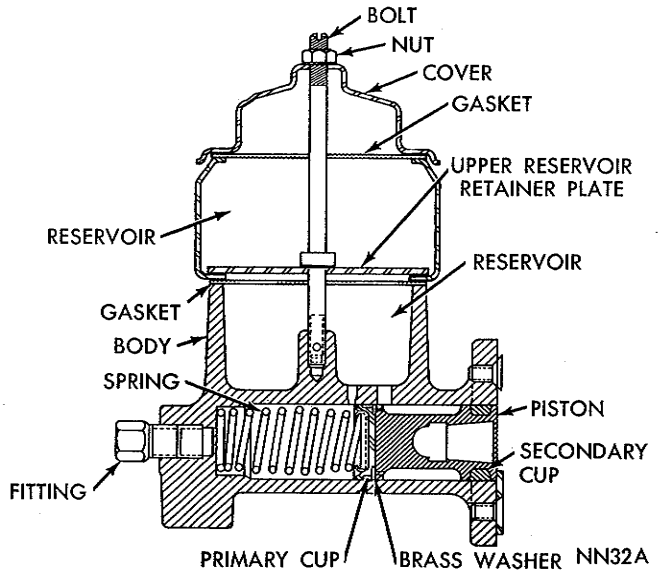


***Fig. 15—Disc Brake Master Cylinder (Sectional View)***

(2) Remove master cylinder cover retaining nut; remove cover and gasket, then drain brake fluid.

(3) Remove piston retainer attaching screw and remove piston assembly.

**It should be noted at this time, that check valve usually located in master cylinder bore is not used.** The residual check valve (Fig. 17) is located in the brake line, after brake line tee. There is no hydraulic pressure to disc brake caliper when brakes are not applied, because fluid source at master cylinder bypasses residual check valve.

(4) Remove brass washer between piston and cup. Remove primary cup and spring.

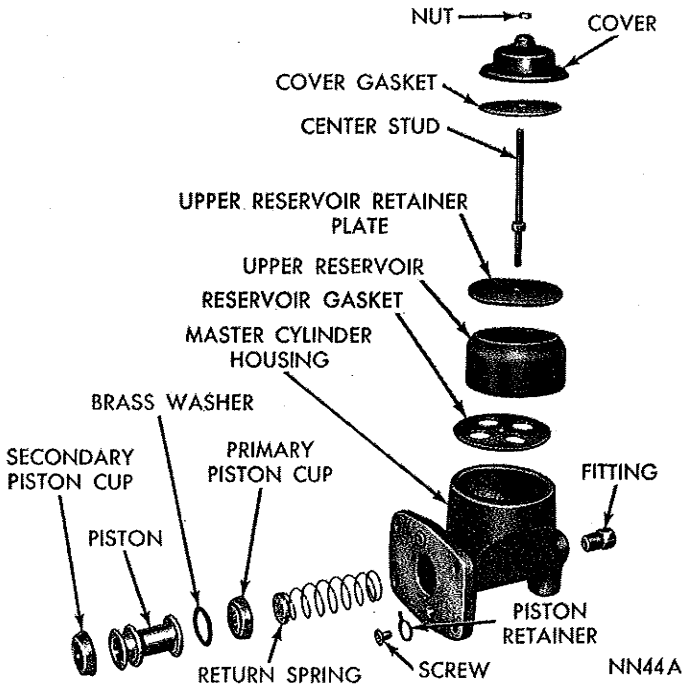


***Fig. 16—Master Cylinder (Exploded View)***

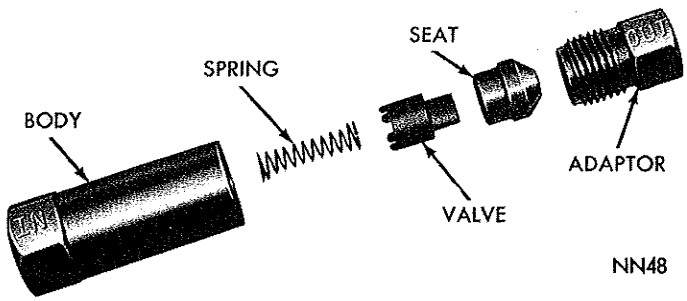


***Fig. 17—Residual Pressure Check Valve***

(5) Using a wrench, loosen and remove center stud and lift off upper reservoir and gasket. Remove plate from inside reservoir.

## CLEANING AND INSPECTION

Clean the master cylinder reservoir and main body, using a suitable solvent and blow dry with compressed air. Wash the master cylinder bore with clean brake fluid and inspect for scoring or pitting.

If the master cylinder piston is badly scored, or corroded, replace it with a new one. The primary and secondary cups should be replaced when reconditioning the master cylinder.

Master cylinder walls that have light scratches or show signs of corrosion, can usually be cleaned up with crocus cloth. However, cylinders that have deep scratches or scoring may be honed, providing the diameter of the cylinder bore is not increased more than .002 inch. A bore that does not clean up at .002 inch should be discarded and a new master cylinder installed. (Black stains on the cylinder wall are caused by the piston cups and will do no harm.) **Use extreme care in cleaning the master cylinder after reconditioning. Remove all dust or grit by flushing the cylinder bore with alcohol; wipe dry with a clean lintless cloth and clean a second time with alcohol. Dry the master cylinder bore with compressed air then flush with clean brake fluid. (Be sure the .028 inch diameter hole compensator port in the master cylinder bore is open.)**

## ASSEMBLING THE MASTER CYLINDER

Before assembling, the piston and cups should be dipped in clean brake fluid. To reassemble the master cylinder, refer to (Figs. 15 and 16) then proceed as follows:

(1) Install piston return spring in cylinder bore with closed end outward.

(2) Install primary cup in cylinder bore with open end of cup over closed end of return spring.

(3) Install secondary cup on master cylinder piston and install piston assembly in bore with flat brass washer between piston and primary cup.

(4) Install piston retainer and screw to retain piston assembly.

(5) Place reservoir gasket in position on lower res-

MyMopar.com

ervoir, then install retaining plate in upper reservoir.

(6) Place upper reservoir in position on reservoir gasket then install center stud. Tighten to 50 inch-pounds. (Be sure upper reservoir is centered on the lower casting.)

## INSTALLING THE MASTER CYLINDER

(1) Slide master cylinder over mounting studs on power brake unit, being sure brake push rod engages piston. Install attaching nuts and tighten to 200 inch-pounds.

(2) Attach brake line to master cylinder and tighten securely.

(3) Refill master cylinder reservoirs and bleed brakes as described previously.

(4) Install reservoir cover and gasket. Install attaching nut and tighten snugly.

### *Balancing the Front Wheels (Disc Brake Equipped Vehicles)*

To balance the front wheels on a disc brake equipped vehicle, the normal procedure for static balancing as described under "Wheel Balance" in the Wheels, Bearings and Tires Section of this manual should be followed. Dynamic balancing of the front wheels can be accomplished by the normal procedure when the wheels are removed from the vehicle, but the Manufacturer's recommendations should be followed closely when attempting to balance the wheels while on the vehicle.

# KELSEY-HAYES DISC BRAKES

## INDEX


| | Page |
|---|---|
| Assembling the Caliper | 49 |
| Assembling the Master Cylinder | 52 |
| Bleeding the Disc Brake | 53 |
| Brake Shoe Installation | 47 |
| Brake Shoe Removal | 47 |
| Cleaning and Inspection Caliper) | 49 |
| Cleaning and Inspection (Master Cylinder) | 52 |
| Disassembling the Caliper | 48 |
| Disassembling the Master Cylinder | 51 |
| Disc Brake Service Precautions | 44 |
| General Information | 41 |
| Installing the Braking Disc and Hub | 51 |
| Installing the Caliper | 50 |
| Installing the Master Cylinder | 52 |
| Removing the Braking Disc and Hub | 50 |
| Removing the Caliper | 48 |
| Removing the Master Cylinder | 51 |
| Routine Maintenance—30,000 Miles | 42 |
| Service Diagnosis | 45 |


## GENERAL INFORMATION

The disc brake (Fig. 1) is a fixed caliper, opposed piston, non-energized, ventilated type, actuated by the hydraulic system. There is no lateral movement of either the disc or the caliper. The caliper assembly consists of two caliper housings, bolted together. Each half contains two cylinder bores of 1-5/8 inch diameter. Each cylinder contains a seal, piston and externally attached molded rubber dust boot to seal the cylinder bore from contamination. The pistons are sealed by "rectangular section" rubber piston seals, positioned in grooves machined in the cylinder bores, which provide hydraulic sealing between the pistons (Fig. 2) and the cylinder bores.

The cylinders are connected hydraulically by means of internal passages in the caliper housings and by an external transfer tube between the two halves of the caliper assembly. A bleeder screw and a fluid inlet fitting are provided on each caliper assembly (Fig. 1).

The shoe and lining assemblies are located between parallel machined abutments within the caliper (Fig. 3) and are supported radially by "ears" on the outer ends of the shoe assemblies. The shoes slide axially in the abutments and ride on machined ledges (bridges) when hydraulic pressure is applied to the pistons. The lining assembly consists of organic friction material, bonded to a metal plate called the shoe, and is replaced as a unit. Brake torque is absorbed by the mating of the shoe end against the caliper abutments. A splash shield is attached to the top of the caliper and contains anti-rattle springs. This shield retains the shoes and helps to reduce contamination. The caliper is mounted directly to the front wheel spindle and at the rear of the wheel's vertical centerline (Fig. 4).

The cast iron braking disc is of the ventilated type and incorporates forty cooling fins. This increases the cooling area and permits circulation of air through the disc, resulting in more rapid cooling of the brake. The disc is attached to the wheel hub by five flathead serrated bolts. The outside diameter of the disc is 11.04 inches and the inside is 6.91 inches. A splash shield that is bolted to the spindle is used to prevent road contaminates from contacting the inboard side of the disc and lining surfaces (Fig. 4). The wheel, itself, provides protection for the outboard surface of the disc.

Braking action begins immediately upon application of the brake pedal as hydraulic pressure from the master cylinder to the system applies pressure to the co-axially aligned caliper pistons moving the linings against both sides of the braking disc, thus applying the brakes. During brake application, the piston seals are deflected by the hydraulic pressure (Fig. 5). When the pressure is released, the seals relax or retract,

MyMopar.com

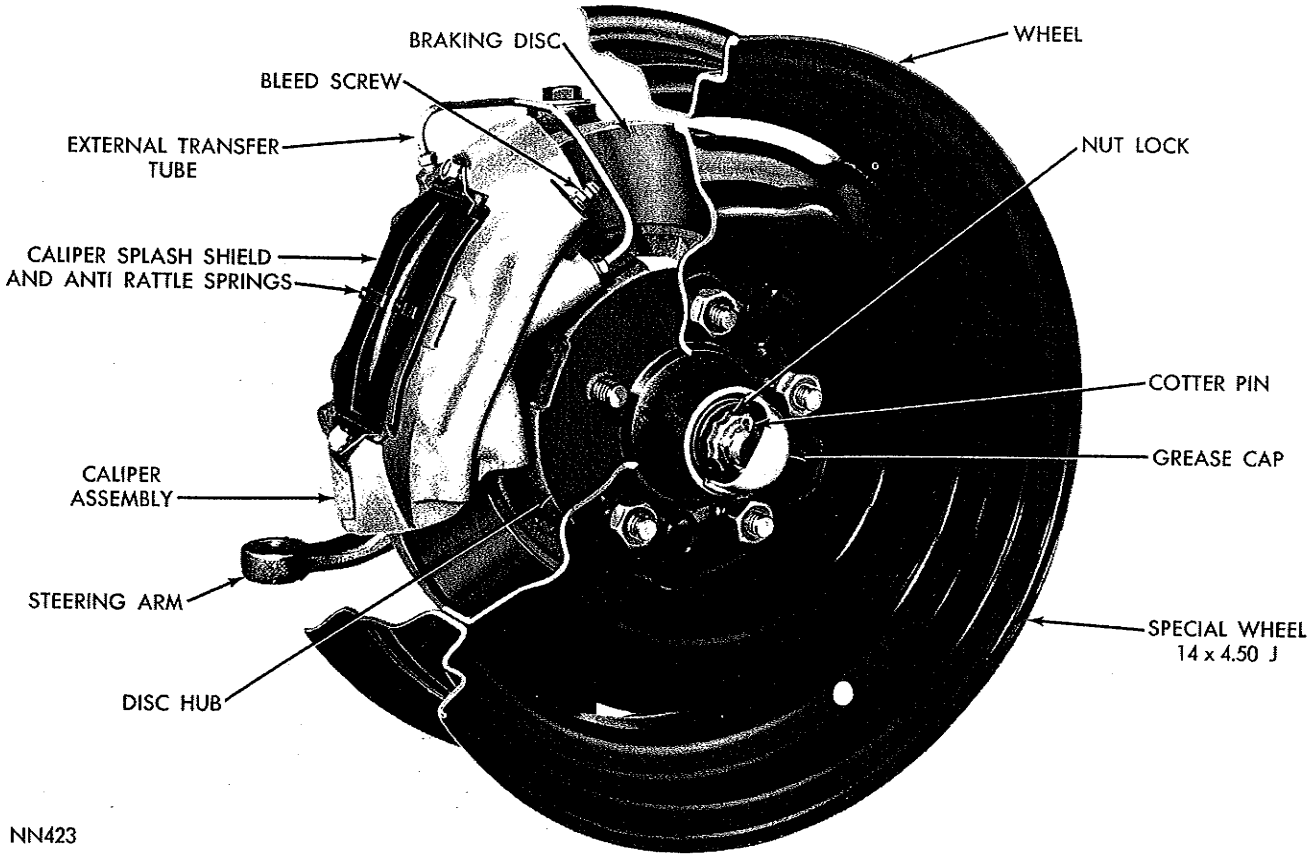


***Fig. 1—Disc Brake Assembly—Right Front (Sectional View)***

pulling the pistons back from the shoe and lining assemblies approximately .005". (This reaction is called "seal retraction" and provides the required running clearance as the linings relieve their force on the disc.) Inherent disc runout also contributes to maintaining running clearance. Automatic adjustment is achieved by the pistons sliding outward from the cylinder bore as the lining wears. The piston assumes a new position relative to the seal and maintains the correct adjustment location at all times (Fig. 5).

There is no hydraulic pressure to the calipers when the brakes are not applied because the fluid source at the master cylinder by-passes the residual check valve (Fig. 6).

The hydraulic system contains a proportioning valve (Fig. 7) between the master cylinder and the rear brake wheel cylinders which provides balanced braking action between the front and rear brakes under a wide range of braking conditions. The valve regulates the hydraulic pressure applied to the rear wheel cylinders, thus limiting rear braking action when high pressures are required at the front brakes. In this manner, premature rear wheel skid is prevented.

An additional feature of this disc brake system is a "tell-tale" tab sounding device which indicates when replacement of the shoe and lining assemblies are required (Fig. 3). The tabs located on the shoes create an audible metallic scraping noise from the brake by metal to metal contact on the braking disc. This warns the driver that the lining has worn to a minimum thickness and the vehicle should be returned to the dealer for relining of the brakes. This device is not detrimental to the function of the braking disc.

## ROUTINE MAINTENANCE—30,000 MILES

### *Check Brake Lines and Linings*

Raise all four wheels. Remove one of the front wheel and tire assemblies and inspect the braking disc, caliper and linings. (The wheel bearings should be inspected at this time and repacked if necessary.) **The caliper must be removed to inspect and pack the inner wheel bearing.**

**Do not get oil or grease on the disc or the linings.** If the linings are worn to within .030 inch of the surface of the shoe, replace both sets of shoe and lining assemblies (inboard and outboard) on the front wheels. It is recommended that both front wheel sets be replaced whenever a respective shoe and lining is worn or damaged.

If the caliper is cracked or fluid leakage through the casting is evident, it must be replaced as a unit.

### *Shoe and Lining Wear*

If a visual inspection does not adequately deter-

MyMopar.com

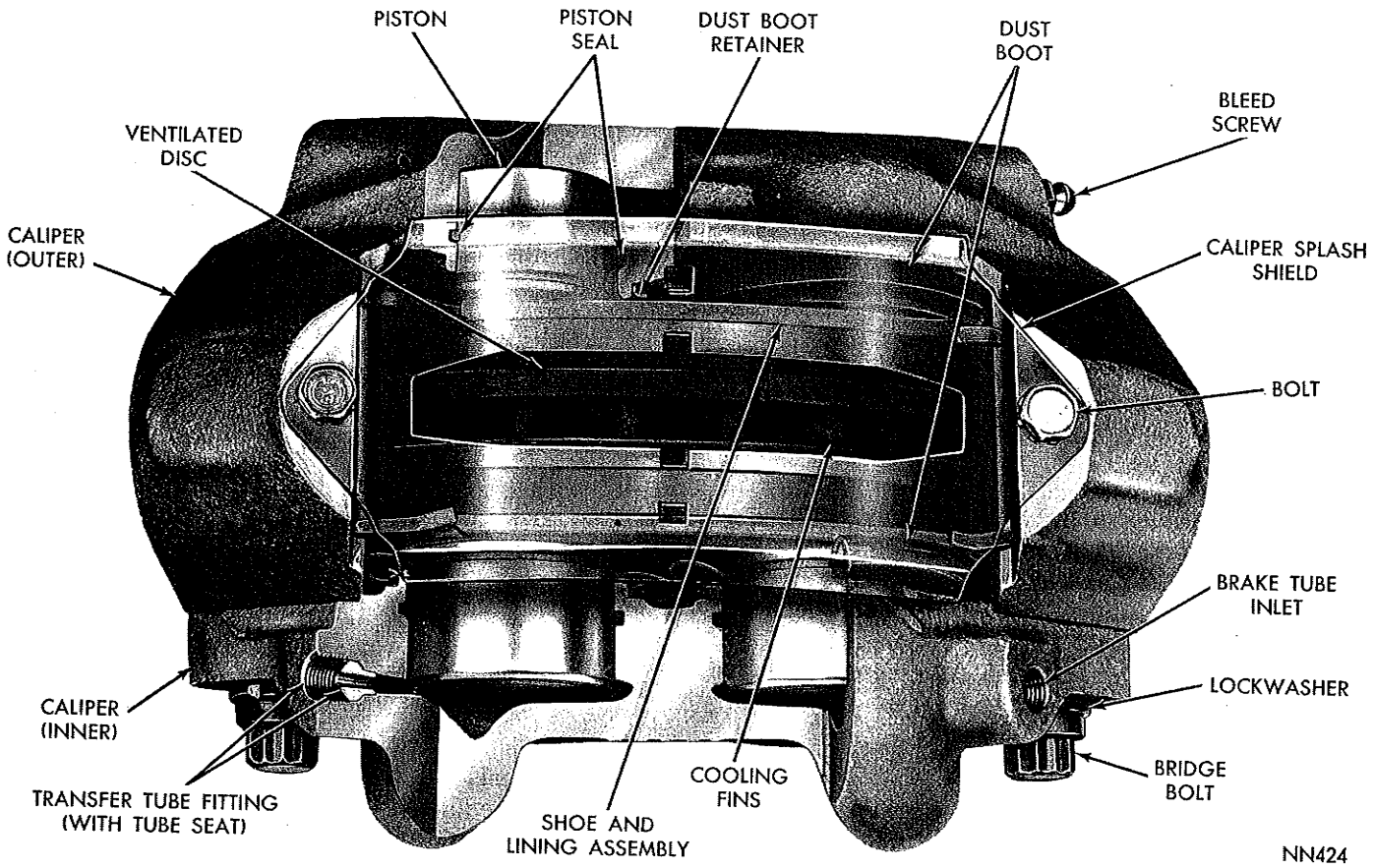


***Fig. 2—Disc Brake Caliper Assembly (Sectional View)***

mine the condition of the lining, a physical check will be necessary.

To check the amount of lining wear, remove the wheel and tire assembly, the caliper splash shield, and the shoe and lining assemblies (see "Brake Shoe Removal" paragraph). Three (3) thickness measurements with a micrometer should be taken across the middle section of the shoe and lining; one reading at each side and one reading in the center. When an assembly has worn to a thickness of .180 inch, it should be replaced. If shoes do not require replacement, reinstall making sure to replace to their original inner and outer positions (see "Brake Shoe Installation" paragraph).

When shoe and lining replacement is required, a "scraping" noise from the front brakes will be heard. This noise is metal-to-metal contact between the tabs on the shoe assemblies and the braking disc. When the noise becomes audible to the driver, the lining has worn to the metal tabs and the brakes must be relined. The contact between the metal tab and disc will not effect the function of the disc brake system, but continued use until lining is completely worn away

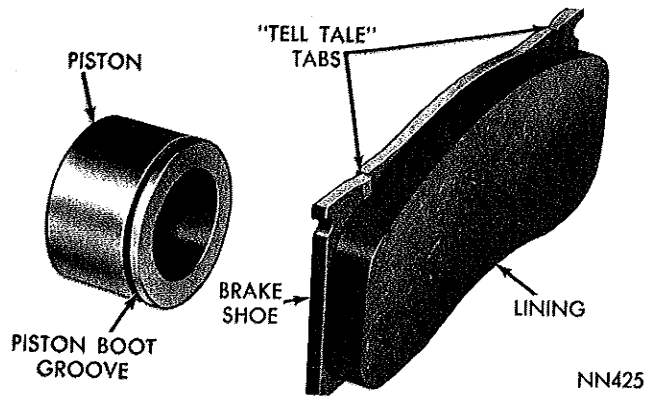


***Fig. 3—Disc Brake Piston, Shoe and Lining Assembly***

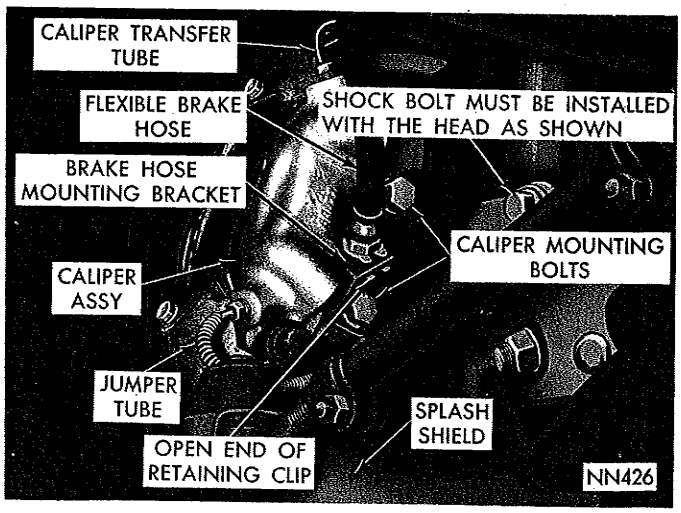


***Fig. 4—Disc Brake Caliper Mounting***

MyMopar.com

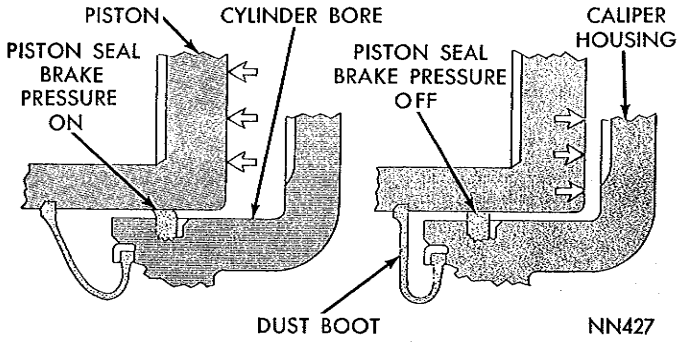


*Fig. 5—Piston Seal Function for Automatic Adjustment*

will cause disc damage.

### Running Clearance

To check the shoe and lining assembly to the braking disc clearance, remove the wheel and tire assembly and the caliper splash shield. Insert a feeler gauge between the lining and the braking disc. Ordinarily, the clearance should be .003 to .006 inch. However, if the vehicle was stopped by a brake application just prior to checking the clearance, it is considered normal for the brakes to drag slightly.

### Braking Disc Runout

Excessive lateral runout of the braking disc will cause a "knocking back" of the pistons, which will create increased pedal travel and vibration when the brakes are applied.

Before checking the runout, the wheel bearing end play should be eliminated by tightening the adjusting nut. **The readjustment is very important and will be required at the completion of the test to prevent bearing failure.** After tightening the adjusting nut, be sure that the braking disc can still be rotated.

Dial indicator C-3339 should be clamped to the steering knuckle so that the stylus contacts the braking disc at a point approximately one (1) inch from the outer edge (Fig. 17). Rotate the disc and check the indicator reading. The maximum total indicator reading on the gauge should not exceed .0025 inch. If the reading exceeds this specification, the disc should be replaced. **Do not attempt to refinish a disc that indicates runout in excess of the specification.**

## DISC BRAKE SERVICE PRECAUTION

(1) Grease or any other foreign material must be kept off the caliper assembly, surfaces of the braking disc and external surface of the hub, during service procedures. Handling the braking disc and caliper should be done in a way to avoid deformation of the braking disc and nicking or scratching the brake linings.

(2) If inspection reveals the square sectioned rubber piston seals are worn or damaged, they should be replaced immediately.

(3) During removal and installation of a wheel and tire assembly, exercise care so as not to interfere with or damage the caliper splash shield, the bleeder screw or the transfer tube.

(4) The front wheel bearing end play is important

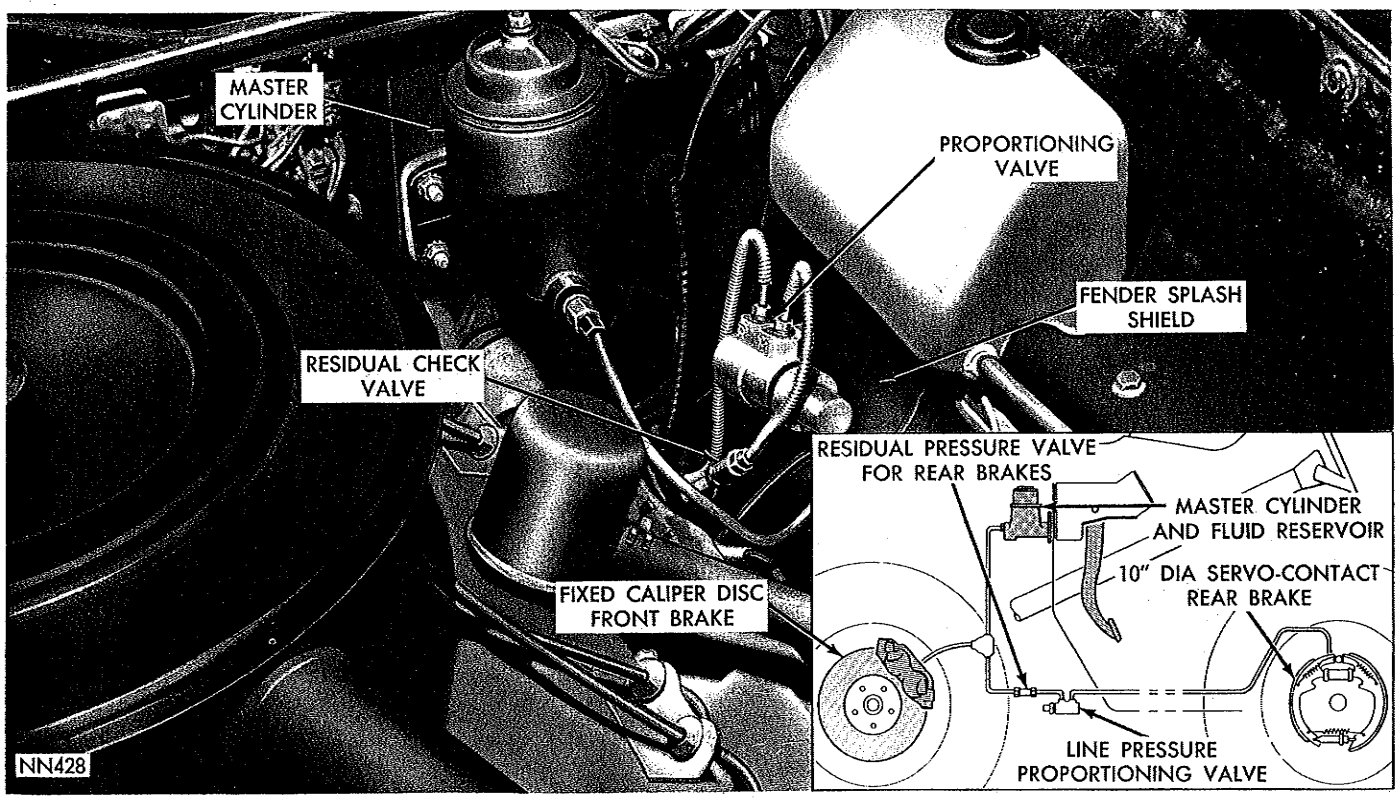


*Fig. 6—Proportioning and Residual Check Valve Mounting*

MyMopar.com

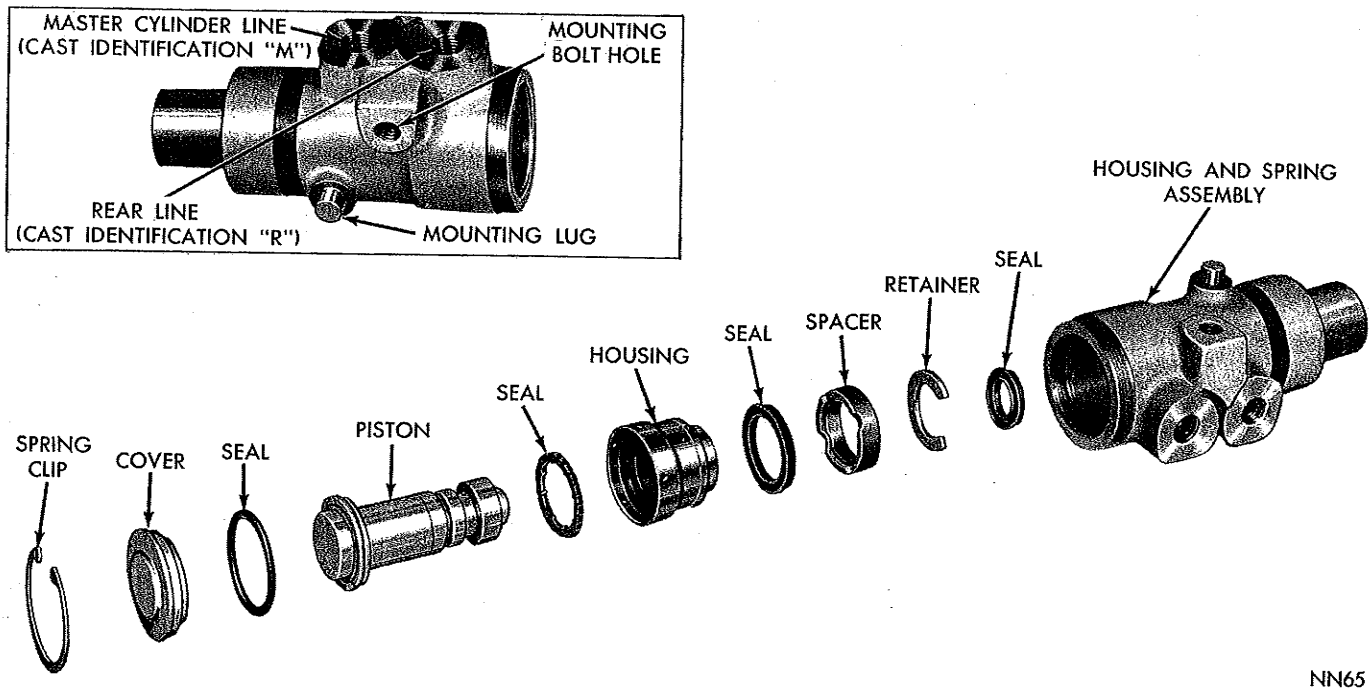


***Fig. 7—Proportioning Valve (Exploded View)***

and must be within specifications.

(5) Be sure the vehicle is centered on the hoist before servicing any of the front end components to avoid bending or damaging the disc splash shield on full right or left wheel turns.

(6) Before the vehicle is moved after any brake service work, **be sure and obtain a firm brake pedal.**

(7) The assembly bolts of the two caliper housings should not be disturbed, unless the servicing of the caliper assembly is required.

(8) **Riding the brake pedal** (common left foot application) should be avoided during vehicle operation.

(9) The wheel, tire, hub and disc assembly **cannot** be removed as an assembly. The caliper assembly must be removed before the removal of the hub and disc assembly.

## SERVICE DIAGNOSIS

| Condition | Possible Cause | Correction |
|---|---|---|
| **EXCESSIVE PEDAL TRAVEL** | (a) Excessive disc runout. | (a) Check disc for runout with dial indicator. Install new disc. |
| | (b) Air, leak, or insufficient fluid in system or caliper. | (b) Check system for leaks. |
| | (c) Improper brake fluid (boil). | (c) Drain and install correct fluid. |
| | (d) Rear brake adjustment required. | (d) Check and adjust rear brakes. |
| | (e) Warped or excessively tapered shoe and lining assembly. | (e) Install new shoe and linings. |
| | (f) Loose wheel bearing adjustment. | (f) Readjust wheel bearings to specified torque. |
| | (g) Damaged caliper piston seal. | (g) Install new piston seal. |
| | (h) Power brake malfunction. | (h) Check and correct power unit. |
| **BRAKE ROUGHNESS OR CHATTER (PEDAL PULSATING)** | (a) Excessive lateral runout of braking disc. | (a) Check disc for lateral runout with dial indicator. Install new disc. |
| | (b) Excessive out-of-parallelism of braking disc. | (b) Check disc for runout with dial indicator. Install new disc. |
| | (c) Excessive front bearing clearance. | (c) Readjust wheel bearings to specified torque. |
| | (d) Rear brake drums out-of-round. | (d) Check drums for out-of-round and regrind if necessary. |
| | (e) Rear brake drums distorted by improper tightening of nuts. | (e) Loosen and retorque wheel nuts to specifications. |

MyMopar.com

| Condition | Possible Cause | Correction |
|---|---|---|
| **EXCESSIVE PEDAL EFFORT** | (a) Power brake malfunction. | (a) Check and correct power unit. |
| | (b) Brake fluid, oil or grease on linings. | (b) Install new shoe linings as required. |
| | (c) Shoe and lining worn below .155" (lining only—.030"). | (c) Install new shoe and linings. |
| | (d) Incorrect lining. | (d) Remove lining and install correct lining. |
| | (e) Frozen or seized pistons. | (e) Disassemble caliper and free up pistons. |
| **PULL** | (a) Brake fluid, oil or grease on linings. | (a) Install new shoe and linings. |
| | (b) Frozen or seized pistons. | (b) Disassemble caliper and free up pistons. |
| | (c) Incorrect tire pressure. | (c) Inflate tires to recommended pressures. |
| | (d) Out-of-round rear drums. | (d) Check and regrind drums if necessary. |
| | (e) Distorted brake shoes. | (e) Install new brake shoes. |
| | (f) Front end out of alignment. | (f) Check and align front end. |
| | (g) Broken rear spring. | (g) Install new rear spring. |
| | (h) Rear brake pistons sticking. | (h) Free up rear brake pistons. |
| | (i) Rear brakes out or adjustment. | (i) Adjust rear brakes. |
| | (j) Restricted hose or line. | (j) Check hoses and lines and correct as necessary. |
| | (k) Unmatched linings. | (k) Install correct lining. |
| **NOISE** | | |
| **Groan**—Brake noise emanating when slowly releasing brakes (creep—groan) | | |
| | (a) Not detrimental to function of disc brakes—no corrective action required. (Indicate to operator this noise may be eliminated by slightly increasing or decreasing brake pedal efforts.) | |
| **Rattle**—Brake noise or rattle emanating at low speeds on rough roads, (front wheels only) | | |
| | (a) Excessive clearance between the shoe and the caliper. | (a) Install new shoe and lining assemblies. |
| **Scraping**— | (a) Mounting bolts too long. | (a) Install mounting bolts of correct length. |
| | (b) Braking disc rubbing housing. | (b) Check for rust or mud buildup on caliper housing adjacent to disc. Check caliper mounting and bridge bolt tightness. |
| | (c) Loose wheel bearings. | (c) Readjust wheel bearings to correct specifications. |
| **FRONT BRAKES HEAT UP DURING DRIVING AND FAIL TO RELEASE** | (a) Power brake malfunction. | (a) Check and correct power unit. |
| | (b) Sticking pedal linkage. | (b) Free up sticking pedal linkage. |
| | (c) Operator riding brake pedal. | (c) Instruct owner how to drive with disc brakes. |
| | (d) Frozen or seized piston. | (d) Disassemble caliper, hone cylinder bore, clean seal groove and install new pistons, seals and boots. |
| | (e) Residual pressure valve in master cylinder. | (e) Remove valve from cylinder. |
| **LEAKY WHEEL CYLINDER** | (a) Damaged or worn caliper piston seal. | (a) Disassemble caliper and install new seal. |
| | (b) Scores or corrosion on surface of piston. | (b) Disassemble caliper and hone cylinder bore. If necessary, install new pistons. |
| **GRABBING OR UNEVEN BRAKING ACTION** | (a) Power brake malfunction. | (a) Check and correct power unit. |
| | (b) Causes listed under "Pull." | (b) Corrections listed under "Pull." |
| **BRAKE PEDAL CAN DEPRESSED WITHOUT BRAKING EFFECT** | (a) Pistons pushed back in cylinder bores during servicing of caliper (shoe and lining not properly positioned). | (a) Reposition the brake shoe and lining assemblies. Depress pedal a second time and if condition persists, check |

MyMopar.com

| Condition | Possible Cause | Correction |
|---|---|---|
| | | the following causes: |
| | (b) Leak in system or caliper. | (b) Check for leak and repair as required. |
| | (c) Damaged piston seal in one or more of the cylinders. | (c) Disassemble caliper and replace piston seals as required. |
| | (d) Air in hydraulic system or improper bleeding procedure. | (d) Bleed the system. |
| | (e) Bleeder screw open. | (e) Close bleeder screw and bleed the entire system. |
| | (f) Leak past primary cup in master cylinder. | (f) Recondition the master cylinder. |
| | (g) Leak in rear brake cylinder. | (g) Hone cylinder bore. Install new piston cylinder cups. |
| | (h) Rear brakes out of adjustment. | (h) Adjust rear brakes. |

## SERVICE PROCEDURES

### BRAKE SHOE REMOVAL

To remove the disc brake shoe and lining assembly, refer to (Fig. 1), then proceed as follows:

(1) Raise vehicle on a hoist or jackstands.

(2) Remove wheel covers, and wheel and tire assembly.

(3) Remove bolts retaining caliper splash shield, then remove shield and anti-rattle spring assembly.

(4) Using two pair of pliers, grasp tabs on outer ends of shoes, remove shoe and lining by pulling outward (Fig. 8). Due to a ridge of rust that may build up on the rotor surface outside of lining contact area, it may be necessary to force piston back slightly into bores. Pistons can be forced back into bores by forcing shoe back with a water pump pliers placed on corner of the shoe and caliper housing (Fig. 8).

### CLEANING AND INSPECTION

Check the caliper seal for leaks (evident by fluid moisture around the cavity) and for any damage to the piston dust boot. Wipe the cavity clean (between the inner and outer caliper housings) with a shop towel. Check the piston dust boot for proper seating in the piston bore and the caliper housing. If excessive fluid moisture is evident, it will be necessary to install a new piston seal and piston dust boot. (Refer to "Disassembling the Caliper" paragraph.)

### BRAKE SHOE INSTALLATION

(1) Push all pistons back into their bores until bottomed to allow for installation of new thick shoes. This can be done by placing a flat sided metal bar or tool against piston and exerting a steady force until bottomed.

(2) Slide new shoe and lining into caliper with ears of shoe resting on bridges of caliper (Fig. 9). (Be sure shoe is fully seated and lining is facing disc.)

(3) Slide remaining shoe and lining into caliper, using same procedure as described above.

(4) Place caliper splash shield and anti-rattle spring assembly in position on caliper and install attaching bolts. Tighten securely.

(5) Pump brake pedal several times until a firm pedal has been obtained and shoe and lining have been properly seated.

(6) Install wheel and tire. Tighten wheel stud nuts to 55 foot pounds. Install wheel cover.

(7) Check and refill master cylinder reservoir with brake fluid as required.

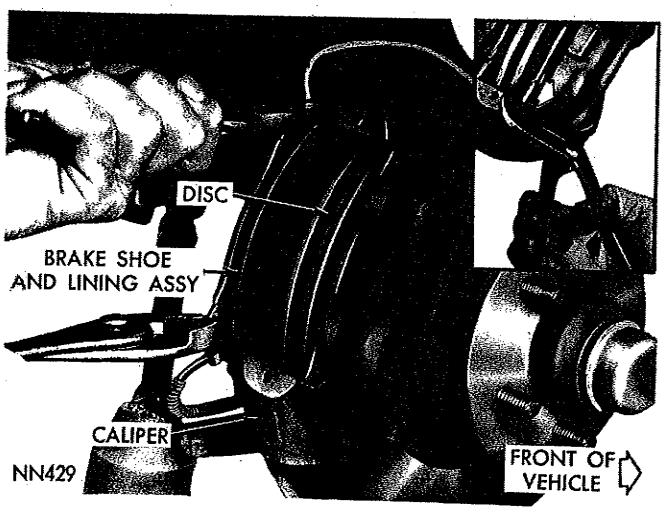


*Fig. 8—Removing the Brake Shoe and Lining*

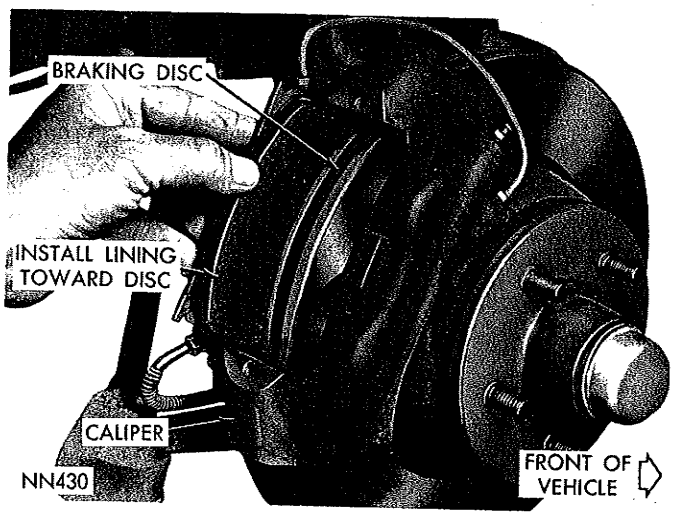


*Fig. 9—Installing the Brake Shoes and Lining*

MyMopar.com

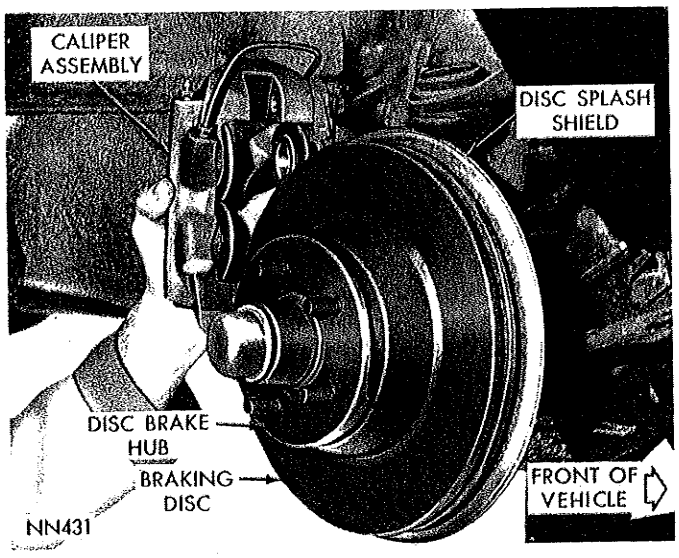


*Fig. 10—Removing or Installing the Disc Brake Caliper*

**CAUTION: Road test the vehicle and make several heavy 40 m.p.h. stops to wear off any foreign material on the brakes and to seat the units. The vehicle may pull to one side or the other if this is not done. (It should not be necessary to bleed the system after shoe and lining removal and installation.)**

## REMOVING THE CALIPER

Should it become necessary to remove the caliper for installation of a new piston seal or boot, refer to (Fig. 4), then proceed as follows:

(1) Raise the car on hoist or jackstands.

(2) Remove wheel cover and wheel and tire assembly.

(3) Disconnect front brake flexible hose from brake tube at frame mounting bracket. (Plug brake tube to prevent loss of fluid.)

(4) Remove bolts that attach caliper assembly to steering knuckle. Should it become necessary to install a new flexible brake hose on a disc brake equipped vehicle, scribe a mark on hose bracket on side where hose enters, and position of hose retaining clip underneath. (Fig. 4.) **Be sure at reassembly, that open end of retaining clip is facing out and away from caliper.**

(5) Slowly slide caliper assembly up and away from brake disc (Fig. 10) and remove to bench for disassembly.

## DISASSEMBLING THE CALIPER

To disassemble the caliper for the installation of new parts refer to (Fig. 11), then proceed as follows:

(1) Remove caliper splash shield attaching bolts, then remove splash shield and anti-rattle spring assembly. Remove jumper tube (armored) at caliper.

(2) Mount caliper assembly in a vise equipped with protector jaws. (Use caliper mounting lugs.) Remove transfer tube.

(3) Remove shoe and lining assemblies.

(4) Remove bridge bolts that hold two halves of the caliper together. **(Make sure at reassembly that these two bolts are used and tightened to correct torque.)**

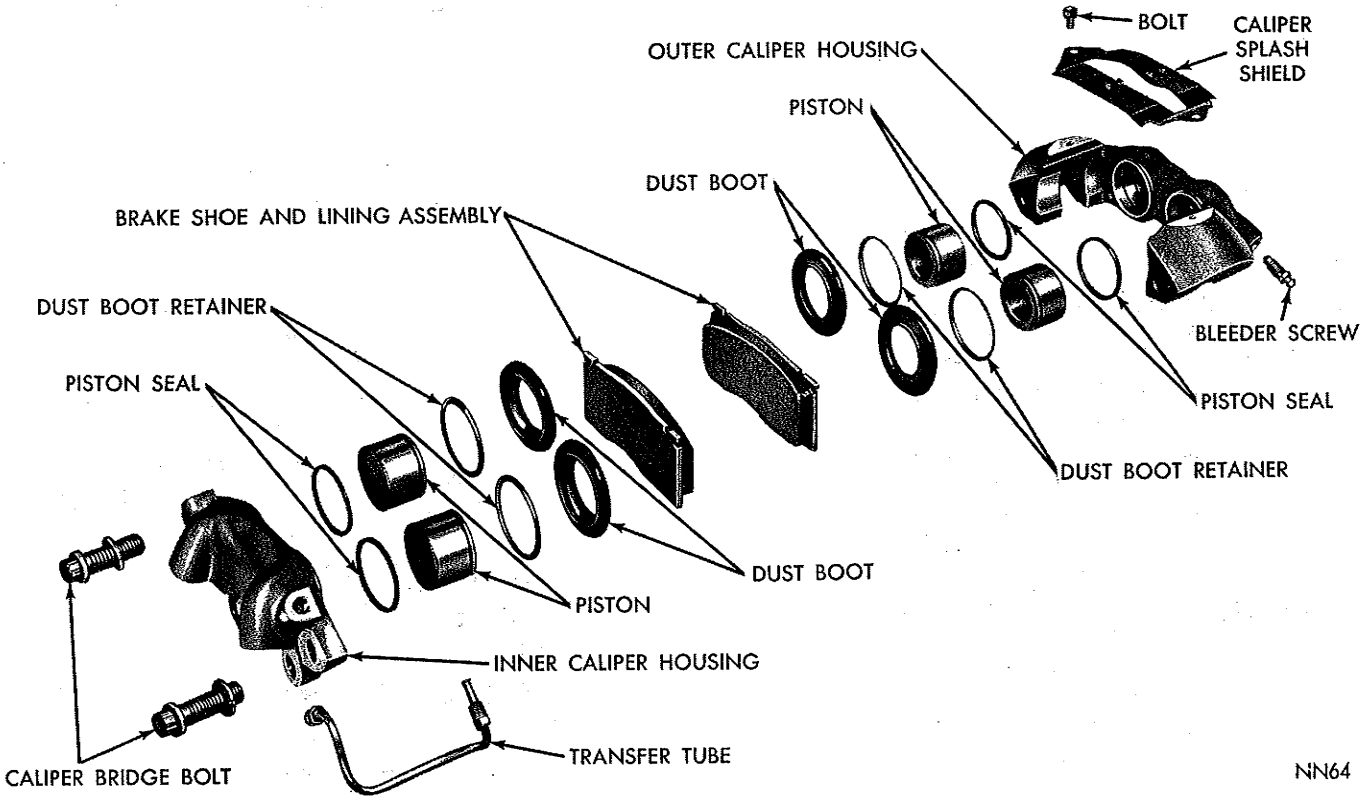


*Fig. 11—Caliper Assembly (Exploded View)*

MyMopar.com

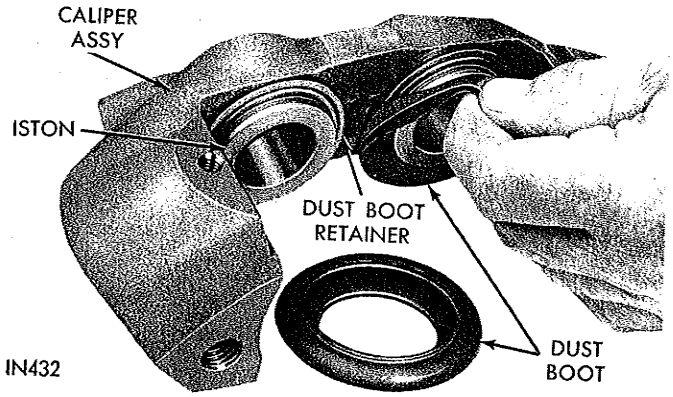


*Fig. 12—Removing Dust Boot from Piston and Caliper*

Separate assemblies.

(5) Peel dust boot out and away from caliper housing retainer and out of piston groove (Fig. 12). Remove remaining dust boots in same manner.

(6) Using Tool C-3999, remove each of pistons (Fig. 13). **Care must be used so as not to scratch, burr or otherwise damage piston on outside diameter.** To do so effects sealing qualities of piston. Draw piston straight out of its bore. If a piston becomes cocked, removal is more difficult and piston or bore may be damaged.

(7) Using a small pointed wooden or plastic tool, remove piston seals from groove in cylinder bore (Fig. 14). Discard old seals. (Use care so as not to scratch bore or the seal groove.)

## CLEANING AND INSPECTION

Clean all parts in brake fluid and wipe dry, using clean, lint free, shop towels. Using an air hose, blow out the drilled passages and bores. Check the dust boots for punctures or tears. If punctures or tears are evident, new boots should be installed at reassembly.

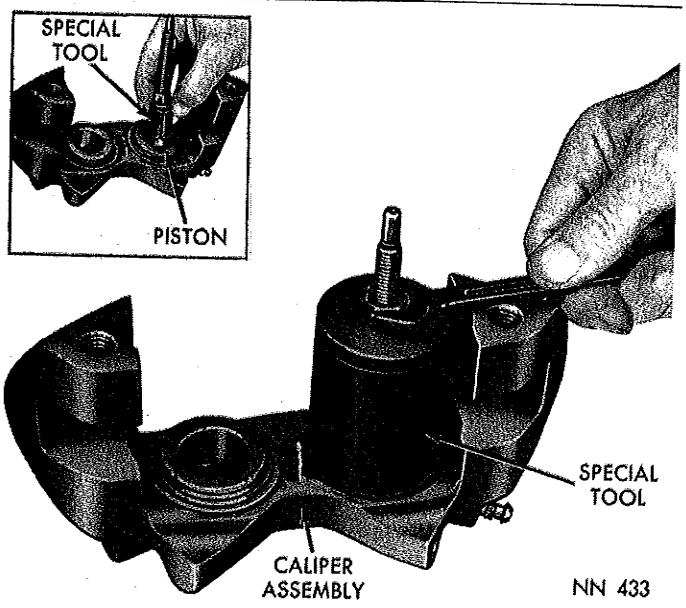


*Fig. 13—Removing Pistons from Caliper*

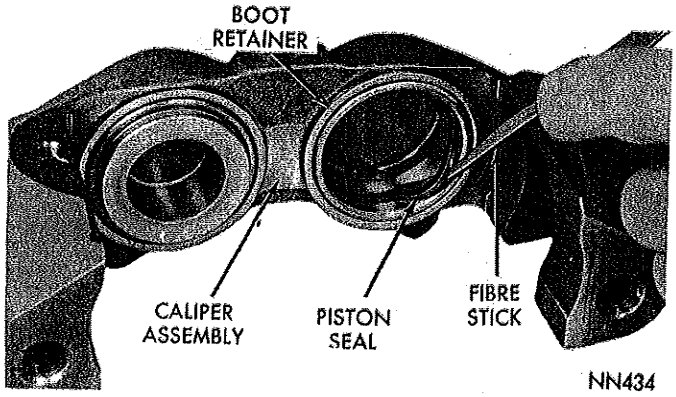


*Fig. 14—Removing Piston Seals from Caliper*

Inspect the piston bores in both housings for scoring or pitting. Install a new piston if it is pitted, scored or the chrome plating is worn off. Check the dust boot retainer ring in the caliper housing for damage. Bores that show light scratches or corrosion, can usually be cleaned with crocus cloth. However, bores that have deep scratches or scoring may be honed, using Tool C-3993, providing the diameter of the bore is not increased more than .002 inch. If the bore does not clean up within this specification, a new caliper housing should be installed. (Black stains on the bore walls are caused by the piston seals and will do no harm.)

**When using hone C-3993 (Fig. 15) be sure and install the hone baffle before honing bore. The baffle is used to protect the hone stones from damage. After honing the bore carefully, clean the seal groove with a stiff non-metallic rotary brush.**

**Use extreme care in cleaning the caliper after honing. Remove all dust and grit by flushing the caliper with brake fluid; wipe dry with a clean lintless cloth and then clean a second time in the same manner.**

## ASSEMBLING THE CALIPER

To reassemble the disc brake caliper, refer to (Fig. 11), then proceed as follows:

(1) Clamp inner caliper half in a vise (with protector jaws) by mounting lugs.

(2) If it was necessary to install a new dust boot retainer ring, contact area on housing should be thoroughly cleaned and Loctite Sealant Grade H (or equivalent) applied to retainer ring on surface where

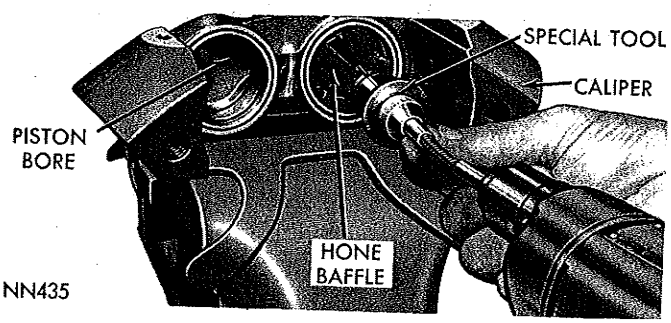


*Fig. 15—Honing Piston Bores*

MyMopar.com

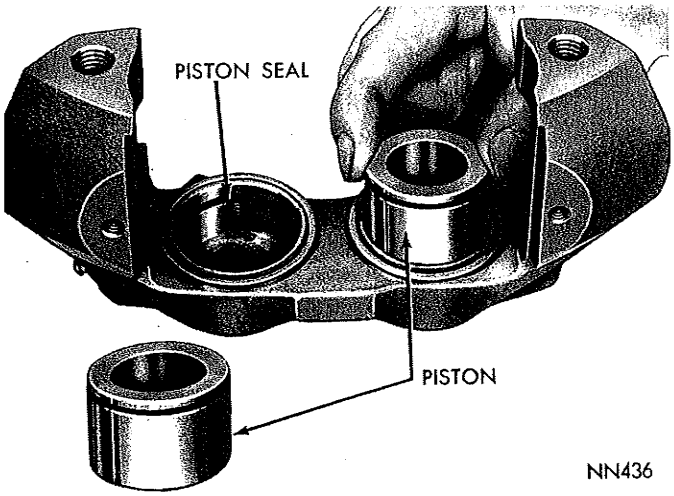


*Fig. 16—Installing Pistons in the Caliper*

it seats in housing, then install retainer ring.

(3) Dip new piston seals in clean brake fluid and install in caliper grooves. The seal should be positioned at one area in groove and gently worked around cylinder bore with a finger until properly seated. **Never use an old piston seal.** (Be sure seals are not twisted or rolled.)

(4) Coat outside diameter of pistons with clean brake fluid and install them in cylinder bores (Fig. 16) with open end of piston and boot retaining groove facing out of cylinder.

(5) Position piston squarely in bore and apply slow steady pressure until piston is positioned. **If piston will not position itself, remove piston and check position of seal for proper position in groove.**

(6) Install a new dust boot in position over caliper retaining ring and in groove in piston. **Be sure dust boot is properly seated.** Install new remaining dust boots in same manner.

(7) Install caliper half on one clamped in vise, then install assembly bolts (bridge bolts) and tighten from 70 to 80 foot-pounds. **(Under no condition should these bolts be substituted or replaced by an inferior bolt. The use of bolts other than those specified for this purpose, could cause a caliper failure resulting in an accident.**

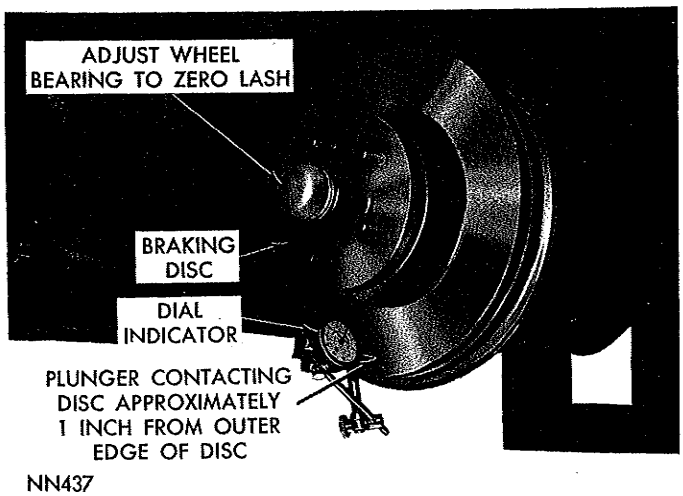


*Fig. 17—Checking the Braking Disc Runout*

(8) Install transfer tube and tighten securely.

(9) Install bleeder screw but do not tighten.

## INSTALLING THE CALIPER

Before installing the caliper assembly over the brake disc, check the disc for runout. Mount a dial indicator (Fig. 17) and check the lateral runout. Runout should not exceed .0025 inch. If runout exceeds the specified figure, remove the disc and install a new one. (Be sure the wheel bearings are adjusted to zero lash during this check.) Readjust wheel bearings after check.

(1) Install caliper assembly over disc and align mounting holes. Install mounting bolts and tighten from 45 to 60 foot-pounds. **A check should be made to be sure that braking disc runs squarely and centrally within caliper opening. There should be approximately .090 to .120 inch clearance between outside diameter of braking disc and caliper. There should also be a minimum of .050 from either disc face to machined groove in outboard caliper.**

(2) Install shoe and lining assemblies between caliper and braking disc.

(3) Install caliper splash shield in position on caliper and install attaching bolts. Tighten securely.

(4) Open bleeder screw, then reconnect brake line at caliper housing. Allow caliper to fill with brake fluid; then, close bleeder screw. (Be sure all air bubbles have escaped; bleeding caliper.) Replenish brake fluid in master cylinder.

(5) **"Pump brake pedal several times to actuate piston seals and position shoe and lining assemblies.**

(6) After assembling caliper unit be sure and check for fluid tightness under maximum pedal pressures. (Recheck master cylinder reservoir level.) **Check and be sure that lower shock absorber mounting bolt has been installed from rear and nut toward front of vehicle. This is important.**

(7) Install wheel and tire assembly and tighten wheel stud nuts to 55 foot-pounds. **This is important.** Install wheel cover.

(8) Remove jackstands or lower hoist.

**CAUTION: Road test the vehicle and make several heavy 40 MPH stops to wear off any foreign material on the brakes and to seat the units. The vehicle may pull to one side or the other if this is not done.**

## REMOVING THE BRAKING DISC AND HUB

Should it become necessary to remove the braking disc for installation of a new disc, proceed as follows:

(1) Remove wheel cover and wheel and tire assembly.

(2) Remove caliper assembly as described under

MyMopar.com

"Removing Caliper" paragraph, (but do not disconnect brake line). Suspend caliper from wire hook or loop to avoid strain on hose and damage to transfer tube.

(3) Remove grease cup, cotter pin, nut lock, nut, thrust washer and outer wheel bearing.

(4) Pull disc and hub off wheel spindle.

## INSTALLING THE BRAKING DISC AND HUB

(1) Slide brake disc and hub assembly on spindle.

(2) Install outer bearing, thrust washer, and nut.

(3) Tighten wheel bearing adjusting nut to 90 inch-pounds while rotating hub and disc.

(4) Position lock nut on nut with one pair of slots in line with cotter pin hole.

(5) Back off adjusting nut and lock assembly one slot then install cotter pin. The resulting adjustment should be zero (no preload) end play. (This is very important, when checking disc runout.)

(6) Install a dial indicator C-3339 (Fig. 17) and check runout of disc on both sides. The runout should not exceed .0025 inch. Readjust wheel bearing clearance after checking braking disc runout.

(7) Clean grease cap, coating inside with wheel grease (do not fill) and install cap.

(8) Install caliper assembly as described in "Installing the Caliper" paragraph.

(9) Install wheel and tire assembly and wheel cover.

(10) Remove jackstands or lower hoist.

(11) Road test vehicle as described in "Brake Shoe Installation" paragraph.

### *Removing The Splash Shield*

Should it become necessary to remove the braking disc splash shield because of damage or the installation of the steering knuckle, proceed as follows:

(1) Raise vehicle on a hoist or jackstands.

(2) Remove wheel cover and wheel and tire assembly.

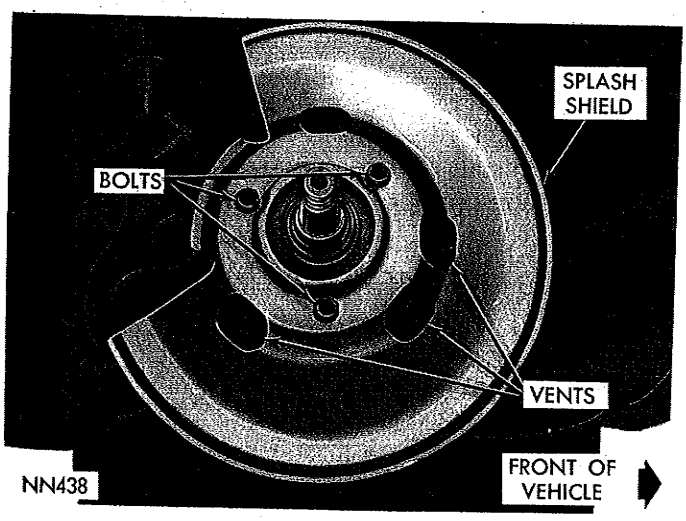


*Fig 18—Disc Splash Shield Mounting*

(3) Remove caliper assembly, as described under "Removing Caliper" paragraph. Do not disconnect brake line.

(4) Remove grease cup, cotter pin, nut lock, nut, thrust washer and outer wheel bearing.

(5) Pull braking disc and hub off wheel spindle.

(6) Remove bolts that attach splash shield (Fig. 18) to steering knuckle.

### *Installing The Splash Shield*

To install the braking disc splash shield, refer to (Fig. 18) then proceed as follows:

(1) Position styrafoam gasket and install splash shield in position on steering knuckle, with cutout section toward rear.

(2) Align mounting holes and install attaching bolts. Tighten to 17 inch-pounds.

(3) Reinstall braking disc and hub assembly. Install outer bearing, thrust washer and nut. Tighten front wheel bearing as described previously. Install nut lock, cotter pin and grease cap.

(4) Install caliper assembly as described under "Installing Caliper" paragraph.

(5) Install wheel and tire. Tighten wheel stud nuts to 55 foot-pounds. Install wheel cover.

(6) Remove jackstands or lower hoist.

## REMOVING THE MASTER CYLINDER

Should it become necessary to remove the master cylinder for repair or overhaul, proceed as follows:

(1) Remove nuts that attach master cylinder to dash panel, (or power brake unit, if so equipped).

(2) Disconnect brake tube at master cylinder outlet, then plug hole.

(3) Slide master cylinder straight out and away from dash panel and remove from vehicle.

## DISASSEMBLING THE MASTER CYLINDER

To disassemble the master cylinder, refer to (Figs.

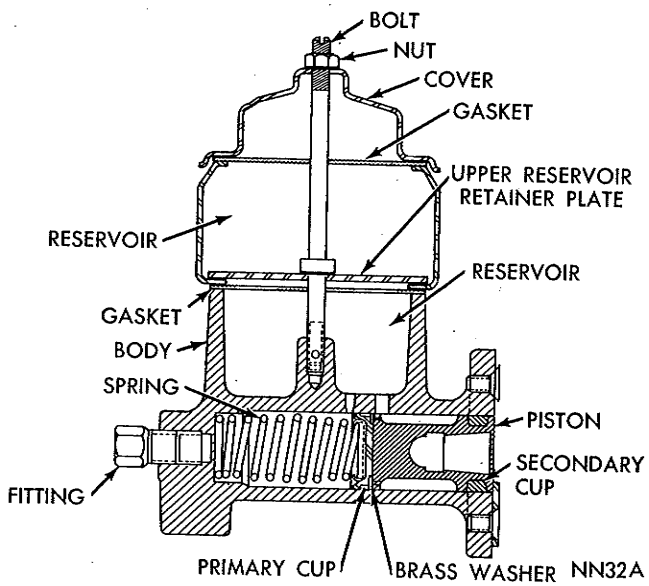


*Fig. 19—Disc Brake Master Cylinder (Sectional View)*

MyMopar.com

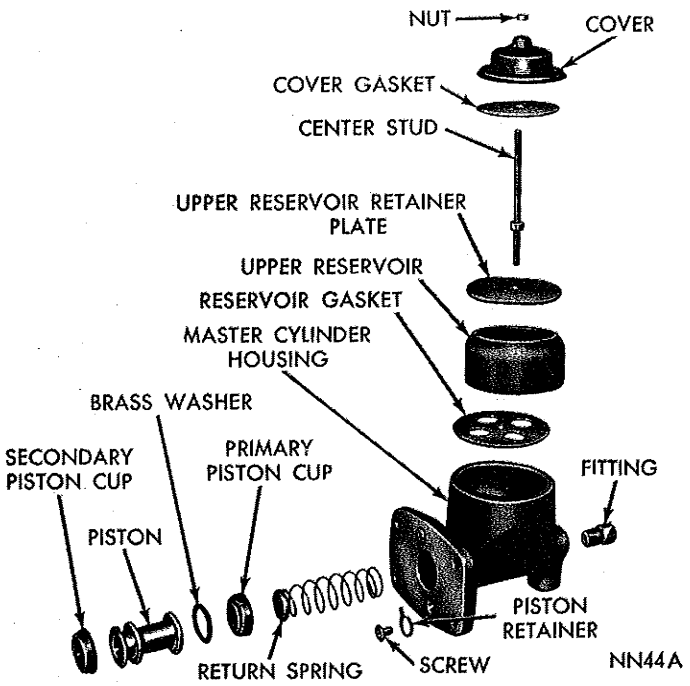


***Fig. 20—Disc Brake Master Cylinder (Exploded View)***

19 and 20), then proceed as follows:

(1) Clean outside of master cylinder thoroughly.

(2) Remove master cylinder cover retaining nut; remove cover and gasket, and drain brake fluid.

(3) Remove piston stop flange attaching screw and remove piston assembly. **It should be noted at this time, that check valve usually located in master cylinder bore is not used.** The residual check valve (Fig. 21) is located in brake line, after brake line tee (mounted adjacent to front fender splash shield (Fig. 6). There is no hydraulic pressure to disc brake caliper when brakes are not applied, because fluid source at master cylinder bypasses residual check valve.

(4) Remove brass washer between piston and the cup. Remove primary cup and spring.

(5) Using a wrench, loosen and remove center stud and lift off upper reservoir and gasket. Remove plate from inside reservoir.

## CLEANING AND INSPECTION

Clean the master cylinder reservoir and main body, using a suitable solvent and blow dry with compressed air. Wash the master cylinder bore with clean brake fluid and inspect for scoring or pitting.

If the master cylinder piston is badly scored, or corroded, replace it with a new one. Be sure it is a disc brake cylinder with reservoir extension and without residual pressure valve. The primary and secondary cups should be replaced when reconditioning the master cylinder.

Master cylinder walls that have light scratches or show signs of corrosion, can usually be cleaned up with crocus cloth. However, cylinders that have deep scratches or scoring may be honed, providing the diameter of the cylinder bore is not increased more than .002 inch. A master cylinder with a bore that does not clean up at .002 inch should be discarded and a new master cylinder installed. (Black stains on the cylinder wall are caused by the piston cups and will do not harm.) **Use extreme care in cleaning the master cylinder after reconditioning. Remove all dust or grit by flushing the cylinder bore with alcohol; wipe dry with a clean lintless cloth and clean a second time with alcohol. Dry the master cylinder bore with compressed air then flush with clean brake fluid. (Be sure the .028 inch diameter hole compensator port in the master cylinder bore is open.**

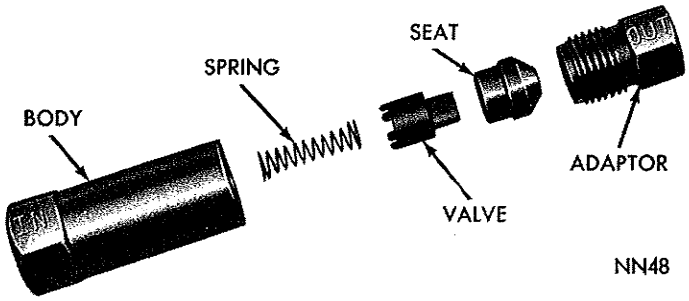


***Fig. 21—Residual Pressure Check Valve (Exploded View)***

## ASSEMBLING THE MASTER CYLINDER

Before assembling, the piston and cups should be dipped in clean brake fluid. To reassemble the master cylinder, refer to (Figs. 19 and 20) then proceed as follows:

(1) Install piston return spring in cylinder bore with closed end outward.

(2) Install primary cup in cylinder bore with open end of cup over the closed end of return spring.

(3) Install the secondary cup on master cylinder piston and install piston assembly in bore with flat brass washer between piston and primary cup.

(4) Install piston retainer and screw to retain piston assembly.

(5) Place reservoir gasket in position on lower reservoir, then install retaining plate in upper reservoir.

(6) Place upper reservoir in position on reservoir gasket, then install center stud. Tighten to 50 inch-pounds. **(Be sure upper reservoir is centered on lower casting.)**

## INSTALLING THE MASTER CYLINDER

(1) Slide master cylinder over mounting studs on dash panel or power brake unit (if so equipped), being sure brake push rod engages piston. Install attaching nuts and tighten to 200 inch-pounds.

(2) Attach brake line to master cylinder and tighten securely.

(3) Refill master cylinder reservoirs and bleed brakes.

MyMopar.com

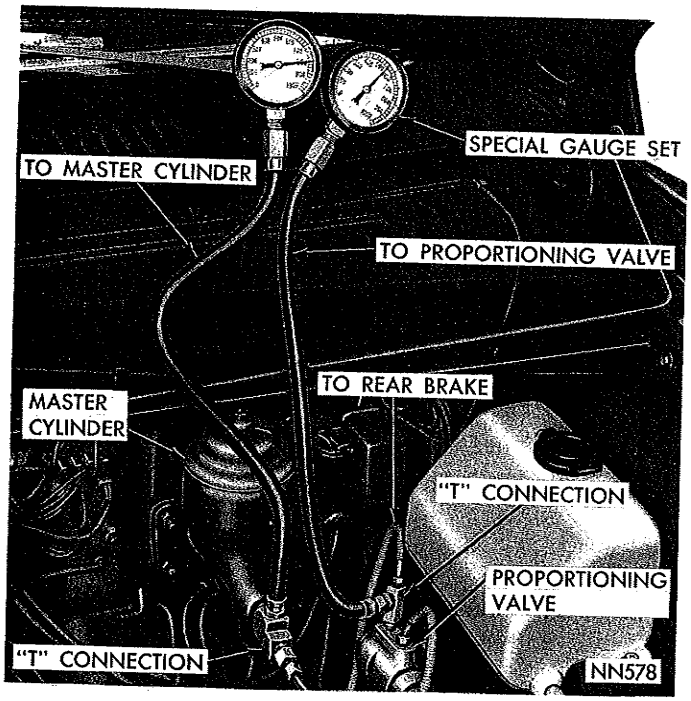


***Fig. 22—Checking the Proportioning Valve***

(4) Install reservoir cover and gasket. Install attaching nut and tighten snugly.

## BLEEDING THE DISC BRAKE

The disc brake hydraulic system can be bled manually or with pressure bleeding equipment. On disc brake equipped vehicles, the brake pedal will require more pumping, and frequent checking of the fluid level in the master cylinder during the bleeding operation.

It will be necessary to remove the front wheel and tire assemblies in order to gain access to the bleeder screw, located on the outboard caliper housing at the top. (Refer to Fig. 1.)

**Never use brake fluid that has been drained from the hydraulic system, when bleeding the brakes.**

On vehicles equipped with disc brakes, be sure that the disc brake pistons are returned to their normal positions and that the shoe and lining assemblies are properly seated.

Before driving the vehicle, check the operation of the brakes to be sure that a firm pedal has been obtained.

(1) Remove wheel covers, then raise vehicle using a hoist or jackstands.

(2) Remove wheel and tire assemblies.

(3) Bleed brakes in usual manner, starting with right rear, then proceeding to left rear, right front and left front in order.

After bleeding the brakes, proceed as follows:

(1) Install wheel and tire assemblies, tightening wheel stud nuts to 55 foot-pounds.

(2) Install wheel covers.

(3) Remove jackstands or lower hoist.

### *Testing The Proportioning Valve*

When a premature rear wheel slide is obtained on brake application, it usually is an indication that the fluid pressure to the rear brakes is above the 50% reduction ratio for the rear line pressure and that a malfunction has occurred within the proportioning valve, which should be tested.

To test the proportioning valve, proceed as follows:

(1) Install one of Gauge Set C-4007 and "T" in brake line between master cylinder and proportioning valve and remaining Gauge and "T" at output end of valve and brake line. (Fig. 22). **Be sure all joints are fluid tight.**

(2) Have a helper exert pressure on brake pedal (holding pressure). Obtain a reading on master cylinder output of approximately 800 p.s.i.

(3) While pressure is being held as above, reading on valve outlet Gauge should be 540—560 p.s.i.

If the proportioning valve pressure readings do not meet the specifications, the valve should be removed and a new valve installed.

# SPECIFICATIONS

## PLYMOUTH—VALIANT

| | 6 CYL. | V-8 & H.D. |
|---|---|---|
| TYPE | Duo-Servo Single Anchor | Duo-Servo Single Anchor |
| DRUM DIAMETER | 9 inches | 10 inches |
| NUMBER OF BRAKE SHOES | 8 | 8 |
| Front | 2-9/16″ wide | 2-5/16″ wide |
| Rear | 2-1/16″ wide | 1-13/16″ wide |
| BRAKE LINING | Moulded Asbestos | Moulded Asbestos |
| Front Primary | 2¼″ wide 7⅝″ long | 2¼″ wide 8½″ long |
| Front Secondary | 2½″ wide 9⅝″ long | 2¼″ wide 11″ long |
| Rear Primary | 2″ wide 7⅝″ long | 1¾″ wide |
| Rear Secondary | 2″ wide 9⅝″ long | 1¾″ wide |
| Thickness Primary | 3/16″ | 3/16″ |
| Secondary | ¼″ | ¼″ |
| WHEEL CYLINDER | 4 per car | 4 per car |
| Front Wheel Cylinder Bore | 1″ | 1⅛″ |
| Rear Wheel Cylinder Bore | 13/16″ | 15/16″ |
| MASTER CYLINDER BORE | 1″ | 1″ |

MyMopar.com

| PLYMOUTH—BELVEDERE | 6 CYL. | V-8 & H.D. & SUB. |
|---|---|---|
| TYPE | Duo-Servo Single Anchor | Duo-Servo Single Anchor |
| DRUM DIAMETER | 10 inches | 10 inches |
| (Police Special & Heavy Duty) | | 11 inches |
| NUMBER OF BRAKE SHOES | 8 | 8 |
| WIDTH (Standard) | | |
| Front | 2¼ inches | 2½ inches |
| Rear | 1¾ inches | 2½ inches |
| (POLICE SPECIAL & HEAVY DUTY) | | |
| Front | | 3 inches |
| Rear | | 2½ inches |
| BRAKE LINING (10 INCH) | Moulded Asbestos | Moulded Asbestos |
| Front Primary | 8½ inches | 8½ inches |
| Front Secondary | 11 inches | 11 inches |
| Rear Primary | 8½ inches | 8½ inches |
| Rear Secondary | 11 inches | 11 inches |
| BRAKE LINING (11 INCH) | | |
| Front Primary | | 9¼ inches |
| Front Secondary | | 12⅛ inches |
| Rear Primary | | 9¼ inches |
| Rear Secondary | | 12⅛ inches |
| Thickness Primary | 3/16 inches | 3/16 inches |
| Secondary | ¼ inch | ¼ inch |
| WHEEL CYLINDER | | |
| Front Wheel Cylinder Bore | 1⅛ inches | 1⅛ inches |
| Rear Wheel Cylinder Bore | 15/16 inches | 15/16 inches |
| MASTER CYLINDER BORE | | 1 inch |

| PLYMOUTH—FURY | |
|---|---|
| DRUM DIAMETER | |
| Standard | 11 inches |
| Police Special and Heavy Duty | 11 inches |
| WIDTH | |
| Front | 2¾ inches |
| Rear | 2 inches |
| POLICE SPECIAL AND HEAVY DUTY | |
| Front | 3 inches |
| Rear | 3 inches |
| LENGTH | |
| Front Brake (Primary) | 9¼ inches |
| (Secondary) | 12⅛ inches |
| Rear Brake (Primary) | 9¼ inches |
| (Secondary) | 12⅛ inches |
| POLICE SPECIAL AND HEAVY DUTY-11 Inch | |
| Front Brake (Primary | 9¼ inches |
| (Secondary) | 12⅛ inches |
| Rear Brake (Primary) | 9¼ inches |
| (Secondary) | 12⅛ inches |
| WHEEL CYLINDER | |
| Front Wheel Cylinder Bore | 1⅛ inches |
| Rear Wheel Cylinder Bore | 15/16 inches |

## KELSEY-HAYES DISC BRAKE SPECIFICATIONS

| | |
|---|---|
| Type of Brake | Fixed Caliper Disc |
| Location | Front Wheels Only |
| Master Cylinder Reservoir | Vertical Dual |
| Proportioning Valve Location | Front Fender Wheelhouse |
| Brake Adjustment | None (Automatic) |
| Residual Valve Location | Front Fender Wheelhouse |
| CALIPER ASSEMBLY | |
| Shoe and Lining Removal | Radially Outward (Remove Shields) |
| Number of Pistons | 4 (Each Unit) |
| Piston Diameter | 1⅝" |
| Piston Bore Diameter | 1.636 |
| Maximum Allowable (After Honing) | 1.638 |
| Piston Seals | Moulded Rubber (Square Section) |

MyMopar.com

| | |
|---|---|
| Piston Dust Boots | .092 Wide, .100 Radial Thickness External Moulded Rubber |
| Bleeder Screw Location | 4 Per Unit |
| Transfer Tube Type | Outer Housing 3/8" |
| BRAKING DISC | Short Overhead |
| Type | Ventilated Cast Iron |
| Diameter Outside | 11.04 |
| Inside | 6.91 |
| Disc Runout (Maximum Allowable) T.I.R. | .0025" |
| Disc Surface Finish | 15 to 80 Micro Inches |
| Disc Thickness | .810" |
| Disc Parallelism (Total Variation in Thickness) | .001" |
| BRAKE SHOE AND LINING | |
| Type | Bonded (Organic) |
| Lining Thickness | .400" (Nominal) |
| Width | 1.84" |
| Length | 4.82" |
| Braking Area | 8.50" Sq. In./Segment |
| Maximum Wear (Minimum Thickness Allowed) | Not less than 1/32" lining at any point or a minimum shoe and lining thickness of .180" |
| MASTER CYLINDER | |
| Piston Bore Diameter | 1" |
| Maximum Bore Diameter Allowable (After Honing) | .002" o.s. |
| Residual Valve | None |
| DISC SPLASH SHIELD | |
| Type | Vented-Stamped Steel |
| Mounting | 3 Bolts to Knuckle |
| RESIDUAL VALVE | |
| Type | Pressure Control |
| P.S.I. Cut In | 300 P.S.I. |
| 50% Reduction in Rear Line Pressure | After 300 P.S.I. Actuation Pressure. |
| WHEELS | |
| Type | Drop Center |
| Diameter | 14 x 4½" J Special |
| Formula "S" | 14 x 5½" J Special |

## TIGHTENING REFERENCE

| | FOOT-POUNDS |
|---|---|
| Caliper Mounting Bolts | 45-60 |
| Caliper Assembly Bridge Bolts | 70 to 80 |
| Disc Splash Shield Bolts | 10-20 |
| Caliper Bleeder Screw | 10 (120 in-lbs.) |
| Caliper Splash Shield | 7-9 |
| Brake Tube Fitting Nuts to Proportioning Valve | 70 in-lbs |
| Wheel Assembly to Front Wheel Hub and Disc Assembly Nuts | 55 |

## BUDD DISC BRAKE SPECIFICATIONS

| | |
|---|---|
| Type of Brake | Fixed Caliper Disc |
| Location | Front Wheels Only |
| Master Cylinder Reservoir | Vertical Dual |
| Residual Valve Location | On Rear Brake Line |
| Brake Adjustment | None (Automatic) |
| CALIPER ASSEMBLY | |
| Shoe and Lining Removal | From either top or bottom (Caliper Removed) |
| Number of Pistons | 4 (Each Assembly) |
| Piston Diameter | 2.368/2.369" |
| Piston Bore Diameter | 2.374/2.376" |
| Maximum Allowable (After Honing) | .002" O.S. |
| Piston Seals | Moulded Rubber (1 Per Piston) |
| Piston Dust Boots | External Moulded Rubber (1 Per Piston) |
| Dust Boot Retainers | Flat Coiled Steel (1 Per Piston) |

MyMopar.com

| | |
|---|---|
| Piston Return Springs | I Per Piston |
| Bleeder Screw Location | On Inner Housing |
| Cross Over Passage Seals | Rubber (2 Per Caliber) |
| BRAKING DISC | |
| Type | Ventilated Cast Iron |
| Diameter Outside | 11.87/11.89″ |
| Inside | 7.23/7.25″ |
| Disc Runout (Max. Allowable) | .005″ |
| Disc Surface Finish | 30-60 Micro Inches |
| Disc Thickness | .8725/.8775″ |
| Disc Mounting (To Hub) | 5 Bolts |
| BRAKE SHOE AND LINING | |
| Type | Organic Lining |
| Thickness | ½″ Nom. |
| Width | 2-3/16″ |
| Length | 5-3/16″ |
| Braking Area (Per Shoe) | Approx. 10 Sq. Inches |
| Maximum Wear Limit | Not less than 1/32″ at any point |
| BRAKING DISC HUB | |
| Type | Malleable Cast Iron |
| MASTER CYLINDER | |
| Piston Bore Diameter | 1⅛″ |
| Maximum Allowable (After Honing) | .002″ O.S. |
| Residual Pressure Valve | None |
| DISC SPLASH SHIELD | |
| Type | Vented Stamped Steel |
| Mounting | 3 Bolts to Knuckle |
| WHEELS | |
| Type | Drop Center |
| Diameter | 15 x 6 K |

## TIGHTENING REFERENCE

| | FOOT-POUNDS |
|---|---|
| Caliper Mounting Bolts | 70-80 |
| Caliper Assembly Bolt 7/16″ | 50-60 |
| ⅝″ | 140-160 (Very Important) |
| Braking Disc to Hub Bolts | 50-60 |
| Splash Shield Bolts | 17 |

MyMopar.com

# CLUTCH

## CONTENTS


| | Page |
|---|---|
| CLUTCH | 3 |
| CLUTCH HOUSING ALIGNMENT | 9 |
| CLUTCH PEDAL FREE PLAY | 3 |
| CLUTCH RELEASE BEARING | 8 |
| CLUTCH RELEASE FORK | 7 |
| CRANKSHAFT TRANSMISSION DRIVE PINION BUSHING | 7 |
| SERVICE DIAGNOSIS | 3 |
| SPECIFICATIONS | 10 |
| TIGHTENING REFERENCE | 11 |
| TORQUE SHAFT AND BEARINGS | 8 |
| STEAM CLEANING PRECAUTIONS | 10 |


## GENERAL INFORMATION

The clutch is of the single dry disc type, with no adjustment for wear being provided in the clutch itself. The clutch pedal linkage, however, is provided with an adjustment feature to maintain correct pedal free play.

### *6-Cylinder Vehicles*

The standard clutch size for Valiant models with the 170 cubic inch engine is 9⅛ inches. The special equipment clutch size for Valiant models with the 170 cubic inch engine is 9¼ inches. The standard clutch size for Valiant, Belvedere and Fury models with the 225 cubic inch engine is 9¼ inches. The special equipment clutch on Belvedere model is 10 inches and on Fury models is 11 inches. These latter clutches have special bolts to attach them to the flywheel. No lockwashers are used with these bolts.

No adjustment should be attempted on the three pressure plate release levers. The three levers are preset during manufacture and should never be disturbed.

### *8-Cylinder Vehicles*

The standard clutch size for Valiant models with the 273 cubic inch engine is 9½ inches, and on Belvedere models with the 273 cubic inch engine, 10 inches.

The standard clutch size for Belvedere models using the 318 and 361 cubic inch engines is 10½ inches. Fury models equipped with the 318 cubic inch engine use a 10 inch clutch as standard.

The special equipment clutch size on Fury models is 10½ inches.

The Semi-Centrifugal type clutch (Fig. 1) used on 8-cylinder models with 318, 361, 383 and 426 cubic inch engines, combines the feature of low pedal effort with that of a clutch capable of transmitting the full torque of the engine.

Six cylindrical rollers, located in the pressure plate, are free to move outward under centrifugal force until they contact the cover. As the engine speed increases, the rollers act as wedges between the cover and the pressure plate. The faster the clutch revolves,

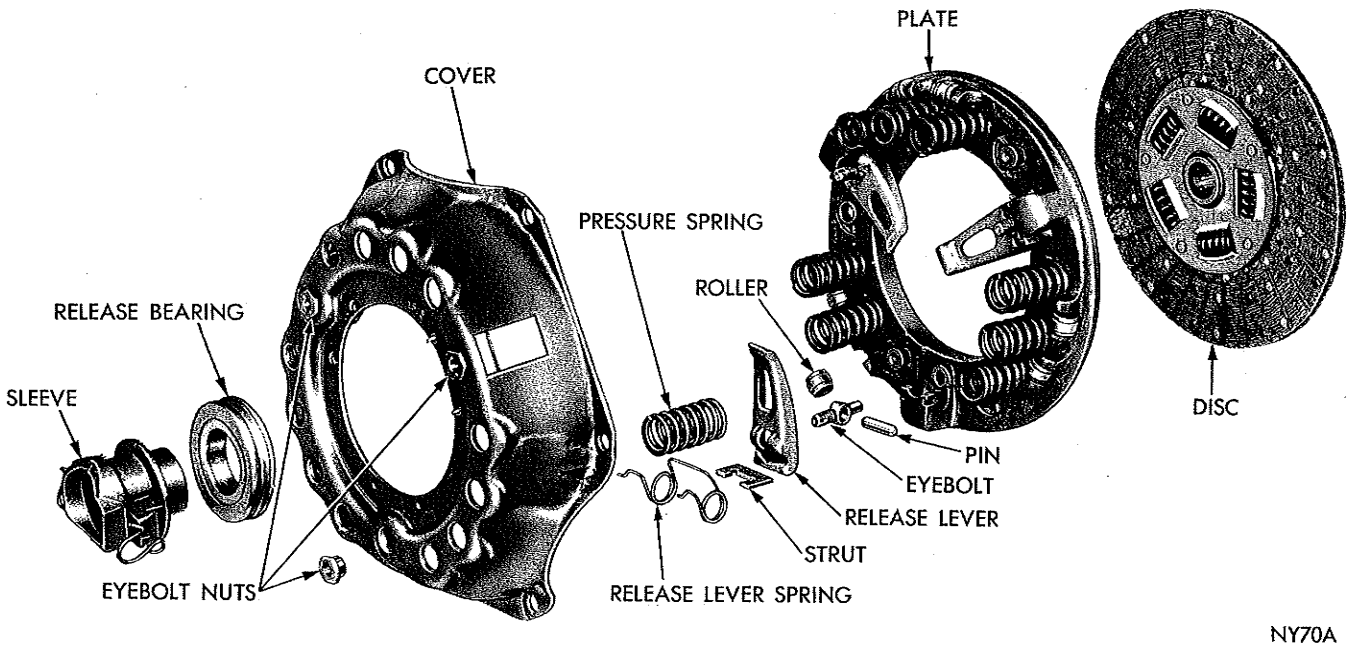


*Fig. 1—Semi-Centrifugal Clutch (318, 361, 383 and 426 Cu. In. Engines)*

MyMopar.com

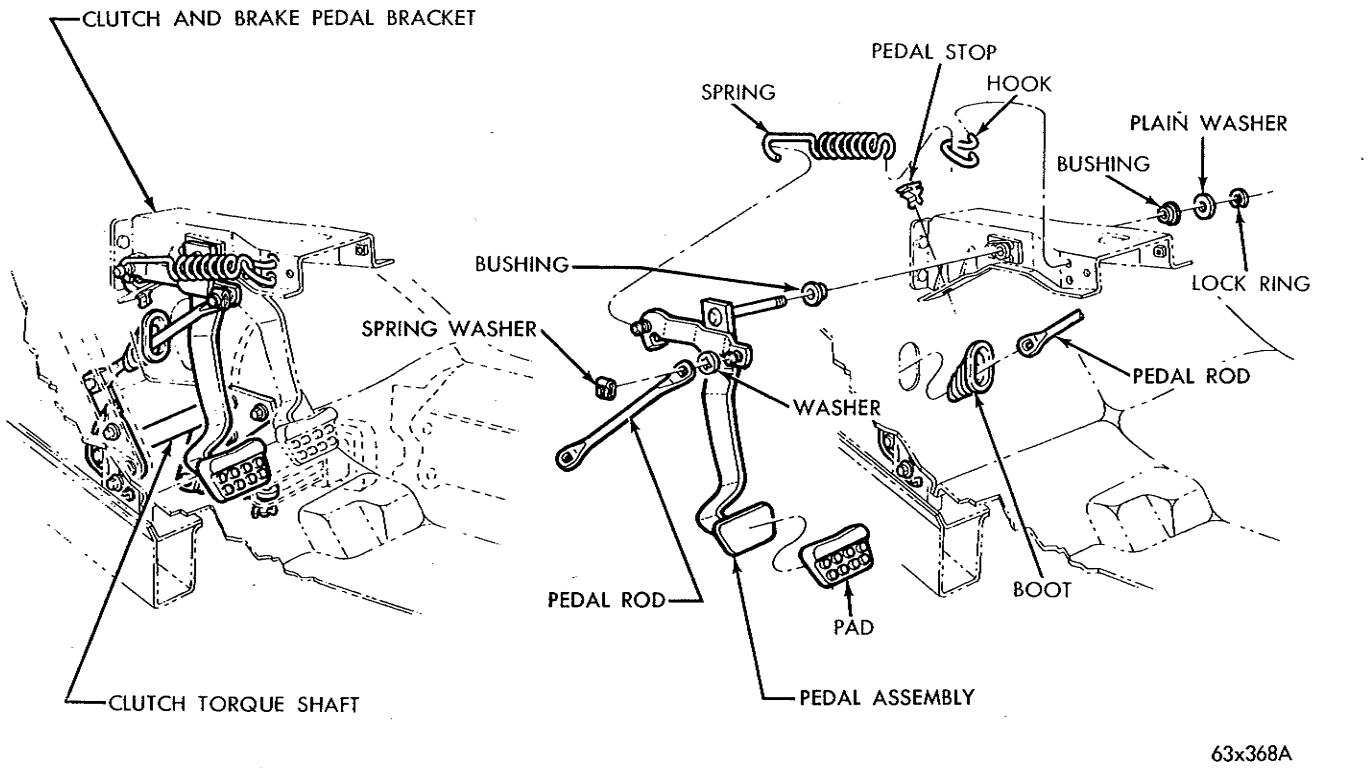


***Fig. 2—Clutch Pedal and Linkage (Valiant Models)***

the greater the pressure on the plate. The greater pressure increases the normal load on the disc assembly.

No adjustment should be attempted on the three pressure plate release levers. The three levers are preset during manufacturing and should never be disturbed.

### Clutch Pedal and Bracket

The upper end of the clutch pedal on all 6-cylinder models, except Belvedere and Fury models with heavy duty clutch, pivots in the pedal mounting bracket on two nylon bushings (Fig. 2). On 6-cylinder

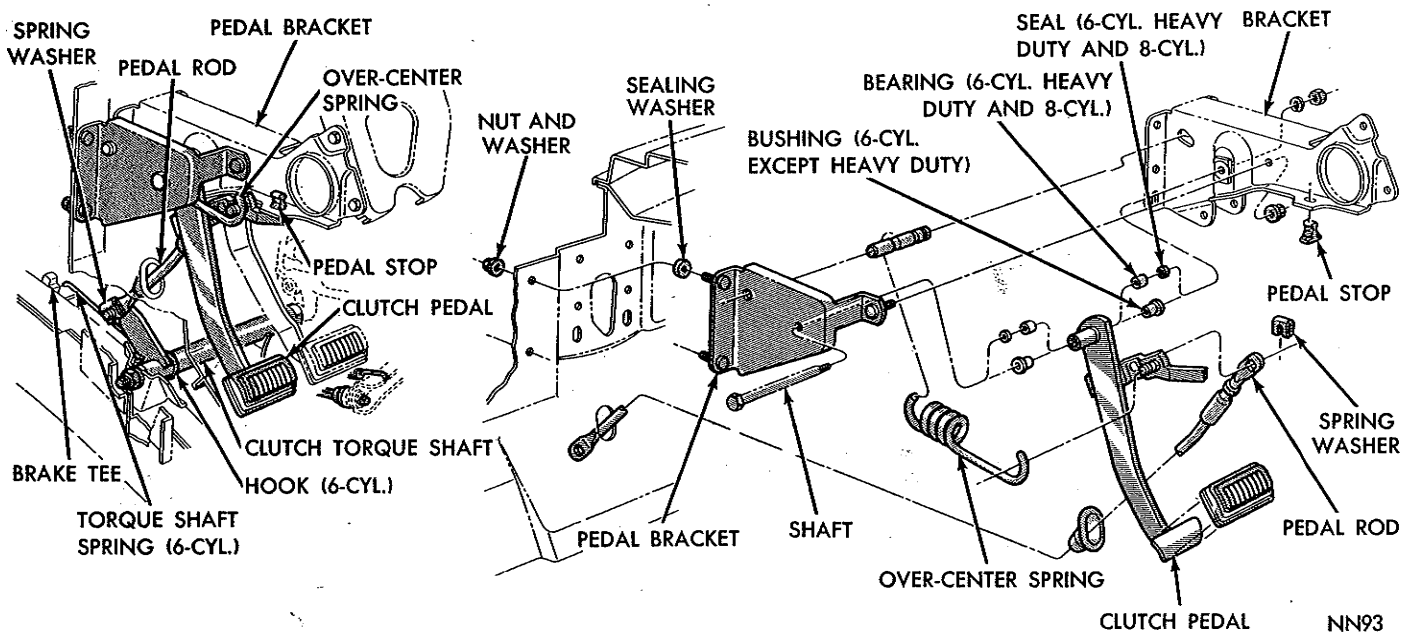


***Fig. 3—Clutch Pedal and Linkage (Belvedere 6 and 8 Cyl. Models)***

MyMopar.com

heavy duty and all 8-cylinder models, the pedal pivots on two needle bearings (Fig. 3). These parts do not require periodic lubrication.

A non-adjustable over-center spring (Fig. 2, 3 or 4) is provided between the pedal and pedal bracket to allow easy clutch pedal operation.

An additional spring connected between the outer end of the torque shaft and the brake tube tee clip, on 6-cylinder Belvedere and Fury models (Figs. 6 and 7) equalizes the clutch fork return spring load on the torque shaft bearings.

## SERVICE DIAGNOSIS

| Condition | Possible Cause | Correction |
|---|---|---|
| **CLUTCH CHATTER** | (a) Worn or damaged disc assembly. | (a) Replace disc assembly. |
| | (b) Grease or oil on disc facings. | (b) Replace disc assembly. |
| | (c) Improperly adjusted cover assembly. | (c) Replace clutch assembly. |
| **CLUTCH SLIPPING** | (a) Burned, worn, or oil soaked facings. | (a) Replace disc assembly. |
| | (b) Insufficient pedal free play. | (b) Adjust release fork rod. |
| | (c) Weak or broken pressure springs. | (c) Replace clutch assembly. |
| **DIFFICULT GEAR SHIFTING** | (a) Excessive pedal free play. | (a) Adjust release fork rod. |
| | (b) Worn or damaged disc assembly. | (b) Replace disc assembly. |
| | (c) Improperly adjusted cover assembly. | (c) Replace clutch assembly. |
| | (d) Clutch disc splines sticking. | (d) Remove disc assembly and free up splines or replace disc. |
| **CLUTCH NOISY** | (a) Dry clutch linkage. | (a) Lubricate where necessary. |
| | (b) Worn release bearing. | (b) Replace release bearing. |
| | (c) Worn disc assembly. | (c) Replace disc assembly. |
| | (d) Worn release levers. | (d) Replace clutch assembly. |
| | (e) Worn or dry pilot bushing. | (e) Lubricate or replace bushing. |
| | (f) Dry contact-pressure plate lugs in cover. | (f) Lubricate very lightly. |

## SERVICE PROCEDURES

### CLUTCH PEDAL FREE PLAY

The only adjustment required for the clutch is the pedal linkage adjustment to provide the prescribed clutch pedal free play. This is the pedal movement required to close the clearance between the release bearing and the clutch release levers when releasing the clutch. The adjustment is necessary to restore pedal free play reduced by normal clutch wear.

#### *Adjusting Clutch Pedal Free Play*

(1) Inspect condition of clutch pedal rubber stop (Fig. 2, 3 or 4). If the stop is damaged, install a new one.

(2) On models using A-745 transmission, first disconnect interlock clutch rod at transmission end.

(3) Adjust linkage by turning the self-locking nut (Fig. 5, 6, 7 or 8) to provide 5/32 inch free movement at outer end of fork. This movement will provide the prescribed one-inch free play at the pedal (Fig. 2, 3 or 4).

(4) Assemble interlock clutch rod, if used, to transmission pawl. If necessary to adjust, refer to "Transmission," Group 21.

### CLUTCH

Improper operation or excessive wear may impair the clutch function to a point where it may be necessary to remove and replace the disc and/or clutch assembly. Should this operation become necessary, proceed as follows.

#### *Removal*

(1) Remove transmission. See "Manual Transmission," Group 21, for detailed procedure.

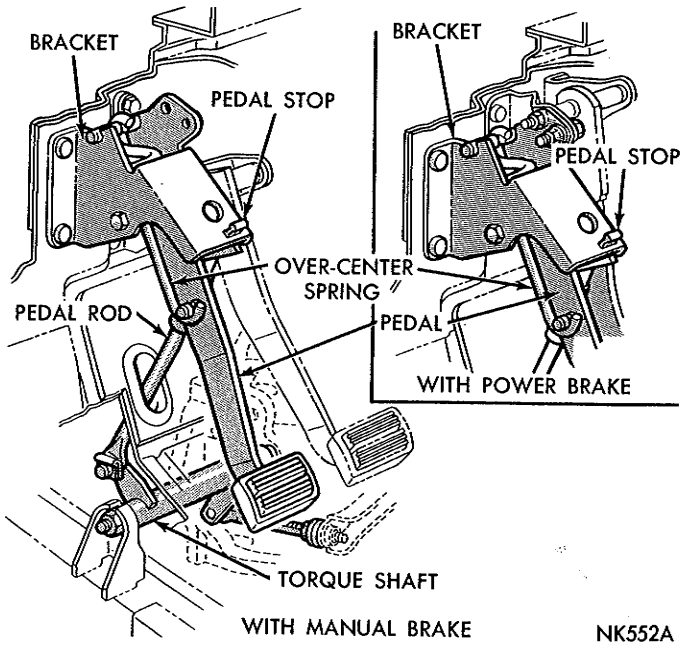


*Fig. 4—Clutch Pedal and Linkage (Fury Models)*

MyMopar.com

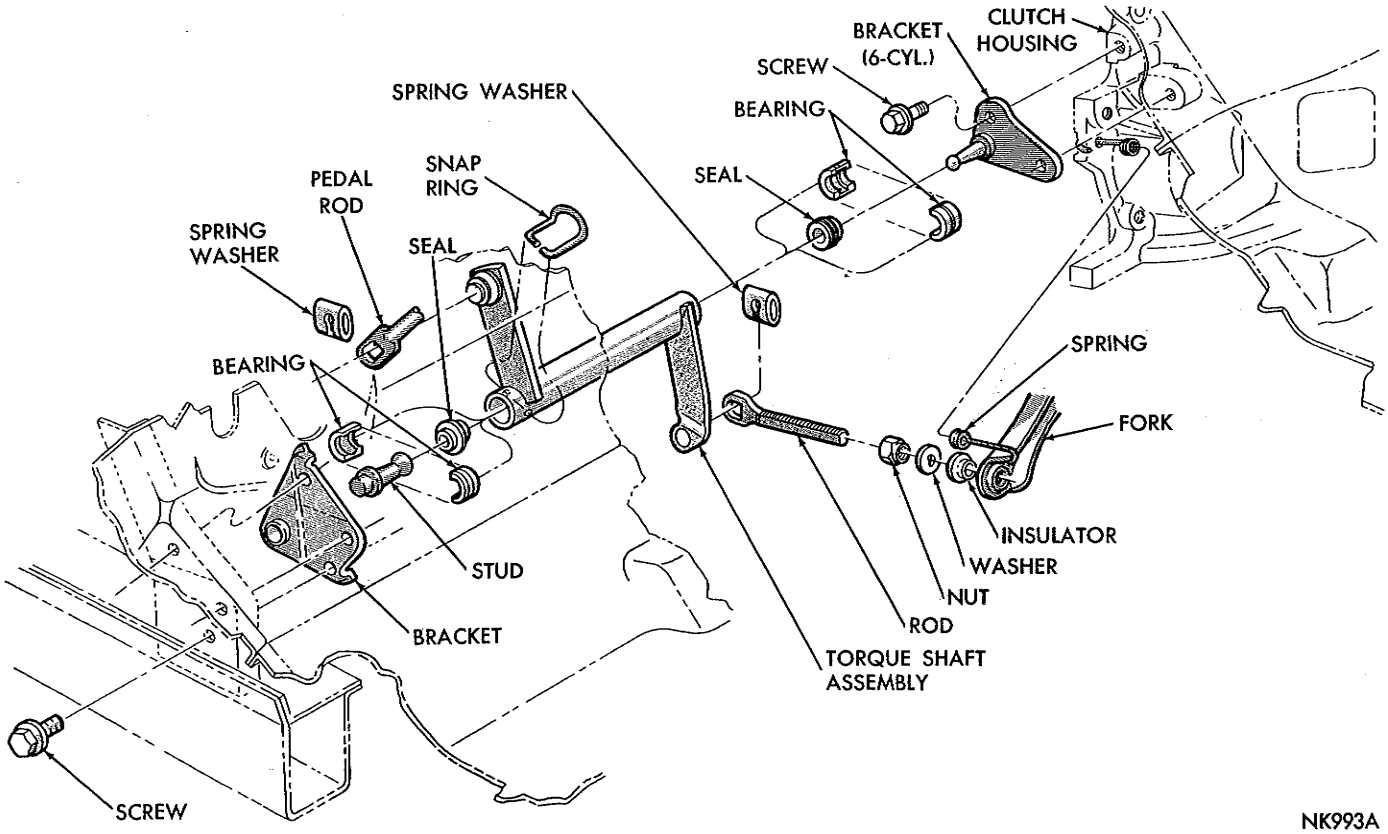


***Fig. 5—Clutch Torque Shaft and Linkage (Valiant Models)***

(2) Remove clutch housing pan.

(3) Disconnect clutch linkage and return spring at fork (Fig. 5, 6, 7 or 8). On Belvedere and Fury 6-cylinder models, also disconnect the torque shaft spring (Fig. 6 or 7).

(4) Remove clutch release bearing and sleeve assembly from clutch release fork (Fig. 9).

(5) Mark clutch cover and flywheel (Fig. 10) to maintain their same relative positions during installation of clutch assembly.

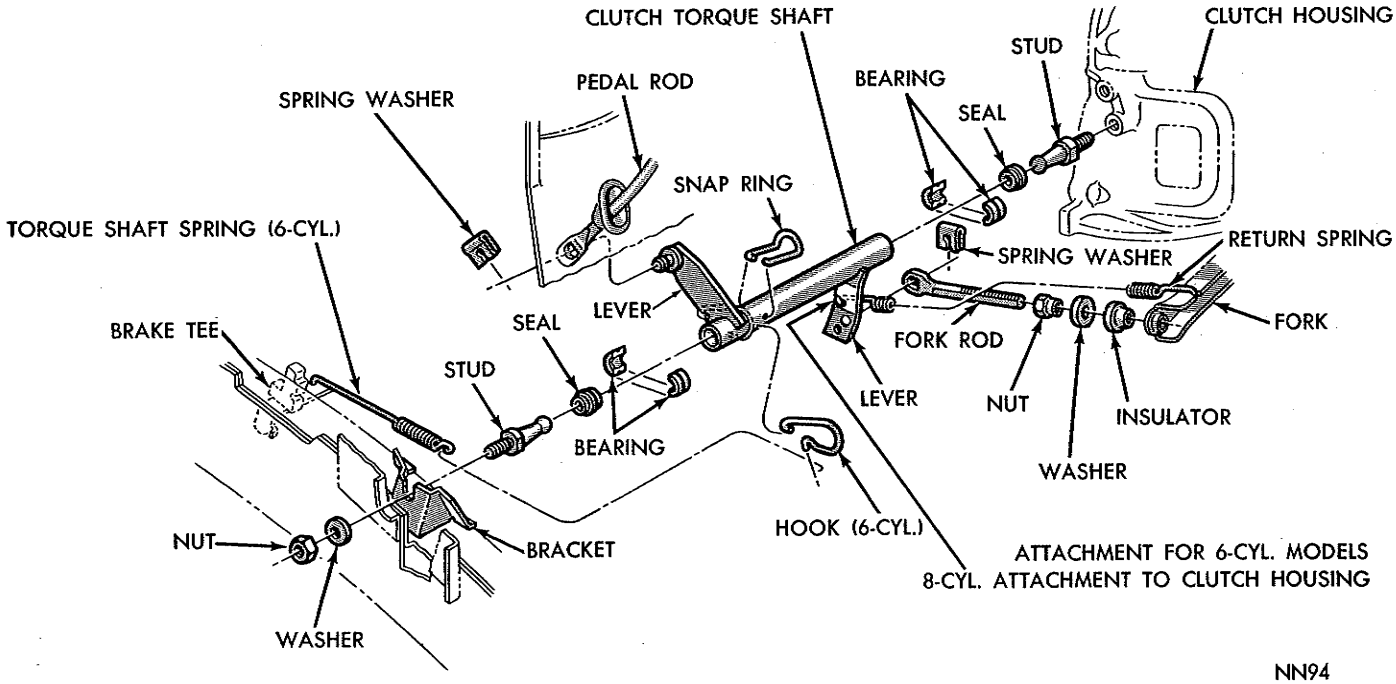


***Fig. 6—Clutch Torque Shaft and Linkage (Belvedere 6 and 8 Cyl. Models)***

MyMopar.com

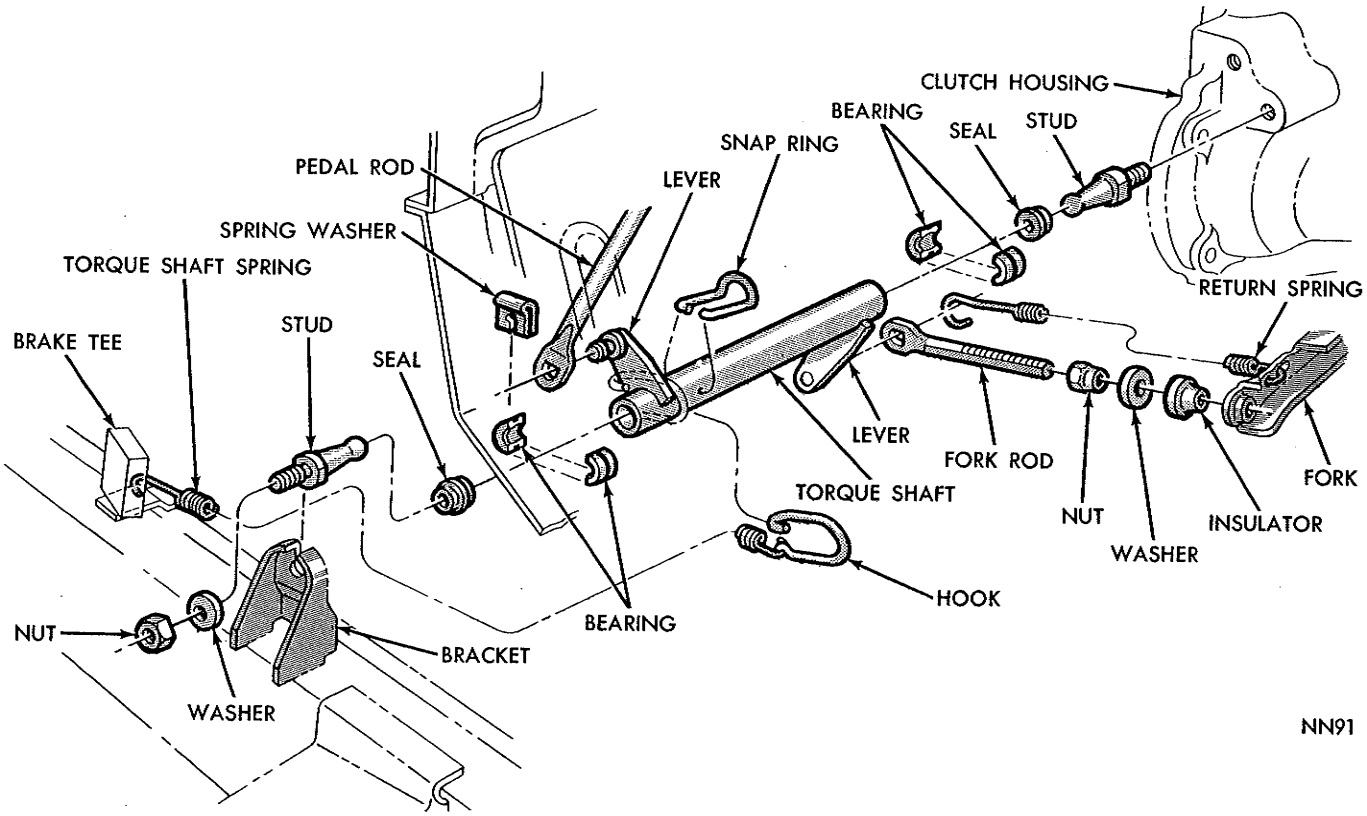


***Fig. 7—Clutch Torque Shaft and Linkage (Fury 6 Cyl. Models)***

(6) Loosen and back off clutch cover attaching bolts, one or two turns at a time, in succession, to avoid bending the cover flange.

(7) Remove clutch assembly and disc from clutch housing.

**CAUTION: Handle clutch and disc carefully to avoid contaminating the friction surfaces.**

### *Cleaning and Inspection*

(1) Use compressed air to clean dust out of the clutch housing. Inspect for leakage through the engine rear main bearing oil seal. If leakage is noted, it should be corrected at this time.

(2) The friction face of flywheel should have a uniform appearance throughout the entire clutch contact area. If there is evidence of heavy contact on one portion of the wear circle and a very light contact 180° from that portion, the flywheel may be improperly mounted or sprung. In such cases, a dial indicator, mounted on clutch housing with plunger in contact with the wear circle, should show no more than .003 inch runout throughout a complete rotation of flywheel.

(3) The friction face of the flywheel should also be free from discolored, burned areas, small cracks and excessive grooves or ridges.

(4) The bushing in end of crankshaft should be smooth and show no excessive wear. A new transmission main drive pinion or C-3181 Bushing Installing and Burnishing Tool can be used to gauge the size of the bushing. The tool should have a snug fit in bushing.

If necessary to replace the bushing, proceed as detailed under "Crankshaft Transmission Drive Pinion Bushing," page 7.

(5) The end of the transmission main drive pinion should be smooth and bright, without grooves and ridges.

(6) The disc assembly should be handled without touching the facings. Replace disc if facings show evidence of grease or oil soakage or wear to within less than 1/32 inch of the rivet heads. The hub splines and splines on transmission main drive pinion should be a snug fit without signs of excessive wear. The metallic portions of the assembly should be dry and clean and should show no evidence of having been hot. Each of the arched springs between facings should be unbroken and all rivets should be tight.

(7) Wipe friction surface of pressure plate with kerosene, mineral spirits or other similar solvent.

(8) Using a surface plate, test the cover for flatness. All sections around attaching bolt holes should be in contact with the surface plate within .015 inch.

The cover should be a snug fit on the pressure plate lugs, in the marked location.

MyMopar.com

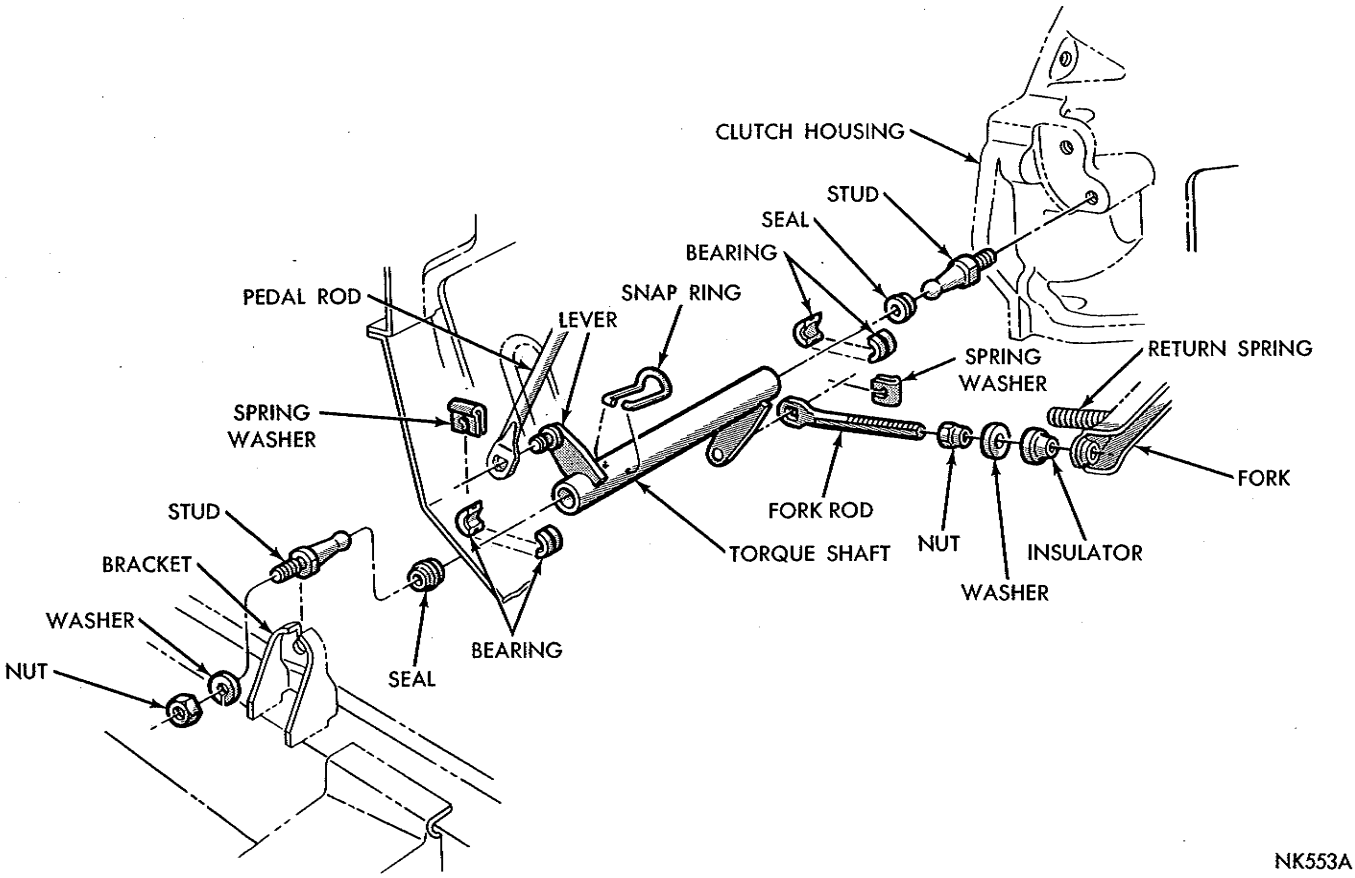


***Fig. 8—Clutch Torque Shaft and Linkage (Fury 8 Cyl. Models)***

The pressure plate friction area should be flat within .005 inch and should be free from discolored, burned areas, cracks, grooves or ridges.

(9) Inner ends of release levers should have a uniform wear pattern.

If the clutch assembly does not meet these requirements, it should be replaced.

(10) Examine condition of clutch release bearing.

**CAUTION: The clutch release bearing is a prelubricated sealed thrust bearing and should not be immersed in solvent.**

The bearing should turn freely, when held in the hands, under light thrust load, with no evidence of roughness.

(11) If bearing is noisy, rough or dry, install a new one on the sleeve as detailed under "Clutch Release Bearing," page 8.

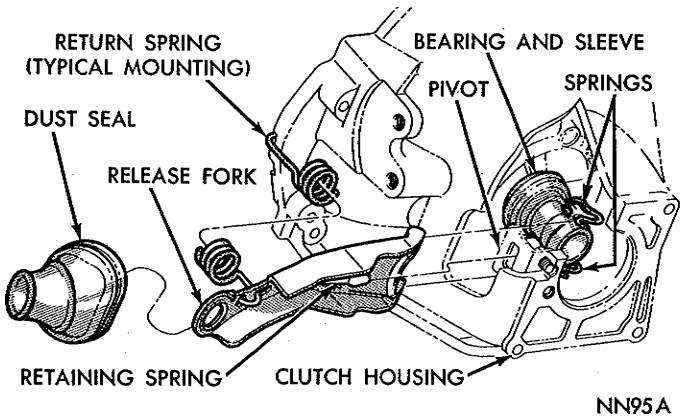


***Fig. 9—Clutch Release Fork, Bearing and Sleeve***

## *Installation*

(1) Lubricate drive pinion bushing in end of crankshaft with about a half teaspoon of special long-life chassis grease or Multi-Mileage Lubricant, Part Number 2525035. Place the lubricant in the radius at the

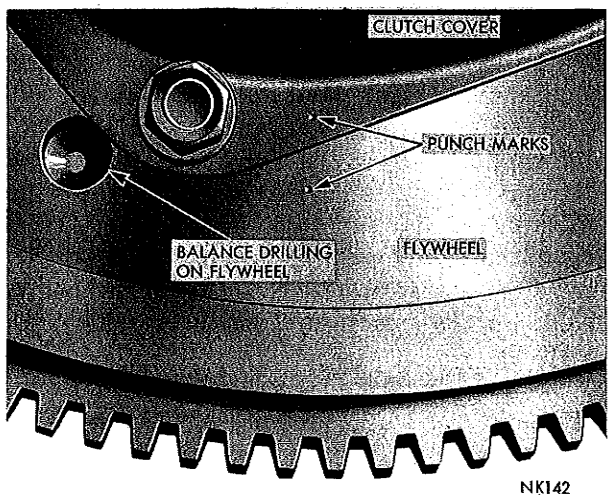


***Fig. 10—Punch Marks on Clutch Cover and Flywheel***

MyMopar.com

back of the bushing.

(2) Clean the surfaces of the flywheel and pressure plate thoroughly, with fine sandpaper or crocus cloth, making certain that all oil or grease has been removed.

(3) Hold clutch disc, pressure plate and cover in mounting position, with the springs on the disc damper facing away from the flywheel. **Do not touch disc facing, as clutch chatter may result.** Insert C-360 Clutch Disc Aligning Tool through hub of disc and into the bushing (Fig. 11). If Tool C-360 is not available, use a spare transmission drive pinion.

(4) Insert clutch cover attaching bolts (after aligning balance punch marks) but do not draw down (Fig. 9).

(5) To avoid distortion of the clutch cover, the bolts should be tightened a few turns at a time (alternately) until they are all tight. Tighten 5/16 inch bolts to 15 foot-pounds, ⅜ inch, 30 foot-pounds. Remove Tool C-360 (or drive pinion if used).

(6) Fill cavity of bearing sleeve with Multi-Mileage Lubricant, Part Number 2525035, or Automotive Multi-Purpose Grease, NLGI grade 2. Also, apply a film of this same lubricant to the lugs of the sleeve.

(7) Position release bearing and sleeve in clutch housing as far forward as it will go.

(8) Lubricate fork fingers and retaining spring, at the pivot contact area, with a film of Multi-Mileage Lubricant, Part Number 2525035, or Automotive Multi-Purpose Grease, NLGI grade 2 (Fig. 9).

(9) Engage release fork fingers under clutch sleeve retaining springs. **Be sure retaining springs on sleeve have lateral freedom** (Fig. 9).

(10) Be sure groove in dust seal is engaged on seal opening flange in clutch housing.

(11) Assemble end of clutch release rod in fork (Fig. 5, 6, 7 or 8).

(12) Install release fork return spring. On Belvedere and Fury 6-cylinder models, also, install the torque shaft spring (Fig. 6 or 7).

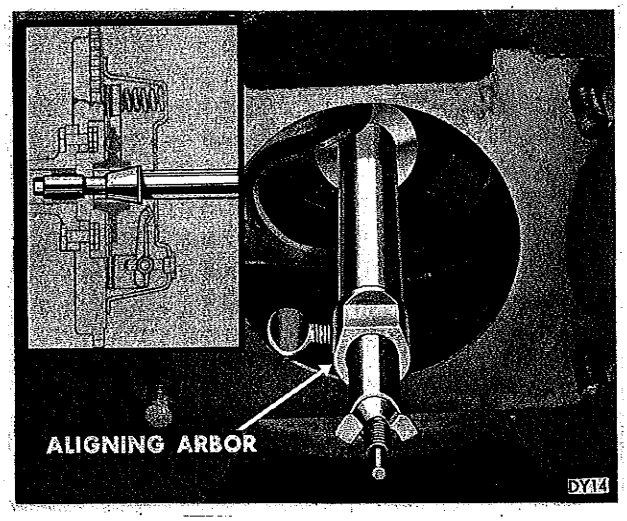


*Fig. 11—Clutch Disc Aligning Arbor*

**CAUTION: When installing transmission, do not lubricate splines or pilot end of transmission drive pinion. These areas must be kept dry.**

(13) Install C-730 Pilot Studs in clutch housing and install transmission as detailed in "Transmission Installation," Group 21.

(14) Adjust clutch linkage as detailed under "Adjusting Clutch Pedal Free Play," page 3.

## CRANKSHAFT TRANSMISSION DRIVE PINION BUSHING

See Paragraph "Clutch Cleaning and Inspection," page 5, for testing the size of the pilot bushing.

### *Removal*

(1) Position outer position of C-3185 Bushing Remover Tool in contact with the button on the end of the center screw.

(2) Thread outer portion of tool tightly into bushing.

(3) Turn center screw in through the outer portion to remove bushing.

### *Installation*

(1) Soak a new bushing in engine oil prior to installation.

(2) Remove nut and cup from C-3181 Installing and Burnishing Tool.

(3) Place the new bushing on the tool shaft and drive bushing flush with the end of the crankshaft. **Use a soft hammer to prevent damage to the tool.**

(4) To remove installer, install cup and nut. As nut is tightened, tool will burnish the bushing.

(5) Insert ½ teaspoon of special long-life chassis grease or Multi-Mileage Lubricant, Part Number 2525035, ahead of the bushing.

## CLUTCH RELEASE FORK

### *Removal*

(1) Disconnect clutch fork return spring (Fig. 5, 6, 7 or 8).

(2) Disconnect clutch release rod from clutch fork (Fig. 5, 6, 7 or 8).

(3) Pry dust seal out of clutch housing and remove from clutch fork (Fig. 9).

(4) Grasp outer end of clutch fork and pull fork out and free of retaining springs and off knife edge pivot (Fig. 9). **The clutch fork has a riveted flat retaining spring that is engaged in a hole of the pivot. The clutch release fork pivot is an 'L' shaped bracket bolted inside the clutch housing.**

(5) Remove clutch fork from clutch housing.

### *Installation*

(1) Apply Multi-Mileage Lubricant, Part Number 2525035, or Automotive Multi-Purpose Grease, NLGI grade 2, to the pivot edge and hole of pivot (Fig. 9).

MyMopar.com

(2) Lubricate contact areas at end of clutch fork with Multi-Mileage Lubricant, or Automotive Multi-Purpose Grease, NLGI grade 2.

(3) Install clutch release fork in housing, being careful to engage the flat retaining spring in the hole of the pivot and under retaining springs of bearing sleeve.

(4) Install dust seal over release fork and engage the groove of the seal in the clutch housing.

(5) Attach clutch release rod and install return spring.

(6) Adjust clutch linkage as described under "Adjusting Clutch Pedal Free Play," page 3.

## CLUTCH RELEASE BEARING (Removed from Clutch)

### Removal

(1) Examine condition of bearing. If noisy, rough or dry under light thrust load, remove bearing from sleeve.

(2) Support bearing and sleeve in a vise or press and carefully press out sleeve.

(3) Clean sleeve in solvent and remove all old lubricant.

### Assembly

**CAUTION: Exercise care when installing a new clutch release bearing to avoid damaging the bearing race. Never drive the bearing on the sleeve with a hammer. Use either of the following two methods.**

### Vise Method

(1) Position new bearing on sleeve and place old bearing against face of new bearing.

(2) Support parts in a vise and carefully press new bearing on sleeve (Fig. 12). **Make certain bearing is seated on shoulder of bearing sleeve. Rotate bearings as they are pressed together.**

### Press Method

(1) Support sleeve on press bed.

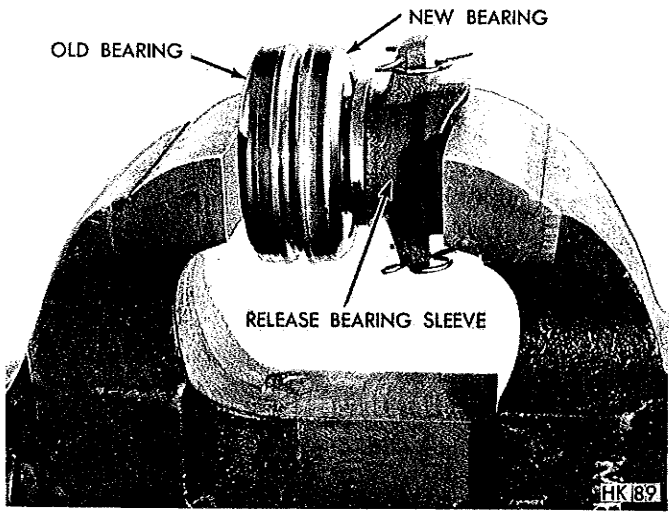


*Fig. 12—Installing Clutch Release Bearing on Sleeve*

(2) Position new bearing on sleeve and place old bearing on new one.

(3) Bring press ram into contact with old bearing and apply sufficient pressure to **seat new bearing against shoulder of sleeve. Rotate bearings as they are pressed together.**

### Lubrication

(1) Fill cavity of bearing sleeve with Multi-Mileage Lubricant, Part Number 2525035, or Automotive Multi-Purpose Grease, NLG1 grade 2.

(2) Also, apply a film of this same lubricant to the fork lugs on the sleeve.

(3) Apply a film of Multi-Mileage Lubricant, Part Number 2525035, or Automotive Multi-Purpose Grease, NLG1 Grade 2, to pivot contact area of fork retaining spring.

### Installation

(1) Install bearing and sleeve into position, engaging the fork under the sleeve springs (Fig. 9).

**NOTE: Be sure springs have lateral freedom.**

**CAUTION: When installing transmission, do not lubricate splines or pilot end of transmission drive pinion. These areas must be kept dry.**

(2) Install C-730 Pilot Studs in clutch housing and install transmission as detailed in "Transmission Installation," Group 21.

(3) Adjust clutch linkage as detailed in "Adjusting Clutch Pedal Free Play," Page 3.

## TORQUE SHAFT AND BEARINGS

### Removal

(1) Remove pedal rod spring washer and pedal rod from torque shaft lever (Fig. 5, 6, 7 or 8).

(2) Remove clutch release fork return spring (Fig. 5, 6 or 7). **On Belvedere and Fury 6-cylinder models, also disconnect torque shaft spring at torque shaft (Fig. 6 or 7).**

(3) Remove clutch release rod spring washer and release rod from torque shaft lever (Fig. 5, 6, 7 or 8).

(4) Remove clutch release rod from fork.

(5) On Valiant models, remove two screws attaching torque shaft end bracket to clutch housing (Fig. 5). **On Belvedere and Fury models, remove torque shaft stud from clutch housing (Fig. 6, 7 or 8).**

(6) On Valiant models, remove three screws attaching torque shaft end bracket to side shield (Fig. 5). **On Belvedere and Fury models, remove torque shaft stud nut and washer at frame end (Fig. 6, 7 or 8).**

(7) Remove torque shaft assembly from vehicles.

### Cleaning and Inspection

(1) Clean all parts in kerosene, mineral spirits or other suitable solvent. Remove all grease from inside of torque shaft.

(2) The two ball studs should be bright and without scratches, ridges or other surface imperfections.

MyMopar.com

(3) The inner surfaces of bearings should also be smooth, without surface scratches or embedded foreign material. The wear pattern should be uniform over the entire surface.

(4) Replace worn or cracked rubber seals.

### Installation

(1) Install new seals on ball studs of torque shaft end brackets on Valiant models and on ball studs on Belvedere and Fury models (Fig. 5, 6, 7 or 8).

(2) Coat counterbored ends of torque shaft, bearings and ball studs with Multi-Mileage Lubricant, Part Number 2525035, or Automotive Multipurpose Grease, NLGI grade 2.

(3) Install bearings on frame end bracket ball stud on Valiant models or the ball stud on Belvedere and Fury models, and force bearings into torque shaft far enough to install snap ring (Fig. 5, 6, 7 or 8).

(4) On Valiant models, position torque shaft end bracket on clutch housing and attach with two screws (Fig. 5). Tighten screws to 30 foot-pounds. On Belvedere and Fury models, install torque shaft stud in clutch housing (Fig. 6 or 7) and tighten to 40 foot-pounds.

(5) Install bearings on ball stud (Fig. 5, 6, 7 or 8) and force torque shaft over bearings and studs.

(6) On Valiant models, position torque shaft and bracket on side shield and attach with three screws (Fig. 5). Tighten screws to 200 inch-pounds. On Belvedere and Fury models, position stud and torque shaft in slotted frame bracket (Fig. 6, 7 or 8). Install lockwasher and nut on stud and tighten to 40 foot-pounds.

(7) Install clutch release rod in end of fork (Fig. 5, 6, 7 or 8).

(8) Connect opposite end of release rod to torque shaft and secure with spring washer.

(9) Connect pedal rod to torque shaft and secure with spring washer (Fig. 5, 6, 7 or 8).

(10) Install fork return spring. **On Belvedere and Fury 6-cylinder models, install torque shaft spring (Fig. 6 or 7).**

(11) Adjust clutch linkage as detailed on page 3.

## CLUTCH HOUSING ALIGNMENT

When performing adjustments or repairs that involve removing the clutch housing, it will be necessary to align the face of the housing parallel with that of the block when assembling.

### Bore Runout

To correctly align the clutch housing, proceed as follows:

(1) Mount C-870 Aligning Bar Tool with C-435 Dial Indicator on flywheel (Fig. 13).

(2) With C-771 Flywheel Turning Tool turn the flywheel while noting dial indicator needle deflection. Out-of-round of bore must not exceed .008 inch (maximum) total indicator reading.

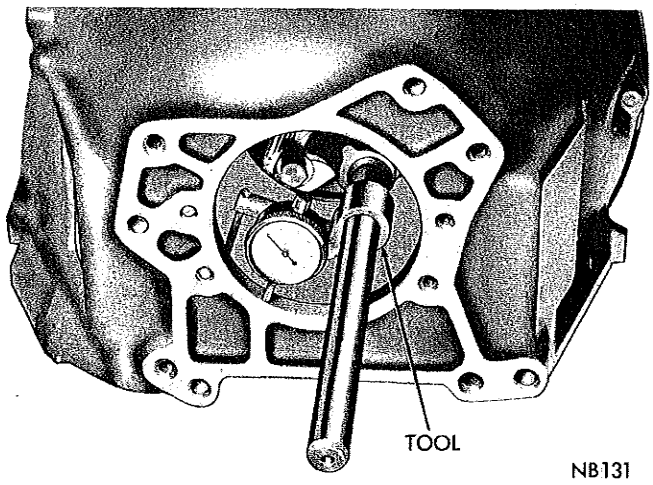


*Fig. 13—Measuring Clutch Housing Bore Runout*

If bore runout is in excess of .008 inch total indicator reading, proceed with correction as follows:

To illustrate the recommended correction procedure, assume that the total indicator reading is .020 inch, in a direction which approximates 2 o'clock on engine block (Fig. 14 or 15 depending on model).

In this case, the housing is off crankshaft centerline .010 inch (one-half total indicator reading) which is .006 inch greater than the allowable limit of .004 inch (one-half total indicator reading).

In the case under consideration, use of the .007 inch offset dowels (pair) will bring runout well within the allowable limits of .008 inch or .008 inch minus .007 inch (offset dowels) which equals .001 inch runout. Dowels must be used in pairs (same part number).

(3) To install the dowel pins (pair), remove the clutch housing, after disconnecting and removing the starting motor. Remove dowel pins from the engine block. Select eccentric dowels (pair) which are available with the following amount of offset: .007″ (No. 173647), .014″ (No. 1736348), .021″ (No. 1736353).

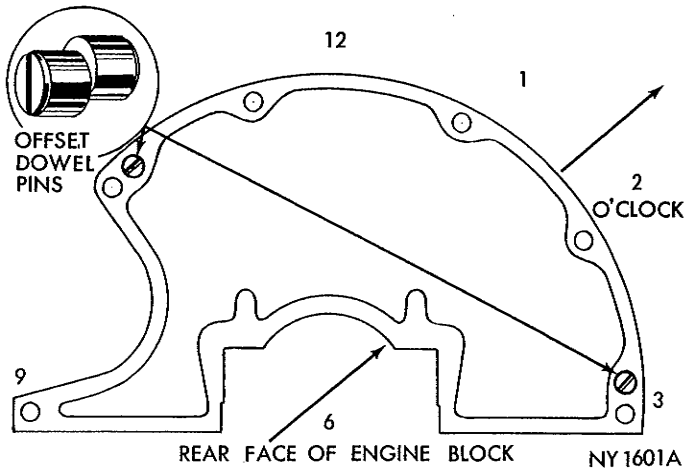


*Fig. 14—Offset Dowel Diagram (6 Cyl.)*

MyMopar.com

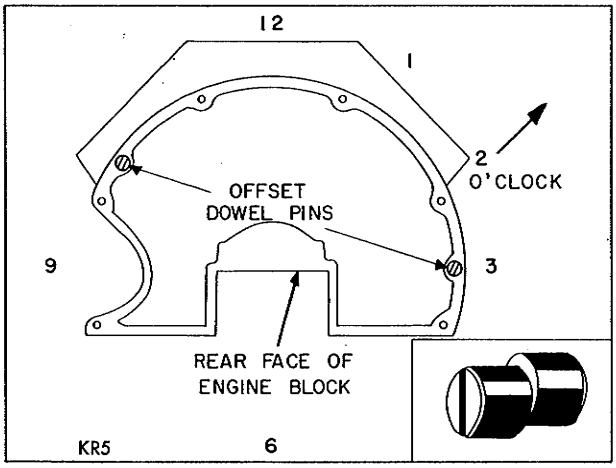


*Fig. 15—Offset Dowel Diagram (8 Cyl.)*

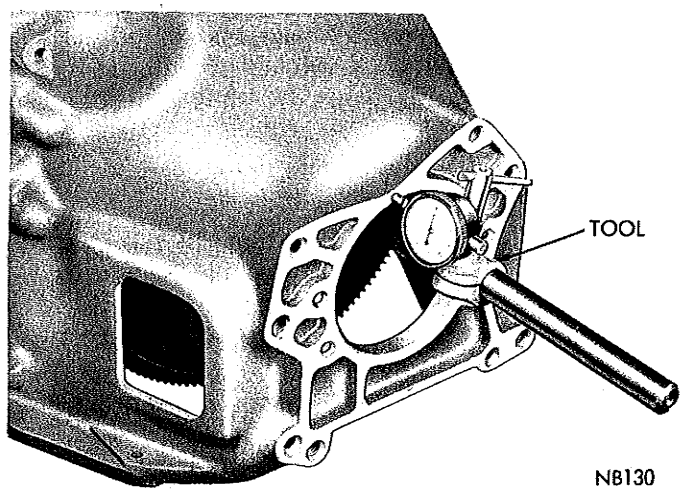


*Fig. 16—Measuring Clutch Housing Face Runout*

The amount of eccentricity of the dowel will produce a total indicator reading change of double the dowel eccentricity, therefore, select a pair of dowels with the nearest to one-half of the total indicator runout of the bore. For runout (total indicator reading) of .012″ through .020″, use a .007″ dowel (No. 1736347), .022″ through .034″, use .014″ dowel (No. 1736348), and .036″ through .052″, use .021″ dowel (No. 1736353).

(4) Install both dowels with the slots parallel and aligned in the direction to correct the bore runout. (Slot indicates the direction of maximum dowel eccentricity.) Both dowels must be inserted into engine block, up to the off-set shoulder.

(5) Install and tighten 7/16″ clutch housing bolts to 50 foot-pounds. Remount dial indicator and remeasure bore runout. Small corrections can be made by removing the clutch housing (if necessary) and turning the dowels with a screwdriver to shift the housing and bring the bore within limits.

### *Face Runout*

(1) Relocate the Dial Indicator (Fig. 16) and rotate the flywheel, using Tool C-771. If total indicator reading is greater than .006 inch, note the amount of total indicator reading and the location of the lowest indicator reading (i.e., the point where the indicator arm or follower is extended the furthest).

(2) To correct excessive runout, place proper thickness of shim stock between the clutch housing and engine block or between transmission and clutch housing. After remeasuring face runout, tighten housing bolts to 50 foot-pounds.

(3) Install clutch release bearing, fork, linkage and transmission. Adjust clutch linkage.

## STEAM CLEANING PRECAUTIONS

Since the clutch housing has provisions for ventilation, condensation from steam vapors tend to accumulate on the internal clutch mechanism when the vehicle is steam cleaned. The facings of the disc will absorb moisture, and the force exerted by the pressure plate will bond the facings to the flywheel and/or, the pressure plate, if the car is allowed to stand for some time before use. If this condition occurs, it will necessitate replacement of the disc assembly, flywheel and/or clutch assembly. **Immediately after the cleaning operation, start engine and "slip the clutch" in order to dry off the disc assembly, pressure plate, and/or flywheel.**

# SPECIFICATIONS

## VALIANT, BELVEDERE, FURY

| | | | | |
|---|---|---|---|---|
| CLUTCH | | | | |
| Make | Borg & Beck | Auburn | Borg & Beck | Auburn |
| Model | 1574 | 100342-1 | 1669 | 100342-2 |
| Type | Dry Disc | Dry Disc | Dry Disc | Dry Disc |
| Model Application | Valiant | Valiant | Valiant, | Fury |
| Usage with Engine Size | Std. 170 cu. in. | Std. 170 cu. in. | Spec 170 cu. in. Valiant, Belvedere, Fury Std. 225 cu. in. | Spec. 170 cu. in. Valiant, Belvedere, Fury Std. 225 Cu. in. |
| CLUTCH DISC | | | | |
| Facing Type | Molded Woven | Molded Woven | Molded Woven | Molded Woven |

MyMopar.com

| | | | | |
|---|---|---|---|---|
| Facing Material | Asbestos | Asbestos | Asbestos | Asbestos |
| Outside Diameter | 9⅛" | 9⅛" | 9¼" | 9¼" |
| Thickness | .125" | .114" | .125" | .114" |
| Disc Springs | 4 | 4 | 6 | Closed |
| Spring Color | Chartreuse | Orange | Light Blue | |
| **CLUTCH COVER** | | | | |
| Pressure Springs | 6 | 3 | 6 | 3 |
| Spring Color | 3-White 3-No Color | Black | Red | Red Stripe |
| Pedal Free Play (at fork end) | 5/32" | 5/32" | 5/32" | 5/32" |

## VALIANT, BELVEDERE, FURY

| | | | | |
|---|---|---|---|---|
| **CLUTCH** | | | | |
| Make | Borg & Beck | Borg & Beck | Auburn | Borg & Beck |
| Model | 1649 | 1576 | 100390 | 1678 |
| Type | Dry Disc | Dry Disc | Dry Disc | Dry Disc |
| Model Application | Belvedere, Fury | Belvedere | Valiant | Belvedere |
| Usage with Engine Size | Taxi 225 cu. in. | Police 225 cu. in. | Std. 273 cu. in. | Std. 273 cu. in. |
| **CLUTCH DISC** | | | | |
| Facing Type | Molded Woven | Molded Woven | Molded Woven | Molded Woven |
| Facing Material | Asbestos | Asbestos | Asbestos | Asbestos |
| Outside Diameter | 11" | 10" | 9½" | 10" |
| Thickness | .135" | .125/.135" | .114" | .125" |
| Disc Springs | 6 | 6 | Closed | 10 |
| Spring Color | Blue | 4 Pink 2 White | | 5 Black 5 Red |
| **CLUTCH COVER** | | | | |
| Pressure Springs | 9 | 9 | 3 | 9 |
| Spring Color | 6 No Color 3 White | White | Green | 6 Black 3 Lavender |
| Pedal Free Play (at fork end) | 5/32" | 5/32" | 5/32" | 5/32" |

## BELVEDERE, FURY

| | | | | |
|---|---|---|---|---|
| **CLUTCH** | | | | |
| Make | Borg & Beck | Borg & Beck | Borg & Beck | Borg & Beck |
| Model | 1506 | 1505 | 1647 | 1718 |
| Type | Dry Disc | Dry Disc | Dry Disc | Dry Disc |
| Model Application | Belvedere | Fury | Belvedere, Fury | Belvedere |
| Usage with Engine Size | Spec. 273 cu. in. Std. 318, 361 cu. in. Fury Spec. 318 cu. in. | Std. 318 cu. in. | Std. 383, 426 cu. in. | Max. Perf. 426 cu. in. Max Perf.—11:1 and 12.5:1 C.R. |
| **CLUTCH DISC** | | | | |
| Facing Type | Molded Woven | Molded Woven | Molded Woven | Molded Woven |
| Facing Material | Asbestos | Asbestos | Asbestos | Asbestos |
| Outside Diameter | 10½" | 10" | 10½" | 10½" |
| Thickness | .125" | .125" | .125" | .135" |
| Disc Springs | 10 | 10 | 10 | 5 |
| Spring Color | 5 Green 5 Tan | 5 Black 5 Red | 5 Green 5 Tan | No Color |
| **CLUTCH COVER** | | | | |
| Pressure Springs | 9 | 9 | 12 | 12 |
| Spring Color | 3 White 6 No Color | No Color | 6 White 6 Tan | White |
| Pedal Free Play (at fork end) | 5/32" | 5/32" | 5/32" | 5/32" |

# TIGHTENING REFERENCE

| | POUNDS FOOT | POUNDS INCH |
|---|---|---|
| Clutch Housing to Engine Bolts | 30 | |
| Clutch Cover to Flywheel Bolts (5/16") | 15 | |
| Clutch Cover to Flywheel Bolts (⅜") | 30 | |
| Clutch Pan Bolts | | 100 |
| Clutch Fork Pivot Bolts | | 200 |
| Flywheel Screws | 55 | |
| Transmission to Clutch Housing Bolts | 50 | |
| Torque Shaft Stud bracket Bolts (engine side) | 30 | |
| Torque Shaft Stud Bracket Bolts (frame side) | | 200 |
| Torque Shaft Stud | 40 | |

MyMopar.com

MyMopar.com

# COOLING SYSTEM

## CONTENTS


| | Page | | Page |
|---|---|---|---|
| GENERAL INFORMATION | 1 | SPECIFICATIONS | 11 |
| SERVICE DIAGNOSIS | 1 | TIGHTENING REFERENCE | 13 |
| SERVICE PROCEDURES | 3 | | |


## GENERAL INFORMATION

In order to provide satisfactory protection for the wide variety of corporation models the cooling system of each must be tailored to specific needs. To do this effectively the Corporation offers three basic systems:

1. Standard
2. Air Conditioning
3. High Capacity

The standard system consists of a tube and spacer type radiator, 14 psi radiator pressure cap, centrifugal water pump, 180°F. thermostat, and a four, six or seven blade fan (Fig. 1). See specifications for application.

The cooling system for air conditioned vehicles generally requires a greater capacity radiator along with a fan shroud, 16 psi radiator pressure cap, special centrifugal water pump, larger fan, and thermostatically controlled fan drive (in some installations). See specifications for applications.

The high capacity system, clean air package equipped and trailer towing package, available as optional equipment to the standard vehicle, is a combination of the standard and air conditioning systems as necessary to provide protection against overheating for unusually severe operation requirements.

For internal cooling system protection each cooling system is factory equipped with sufficient permanent type anti-freeze for —20°F. protection. It is recommended that the coolant be changed annually to insure adequate anti-freeze and corrosion protection. In areas where anti-freeze is not required, MOPAR rust inhibitor or equivalent must be added to the water coolant for normal corrosion protection. Air conditioned vehicles require year round protection with permanent type anti-freeze with a minimum of +15°F. protection for summer operation and additional anti-freeze in the winter according to the prevailing temperatures.

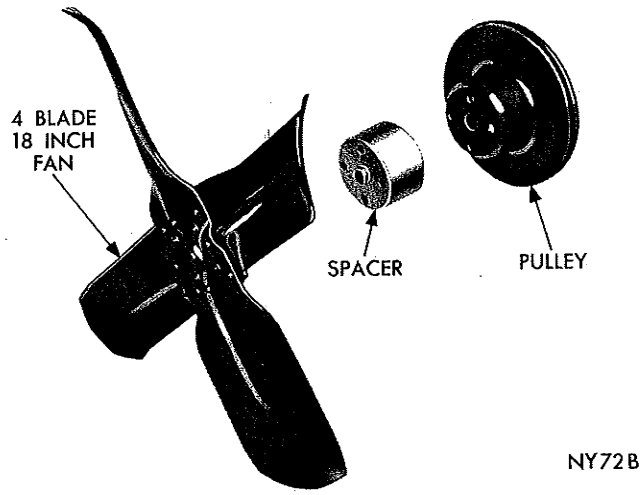


***Fig. 1—Standard Fan Drive***

## SERVICE DIAGNOSIS

| Condition | Possible Cause | Correction |
|---|---|---|
| EXTERNAL LEAKAGE | (a) Loose hose clamp. | (a) Replace the hose clamp. |
| | (b) Hose Leaking. | (b) Replace the hose. |
| | (c) Leaking radiator. | (c) Repair or replace the radiator as necessary. |
| | (d) Worn or damaged water pump seal. | (d) Replace the water pump seal and impeller. |
| | (e) Loose core hole plug. | (e) Install new core hole plug. |
| | (f) Damaged gasket, or dry gasket, if engine has been stored. | (f) Replace gaskets as necessary. |
| | (g) Cylinder head bolts loose, or tightened unevenly. | (g) Replace the cylinder head gasket and torque head in correct sequence. |
| | (h) Leak at heater connection. | (h) Clean the heater connections and replace the hoses and clamps if necessary. |
| | (i) Leak at water temperature sending unit. | (i) Tighten the water temperature sending unit. |
| | (j) Leak at water pump attaching bolt. | (j) Tighten the water pump attaching |

MyMopar.com

| Condition | Possible Cause | Correction |
|---|---|---|
| | | bolts 30 foot-pounds. |
| | (k) Leak or exhaust manifold stud. | (k) Seal and re-drive the stud. |
| | (l) Cracked thermostat housing. | (l) Replace the thermostat housing. |
| | (m) Dented radiator inlet or outlet tube. | (m) Straighten the radiator inlet or outlet tube as necessary. |
| | (n) Leaking heater core. | (n) Repair or replace the heater core. |
| | (o) Cracked or porous water pump housing. | (o) Replace the water pump assembly. |
| | (p) Warped or cracked cylinder head. | (p) Replace the cylinder head. |
| | (q) Cracked cylinder block. | (q) Replace the cylinder block. |
| | (r) Sand holes or porous condition in block or head. | (r) Replace the cylinder block or cylinder head as necessary. |
| | (s) Faulty pressure cap. | (s) Replace pressure cap. |
| | (t) Loose or stripped oil cooler fittings. | (t) Tighten or replace as necessary. |
| **INTERNAL LEAKAGE** | (a) Faulty head gasket. | (a) Install a new head gasket. |
| | (b) Refer to causes (f), (g), (p), (q), (r) and (t) listed under External Leakage. | (b) Refer to corrections (f), (g), (p), (q), (r) and (t) listed under External Leakage. |
| | (c) Crack in head into valve compartment. | (c) Pressure test cooling system, replace the cylinder head. |
| | (d) Cracked valve port. | (d) Pressure test cooling system, replace the cylinder head. |
| | (e) Crack in block into push rod compartment. | (e) Pressure test cooling system, replace the cylinder block. |
| | (f) Cracked cylinder wall. | (f) Pressure test cooling system, replace the cylinder block. |
| | (g) Leaking oil cooler. | (g) Repair or replace the oil cooler. |
| **POOR CIRCULATION** | (a) Low coolant level. | (a) Fill radiator to correct level. |
| | (b) Collapsed radiator hose. (A bottom hose with faulty spring may collapse only at medium or high engine speeds.) | (b) Replace the hose and spring. |
| | (c) Fan belt loose, glazed or oil soaked. | (c) Tighten or replace the fan belt as necessary. |
| | (d) Air leak through bottom hose. | (d) Reposition hose clamps or replace the hose. Check radiator outlets for dents or out-of-round. |
| | (e) Faulty thermostat. | (e) Replace the thermostat. |
| | (f) Water pump impeller broken or loose on shaft. | (f) Replace the water pump impeller assembly. |
| | (g) Restricted radiator core water passages. | (g) Flush the radiator thoroughly or rod out if necessary. |
| | (h) Restricted engine water jacket. | (h) Flush the engine cooling system thoroughly. |
| **OVERHEATING (Refer to Causes and Corrections Listed Under "Poor Circulation")** | (a) Low coolant level. | (a) Fill radiator to proper level. |
| | (b) Blocked radiator air passages. | (b) Blow out the radiator air passages. |
| | (c) Incorrect ignition timing. | (c) Time the engine ignition system. |
| | (d) Low engine oil level. | (d) Add engine oil to the correct level. |
| | (e) Incorrect valve timing. | (e) Correct the engine valve timing. |
| | (f) Inaccurate temperature gauge. | (f) Replace the temperature gauge. |
| | (g) Restricted overflow tube. | (g) Remove restriction from the overflow tube. |
| | (h) Faulty radiator pressure cap or seat. | (h) Replace the radiator cap. Clean or replace seat. |
| | (i) Frozen heat control valve. | (i) Free up the manifold heat control valve. |
| | (j) Dragging brakes. | (j) Adjust the brakes. |
| | (k) Excessive engine idling. | (k) Set at faster idle or stop engine. |
| | (l) Frozen coolant. | (i) Thaw out cooling system, add anti-freeze as required. |
| | (m) Faulty fan drive unit. | (m) Replace the fan drive unit. |
| | (n) Faulty temperature sending unit. | (n) Replace the sending unit. |

MyMopar.com

| Condition | Possible Cause | Correction |
|---|---|---|
| **OVERFLOW LOSS (Refer to causes listed under "Poor Circulation and Overheating.")** | (a) Overfilling.<br>(b) Coolant foaming due to insufficient corrosion inhibitor.<br>(c) Blow head gasket.<br>(d) Broken or shifted lower hose spring. | (a) Adjust coolant to the correct level.<br>(b) Flush the radiator and add antifreeze or rust inhibitor as required.<br>(c) Replace the head gasket.<br>(d) Replace lower hose. |
| **CORROSION** | (a) Use of water containing large concentration of lime and minerals.<br>(b) Low coolant level.<br>(c) Insufficient corrosion inhibitor.<br>(d) Use of antifreeze for extended length of time.<br>(e) Failure to use corrosion inhibitor in summer.<br>(f) Air leak at bottom radiator hose. | (a) Use only clean soft water with inhibitor.<br>(b) Fill the cooling system to the correct level.<br>(c) Use antifreeze or rust inhibitor as required.<br>(d) Drain and flush cooling system and replace with new antifreeze.<br>(e) Flush radiator and refill with clean soft water and rust inhibitor.<br>(f) Reposition hose clamps or replace the hose and/or clamps. |
| **TEMPERATURE TOO LOW—SLOW ENGINE WARM UP** | (a) Faulty thermostat.<br>(b) Inaccurate temperature gauge.<br>(c) Faulty temperature sending unit. | (a) Replace the thermostat.<br>(b) Replace the temperature gauge.<br>(c) Replace the sending unit. |
| **WATER PUMP NOISY** | (a) Seal noisy.<br>(b) Bearing corroded. | (a) Add water pump lube.<br>(b) Replace bearing seal and impeller. |

## ACCESSORY DRIVE BELT

| | | |
|---|---|---|
| **INSUFFICIENT ACCESSORY OUTPUT DUE TO BELT SLIPPAGE** | (a) Belt too loose.<br>(b) Belt excessively glazed or worn. | (a) Adjust belt tension.<br>(b) Replace and tighten as specified. |
| **BELT SQUEAL WHEN ACCELERATING ENGINE** | (a) Belts too loose.<br>(b) Belts glazed. | (a) Adjust belt tensions.<br>(b) Replace belts. |
| **BELT SQUEAK AT IDLE** | (a) Belt too loose.<br>(b) Dirt and paint imbedded in belt.<br>(c) Non-uniform belt.<br>(d) Misaligned pulleys.<br>(e) Non-uniform groove or eccentric pulley. | (a) Adjust belt tension.<br>(b) Replace belt.<br>(c) Replace belt.<br>(d) Align accessories (file brackets or use spacers as required).<br>(e) Replace pulley. |
| **BELT ROLLED OVER IN GROOVE** | (a) Broken cord in belt.<br>(b) Belts not matched (A/C). | (a) Replace belt.<br>(b) Install matched belts. |
| **BELT JUMPS OFF** | (a) Belt too loose.<br>(b) Belts not matched (A/C).<br>(c) Misaligned pulleys. | (a) Adjust belt tension.<br>(b) Install matching belts.<br>(c) Align accessories. |

## SERVICE PROCEDURES

### FAN

There are no repairs to be made on the fan. If the fan is bent or damaged it should be replaced.

#### *Removal*

Remove the upper half of the shroud (if so equipped). Loosen the fan belt and remove the four bolts attaching the fan to its pulley. On models so equipped, the fluid fan drive unit must be removed with the fan.

#### *Installation*

Use the correct spacer, if required, so that clearance between the fan blades and the radiator is from ¾ inch to 1¼ inches. Install the upper half of the shroud on vehicles so equipped. Tighten the fan belt as outlined in "Accessory Belt Drives."

### FLUID FAN DRIVES

#### *Torque Control Drive*

The Torque Control Drive (Fig. 2) is a silicone fluid filled coupling connecting the fan to the fan pulley. The unit allows the fan to be driven in a normal manner at slow vehicle speeds while limiting the top speed of the fan to a pre-determined level.

MyMopar.com

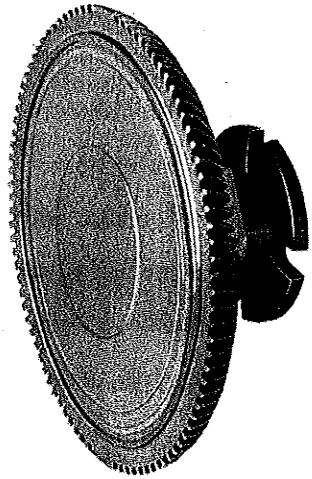


*Fig. 2—Torque Control Fan Drive*

### Thermal Control Drive

The Thermal Control Drive (Fig. 3) is essentially the same as the Torque unit except for a thermal spring on the drive face. The thermal spring senses the heat from the radiator and engages the drive for normal fan operation when required.

In case of engine overheating during slow vehicle speed or idle operation, increase the engine speed to approximately 1000 rpm in neutral gear. If the condition is not corrected by increasing the engine speed, replace the fan drive unit with a unit known to be operating properly and test by operating the vehicle under the same conditions. Replace the original drive unit assembly if the trouble was corrected with the test unit.

## WATER PUMP

### Removal

(1) Drain the cooling system and remove the fan shroud if so equipped. Loosen the fan drive belt by loosening the alternator mounting bracket and swing the alternator in towards the water pump (on vehicles equipped with air conditioning, loosen the idler pulley).

(2) Remove the fan, spacer and pulley.

(3) Remove the water pump to housing retaining bolts and washers and remove the water pump from the vehicle. Discard the gasket.

### Installation

**CAUTION: When replacing the water pump do not install a standard water pump on any air conditioned vehicle except those equipped with trailer towing package or vice verse. See specifications for proper pump.**

(1) Use a new gasket and install the water pump. Tighten the bolts to 30 foot-pounds.

(2) Install the pulley spacer, fan and shroud (when so equipped). Fill the cooling system and test for leaks. Tighten belts as outlined in "Accessory Belt Drives."

### Disassembly (170,225 cubic inch engines) (Fig. 4).

(1) Break the plastic impeller and remove it from the metal insert.

(2) Remove the separator plate and gasket.

(3) Split the sintered metal insert of the plastic impeller with a chisel and hammer.

(4) Remove the rubber portion of the shaft seal and the spring.

(5) Using remover Tool C-3753 (Fig. 5) remove the retainer portion of the seal.

(6) Remove the fan hub using remover Tool C-412.

(7) Support the pump body on the front face (fan hub end) and apply pressure to the rear end of the shaft to press the shaft and bearing assembly out through the front of the pump. If an attempt is made to remove the shaft in the opposite direction damage to the pump body may result.

(8) Use a wire brush to remove all rust from the

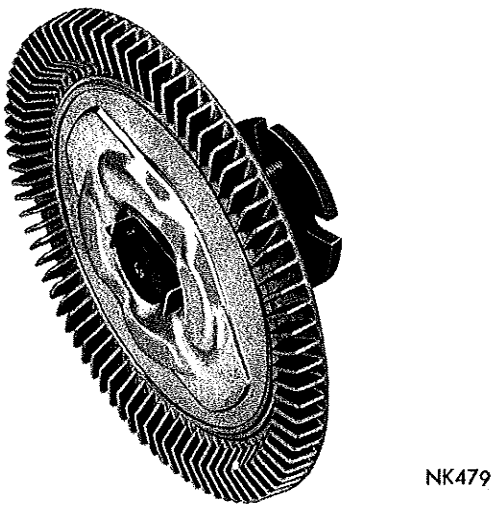


*Fig. 3—Thermal Control Fan Drive*

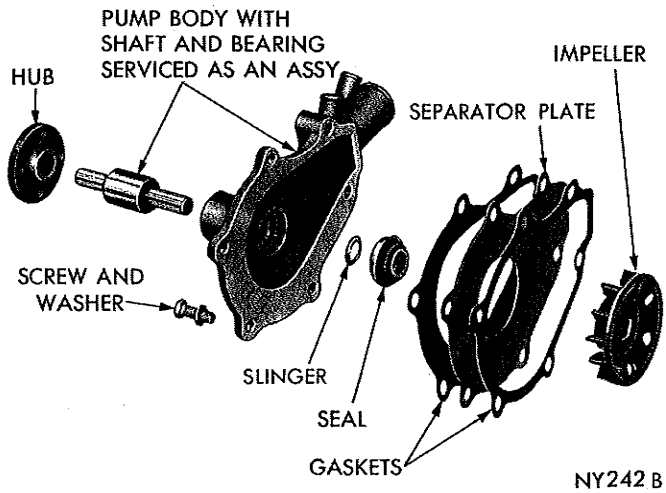


*Fig. 4—170-225 Cubic Inch Engine Water Pump*

MyMopar.com

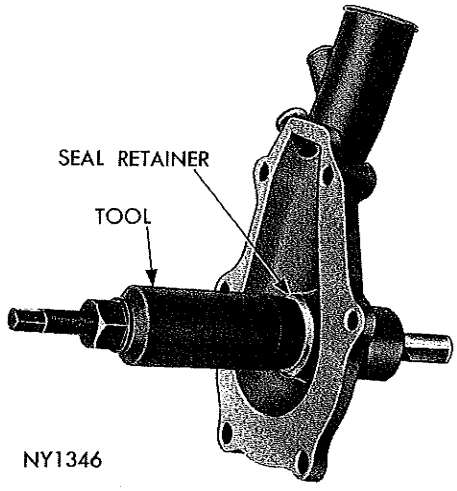


*Fig. 5—Removing Seal Retainer*

separate plate. Clean all parts with a suitable solvent and dry with compressed air. **Bearing assemblies removed from water pumps should not be reused,** as damage to the bearing will usually result during removal.

### *Assembly (170, 225 cubic inch engines)*

**Inspect seal surface of the impeller hub to be sure it is free of nicks, burrs, scratches and rust. If necessary remove these blemishes using crocus cloth on a flat plate.**

(1) Apply a thin coat of Mopar Perfect Seal Sealing Compound, Part Number 1057794 or equivalent to the seal pocket in the pump body.

(2) With the pump housing supported at the hub end, use a 1¼ inch (12 point) socket to apply pressure against the outer lip of the seal retainer and press the seal assembly into the body until the retainer lip is against the pump body.

(3) With the slinger ring in position on the long end of the pump shaft (approximately ⅛ inch from the bearing assembly) start the shaft and bearing assembly into the fan end of the pump body bore.

(4) Use a 1¼ inch (12 point) socket and support the pump body at the seal end, and with Tool C-3468, positioned against the outer bearing race only, press the shaft and bearing into the pump body so the end of the bearing is flush with the body hub end.

(5) While supporting the pump, on the impeller end of the shaft, press the fan hub onto the shaft (flat surface out) so that shaft extends 13/32 inch beyond the fan hub.

(6) Position new gaskets on each side of the separator plate and install the plate on the pump body.

(7) Clean the seal face and impeller hub seal surface.

(8) Support the pump on the fan hub end of the shaft and position the new impeller on the pump shaft (blade portion down). Using a tool that will press against the impeller insert only, press the impeller onto the shaft until it is flush with the end of the shaft.

### *Disassembly (273, 318 cubic inch engines) (Fig. 6).*

(1) Break the plastic impeller and remove it from the metal insert.

(2) Split the sintered metal insert of the plastic impeller with a chisel and hammer.

(3) Remove the rubber portion of the shaft seal and the spring.

(4) Using remover Tool C-3753 remove the retainer portion of the seal.

(5) Remove the fan hub using puller Tool C-412 (Fig. 8).

(6) Support the pump body on the front face (fan hub end) and apply pressure to the rear end of the shaft to press the shaft and bearing assembly out through the front of the pump. If an attempt is made to remove the shaft in the opposite direction, damage to the pump body may result.

(7) Use a wire brush to remove all rust from the housing. Clean all parts with a suitable solvent and dry with compressed air. **Bearing assemblies removed from water pumps should not be reused,** as damage to the bearing will usually result during removal.

### *Assembly (273, 318 cubic inch engines)*

**Inspect the seal surface of the impeller hub to be sure it is free of nicks, burrs, scratches and rust. If necessary remove these blemishes using croscus cloth on a flat plate.**

(1) Apply a thin coat of Mopar Perfect Seal Sealing Compound, Part Number 1057794 or equivalent to the seal pocket in the pump body.

(2) With the pump housing supported at the hub end, use a 1¼ inch (12 point) socket to apply pressure against the outer lip of the seal retainer and press the seal assembly into the body until the retainer lip is against the pump body.

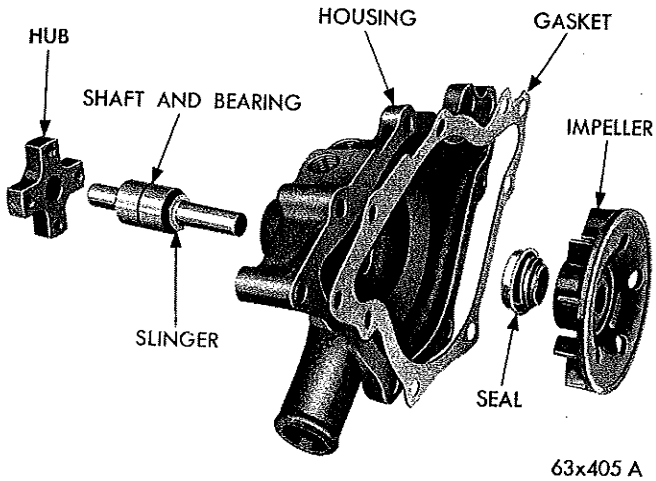


*Fig. 6—273-318 Cubic Inch Engine Water Pump*

MyMopar.com

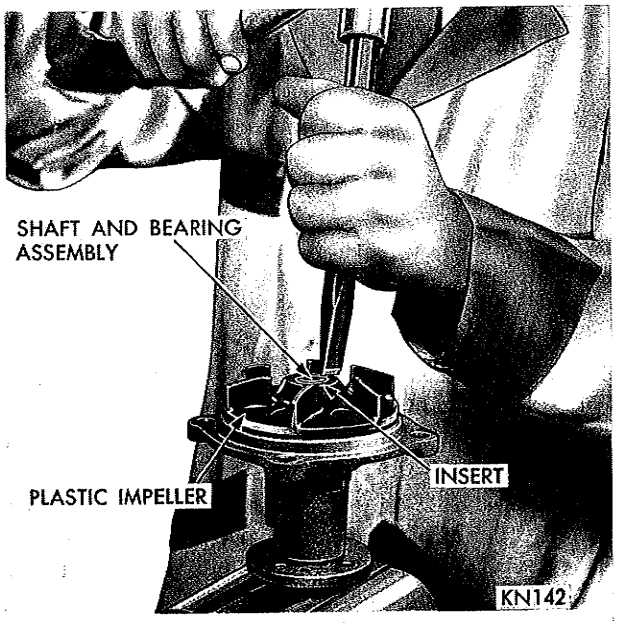


*Fig. 7—Removing Plastic Impeller and Metal Insert*

(3) With the slinger ring in position on the long end of the pump shaft (approximately ⅛ inch from the bearing assembly) start the shaft and bearing assembly into the fan hub end of the pump body bore.

(4) Use a 1¼ inch (12 point) socket and support the pump body at the seal end, and with Tool C-3468, positioned against the outer bearing race only, press the shaft and bearing into the pump body so the end bearing is flush with the housing.

(5) While supporting the pump on the impeller end of the shaft, press the fan hub onto the shaft so the shaft extends 11/32 inch through the fan hub.

(6) Support pump on fan hub end of the shaft and position new impeller on pump shaft (blade portion down). Using a tool that will press against the impeller insert only, press impeller onto shaft until it is flush with the end of the shaft.

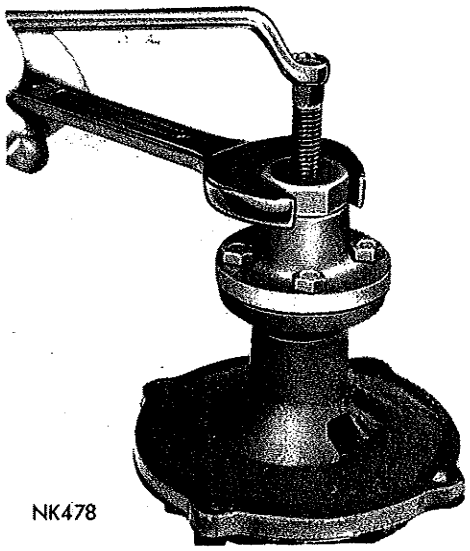


*Fig. 8—Removing Fan Hub*

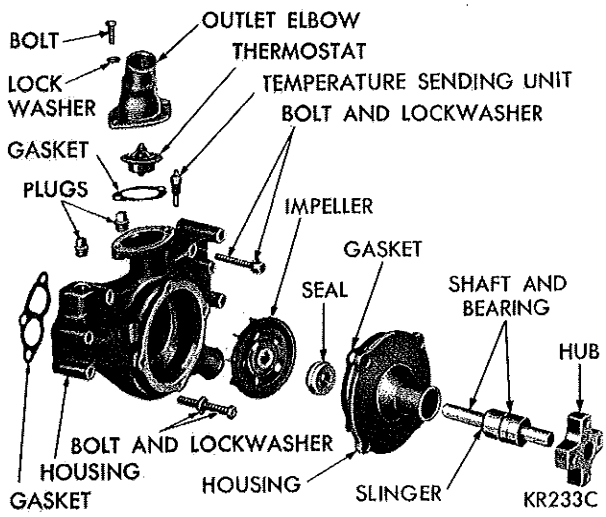


*Fig. 9—361-383-426 Cubic Inch Engine Water Pump*

### *Disassembly (361, 383, 426 cubic inch Engines) (Fig. 9).*

(1) Remove the fan hub from the shaft using remover Tool C-412 (Fig. 8).

(2) Support the pump on the hub end and remove the plastic impeller by breaking it away from the metal insert (Fig. 7).

(3) Split the sintered metal insert of the plastic impeller with a chisel and hammer.

(4) Remove the rubber portion of the shaft seal and the spring.

(5) Using Tool C-3753, remove the seal retainer from the housing.

(6) Support the body on the front face (fan hub end) and apply pressure to the rear end of the shaft to press out the shaft and bearing assembly through the **front** of the pump. **If an attempt is made to remove the shaft in the opposite direction, damage to the water pump body will result.**

### *Assembly (361, 383, 426 cubic inch engines)*

Before assembling, clean all parts thoroughly in a suitable solvent and dry with compressed air.

**CAUTION: Bearing assemblies removed from water pumps, for any reason should not be reused as damage to bearings will usually result during removal.**

**Inspect the seal surface of the impeller hub to be sure it is free of nicks, burrs, scratches and rust. If necessary remove these blemishes using a crocus cloth on a flat plate.**

(1) Apply a thin coat of Mopar Perfect Seal Sealing Compound, Part Number 1057794 or equivalent to the seal pocket in the pump body.

(2) With the pump housing supported at the hub end, use a 1¼ inch (12 point) socket to apply pressure against the outer lip of the seal retainer and press the seal assembly into the body until the retainer lip is against the pump body.

(3) With the slinger ring in position on the long

MyMopar.com

end of the pump shaft (approximately ⅛ inch from the bearing assembly) start the shaft and bearing assembly into the fan hub end of the pump body bore.

(4) Use a 1¼ inch (12 point) socket and support the pump body at the seal end. With Tool C-3468 positioned against the outer bearing race, press the shaft and bearing into the pump body so the end of bearing is exactly flush with the end of the pump body.

(5) While supporting the pump on the impeller end of the shaft, press the fan hub onto the shaft (flat surface out) so the shaft extends 11/32 inch through the fan hub.

(6) Support the pump on the fan hub end of the shaft and position the new impeller on the pump shaft (blade portion up). Using a tool that will press against the impeller insert only, press the impeller onto the shaft until it is flush with the end of the shaft.

## RADIATOR

### Removal

(1) Drain the cooling system.

(2) On vehicles with automatic transmission, disconnect the oil cooler lines at the radiator bottom tank.

(3) Remove upper and lower radiator hoses (using pliers Tool C-3250).

(4) On vehicles with fan shroud, remove lower half of fan shroud.

(5) Remove radiator attaching screws.

(6) The radiator can now be lifted free from the engine compartment. Care should be taken not to damage the radiator cooling fins or water tubes during removal. Fan damage should be avoided.

### Installation

(1) Slide the radiator down into position behind the radiator support and install the attaching bolts.

(2) Install the fan shroud, connect the hoses, and connect the transmission oil cooler lines.

(3) Fill the cooling system to 1¼" below the filler neck seat with water and rust inhibitor or water and a sufficient supply of anti-freeze.

(4) On vehicles with automatic transmission, measure the transmission oil level after warm-up and add oil as required.

### Cleaning

(1) Drain the cooling system and refill with clean SOFT water and add the contents of one can (No. 1 top-compartment) of MoPar Cooling System Cleaner or equivalent.

(2) Operate the engine at a fast idle for ½ to ¾ hour.

(3) Drain the cooling system and refill with clean water.

(4) Pour the conditioner (No. 2 bottom-compartment) into the radiator and run engine for ten minutes.

(5) Flush the entire cooling system until water runs clean.

(6) Refill the radiator with clean SOFT water.

(7) Use Radiator Rust Inhibitor during the summer months.

## TRANSMISSION OIL COOLER

The transmission oil cooler is located in the bottom radiator tank, which is an integral part of the radiator.

In case of a leak, the engine coolant may become mixed with the transmission fluid, also, the transmission fluid may enter the cooling system. Both the cooling system and the transmission should be inspected in the event the cooler is leaking.

### Testing Oil Coolers for Leaks

(1) Disconnect both oil lines at the radiator.

(2) Attach a pressure gauge to one radiator fitting and an air line equipped with a shut-off valve to the other fitting.

(3) Coat all fitting joints with oil.

(4) Apply air pressure (up to 100 psi). Oil bubbles will identify any fitting joint leaks which should be corrected before proceeding with the test.

(5) Close the valve and note pressure gauge reading. If pressure drops off, the oil cooler leaks.

### Repairing the Oil Cooler

(1) Remove the radiator.

(2) Remove the radiator bottom tank.

(3) Melt the soft solder holding the cooler to the tank.

(4) Remove the stamped retainer nuts holding the cooler fittings to the bottom tank and remove the cooler.

(5) Install a new cooler or repair the old cooler with **silver solder** and reinstall as follows:

(6) Position the oil cooler in the bottom tank and install the stamped retainer nuts on the oil cooler fittings.

(7) Use soft solder to secure the cooler in the tank.

(8) Attach the bottom tank to the radiator using soft solder.

(9) Install the radiator as described in Paragraph "RADIATOR."

(10) Fill the cooling system and test for leaks.

If the transmission operates properly after repairing the leak, drain the transmission and torque converter while hot, remove the transmission oil pan and inspect for sludge, rust, dirty or plugged inlet filter. If none of these conditions are found, reconditioning may not be necessary. Reassemble, using Transmission Fluid Type "AQ-ATF" Suffix "A."

## PRESSURE FLUSHING THE COOLING SYSTEM

(1) Clean system using recommended Cooling System Cleaner according to directions on label.

MyMopar.com

(2) Drain the radiator and engine block and remove both radiator hoses.

(3) Remove the thermostat and reinstall the housing.

(4) Connect a flushing gun, Tool C-3514, to the engine thermostat housing, using a length of rubber hose.

(5) Install a drain hose on the water pump inlet.

(6) Connect a flushing gun to sources of water and air pressure.

(7) Fill the cylinder block with water by restricting the drain hose. Leave the water valve open.

(8) Open and close the air valve to agitate and force away any foreign material. Continue the operation until the water runs clear.

(9) For the final block flushing, fill the block with water and remove the drain plugs. Use air pressure until the water from the block drains runs clear.

(10) To reverse flush the radiator, disconnect the two hoses from the engine and attach them to the radiator. Attach the flushing gun hose to the lower radiator tank and the drain hose to the top tank.

(11) Fill the radiator with water, leave the water valve open, and open and close the air valve. Continue the operation of the air valve until the water runs clear.

(12) For the final radiator flushing, attach a flushing gun to the top hose and repeat the flushing operation.

(13) Test the thermostat as described in Paragraph "THERMOSTAT." If satisfactory, install with the pellet towards the engine, using a new gasket.

(14) Install the hoses and fill the cooling system to 1¼ inches below the filler neck, using water and rust resistor or water and antifreeze, depending on the season.

(15) Operate the engine until the temperature gauge indicates normal operating temperature and continue an additional five minutes to release any air trapped in the system. Inspect the coolant level and if necessary, add additional water.

## THERMOSTAT

The thermostat is actuated by a pellet containing a copper-impregnated wax (Fig. 10). As the temperature of the pellet increases, the wax expands and opens the valve. A 180° thermostat is standard equipment.

If the thermostat does not close completely when cold, the engine will warm up slowly or not at all, and heater performance will also be impaired. Poor heater performance may also be due to the valve opening at too low a temperature. Too high a valve opening temperature or a valve that will not open can cause overheating.

### Removal

(1) Drain the cooling system down to the thermostat level or below.

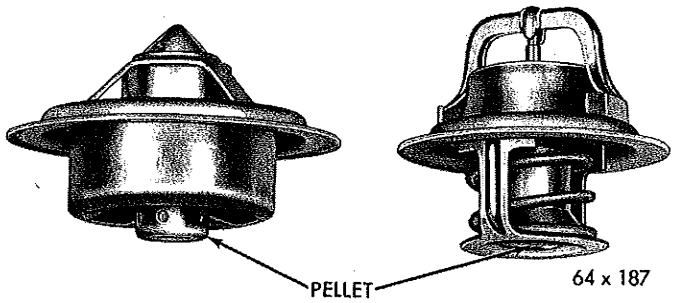


*Fig. 10—Thermostats*

(2) Remove the upper radiator hose from the thermostat housing using pliers Tool C-3250.

(3) Remove the thermostat housing bolts and remove the thermostat and housing.

### Testing the Thermostat

(1) Visually inspect the thermostat to make sure the valve closes tightly. If the valve does not close completely due to dirt, sand or other foreign material, carefully clean the sealing edge making sure the sealing edge is not damaged. If the valve does not close tightly when clean, install a new thermostat.

(2) Immerse the thermostat in a container of warm water so that the pellet of the thermostat is completely covered. The pellet must not touch the bottom or sides of the container.

(3) Heat the water and stir it continuously (to insure uniform temperature) and test the water temperature with a thermometer at the point when a .003″ feeler gauge can be inserted into the valve opening. The feeler gauge should pass freely into the valve opening at a water temperature of 175° to 185°F. If outside of this range, replace the thermostat.

(4) Continue heating the water to approximately 200°F. The thermostat valve should be fully open at this temperature. If it is not, replace the thermostat.

### Installation

(1) Using a new gasket, position the thermostat so the pellet end is toward the engine and attach with bolts through the thermostat housing.

(2) If removed, reinstall or replace the upper hose using Tool C-3250.

(3) Fill the cooling system to 1¼ inches below the filler neck with water and rust resistor or water and antifreeze.

## RADIATOR HOSES

The hoses are removed and installed using hose clamp pliers Tool C-3250.

A hardened, cracked, swollen or restricted hose should be replaced.

The reinforcement spring inside the lower hose is necessary to prevent collapsing of the hose due to

MyMopar.com

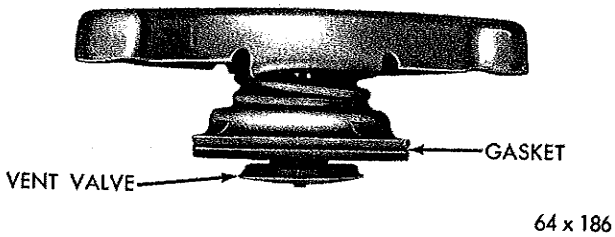


*Fig. 11—Radiator Pressure Cap*

suction at medium or high engine speeds. If this spring is weak or broken, it should be replaced.

## RADIATOR PRESSURE CAP

A 14 psi pressure-vent type radiator cap (Fig. 11) is used as standard equipment (16 psi for air conditioned vehicles C.A.P. equipped and trailer towing package).

**When removing the pressure cap, turn the cap counterclockwise to the stop permitting any pressure to be released through the overflow tube. This will prevent hot water from spraying out of the radiator filler opening.** After pausing at the stop, continue turning counter-clockwise until the cap is released.

The brass vent valve at the bottom of the cap should hang freely. If the rubber gasket has swollen and prevents the vent valve from hanging loosely, the cap should be replaced.

### *Pressure Testing the Radiator Cap (Fig. 12)*

(1) Attach the neoprene seal and adapter to tester, Tool C-3499.

(2) Dip the pressure cap in water and install the cap on the tester adapter.

(3) Apply pressure to the cap. If the pressure cap fails to hold pressure within a range of 12 to 15 psi, replace with a new tested cap (Air conditioned vehicles caps should test between 15 and 16 psi.)

## PRESSURE TESTING THE COOLING SYSTEM

(1) For testing purposes only, fill the radiator to within ½ inch of the filler neck.

(2) Wipe the filler neck sealing surface clean.

(3) Attach a tester Tool C-3499 to the filler neck and apply 15 psi pressure (Fig. 13).

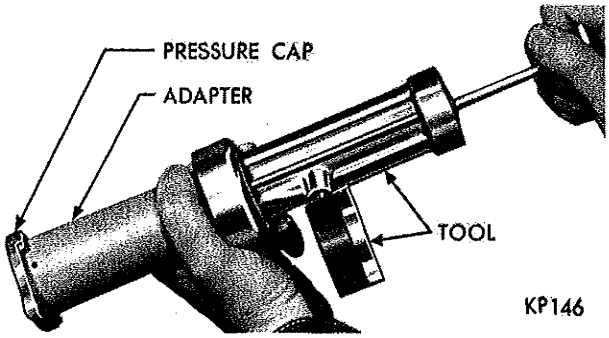


*Fig. 12—Testing Pressure Cap*

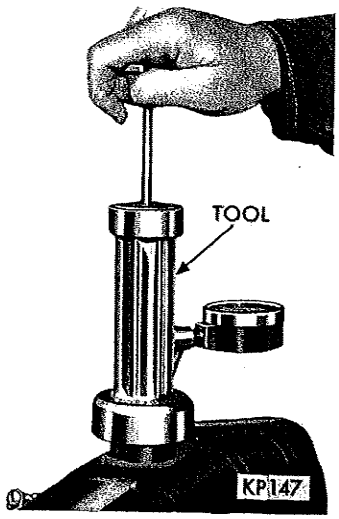


*Fig. 13—Pressure Testing Cooling System*

(4) If the pressure gauge reading holds steady, the system is satisfactory. If the pressure drops, continue the test as follows:

(5) Test all points for external leaks. If no external leaks are found after the gauge dial showed a drop in pressure, continue the test.

(6) Remove the tester and run the engine until normal operating temperature is reached.

(7) Re-attach the tester, apply 7 psi pressure and increase engine speed to half throttle.

(8) If the needle on the dial fluctuates, it indicates a combustion leak, generally at the head gasket. On V-8 engines, detach spark plug leads from one bank and operate the engine on the opposite bank. If the needle continues to fluctuate, the bank in operation leaks. If the needle stops fluctuating, the bank not in operation leaks.

(9) If the needle on the dial did not fluctuate in step 7, sharply accelerate the engine several times. If an abnormal amount of water emits from the tail

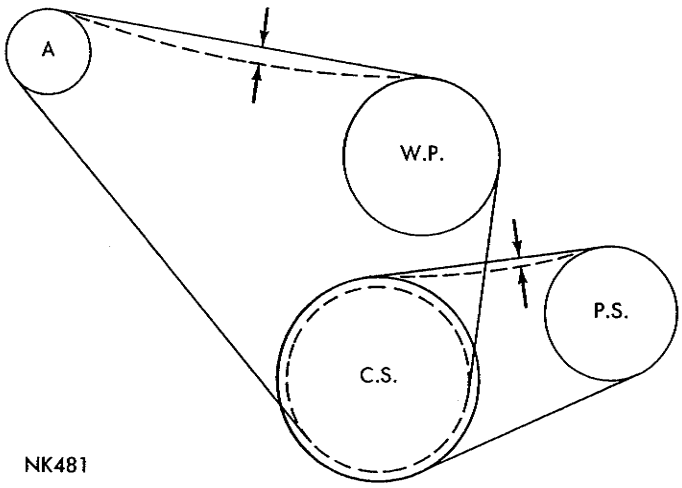


*Fig. 14—Belt Deflection Locations*

MyMopar.com

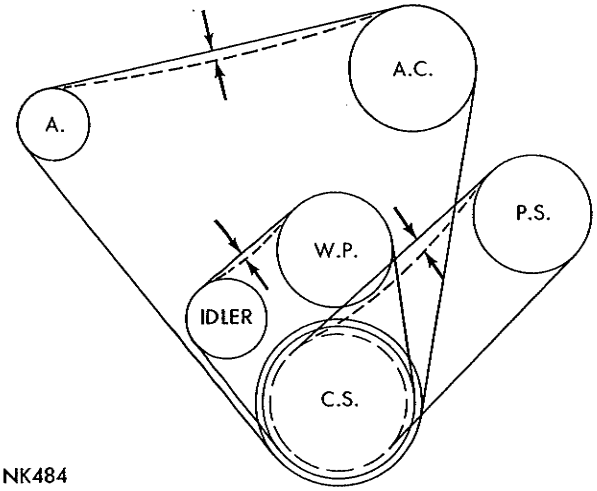

NK484

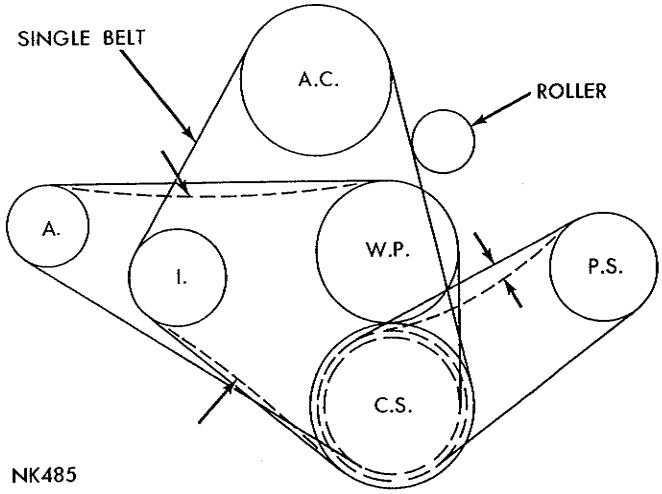

NK485

pipe, it indicates a head gasket leak, cracked block, or cracked head.

## ENGINE WATER TEMPERATURE GAUGE

For Removal, Installation and Testing procedures of the water temperature sending and receiving units, refer to Group 8, Electrical System, "Gauges."

## PROPER BELT TENSION

The satisfactory performance of the belt driven accessories depends on the maintenance of the proper belt tension. If the specified tensions are not maintained, belt slippage may cause engine overheating, lack of power steering assist, loss in air conditioning capacity, reduced alternator charging rates, and greatly reduced belt life. To avoid any such adverse effects, the following service procedure should be followed:

(1) Retighten all belts to the specified **used belt** tension at the new vehicle preparation.

(2) Retighten all belts at the 2000 mile checkup.

(3) Measure all belts by the deflection method at servicing and retighten if needed.

(4) The new belt tension specifications should be used on all belt replacements, and the above procedure followed thereafter.

There are two methods by which belt tensions can be properly established.

### *Belt Deflection Method*

The belts may be adjusted by measuring the deflection of the belt at the mid-point between two pulleys under a five-pound push, or pull. A small spring scale can be used to establish the five-pound load. See Figure 14 for correct locations at which to measure deflection.

This method should be used only when it is not possible to use the torque method, as it is a less accurate substitute. To adjust the belts by the deflection method, loosen all the mounting bolts and use a bar to apply tension to the belts being careful not to damage the accessory. Tighten the mounting bolts and measure the deflection. (See Belt Tension Specifications.) It may be necessary to repeat this procedure several times to establish the correct tension.

Any belt that has operated for a minimum of a half-hour is considered to be "used."

### *Torque Method*

The alternator and power steering pump belts may be adjusted to the specified tension, by the use of a torque wrench. (Refer to Belt Tension Specifications.)

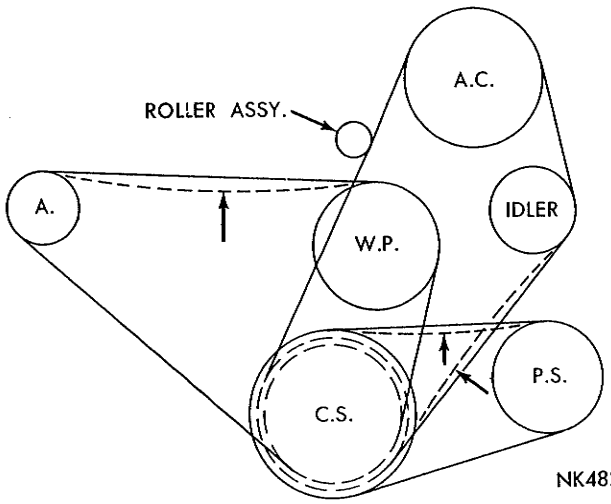

NK482

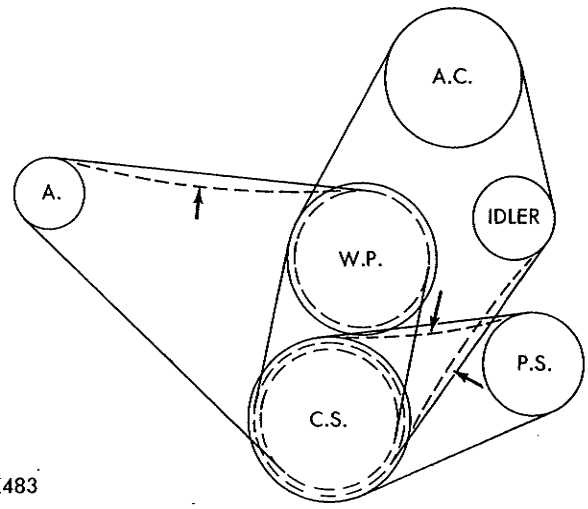

NK483

MyMopar.com

The alternator belts are adjusted by using Tool C-3841 along with a torque wrench.

The power steering belts are adjusted by inserting the square shank of the torque wrench into the hole provided in the pump bracket. On pumps using the self-tightening bracket use Tool C-3832 with torque wrench.

To tighten the belts by the torque method, loosen all the mounting bolts, then apply the specified torque to the accessory, as shown in the Specifications. Tighten all the mounting bolts while the torque is applied to the accessory.

Other belts may also be tightened by this method if the adjusting bracket has a square hole. If it is not possible to use the torque wrench, because of clearance, use an extension.

# SPECIFICATIONS

## VALIANT, BARRACUDA

| Engine | Options | Transmission | Oil Cooler Size | Box Shroud | Fan | | | | | | Water Pump Impeller | | Pressure Cap PSI | Coolant Capacity |
|---|---|---|---|---|---|---|---|---|---|---|---|---|---|---|
| | | | | | Diameter | No. Blades | Width | Ratio | Drive | Spacer | Diameter | Blades | | |
| 170 | None | 3-Speed Manual | — | None | 16" | 4 | 1½" | 1.07 | Solid | .90" | 3.50" | 6 | 14 | 11** |
| | | Automatic | 10" | * | * | * | * | * | * | * | * | * | * | * |
| | C.A.P. | 3-Speed Manual | — | * | * | * | * | * | * | * | * | * | 16 | * |
| | | Automatic | 10" | * | * | * | * | * | * | * | * | * | * | * |
| | A/C | N/A | N/A | N/A | N/A | N/A | N/A | N/A | N/A | N/A | N/A | | N/A | N/A |
| | Trailer Tow | N/A | N/A | N/A | N/A | N/A | N/A | N/A | N/A | N/A | N/A | | N/A | N/A |
| 225 | None | 3-Speed Manual | — | None | 16" | 4 | 1½" | 1.07 | Solid | .90" | 3.50" | 6 | 14 | 12** |
| | | Automatic | 10" | * | * | * | * | * | * | * | * | * | * | * |
| | C.A.P. | 3-Speed Manual | — | * | 17" | 4 | 1½" | * | * | * | * | * | 16 | * |
| | | Automatic | 10" | * | * | * | * | * | * | * | * | * | * | * |
| | A/C | 3-Speed Manual | — | Yes | 17" | 6 | 1¼" | 1.10 | * | * | * | * | * | * |
| | | Automatic | 10" | * | * | * | * | * | * | * | * | * | * | * |
| | A/C & C.A.P. | 3-Speed Manual | — | * | * | * | * | * | * | 1.06" | * | * | * | 13** |
| | | Automatic | 10" | * | * | * | * | * | * | * | * | * | * | * |
| | Trailer Tow & A/C | Automatic | 10" | * | * | * | * | * | * | * | * | * | * | * |
| | Trailer Tow | Automatic | 10" | * | * | * | * | 1.07 | * | * | * | * | * | * |
| 273-2 BBl. | None | 3-Speed Manual | — | None | 17" | 4 | 2" | .95 | Solid | 2.0 | 4.20" | 10 | 14 | 17** |
| | | Automatic | 10" | * | * | * | * | * | * | * | * | * | * | * |
| | C.A.P. | 3-Speed Manual | — | Yes | 17" | 6 | 2" | * | * | * | * | * | 16 | * |
| | | Automatic | 10" | * | * | * | * | * | * | * | * | * | * | * |
| | A/C | 3-Speed Manual | — | N/A | N/A | N/A | | N/A | N/A | N/A | N/A | | * | * |
| | | Automatic | 10" | Yes | 17" | 7 | 1¾" | .95 | Solid | 2.0 | 4.20" | 10 | * | * |
| | A/C & C.A.P. | 3-Speed Manual | — | N/A | N/A | N/A | N/A | N/A | N/A | N/A | N/A | | N/A | N/A |
| | | Automatic | 10" | Yes | 17" | 7 | 2¼" | 1.4 | Thermal | None | 3.50" | 6 | 16 | 17** |
| | Trailer Tow | Automatic | 10" | * | 17" | 7 | 1¾" | .95 | Solid | 2.0 | 4.20" | 6 | * | * |
| 273-4 BBl. | None | 4-Speed Manual | — | None | 17" | 4 | 2" | .95 | Solid | 2.0 | 4.20" | 10 | 14 | 17** |
| | | Automatic | 10" | * | * | * | * | * | * | * | * | * | * | * |
| | C.A.P. | 4-Speed Manual | — | Yes | 17" | 6 | 2" | * | * | * | * | * | 16 | * |
| | | Automatic | 10" | * | * | * | * | * | * | * | * | * | * | * |
| | A/C | 4-Speed Manual | — | * | 17" | 7 | 1¾" | * | * | * | * | * | * | * |
| | | Automatic | 10" | * | * | * | * | * | * | * | * | * | * | * |
| | A/C & C.A.P. | 4-Speed Manual | — | * | 17" | 7 | 2¼" | 1.4 | Thermal | None | 3.50" | 6 | * | * |
| | | Automatic | 10" | * | * | * | * | * | * | * | * | * | * | * |
| | Trailer Tow | Automatic | 10" | * | 17" | 7 | 1¾" | .95 | Solid | 2.0 | 4.20" | 6 | * | * |

## BELVEDERE AND SATELLITE

| Engine | Options | Transmission | Oil Cooler Size | Box Shroud | Fan | | | | | | Water Pump Impeller | | Pressure Cap PSI | Coolant Capacity |
|---|---|---|---|---|---|---|---|---|---|---|---|---|---|---|
| | | | | | Diameter | No. Blades | Width | Ratio | Drive | Spacer | Diameter | Blades | | |
| 225 | None | 3-Speed Manual | — | None | 17" | 4 | 1½" | 1.07 | Solid | 1.40" | 3.50" | 6 | 14 | 12** |
| | | Automatic | 10" | * | * | * | * | * | * | * | | | | |
| | C.A.P. | 3-Speed Manual | — | * | * | * | * | * | * | * | | | 16 | |

MyMopar.com

| | | | | | | | | | | | | | | |
|---|---|---|---|---|---|---|---|---|---|---|---|---|---|---|
| | | Automatic | 10" | * | * | * | * | * | * | * | | | | |
| | A/C | 3-Speed Manual | — | Yes | 18" | 4 | 2" | * | * | 1.24" | | | | 13** |
| | | Automatic | 10" | * | | | | * | * | * | | | | |
| | A/C & C.A.P. | 3-Speed Manual | — | * | | | | * | * | * | | | | |
| | | Automatic | 10" | * | | | | * | * | * | | | | |
| | Trailer Tow | N/A | — | N/A | | N/A | | N/A | N/A | N/A | N/A | N/A | N/A | N/A |
| 273-2 BBl. | None | 3-Speed Manual | — | None | 18" | 4 | 2" | .95 | Solid | 2.0" | 4.20" | 10 | 14 | 17** |
| | | Automatic | 10" | * | * | * | * | * | * | * | * | | | * |
| | C.A.P. | 3-Speed Manual | — | * | 18" | 7 | 2" | * | * | * | * | | 16 | * |
| | | Automatic | 10" | * | * | * | * | * | * | * | * | | | * |
| | A/C | 3-Speed Manual | — | Yes | * | * | * | * | * | * | * | * | * | * |
| | | Automatic | 10" | * | * | * | * | * | * | * | * | * | | * |
| | A/C & C.A.P. | 3-Speed Manual | — | * | 18" | 7 | 2¼" | 1.3 | Thermal | None | 3.50" | 6 | * | * |
| | | Automatic | 10" | * | * | * | * | * | * | * | * | * | * | * |
| | Trailer Tow | Automatic | 10" | * | 18" | 7 | 2" | .95 | Solid | 2.0" | 4.20" | 10 | * | 18** |
| 318 | None | 3-Speed Manual | — | None | 18" | 4 | 2" | .95 | Solid | 2.0" | 4.20" | 10 | 14 | 20** |
| | | Automatic | 10" | * | * | * | * | * | * | * | * | * | * | * |
| | C.A.P. | 3-Speed Manual | — | * | 18" | 7 | 2" | * | * | * | * | * | 16 | * |
| | | Automatic | 10" | * | * | * | * | * | * | * | * | * | * | * |
| | A/C | 3-Speed Manual | — | Yes | * | * | * | * | * | * | * | * | * | 21** |
| | | Automatic | 10" | * | * | * | * | * | * | * | * | * | * | * |
| | A/C & C.A.P. | 3-Speed Manual | — | * | 18" | 7 | 2¼" | 1.3 | Thermal | None | * | 6 | * | * |
| | | Automatic | 10" | * | * | * | * | * | * | * | * | * | * | * |
| | Trailer Tow | Automatic | 10" | * | 18" | 7 | 2" | .95 | Solid | 2.0" | 4.20" | 10 | * | * |
| 361-2 BBl. & 383-4 BBl. | None | 3-Speed Manual 4 BBl. only | — | None | 18" | 4 | 2" | .95 | Solid | 1.4" | 4.38" | 10 | 14 | 16** |
| | | 4-Speed Manual | — | * | * | * | * | * | * | * | * | * | * | * |
| | | Automatic | 10" | None | * | * | * | * | * | * | * | * | * | * |
| | | | | Yes | * | * | * | * | * | * | * | * | * | 17** |
| | C.A.P. | 3-Speed Manual 4 BBl. only | — | Yes | 18½" | 7 | 2½" | * | Torque | None | * | * | 16 | * |
| | | 4-Speed Manual | — | * | * | * | * | * | * | * | * | * | * | * |
| | | Automatic | 10" | * | * | * | * | * | * | * | * | * | * | * |
| | A/C | 3-Speed Manual | — | N/A | | N/A | | N/A | N/A | N/A | | N/A | N/A | N/A |
| | | 4-Speed Manual 4 BBl. only | — | Yes | 18½" | 7 | 2½" | 1.4 | Thermal | None | 3.67" | 6 | 16 | 17** |
| | | Automatic | 10" | * | * | * | * | * | * | * | * | * | * | * |
| | A/C & C.A.P. | 3-Speed Manual | — | N/A | | N/A | | N/A | N/A | N/A | | N/A | N/A | N/A |
| | | 4-Speed Manual 4 BBl. only | — | Yes | 18½" | 7 | 2½" | 1.4 | Thermal | None | 3.67" | 6 | 16 | 17** |
| | | Automatic | 10" | * | * | * | * | * | * | * | * | * | * | * |
| | Trailer Tow | Automatic | 10" | * | 18" | 7 | 2¼" | .95 | Solid | 1.24" | 4.38" | 10 | * | * |

## FURY and SPORT FURY

| Engine | Options | Transmission | Oil Cooler Size | Box Shroud | FAN Diameter | FAN No. Blades | FAN Width | FAN Ratio | FAN Drive | FAN Spacer | Water Pump Impeller Diameter | Water Pump Impeller Blades | Pressure Cap PSI | Coolant Capacity |
|---|---|---|---|---|---|---|---|---|---|---|---|---|---|---|
| 225 | None | 3-Speed Manual | — | None | 17" | 4 | 1½" | 1.07 | Solid | 2.00" | 3.50" | 6 | 14 | 12** |
| | | Automatic | 10" | * | * | * | * | * | * | * | * | * | * | * |
| | C.A.P. | 3-Speed Manual | — | * | * | * | * | * | * | * | * | * | 16 | * |
| | | Automatic | 10" | * | * | * | * | * | * | * | * | * | * | * |
| | A/C & A/C w/C.A.P. | 3-Speed Manual | — | Yes | 18" | 4 | 2" | * | * | 1.6" | 3.50" | 6 | * | 13** |
| | | Automatic | 10" | * | * | * | * | * | * | * | * | * | * | * |
| | Trailer Tow | N/A | | N/A | | N/A | | N/A | N/A | N/A | | N/A | N/A | N/A |
| 318 | None | 3-Speed Manual | — | None | 18" | 4 | 2" | .95 | Solid | 2.38" | 4.20" | 10 | 14 | 20** |
| | | Automatic | 10" | * | * | * | * | * | * | * | * | * | * | * |
| | C.A.P. | 3-Speed Manual | — | * | 18" | 7 | 2" | * | * | * | * | * | 16 | * |
| | | Automatic | 10" | * | * | * | * | * | * | * | * | * | * | * |
| | A/C | 3-Speed Manual | — | Yes | * | * | * | * | * | * | * | * | * | 21** |
| | | Automatic | 10" | * | * | * | * | * | * | * | * | * | * | * |
| | A/C & C.A.P. | 3-Speed Manual | — | * | 18" | 7 | 2¼" | 1.3 | Thermal | None | 3.50" | 6 | * | * |
| | | Automatic | 10" | * | * | * | * | * | * | * | * | * | * | * |

MyMopar.com

| | | | | | | | | | | | | | | |
|---|---|---|---|---|---|---|---|---|---|---|---|---|---|---|
| | Trailer Tow | Automatic | 10″ | * | 18″ | 7 | 2″ | .95 | Solid | 2.38″ | 4.20″ | 10 | 16 | * |
| 383-2 BBl. & 383-4 BBl. | None | 3-Speed Manual | — | None | 18″ | 4 | 2″ | .95 | Solid | 1.72″ | 4.38″ | 10 | 14 | 17** |
| | | Automatic | 10″ | * | * | * | * | * | * | * | * | * | * | * |
| | C.A.P. | 3-Speed Manual | — | Yes | 18½″ | 7 | 2½″ | * | Torque | None | * | * | 16 | * |
| | | Automatic | 10″ | * | 18½″ | 7 | 2½″ | * | * | * | * | * | * | * |
| | A/C | 3-Speed Manual | — | N/A | | N/A | | | N/A | N/A | | N/A | N/A | N/A |
| | | 4-Speed Manual 4 BBl. only | — | Yes | 18½″ | 7 | 2½″ | 1.4 | Thermal | None | 3.67″ | 6 | 16 | 18** |
| | | Automatic | 10″ | * | * | * | * | * | * | * | * | * | * | * |
| | A/C & C.A.P. | 3-Speed Manual | — | N/A | | N/A | | N/A | N/A | N/A | | N/A | N/A | N/A |
| | | 4-Speed Manual | — | Yes | 18½″ | 7 | 2½″ | 1.4 | Thermal | None | 3.67″ | 6 | 16 | 18** |
| | | Automatic | 10″ | * | * | * | * | * | * | * | * | * | * | * |
| | Trailer Tow | Automatic | 12″ | * | 18″ | 7 | 2¼″ | .95 | Solid | 1.72″ | 4.38″ | 10 | * | * |
| 426 | None | 4-Speed Manual | — | None | 18″ | 4 | 2″ | .95 | Solid | 1.72″ | 4.38″ | 10 | 14 | 17** |
| | | Automatic | 12″ | * | * | * | * | * | * | * | * | * | * | * |
| | C.A.P. | 4-Speed Manual | — | Yes | 18½″ | 7 | 2½″ | * | Torque | None | * | * | 16 | * |
| | | Automatic | 12″ | * | * | * | * | * | * | * | * | * | * | * |
| | A/C | 4-Speed Manual | — | * | * | * | * | 1.4 | Thermal | * | 3.67″ | 6 | * | 18** |
| | | Automatic | 12″ | * | * | * | * | * | * | * | * | * | * | * |
| | A/C & C.A.P. | 4-Speed Manual | — | * | * | * | * | * | * | * | * | * | * | * |
| | | Automatic | 12″ | * | * | * | * | * | * | * | * | * | * | * |
| | Trailer Tow | Automatic | 12″ | * | 18″ | 7 | 2¼″ | .95 | Solid | 1.72″ | 4.38″ | 10 | * | * |

**Add one quart for heater
*Single asterick designates same as above

# BELT TENSION SPECIFICATIONS

## TORQUE METHOD

### Torque (Ft.-Lbs.) to be applied to components

| ACCESSORY MODEL APPLICATION | USED BELT* 170 Cu. In. | 225 Cu. In. | 273 Cu. In. | 318 Cu. In. | 361-383 426 Cu. In. | NEW BELT 170 Cu. In. | 225 Cu. In. | 273 Cu. In. | 318 Cu. In. | 361-383 426 Cu. In. |
|---|---|---|---|---|---|---|---|---|---|---|
| POWER STEERING BRACKET | | | | | | | | | | |
| Solid Bracket | 45 | 45 | 50 | 50 | 55 | 80 | 80 | 85 | 85 | 90 |
| Self Tightening | | | | | 45 | | | | | 45 |
| ALTERNATOR | | | | | | | | | | |
| With Air Conditioning | 15 | 15 | 30 | 30<br>45** | 40 | 20 | 20 | 50 | 50<br>70** | 60 |
| Without Air Conditioning | 15 | 15 | 30 | 30<br>25** | 40 | 20 | 20 | 50 | 50<br>35** | 60 |
| A/C IDLER BRACKET | 25 | 25 | 55 | 55 | | 35 | 35 | 75 | 75 | |
| FAN IDLER | | | | 50** | 35 | | | | 85** | 50 |

*Any belt that has operated for a minimum of a half-hour is considered to be used.
**Fury Models only.

# TIGHTENING REFERENCE

| | FOOT POUNDS |
|---|---|
| Water Pump Bolts | 30 |
| Fan Attaching Bolts | 15-18 |
| Thermostat Housing Bolts | 30 |

MyMopar.com

## BELT DEFLECTION METHOD

**Deflection (inches) to be applied at midpoint of belt segment under 5 lb. load—see Figure 14**

| ACCESSORY | Used Belt | | | | | New Belt | | | | |
|---|---|---|---|---|---|---|---|---|---|---|
| | 170 Cu. In. | 225 Cu. In. | 273 Cu. In. | 318 Cu. In. | 361-383 426 Cu. In. | 170 Cu. In. | 225 Cu. In. | 273 Cu. In. | 318 Cu. In. | 361-383 426 Cu. In. |
| POWER STEERING | 1/8 | 1/8 | 1/8 | 1/8 | 3/16 | 1/16 | 1/16 | 1/16 | 1/16 | 1/8 |
| FAN BELT IDLER | — | — | — | 1/8** | 1/8 | — | — | — | 1/16** | 1/16 |
| A/C IDLER BRACKET | 1/8 | 1/8 | 1/8 | 1/8* | — | 1/16 | 1/16 | 1/16 | 1/16* | — |
| ALTERNATOR | | | | | | | | | | |
| Without A/C | 1/4 | 1/4 | 1/4 | 1/4 | 1/4 | 5/32 | 1/8 | 1/8 | 1/8 | 1/8 |
| With A/C | — | 1/4 | 1/4 | 1/4* | 3/8 | 1/8 | 1/8 | 1/8 | 1/8* | 1/4 |
| | — | — | | 3/8** | — | — | — | | 1/4** | — |

*Single Belt
**Dual Belt

MyMopar.com

# ELECTRICAL

## CONTENTS


| | Page | | Page |
|---|---|---|---|
| ALTERNATOR AND VOLTAGE REGULATOR | 22 | INSTRUMENTS AND INDICATORS | 68 |
| BATTERY | 1 | SPECIFICATIONS | 88 |
| HEADLIGHTS | 64 | STARTING MOTOR | 5 |
| HORNS | 87 | TURN SIGNALS | 76 |
| IGNITION SYSTEM | 41 | WINDSHIELD WIPERS | 80 |
| | | WIRING DIAGRAMS | 101 |


## BATTERY

### INDEX


| | Page | | Page |
|---|---|---|---|
| Adjustment of Acid Gravity | 2 | Slow Charging | 4 |
| Battery Testing Chart | 1 | Three Minute Charge Test | 3 |
| Battery Visual Inspection | 1 | High Rate Discharge Test of Battery Capacity | 3 |
| Charging the Battery | 3 | Specifications | 88 |
| Fast Charging | 3 | Specific Gravity Test | 2 |


### BATTERY TESTING CHART

| Hydrometer Test (Corrected to 80°F.) | State of Charge or Battery Condition | Correction |
|---|---|---|
| **LESS THAN 1.220 SP. GR.** | Battery low. | Recharge battery. Make a high rate discharge test for capacity. If cells test O.K., recharge and adjust gravity of all cells uniformly. Test voltage regulator setting. Thoroughly test electrical system for short circuits, loose connections and corroded terminals. |
| **CELLS SHOW MORE THAN 25 POINTS (.025 Specific Gravity) VARIATION** | Short circuit in low cell.<br>Loss of electrolyte by leakage or excessive overcharge.<br>Natural or premature failure.<br>Cracked case. | Try to recharge the battery. See "Charging the Battery." See "Adjustment of Acid Gravity." Test battery for capacity. Install new battery if necessary. |
| **CELLS SHOWING MORE THAN 1.220 SPECIFIC GRAVITY** | Satisfactory. | No correction required. Make a high rate discharge capacity test; if cells test O.K., adjust gravity of all cells uniformly. |
| **IF THE VOLTAGE DROP IS MORE THAN 0.3 VOLTS (3/10) BETWEEN THE STARTING MOTOR CABLE AND THE VEHICLE FRAME WHILE CRANKING LOOK FOR:** | Poor contact between cable terminal and vehicle frame or between cable clamp terminal and battery post or starter switch contacts.<br>Frayed, corroded or broken cable. | Locate high resistance; repair or replace as necessary. |

## SERVICE PROCEDURES

### BATTERY VISUAL INSPECTION

(1) Protect paint finish with fender covers.

(2) Disconnect battery cables at battery.

(3) Remove battery hold-down clamp and remove battery from vehicle.

(4) Inspect battery carrier and fender side panel for damage caused by loss of acid from battery.

(5) Clean top of battery with a solution of clean warm water and baking soda. Scrub areas with a stiff bristle brush being careful not to scatter corrosion residue. Finally wipe off with a cloth moistened with ammonia or baking soda in water.

**CAUTION: Keep cleaning solution out of battery cells to eliminate weakening the electrolyte.**

(6) Inspect cables. Replace damaged or frayed

MyMopar.com

cables.

(7) Clean battery terminals and inside surfaces of clamp terminals with Cleaning Tool MX-75.

(8) Examine battery case and cover for cracks.

(9) Install battery.

(10) Tighten battery hold-down screw nuts to 3 foot-pounds. **Observe polarity of battery terminals to be sure battery is not reversed.**

(11) Connect cable clamps to battery posts and tighten securely. Coat all connections with light mineral grease or petrolatum after tightening.

(12) If electrolyte level is low, fill to recommended level with mineral-free water.

## SPECIFIC GRAVITY TEST

A hydrometer Tool 40-B is used to measure specific gravity of electrolyte in battery cells. This gives an indication of how much unused sulphuric acid remains in the solution.

A hydrometer should be graduated to read from 1.160 to 1.320, in graduations of .005 specify gravity. Graduated markings should be not less than 1/16 inch apart and accurate to within .002 specific gravity. Graduated portion of the stem should be about two inches long. Clearance between float and glass barrel, at smallest diameter, should be a minimum of ⅛" around all sides and barrel must be clean. **Hydrometer floats are calibrated to indicate correctly only at one fixed temperature.**

Liquid level of battery cell should be at normal height and electrolyte should be thoroughly mixed with any battery water which may have just been added by charging battery before taking hydrometer readings. See "Adjustment of Acid Gravity."

In reading a hydrometer, the gauge barrel must be held vertically and just the right amount of fluid be drawn up into gauge barrel with pressure bulb fully expanded to lift float freely so it does not touch the sides, top or bottom of gauge level barrel. Take a reading with eye on level with liquid level in gauge barrel. **DO NOT TILT** hydrometer.

Specific gravity of battery electrolyte strength of density varies not only with the quantity of the acid in solution but also with temperature. As temperature increases, the volume of the electrolyte expands and specific gravity is reduced. As temperature drops, electrolyte contracts and specific gravity increases.

Specific gravity variations caused by temperatures must be considered in the analysis of the battery, otherwise specific gravity readings will not give a true indication of the state of charge.

Use a battery immersion type thermometer of the mercury-in-glass type, having a scale reading as high as 125°F and designed for not over a 1-inch bulb immersion. A suitable dairy type thermometer may prove satisfactory for the purpose.

Draw electrolyte in and out of the hydrometer barrel several times to bring the temperature of the hydrometer float to that of the acid in the cell and then measure the electrolyte temperature in the cell.

The temperature correction in specific gravity reading at 80° Fahrenheit is zero. Add .004 specific gravity points for every 10 degrees over 80°F and subtract .004 specific gravity points for every 10 degrees under 80°F. All readings must be corrected to 80 degrees Fahrenheit. Refer to Figure 1 and examples one and two as follows:

Example 1—

Hydrometer Reading ..... 1.260
Acid Temperature 6..... 20 degrees Fahrenheit
Subtract Specific Gravity ..... .024
Correct Specific Gravity is ..... 1.236

Example 2—

Hydrometer Reading ..... 1.255
Acid Temperature ..... 100 degrees Fahrenheit
Add specific Gravity ..... .008
Corrected Specific Gravity is ..... 1.263

A fully charged relatively new battery has a specific gravity reading of 1.260 plus .015 minus .005 (all batteries for use in temperate climates).

## ADJUSTMENT OF ACID GRAVITY

Hydrometer floats usually are not calibrated below about 1.160 specific gravity and cannot indicate the condition of a battery in a very low state of charge. Therefore, it may be necessary to give the battery several hours charge before a hydrometer reading will indicate that the battery is taking a charge.

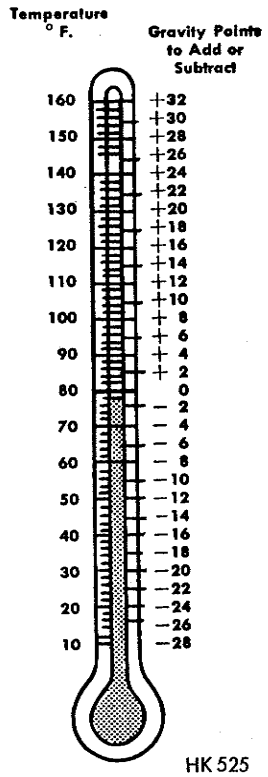


***Fig. 1—Hydrometer Reading Correction Chart***

MyMopar.com

If the specific gravity of all cells are not within .015 points of specified value, corrected to 80°F, at the end of a full charge, remove some of the electrolyte with hydrometer and add a like amount of distilled water to reduce the gravity if too high, or add 1.400 Specific Gravity acid to raise the specific gravity, if too low. Continue the charge so as to give the electrolyte a chance to mix and then read the gravity after another hour of charge to note the effect of the additions. Continue this adjusting procedure until the gravity is brought to the desired value by charging for one hour after each adjustment.

Never adjust the specific gravity of any battery cell which does not gas freely on charge. Unless electrolyte has been lost through spilling or leaking, it should not be necessary to add acid to a battery during its life. Acid should never be added unless one is certain that the cell will not come up to normal gravity by continued charging. Always make the temperature correction for hydrometer readings, as warm electrolyte will read low and this might be mistaken for failure of the battery to rise normally in gravity. It could also be falsely concluded that the battery would not take a full charge.

## HIGH RATE DISCHARGE TEST OF BATTERY CAPACITY

Satisfactory capacity tests can be made only when the battery equals or exceeds 1.220 specific gravity at 80 degrees Fahrenheit. If the reading is below 1.220 the battery should be slow charged until fully charged in order to secure proper test results.

### *Test Procedure*

(1) Turn control knob of the battery starter Tester to the **OFF** position.

(2) Turn Voltmeter Selector Switch to the 16 volt position on test units so equipped.

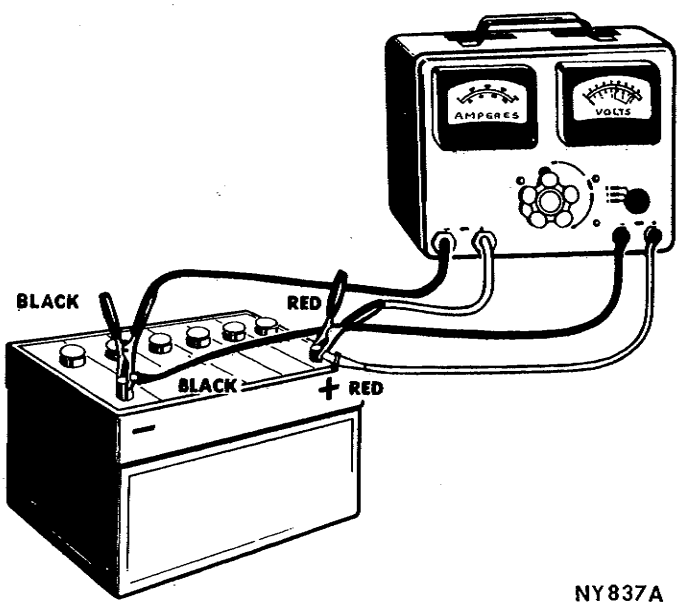


*Fig. 2—High Rate Discharge Test*

(3) Connect test ammeter and voltmeter positive leads to battery positive terminal. Connect the ammeter and voltmeter negative leads to battery negative terminal (Fig. 2). **The voltmeter clips must contact the battery posts or cable clamps and not the ammeter lead clips.**

(4) Turn the control knob clockwise until the ammeter reading is equal to three times the ampere hour rating of the battery.

(5) Maintain this load for 15 seconds; the voltmeter should read 9.5 volts or more, which will indicate that the battery has good output capacity.

(6) After the 15 second test, turn Battery-Starter-Tester control knob to the **OFF** position.

If the voltage in the "High Rate Discharge Test" was under 9.5 volt, the battery should be test charged to determine whether the battery can be satisfactorily charged.

## CHARGING THE BATTERY

### *Three Minute Charge Test (Fig. 3)*

**This test should not be used if battery temperature is below 60 degrees F.**

(1) Connect Battery Charger positive (+) lead to battery positive terminal and negative lead to battery negative terminal.

**IMPORTANT: Be sure of correct polarity when charging batteries.**

(2) Trip the Battery Charger Power Switch to **ON** position. Turn timer switch past three minute mark then back to the three minute mark.

(3) Adjust Battery Charger Switch to highest possible rate not exceeding 40 amperes.

(4) When timer switch cuts off at the end of 3 minutes, turn timer switch back to fast charge.

(5) Use the 16 volt scale of the Battery Starter Tester and measure total voltage of battery posts while battery is being fast charged. If total voltage during charge exceeds 15.5 volts, the battery is sulphated and should be cycled and slow-charged until specific gravity reaches 1.260 (See "Slow Charging").

**A slow charge is preferable to bring the battery up to a full charge.**

If specific gravity remains constant after testing battery at one hour intervals for three hours, battery is at its highest state of charge.

(6) Make another capacity test. If capacity test does not meet specifications, replace battery.

### *Fast Charging the Battery (Fig. 4)*

If adequate time for a slow charge is not available, a high rate (**FAST**) charge is permissible and will give a sufficient charge in one hour enabling the battery and alternator to continue to carry the electrical load.

Connect Battery Charger positive (+) lead to battery positive terminal and negative (—) lead to battery

MyMopar.com

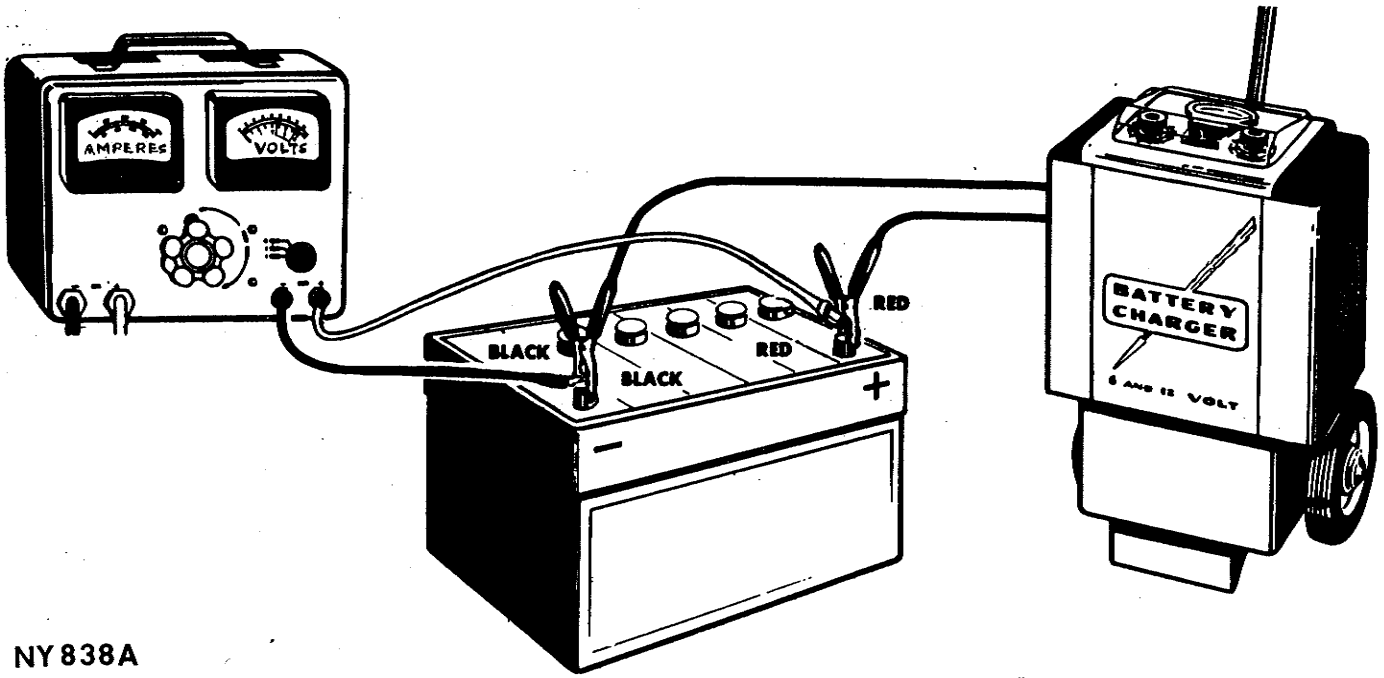


*Fig. 3—Three Minute Charge Test*

negative terminal. If battery is not removed from vehicle, **BE SURE** ignition switch is turned off and all electrical accessories are off during charging.

**CAUTION: The battery can be damaged beyond repair unless the following precautions are taken:**

(1) Battery electrolyte temperature must **NEVER** exceed 125 degrees Fahrenheit.

If this temperature is reached, the battery should be cooled by reducing charging rate or remove battery from the circuit.

(2) As batteries approach full charge electrolyte in each cell will begin to gas or bubble. Excessive gassing must not be allowed.

(3) Do not fast charge longer than one hour.

If the battery does not show a significant change in specific gravity after one hour of **"FAST"** charge, the slow charge method should be used.

Remember to use temperature correction when checking specific gravity.

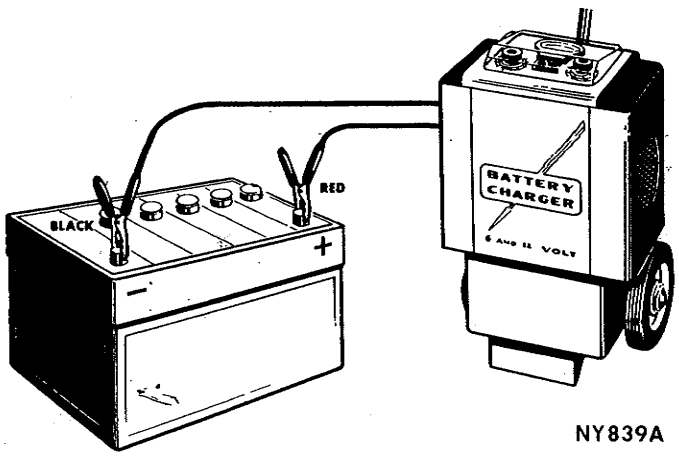


*Fig. 4—Fast Charging the Battery*

**The manufacturers of high rate charging equipment generally outline the necessary precautions and some models have thermostatic temperature limiting and time limiting controls.**

**WARNING: When batteries are being charged an explosive gas mixture forms beneath the cover of each cell. Do not smoke near batteries on charge or which have recently been charged. Do not break live circuits at the terminals of the batteries on charge. A spark will occur where the live circuit is broken. Keep all open flames away from the battery.**

### *Slow Charging Batteries*

Many discharged batteries can be brought back to good condition by slow charging, especially batteries that are sulphated.

Battery should be tested with a hydrometer and a record kept of the readings taken at regular intervals throughout the charge. When a cell has a specific gravity reading that is 25 points (.025) or more below other cells, that cell is faulty and battery should be replaced.

Safe slow charging rates are determined by allowing one ampere per positive plate per cell. Proper slow charging rate would be 4 amperes for a 48 ampere hour battery; 5 amperes for a 59 ampere hour battery; and 6 amperes for a 70 ampere hour battery.

Rate of charge for a normally discharged battery is one ampere per positive plate per cell.

The average length of time necessary to charge a battery by the slow charge method at normal rates is from 12 to 16 hours, however, when a battery continues to show an increase in specific gravity, battery

MyMopar.com

charge should be continued even if it takes 24 hours or more. **Watch the temperature of batteries carefully and if the temperature of any one of them reaches 110°F., lower the charging rate.**

Battery will be fully charged when it is gassing freely and when there is no further rise in specific gravity after three successive readings taken at hourly intervals. Make sure hydrometer readings are corrected for temperature.

The rate of charge for a sulphated battery should be no more than ½ the normal slow charge rate. Many sulphated batteries can be brought back to a useful condition by slow charging at half the normal charging rate from 60 to 100 hours. This long charging cycle is necessary to reconvert crystalline lead sulphate into active materials.

Batteries that are sulphated have the following characteristics:

(1) Battery temperature tends to increase rapidly while charging.

(2) Gravity under charge increases very slowly or not at all.

(3) Battery will gas excessively under normal charging rate.

(4) Excessive voltage required to obtain normal charging rate. **When a battery takes a full charge, but is returned several times in need of a recharge, check for a cracked cell partition with a syringe to provide air pressure; bubbles will appear in an adjacent cell if a crack is present.**

# REDUCTION GEAR STARTER

## INDEX


| | Page |
|---|---|
| Amperage Draw Test | 7 |
| Armature Testing | |
| Test for Short Circuit | 11 |
| Test for Ground | 11 |
| Test Commutator for Runout | 11 |
| Assembling the Starter | 12 |
| Brushes and Springs Replacement | 11 |
| Bushings Replacement | 12 |
| Cleaning the Starter Parts | 10 |
| Disassembly | 8 |
| Field Coils Replacement | 12 |
| Field Coils Testing | 11 |
| General Information | 5 |
| Ground Circuit Test | 8 |
| Insulated Circuit Test | 8 |
| Installing the Starter | 16 |
| Removing the Starter | 8 |
| Replacement of Brushes and Springs | 11 |
| Resistance and Current Draw Testing | 7 |
| Starter Clutch Unit Servicing | 12 |
| Service Diagnosis | 5 |
| Servicing the Bushings | 12 |
| Servicing the Starter Clutch Unit | 12 |
| Specifications | 89 |
| Starter Amperage Draw Test | 7 |
| Starter Ground Circuit Test | 8 |
| Starter Resistance Test | 7 |
| Testing the Starter (Bench Test) | 8 |
| Free Running Test | 8 |
| Locked-Resistance Test | 8 |
| Testing Armature | |
| Testing Armature for Ground | 11 |
| Testing Armature for Short Circuit | 11 |
| Testing Commutator Runout | 11 |
| Testing Field Coils for Ground | 11 |


## GENERAL INFORMATION

The starter has an armature-to-engine crankshaft ratio of 45 to 1: a 3.5 to 1 reduction gear set is built into the starter assembly, which is housed in an aluminum die casting, (Fig. 1). The starter utilizes a solenoid shift device, the housing of the solenoid is integral with the starter drive end housing.

| Condition | Possible Cause | Correction |
|---|---|---|
| **STARTER FAILS TO OPERATE** | (a) Weak battery or dead cell in the battery. | (a) Test specific gravity. Recharge or replace battery as required. |
| | (b) Ignition switch faulty. | (b) Test and replace the switch if necessary. |
| | (c) Loose or corroded battery cable terminals. | (c) Clean terminals and clamps, replace if necessary. Apply a light film of petrolatum to terminals after tightening. |
| | (d) Open circuit, wire between the ignition—starter switch and ignition terminal on starter relay. | (d) Inspect and test all the wiring. |
| | (e) Inoperative clutch unit. | (e) Replace the clutch unit. |
| | (f) Faulty starting motor. | (f) Test and repair as necessary. |
| | (g) Armature shaft sheared. | (g) Test and repair. |
| | (h) Open solenoid pull-in wire. | (h) Test and replace solenoid if necessary. |

MyMopar.com

| Condition | Possible Cause | Correction |
|---|---|---|
| **STARTER FAILS AND LIGHTS DIM** | (a) Weak battery or dead cell in the battery. | (a) Test for specified gravity. Recharge or replace battery as required. |
| | (b) Loose or corroded battery cable terminals. | (b) Clean the terminals and clamps, replace if necessary. Apply a light film of petrolatum to terminals after tightening. |
| | (c) Internal ground in windings. | (c) Test and repair starter. |
| | (d) Grounded starter fields. | (d) Test and repair starter. |
| | (e) Armature rubbing on pole shoes. | (e) Test and repair starter. |
| **STARTER TURNS, BUT PINION DOES NOT ENGAGE** | (a) Starter clutch slipping. | (a) Replace the clutch unit. |
| | (b) Broken teeth on flywheel drive gear. | (b) Replace the flywheel ring gear. Inspect teeth on the starter clutch pinion gear. |
| | (c) Pinion shaft rusted, dirty or dry, due to lack of lubrication. | (c) Clean, test and lubricate. |
| | (d) Wrong starter pinion clearance. | (d) Adjust pinion clearance on straight-through drive starters. |
| **STARTER RELAY DOES NOT CLOSE** | (a) Battery discharged. | (a) Recharge or replace battery. |
| | (b) Faulty wiring. | (b) Test for open circuit, wire between the starter relay ground terminal post and neutral starter switch (automatic transmission only). Also test for open circuit; wire between ignition-starter relay. |
| | (c) Neutral starter switch on automatic transmission faulty. | (c) Test and replace the switch if necessary. |
| | (d) Starter relay faulty. | (d) Test and replace if necessary. |
| **RELAY OPERATES BUT SOLENOID DOES NOT** | (a) Faulty wiring. | (a) Test for open circuit wire between starter-relay solenoid terminal and solenoid terminal post. |
| | (b) Faulty solenoid switch or connections. | (b) Test for loose terminal connections between solenoid and starter field. |
| | (c) Solenoid switch contacts corroded. | (c) Test and replace solenoid if necessary. |
| | (d) Broken lead or a loose soldered connection inside solenoid switch (brush holder plate). | (d) Test and replace solenoid if necessary. |
| **SOLENOID PLUNGER VIBRATES BACK AND FORTH WHEN SWITCH IS ENGAGED** | (a) Battery low. | (a) Test for specific gravity of battery. Replace or recharge battery. |
| | (b) Faulty wiring. | (b) Test for loose connections at relay, ignition-starter switch and solenoid. |
| | (c) Lead or connections broken inside solenoid switch cover (brush holder plate) or open hold-in winding. | (c) Test and replace solenoid if necessary. |
| | (d) Check for corrosion on solenoid contacts. | (d) Test and clean the contacts. |
| **STARTER OPERATES BUT WILL NOT DISENGAGE WHEN THE IGNITION-STARTER SWITCH IS RELEASED** | (a) Broken solenoid plunger spring or spring out of position. | (a) Test and repair. |
| | (b) Faulty ignition-starter switch. | (b) Test and replace the switch if necessary. |
| | (c) Solenoid contact switch plunger stuck in solenoid. | (c) Remove the contact switch plunger, wipe clean of all dirt, apply a film of SAE 10 oil on plunger, wipe off excess. |
| | (d) Insufficient clearance between winding leads to solenoid terminal and main contactor in solenoid. | (d) Test and repair. |
| | (e) Faulty relay. | (e) Test and replace relay if necessary. |

MyMopar.com

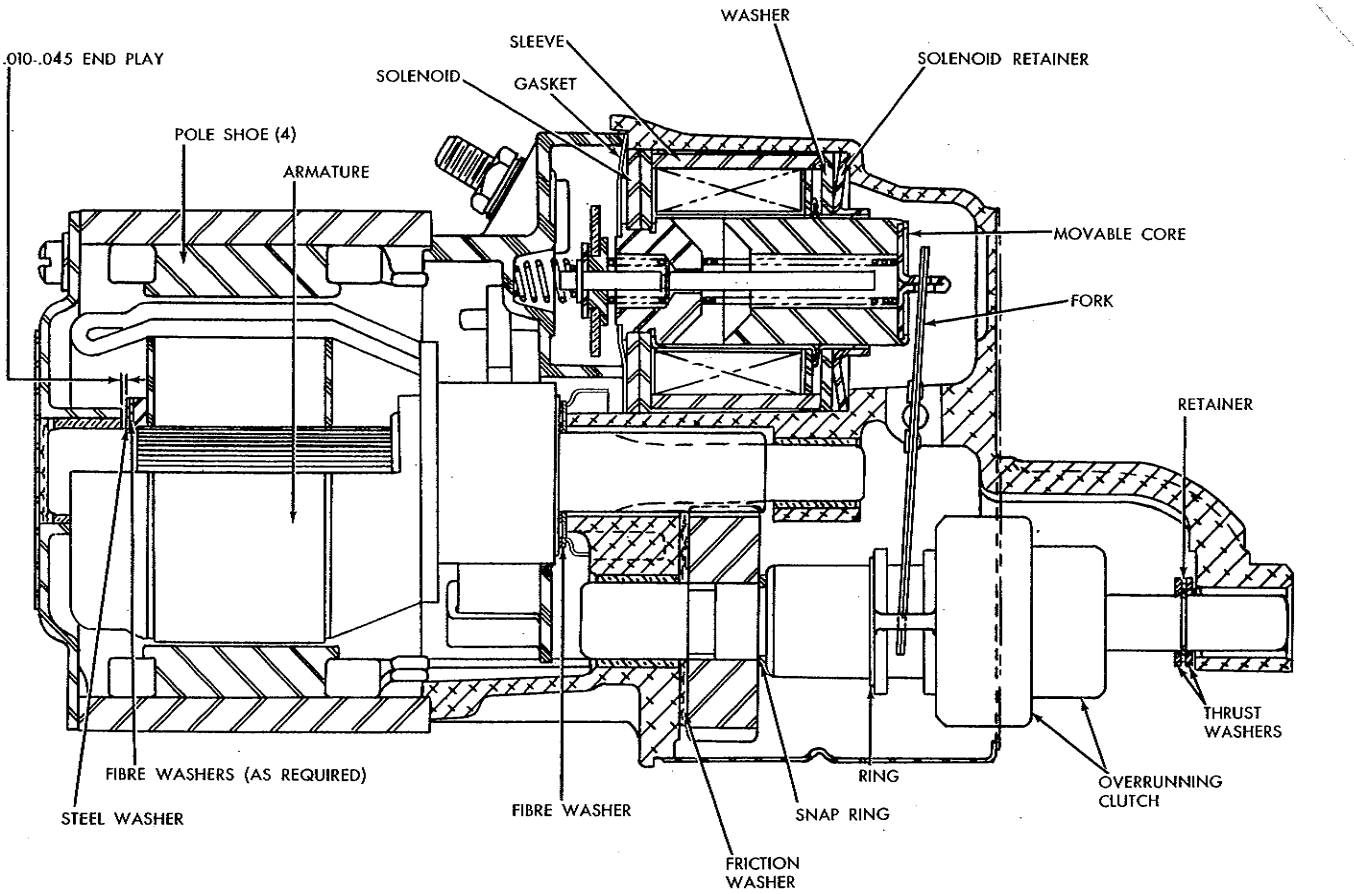


***Fig. 1—Starter Cross Section***

## SERVICE PROCEDURES

### STARTER AMPERAGE DRAW TEST (with BST 11, BST-10, or BST-5 Tester)

Check battery electrolyte gravity with a reliable hydrometer. Gravity should be not less than 1.220 (temperature corrected). Or see that battery passes the High Rate Discharge Test shown in the "Battery" section of this manual.

Turn Battery—Starter Tester **CONTROL KNOB** to "OFF" position.

Turn voltmeter Selector Switch to 16 Volt position. Connect heavy **Positive** ammeter lead (Red) to **Positive** battery terminal. Connect heavy **Negative** ammeter lead (Black) to **Negative** battery terminal.

Connect **Positive** voltmeter lead (Red) to **Positive** battery terminal. Connect **Negative** voltmeter lead (Black) to **Negative** battery terminal.

**DISCONNECT** ignition primary lead from ignition ballast resistor, or primary wire from either side of coil, to prevent engine from starting.

Crank engine with a remote control starter switch and observe **Exact** reading on Voltmeter. Stop cranking engine. Without cranking engine, turn tester **CONTROL KNOB** clockwise until voltmeter reads **Exactly** the same as when engine was being cranked with the remote control starter switch. Ammeter now indicates starter amperage draw. Check specifications. **Engine should be up to operating temperature. Extremely heavy oil or a tight engine will increase starter amperage draw.**

### STARTER RESISTANCE TEST

(1) Test battery electrolyte specific gravity. Specific gravity should be 1.220 or above.

(2) Disconnect positive battery lead from battery terminal post. Connect a 0 to 300 scale ammeter between disconnected lead and battery terminal post.

(3) Connect a test voltmeter with 10 volt scale division between battery positive post and the starter switch terminal at starter solenoid.

(4) Crank engine and observe reading on voltmeter and ammeter. Voltage should not exceed .3 volt. A

MyMopar.com

that exceeds .3 volt indicates there caused from loose circuit connec-e, burned starter relay or burned tacts. A current that is high and is cranking speed, indicates starter should be removed and repaired.

## STARTER GROUND CIRCUIT TEST

(1) Connect test voltmeter positive lead to starter housing and voltmeter negative lead to battery negative post.

(2) Crank the engine with a remote control starter switch and observe voltmeter reading. Voltmeter reading should not exceed .2 volt. A reading of .2 volt or less indicates the resistance of the ground cable and connections is normal. If voltmeter reading is more than .2 volt, it indicates excessive voltage loss in starter ground circuit. Make the following tests to isolate point of excessive voltage loss. Repeat test at each connection.

(a) Starter drive housing.
(b) Cable terminal at engine.
(c) Cable clamp at the battery.

A small change will occur each time a normal portion of circuit is removed from test. A definite change in voltmeter reading indicates that last part eliminated in test is at fault.

Maximum allowable voltage loss is as follows:

| | |
|---|---|
| Battery ground cable | .2 volt |
| Engine ground circuit | .1 volt |
| Each connection | .0 volt |

## STARTER INSULATED CIRCUIT TEST

(1) Test battery electrolyte specific gravity. Specific gravity should be 1.220 or above. If battery specific gravity is below 1.220, recharge battery to full charge before proceeding with test.

(2) Turn voltmeter selector switch to 4 volt position.

(3) Disconnect ignition coil secondary cable.

(4) Connect voltmeter positive lead to battery positive post and voltmeter negative lead to solenoid connector which connects to the starter field coils.

The voltmeter will read off scale to the right until starter is actuated.

(5) Connect remote control switch to battery and solenoid terminal of starter relay.

(6) Crank engine with a remote starter control starter switch and observe voltmeter reading. Voltmeter reading should not exceed .3 volt. A voltmeter reading of .3 volt or less indicates voltage drop is normal in cables, starter relay switch solenoid switch and connections between battery and starter motor. See "Starter Ground Circuit Test."

If voltmeter reading is more than .3 volt, it indicates high resistance in starter insulated circuit. Make following tests to isolate point of excessive voltage loss:

(A) Remove voltmeter lead from solenoid connector and connect to the following points, repeating test at each connection. Starter terminal of solenoid, battery terminal of solenoid, battery cable terminal at solenoid, starter relay and cable clamp at the battery.

(B) A small change will occur each time a normal portion of the circuit is removed from test. A definite change in the voltmeter reading indicates that the last part eliminated in test is at fault.

Maximum allowable voltage loss is as follows:

| | |
|---|---|
| Battery insulated cable | .2 volt |
| Solenoid switch | .1 volt |
| Each connection | .0 volt |

Replace faulty cables. Clean and tighten all connections.

## REMOVING THE STARTER

(1) Disconnect ground cable at battery
(2) Remove cable at starter.
(3) Disconnect solenoid lead wires at solenoid terminals.
(4) Remove one stud nut and one bolt attaching the starter to flywheel housing, slide the automatic transmission oil cooler tube bracket off the stud (if so equipped) and remove the starter.

## TESTING THE STARTER
### (Bench Test)

#### *Free Running Test*

(1) Place starter in a vise and connect a fully charged, 12 volt battery to starter as follows:

(a) Connect a test ammeter (100 amperes scale) and a carbon pile rheostat in series with battery positive post and starter terminal.

(b) Connect a voltmeter (15 volt scale) across starter.

(c) Rotate carbon pile to full-resistance position.

(d) Connect battery cable from battery negative post to starter frame.

(e) Adjust the rheostat until battery voltage shown on voltmeter reads 11 volts. Amperage draw should be as shown in specifications.

#### *Locked-Resistance Test*

(1) Install starter in a test bench.

(2) Follow instructions of test equipment manufacturer and test starter against following specifications with applied battery voltage adjusted to 4 volts. Amperage draw should be as shown in specifications.

## SERVICING THE STARTER

#### *Disassembly*

(1) Place starter gear housing in a vise equipped with soft jaws. Use the vise as support fixture only. **DO NOT** clamp.

(2) Remove two through bolts and starter end head assembly.

MyMopar.com

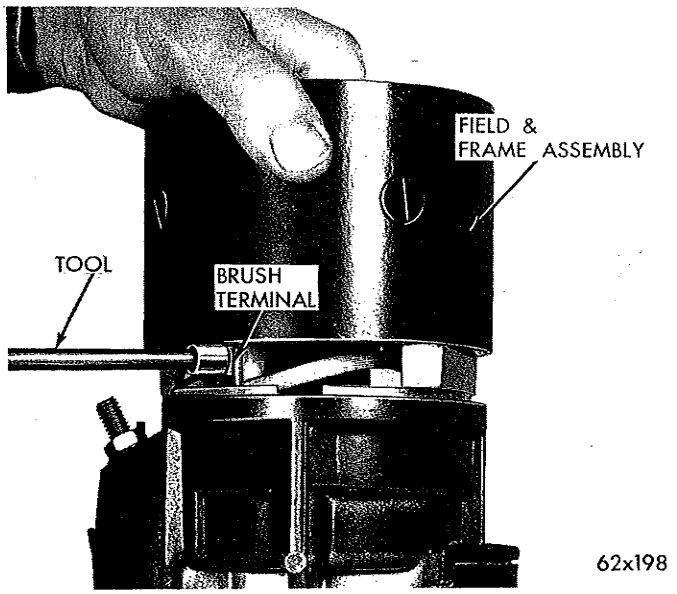


*Fig. 2—Removing or Installing Brush Terminal Screw*

(3) Carefully pull armature up and out of gear housing and starter frame and field assembly. Remove steel and fiber thrust washer.

**The wire of shunt field coil is soldered to the brush terminal. One set of brushes is connected to this terminal. The other pair of brushes is attached to the series field coils by means of a terminal screw. Carefully pull frame and field assembly up just enough to expose terminal screw and solder connection of shunt field at brush terminal. Place two wood blocks between starter frame and starter gear housing to facilitate removal of terminal screw, (Fig. 2).**

(4) Support brush terminal by placing a finger behind the terminal and remove terminal screw.

(5) Unsolder shunt field coil lead from starter brush terminal, (Fig. 3). The 4 series coil starters do not have a wire soldered at the brush terminal.

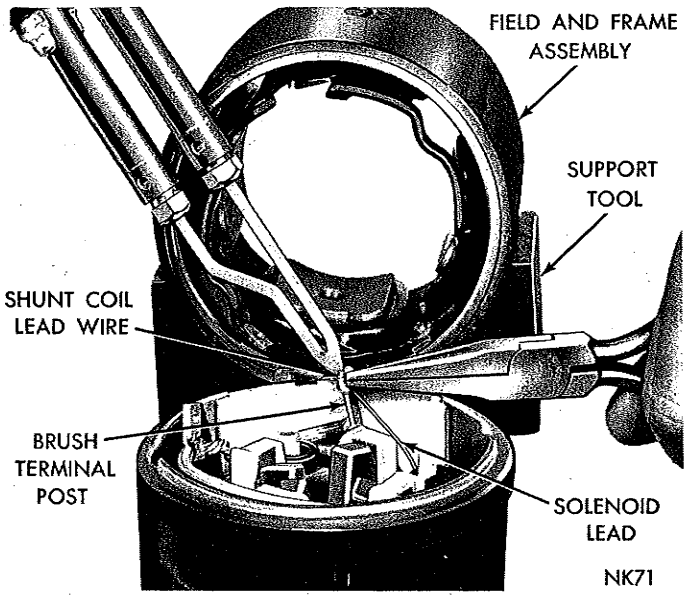


*Fig. 3—Unsoldering Shunt Coil Lead Wire*

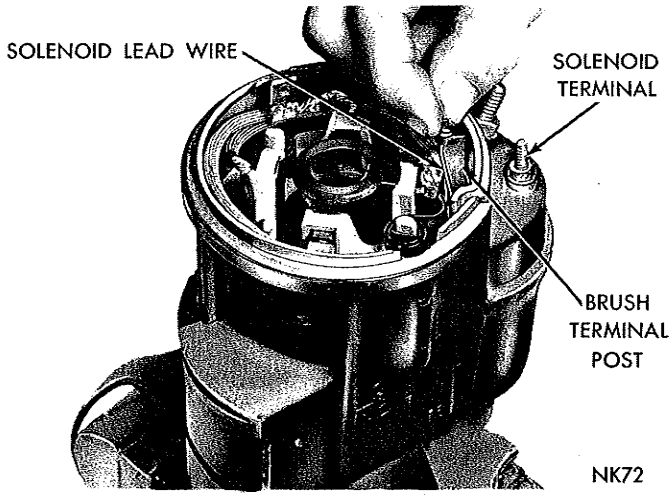


*Fig. 4—Unwinding or winding Solenoid Lead Wire*

**The starter brush holder plate with starter brush terminal, contact and brushes is serviced as an assembly.**

(6) Remove all old sealer at brush holder plate and gear housing.

(7) Unsolder solenoid lead wire and unwind wire from starter brush terminal (Fig. 4).

**The 4 series coil starters do not have a wire soldered at the brush terminal.**

(8) Remove screw attaching brush holder plate to starter gear housing (Fig. 5).

(9) Remove nut (11/32″ wrench), steel washer and insulating washer from solenoid terminal.

(10) Straighten solenoid wire and remove brush holder plate with brushes as an assembly.

(11) Remove solenoid assembly from gear housing well (Fig. 6).

(12) Remove nut, steel washer and sealing washer from starter battery terminal.

(13) Remove starter battery terminal from holder

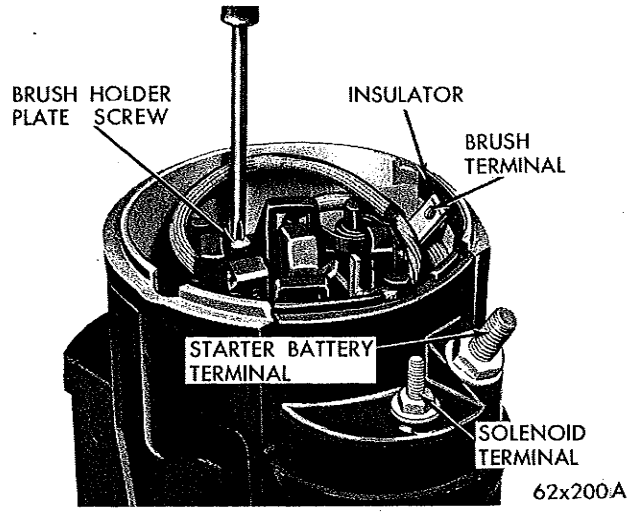


*Fig. 5—Removing or Installing Brush Holder Plate Screw*

MyMopar.com

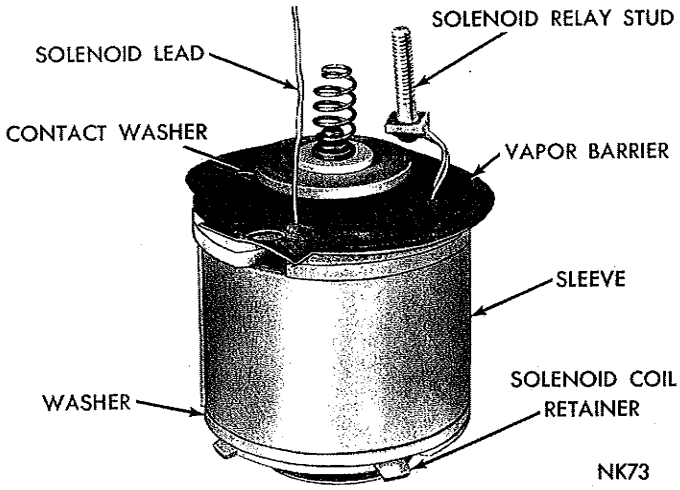


*Fig. 6—Solenoid Assembly Removed*

plate.

(14) Remove solenoid contact and plunger from solenoid.

(15) Remove solenoid return spring from well of solenoid housing moving core.

(16) Remove dust cover from gear housing, as shown in Figure 7.

(17) Remove retainer that positions the driven gear on pinion shaft (Fig. 8).

**CAUTION: Retainer is under tension and a cloth should be placed over the retainer to prevent it from springing away after removal.**

(18) Remove retainer ring at front of pinion shaft (Fig. 9).

**Do not spread retainer ring any greater than outside diameter of pinion shaft otherwise the retainer ring can be damaged.**

(19) Push pinion shaft towards rear of housing (Fig. 10) and remove snap ring and thrust washers, clutch and pinion assembly, with the two shifter fork nylon actuators as an assembly (Fig. 11).

(20) Remove driven gear and friction washer.

(21) Pull shifting fork forward and remove solenoid moving core (Fig. 12).

(22) Remove shifting fork retainer pin (Fig. 13) and remove clutch shifting fork assembly.

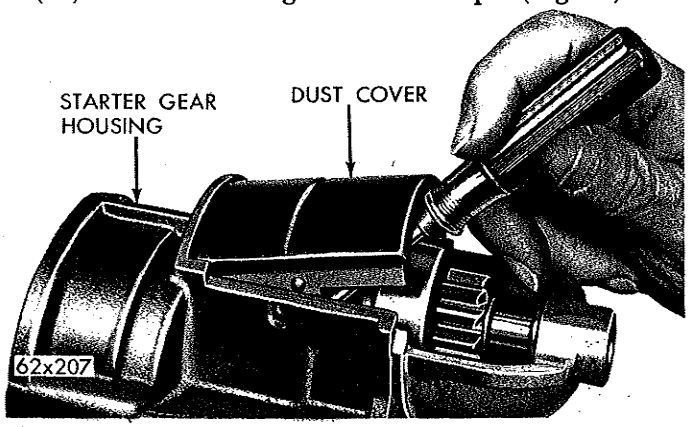


*Fig. 7—Removing Dust Cover*

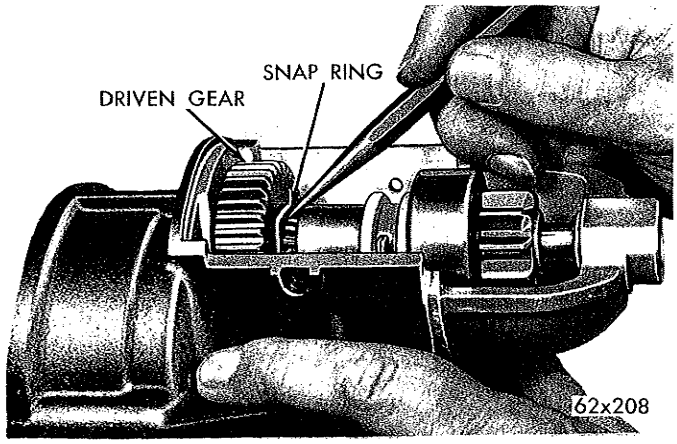


*Fig. 8—Removing Driven Gear Snap Ring*

## CLEANING THE STARTER PARTS

(1) Do not immerse parts in a cleaning solvent. Immersing field frame and coil assembly and/or armature will damage insulation. Wipe these parts with a clean cloth **only.**

(2) Do not immerse clutch unit in cleaning solvent. The clutch is pre-lubricated at the factory and solvent will wash lubricant from the clutch.

(3) The starter-clutch outer housing and pinion gear may be cleaned with a cloth moistened with a cleaning solvent and wiped dry with a clean dry cloth.

(4) Unsolder solenoid lead wires from the solenoid terminal relay stud.

(5) Clean all corrosion from solenoid assembly (washers, sleeve and retainer and inside of solenoid housing). These metal parts are part of solenoid holding ground circuit and must be clean.

(6) Clean terminal contacts and contactor with crocus cloth.

(7) Thoroughly clean outside area of brush plate to

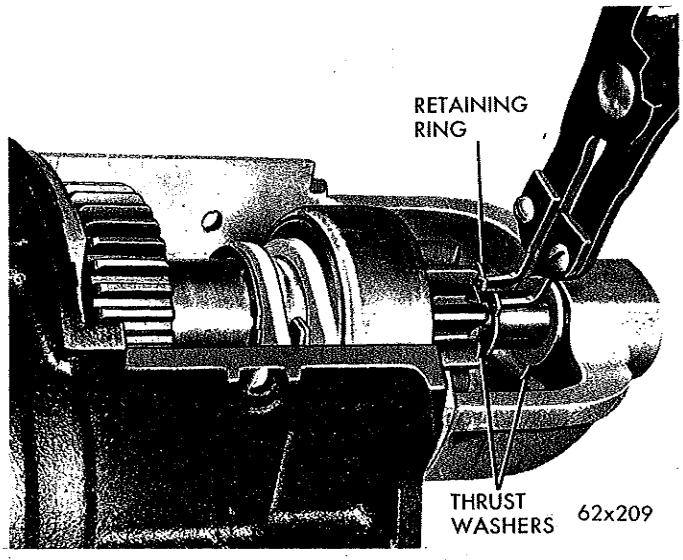


*Fig. 9—Removing or Installing the Pinion Shaft Retainer Ring*

MyMopar.com

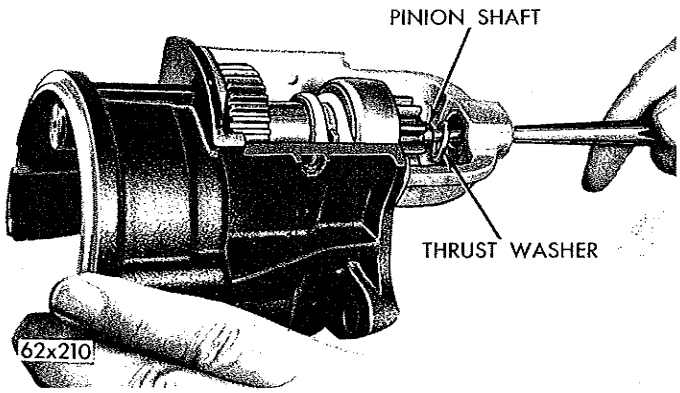


*Fig. 10—Removing Pinion Shaft*

remove all oil and dirt.

## REPLACEMENT OF BRUSHES AND SPRINGS

(1) Brushes that are worn more than ½ the length of new brushes, or are oil-soaked, should be replaced.

(2) When resoldering the shunt field and solenoid lead, make a strong low resistance connection using a high temperature solder and resin flux. **Do not use acid** or acid core solder. **Do not** break the shunt field wire units, if so equipped, when removing and installing brushes.

(3) Measure brush spring tension with a spring scale hooked under the spring near the end. Pull the scale on a line parallel to the edge of brush and take a reading just as spring end leaves the brush. Spring tension should be 32 to 36 ounces. Replace springs that do not meet specifications.

## TESTING ARMATURE

### *Testing Armature for Short Circuit*

Place armature in growler and hold a thin steel blade parallel to the core and just above it, while slowly rotating armature in growler. A shorted armature will cause blade to vibrate and be attracted to the core. Replace armature if shorted.

### *Testing Armature for Ground*

Contact armature shaft and each of the commutator riser bars with a pair of test lamp test prods. If lamp lights, it indicates a grounded armature. Replace grounded armature.

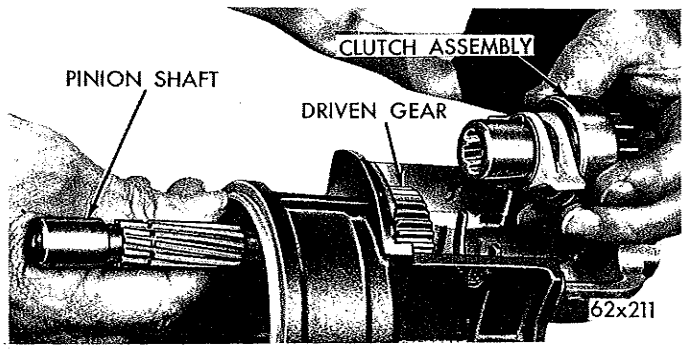


*Fig. 11—Removing or Installing Clutch Assembly*

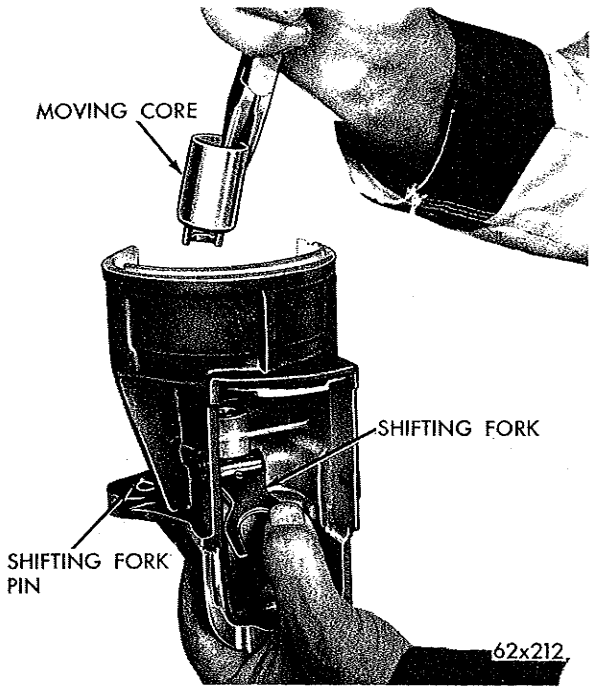


*Fig. 12—Removing or Installing Moving Core*

### *Testing Commutator Runout, Refacing and Undercutting*

Place armature in pair of "V" blocks and measure runout with dial indicator. Measure both shaft and commutator. A bent shaft requires replacement of armature. When commutator runout exceeds .003 inch, commutator should be refaced. Remove only a sufficient amount of metal to provide a smooth, even surface.

### *Testing The Field Coils for Ground*

(1) Remove field frame assembly from starter.

(2) Carefully drill out the rivet attaching the series

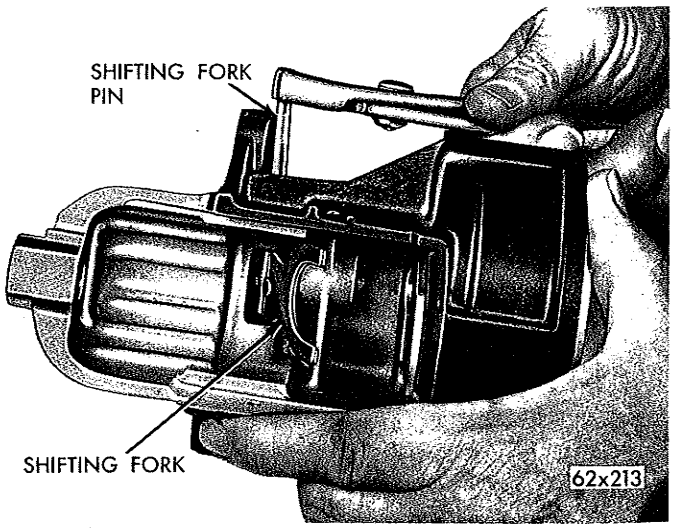


*Fig. 13—Removing or Installing Shifting Fork Pin*

MyMopar.com

field coil ground lead and the shunt field coil lead to field frame.

(3) Insulate field coil leads from field frame.

(4) Test for ground using a 110 volt test lamp. Touch one probe of test lamp to series field coil lead and other probe to field frame. Lamp should not light. Repeat procedure for shunt field coil.

If lamp lights, it indicates that field coils are grounded and require replacement.

## REPLACING FIELD COILS

A pole shoe impact screwdriver Tool C-3475 should be used to remove and install field coils to prevent damage to pole shoe screws and for proper tightening. Pole shoes that are loose and not properly seated may cause armature core to rub on pole shoes. This will decrease starter efficiency and damage armature core. **Make sure area between the leads and starter frame is clean. Peen new rivet securely to insure a good electrical contact.**

## SERVICING THE STARTER BUSHINGS

Inspect armature shaft bearing and pinion shaft surfaces and bushings for wear. Try the bushings for wear by inserting the shafts and test for side play.

**Pre-sized starter bushings are available as service bushings. Use Tool C-3944 to remove old bushings and install the new. No burnishing or reaming is required to fit pre-sized bushings.**

The C-3944 Tool and its adaptors are designed to service all of the gear reduction motor bushings with the exception of the end head bushing. End head bushing and end head are serviced as an assembly.

Remove and install bushings, Figs. 14 through 17.

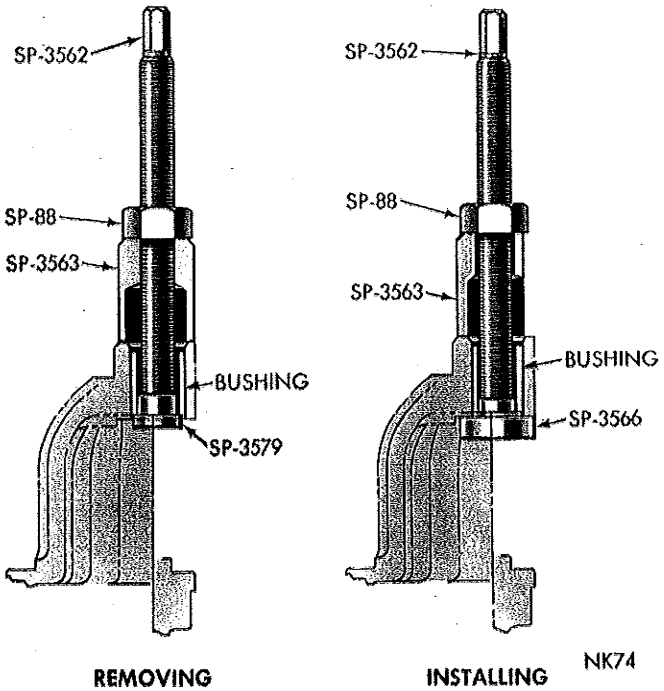


*Fig. 14—Removing and Installing Pinion Housing End Bushing*

## SERVICING THE STARTER CLUTCH UNIT

Do not immerse starter clutch unit in a cleaning solvent. Starter clutch is pre-lubricated at the factory and a solvent will wash lubricant from the clutch.

The starter clutch outer housing and pinion gear may be cleaned with a cloth moistened with cleaning solvent and wiped dry with a clean dry cloth.

Rotate the pinion. Pinion gear should rotate smoothly in one direction (not necessarily easily), but should not rotate in opposite direction. If starter clutch unit does not function properly, or pinion is worn, chipped or burred, replace starter clutch unit.

## ASSEMBLING THE STARTER (Fig. 16)

**The shifter fork consists of two spring steel plates assembled with two rivets. There should be approximately 1/16 inch side movement as shown in Figure 18 to insure proper pinion gear engagement. Lubricate between the plates sparingly with SAE 10 engine oil.**

(1) Position shifter fork in drive housing and install shifting fork retainer pin. One tip of pin should be straight, other tip should be bent at a 15 degree angle away from the housing. The fork and retainer pin should operate freely after bending tip of pin.

(2) Install solenoid moving core and engage shifting fork. Refer to Figure 12.

(3) Enter pinion shaft into drive housing, and install friction washer and drive gear.

(4) Install clutch and pinion assembly, thrust washer, retaining ring and thrust washer. Refer to Figure 11.

(5) Complete installation of pinion shaft engaging shifting fork with clutch actuators. Figure 19 shows the correct relation of the parts at assembly. **The friction washer must be positioned on the shoulder of splines of the pinion shaft before driven gear is positioned.**

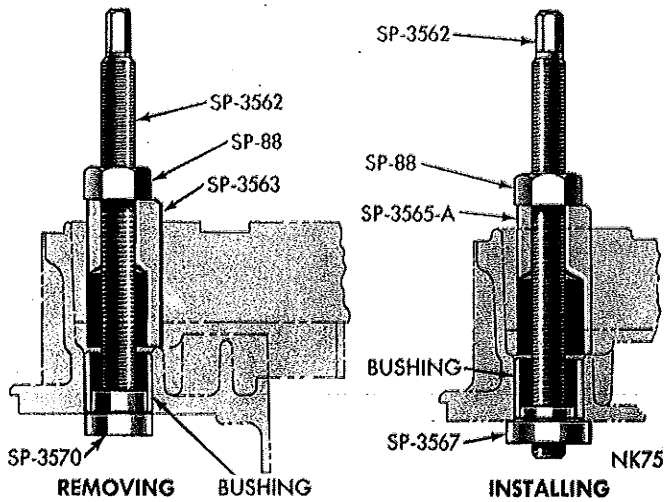


*Fig. 15—Removing and Installing Pinion Housing Drive Shaft Bushing*

MyMopar.com

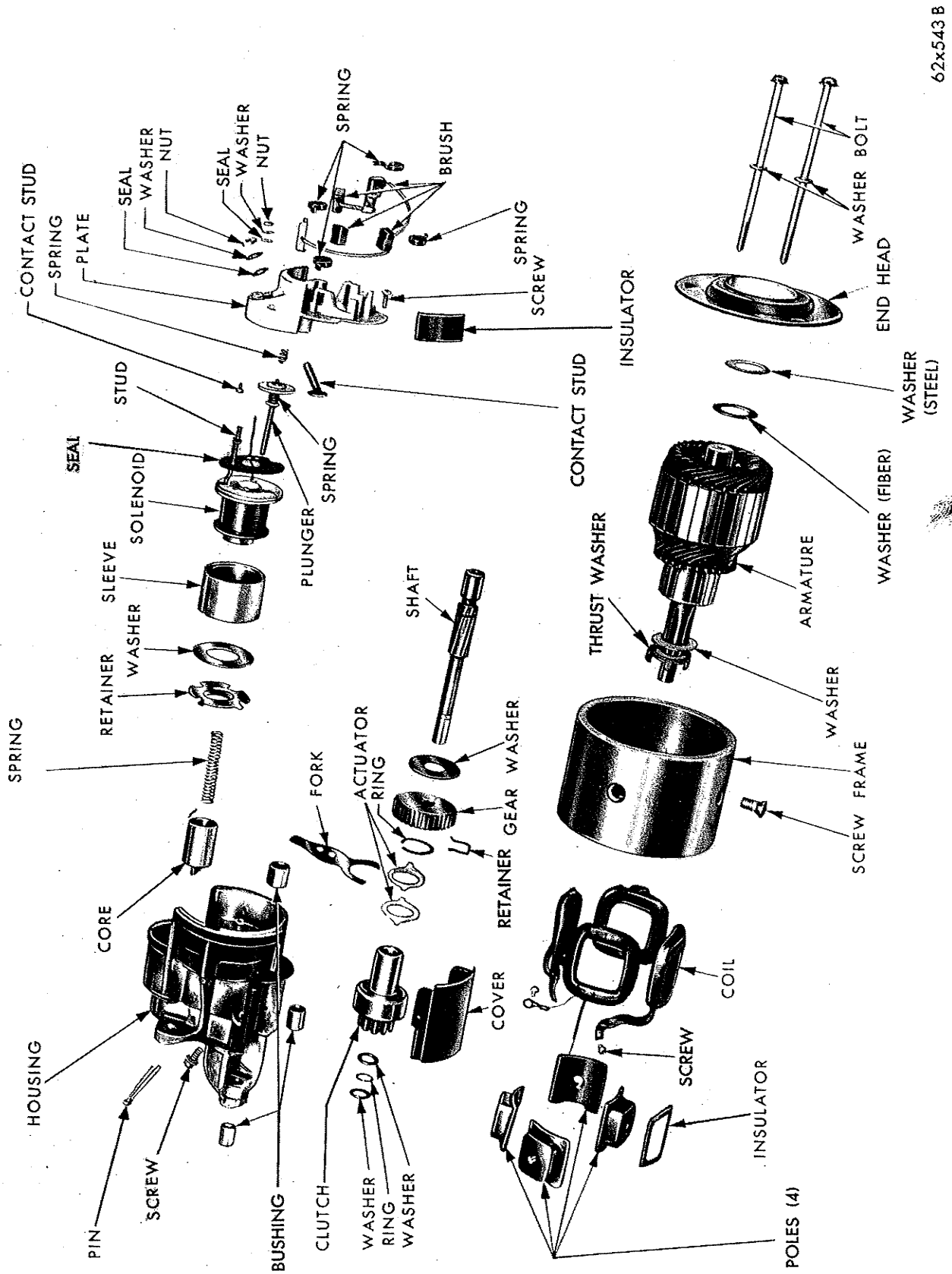


*Fig. 16—Starter (Exploded View)*

MyMopar.com

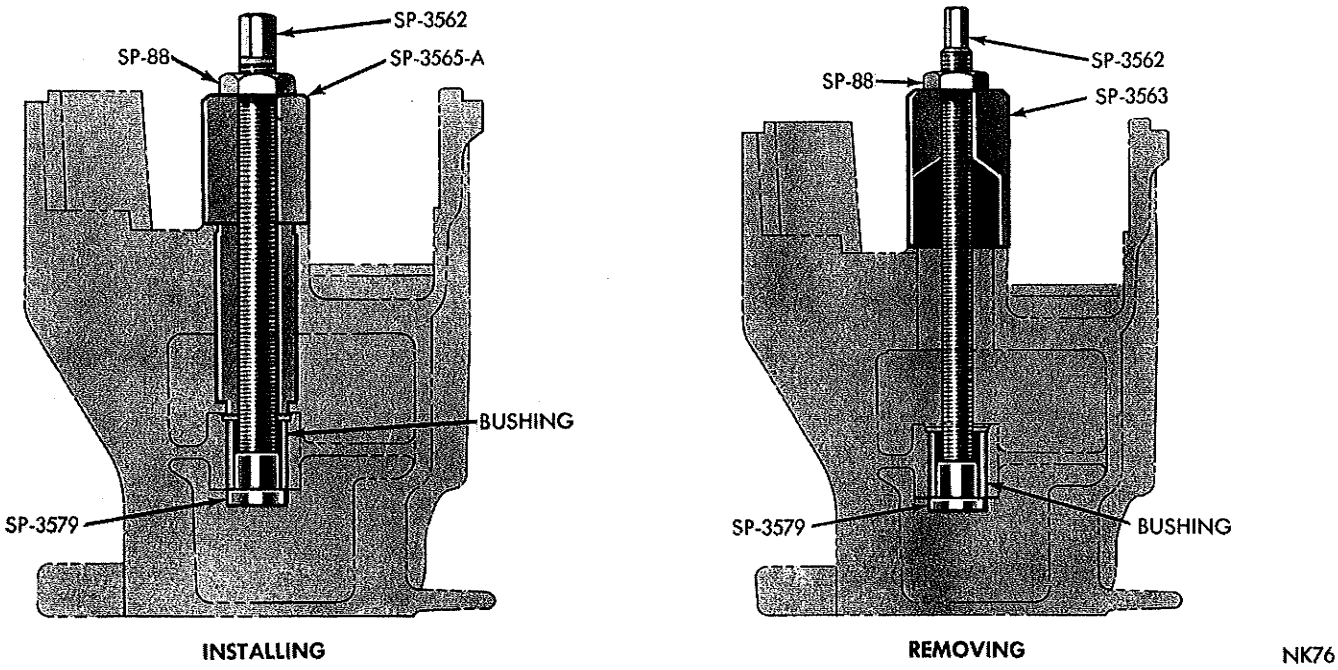


***Fig. 17—Removing and Installing Pinion Housing Armature Shaft Bushing***

(6) Install driven gear snap ring (Fig. 8).

(7) Install pinion shaft retaining ring (Fig. 9).

(8) Bend the four (4) tangs of coil retainer "up" to a measurement of 5/32 to 3/16" above surface of retainer (Fig. 20), to ensure higher compression and a more positive ground.

**Space the retainer in housing bore so that the four tangs rest on the ridge in housing bore and not in the recesses.**

(9) Install starter solenoid return spring into bore of moving core.

(10) Install solenoid contact seal over solenoid lead wires, inserting double wires of terminal stud into large hole (Fig. 6) and solenoid winding lead wire into the small hole.

**Inspect condition of starter solenoid switch contacting washer, if top of washer is burned from arcing, disassemble contact switch plunger assembly and reverse the washer.**

(11) Install solenoid contact plunger assembly into solenoid and reform double wires to allow for proper entry of terminal stud into brush holder with the double wires curved around the contactor.

**CAUTION: The contactor must not touch the double wires when solenoid is energized after assembly is completed (Fig. 6).**

**Make sure contact spring is positioned on the shaft of the solenoid contact plunger assembly.**

(12) Assemble battery terminal stud in brush holder, placing sealing washer under plain washer.

**Inspect condition of the contacts in brush holder plate. If contacts are badly burned, replace brush holder with brushes and contacts as an assembly.**

(13) Enter solenoid lead wire through hole in brush holder (Fig. 21) and install solenoid stud, insulating

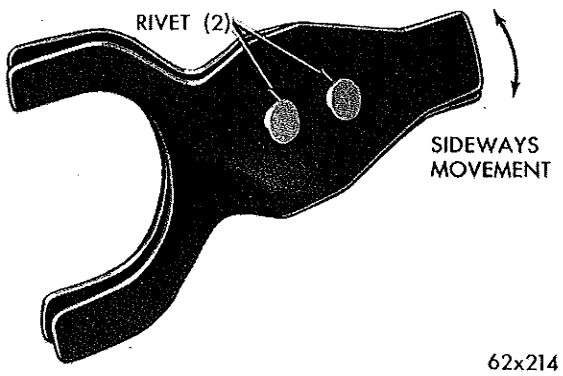


***Fig. 18—Shifter Fork Assembly***

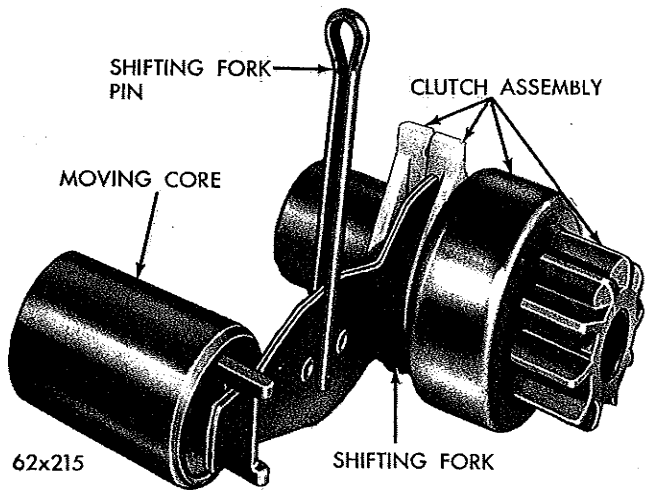


***Fig. 19—Shifter Fork and Clutch Arrangement***

MyMopar.com

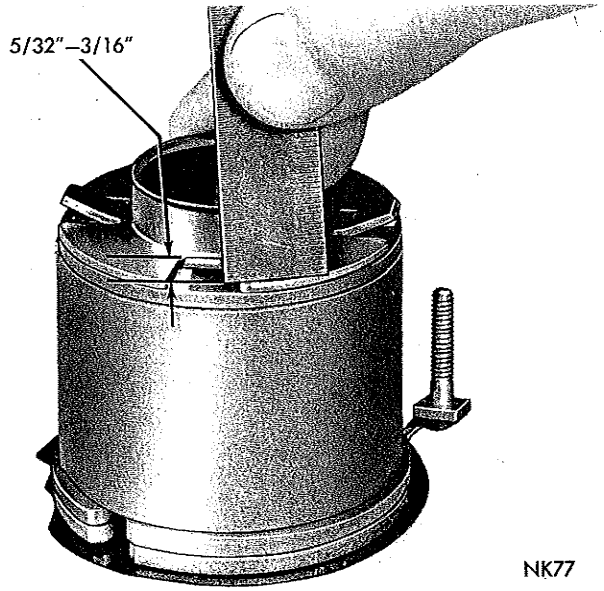


***Fig. 20—Checking Height of Solenoid Coil Retainer Tangs***

washer, flat washer and nut.

**Use care when installing solenoid contact seal over tab on brush plate to prevent tearing the seal.**

(14) Wrap solenoid lead wire tightly around brush terminal post (Fig. 22) and solder securely with a high temperature resin core solder and resin flux.

(15) Carefully enter solenoid coil and brush plate assembly into bore of gear housing and position brush plate assembly into starter gear housing. Align tongue of ground terminal with notch in brush holder (Fig. 23).

(16) After the brush holder is bottomed in housing, install attaching screw (Fig. 4). Tighten screw to 10-15 inch-pounds. Make sure the insulating tape is in position (Fig. 4).

(17) Position brushes with armature thrust washer, (Fig. 22). This will hold brushes out and facilitate proper installation of armature.

(18) On starters so equipped, solder shunt coil lead wire to starter brush terminal (Fig. 24).

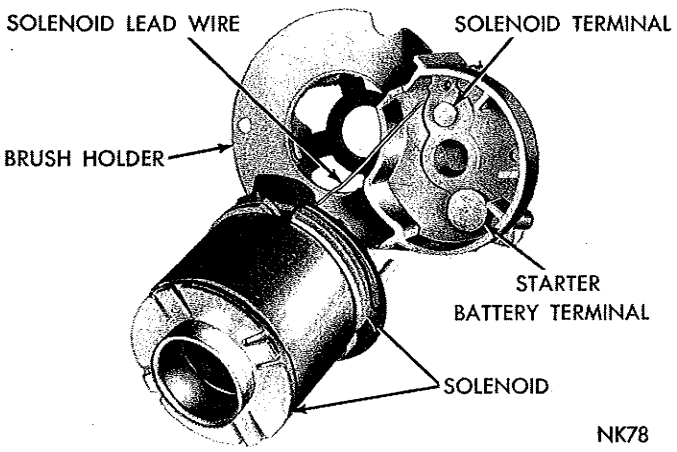


***Fig. 21—Assembling Solenoid to Brush Holder Plate***

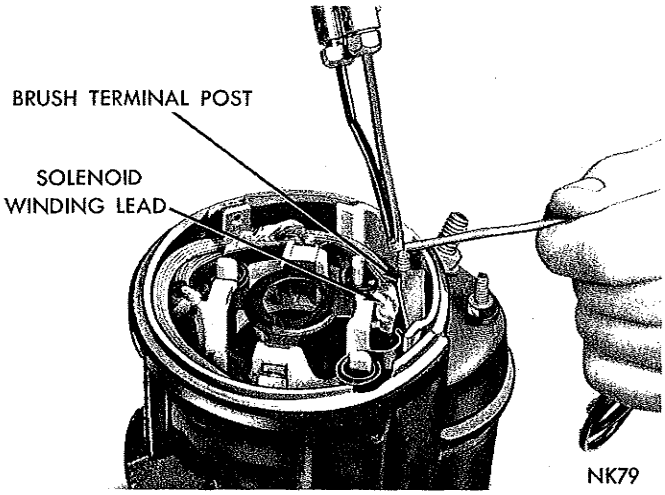


***Fig. 22—Soldering Solenoid Winding Lead to the Brush Terminal***

(19) Install brush terminal screw (Fig. 2).

(20 Position field frame to the exact position on gear housing and enter armature into field frame and starter gear housing Fig. 25); carefully engaging splines of shaft with reduction gear by rotating armature slightly to engage the splines.

(21) Install thrust washer (fiber) and washer (steel) on armature shaft.

(22) Position starter end head assembly and install starter frame lockwashers and through bolts. Tighten through bolts securely.

(23) Clean area at the joint between brush holder plate to field frame and gear housing mating joint. Apply a bead of brush plate sealer Part NO. 2421847 or equivalent around the four sides of the joint (Fig. 26).

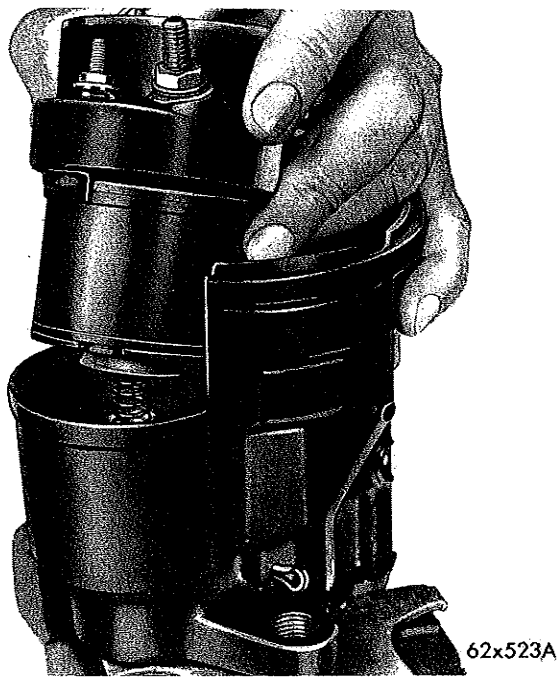


***Fig. 23—Installing Solenoid and Brush Holder into Gear Housing***

MyMopar.com

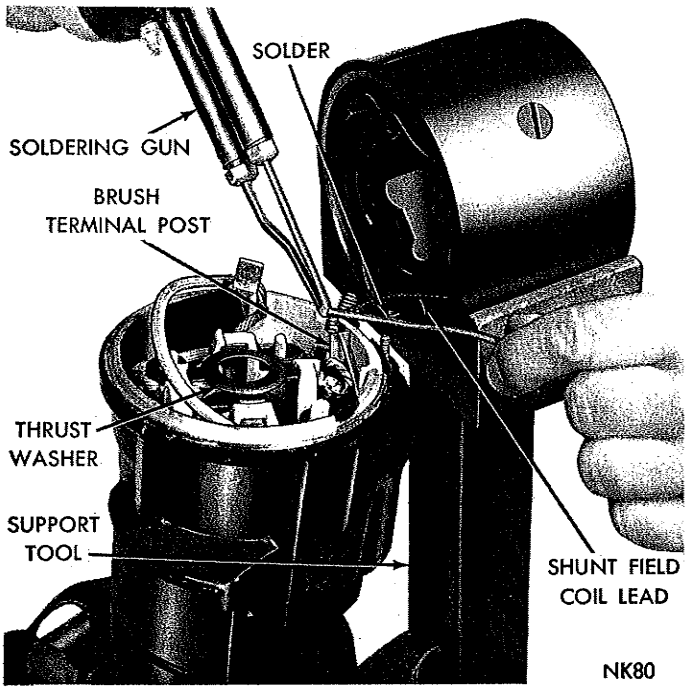


***Fig. 24—Soldering Shunt Coil Lead Wire***

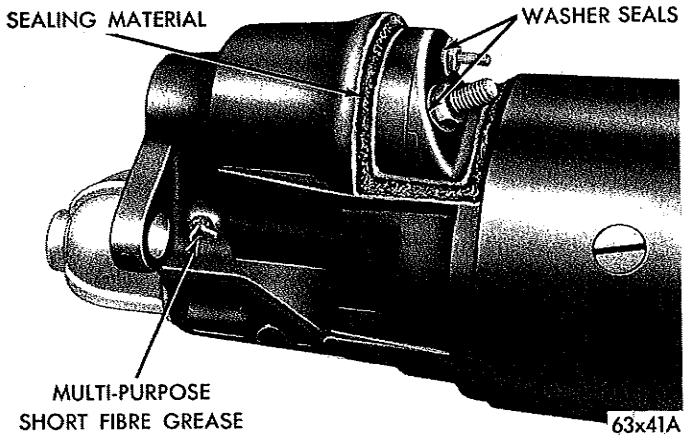


***Fig. 26—Sealing Brush Holder Plate***

(5) Connect battery ground cable and test operation of the starter for proper engine cranking.

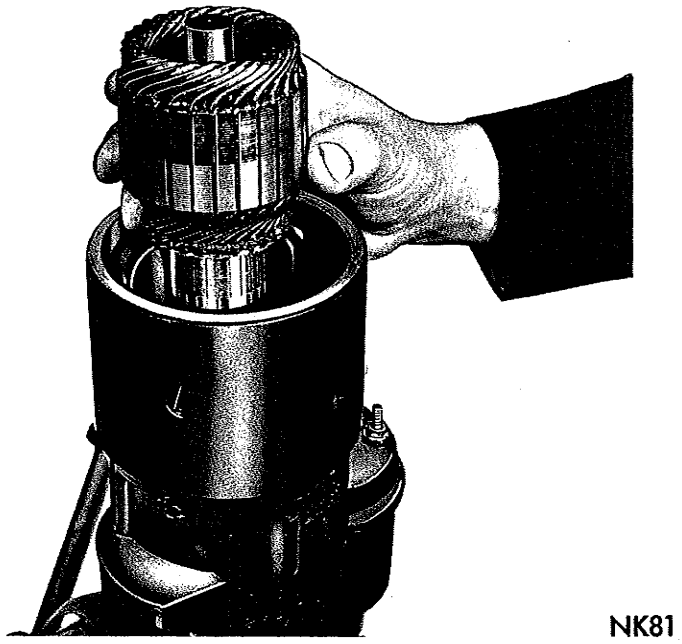


***Fig. 25—Installing Starter Armature***

**CAUTION: Sealer must be flowed continuously to avoid gaps. After the bead has been flowed on, use a brush or small paddle moistened in mineral spirits to press adhesive into the joint. Do not get adhesive on the battery and/or solenoid terminals.**

## INSTALLING THE STARTER

(1) Before installing the starter, make sure starter and flywheel housing mounting surfaces are free of dirt and oil to insure a good electrical contact.

(2) Position starter to the flywheel housing removable seal (if removed). Install the starter, washer and bolt, automatic transmission oil cooler tube bracket and washer and nut. **When tightening bolt and nut be sure to hold the starter pulled away from the engine to insure proper alignment.**

(3) Attach wire at solenoid switch terminal and cable to starter terminal.

## STARTER (DIRECT DRIVE)


| | Page |
|---|---|
| Adjusting Starter Drive Pinion Clearance | 22 |
| Amperage Draw Test | 17 |
| Assembling the Starter | 22 |
| Brushes and Springs Replacement | 19 |
| Brushes - Servicing | 19 |
| Cleaning and Inspection | 19 |
| Cleaning the Starter Parts | 19 |
| Disassembling the Starter | 18 |
| Drive Unit - Servicing | 22 |
| Drive Gear Pinion Clearance - Adjusting | 22 |
| Field Coils - Replacement | 21 |
| Free Running Test | 18 |
| General Information | 5 |
| Installing the Starter | 22 |
| Insulated Circuit Test | 17 |
| Lock Resistance Test | 18 |
| Removing the Starter | 18 |
| Replacement of Brushes and Springs | 22 |
| Replacing Field Coils | 21 |
| Service Diagnosis | 6 |
| Servicing Bushings | 22 |
| Servicing Drive Unit | 22 |
| Servicing the Starter | 17 |
| Specifications | 89 |
| Starter Circuit Tests | 17 |
| Starter Ground Circuit Test | 17 |
| Starter Resistance Test | 17 |
| Testing Armature | 20 |
| Testing Field Coils for Ground | 21 |
| Testing Starting Motor (Bench Test) | 18 |


MyMopar.com

## SERVICE PROCEDURE

### STARTER AMPERAGE DRAW TEST (with BST 11, BST-10, or BST-5 Tester)

Check battery electrolyte gravity with a reliable hydrometer. Gravity should be not less than 1.220 (temperature corrected). Or see that battery passes High Rate Discharge Test shown in the "Battery" section of this manual.

Turn Battery—Starter Tester **CONTROL KNOB** to "OFF" position.

Turn voltmeter Selector Switch to 16 Volt position. Connect heavy **Positive** ammeter lead (Red) to **Positive** battery terminal. Connect heavy **Negative** ammeter lead (Black) to **Negative** battery terminal.

Connect **Positive** voltmeter lead (Red) to **Positive** battery terminal. Connect **Negative** voltmeter lead (Black) to **Negative** battery terminal.

**DISCONNECT** ignition primary lead from ignition ballast resistor, or primary wire from either side of coil, to prevent engine from starting.

Crank engine with a remote control starter switch and observe **Exact** reading on Voltmeter. Stop cranking engine. Without cranking engine, turn tester **CONTROL KNOB** clockwise until voltmeter reads **Exactly** the same as when engine was being cranked with the remote control starter switch. Ammeter now indicates starter amperage draw. Check specifications. **Engine should be up to operating temeprature. Extremely heavy oil or a tight engine will increase amperage draw.**

### STARTER RESISTANCE TEST

(1) Test battery electrolyte specific gravity. Specific gravity should be 1.220 or above.

(2) Disconnect positive battery lead from battery terminal post. Connect an 0 to 300 scale ammeter between disconnected lead and battery terminal post.

(3) Connect a test voltmeter with 10 volt scale division between battery positive post and starter switch terminal at starter solenoid.

(4) Crank engine and observe reading on voltmeter and ammeter. The voltage should not exceed .3 volt. A reading of voltage that exceeds .3 volt indicates there is high resistance caused from loose circuit connections, a faulty cable, burned starter relay or solenoid switch contacts. A current that is high and is combined with slow cranking speed, indicates that starter should be removed and repaired.

### STARTER INSULATED CIRCUIT TEST

(1) Test battery electrolyte specific gravity. Specific gravity should be 1.220 or above.

(2) Turn Voltmeter Selector Switch to 4 volt position.

(3) Disconnect ignition coil secondary cable.

(4) Connect voltmeter positive lead to battery positive post and voltmeter negative lead to solenoid connector which connects to starter field coils. **The voltmeter will read off scale to the right until starter is actuated.**

(5) Connect remote control switch to the battery and solenoid terminal of starter relay.

(6) Crank engine with a remote control starter switch and observe voltmeter reading. Voltmeter reading should not exceed .3 volt. A voltmeter reading of .3 volt or less indicates voltage drop is normal in the cables, starter relay switch, solenoid switch and connections between battery and starter is normal. See "Starter Ground Circuit Test."

If voltmeter reading is more than .3 volt, it indicates high resistance in the starter insulated circuit. Make following tests to isolate point of excessive voltage loss:

(a) Remove the voltmeter lead from the solenoid connector and connect to the following points, repeating test at each connection. Starter terminal of solenoid, battery terminal of solenoid, battery cable terminal at solenoid, starter relay and cable clamp at battery.

(b) A small change will occur each time a normal portion of the circuit is removed from the test. A definite change in voltmeter reading indicates that the last part eliminated in the test is at fault.

Maximum allowable voltage loss is as follows:

| | |
|---|---|
| Battery insulated cable | .2 volt |
| Solenoid switch | .1 volt |
| Each connection | .0 volt |

Replace faulty cables. Clean and tighten all connections.

#### *Starter Ground Circuit Test*

(1) Connect the voltmeter positive lead to starter housing and negative voltmeter lead to battery negative post.

(2) Crank engine with a remote control starter switch and observe voltmeter reading. Voltmeter reading should not exceed .2 volt. A reading of .2 volt or less indicates voltage loss in ground cable and connections are normal. If voltmeter reading is more than .2 volt, it indicates excessive voltage loss in starter ground circuit. Make the following tests to isolate point of excessive voltage loss, repeating test at each connection.

(a) Starter drive housing.
(b) Cable terminal at engine.
(c) Cable clamp at battery.

A small change will occur each time a normal portion of the circuit is removed from test. A definite change in voltmeter reading indicates the last part

MyMopar.com

eliminated in the test is at fault.

Maximum allowable voltage loss is as follows:

| | |
|---|---|
| Battery ground cable | .0 volt |
| Engine ground circuit | .2 volt |
| Each connection | .1 volt |

## REMOVING THE STARTER

(1) Disconnect ground cable at battery.
(2) Remove starter cable at starter.
(3) Disconnect solenoid lead wire from solenoid.
(4) Remove bolts attaching the starter to flywheel housing and remove the starter.

## TESTING THE STARTER
### *(Bench Test)*

### *Free Running Test*

(1) Place starter in a vise equipped with soft jaws and connect a fully-charged, 12 volt battery to starter as follows:
(2) Connect a test ammeter (100 amperes scale) and a carbon pile rheostat in series with battery positive post and starter terminal.
(3) Connect voltmeter (15 volt scale) across starter.
(4) Rotate carbon pile to full-resistance position.
(5) Connect battery cable from battery negative post to starter frame.
(6) Adjust rheostat until battery voltage shown on voltmeter reads 11 volts.
(7) Current draw should be 78 amperes maximum at 3800 minimum rpm.

### *Locked Resistance Test*

(1) Install the starter in test bench.
(2) Follow instructions of test equipment manufacturer and test the locked-resistance of the starter against following specifications.
(3) With applied battery voltage adjusted to 4 volts; current draw should be 350 amperes.

## DISASSEMBLING THE STARTER

(1) Refer to Figure 1, remove through bolts and tap the commutator end head from field frame.
(2) Remove thrust washers from armature shaft.
(3) Lift brush holder springs and remove brushes from brush holders.
(4) Remove brush plate (Fig. 2).

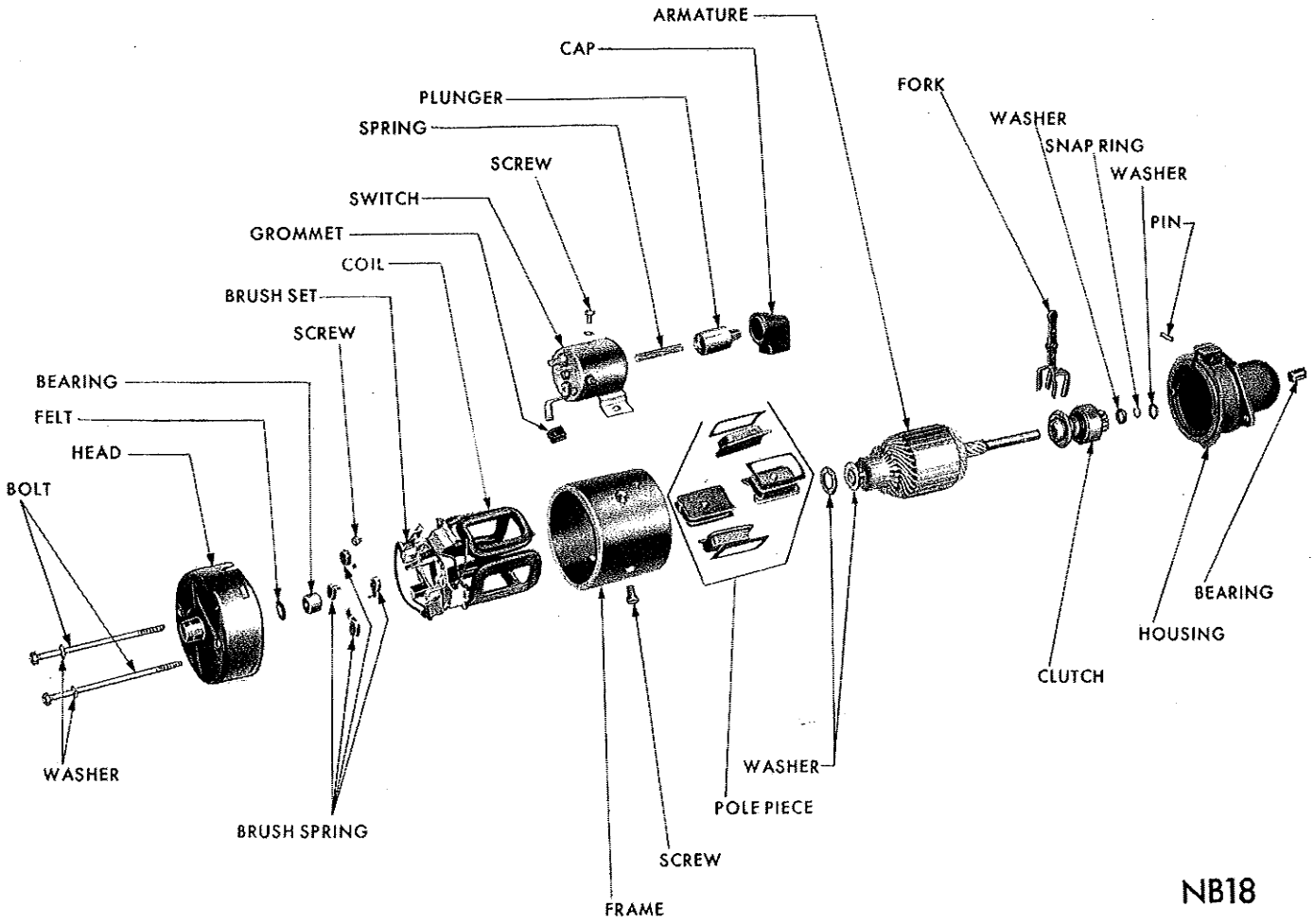


*Fig. 1—Starter Motor (Disassembled View) (Typical)*

MyMopar.com

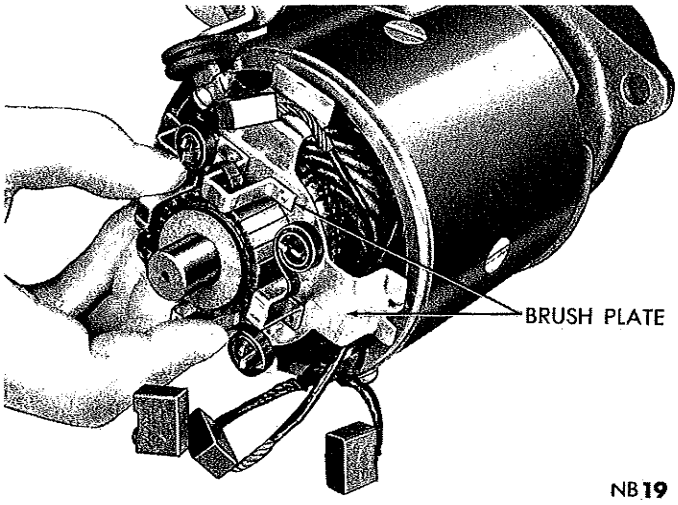


*Fig. 2—Removing the Brush Ring*

(5) Disconnect field coil leads at solenoid connector (Fig. 3).

(6) Remove solenoid attaching screws and remove solenoid and boot assembly (Fig. 4).

(7) Drive out the overrunning clutch shift fork pivot pin (Fig. 5).

(8) Remove drive end pinion housing and spacer washer.

(9) Note position of the shifter fork on starter drive and remove shifter fork (Fig. 6).

(10) Slide overrunning clutch pinion gear toward commutator end of armature, drive stop retainer toward clutch pinion gear to expose snap ring and remove snap ring.

(11) Slide overrunning clutch drive from armature shaft.

(12) If it is necessary to replace field coils, remove the ground brushes terminal attaching screw and raise the brushes with terminal and shunt wire up and away from field frame (Fig. 7). Remove pole shoe screws with special pole shoe impact screwdriver, Tool C-3475.

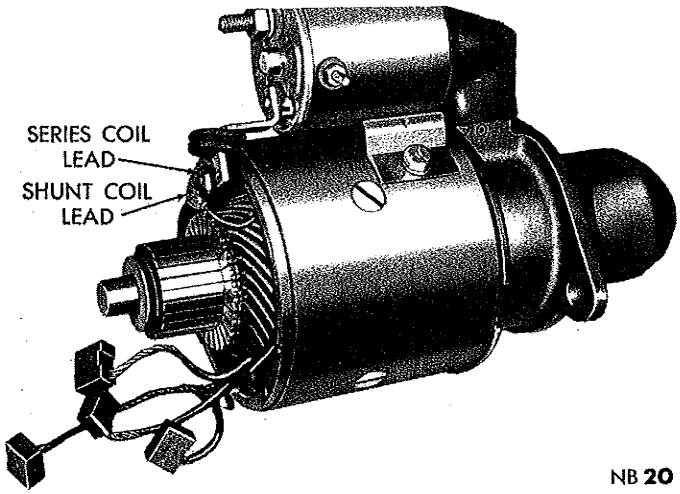


*Fig. 3—Field Coil Leads Disconnected from the Solenoid Connector*

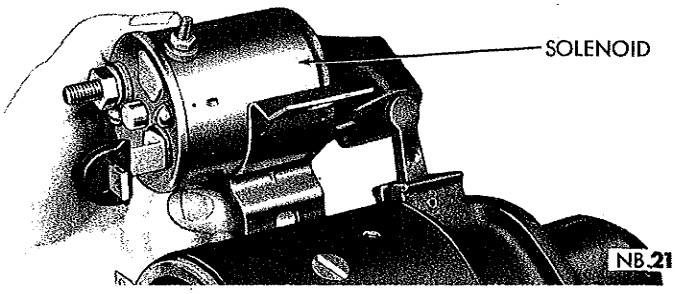


*Fig. 4—Removing the Starter Solenoid*

## CLEANING THE STARTER PARTS

(1) Do not immerse parts in cleaning solvent. Immersing the field frame and coil assembly and/or armature will damage insulation. Wipe these parts with a cloth **only.**

(2) Do not immerse drive unit in cleaning solvent. Drive clutch is pre-lubricated at the factory and solvent will wash lubrication from clutch.

(3) The drive unit may be cleaned with a brush moistened with cleaning solvent and wiped dry with a cloth.

## BRUSHES AND SPRINGS—REPLACEMENT

(1) Brushes that are worn more than ½ the length of new brush, or are oil-soaked, should be replaced. Brushes and springs can be replaced after removing commutator end head and brush plate.

(2) Disengage brushes from brush holders and remove brush plate.

(3) Disconnect series coil and shunt field coil terminal at solenoid connector (Fig. 3).

(4) Remove ground brush terminal screw and carefully remove ground brush set to prevent breaking shunt field lead.

(5) Remove shunt field lead from old brush set to ensure as much length as possible.

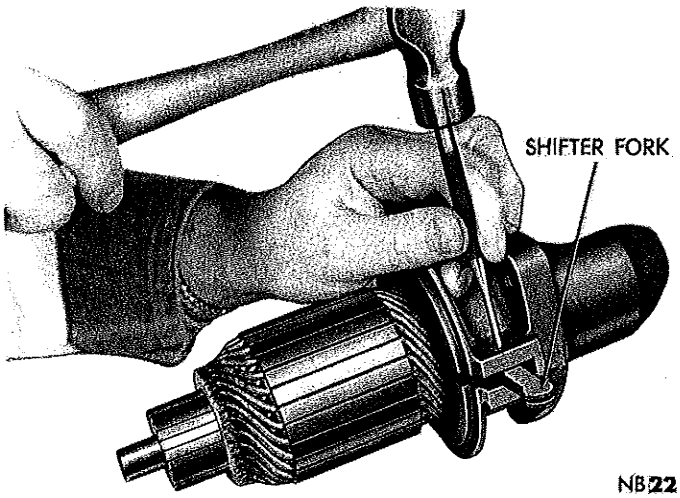


*Fig. 5—Removing the Shifter Fork Pivot Pin*

MyMopar.com

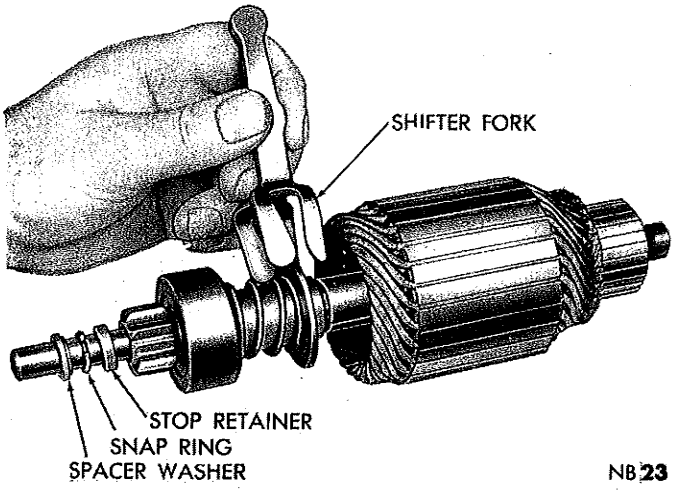


*Fig. 6—Removing the Shift Fork*

(6) Remove field terminal plastic covering and remove old brushes. Use side cutters to break the weld by rolling the stranded wire off the terminal.

(7) Drill a .174 to .184 inch hole in the series coil terminal 3/16 of an inch from top of terminal to centerline of hole (Fig. 7). (Use a number 16 drill.)

**CAUTION: Do not damage the field coil during the drilling operation.**

(8) Attach insulated brush set to series field terminal with flat washer and number 8 self-tapping screw.

(9) Attach shunt field lead to new ground brush set by making a loop around the terminal and soldering lead to the terminal with resin core solder.

(10) Attach ground brush terminal to field frame with attaching screw. Fold surplus shunt field lead back along the brush lead and secure with rubber insulating tape.

(11) Measure brush spring tension with a spring scale hooked under spring near brush end. Pull scale on a line parallel to edge of brush and take a reading just as spring end leaves the brush. Spring tension should be 32 to 36 ounces. Replace springs that do not meet specifications.

(12) Brush springs can be removed by spreading the retainers and disengaging the springs from retainer legs.

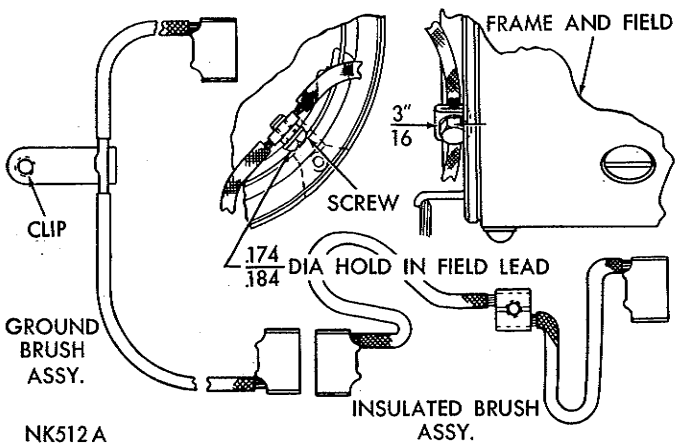


*Fig. 7—Brush Replacement*

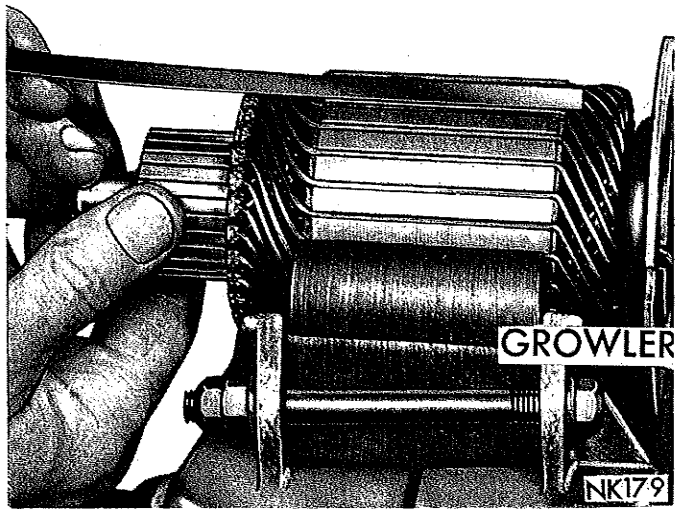


*Fig. 8—Testing Armature for Short*

## TESTING THE ARMATURE

### *Testing Armature for Short Circuit*

Place armature in a growler (Fig. 8) and hold a thin steel blade parallel to the core and just above it, while slowly rotating armature in growler. A shorted armature will cause blade to vibrate and be attracted to the core. Replace shorted armature.

### *Testing Armature for Ground*

Touch armature shaft and the end of each commutator bar with a pair of test lamp prods (Fig. 9). If lamp lights, it indicates a grounded armature. Replace grounded armature.

### *Testing Commutator Runout, Refacing*

Place armature in a pair of "V" blocks and check runout with a dial indicator. Check both shaft and commutator. A bent shaft requires replacement of

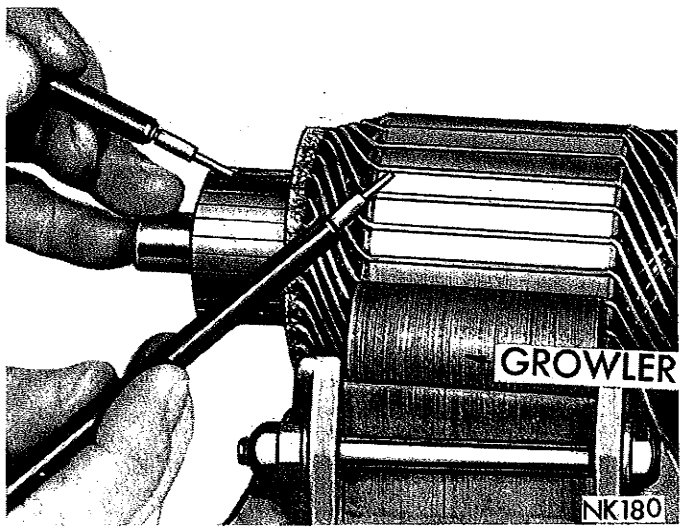


*Fig. 9—Testing Armature for Ground*

MyMopar.com

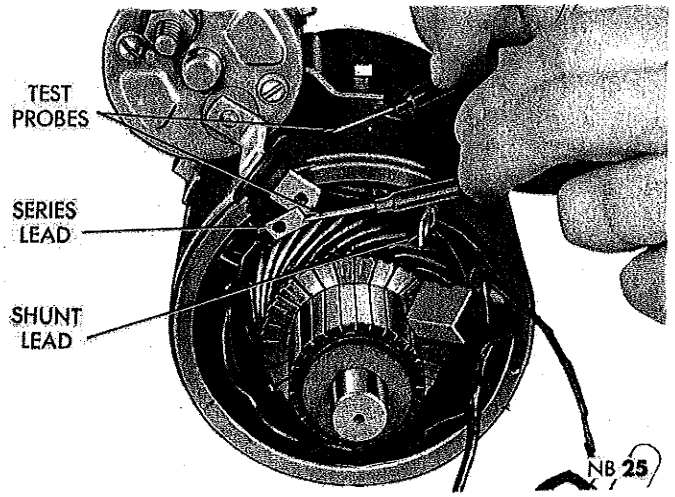


*Fig. 10—Testing Series Coil for a Ground*

armature.

When commutator runout exceeds .003 inch, commutator should be refaced. Remove only a sufficient amount of metal to provide a smooth, even surface.

## TESTING FIELD COILS FOR GROUND

(1) Remove through bolts and commutator end frame.

(2) Remove brushes from brush holders and remove brush plate (Fig. 2).

(3) Disconnect field lead wires at solenoid connector and separate field leads to make sure they do not touch solenoid connector (Fig. 3).

(4) Remove ground brushes attaching screw, and raise brushes with terminal and shunt wire up and away from field frame.

(5) Touch one probe of test lamp to series field coil lead and other probe to field frame (Fig. 10). Lamp should not light.

(6) Touch one probe to shunt field coil lead and other probe to field frame (Fig. 11).

If lamp lights in either test (5) or (6), field coils are

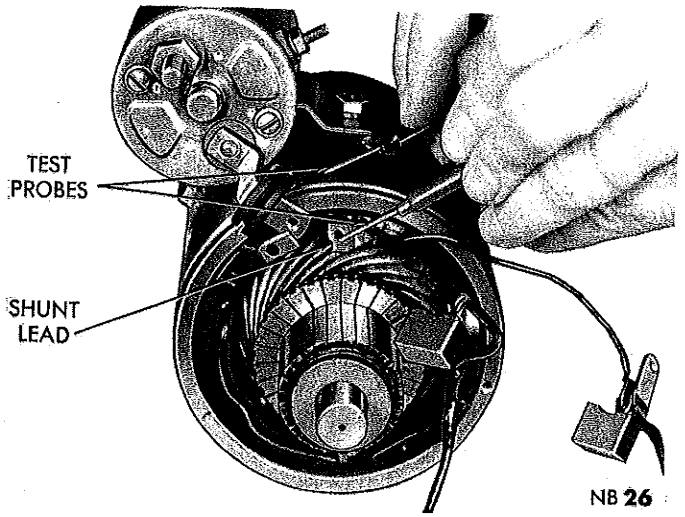


*Fig. 11—Testing Shunt Coil for Ground*

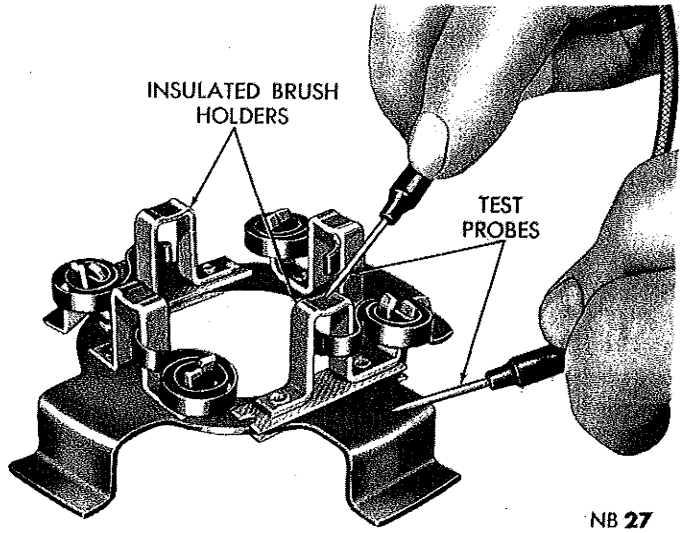


*Fig. 12—Testing Insulated Brush Holder for a Ground*

grounded. If field coils are grounded, test each coil separately after unsoldering connector wires. Replace grounded field coils.

(7) Touch each of the brush holders with one test probe, while holding other test probe against brush ring. Two brush holders that are 180 degrees apart should cause test lamp to light as they are intentionally grounded. The other two brush holders (Fig. 12) should not cause lamp to light when tested as they are insulated. If insulated brush holders cause lamp to light when tested, it indicates that brush holders on brush ring are grounded. Replace brush ring assembly if brush holders are grounded.

## REPLACING FIELD COILS

A pole shoe impact screwdriver Tool C-3475 should be used to remove and install field coils to prevent damage to the pole shoe screws and for proper tightening.

Pole shoes that are loose and not properly seated may cause armature core to rub on pole shoes. This

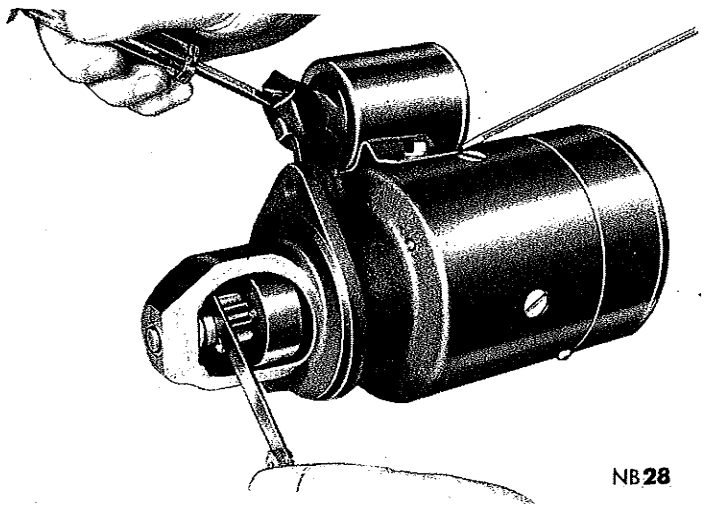


*Fig. 13—Checking Starter Drive Pinion Clearance*

MyMopar.com

will decrease starter efficiency and damage armature core. **Scribe a mark on the pole shoe and field frame to ensure pole shoes are assembled in their original position.**

## SERVICING BUSHINGS

Inspect armature shaft bearing surfaces and bushings for wear by placing armature core in a vise equipped with soft jaws. Do not squeeze tightly. Try the commutator end frame, drive end frame, and armature support bushings for wear by placing them on shafts and checking for side play. Replace commutator end frame and bushing assembly if bushing is worn. Replace drive end bushing if it is worn. The bushing should be well soaked in SAE-30 engine oil before it is installed. New pre-sized bushings should be pressed into the housing until bushing is flush with inner side of housing to provide proper clearance. Use Tool C-3944 to remove and install bushing.

## SERVICING THE DRIVE UNIT

Place drive unit on armature shaft and, while holding armature, rotate the pinion. Drive pinion should rotate smoothly in one direction (not necessarily easily), but should not rotate in opposite direction. If drive unit does not function properly, or if pinion is worn or burred, replace drive unit.

## ASSEMBLING THE STARTER

***(Refer to Figure 1)***

(1) Lubricate armature shaft and splines with SAE 10-W or SAE-30 rust preventative oil.

(2) Install starter drive, stop collar (retainer), lock ring and spacer washer.

(3) Install shifter fork over starter drive spring retainer washer with narrow leg of fork toward the commutator (Fig. 6). This is important, if the fork is not properly positioned starter gear travel will be restricted causing a lockup in the clutch mechanism.

(4) Install drive end (pinion) housing on armature shaft, indexing shifting fork with slot in drive end housing.

(5) Install shifter fork pivot pin (Fig. 5).

(6) With clutch drive, shifter fork, and pinion housing assembled to the armature, slide armature into field frame until pinion housing indexes with slot in field frame.

(7) Install solenoid and boot assembly (Fig. 4). Tighten bolts to 60-70 inch pounds.

(8) Connect field coil leads at solenoid connector (Fig. 3). **Be sure terminals do not touch field frame.**

(9) Install brush holder ring (Fig. 2) indexing tang of ring in hole of field frame.

(10) Position brushes in brush holders. Be sure field coil lead wires are properly enclosed behind brush holder plate and do not interfere with brush operation.

(11) Install thrust washers on commutator end of armature shaft to obtain .010 inch minimum end play.

(12) Install commutator end head.

(13) Install through bolts and tighten to 40 to 50 inch-pounds.

## ADJUSTING STARTER DRIVE GEAR (PINION) CLEARANCE

(1) Place starter assembly in a vise equipped with soft jaws and tighten vise sufficiently to hold starter.

**Place a wedge or screwdriver between bottom of solenoid and starter frame to eliminate all deflection in the solenoid when making the pinion clearance test.**

(2) Push in on solenoid plunger cage (Fig. 13) (NOT THE FORK LEVER) until plunger bottoms.

(3) Measure clearance between end of pinion and pin stop with plunger seated and pinion pushed toward the commutator end. Clearance should be ⅛ inch. Adjust for proper clearance by loosening solenoid attaching screws and move solenoid fore and aft as required.

(4) Test starter operation under a "Free Running Test."

## INSTALLING THE STARTER

(1) Before installing the starter, be sure starter and flywheel housing mounting surfaces are free of dirt and oil. These surfaces must be clean to make good electrical contact.

(2) Position starter to flywheel housing removable seal (if removed).

(3) Install starter from beneath the engine.

(4) Tighten attaching bolts securely.

(5) Attach the wires to solenoid switch and starter terminal.

(6) Install battery ground cable and test operation of starter for proper engine cranking.

# ALTERNATOR AND VOLTAGE REGULATOR

## INDEX


| | Page |
|---|---|
| Assembling the Alternator | 40 |
| Bench Tests | 34 |
| Disassembling the Alternator | 35 |
| Fusible Wire Replacement | 30 |
| General Information | 23 |
| Rectifier (Diode) Testing | 35 |
| Regulator Operation | 27 |
| Regulator Testing (Chrysler Built) | 28 |
| Regulator Testing (Essex Wire) | 32 |
| Replacing Slip Rings | 38 |
| Service Diagnosis | 23 |
| Specifications | 90 |
| Testing the Alternator System (On the Vehicle) | 24 |
| Voltage Regulator (Chrysler Built) | 27 |
| Voltage Regulator (Essex Wire) | 31 |


MyMopar.com

## GENERAL INFORMATION

The alternator (Fig. 2) is fundamentally an A.C. current generator, with six (6) built-in silicon rectifiers, that convert A.C. current into D.C. current. D.C. current is available at the "output" "BAT" terminal.

The main components of the alternator are the rotor, stator, rectifiers, the end shields and the drive pulley. (See Fig. 1.)

## SERVICE DIAGNOSIS

| Condition | Possible Cause | Correction |
|---|---|---|
| **ALTERNATOR FAILS TO CHARGE (No Output)** | (a) Blown fusible wire in voltage regulator. | (a) Locate and correct cause of the fuse blowing. Install new fuse wire. Solder both ends of new fusible wire securely. |
| | (b) Alternator drive belt loose. | (b) Adjust drive belt to Specifications. |
| | (c) Worn brushes and/or slip rings. | (c) Install new brushes and/or slip rings. |
| | (d) Sticking brushes. | (d) Clean slip rings and brush holders. Install new brushes if necessary. |
| | (e) Open field circuit. | (e) Test all the field circuit connections, and correct as required. |
| | (f) Open charging circuit. | (f) Inspect all connections in charging circuit, and correct as required. |
| | (g) Open circuit in stator windings. | (g) Remove alternator and disassemble. Test stator windings. Install new stator if necessary. |
| | (h) Open rectifiers. | (h) Remove alternator and disassemble. Test the rectifiers. Install new rectifiers if necessary. |
| **LOW, UNSTEADY CHARGING RATE** | (a) Alternator drive belt loose. | (a) Adjust alternator drive belt. |
| | (b) High resistance at battery terminals. | (b) Clean and tighten battery terminals. |
| | (c) High resistance in charging circuit. | (c) Test charging circuit resistance. Correct as required. |
| | (d) High resistance in body to engine ground lead. | (d) Tighten ground lead connections. Install new ground lead if necessary. |
| | (e) Open stator winding. | (e) Remove and disassemble alternator. Test stator windings. Install new stator if necessary. |
| **LOW OUTPUT AND A LOW BATTERY** | (a) High resistance in charging circuit. | (a) Test charging circuit resistance and correct as required. |
| | (b) Low regulator setting. | (b) Reset voltage regulator to specifications. |
| | (c) Shorted rectifier. Open rectifier. | (c) Perform current output test. Test the rectifiers. Remove and disassemble the alternator and install new rectifiers as required. |
| | (d) Grounded stator windings. | (d) Remove and disassemble alternator. Test stator windings. Install new stator if necessary. |
| **EXCESSIVE CHARGING RATE TO A FULLY CHARGED BATTERY** | (a) Regulator set too high. | (a) Reset voltage regulator to specifications. |
| | (b) Regulator contacts stuck. | (b) Install new voltage regulator. |
| | (c) Regulator voltage winding open. | (c) Install new voltage regulator. |
| | (d) Regulator base improperly grounded. | (d) Connect regulator base to a good ground. |
| **REGULATOR CONTACTS BURNED** | (a) High regulator setting. | (a) Reset voltage regulator to specifications. |
| | (b) Shorted rotor field coil windings. | (b) Test rotor field coil current draw. If excessive install new rotor. |
| **REGULATOR CONTACT POINTS STUCK** | (a) Poor ground connection between alternator and regulator. Open resistor element. | (a) Correct ground connection. Install new regulator. Test regulator setting, and reset if necessary. |

MyMopar.com

| Condition | Possible Cause | Correction |
|---|---|---|
| **NOISY ALTERNATOR** | (a) Alternator mounting loose. | (a) Properly install and tighten alternator mounting. |
| | (b) Worn or frayed drive belt. | (b) Install a new drive belt and adjust to specifications. |
| | (c) Worn bearings. | (c) Remove and disassemble alternator. Install new bearing as required. |
| | (d) Interference between rotor fan and stator leads or rectifiers. | (d) Remove and disassemble alternator. Correct intereference as required. |
| | (e) Rotor or rotor fan damaged. | (e) Remove and disassemble alternator. Install new rotor. |
| | (f) Open or shorted rectifier. | (f) Remove and disassemble alternator. Test rectifiers. Install new rectifiers as required. |
| | (g) Open or shorted winding in stator. | (g) Remove and disassemble alternator. Test stator windings. Install new stator if necessary. |
| **EXCESSIVE AMMETER FLUCTUATION** | (a) High resistance in the field circuit to the alternator or an improperly set voltage regulator. | (a) Clean and tighten all connections as necessary. Adjust voltage regulator as necessary. |

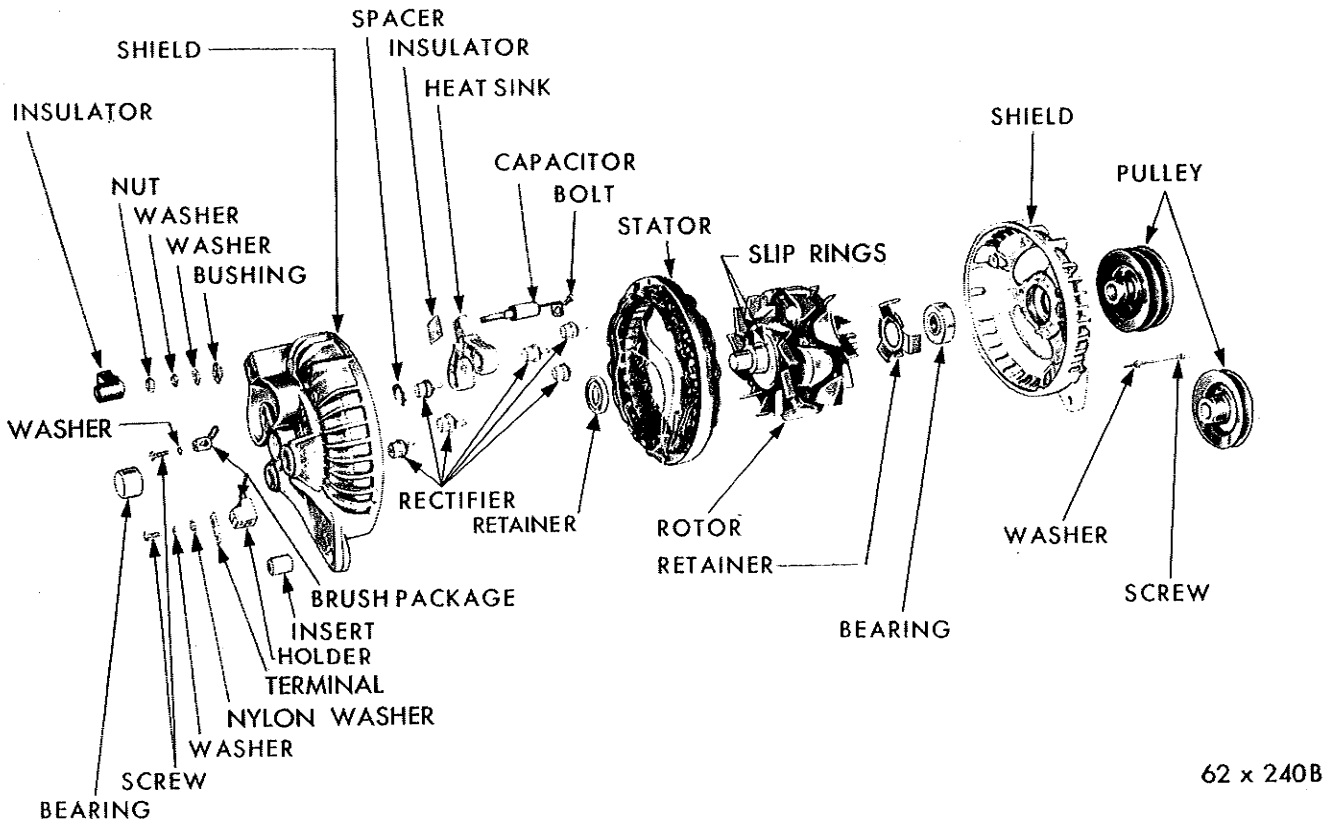


***Fig. 1—Alternator (Disassembled View)***

## SERVICE PROCEDURES

### TESTING THE ALTERNATOR SYSTEM

**(On the vehicle Using Sun Volts-Amps, Tester Model VAT-20D and Battery Post Adapter)**

**For the sake of uniformity, one type of equipment is shown. Follow the instructions of the equipment manufacturers on comparable equipment when making the following tests:**

#### *Preliminary Checks*

(1) **Test the battery condition.** Perform reliable battery tests to determine condition and state of charge of the battery . If battery is faulty or not

MyMopar.com

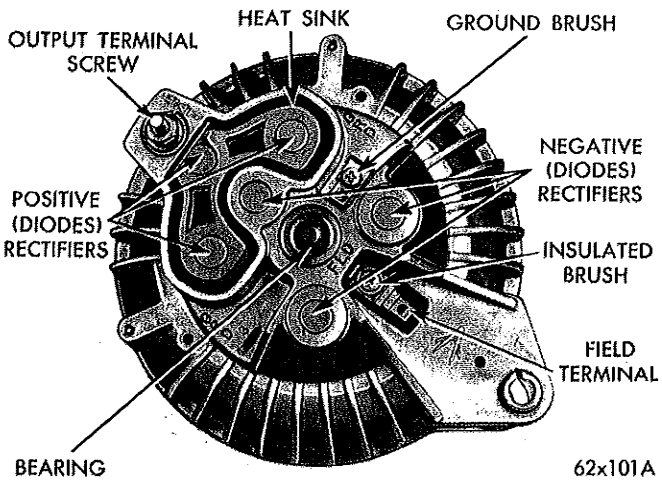


***Fig. 2—Alternator Assembly***

fully charged, install a fully charged battery for test purposes.

(2) **Test the alternator belt condition and tension.** Replace alternator drive belt if necessary and make sure there is adequate tension on the belt.

(3) **Inspect condition of wires and their connections.** Before performing the test on the system, correct any problem with wiring, such as loose connections, corroded connections, burned wiring harness, etc.

### *Tester Controls and Switches*

(1) Set Polarity Switch to NEGATIVE position.
(2) Set tester control knob to DIRECT position.
(3) Set voltage switch to 2 VOLT position.
(4) Set field control to OPEN position.

### *Tester Lead Connections (Fig. 3)*

(1) Disconnect battery positive cable from battery post and install BATTERY POST ADAPTER between cable and post.

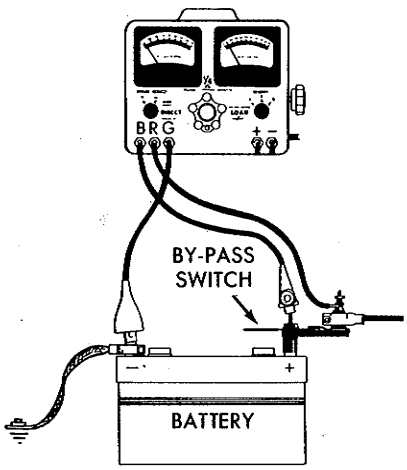


***Fig. 3—Tester Lead Connections***

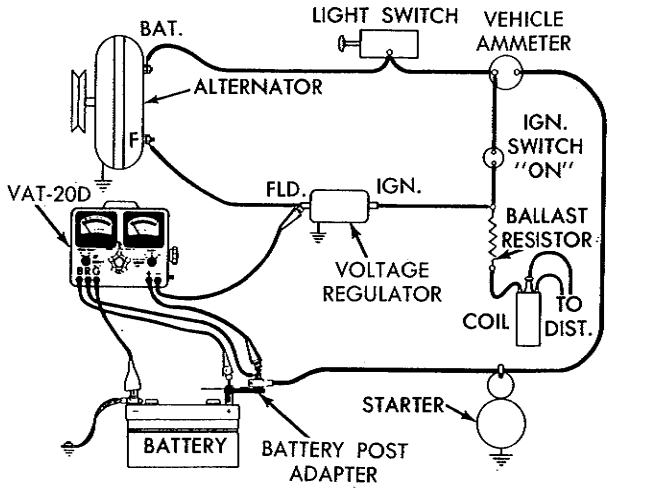


***Fig. 4—Field Circuit Resistance and Field Current Draw Test***

(2) Connect "BAT" lead of tester to stud on adapter.

(3) Connect "REG" lead of tester to binding post on adapter.

(4) Connect "GRD" lead of tester to battery negative terminal.

(5) Connect negative lead of voltmeter to field terminal of regulator.

(6) Connect positive lead of voltmeter to battery end of positive battery cable. **Battery Post Adapter BY-PASS SWITCH must be open for all charging system tests. It is closed only for starting the engine.**

### *Field Circuit Resistance Test (Fig. 4)*

(1) Disconnect slip-on connector from either end of ignition ballast resistor.

(2) Turn ignition switch on.

(3) With vehicle doors closed and all accessories turned off, observe Voltmeter reading. Voltage should not exceed .55 volt. A reading in excess of .55 volt indicates high resistance in field circuit between battery and voltage regulator field terminal.

(4) If high resistance is indicated, move negative voltmeter lead to each connection along circuit towards battery. A sudden drop in voltage indicates a loose or corroded connection between that point and last point tested. To test terminals for tightness, attempt to move the terminal while observing voltmeter. Any movement of meter pointer indicates looseness. **Excessive resistance in regulator wiring circuit will cause fluctuation in the ammeter, or a below normal charge rate.**

### *Field Current Draw Test (Fig. 4)*

With tester connections positioned as for the Field Circuit Resistance Test, observe test ammeter. Test ammeter will indicate field current draw. Refer to

MyMopar.com

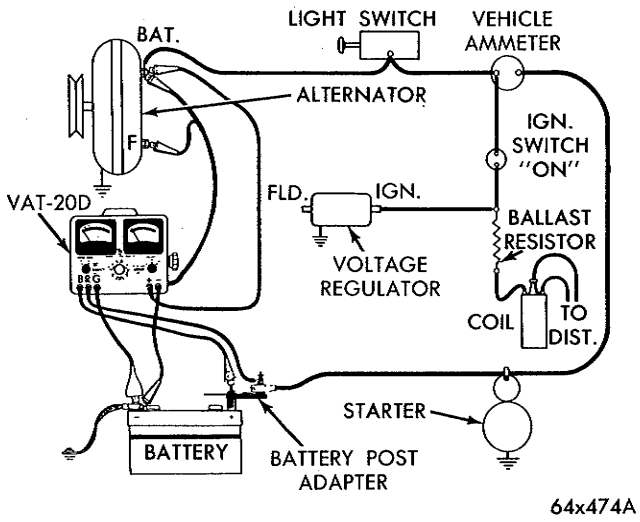


*Fig. 5—Current Output Test*

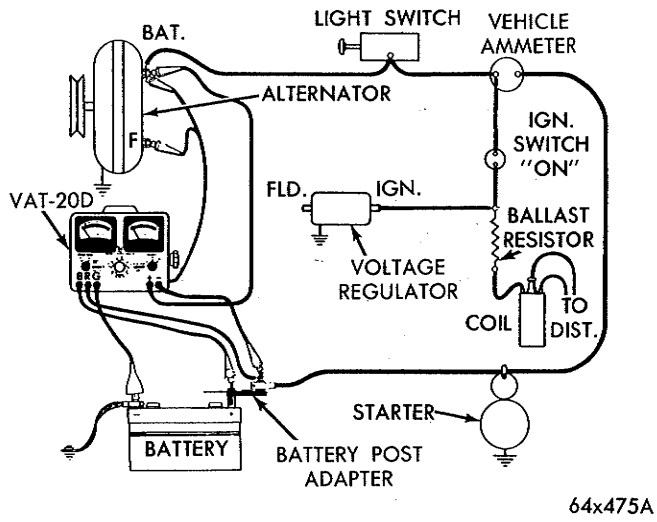


*Fig. 6—Insulated Circuit Resistance Test*

"Specifications."

### *Current Output Test (Fig. 5)*

(1) With ignition switch off, disconnect the field wire from the "FLD" terminal of the alternator and at the regulator.

(2) Connect one of the test leads of tester Field Control to "FLD" terminal of alternator.

(3) Connect other lead of Tester Field Control to "BAT" terminal of alternator.

(4) Set Tester Voltage Switch to 16 VOLT position.

(5) Connect positive lead of test Voltmeter to "BAT" terminal of alternator.

(6) Connect negative lead of the Test Voltmeter to battery negative post.

(7) Reconnect slip-on connector at ignition ballast resistor.

(8) Close BY-PASS Switch of Battery Post Adapter.

(9) With tester Field Control in OPEN position, start engine and adjust to 1250 RPM.

(10) Open BY-PASS Switch of Battery Post Adapter.

(11) Rotate tester Control Knob to LOAD position until Voltmeter reads 6 volts.

(12) Rotate tester Field Control to DIRECT position and adjust tester Control Knob until Voltmeter reads exactly 15 volts.

(13) Observe test ammeter. Ammeter now indicates maximum output of alternator. Current output should be within limits shown in "Specifications."

**Current output should be within 5 amperes of rated output as there is a total of 5 amperes supplied by the alternator that will not appear on test ammeter. This consists of ½ ampere approximate for the instruments, 1½ amperes for the engine ignition system, and 3 amperes for field current.**

If output is slightly less (5 to 7 amperes) than that specified above, it may be an indication of a possible "open" rectifier or other alternator internal problems. If output is considerably lower than that specified above, it may be an indication of a possible "shorted" rectifier or other alternator internal problems. In either case the alternator should be removed and tested on the bench before disassembly.

(14) Return tester Field Control to OPEN position.

(15) Return tester Control Knob to DIRECT position.

### *Insulated Circuit Resistance Test (Fig. 6)*

(1) Connect negative lead of Voltmeter to battery end of positive battery cable.

(2) Set Voltage Switch to 2 VOLT position.

(3) Adjust Field Control until tester ammeter reads exactly 10 amperes.

(4) Observe voltmeter reading. Voltmeter now indicates amount of voltage loss across insulated circuit. Voltage loss should not exceed .3 volt. If higher volt-

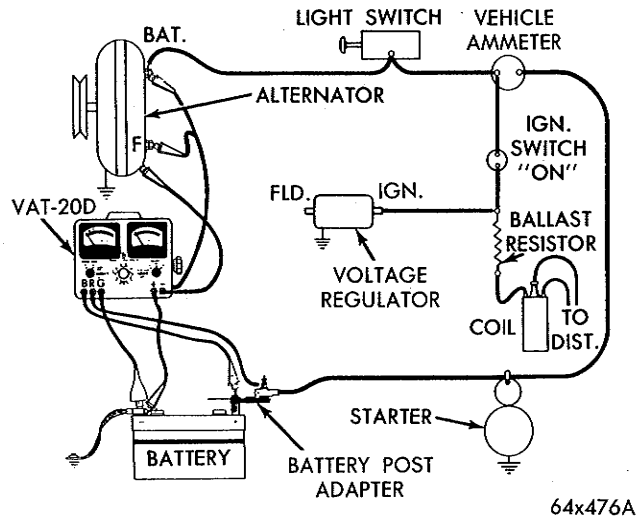


*Fig. 7—Ground Circuit Resistance Test*

MyMopar.com

age loss is indicated, inspect, clean and tighten all connections in charging circuit. A voltage loss test may be performed at each connection to locate the connection that has excessive resistance.

### *Ground Circuit Resistance Test (Fig. 7)*

(1) Connect positive lead of test voltmeter to negative terminal of battery.

(2) Connect negative lead of test voltmeter to a good ground on the alternator.

(3) With alternator charging 10 amps, observe voltmeter reading. Voltmeter now indicates amount of voltage loss across ground circuit. Voltage loss should not exceed .3 volt.

(4) Rotate tester Field Control to the OPEN position.

# VOLTAGE REGULATOR

## (CHRYSLER BUILT)

## GENERAL INFORMATION

The only function of the regulator is to limit the output voltage. The voltage regulator accomplishes this by controlling the flow of current in the rotor field coil, and in effect controls the strength of the rotor magnetic field.

The voltage regulator is connected in the field circuit between the battery and the field terminal of the alternator. One terminal of the regulator is marked "IGN" and the other is marked "FLD." The "IGN" terminal of the regulator is connected to the coil side of the ignition switch so that the field circuit is completed **only** when the ignition switch is turned "ON."

The voltage regulator (Fig. 8) has two sets of contacts using a common single armature. The upper and lower stationary contact brackets are mounted on a molded plastic bracket which is attached to the regulator frame by a screw (Fig. 9). The upper contact bracket is connected to the "IGN" terminal by a fusible wire. The lower contact bracket is connected to ground by another fusible wire. The armature is connected to the insulated "FLD" terminal.

Three resistance units are used (Fig. 10). Resistor number "one" and number "two" are connected between the "IGN" and "FLD" terminals, in parallel with the upper set of contacts. Resistor number "three" is connected between "FLD" terminal and ground. Its function is to reduce arcing at regulator contacts.

A voltage coil (Fig. 8) consisting of many turns of fine wire, is connected in series between the "IGN" terminal of the regulator and "ground." Thus, when the ignition switch is turned "ON," battery voltage applied to the windings energizes the coil and the magnetic force of the coil tends to attract the regulator armature.

When battery line voltage is relatively low, current flow through the voltage coil will be low. The magnetic force (or pull) of the voltage coil will not be great enough to overcome the regulator armature spring tension, which is holding the armature contact against the upper stationary contact (Fig. 8).

Battery line voltage applied to the "IGN" terminal causes current to flow through the regulator upper contacts, through the "FLD" terminal of the regulator and to the "insulated" brush and rotor slip ring. The rotor field coil circuit is completed to "ground" through the other rotor slip ring and the "ground" brush. Inasmuch as the upper contacts are "closed," the field circuit resistance is low, and maximum current will flow through the rotor field coil. The rotor field strength will be high, and the alternator output will be at its maximum for any rotor speed.

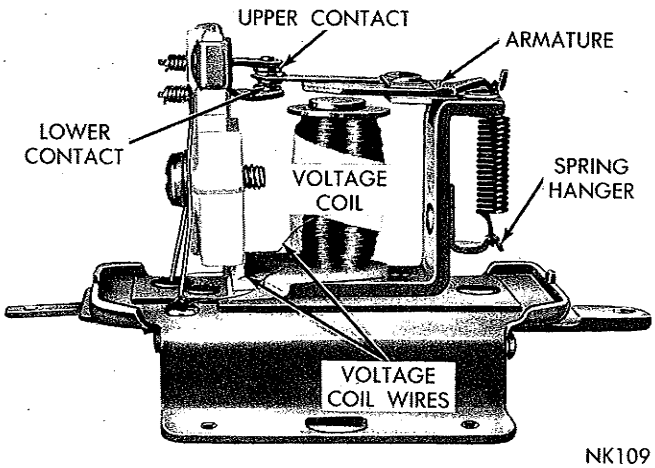


*Fig. 8—Voltage Regulator (Cover Removed)*

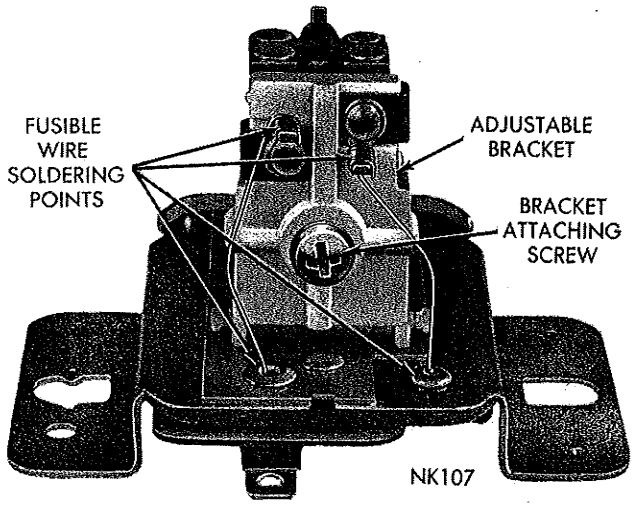


*Fig. 9—Voltage Regulator Fusible Wires*

MyMopar.com

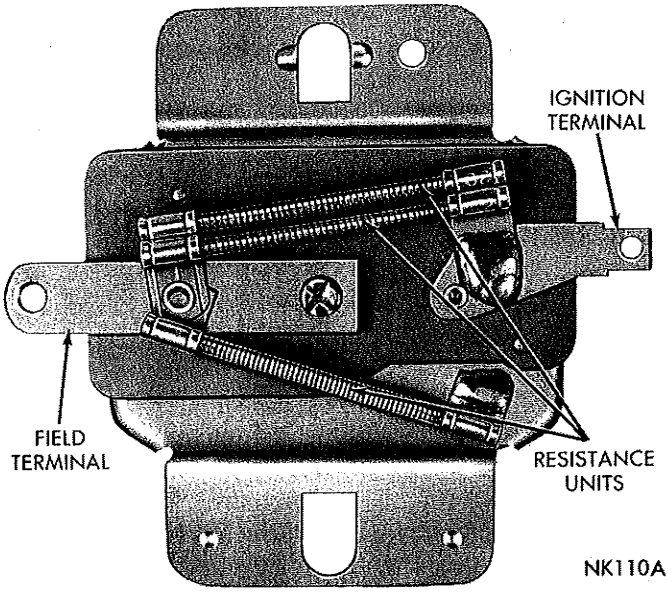


*Fig. 10—Voltage Regulator Resistance Units*

As the battery line voltage increases, the magnetic pull of the voltage coil overcomes the armature spring tension, and "opens" the upper contacts. The armature contacts at this time do not touch either the upper or lower stationary contacts. Field current now flows through the regulator "IGN" terminal, through resistance number one and number two, through the "FLD" terminal, and through the rotor field to ground.

The two resistors, in series with the field circuit, reduce field current and rotor field strength, with a corresponding reduction in alternator output voltage. This momentarily reduces battery line voltage applied to the regulator voltage coil. The regulator armature spring tension overcomes the magnetic pull of the voltage coil, closing the upper contacts.

When the electrical load requirements are relatively high, the regulator armature oscillates, opening and closing the upper contacts. This alternately "puts in" and "takes out" resistance in the field circuit, and in effect limits the alternator output voltage.

When the electrical load requirements are low and the engine speed is high, the alternator output voltage tends to increase. The battery line voltage (now slightly increased) causes the regulator voltage coil magnetic force to pull the armature contact against the regulator lower stationary contact.

Field current flow is now through the regulator "IGN" terminal, resistors number one and number two, to the regulator "FLD" terminal. Since the regulator armature is connected to the "FLD" terminal and the lower contacts are closed, the current path is through the regulator armature to the movable contact and then through the lower contact to ground. This is because the resistance to ground is less than the alternator rotor field coil resistance.

By-passing the alternator field coil will cause the alternator output voltage and the battery line voltage to drop. This reduction in voltage will reduce the magnetic pull of the regulator voltage coil, to the extent that it cannot hold the armature contact against the stationary lower contact.

The armature moves into a "no contact" position between the upper and lower stationary contacts. This momentarily allows the field current to flow through resistors number one and number two, and through the rotor field coil to ground. At high engine speed and low electrical load operation, the armature oscillates between the "no contact" position, and contact with the lower stationary contact, to limit battery line voltage.

## VOLTAGE REGULATOR TEST (With VAT-20D Tester) (Fig. 11)

**Regulator Temperature should be normalized by operating with a 10 ampere load for 15 minutes just prior to testing.**

### *Tester Controls and Switches*

(1) Set Polarity Switch to NEGATIVE position.
(2) Set Tester Control Knob to DIRECT position.
(3) Set Voltage Switch to 2 VOLT position.
(4) Set Field Control to OPEN position.

### *Tester Lead Connections*

(1) Disconnect battery positive cable from battery post and install BATTERY POST ADAPTER between cable and post.

(2) Connect "BAT" lead of tester to stud on adapter.

(3) Connect "REG" lead of tester to binding post on adapter.

(4) Connect "GRD" lead of tester to battery negative terminal.

**THE BATTERY POST ADAPTER BY-PASS SWITCH must be open for all charging system tests. It is closed**

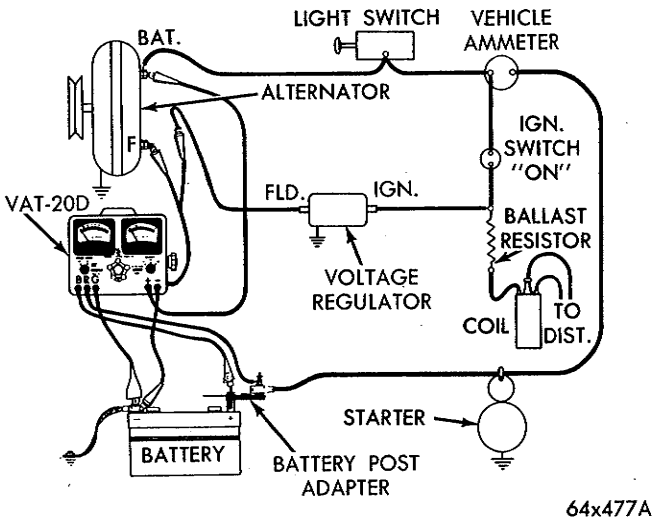


*Fig. 11—Voltage Regulator Test*

MyMopar.com

**for starting the engine.**

### *Upper Contacts Test*

(1) With ignition switch turned off, disconnect field wire from "FLD" terminal of alternator.

(2) Connect one of the test leads of Tester Field Control to "FLD" terminal of alternator.

(3) Connect other lead of Tester Field Control to field wire disconnected from alternator "FLD" terminal.

(4) Set Tester Voltage Switch to 16 VOLT position.

(5) Connect positive lead of Tester Voltmeter to "BAT" terminal of alternator.

(6) Connect negative lead of Test Voltmeter to battery negative terminal.

(7) Rotate Tester Field Control to the DIRECT position.

(8) With engine operating at 1250 RPM, rotate tester Control Knob clockwise until Ammeter reads exactly 15 amperes.

(9) Rotate tester Field Control from DIRECT position to OPEN position and then back to DIRECT position to cycle the system.

(10) Observe test voltmeter. Voltmeter now indicates setting of the voltage regulator upper contacts. Refer to "Specifications."

(11) Rotate tester Control Knob to DIRECT position. If regulator operates within specifications, proceed to lower contact voltage test. If upper contact voltage setting is not within specifications, remove regulator cover and adjust voltage setting as outlined in "Regulator Adjustments" step number (1).

### *Lower Contact Test*

(1) Increase engine speed to 2200 RPM.

(2) Rotate tester Control Knob to the ¼ OHM position only if tester Ammeter reads over 5 amperes.

(3) Rotate tester Field Control from DIRECT position to OPEN position and then back to DIRECT position to cycle the system.

(4) Observe the voltmeter. Voltmeter now indicates setting of voltage regulator lower contacts. Refer to Specifications.

Voltage should increase not less than .2 volt or more than .7 volt above previous operating voltage setting recorded in the upper contact test. A voltage reading of less than .2 volt or more than .7 volt is an indication of a possible wrong air gap setting. Refer to "Regulator Mechanical Adjustments."

(5) Rotate tester Field Control to OPEN position and Control Knob to DIRECT position.

Upon completion of test, reduce engine speed to idle, stop engine, and disconnect all test leads and adaptors. Be sure that all vehicle's cables and wiring connections are secure before restarting engine.

**CAUTION: Be sure negative post of battery is always connected to ground. Incorrect battery polarity may result in wiring harness damage and may damage alternator rectifiers. Do not ground alternator field circuit, as this may damage regulator.**

### *Adjusting the Voltage Setting to Driving Conditions*

Specifications called for in the voltage regulator chart indicate a tolerance of one volt from the low setting to high setting at temperatures indicated.

To maintain battery in a full state of charge, the voltage regulator should be adjusted to provide proper voltage limiting setting according to customer's driving and load requirement habits as follows:

(a) Check entire charging system and battery as outlined in this Service Manual.

(b) If there are no defects in the charging system or in the battery and the battery was found to be in a low state of charge, increase setting by .3 volt (do not exceed specified voltage limits) and retest for an improved battery condition after a reasonable service period (week or two). If battery state of charge has increased to a satisfactory level, do not change voltage setting. If battery shows evidence of over-charge—(low electrolyte level, high water consumption, excessive dampness on top of battery), decrease setting by .3 volt and retest for an improved battery condition after a reasonable service period (week or two).

**CAUTION: Always adjust settings in steps not to exceed .3 volt at a time. (Do not exceed specified voltage limits.)**

(c) The proper setting of the voltage regulator is attained when the battery remains at least 1.225 specific gravity in the winter or 1.245 specific gravity in the summer, with a minimum water requirement (not more than an ounce of water per cell per one thousand miles).

### *Regulator Mechanical Adjustments*

Step 1—Adjust upper contact voltage setting as necessary by bending regulator lower spring hanger **down** to **increase** voltage setting, **up** to **decrease** voltage setting. Use an insulated **tool** to bend spring hanger (Fig. 12). The regulator must be installed, correctly connected, and retested after each adjustment of lower spring hanger.

**If repeated readjustment is required, it is permissible to use a jumper wire to ground the regulator base to the fender splash shield for testing, in lieu of reinstalling regulator each time. However, it is important that regulator cover be reinstalled, regulator connections correctly connected, and regulator satisfactorily insulated by fender cover to prevent grounding regulator terminals or resistances. When testing, regulator must be at the same attitude (or angle) as when installed on vehicle. If step (1) under "Mechanical Adjustments" does not bring voltage regulator within specifications, proceed to Step (2) following:**

Step 2—Measure lower contact point gap. Lower contact gap should be .014 inch plus or minus .002

MyMopar.com

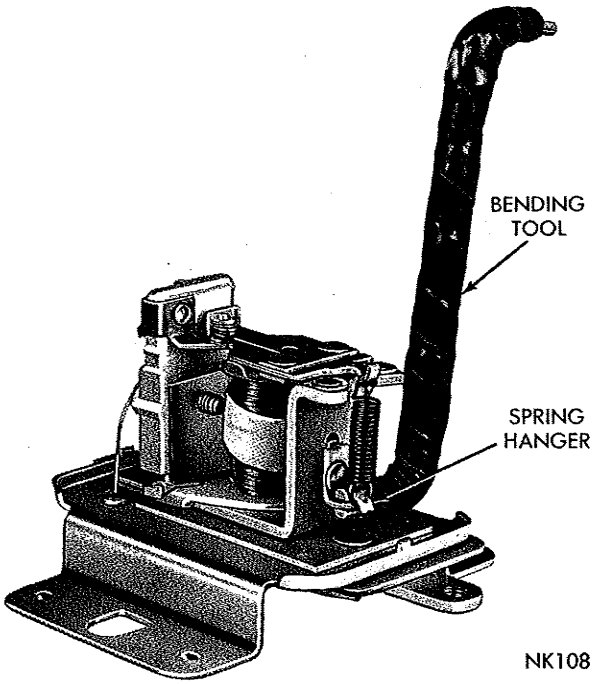


*Fig. 12—Adjusting the Spring Tension*

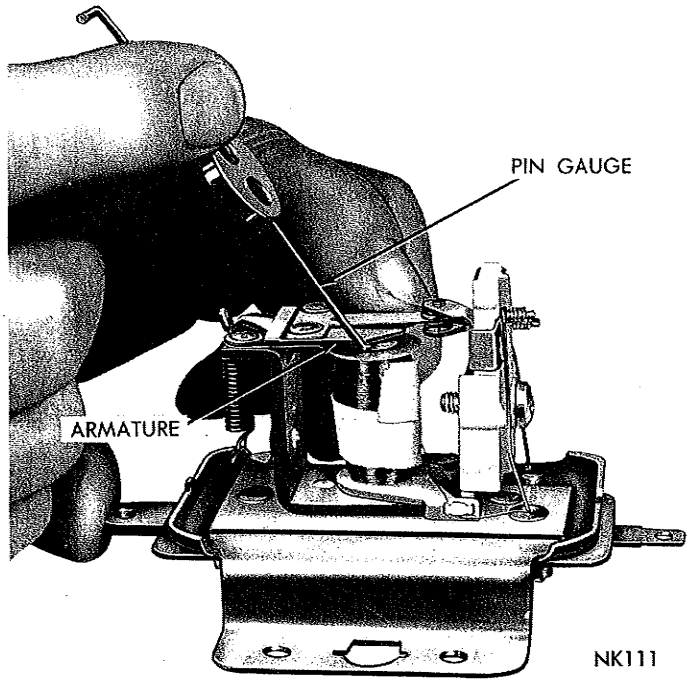


*Fig. 13—Testing the Air Gap*

inch. Adjust lower contact gap as necessary by bending lower stationary contact bracket making sure contacts are in alignment.

If lower contact gap is correct and voltage regulator setting is still outside the .2 to .7 volt increase, adjust air gap as follows:

(a) Connect a small dry cell test lamp in series with the "IGN" and "FLD" terminal of voltage regulator.

(b) Insert an .048 inch wire gauge between regulator armature and core of the voltage coil next to stop pin on armature (Fig. 13).

(c) Press down on armature (not on the contact reed) until armature contacts wire gauge. Upper contacts should just **open** and test lamp should be dim.

(d) Insert an .052 inch wire gauge between the armature and voltage coil core, next to the stop pin on armature.

(e) Press down on armature until it contacts wire gauge. The upper contacts should remain **closed** and test lamp should remain **bright.**

If an adjustment is required to obtain the difference between the upper contact voltage and lower contact voltage of .2 volt to .7 volts adjust the air gap by loosening the stationary contact bracket screw and moving bracket up or down as necessary to obtain proper air gap setting as follows:

If the difference is above .7 volt, reduce air gap to a minimum of .045 inch with contacts open and test lamp dim. At .048 inch contacts should close and test lamp should be bright.

If the difference is below .2 volt, increase air gap to a maximum of .055 inch with contacts closed and test lamp bright. At .052 inch contacts should be open and test lamp should be dim.

**Make sure air gap is checked with stationary contact bracket attaching screw fully tightened.**

### *Voltage Regulator Fusible Wire Replacement*

(1) Cut fuse wire above solder connection at the base and unwind wire at top bracket.

**CAUTION: If an attempt is made to unsolder the old fuse, the very small wire from voltage coil may be damaged.**

(2) Tin end of fuse wire. **Use resin core solder only.**

(3) Holding tinned end of new fuse wire into recessed rivet at base of regulator and against old piece of fuse wire that remains, cause a drop of solder from soldering iron to fall on these parts. Allow solder to cool sufficiently for fuse wires to make a good solder joint.

(4) Pull new fuse wire up enough to remove slack and wrap it around the bracket. Solder coiled wire to the bracket and cut off surplus fuse wire.

**The original fuse wire is machine wound on the upper bracket. Replacement fuse should be soldered to the bracket to ensure a good electrical contact.**

MyMopar.com

# VOLTAGE REGULATOR

## ESSEX BUILT

### GENERAL INFORMATION

The only function of the regulator is to limit the output voltage. The voltage regulator accomplishes this by controlling the flow of current in the rotor field coil, and in effect controls the strength of the rotor magnetic field.

The voltage regulator is connected in the field circuit between the battery and the field terminal of the alternator. One terminal of the regulator is marked "IGN" and the other is marked "FLD." The "IGN" terminal of the regulator is connected to the coil side of the ignition switch so that the field circuit is completed **only** when the ignition switch is turned "ON."

The voltage regulator has two sets of contacts moving with the regulator armature (Fig. 14). The common upper and lower stationary contacts are mounted on a bracket which is attached to but insulated from the regulator frame. The lower contact mounted on the armature is connected to the "IGN" terminal. The upper contact, mounted on the armature, but insulated from it, is connected to ground by a flexible wire. The stationary contacts are connected to the "FLD" terminal by a fusible wire (Fig. 15).

Four resistance units are used (Fig. 16). Resistor number "one" and number "two" are connected between the "IGN" and "FLD" terminals, in parallel with the lower set of contacts. Resistor number "three" is connected between the "FLD" terminal and ground. Its function is to reduce arcing at the regulator contacts.

A voltage coil, (Fig. 14) consisting of many turns of fine wire, is connected in series with resistor number "four" between the "IGN" terminal of the regulator and "ground." Thus, when the ignition switch is turned "ON," battery voltage applied to the windings

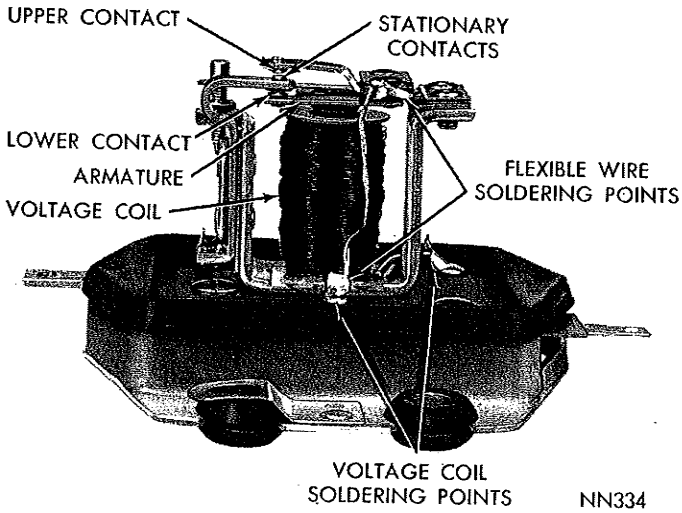


*Fig. 14—Voltage Regulator (Cover Removed)*

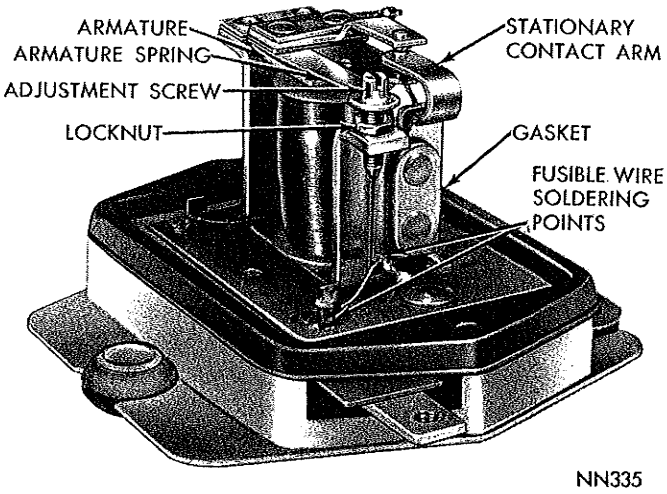


*Fig. 15—Voltage Regulator Fusible Wire*

energizes the coil and the magnetic force of the coil tends to attract the regulator armature.

When the battery line voltage is relatively low, the current flow through the voltage coil will be low. The magnetic force (or pull) of the voltage coil will not be great enough to overcome the regulator armature spring tension, which is holding the armature contact against the lower stationary contact (Fig. 14).

Battery line voltage applied to the "IGN" terminal causes current to flow through the regulator upper contacts, through the FLD" terminal of the regulator and to the "insulated" brush and rotor slip ring. The rotor field coil circuit is completed to "ground" through the other rotor slip ring and the "ground" brush. Inasmuch as the upper contacts are "closed," the field circuit resistance is low, and maximum current will flow through the rotor field coil. The rotor field strength will be high, and the alternator output

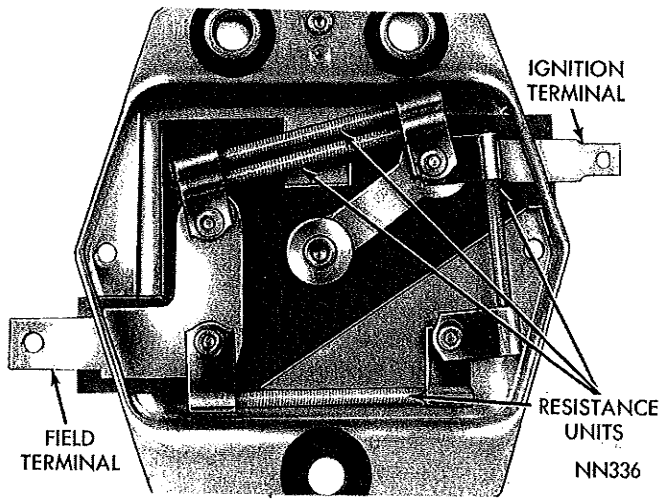


*Fig. 16—Voltage Regulator Resistance Units*

MyMopar.com

will be at its maximum for any rotor speed.

As the battery line voltage increases, the magnetic pull of the voltage coil overcomes the armature spring tension, and "opens" the lower contacts. The stationary contacts at this time do not touch either the upper or lower armature contacts. Field current now flows through the regulator "IGN" terminal, through resistance number "one" and number "two," through the "FLD" terminal, and through the rotor field ground.

The two resistors, in series with the field circuit, reduce field current and rotor field strength, with a corresponding reduction in alterator output voltage. This momentarily reduces battery line voltage applied to the regulator voltage coil. The regulator armature spring tension overcomes the magnetic pull of the voltage coil, closing the lower contacts.

When the electrical load requirements are relatively high, the regulator armature oscillates, opening and closing the lower contacts. This alternately "puts in" and "takes out" resistance in the field circuit, and in effect limits the alternator output voltage.

When the electrical load requirements are low and the engine speed is high, the alternator output voltage tends to increase. The battery line voltage (now slightly increased) causes the regulator voltage coil magnetic force to pull the grounded armature contact against the regulator upper stationary contact. The "FLD" terminal is now connected to ground.

Field current flow is now through the regulator "IGN" terminal, resistors number one and number two, to the regulator "FLD" terminal, and hence to ground. This is because the resistance to ground is less than the alternator rotor field coil resistance.

By-passing the alternator field coil will cause the alternator output voltage and the battery line voltage to drop. This reduction in voltage will reduce the magnetic pull of the regulator voltage coil, to the extent that it cannot hold the armature contact against the stationary upper contact.

The armature moves into a "no contact" position about the upper and lower stationary contacts. This momentarily allows the field current to flow through resistors number one and number two, and through the rotor field coil to ground. At high engine speed and low electrical load operation, the armature oscillates between the "no contact" position, and contact with the upper stationary contact, to limit the battery line voltage.

## SERVICE PROCEDURES

### VOLTAGE REGULATOR TEST

### (With VAT-20D Tester) (Fig. 11)

**Regulator temperature should be normalized by operating with a 10 ampere lead for 15 minutes just prior to testing.**

#### *Tester Controls and Switches*

(1) Set Polarity Switch to NEGATIVE position.
(2) Set Tester Control Knob to DIRECT position.
(3) Set Voltage Switch to 2 VOLT position.
(4) Set Field Control to OPEN position.

#### *Tester Lead Connections*

(1) Disconnect battery positive cable from battery post and install BATTERY POST ADAPTER between cable and post.
(2) Connect "BAT" lead of Tester to stud on adapter.
(3) Connect "REG" lead of Tester to binding post on adapter.
(4) Connect "GRD" lead of Tester to battery negative terminal.

**THE BATTERY POST ADAPTER BY-PASS SWITCH must be open for all charging system tests. It is closed for starting the engine.**

#### *Lower Contacts Test*

(1) With ignition switch turned off, disconnect field wire from "FLD" terminal of alternator.
(2) Connect one of the test leads of Tester Field Control to "FLD" terminal of alternator.
(3) Connect other lead of Tester Field Control to field wire disconnected from alternator "FLD" terminal.
(4) Set Tester Voltage Switch to 16 VOLT position.
(5) Connect positive lead of Tester Voltmeter to "BAT" terminal of alternator.
(6) Connect negative lead of Tester Voltmeter to battery negative terminal.
(7) Rotate Tester Field Control to the DIRECT position.
(8) With engine operating at 1250 RPM, rotate Tester Control Knob clockwise until Ammeter reads exactly 15 amperes.
(9) Rotate Tester Field Control from DIRECT position to OPEN position and then back to DIRECT position to cycle the system.
(10) Observe Tester Voltmeter. Voltmeter now indicates setting of voltage regulator upper contacts. Refer to "Specifications."
(11) Rotate Tester Control Knob to DIRECT position. If regulator operates within specifications, proceed to lower contact voltage test. If upper contact voltage setting is not within specifications, adjust voltage setting as outlined in "Regulator Adjustments" test number (1).

#### *Upper Contact Test*

(1) Increase engine speed to 2200 RPM.

MyMopar.com

(2) Rotate Tester Control Knob to ¼ OHM position only if Tester Ammeter reads over 5 amperes.

(3) Rotate Tester Field Control from the DIRECT position to the OPEN position and then back to the DIRECT position to cycle the system.

(4) Observe voltmeter. Voltmeter now indicates setting of the voltage regulator upper contacts. Refer to "Specifications."

Voltage should increase not less than .2 volt or more than .7 volt above previous operating voltage setting recorded in lower contact test. A voltage reading of less than .2 volt or more than .7 volt is an indication of a possible wrong air gap setting, Refer to "Regulator Mechanical Adjustments".

(5) Rotate Tester Field Control to OPEN position and Control Knob to DIRECT position.

Upon completion of test, reduce engine speed to idle, stop engine, and disconnect all test leads and adaptors. Be sure that all vehicle's cables and wiring connections are secure before restarting engine.

**CAUTION: Be sure the negative post of battery is always connected to ground. Incorrect battery polarity may result in wiring harness damage and may damage alternator rectifiers. Do not ground alternator field circuit, as this may damage the regulator.**

### *Adjusting the Voltage Setting to Driving Conditions*

Specifications called for in the voltage regulator chart indicates a tolerance of one volt from the low setting to the high setting at the temperatures indicated.

To maintain the battery in a full state of charge, the voltage regulator should be adjusted to provide proper voltage limiting setting according to the customer's driving and lead requirement habits as follows:

(1) Check entire charging system and battery as outlined in this Service Manual.

(2) If there are no defects in the charging system or in the battery and the battery was found to be in a low state of charge, increase setting by .3 volt (do not exceed specified voltage limits) and retest for an improved battery condition after a reasonable service period (week or two). If battery state of charge has increased to a satisfactory level, do not change voltage setting. If the battery shows evidence of overcharge—(low electrolyte level, high water consumption, excessive dampness on top of battery), decrease setting by .3 volt and retest for an improved battery condition after a reasonable service period (week or two).

**CAUTION: Always adjust settings in steps not to exceed .3 volt at a time. (Do not exceed specified voltage limits).**

(3) The proper setting of the voltage regulator is attained when battery remains at least 1.225 specific gravity in the winter or 1.245 specific gravity in the summer, with a minimum water requirement (not more than an ounce of water per cell per one thousand miles).

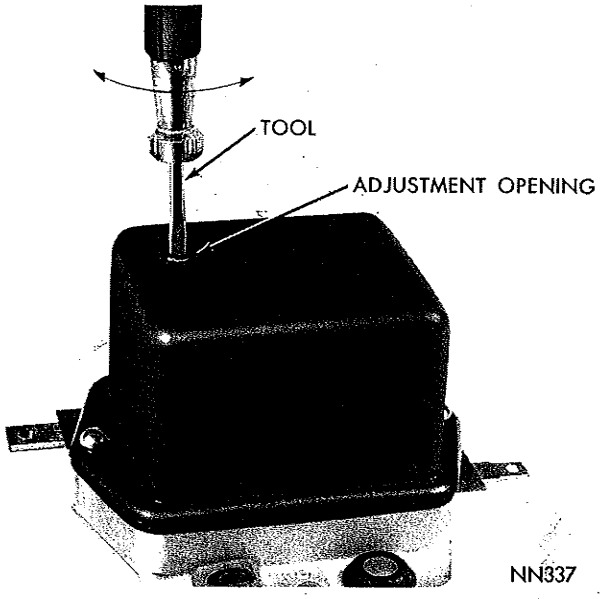


***Fig. 17—Lower Contact Voltage Adjustment***

### *Regulator Mechanical Adjustments*

**Step One**—Adjust lower contact voltage settings as necessary by turning the adjustment screw (Figs. **15** and **17**) clockwise to increase voltage or counterclockwise to decrease voltage.

**Step Two**—Measure upper contact point gap. Upper contact gap should be .014 inch, plus or minus .004 inch. Adjust upper contact gap as necessary by bending armature upper contact bracket (Fig. **18**), making sure contacts are in alignment.

If upper contact gap is correct and voltage regulator setting is still outside the .2 to .7 volt increase, adjust air gap as follows:

**If the difference is above .7 volt, reduce air gap by bending down the fixed contact bracket (Fig. 19). If the difference is below .2 volt, increase air gap by bending fixed contact bracket (Fig. 19) up.**

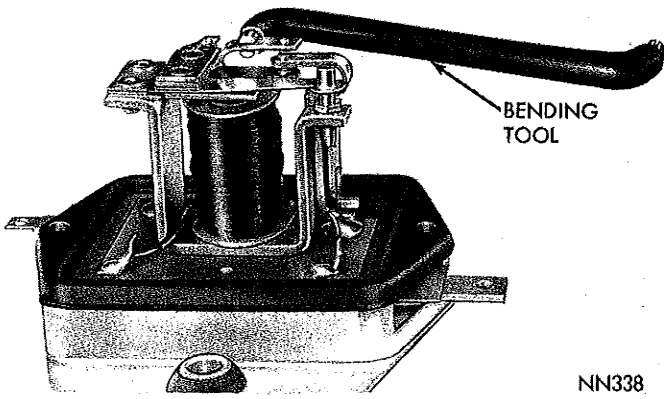


***Fig. 18—Bending Upper Contact Arm***

MyMopar.com

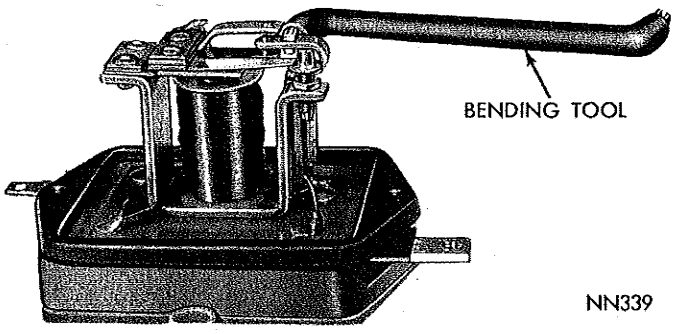


*Fig. 19—Bending Stationary Contact Arm*

(a) Connect a small dry cell test lamp in series with the "IGN" and "FLD" terminal of the voltage regulator.

(b) Insert a .032 inch wire gauge between regulator armature and core of voltage coil next to stop pin on the armature (Fig. **20**), and press down on the armature until armature contacts wire gauge. Lower contacts should just open and test lamp should be dim.

(c) With air gap adjusted as in step (b), a .042 inch wire gauge cannot be inserted between the armature and voltage core.

**Voltage Regulator Fusible Wire Replacement**

Install a new fuse wire. Solder both ends of a new fuse wire securely using only resin core solder.

## ALTERNATOR SERVICE PROCEDURES

If alternator performance does not meet current output specifications limits, it will have to be removed and disassembled for further testing and servicing.

(1) Disconnect battery ground cable at battery negative terminal.

(2) Disconnect alternator output "BATT" and field "FLD" leads and disconnect ground wire.

(3) Remove alternator mounting bolts and remove alternator.

## BENCH TESTS

### *Field Coil Draw*

If alternator field coil draw has not been tested on vehicle it may be tested on test bench as follows:

(1) Connect test ammeter positive lead to battery positive terminal of a fully charged battery. Connect test ammeter negative lead to field terminal of alternator. Connect a jumber wire to negative terminal of battery, and ground it to alternator end shield.

(2) Slowly rotate alternator rotor by hand. Observe ammeter reading. Field coil draw should be 2.3 amperes to 2.7 amperes at 12 volts.

**A low rotor coil draw is an indication of high resistance in field coil circuit, (brushes, slip rings, or rotor coil). A higher rotor coil draw indicates possible shorted rotor coil or grounded rotor.**

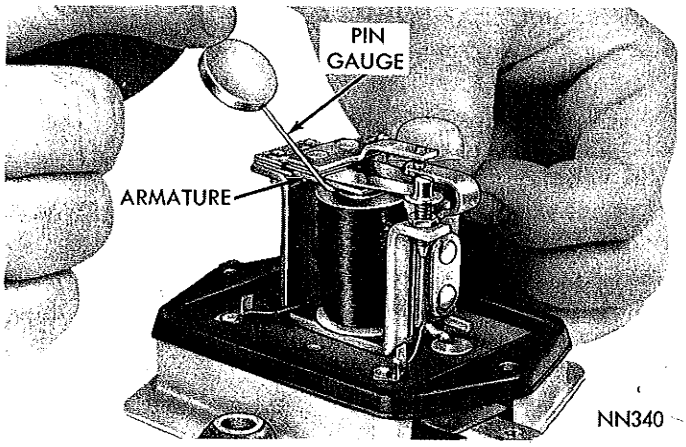


*Fig. 20—Testing Air Gap*

### *Testing Alternator Internal Field Circuit for Ground*

(1) To test internal field circuit for ground, remove ground brush. Touch one test prod from a 110 volt test lamp to the alternator insulated brush terminal and remaining test prod to end shield. If rotor assembly or insulated brush is not grounded, lamp will not light.

(2) If lamp lights, remove insulated brush assembly (noting how the parts are assembled) and separate the end shields by removing the three through bolts.

(3) Again test by placing one of the test prods to a slip ring and remaining test prod to end shield. If lamp lights, rotor assembly is grounded and requires replacement. If lamp does not light after removing the insulated brush and separating the end shields, the cause of the ground at the first ground test was a grounded insulated brush.

(4) Examine plastic insulator and screw. Screw is a special size and must not be substituted by another size.

(5) Install insulated brush holder, terminal, insulated washer, shake proof washer and screw. If the

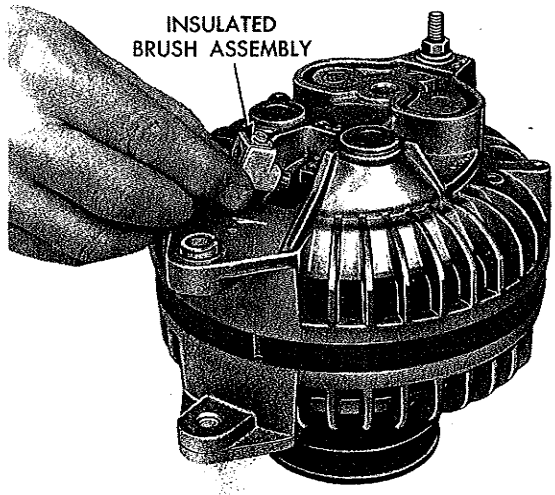


*Fig. 21—Removing or Installing Insulated Brush*

MyMopar.com

parts were not assembled in this order or if wrong screw was used this could be the cause of the ground condition.

## DISASSEMBLING THE ALTERNATOR

To prevent possible damage to brush assemblies, they should be removed before proceeding with disassembly of the alternator. The insulated brush is mounted in a plastic holder that positions brush vertically against one of the slip rings.

(1) Remove retaining screw lockwasher, insulated washer, and field terminal, and carefully lift plastic holder containing spring and brush assembly from end housing, (Fig. 21).

(2) The ground brush is positioned horizontally against remaining slip ring and is retained in a holder that is integral with end shield. Remove retaining screw and lift clip, spring and brush assembly from end shield, (Fig. 22).

**CAUTION: Stator is laminated, do not burr stator or end shield.**

(3) Remove through bolts and pry between the stator and drive end shield with blade of a screwdriver, (Fig. 23). Carefully separate drive end shield, pulley and rotor assembly away from stator and rectifier shield assembly.

### *Testing the Rectifiers with Tool C-3829*

The Rectifier Tester Tool C-3829 provides a quick, simple and accurate test of the alternator rectifiers without the necessity of disconnecting soldered rectifier leads. With alternator rectifier end shield separated from drive end housing proceed with rectifier tests as follows:

### *Positive Case Rectifier Test (Fig. 24)*

(a) Place alternator on an insulated surface. Connect test lead clip to the alternator ("BAT") output terminal.

(b) Plug in Tool C-3829 power source lead into a 110 Volt A.C. power supply. Touch exposed bare

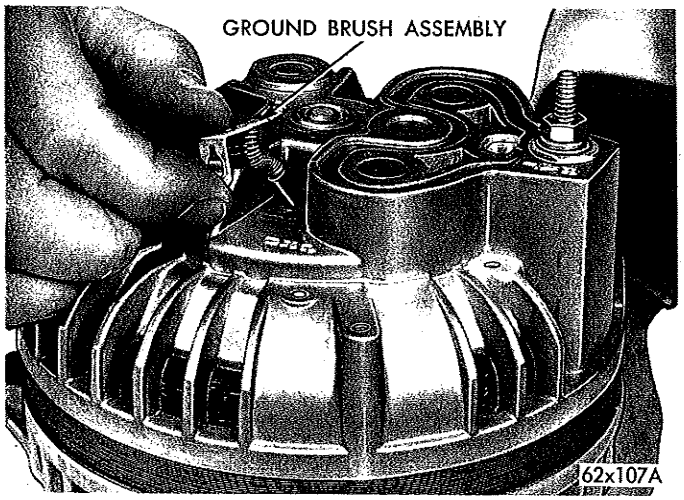


*Fig. 22—Removing or Installing Ground Brush*

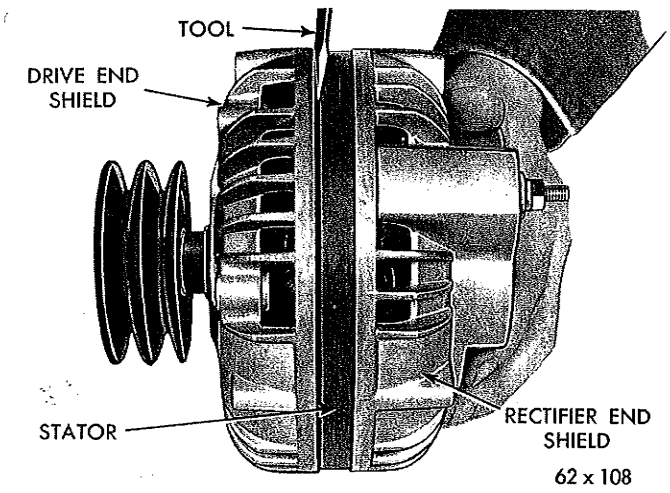


*Fig. 23—Separating Drive End Shield from Stator*

metal connections of each of the positive case rectifiers, with test prod.

**CAUTION: Do not break the sealing around rectifier lead wire. The sealing material is for protection against corrosion. Always touch test prod to exposed metal connection nearest rectifier.**

The reading for satisfactory rectifiers will be 1¾ amperes or more. Reading should be approximately the same for the three rectifiers.

When two rectifiers are good and one is shorted, reading taken at the good rectifiers will be low, and reading at shorted rectifier will be zero. Disconnect lead to the rectifier reading zero and retest. The reading of the good rectifiers will now be within satisfactory range.

When one rectifier is open it will read approximately one ampere, and two good rectifiers will read within satisfactory range.

### *Negative Case Rectifier Test (Fig. 25)*

(a) Connect test lead clip to rectifier end housing.

(b) Touch exposed connection of each of the negative case rectifiers with test prod.

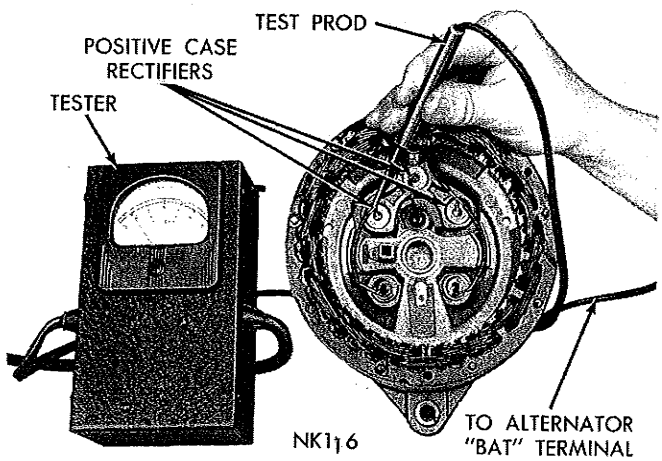


*Fig. 24—Testing Positive Rectifiers*

MyMopar.com

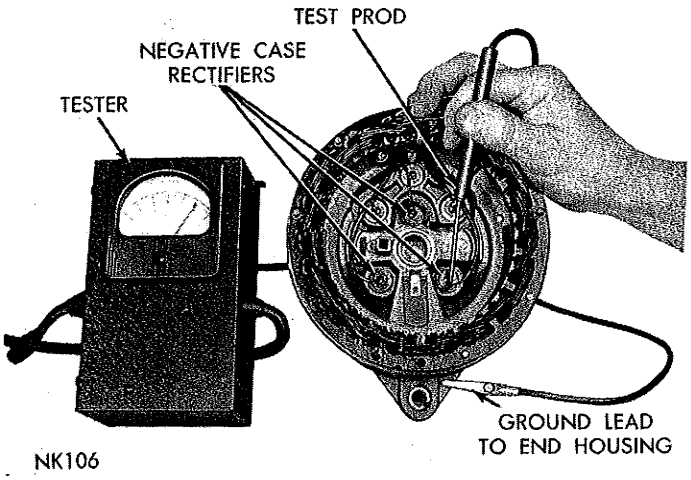


*Fig. 25—Testing Negative Rectifiers*

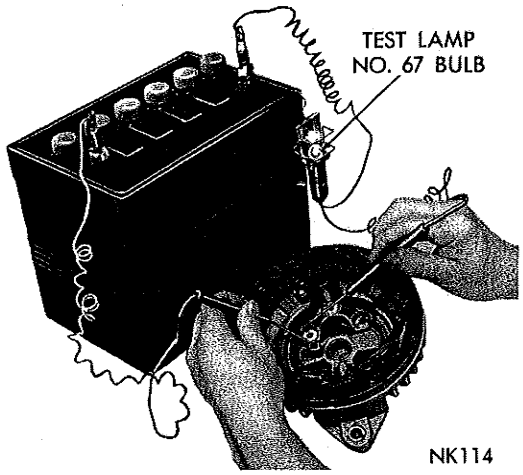


*Fig. 27—Testing Rectifiers with Test Lamp*

Test specifications are the same, and test results will be approximately the same as for positive case rectifiers, except meter will read on opposite side of scale.

### *Testing Rectifiers and Stator*

(When Tool C-3829 is not available)

(a) Separate the three (3) stator leads at "Y" connection (Fig. 26). **Cut stator connection as close to connector as possible. If they are cut too short it may be difficult to get them together again for soldering.**

(b) Test rectifiers with a 12 volt battery and a test lamp equipped with a number 67 bulb (4 candle power) by connecting one side of test lamp to positive battery post; other side of test lamp to a test probe with other test probe connected to the negative battery post.

(c) Contact outer case of rectifier with one probe and other probe to the wire in center of rectifier (Fig. 27).

(d) Reverse the probes, moving probe from rectifier outer case to rectifier wire, and the probe from rectifier wire to rectifier outer case.

If test lamp "lights" in one direction but does "not light" in other direction, rectifier is satisfactory. If lamp lights in "both directions," **rectifier** is "shorted." If test lamp does "not light" in either direction, rectifier is "open." **Possible cause of an open or blown rectifier is a faulty capacitor or a battery that has been installed in reverse polarity. If battery is installed properly and the rectifiers are open, test capacitor capacity—.50 microfarad (plus or minus 20%).**

(e) Unsolder rectifier leads from stator leads.

(f) Test stator for grounds using a 110 volt test lamp (Fig. 28). Use wood slats to insulate the stator from rectifier shield. Contact one prod of test lamp to stator pole frame, and contact the other prod to each of the three stator leads. Test lamp should "not light." If test lamp lights, stator windings are "grounded."

(g) Test stator windings for continuity, by contacting one prod of test lamp to all three stator leads at "Y" connection. Contact each of the three stator leads (disconnected from rectifiers). Test lamp should

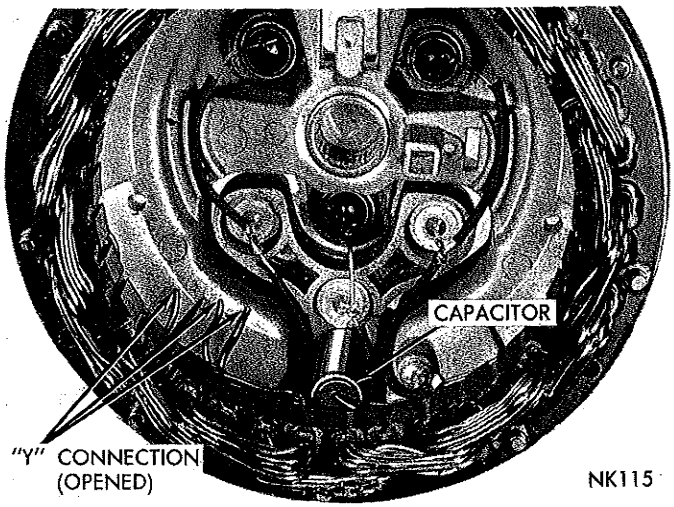


*Fig. 26—Separating the Three Stator Leads*

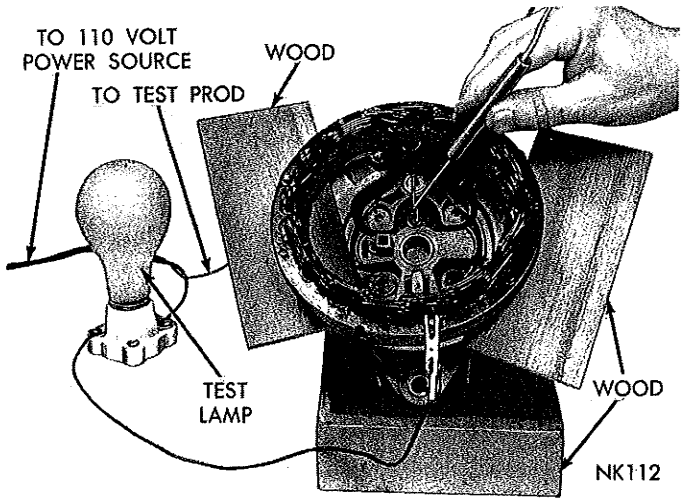


*Fig. 28—Testing Stator for Grounds*

MyMopar.com

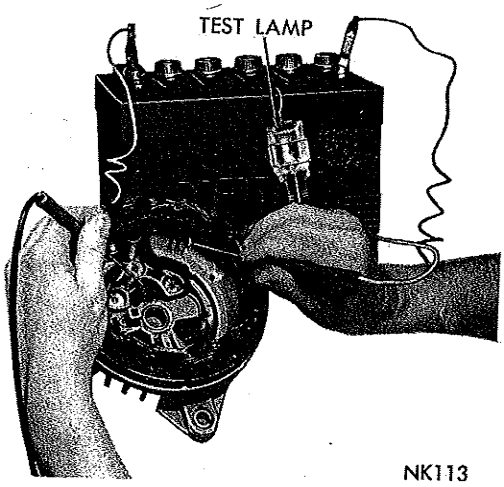


*Fig. 29—Testing Stator Windings for Continuity*

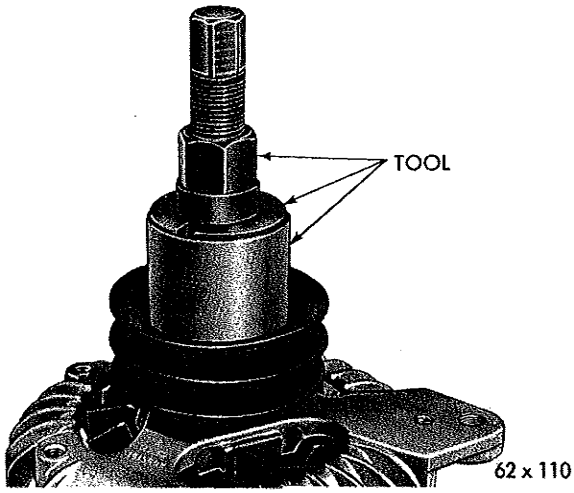


*Fig. 31—Removing the Pulley*

"light" when prod contacts each of the three leads. If test lamp does not light stator winding is "open" (Fig. 29).

(h) Install a new stator if stator tested is "grounded" or "open." If the rectifiers must be replaced unsolder the rectifier wire from the stator lead wire at the soldered joint. **Three rectifiers are pressed into the heat sink and three in end shield. When removing rectifiers, it is necessary to support end shield and/or heat sink to prevent damage to these castings.**

(4) Cut lead at malfunctioning rectifier.

(5) Place C-3928 Rectifier Removing and Installing Press in a vise and support end shield on clamp anvil under rectifier to be removed (Fig. 30). **Support tool adapter SP-3821 is cut-away and slotted to fit over wires and around bosses in end shield. Make sure bore of tool completely surrounds rectifier during removal process.**

(6) Carefully apply pressure with tool pressure screw until support tool, rectifier end shield, and remover pin, and remover adapter are in alignment, then press the rectifier out of end shield or heat sink.

(7) The pulley is an interference fit on rotor shaft. Remove pulley with Puller Tool C-3615 or C-3934 and special adapters (Fig. 31).

(8) Pry drive end bearing spring retainer from end shield with a screwdriver (Fig. 32).

(9) Support end shield and tap rotor shaft with a plastic hammer to separate rotor from end shield. **The new bearing is lubricated with a predetermined amount of special lubricant and does not require additional lubrication.**

(10) The drive end ball bearing is an interference fit with the rotor shaft. Remove bearing with puller Tool C-3615 or C-3934 and adapters as follows:

(a) Position center screw of Tool on rotor shaft.

(b) Place thin lower end of adapters SP-3375 under bearing equally spaced with upper end of adapters around center screw.

(c) Hold adapter and center screw in position with tool sleeve.

**CAUTION: The tool sleeve must bottom on bearings,**

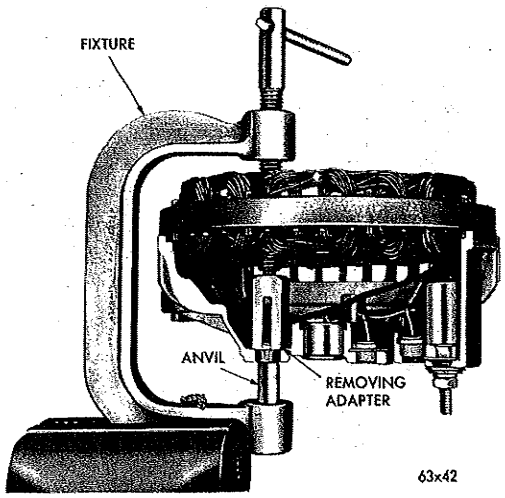


*Fig. 30—Removing the Rectifiers*

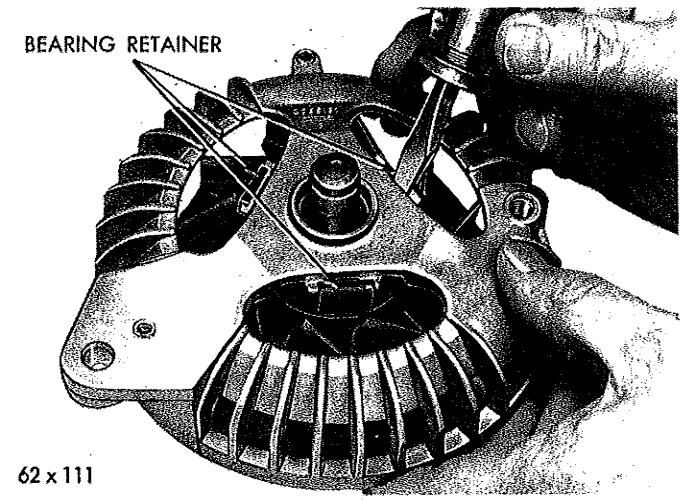


*Fig. 32—Disengaging Bearing Retainer from End Shield*

MyMopar.com

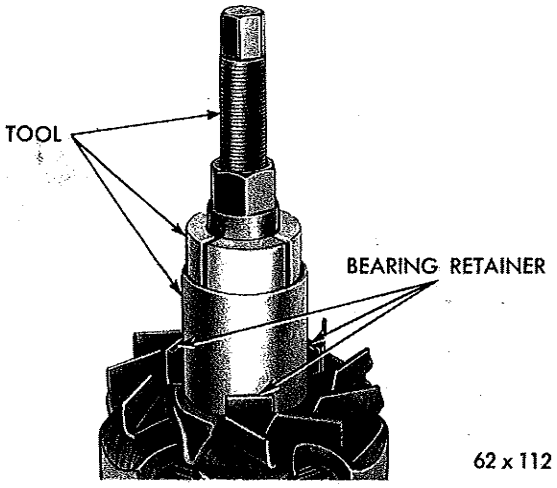


*Fig. 33—Removing Bearing from Rotor Shaft*

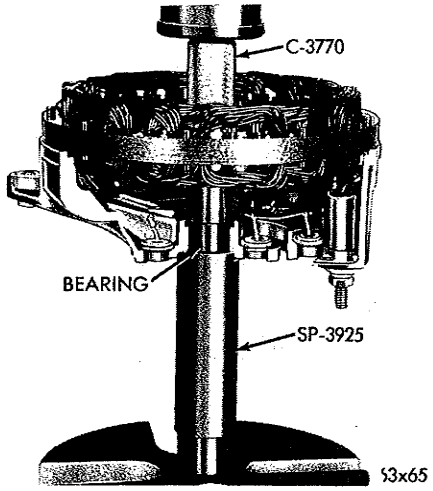


*Fig. 35—Removing Rectifier End Shield Bearing*

**otherwise adapters may be damaged.**

(d) Turning center screw while holding outer body of the tool (Fig. 33) will withdraw bearing from rotor shaft.

(11) Remove D.C. output terminal nuts and washers and remove terminal screw and inside capacitor.

**The heat sink is also held in place by the terminal screw.**

(12) Remove insulator (Fig. 34).

(13) The needle roller bearing in rectifier end shield is a press fit. If necessary to remove rectifier end frame needle bearing, protect end shield by supporting shield with Tool SP-3925 when pressing bearing out with Tool C-3770A (Fig. 35). Make sure notches in tool clear raised section of heat sink.

**The new bearing is pre-lubricated and no additional lubricant should be added, as an excessive amount of lubricant will contaminate the slip rings and cause premature brush and rotor failures.**

## REPLACING SLIP RINGS

Slip rings that are damaged can be replaced as follows:

(a) Cut through rotor grease retainer with a chisel and remove the retainer.

(b) Unsolder field coil leads at solder lugs (Fig. 36).

(c) Cut through copper of both slip rings at opposite points 180° apart) with a chisel (Fig. 37).

(d) Break insulator and remove the old ring.

(e) Clean away dirt and particles of old slip ring from rotor.

(f) Scrape ends of field coil lead wires clean for good electrical contact.

(g) Scrape one end (about 3/16 inch) of a piece of bare wire (approx. 18 gauge) three inches long (to be used as a guide wire).

(h) Tin scraped area of guide wire with resin core solder. Lap tinned end of wire over field coil lead to the insulated ring and solder the two together.

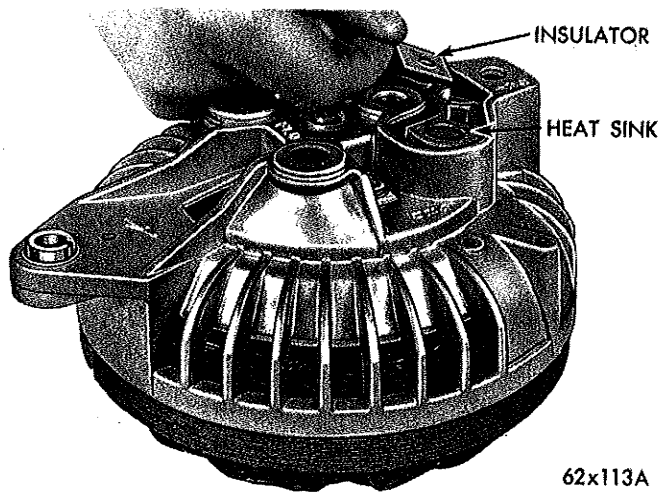


*Fig. 34—Removing Heat Sink Insulator*

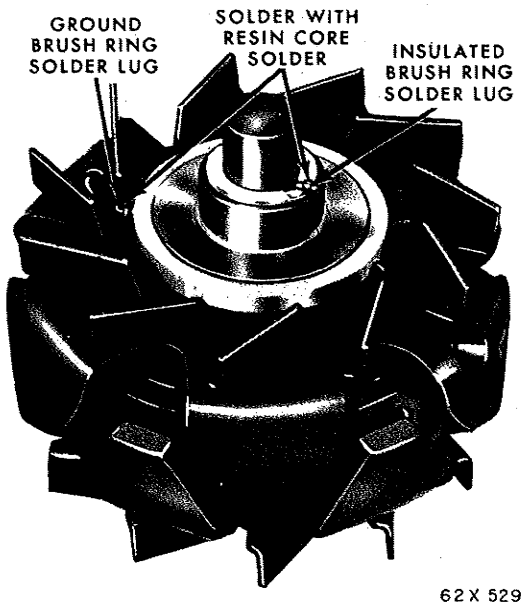


*Fig. 36—Solder Points - Slip Ring Installed*

MyMopar.com

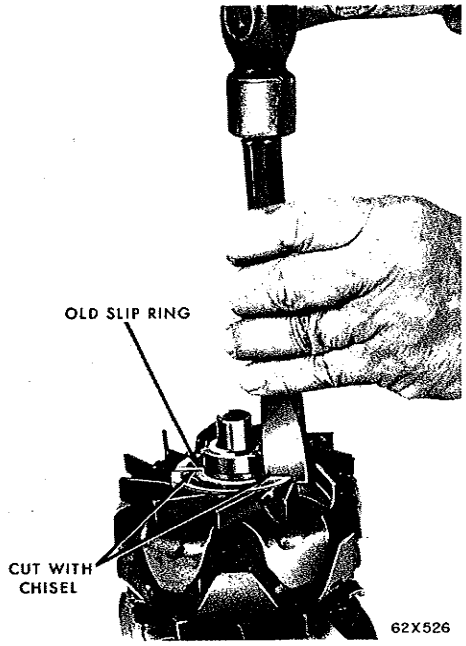


*Fig. 37—Cutting Old Slip Rings*

(i) Position new slip ring carefully over guide wire and rotor shaft so wire will lay in slip ring groove (Fig. 38). The groove in slip ring must be in line with insulated brush field lead to provide room for the lead without damaging it.

(j) Place installing Tool C-3900 over rotor shaft with guide wire protruding from slot in tool.

(k) Position rotor, slip ring and tool assembly in an arbor press (Fig. 39). Pull up on guide wire being careful to guide insulated field lead into slip ring groove. While guiding insulated field lead through the groove, press slip ring on shaft. When slip ring is bottomed on rotor fan, the end of field lead (insulated brush ring) should be visible at solder lug (Fig. 36).

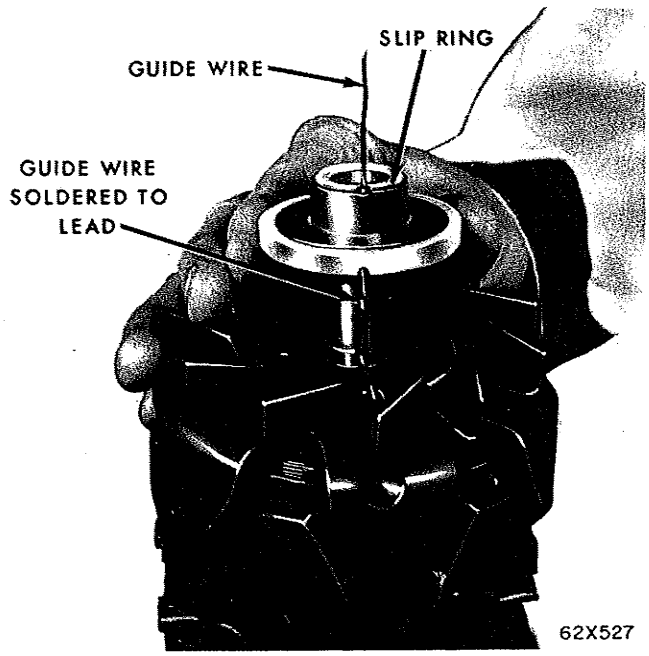


*Fig. 38—Aligning Slip Ring with Field Wire and Guide Wire*

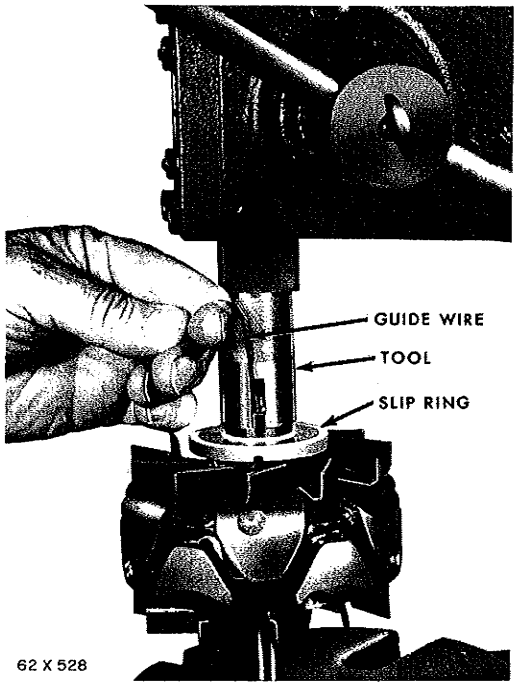


*Fig. 39—Installing Slip Ring*

(l) Unsolder guide wire from insulated brush slip ring lead. Press field lead into solder lug and solder the lead to the lug with resin core solder.

**CAUTION: Be sure solder bead does not protrude beyond surface of plastic material. Do not use acid core solder as a short circuit may result and corrosion will definitely occur.**

(m) Coil ground brush ring field lead around solder lug and solder with resin core solder.

(n) Test slip rings for ground with a 110 volt test lamp by touching one test lead prod to rotor pole shoe and remaining prod to slip rings. Test lamp should not light. If lamp lights, slip rings are shorted to ground, possibly due to grounding insulated field lead

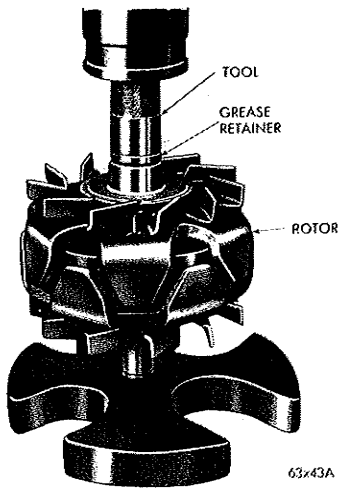


*Fig. 40—Installing Bearing Grease Retainer*

MyMopar.com

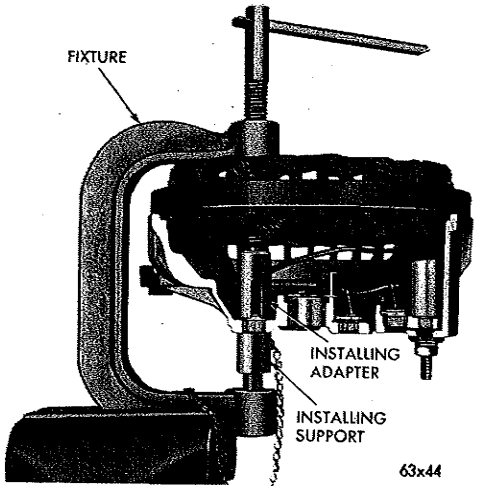


*Fig. 41—Installing a Rectifier*

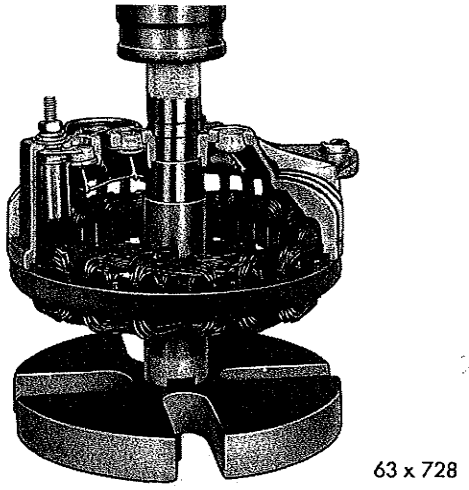


*Fig. 43—Installing Rectifier End Shield Bearings*

when installing slip ring.

If rotor is not grounded, lightly clean slip ring surfaces with -00- sandpaper.

(o) Position grease retainer on rotor shaft and press retainer on shaft with installer Tool C-3921 (Fig. 40). The retainer is properly positioned when the inner bore of installer tool bottoms on the rotor shaft.

## ASSEMBLING THE ALTERNATOR

(1) Check rectifier identification to make sure correct rectifier is being installed. Refer to Parts List for rectifier identification.

(2) Start rectifier squarely into mounting hole.

(3) Support heat sink or rectifier end shield on installer adapter of Tool C-3928. With the installing adapter positioned on the rectifier, carefully apply pressure with tool pressure screw until the installer tool, rectifier, rectifier end shield or heat sink are in alignment and after determining that rectifier is started squarely in the casting, slowly apply pressure with tool pressure screw until you feel the collar of the rectifier bottom against casting (Fig. 41). **Make sure installer support adapter fits square around the rectifier inner boss and that pressure is applied on outer rim of rectifier.**

**CAUTION: DO NOT USE a hammer to start the rectifier into its bore in end shield. DO NOT HAMMER OR SHOCK the rectifier in any manner as this will fracture the thin silicon wafer in the rectifier causing complete rectifier failure.**

(4) Clean the leads and mate stator lead with rectifier wire and bend the loop snugly around stator lead to provide a good electrical and mechanical connection. Solder wires with resin core solder. Hold rectifier lead wire with pliers just below the joint while soldering (Fig. 42). Pliers will absorb heat from the soldering operation and protect rectifier. **After soldering, quickly cool soldered connection; touch a dampened cloth against it. This will aid in forming a solid joint.**

(5) After soldering, stator leads must be pushed down into the slots that are cast into the end shield and cemented with MoPar Cement Part Number 2299314 or equivalent to protect the leads against possible interference with the rotor fans. Test each

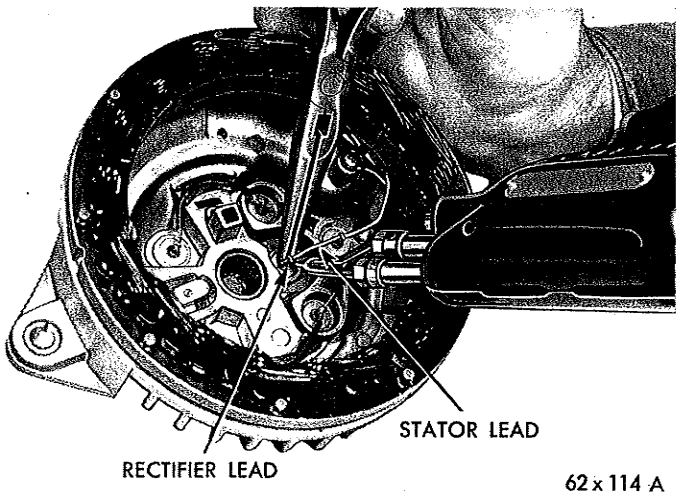


*Fig. 42—Soldering Rectifier and Stator Leads*

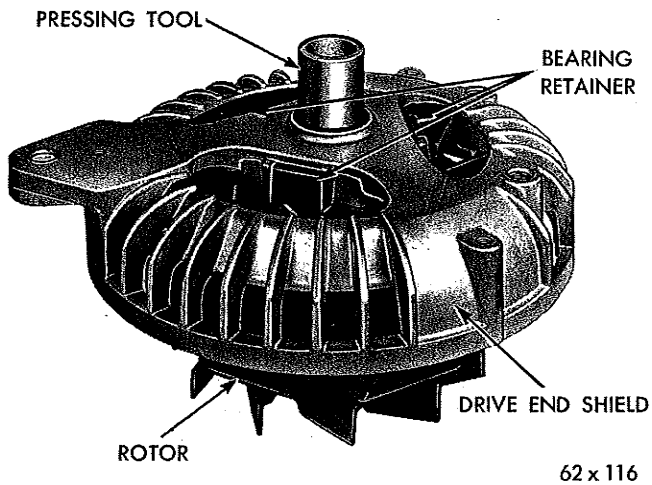


*Fig. 44—Installing Drive End Shield and Bearings*

MyMopar.com

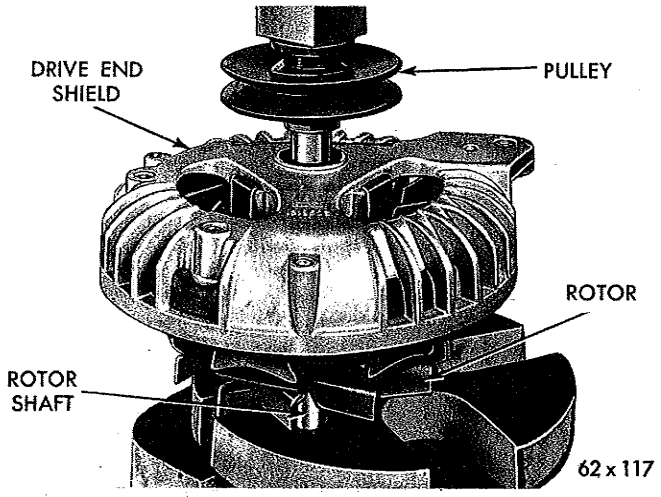


*Fig. 45—Installing Alternator Pulley*

replacement rectifier to make certain rectifier was not damaged by the soldering or pressing operations.

(6) Support end shield on Tool C-3925 so that notches in the support tool will clear the raised section of the heat sink and press the bearing into position with Tool SP-3381 (Fig. 43). **New bearings are pre-lubricated, additional lubrication is not required.**

(7) Insert drive end bearing in drive end shield and install bearing retainer plate to hold bearing in place.

(8) Position bearing and drive end shield on rotor shaft and, while supporting base of rotor shaft, press bearing and shield into position on rotor shaft with arbor press and Tool C-3858 (Fig. 44).

**CAUTION: Make sure bearing is installed squarely at installation; otherwise, damage to bearing will result. Press bearing on rotor shaft until bearing contacts shoulder on rotor shaft.**

(9) Install pulley on rotor shaft. Shaft of rotor must be supported in a manner so all pressing force is on pulley hub and rotor shaft (Fig. 41). **Press pulley on rotor shaft until pulley contacts inner race of drive end bearing. Do not exceed 6800 pounds pressure.**

(10) The alternators have the capacitor mounted internally. Make sure heat sink insulator is in place (Fig. 34).

(11) Install output terminal screw and capacitor through heat sink and end shield.

(12) Install insulating washers, lockwashers and lock nuts.

(13) Make sure heat sink and insulator are in position then tighten lock nut.

(14) Position stator on rectifier end shield.

(15) Position rotor and end shield assembly on stator and rectifier end shield assembly. Align the through bolt holes in the stator, rectifier end shield and drive end shield.

(16) Compress stator and both end shields by hand and install through bolts, washers and nuts.

(17) Install insulated brush in rectifier end shield. Place bronze terminal on plastic holder with tab of terminal in the recess in plastic holder.

(18) Place **nylon washer on** the bronze terminal and install lockwasher and attaching screw.

(19) Install ground brush and attaching screw.

(20) Rotate pulley slowly by hand to be sure rotor fans do not hit the rectifiers, capacitor lead, and stator connections.

(21) Install alternator and adjust drive belt to specifications.

(22) Connect (output) "BAT" and (field) "FLD" leads and connect ground wire.

(23) Connect battery ground cable.

(24) Start and operate engine, and observe alternator operation.

(25) Test current output and adjust regulator voltage setting, if necessary.

# IGNITION SYSTEM–6-CYLINDER

## INDEX


| | Page |
|---|---|
| Assembling the Distributor | 47 |
| Ballast Resistor | 51 |
| Coil - Ignition | 51 |
| Distributor Advance Testing | 50 |
| Distributor Contact Dwell | 44 |
| Distributor Disassembly | 45 |
| Distributor Installation | 50 |
| Distributor Lubrication | 49 |
| Distributor Removal | 45 |
| Distributor Resistance Test | 43 |
| Dwell Variation | 44 |
| General Information | 41 |
| Idle R.P.M. Test | 44 |
| Ignition Coil | 51 |
| Ignition Timing | 44 |
| Installation and Aligning Contacts | 49 |
| Lubrication - Distributor | 49 |
| Secondary Circuit Inspection | 42 |
| Service Diagnosis | 42 |
| Shaft and Bushing Wear Test | 45 |
| Spark Plugs | 61 |
| Specifications | 91 |
| Testing Contact Arm Spring Tension | 48 |
| Timing - Ignition | 44 |


## GENERAL INFORMATION

The ignition system consists of two separate circuits. The battery, ammeter, ignition switch, ballast resistor, primary winding of the ignition coil, distributor contacts and condenser, vehicle frame, and pri-

MyMopar.com

mary wiring make up the low voltage primary circuit. The secondary high voltage circuit includes the coil secondary winding, distributor cap and rotor, spark plug cables, spark plugs and vehicle frame.

## SERVICE DIAGNOSIS

| Condition | Possible Cause | Correction |
|---|---|---|
| **BURNED OR PITTED DISTRIBUTOR CONTACTS** | (a) Dirt or oil on contacts. | (a) If oil is on contact face, determine cause and correct condition. Clean distributor cam of dirt and grease, apply a light film of distributor cam lubricant to cam lobes; wipe off excess. See "Distributor Lubrication." Replace contact set and adjust as necessary. |
| | (b) Alternator voltage regulator setting too high. | (b) Test alternator voltage regulator setting, adjust as necessary. Replace contact set and adjust as necessary. |
| | (c) Contacts misaligned or gap too small. | (c) Align and adjust contacts. |
| | (d) Faulty coil. | (d) Test and replace coil if necessary. Replace and adjust contacts. |
| | (e) Ballast resistor not in circuit. | (e) Inspect conditions, and correctly connect the coil. |
| | (f) Wrong condenser or faulty condenser. | (f) Test condenser and replace if necessary. Replace and adjust contacts. |
| | (g) Faulty ignition switch. | (g) Replace ignition switch. |
| | (h) Bushings or distributor shaft worn. | (h) Recondition distributor. |
| | (i) Touching contacts with the hands during installation. | (i) Replace and adjust contacts. |
| **IGNITION COIL FAILURE** | (a) Coil damaged by excessive heat from engine. | (a) Replace coil. Inspect condition of the distributor contacts. |
| | (b) Coil tower carbon-tracked. | (b) Replace the coil. |
| | (c) Oil leak at tower. | (c) Replace the coil. |
| **CONDENSER FAILURE** | (a) Normal fatigue. | (a) Test and replace condenser. Inspect distributor contacts for pitting. |
| | (b) Damaged by excessive engine heat or moisture. | (b) Test and replace condenser. Inspect distributor contacts for pitting. |

## SERVICE PROCEDURES

### *Secondary Circuit Inspection*

Check the high tension cable connections for good contact at the coil and distributor cap towers and at the spark plugs. The terminals should be fully seated. The nipples and spark plug covers should be in good condition. The nipples should fit tightly on the coil cap towers and the spark plug covers should fit tight around the spark plug insulators. Cable connections that are loose will corrode and increase the resistance and permit water to enter the towers causing ignition malfunction.

**To maintain proper sealing between the towers and the nipples, the cable and nipple assemblies should not be removed from the distributor or coil towers unless the nipples are damaged or cable testing indicates high resistance or broken insulation.**

Clean the high tension cables with a cloth moistened with a non-flammable solvent and wipe dry. Bend cables to check for brittle or cracked insulation.

When testing the secondary cables for punctures and cracks with an oscilloscope follow the instructions of the equipment manufacturers.

If an oscilloscope is not available, the secondary cables can be tested as follows:

(a) Engine not running, connect one end of a test probe to a good ground, other end free for probing.

(b) Disconnect the cable at the spark plug end. Insulate the cable end from grounding.

(c) With engine running, move test probe along entire length of wire. If punctures or cracks are present there will be a noticeable spark jump from the faulty area to the probe. Secondary coil wire may be checked in the same manner, be sure one spark plug cable is disconnected from spark plug while running probe along coil wire secondary cable. Cracked, leaking or faulty cables should be replaced.

**When installing new cable assemblies, install the new high tension cable and nipple assembly over the cap or coil tower, entering the terminal into the tower, push lightly, then pinch the large diameter of the nipple (Fig. 1) to release the trapped air between the nipple and tower. Continue pushing on the cable**

MyMopar.com

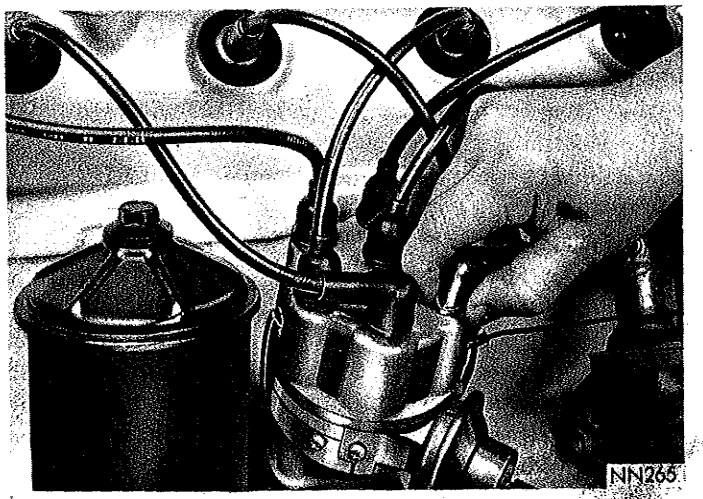


*Fig. 1—Installing Secondary Cable and Nipple at Distributor Cap Tower*

**and nipple until the cables are properly seated in the cap towers. Use the same procedure to install the cable in the coil tower (Fig. 2).**

Use the following procedure when removing the high tension cable from the spark plug. First, remove the cable from the retaining bracket. Then grasp the cable **by hand** as close as possible to the spark plug and use a straight and steady pull (Fig. 3). **Do not use pliers and do not pull the cable at an angle.** Doing so will damage the insulation, the cable terminal or the spark plug insulator. **Wipe the spark plug insulator clean before reinstalling the cable and cover.**

Resistance type cable is identified by the words "Electronic Suppression" printed on the cable jacket. No additional resistors are necessary.

Use an ohmmeter to check resistance type cable for open circuits, loose terminals or high resistance as follows:

(a) Remove the cable from the spark plug and install the proper adapter between the cable and the spark plug.

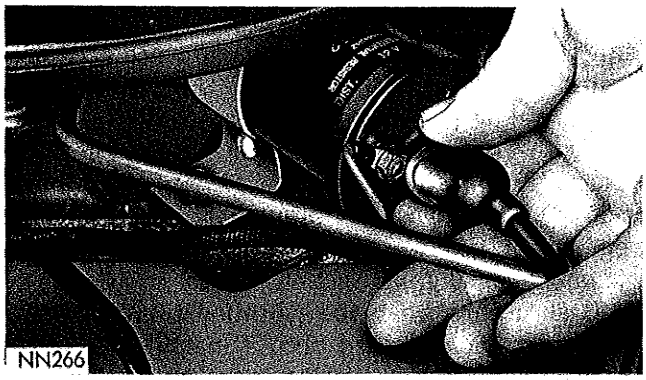


*Fig. 2—Installing Secondary Cable and Nipple at Coil Tower*

(b) Lift the distributor cap from the distributor with cables intact. **Do not remove the cables from the cap.**

(c) Connect the ohmmeter between the spark plug adapter and the corresponding electrode inside the cap, making sure the ohmmeter probes are in good contact. If resistance is more than 30,000 ohms, remove the cable at the cap tower and check the cable resistance. If the resistance is more than 30,000 ohms, replace the cable assembly. Test all spark plug cables in the same manner.

To test the coil to distributor cap high tension cable, remove the distributor cap with the cable intact. **Do not remove the cable from the coil or cap.** Connect the ohmmeter between the center contact in the cap and either primary terminal at the coil. If the combined resistance of coil and cable is more than 25,000 ohms, remove the cable at the tower and check the cable resistance. If the resistance is more than 15,000 ohms, replace the cable. If the resistance is less, check for a loose connection at the tower or for a faulty coil.

Inspect the coil tower for cracks, carbon tracking or oil leaks.

## DISTRIBUTOR RESISTANCE TEST

This test indicates the resistance of the ignition primary circuit from the distributor side of the coil, through the contacts and the distributor ground. Excessive resistance in this portion of the ignition system will prevent the coil from producing sufficient output for good overall ignition. To perform test, proceed as follows:

(1) Turn Selector Switch of a Tach-Dwell unit to the CALIBRATE position and adjust Dwell Calibrator until Dwell Meter reads on the set line (test leads separated).

(2) Leave Selector Switch in CALIBRATE position, connect Tach-Dwell red lead to distributor terminal of coil and black lead to a good ground.

(3) Turn ignition switch "ON." Observe dwell meter reading. Meter pointer should be well within bar marked "DISTRIBUTOR RESISTANCE." If reading is zero or outside of bar, crank engine with the starter until meter pointer moves as far to the right as possible. (This will indicate that contacts are closed.) A reading now within the bar indicates a normal distributor primary circuit.

If reading is outside the bar, high resistance is present in distributor primary circuit.

(4) Remove test lead from distributor terminal of coil and connect to the following points:

(a) Distributor primary terminal (outside)
(b) Distributor primary terminal (inside)
(c) Contact terminal bracket (insulated bracket)
(d) Ground side of contacts.
(e) Distributor housing.

MyMopar.com

(5) Repeat test at each connection until a noticeable change occurs in meter reading. If a poor connection or faulty lead is indicated, clean, tighten or replace as necessary and repeat test (3).

If faulty contacts are indicated, remove distributor complete inspection, service, testing and calibration.

## IDLE RPM TEST

Engine idle rpm setting should be tested and recorded as it is when the vehicle is first brought into the shop for testing. This will assist in diagnosing complaints of engine stalling or complaints of creeping and hard shifting on vehicles equipped with automatic transmissions.

Test procedures are as follows:

(1) Turn Selector Switch to CALIBRATE position and adjust Dwell Calibrator until Dwell Meter reads on SET line (test leads separated).

(2) Connect red lead of the test unit to the distributor primary terminal at the coil and the black lead to a good ground.

(3) Turn the Selector Switch to the 6 LOBE position.

(4) Turn Tach-Dwell RPM Switch to the 1000 RPM position.

(5) With engine at normal operating temperature (off fast idle), momentarily open the throttle and release to make sure there is no bind in the linkage and that idle speed screw is against its stop.

(6) Note engine RPM on 1000 RPM scale and adjust carburetor idle speed to specifications shown in Fuel System "Specifications."

## DISTRIBUTOR CONTACT DWELL

The degrees of distributor dwell are the degrees of rotation through which the breaker contacts remain closed. This is also commonly referred to as "dwell angle" or "cam angle."

Correct distributor contact dwell is essential for good ignition performance and contact life.

Test procedures are as follows:

(1) Connect Tach-Dwell red lead to distributor terminal of coil and black lead to a good ground.

(2) Turn Selector Switch to 6 LOBE position.

(3) Start engine and operate at idle speed.

(4) Observe Dwell-Meter reading. If dwell reading is within "Specifications," contact gap, cam rubbing block and contact arm are all in satisfactory condition.

If dwell reading is not within specifications, incorrect contact gap, worn cam, worn rubbing block or distorted movable contact arm may be indicated.

### *Dwell Variation*

This test indicates the mechanical condition of the distributor. Excessive wear in distributor mechanical parts cause dwell variations which will affect ignition timing.

Test procedures are as follows:

(1) With engine at idle speed, vacuum hose disconnected, and with test leads connected as in Contact Dwell Test, turn the Tach-Dwell RPM Switch to 5000 RPM position.

(2) Slowly increase engine speed to 1500 RPM then slowly reduce to idle speed while observing Dwell Meter reading.

If dwell reading varies more than 2 degrees from initial reading between idle speed and 1500 RPM, probable wear in the distributor shaft, bushings or breaker plate is indicated. Remove distributor for complete inspection and testing on a distributor tester. **Dwell variation at speed above 1500 RPM does not necessarily indicate distributor wear.**

**IMPORTANT: Dwell and gap of the contacts must both be within their specified limits at the same time. If this cannot be accomplished, it is probable that wrong contacts are installed, the rubbing block or cam lobes are badly worn or the movable contact arm is distorted.**

## IGNITION TIMING

To obtain maximium engine performance, the distributor must be correctly positioned on the engine to give proper ignition timing.

The ignition timing test will indicate timing of the spark at No. 1 cylinder at idle (only).

Test procedures are as follows:

(1) Disconnect vacuum hose at distributor.

(2) Connect secondary lead of Power Timing Light to No. 1 spark plug, red primary lead to positive terminal of battery and black primary lead to negative battery terminal. **Do not puncture cables, boots or nipples with test probes. Always use proper adapters. Puncturing spark plug cables with a probe will damage the cables. The probe can separate the conductor and cause high resistance. In addition, breaking the rubber insulation may permit secondary current to arc to ground.**

(3) Start engine and set idle to "Specifications" (Transmission in Neutral).

(4) Loosen distributor hold-down arm screw just enough so the distributor housing can be rotated in its mounting.

(5) Aim Power Timing Light at timing plate on chain case cover. If light flash occurs when timing mark on the vibration damper is located ahead of the specified "BTC" mark on timing plate in the direction of engine rotation, timing is advanced. To adjust, turn distributor housing in direction of rotor rotation.

If flash occurs when the vibration timing mark is located past the specified "BTC" mark in the direction of engine rotation, timing is retarded. To adjust, turn distributor housing against direction of rotor rotation. Refer to "Specifications." (Moving the distribu-

MyMopar.com

tor housing counterclockwise advances ignition timing and clockwise retards timing.)

(6) Tighten distributor hold-down arm screw after timing has been set and recheck timing adjustment with a Power Timing Light.

(7) When ignition timing is correct, reconnect vacuum hose to distributor.

## DISTRIBUTOR REMOVAL

(1) Disconnect vacuum hose at distributor.

(2) Disconnect primary lead wire at coil.

(3) Unfasten distributor cap retaining clips and lift off distributor cap.

(4) Rotate engine crankshaft until the distributor rotor is pointing toward the cylinder block, scribe a mark on block at this point to indicate position of the rotor as reference when reinstalling distributor.

(5) Remove distributor hold-down arm screw.

(6) Carefully lift the distributor from the engine, shaft will rotate slightly as the distributor gear is disengaged from the camshaft gear.

### *Shaft and Bushing West Test*

(1) Remove distributor rotor.

(2) Disconnect primary lead wire at distributor terminal. **Do not loosen** removable contact arm spring retaining nut.

(3) Clamp distributor hold-down arm in a vise equipped with soft jaws and apply only enough pressure to restrict any movement of the distributor during this test.

(4) Attach a dial indicator to distributor housing so indicator plunger arm rests against movable arm at rubbing block and with rubbing block of movable contact arm on highest point of a cam lobe (Fig. 3).

(5) Place one end of a wire loop around the top of distributor shaft. Hook a spring scale in the other end of the wire loop and pull on a line with the plunger of the indicator gauge. The wire loop must be down on the distributor shaft to insure a straight pull also be sure that the wire loop does not interfere with the indicator or indicator holding bracket. Apply a five pound pull and read the movement of the plunger on the indicator dial. (Be sure the rubbing block of the movable contact arm is on the highest point of the cam lobe during this test.) If the plunger movement exceeds .006 inch, replace the bushings and/or distributor shaft, see "Distributor Disassembly."

## DISTRIBUTOR DISASSEMBLY (Fig. 4)

(1) Remove distributor rotor.

(2) Remove the two screws and lockwashers attaching the vacuum control unit to distributor housing and remove vacuum control unit.

(3) Disconnect primary lead at terminal screw and slide primary lead off the breaker plate terminal. Remove wire and grommet as an assembly. (Push grommet towards inside of distributor to remove—**Do not pull the wire.**)

(4) Remove two screws and lockwashers attaching contact plate to the housing and lift out contact plate, contacts and condenser as an assembly. **Distributor cap clamp springs are held in place by peened metal around the openings and should not be removed.**

(5) Remove oil felt wick from distributor cam (Fig. 5). Remove wire clip from oil well in cam (Fig. 6), then remove cam and yoke assembly, and spacer.

If the side play exceeds .006 inch in "Shaft and Bushing Wear Test," replace bushings and/or shaft as follows:

(a) Remove distributor drive gear retaining pin and slide gear off end of shaft. If gear is worn or damaged

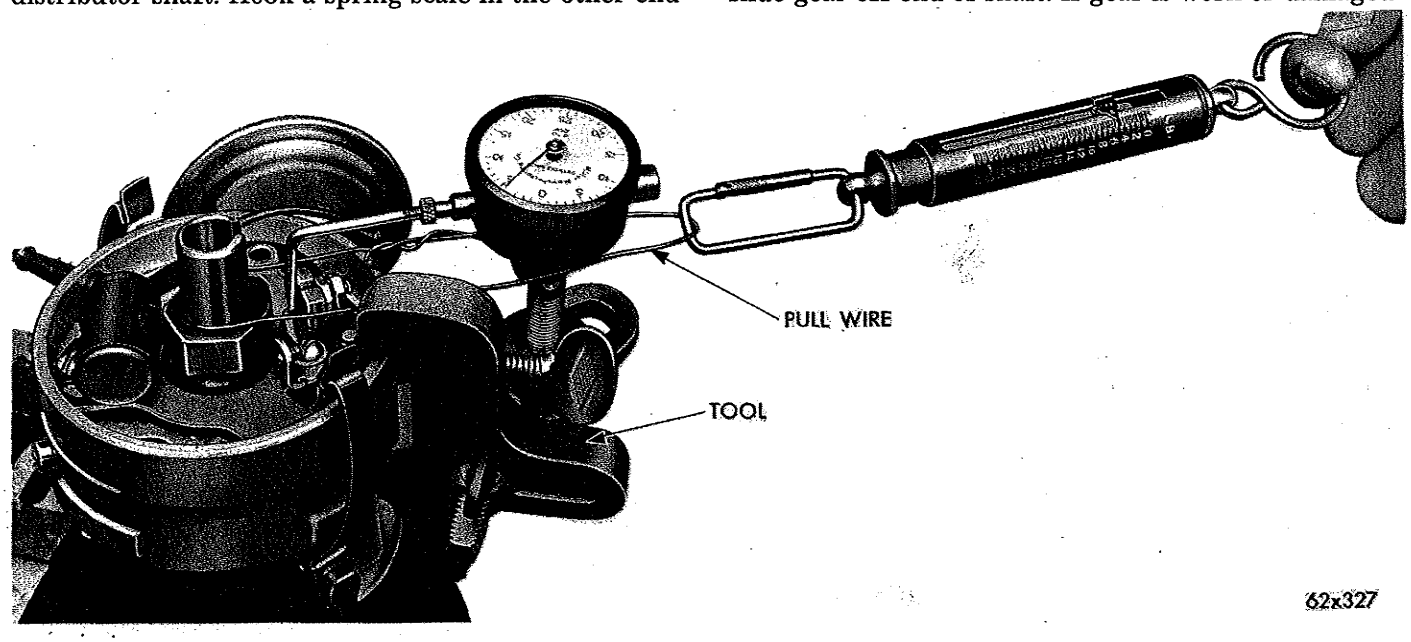


*Fig. 3—Shaft and Bushing Wear Test*

MyMopar.com

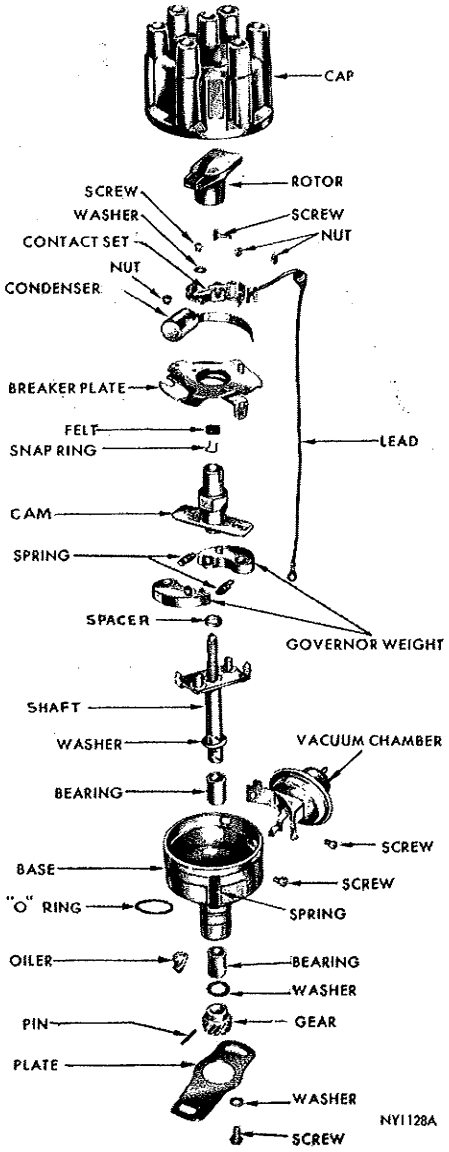


***Fig. 4—Distributor Disassembled View (Typical) — Chrysler Built***

see "Assembling the Distributor" Step (8).

**CAUTION: Support hub of gear in a manner that pin can be driven out of the gear and shaft without damaging gear teeth.**

(b) Use a fine file to clean burrs from around pin hole in the shaft and remove the lower thrust washer.

(c) Push shaft up and remove shaft through top of distributor body. Remove upper thrust washer.

(d) Remove shaft oiler and lift out oiler wick.

**CAUTION: Do not drive bushings out of the housings.**

(e) Remove upper bushing with Tool C-3744 (Fig. 7) by threading the tap securely into the bushing. Place spacer over the tap. Install tool nut and while holding the tool tap, tighten tool nut to remove the bushing. Invert the housing and remove lower bushing in the same manner (Fig 8).

(f) Soak new bushings in light engine oil for approximately 15 minutes before installation.

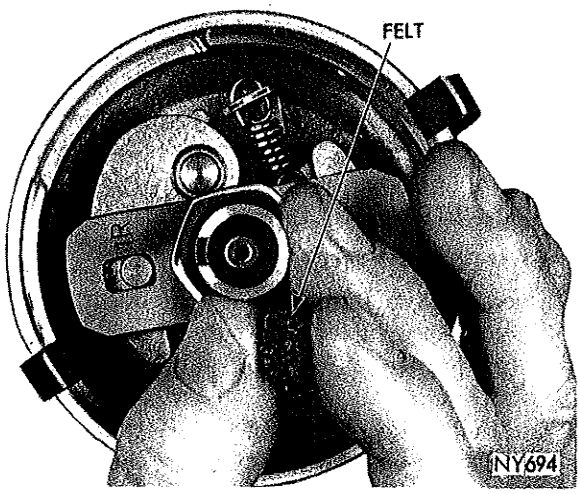


***Fig. 5—Removing or Installing Distributor Cam Felt (Typical)***

(g) Position new upper bushing with hole in bushing up and in line with the oil hole in the housing, then press bushing into housing with Tool C-3041 and adapter (flat face of adapter contacting bushing) (Fig. 9) so that upper end of bushing is **above** the top of housing bore. Upper end of bushing should be 1.613 inch from top of distributor housing measured from bottom face of the straight edge to the top of bushing. Invert housing and install lower bushing flush with face of distributor base (Fig. 10).

(h) Insert a 3/32 inch rod through housing oiler hole to see if hole in bushing indexes with oiler hole in housing. If rod cannot be inserted through housing and bushing, drill a ⅛ inch hole through upper bushing by drilling through the oil wick hole. Remove burrs caused by the drilling operation, and blow the chips out of oil hole.

(i) Install burnishing tool, part of C-3041 Tool Set and press burnisher through both bushings (Fig. 11). The correct bushing inside diameter is .4995 to .5000 inch.

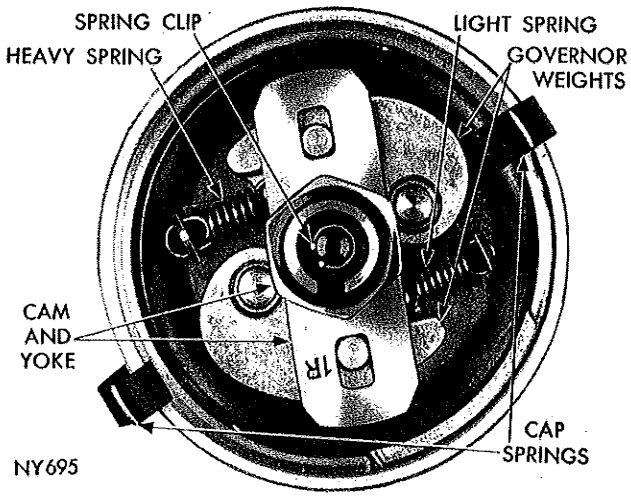


***Fig. 6—Distributor Cam Installed (Typical)***

MyMopar.com

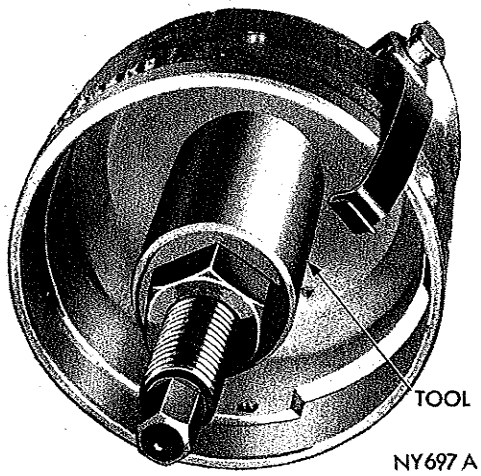


*Fig. 7—Removing Distributor Housing Upper Bushing*

## ASSEMBLING THE DISTRIBUTOR

***(Refer to Fig. 4)***

(1) Test operation of governor weights and inspect weight springs for distortion.

(2) Lubricate governor weights.

(3) Inspect all bearing surfaces and pivot pins for roughness, binding or excessive looseness.

(4) Install cam spacer, (chamfered end down) on distributor shaft.

(5) Slide cam and yoke assembly on distributor shaft and engage weight lugs with slots in yoke (Fig. 12).

(6) Install cam retaining spring clip (Fig. 6).

(7) Lubricate and install upper thrust washer (or washers) on the shaft and slide the shaft into the distributor body.

(8) If gear is worn or damaged, replace as follows:

(a) Install lower thrust washer and old gear on lower end of shaft and temporarily install rollpin.

(b) Scribe a line on the end of shaft from center to edge, so line is centered between two gear teeth as shown in Figure 13. **Do not Scribe completely across the shaft.**

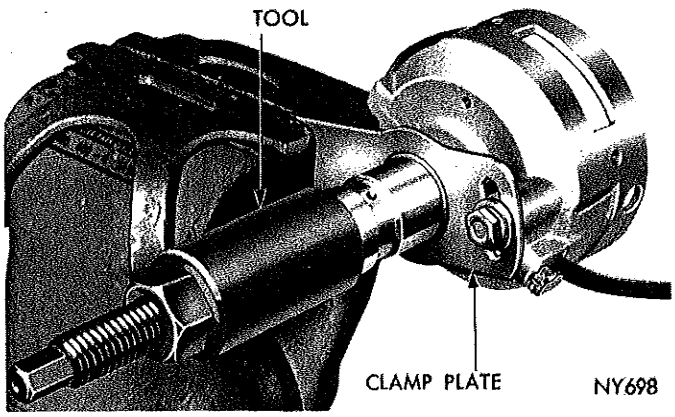


*Fig. 8—Removing Distributor Housing Lower Bushing (Typical)*

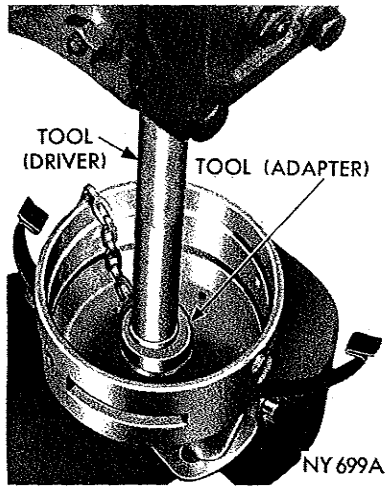


*Fig. 9—Installing Distributor Housing Upper Bushing (Typical)*

(c) Remove rollpin and gear. Use a fine file to clean burrs from around pin hole.

(d) Install new gear with thrust washer in place with hole in gear rotated approximately 90 degrees from old hole in shaft and with scribed line centered between the two gear teeth as shown. **If it appears that the new pin hole may interfere with the shaft oil groove, rotate gear to the centerline of the next pair of gear teeth, aligning again with scribe mark on the end of shaft.**

(e) Before drilling through shaft and gear, place a .007 feeler gauge between gear and thrust washer and after again observing that the centerline between two of the gear teeth is in line with centerline of rotor electrode (Fig. 14) drill a .124-.129 inch hole and install the rollpin.

**CAUTION: Support hub of gear when installing roll pin so that gear teeth will not be damaged.**

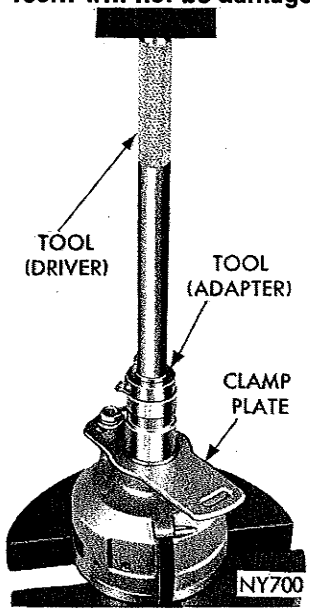


*Fig. 10—Installing Distributor Housing Lower Bushing (Typical)*

MyMopar.com

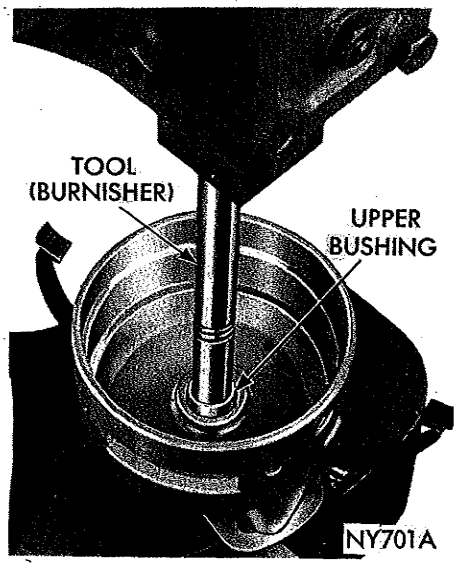


***Fig. 11—Burnishing Distributor Housing Bushings (Typical)***

(9) Install oiler wick and oiler.

(10) Install contact plate assembly, align the condenser lead, movable contact spring, primary lead, and install attaching screws.

(11) Install felt wick in top of distributor cam (Fig. 5).

(12) Attach vacuum advance unit arm to the contact plate.

(13) Install vacuum unit attaching screws and washers.

(14) Test contact arm spring tension.

(15) Adjust contact gap.

(16) Lubricate the felt pad in top of distributor cam with 3 drops of light engine oil and install the rotor.

## TESTING CONTACT ARM SPRING TENSION

(1) Hook a spring scale MTU-36 on contact arm and pull in a straight line at a right angle to the contact surfaces (Fig. 15). Take a reading as contacts start to separate under slow and steady pull of the scale. Spring tension should be 17 to 20 ounces. If reading is outside these limits, loosen the screw which holds the end of contact arm spring, and slide end of spring in or out, as necessary.

(2) Tighten screw and measure spring tension.

**Just the right amount of contact spring tension is very important for effective ignition and efficient engine performance. Spring tension that is too great, will cause excessive wear on distributor cam and on the nylon block of the movable contact arm. Spring tension that is too weak, is unable to keep the con-**

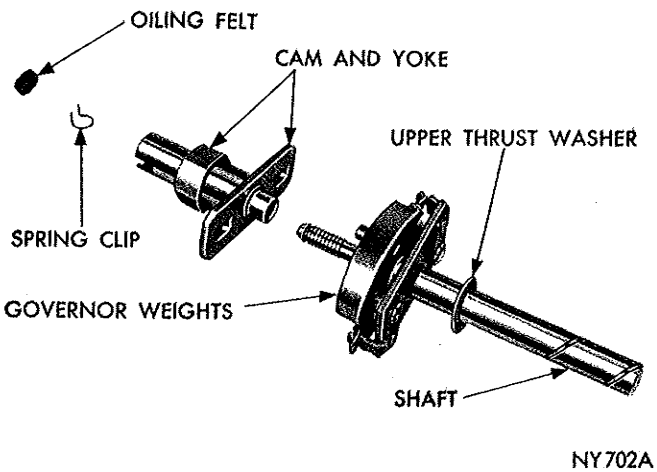


***Fig. 12—Distributor Shaft - Disassembled***

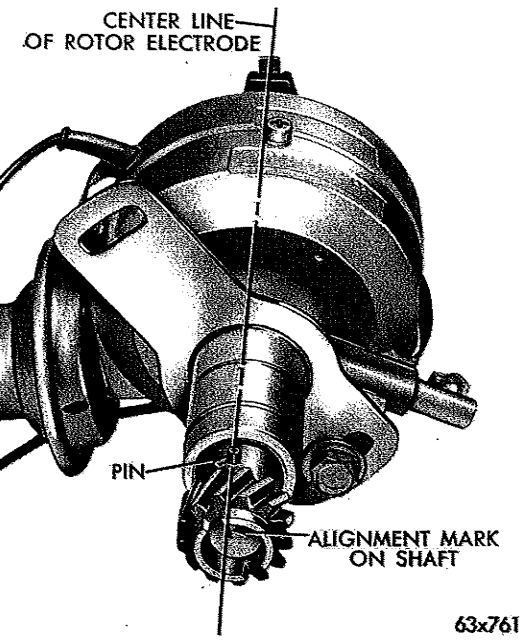


***Fig. 13—Scribe Line on Distributor Shaft***

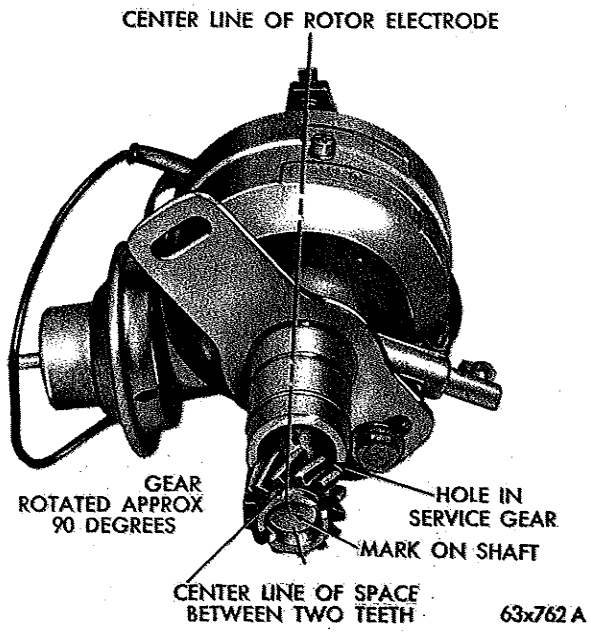


***Fig. 14—Aligning Gear Teeth with Centerline of Rotor Electrode***

MyMopar.com

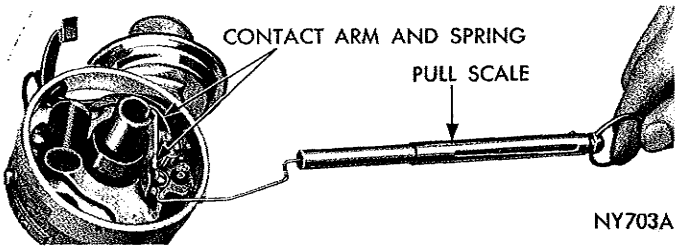


*Fig. 15—Testing Contact Arm Spring Tension (Typical)*

**tacts in contact with each other when they close. This is particularly true as engine speed is increased, causing high-speed misfiring.**

## DISTRIBUTOR CONTACTS

### *Contact Wear*

Contacts which have undergone several thousand miles of operation will have a rough surface, but this should not be interpreted as meaning that contacts are worn out. If the contact area has a gray color and roughness between the contacts matches so that a large contact area is maintained, the contacts will continue to provide satisfactory service.

However, if the contact area is oily, mottled or dark in color, or is badly pitted, the contacts will soon become unsatisfactory for further operation. Not only must they be replaced, but the ignition system and engine must be checked to determine the cause of the trouble so it can be eliminated. **Unless the condition causing the contact burning or excessive pitting is corrected, new contacts will provide no better service than the old contacts.**

### *Burning of Contacts*

Contact burning will result from high primary voltage, presence of oil or other foreign material, defective condenser and improper contacts adjustment. High voltage causes an excessively high current flow through the contacts which burns them rapidly. High voltage can result from an improperly adjusted or inoperative voltage regulator.

Oil or crankcase vapors which work up into the distributor and deposit on the contact surfaces will cause them to burn rapidly. This is easy to detect since the oil produces a smudgy line under the contacts. Clogged engine breather pipes permit crankcase pressure to force oil or vapors up into the distributor. Over-oiling of the distributor will also cause burning.

If contact opening is too small (cam angle too large), arcing will occur between the contacts resulting in low secondary voltage and engine miss.

High series-resistance in the condenser circuit will prevent normal condenser action so the contacts will burn rapidly. This resistance may be caused by a loose condenser mounting or lead connection, or by poor connections inside the condenser.

### *Pitting of Contacts*

Contact pitting results from the transfer of material from one contact to the other so that a tip builds up on one contact while a pit forms in the other.

A small amount of pitting in several thousand miles is normal and does not affect the distributor operation. However, excessive pitting such as long sharp spikes is harmful and causes arcing and voltage loss. Contacts with this condition should be replaced.

Excessive pitting can be due to too small a contact opening, high primary voltage or wrong condenser capacity. Inspect to be certain the condenser capacity is within the specified range of .25 to .285 MFD; contact spring tension should be 17 to 20 ounces and contact gap should be .017 to .023 inch.

## INSTALLING AND ALIGNING CONTACTS

(1) Loosen the terminal screw nut, and remove the primary lead, condenser lead and terminal screw.

(2) Remove the stationary contact lock screw and remove the old contact set.

(3) Install a new contact set; the sleeve at one end of the adjustable bracket fits over and pivots on the upper contact plate mounting pin, the contact insulator also retains the terminal screw head.

(4) Connect the condenser and primary leads.

(5) Align the contacts, if necessary, by bending the stationary contact bracket only. **Never bend** the movable contact arm to obtain alignment.

(6) After aligning the contacts, adjust contact clearance to "Specifications," using dial indicator (Fig. 14). Recheck the contact arm spring tension.

(7) Test the dwell angle to show proper degree of closure. See Paragraph, "Distributor Contact Dwell." The lock screw should be loosened just enough so that the stationary contact bracket can be removed with a slight drag; otherwise, it will be difficult to set the contacts accurately. After setting the contacts to the correct gap, tighten the stationary bracket lock screw.

## DISTRIBUTOR LUBRICATION

(1) Add 3 drops of SAE 10W oil to the oiler on the outside of distributor base.

(2) Lubricate the felt wick under the rotor in top of distributor cam with 3 drops of SAE 10W oil.

(3) Wipe the distributor cam free of dirt and old grease with a clear lintless cloth. Apply a light film of new distributor cam lubricant Number 1473595 or equivalent over the entire cam surface. Lubricant must be able to adhere to the cam surface thereby resisting being thrown from the cam by centrifugal force, must not melt at operating temperatures and must not harden or dry out with age, must not chemically react or be affected by ozone or cause corrosion or pitting of the metal, must possess moisture control properties to prevent rust formation on the cam.

**CAUTION: A thin film is all that is required. Do not**

MyMopar.com

**over-lubricate. Excess grease will be thrown from the distributor cam when engine is running. If this grease strikes the contacts, arcing and burning of contacts will result.**

## DISTRIBUTOR ADVANCE TESTING

### *Centrifugal Advance Curve*

Carefully mount distributor assembly (less cap and rotor) in a reliable stroboscope-type distributor tester so that gear is not damaged and proceed with tests as follows:

(1) Turn the Tach-Dwell switch to the 6 LOBE position and Motor Switch to correct direction of rotation. Refer to "Distributor Advance Specifications" in this manual.

(2) Turn battery switch "ON."

(3) Regulate tester speed control to operate distributor at 100 distributor rpm.

(4) Align the "O" of distributor tester degree ring with any of the arrow flashes.

(5) Adjust tester speed control to operate distributor at speeds called for under "Specifications" and observe arrow flashes opposite tester degree ring to determine degrees of advance.

(6) If advance is not according to specifications, corrections can be made by bending either the light or heavy governor weight spring tabs on cam yoke to increase or decrease spring tension. Adjust light spring tension to obtain the first two positions shown in specifications; adjust heavy spring tension to obtain last two positions. The governor spring tabs can be reached through the access hole at contact plate. Rotate shaft until proper spring and tab line up with the access hole. Insert a screwdriver blade through the access hole and bend spring tab toward distributor cam to decrease spring tension and advance spark, or away from distributor cam to increase spring tension and retard the spark. **The light tension spring controls lower end of advance curve, the heavier spring controls the upper end of advance curve.**

### *Vacuum Diaphragm Leak Test*

With distributor mounted in Distributor Tester and with vacuum unit attached to distributor, proceed as follows:

(1) Place thumb over end of vacuum pump hose and adjust the regulator control knob to give a reading of 20 inches of vacuum with hose closed off to be sure tester hose does not leak.

(2) Attach tester vacuum pump hose to the tube on vacuum unit. Vacuum gauge should hold on maximum vacuum obtainable if no leaks exist.

(3) Observe breaker plate while performing leak test to test response of the breaker plate. There should be instant response to pull of the diaphragm, moving plate without a drag, bind or jerk in either direction.

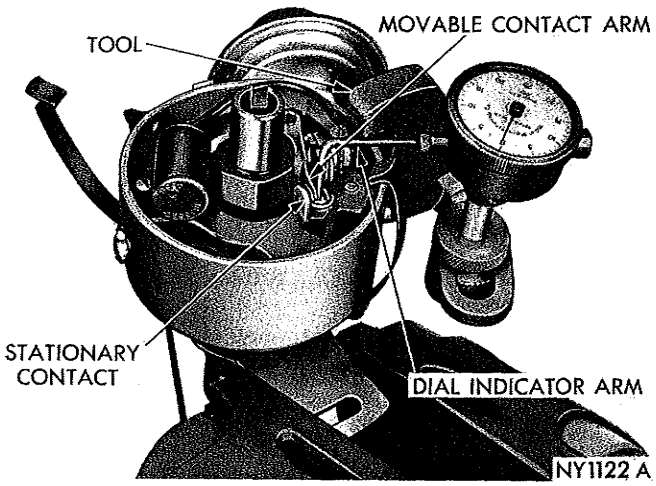


***Fig. 16—Adjusting Contact Clearance with Indicator (Typical)***

(4) If leakage is indicated, replace vacuum unit assembly.

### *Vacuum Advance Curve*

If only the vacuum advance curve is to be checked, connect tester vacuum pump hose to distributor vacuum advance unit and perform operations 1 through 4 under "Centrifugal Advance Curve," then proceed as follows:

(1) Turn tester vacuum pump "ON." Adjust vacuum pump regulator to vacuum test specifications. See "Specifications" and observe arrow flashes on tester degree ring to determine degrees of advance.

(2) If vacuum advance is below or above specifications, replace the vacuum advance unit. Retest vacuum advance curve.

## DISTRIBUTOR INSTALLATION

(1) Position distributor on engine. Make certain the rubber "O" ring seal is in the groove of distributor shank.

(2) Carefully engage distributor drive gear with camshaft drive gear so that when distributor is installed properly, rotor will be in line with previously scribed line on cylinder block. **If engine has been cranked while distributor is removed, it will be necessary to establish proper relationship between the distributor shaft and Number 1 piston position as follows:**

(a) Rotate the crankshaft until number one piston is at top of compression stroke. Mark on inner edge of crankshaft pulley should be in line with the "O" (TDC) mark on timing chain case cover.

(b) Rotate rotor to a position just ahead of the number one distributor cap terminal.

(c) Lower the distributor into the opening, engaging distributor gear with drive gear on camshaft. With distributor fully seated on engine, rotor should be under the cap number 1 tower with distributor

MyMopar.com

contacts just separating.

(3) Install the distributor cap (make sure all high tension wires "snap" firmly in the cap towers).

(4) Install hold-down arm screw and tighten finger tight.

(5) Attach primary lead wire to the coil. **Do not connect distributor vacuum hose at this time.**

(6) Connect secondary lead of Power Timing Light to the Number 1 spark plug (using proper adaptor) and red primary lead to the positive terminal of battery with black primary lead to negative battery terminal. **Do not puncture the cable cap nipples or spark plug covers to make a contact. Use proper adapters.**

(7) Start engine and run engine at idle speed.

(8) Rotate distributor housing so that timing mark on crankshaft damper is aligned with "BTC" mark on chain case cover. Refer to "Specifications" (Moving distributor housing counter-clockwise advances timing and clockwise retards timing).

(9) Tighten distributor hold down arm screw after timing has been set and recheck timing adjustment with a Power Timing Light.

(10) When timing is correct, connect vacuum hose to the distributor.

(11) Remove Power Timing Light from engine.

### *Ignition Timing (with C-744 Test Lamp)*

(1) Connect C-744 test lamp between distributor primary terminal and battery positive post.

(2) Turn engine until number 6 exhaust valve is just closing; continue turning the engine slowly until mark on the crankshaft pulley is at specified degree mark at case cover.

(3) Loosen distributor clamp bolt so distributor housing can be rotated with a slight drag, then turn distributor in the normal rotation until test lamp lights.

(4) Turn distributor against normal distributor rotation until test lamp goes out. **If test lamp lights immediately when connected, turn distributor against normal distributor rotation until light goes out.**

(5) Tighten distributor clamp bolt securely and remove test lamp. If operation is performed properly the engine is timed to specifications. **If engine is turned beyond the timing mark, continue turning engine for two full revolutions of the crankshaft; this will place the distributor rotor in approximately the initial position.**

**CAUTION: DO NOT reverse rotation of crankshaft if you have passed the timing mark as this would affect valve timing and distributor timing.**

## IGNITION COIL

The ignition coil is designed to operate with an external ballast resistor. When testing the coil for output, include resistor in tests. Inspect the coil for external leaks and arcing.

Test coil according to coil tester Manufacturer's instructions. Test coil primary resistance. Test ballast resistor resistance. Test coil secondary resistance. Replace any coil or ballast resistor that does not meet specifications.

Every time an ignition coil is replaced because of a burned tower, carbon tracking, or any evidence of arcing at the tower, the nipple or boot on the coil end of the secondary cable, replace cable. Any arcing at the tower will carbonize the nipple so that placing it on a new coil will invariably cause another coil failure.

If secondary cable shows any signs of damage, cable should be replaced with a new cable with the neoprene nipple since the old cable can cause arcing, and therefore, ruin a new coil.

### *Ballast Resistor*

The ballast resistor is a compensating resistance in the ignition primary circuit. During low speed operation, when primary circuit current flow is high, ballast resistor temperature rises, increasing resistance. This reduces current flow, thereby prolonging ignition contact lift. At high speed operation, when primary current flow is low, the ballast resistance cools off allowing more current flow, which is required for high speed operation. During starter operation, the ballast resistor is bypassed, allowing full battery voltage to ignition primary circuit.

# IGNITION SYSTEM—8 CYLINDER

## INDEX


| | Page | | Page |
|---|---|---|---|
| Assembling the Distributor | 58 | General Information | 52 |
| Ballast Resistor | 61 | Idle R.P.M. Test | 53 |
| Contact Arm Spring Tension Testing | 58 | Ignition Coil | 61 |
| Distributor Contact Dwell | 53 | Ignition Timing | 54 |
| Distributor Contacts | 59 | Installation and Aligning Contacts | 59 |
| Distributor Disassembly | 55 | Lubrication | 60 |
| Distributor Lubrication | 60 | Secondary Circuit Inspection | 52 |
| Distributor Installation | 61 | Service Diagnosis | 42 |
| Distributor Removal | 54 | Shaft and Bushing Wear Test | 54 |
| Distributor Resistance Test | 53 | Spark Plugs | 61 |
| Dual Contacts | 54 | Testing Distributor Advance | 60 |
| Dwell Variation | 54 | | |


MyMopar.com

## GENERAL INFORMATION

The ignition system consists of two separate circuits. The battery, ammeter, ignition switch, ballast resistor, primary winding of the ignition coil, distributor contacts and condenser, vehicle frame, and primary wiring make up the low voltage primary circuit. The secondary high voltage circuit includes the coil secondary winding, distributor cap and rotor, spark plug cables, spark plugs and vehicle frame.

## SERVICE PROCEDURES

### *Secondary Circuit Inspection*

Check the high tension cable connections for good contact at the coil and distributor cap towers and at the spark plugs. The terminals should be fully seated. The nipples and spark plug covers should be in good condition. The nipples should fit tightly on the coil cap towers and the spark plug covers should fit tight around the spark plug insulators. Cable connections that are loose will corrode and increase the resistance and permit water to enter the towers causing ignition malfunction.

**To maintain proper sealing between the towers and the nipples, the cable and nipple assemblies should not be removed from the distributor or coil towers unless the nipples are damaged or cable testing indicates high resistance or broken insulation.**

Clean the high tension cables with a cloth moistened with a non-flammable solvent and wipe dry. Bend cables to check for brittle or cracked insulation.

When testing the secondary cables for punctures and cracks with an oscilloscope follow the instructions of the equipment manufactures.

If an oscilloscope is not available, the secondary cables can be tested as follows:

(a) Engine not running, connect one end of a test probe to a good ground, other end free for probing.

(b) Disconnect the cable at the spark plug end. Insulate the cable end from grounding.

(c) With engine running, move test probe along entire length of wire. If punctures or cracks are present there will be a noticeable spark jump from the faulty area to the proble. Secondary coil wire may be checked in the same manner, be sure one spark plug cable is disconnected from spark plug while running probe along coil wire secondary cable. Cracked, leaking or faulty cables should be replaced.

**When installing new cable assemblies, install the new high tension cable and nipple assembly over the cap or coil tower, entering the terminal into the tower, push lightly, then pinch the large diameter of the nipple (Fig.1) to release the trapped air between the nipple and tower. Continue pushing on the cable and nipple until the cables are properly seated in the cap towers. Use the same procedure to install the cable in the coil tower (Fig. 2).**

Use the following procedure when removing the high tension cable from the spark plug. First, remove the cable from the retaining bracket. Then grasp the cable **by hand** as close as possible to the spark plug and use a straight and steady pull (Fig. 3). **Do not use pliers and do not pull the cable at an angle.** Doing so will damage the insulation, the cable terminal or the spark plug insulator. **Wipe the spark plug insulator clean before reinstalling the cable and cover.**

Resistance type cable is identified by the words "Electronic Suppression" printed on the cable jacket. No additional resistors are necessary.

Use an ohmmeter to check resistance type cable for open circuits, loose terminals or high resistance as follows:

(a) Remove the cable from the spark plug and install the proper adapter between the cable and the spark plug.

(b) Lift the distributor cap from the distributor with cables intact. **Do not remove the cables from the cap.**

(c) Connect the ohmmeter between the spark plug adapter and the corresponding electrode inside the cap, making sure the ohmmeter probes are in good contact. If resistance is more than 30,000 ohms, remove the cable at the cap tower and check the cable resistance. If the resistance is more than 30,000 ohms, replace the cable assembly. Test all spark plug cables in the same manner.

To test the coil to distributor cap high tension

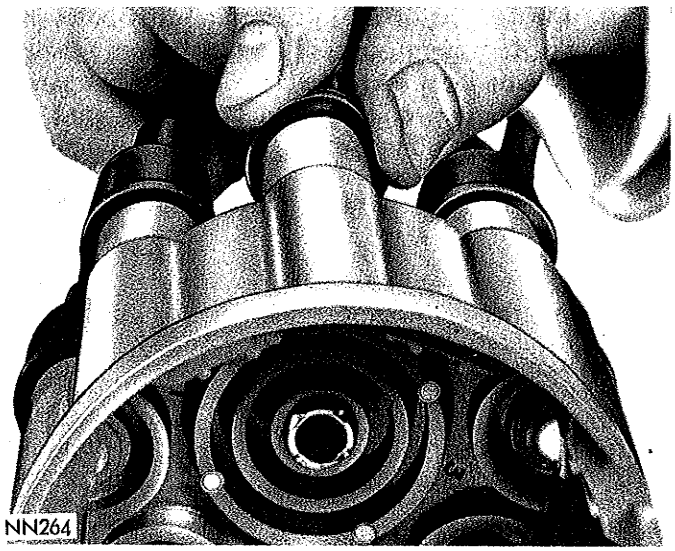


***Fig. 1—Installing Secondary Cable and Nipple at Distributor Cap Tower***

MyMopar.com

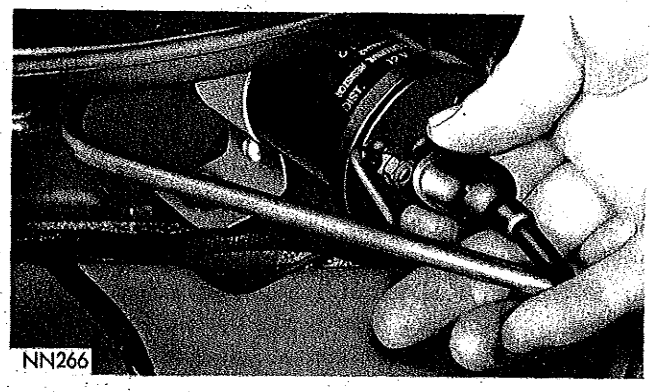


*Fig. 2—Installing Secondary Cable and Nipple at Coil Tower*

cable, remove the distributor cap with the cable in tact. **Do not remove the cable from the coil or cap.** Connect the ohmmeter between the center contact in the cap and either primary terminal at the coil. If the combined resistance of coil and cable is more than 25,000 ohms, remove the cable at the tower and check the cable resistance. If the resistance is more than 15,000 ohms, replace the cable. If the resistance is less, check for a loose connection at the tower or for a faulty coil.

Inspect the coil tower for cracks, carbon tracking or oil leaks.

## DISTRIBUTOR RESISTANCE TEST

This test indicates the resistance of the ignition primary circuit from the distributor side of the coil, through the points and the distributor ground. Excessive resistance in this portion of the ignition system will prevent the coil from producing sufficient output for good over-all ignition. To perform test, proceed as follows:

(1) Turn Selector Switch of a Tach-Dwell unit to CALIBRATE position and adjust Dwell Calibrator until Dwell Meter reads on the set line (test leads separated).

(2) Leave Selector Switch in CALIBRATE position, connect Tach-Dwell red lead to distributor terminal of coil and black lead to a good ground.

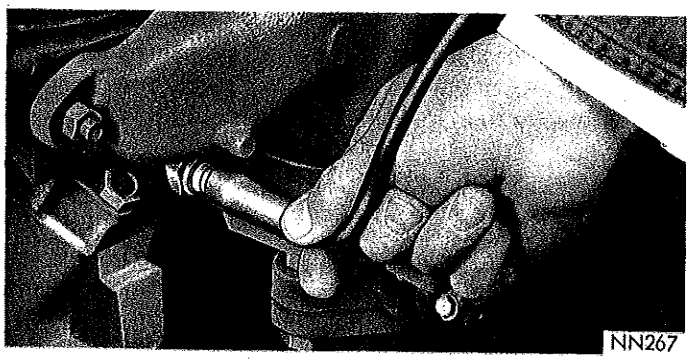


*Fig. 3—Removing Spark Plug Cable from Spark Plug*

(3) Turn ignition switch "ON." Observe dwell meter reading. Meter pointer should be well within bar marked "DISTRIBUTOR RESISTANCE." If reading is zero or outside of bar, crank engine with the starter until meter pointer moves as far to right as possible. (This will indicate that contacts are closed.) A reading now within the bar indicates a normal distributor primary circuit.

If reading is outside the bar, high resistance is present in distributor primary circuit.

(4) Remove test lead from distributor terminal of coil and connect to the following points:

(a) Distributor primary terminal (outside).
(b) Distributor primary terminal (inside).
(c) Contact terminal bracket (insulated bracket).
(d) Ground side of the contacts.
(e) Distributor housing.

(5) Repeat test at each connection until a noticeable change occurs in the meter reading. If a poor connection or faulty lead is indicated, clean, tighten or replace as necessary and repeat test (3).

If faulty contacts are indicated remove distributor for complete inspection, service, testing and calibration.

## IDLE RPM TEST

Engine idle rpm setting should be tested and recorded as it is when the vehicle is first brought into the shop for testing. This will assist in diagnosing complaints of engine stalling, creeping and hard shifting on vehicles equipped with automatic transmissions.

Test procedures are as follows:

(1) Turn Selector Switch to CALIBRATE position and adjust Dwell Calibrator until Dwell Meter reads on SET line (test leads separated).

(2) Connect red lead of the test unit to distributor primary terminal at coil and black lead to a good ground.

(3) Turn Selector Switch to 8 LOBE position.

(4) Turn the Tach-Dwell RPM Switch to the 1000 rpm position.

(5) With engine at normal operating temperature (off fast idle), momentarily open the throttle and release to make sure there is no bind in the linkage and that idle speed screw is against its stop.

(6) Note engine RPM on 1000 RPM scale and adjust carburetor idle speed to specifications. See "Fuel System" specifications.

## DISTRIBUTOR CONTACT DWELL

The degrees of distributor dwell are the degrees of rotation through which the contacts remain closed. This is also commonly referred to as "dwell angle" or "cam angle."

The correct distributor point dwell is essential for good ignition performance and contact point life.

MyMopar.com

Test procedures are as follows:

(1) Connect Tach-Dwell red lead to distributor terminal of coil and black lead to a good ground.

(2) Turn Selector Switch to 8 LOBE position.

(3) Start engine and operate engine at idle speed.

(4) Observe dwell meter reading. If the dwell reading is within "Specifications" the contact gap, cam rubbing block and contact arm are all in satisfactory condition.

If dwell reading is not within specifications, incorrect contact gap, worn cam, worn rubbing block or distorted contact arm may be indicated.

## DUAL CONTACTS

Block one set of contacts with a clean insulator and adjust the opposite set of contacts to specifications using the dwell meter. **Loosen stationary contact lock screw just enough, so stationary contact can be moved with a slight drag; otherwise it will be difficult to set contacts accurately.**

When one set of contacts has been adjusted for correct clearance tighten stationary contact lock screw.

Block adjusted set of contacts with an insulator and adjust remaining set of contacts in the same manner as the first set. Remove insulator and recheck tightness of stationary contact lock screw.

If contacts have been properly adjusted the dwell should be as specified for two contact sets.

## DWELL VARIATION

This test indicates the mechanical condition of the distributor. Excessive wear in distributor mechanical parts cause dwell variations which will affect ignition timing.

Test procedures are as follows:

(1) With engine at idle speed, vacuum hose disconnected, and test leads connected as in "Contact Dwell Test," turn Tach-Dwell RPM Switch to the 5,000 RPM position.

(2) Slowly increase engine speed to 1500 RPM then slowly reduce to idle speed while observing dwell meter reading.

If dwell reading varies more than 2 degrees from initial reading between idle speed and 1500 RPM, probable wear in the distributor shaft, bushings or contact plate bearing and pivot pin is indicated. Remove distributor for complete inspection and testing on a distributor tester. **Dwell variation at speeds above 1500 does not necessarily indicate distributor wear. Dwell and gap of the contacts must both be within their specified limits at the same time. If this cannot be accomplished, it is probable that wrong contacts are installed or the rubbing block or cam lobes are badly worn or movable contact is distorted.**

## IGNITION TIMING

To obtain maximum engine performance, the distributor must be correctly positioned on the engine to give proper ignition timing.

The ignition timing test will indicate the timing of the spark at No. 1 cylinder at idle (only).

Test procedure are as follows:

(1) Disconnect vacuum hose at distributor.

(2) Connect secondary lead of Power Timing Light to No. 1 spark plug, red primary lead to positive terminal of battery and black primary lead to negative battery terminal. **Do not puncture cables, boots or nipples with test probes. Always use proper adapters. Puncturing the spark plug cables with a probe will damage the cables. The probe can separate the conductor and cause high resistance. In addition breaking the rubber insulation may permit secondary current to arc to ground.**

(3) Start engine and set idle to "Specifications" (Transmission in Neutral).

(4) Loosen distributor hold-down arm screw just enough so distributor housing can be rotated in its mounting.

(5) Aim Power Timing Light at timing plate on chain case cover. If light flash occurs when timing mark on vibration damper is located ahead of specified "BTC" mark on timing plate in the direction of engine rotation, timing is advanced. To adjust, turn distributor housing in direction of rotor rotation.

If flash occurs when the vibration timing mark is located past the specified "BTC" mark in the direction of engine rotation, timing is retarded. To adjust, turn distributor housing against direction of rotor rotation. Refer to "Specification." (Moving the distributor housing counterclockwise advances ignition timing and clockwise retards timing).

(6) Tighten distributor hold-down arm screw after timing has been set and recheck timing adjustment with a Power Timing Light.

(7) When ignition timing is correct, reconnect vacuum hose to distributor.

## DISTRIBUTOR REMOVAL

(1) Disconnect vacuum hose at distributor.

(2) Disconnect primary lead wire at coil.

(3) Unfasten distributor cap retaining clips and lift off distributor cap.

(4) Scribe a mark on the edge of distributor housing to indicate position of the rotor as reference when reinstalling distributor.

(5) Remove distributor hold-down clamp screw and clamp.

(6) Carefully lift distributor from engine.

### *Shaft and Bushing Wear Test*

(1) Remove distributor rotor.

(2) Disconnect primary lead wire at distributor terminal. DO NOT LOOSEN inner nut that holds movable contact arm tension spring to terminal post.

(3) Clamp the ribbed section of distributor housing

MyMopar.com

lightly in a vise equipped with soft jaws and attach dial indicator to body of distributor with the indicator plunger arm resting against movable contact arm at the rubbing block and with the rubbing block of contact arm on the highest point of cam lobe (Fig. 4).

(4) Place one end of a wire loop around the top of distributor shaft. Hook a spring scale in the other end of wire loop and pull on a line with the plunger of indicator gauge. Be sure wire loop on shaft end is down on the shaft to insure a straight pull and also that wire loop does not interfere with indicator or holding bracket. Apply a five pound pull and read the movement of plunger on indicator dial. (Be sure rubbing block of contact arm is on highest point of the cam lobe during this test.) If plunger movement exceeds .006 inch, replace bushings and/or distributor shaft, see "Distributor Disassembly."

## DISTRIBUTOR DISASSEMBLY (Figs. 5 and 6)

(1) Remove distributor rotor.

**The distributor cap clamp springs on Chrysler built distributors are held in place by peened metal around the openings and should not be removed.**

(2) Remove the retainer attaching vacuum advance unit to the contact plate advance arm.

(3) Remove the two screws and lockwashers attaching vacuum advance unit to distributor housing and remove the unit.

(4) Remove primary lead wire and rubber grommet as an assembly. Push grommet towards inside of distributor to remove. **Do not pull on the wire.**

(5) Remove two screws, and lockwashers attaching the contact plate to housing and lift out the contact plate, contacts and condenser as an assembly.

(6) Remove oil wick from the distributor cam (Fig. 7). Remove spring clip from oil well in cam and remove cam and yoke assembly and spacer.

(7) If side play exceeded .006 inch in "Shaft and Bushing Wear Test," replace bushing and/or distributor shaft as follows:

(a) Remove distributor drive collar retaining pin and slide collar off end of shaft.

(b) Use a fine file to clean burrs from around pin hole in the shaft and remove lower thrust washer.

(c) Push shaft up and remove it through the top of distributor body. Remove upper thrust washer.

(d) Remove shaft oiler and lift out oiler wick.

**CAUTION: Do not drive bushings out of the housing.**

(e) Remove upper bushing with Tool C-3744 (Fig. 8) by threading the tap securely into the bushing. Place spacer over the tap. Install tool nut and, while holding the tap, tighten tool nut to remove bushing. Invert housing and remove lower bushing in same manner.

On Prestolite built distributors, place housing in an arbor press and press out upper and lower bushings from bottom of housing using Driver Tool C-3041.

(f) Soak new bushings in light engine oil for approximately 15 minutes.

(g) Position new upper bushing with hole in bushing **up** and in line with oil hole in housing, then press bushing into distributor housing with Tool C-3041 and tool adapter with flat face of adapter contacting the bushing (Fig. 9), press the bushing into distributor until top of bushing is 1.613 inches from top machined face of distributor housing. Place a straight-edge on machined surface of housing and measure from bottom face of straight-edge to the top of the bushing. Invert housing and install other bushing

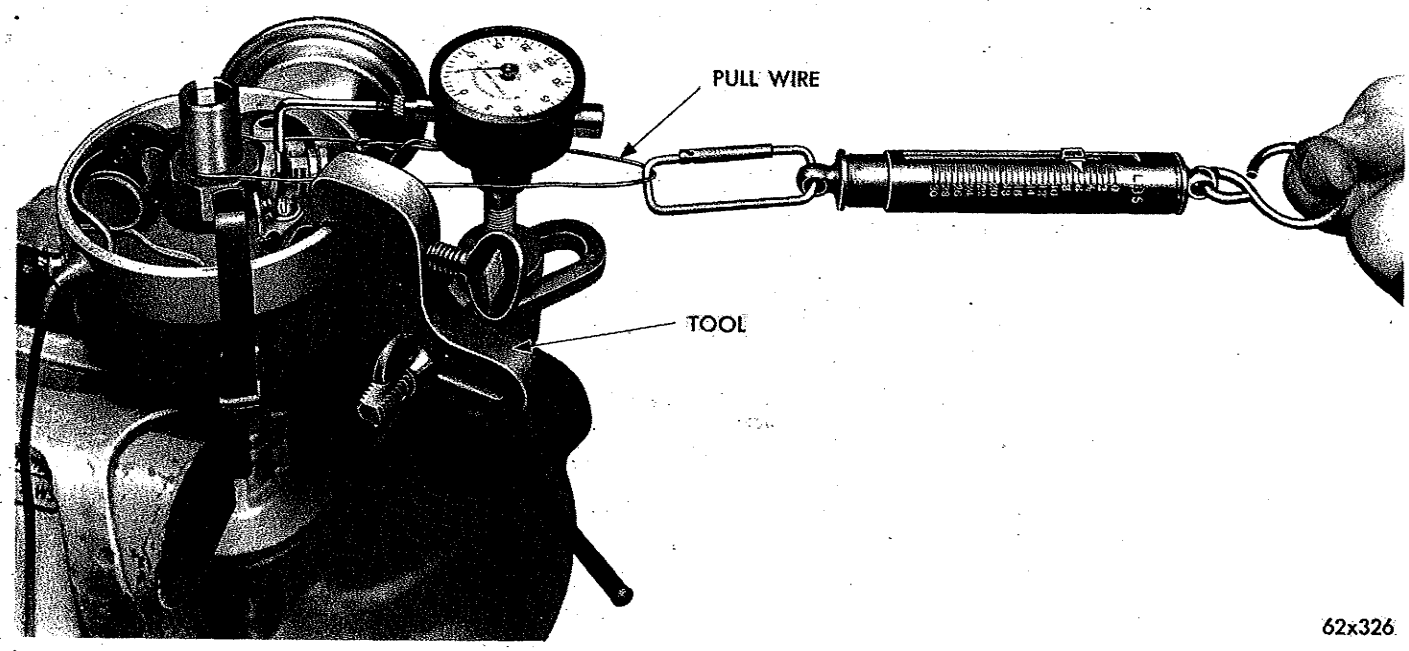


*Fig. 4—Shaft and Bushing Wear Test*

MyMopar.com

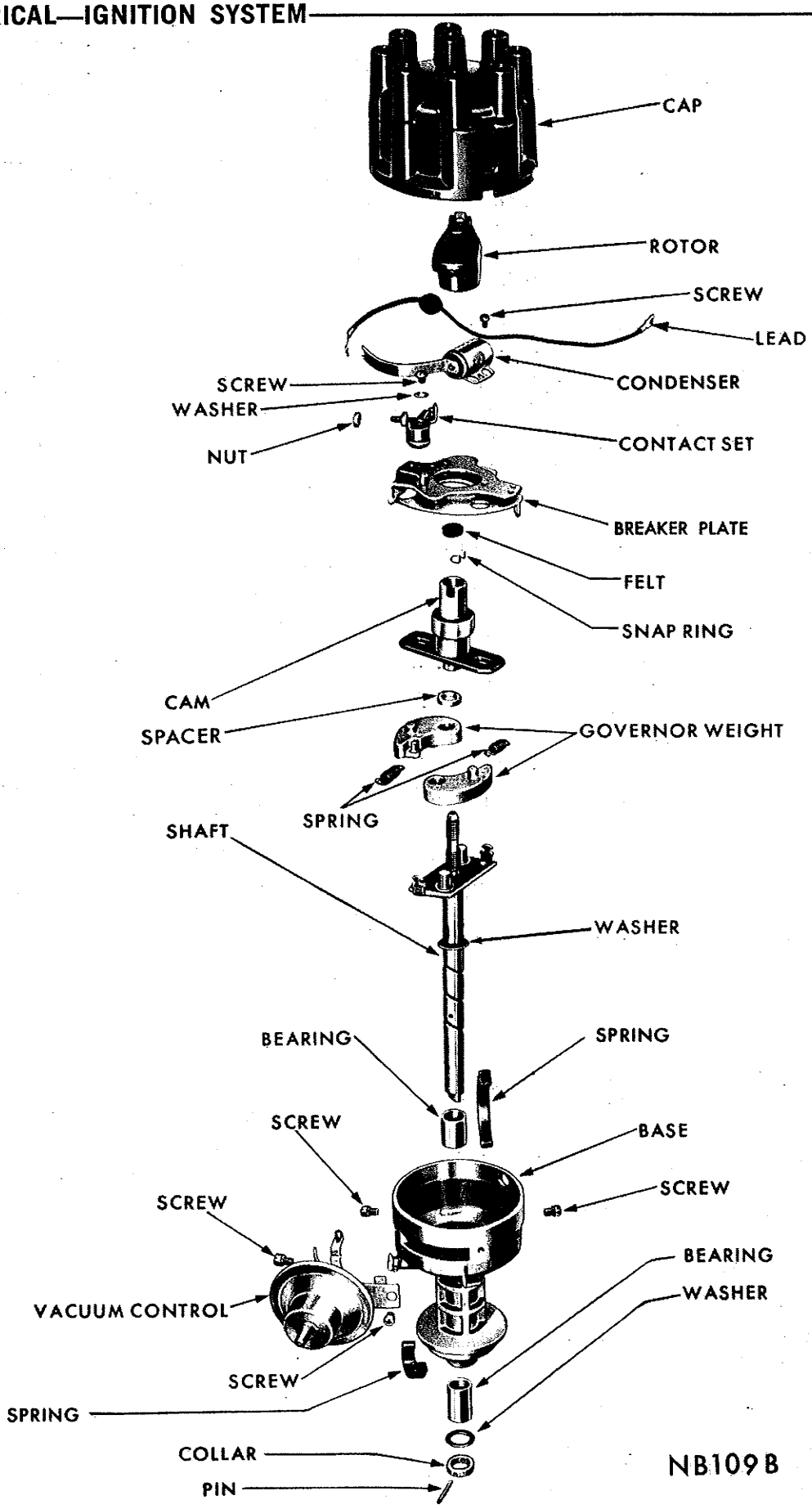


*Fig. 5—Distributor—Disassembled View*

MyMopar.com

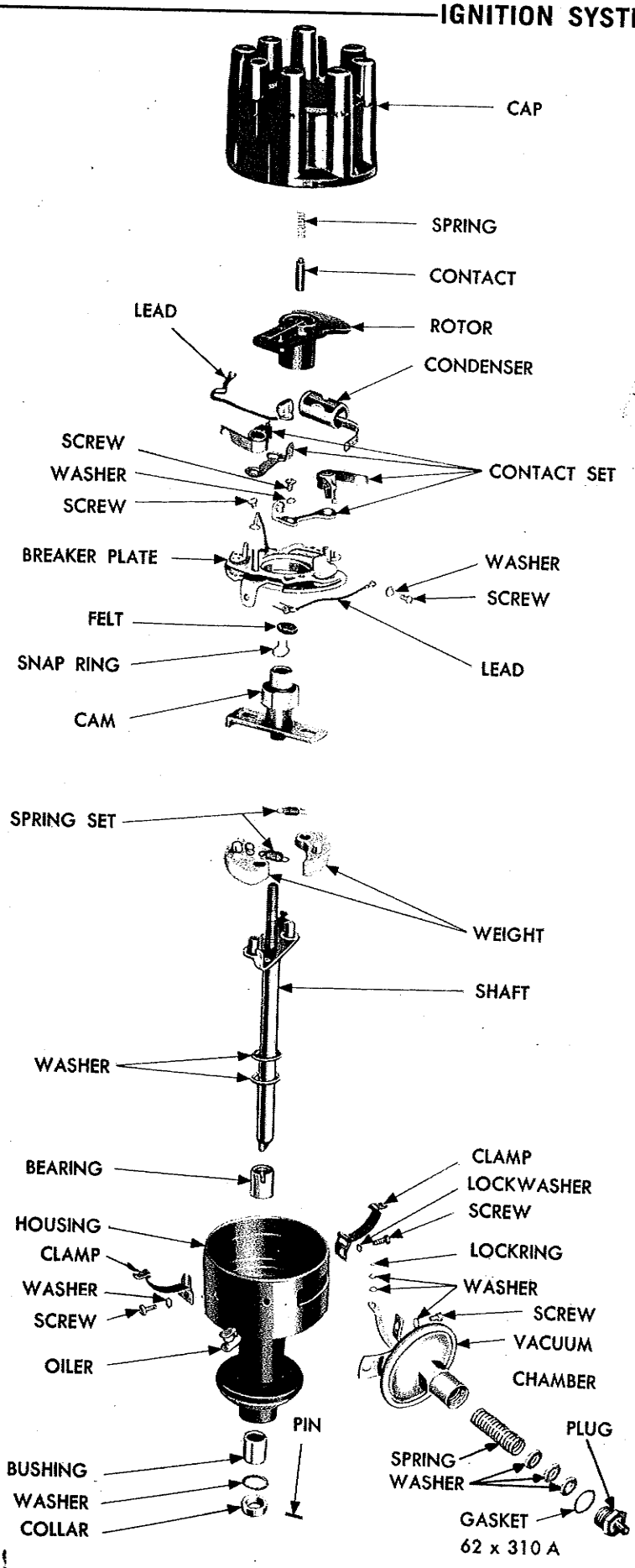


***Fig. 6—Distributor—Disassembled View (Prestolite)***

MyMopar.com

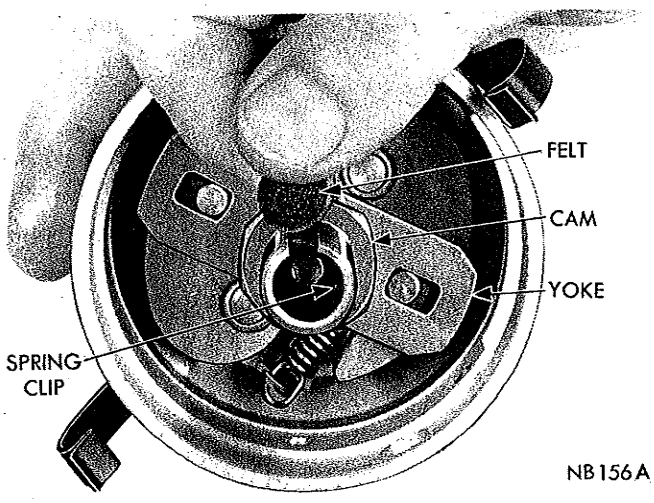


*Fig. 7—Removing or Installing Cam Felt Wick*

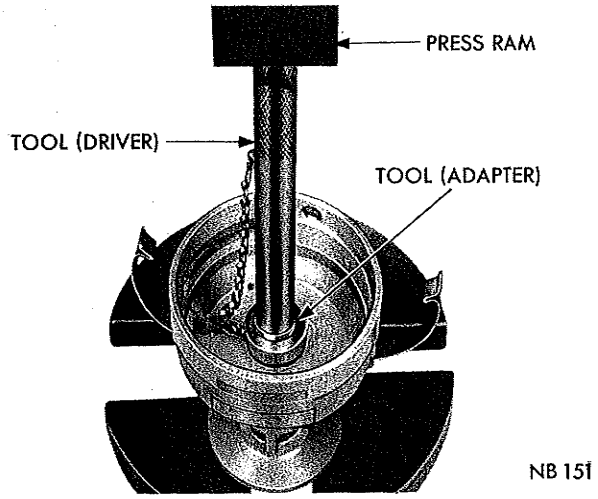


*Fig. 9—Installing Distributor Housing Upper Bushing*

(Fig. 10) flush with the face of distributor base.

(h) Insert a 3/32 inch rod through housing oiler hole to see if the hole in bushing indexes with oiler hole in the housing. If rod cannot be inserted through the housing and bushing, drill a ⅛" hole through the upper bushing by drilling through the oil wick hole. Remove burrs caused by drilling operation.

(i) Install burnishing tool part of C-3041 tool set and force the burnisher through both bushings (Fig. 11). Correct bushing inside diameter is .4995 to .5000 inch.

## ASSEMBLING THE DISTRIBUTOR

(1) Test operation of governor weights and inspect weight springs for distortion. Lubricate governor weights.

(2) Inspect all bearing surfaces and pivot pins for roughness, binding or excessive looseness.

(3) Install cam spacer, chamfered end down on distributor shaft.

(4) Slide cam and yoke on distributor shaft, engage weight lugs with slots in the yoke. Install cam retaining spring clip. Be sure it is properly seated in the groove of distributor shaft.

(5) Lubricate and install flat thrust washer. Position washer on distributor shaft and slide shaft into distributor body. Position lower thrust washer and drive the collar on the lower end of shaft. Install retainer pin.

(6) Install oiler wick and oiler.

(7) Install contact plate assembly. Align condenser lead, contact point spring, primary lead and install attaching screw.

(8) Install felt wick in the top of distributor cam.

(9) Attach vacuum advance unit arm to contact plate and install the retainer (Prestolite only). Install vacuum unit attaching screws and washers.

(10) Test contact arm spring tension, and adjust contact gap.

(11) Lubricate felt pad in the top of distributor cam with 3 drops of light engine oil and install rotor.

## TESTING CONTACT ARM SPRING TENSION

(1) Hook a spring scale Tool MTU-36 on the

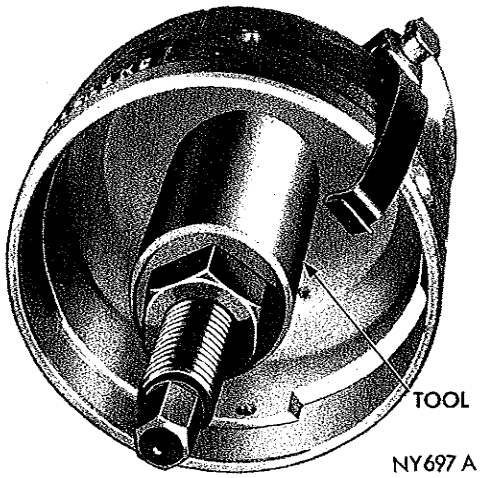


*Fig. 8—Removing Distributor Housing Upper Bushing*

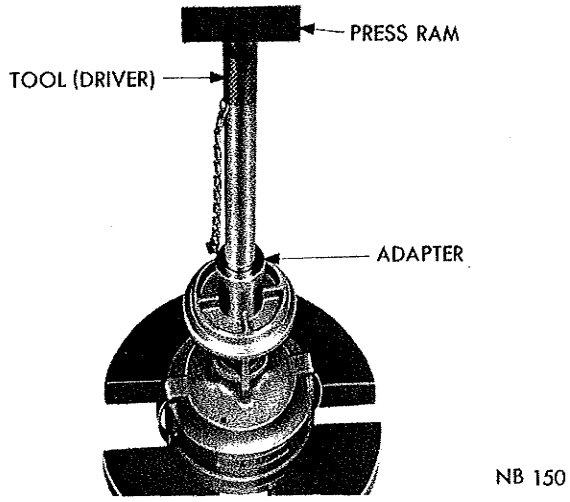


*Fig. 10—Installing Distributor Housing Lower Bushing*

MyMopar.com

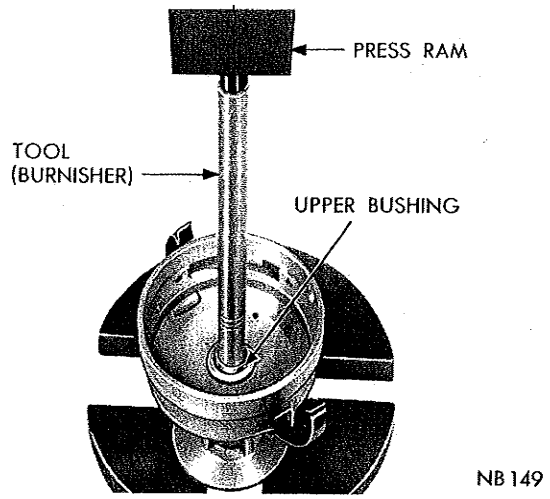


*Fig. 11—Burnishing Distributor Housing Bushings*

breaker arm and pull in a straight line at a right angle to the contact surfaces (Fig. 12). Take a reading as the contacts start to separate under the slow and steady pull of the scale. Spring tension should be 17 to 20 ounces. If the reading is outside these limits, loosen the screw which holds the end of the contact arm spring, and slide the end of the spring in or out, as necessary.

(2) Tighten the screw and measure the spring tension. **Just the right amount of contact spring tension is very important for effective ignition and efficient engine performance. Spring tension that is too great, will cause excessive wear on the distributor cam and on the nylon block of the movable contact arm. Spring tension that is too weak, is unable to keep the contacts in contact with each other when they close. This is particularly true as engine speed is increased, causing high-speed misfiring.**

## DISTRIBUTOR CONTACTS

### *Contact Wear*

Contacts which have undergone several thousand miles of operation will have a rough surface, but this should not be interpreted as meaning that the contacts are worn out. If the contact area has a gray color and the roughness between the contacts matches so that a large contact area is maintained, the contacts will continue to provide satisfactory service.

However, if the contact area is oily, mottled or dark in color, or is badly pitted, the contacts will soon become unsatisfactory for further operation. Not only must they be replaced, but the ignition system and engine must be checked to determine the cause of the trouble so it can be eliminated. **Unless the condition causing the contact burning or excessive pitting is corrected, the new contacts will provide no better service than the old contacts.**

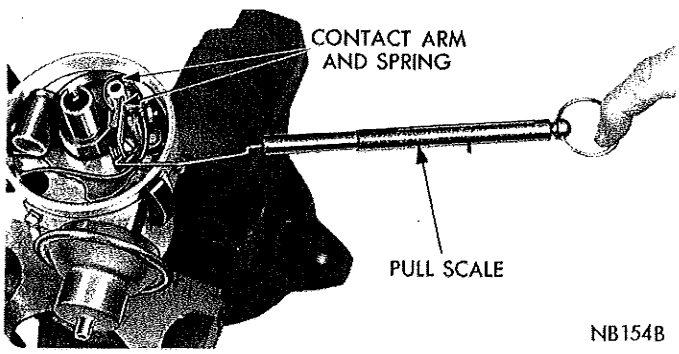


*Fig. 12—Testing Contact Arm Spring Tension*

### *Burning of Contacts*

Contact burning will result from high primary voltage, presence of oil or other foreign material, defective condenser and improper contacts adjustment. High voltage causes an excessively high current flow through the contacts which burns them rapidly. High voltage can result from an improperly adjusted or inoperative voltage regulator.

Oil or crankcase vapors which work up into the distributor and deposit on the contact surfaces will cause them to burn rapidly. This is easy to detect since the oil produces a smudgy line under the contacts. Clogged engine breather pipes permit crankcase pressure to force oil or vapors up into the distributor. Over-oiling of the distributor will also cause burning.

If the contact opening is too small (cam angle too large), arcing will occur between the contacts resulting in low secondary voltage and engine miss.

High series-resistance in the condenser circuit will prevent normal condenser action so the contacts will burn rapidly. This resistance may be caused by a loose condenser mounting or lead connection, or by poor connections inside the condenser.

### *Pitting of Contacts*

Contact pitting results from the transfer of material from one contact to the other so that a tip builds up on one contact while a pit forms in the other.

A small amount of pitting in several thousand miles is normal and does not affect the distributor operation. However, excessive pitting such as long sharp spikes is harmful and causes arcing and voltage loss. Contacts with this condition should be replaced.

Excessive pitting can be due to too small a contact opening, high primary voltage or wrong condenser capacity. Inspect to be certain the condenser capacity is within the specified range of .25 to .285 MFD; contact spring tension should be 17 to 20 ounces Chrysler built, 17 to 21.5 ounces Prestolite. Contact gap should be .014 to .019 inch.

## INSTALLING AND ALIGNING CONTACTS

(1) Loosen terminal screw nut, and remove primary lead, condenser lead and terminal screw.

(2) Remove stationary contact lock screw and remove old contact set.

MyMopar.com

(3) Install a new contact set; the sleeve at one end of adjustable bracket fits over and pivots on upper contact plate mounting pin, the contact insulator also retains terminal screw head.

(4) Connect condenser and primary leads.

(5) Align contacts, if necessary, by bending stationary contact bracket only. **Never bend** movable contact arm to obtain alignment.

(6) After aligning contacts, adjust contact clearance to "Specifications," using dial indicator (Fig. 13). Recheck contact arm spring tension.

(7) Test dwell angle to show proper degree of closure. See Paragraph, "Distributor Contact Dwell." The lock screw should be loosened just enough so stationary contact bracket can be removed with a slight drag; otherwise, it will be difficult to set contacts accurately. After setting contacts to the correct gap, tighten stationary bracket lock screw.

## DISTRIBUTOR LUBRICATION

(1) Add 3 drops of SAE 10W oil to the oiler on outside of distributor base.

(2) Lubricate felt wick under the rotor in top of distributor cam with 3 drops of SAE 10W oil.

(3) Wipe the distributor cam free of dirt and old grease with a clear lintless cloth. Apply a light film of new distributor cam lubricant Number 1473595 or equivalent over the entire cam surface. Lubricant must be able to adhere to the cam surface thereby resisting being thrown from the cam by centrifugal force, must not melt at operating temperatures and must not harden or dry out with age, must not chemically react or be affected by ozone or cause corrosion or pitting of the metal, must possess moisture control properties to prevent rust formation on the cam.

**CAUTION: A thin film is all that is required. Do not over-lubricate. Excess grease will be thrown from the distributor cam when engine is running. If this grease strikes the contacts, arcing and burning of contacts will result.**

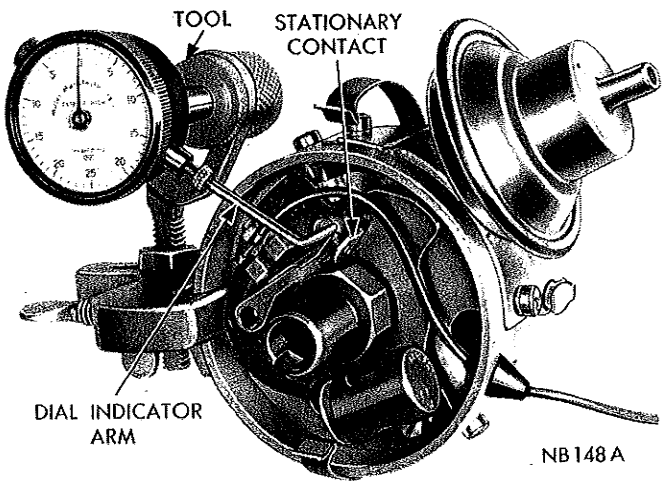


***Fig. 13—Adjusting Contact Clearance with Indicator***

## TESTING DISTRIBUTOR ADVANCE

### *Centrifugal Advance Curve*

Mount distributor assembly (less cap and rotor) in a reliable stroboscope-type distributor tester and proceed with tests as follows: **Clamp around ribbed section of distributor housing. The bottom section of distributor housing is not a machined surface and concentricity would be affected, causing a wobble.**

(1) Turn Tach-Dwell switch to 8 "LOBE" position and Motor Switch to correct direction of rotation. Refer to "Distributor Specifications" in this manual.

(2) Turn battery switch "ON."

(3) Regulate tester speed control to operate distributor at 200 distributor rpm.

(4) Align the "O" of the distributor tester degree ring with any one of the arrow flashes.

(5) Adjust tester speed control to opreate distributor at speeds called for under "Specifications" and observe arrow flashes opposite tester degree ring to determine degrees of advance.

(6) If advance is not according to specifications, corrections can be made by bending the primary and secondary spring tabs on cam yoke to increase or decrease spring tension. The governor spring tabs can be reached through the access hole at breaker plate. Rotate shaft until proper spring and tab line up with access holes. Insert a screwdriver blade through access hole and bend spring tab toward distributor cam to decrease spring tension and advance to spark, or away from the distributor cam to increase spring tension and retard the spark. **The light tension spring controls the lower end of advance curve, and the heavier spring controls upper end of advance curve.**

### *Vacuum Diaphragm Leak Test*

With distributor mounted in distributor tester and with vacuum unit attached to distributor, proceed as follows:

(1) Place thumb over end of vacuum pump and hose and adjust regulator control knob to give a reading of 20 inches with hose closed off to be sure tester hose does not leak.

(2) Attach tester vacuum pump hose to the tube on the distributor vacuum unit. The vacuum gauge should hold on maximum vacuum obtainable if no leak exists.

(3) Observe contact plate while performing leak test to test response of contact plate. There should be instant response to the pull of the diaphragm, moving the plate without a drag or bind.

(4) If leakage is indicated, replace vacuum unit assembly.

MyMopar.com

### *Vacuum Advance Curve*

Connect tester vacuum pump hose to the distributor vacuum advance unit and perform operations 1 through 5 under "Centrifugal Advance Curve." Then proceed as follows:

(1) Turn tester vacuum pump "ON." Adjust vacuum pump regulator to vacuum test specifications. See "Specifications" and observe arrow flashes on tester degree ring to determine degrees of advance.

(2) If vacuum advance is above or below specifications, replace vacuum advance unit. Retest vacuum advance curve.

## DISTRIBUTOR INSTALLATION

(1) Position distributor on engine. Align rotor with marks previously scribed on distributor housing.

(2) Engage tongue of distributor shaft with slot in distributor and oil pump drive gear. **If engine has been cranked while distributor is removed, it will be necessary to establish the proper relationship between distributor shaft and NO. 1 piston position as follows:**

(a) Rotate crankshaft until number one piston is at top of compression stroke.

(b) Rotate rotor to the position of number one distributor cap terminal.

(c) Lower distributor into the opening, connect primary lead and install distributor cap. Make sure all high tension wires "snap" firm in cap towers. Install distributor hold-down clamp screw. Tighten screw finger tight.

(d) Connect secondary lead of a Power Timing Light to NO. 1 spark plug (using proper adapter). Connect red primary lead to positive terminal of battery and black primary lead to negative battery terminal.

(e) Start and operate engine at idle speed. Rotate distributor housing so that specified timing mark and pointer are in alignment (Moving the distributor housing against shaft rotation advances timing and with shaft rotation retards timing).

(f) Tighten distributor clamp screw after timing has been set and recheck timing adjustment with a Power Timing Light.

(g) If timing is correct, connect vacuum hose to distributor and remove timing light from engine.

### *Ignition Timing (with C-744 Test Lamp)*

(1) Connect C-744 test lamp between distributor primary terminal and battery positive post.

(2) Turn engine until number 6 exhaust valve is just closing; continue turning engine slowly until specified degree mark on the crankshaft pulley is at specified degree mark at case cover.

(3) Loosen distributor clamp bolt so distributor housing can be rotated with a slight drag, then turn distributor in the normal rotation until test lamp lights.

(4) Turn distributor against normal distributor rotation until test lamp goes out. **If test lamp lights immediately when connected, turn distributor against normal distributor rotation until light goes out.**

(5) Tighten distributor clamp bolt securely and remove test lamp. If the operation is performed properly the engine is timed to specifications. **If engine is turned beyond the timing mark, continue turning engine for two full revolutions of the crankshaft; this will place the distributor rotor in approximately the initial position.**

**CAUTION: DO NOT reverse rotation of the crankshaft, if you have passed the timing mark as this would affect valve timing and distributor timing.**

## IGNITION COIL

The ignition coil is designed to operate with an external ballast resistor. When testing the coil for output, include resistor in tests.

Inspect coil for external leaks and arcing. Always make two tests when testing the coil. One when the coil is cold, the other after the coil has been warmed up.

Test coil according to coil tester Manufacturer's instructions. Test coil primary resistance. Test ballast resistor resistance. Test coil secondary resistance. Replace any coil and ballast resistor that does not meet specifications.

Every time an ignition coil is replaced because of a burned tower, carbon tracking or any evidence of arcing at the tower, the nipple or boot on the coil end of the secondary cable, replace cable. Any arcing at the tower will carbonize the nipple so that placing it on a new coil will invariably cause another coil failure.

If the secondary cable shows any signs of damage, the cable should be replaced with a new cable with the neoprene nipple since the old cable can cause arcing, and therefore, ruin a new coil.

## BALLAST RESISTOR

The ballast resistor is a compensating resistance in the ignition primary circuit. During low speed operation, when the primary circuit current flow is high, ballast resistor temperature rises, increasing resistance. This reduces current flow, thereby prolonging ignition contact life. At high speed operation, when primary current flow is low, the ballast resistance cools off allowing more current flow, which is required for high speed operation. During starter operation, the ballast resistor is bypassed, allowing full battery voltage to the ignition primary circuit.

## SPARK PLUGS

To insure peak performance, spark plugs should be removed, cleaned, tested and regapped every 5000 miles. Worn and dirty plugs may give satisfactory op-

MyMopar.com

eration at idling speed but may fail under operation conditions. Spark plug appearance or conditions can reflect a wide variety of engine conditions as follows:

### Normal Conditions

Normal conditions (Fig. 1). This plug has been running at the correct temperature in a "healthy" engine. The few deposits present will probably be light tan or gray in color with most regular grades of commercial gasoline. Electrode burning will not be in evidence; gap growth will average not more than about .001"/1000 miles. Chances are the plug, as pictured, could be cleaned, the gap electrodes filed, regapped and reinstalled with good results.

### Cold Fouling

Cold fouling or carbon deposits (Fig. 2). This dry black appearance is fuel carbon and can be due to over rich fuel-air mixture, possibly resulting from a faulty choke, clogged air cleaner, improper carburetor idle adjustment, or dirty carburetor. However, if only one or two plugs in a set are fouled like this it is a good idea to check for sticking valves or faulty ignition cables. This condition also results from prolonged operation at idle. If the vehicle is operated extensively at idle and low speeds, improved plug service will be obtained by using the next step hotter spark plugs.

### Wet Fouling

Wet fouling (Fig. 3) tells you that the plug has drowned in excess oil. In an old engine, suspect worn rings or excessive cylinder wear. In OHV engines, too much oil may be coming in past the valve guides. Use of a notter plug may relieve such fouling, but plugs can't take the place of needed engine overhaul. **Remember that "break-in" fouling of new engines may occur before normal oil control is achieved. In new or recently overhauled jobs, such fouling plugs can be cleaned and reinstalled.**

### Splashed Fouling

Splashed fouling (Fig. 4) may sometimes occur after a long-delayed tune-up. Here, deposits accumulated after a long period of misfiring may be suddenly loosened when normal combustion temperatures are restored upon installation of new plugs. During a high speed run, these materials shedding off the combustion chamber are thrown against the hot insulator surface. If they happen to short out the plug, they can be removed with regular cleaning techniques. The plugs can then be reinstalled with good results as the engine has scavenged itself.

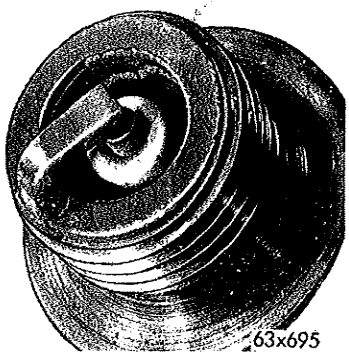


Fig. 1—Normal Conditions

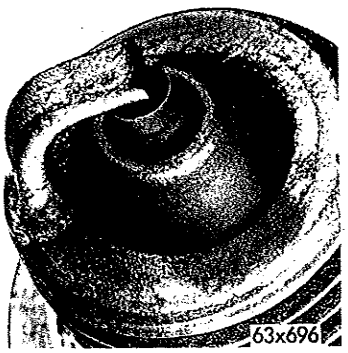


Fig. 2—Cold Fouling

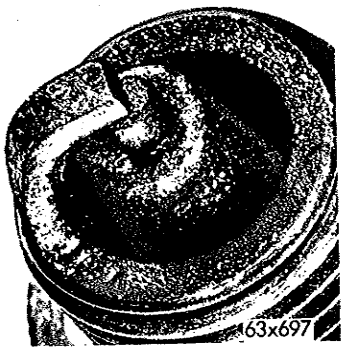


Fig. 3—Wet Fouling




Fig. 4—Splashed Fouling

### Core Bridging

Core bridging (Fig. 5) will be encountered only rarely in automotive engines. It's usually due to the same conditions described under splashed deposits. In this case, a chunk of deposit was thrown off the piston and formed a bridge between the insulator and shell. Result: A "dead short." Such evidence of excessive combustion chamber deposits will be more common where oil control is poor . . . or where vehicles are usually driven in slow speed, start-stop service. In such instances, it usually pays to physically remove accumulated deposits from the engine.

### Gap Bridging

Gap bridging (Fig. 6) is also relatively rare in automotive engines. It also may be traced to flying deposits in the combustion chamber. In a few cases, fluffy deposits may accumulate on the plugs during in-town driving; when the engine is suddenly put under high load, this material can melt and bridge the gap.

### High Speed Glazing

High speed glazing may cause misfiring at speeds above 50-60 mph. The shiny deposit (Fig. 7) may be

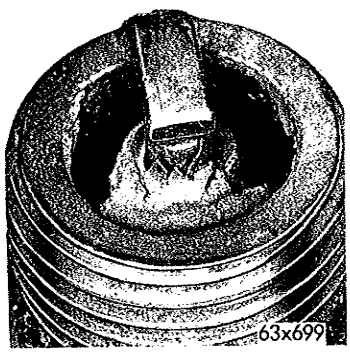


Fig. 5—Core Bridging

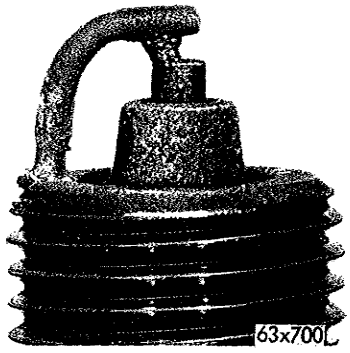


Fig. 6—Gap Bridging

MyMopar.com

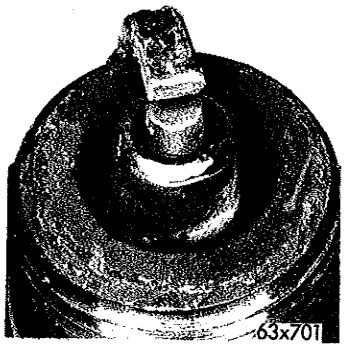


Fig. 7—High Speed Glazing

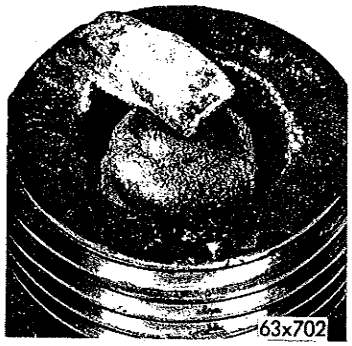


Fig. 8—Scavanger Deposits

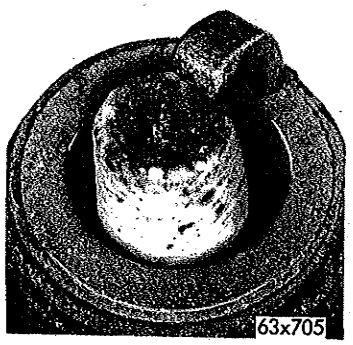


Fig. 11—Initial Pre-Ignition Damage

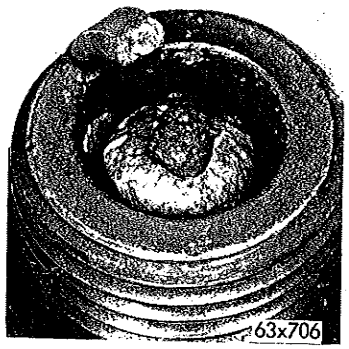


Fig. 12—Sustained Pre-Ignition Damage

yellow or tan in color. It usually suggests that temperatures have suddenly risen during a hard acceleration. As a result normal deposits do not get a chance to fluff off the plug . . . instead they melt and form a conductive coating. If this continues to reoccur, suggest a colder heat range and regular spark plug cleanings.

### Scavenger Deposits

Fuel scavenger deposits (Fig. 8) may be white or yellow in color. They may **appear** to be bad, but this is a **normal** appearance with certain branded fuels. Such materials are designed to change the chemical nature of deposits to lessen misfire tendencies. Notice that accumulation on the ground electrode and shell areas may be unusually heavy, but the material is easily flaked off. Such plugs can be considered normal in procedures.

### Overheating

Overheating (Fig. 9) is indicated by a white or light gray insulator which appears "blistered." Electrode gap wear rate will be considerable in excess of .001"/1000 miles. This suggests that a cooler heat range should be used . . . however, over-advanced ignition timing, detonation and cooling system stoppages can also overheat the **correct** spark plug heat ranges.

### Turbulence Burning

Turbulence burning (Fig. 10) causes electrodes to wear away on one side. This is the result of normal turbulence patterns in the combustion chambers of certain engines. It can be ignored if normal plug life is being obtained. If gap growth appears excessive, review the corrective measures suggested under **overheating.**

### Initial Pre-ignition Damage

Initial pre-ignition damage (Fig. 11) may be caused by excessive temperatures. This produces melting of the center electrode and, somewhat later, the ground electrode. Remember that the spark plug is like an electric fuse . . . when it melts, it warns you to look for the causes, and for damage to the engine such as scuffed pistons, burned pistons or burned valves. Inspect for correct spark plug heat range, over-advanced ignition timing, loose spark plugs, burned head gasket, excessive detonation due to low octane fuel and for similar causes of overheating.

### Sustained Pre-ignition Damage

Sustained pre-ignition damage (Fig. 12) usually involves melting of the ceramic firing tip. Since this requires temperatures above 1700F, it's a good possibility that other components of the engine may have been damaged by pre-ignition. This is another sure sign that careful inspection of the engine and its adjustments are required.

### Chipped Insulator

Chipped insulator (Fig. 13) usually results from

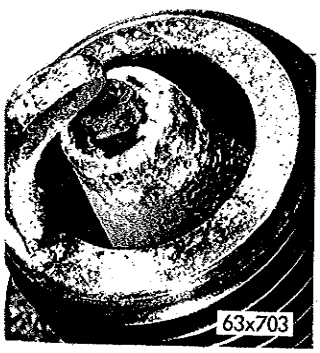


Fig. 9—Overheating

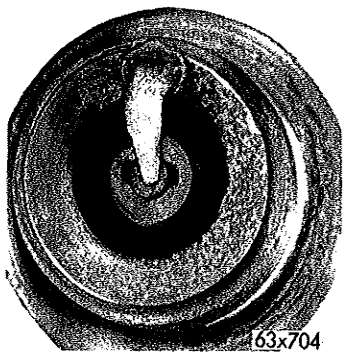


Fig. 10—Turbulence Burning

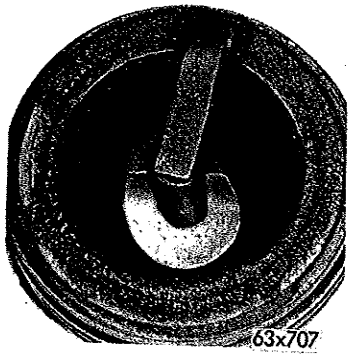


Fig. 13—Chipped Insulator




Fig. 14—Mechanical Damage

MyMopar.com

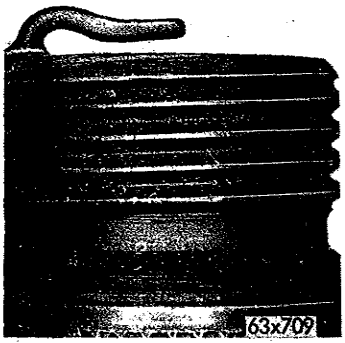


*Fig. 15—Pressure Type Gap Tool Damage*

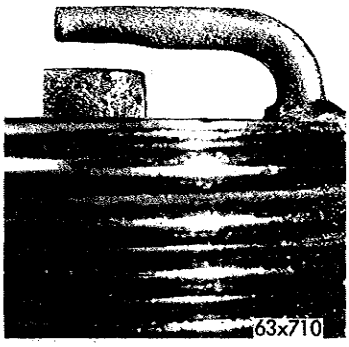


*Fig. 16—Reversed Coil Polarity*

bending the center electrode during regapping of the plug. Under certain conditions, severe detonation can also split insulator firing ends. In a four-cycle engine, a piece of ceramic like this is easily blown out through the exhaust.

### *Mechanical Damage*

Mechanical damage to the firing end (Fig. 14) is caused by some foreign object in the combustion chamber. Since small objects can travel from one cylinder to another, always check the other cylinders to prevent reoccurrence of damage.

### *Pressure Type Gap Tool*

Pressure type gap tools, if improperly used, impose a tremendously high unit pressure on the center electrode (Fig. 15). This is because of compression being exerted between the end of the center electrode and the top of the shell. If too much force is applied thru leverage multiplication, the center electrode seal on any type or brand of spark plug is likely to be damaged. There are several of these pliers type gap tools on the market.

### *Reversed Coil Polarity*

Reversed coil polarity can often be detected by "dishing" of the ground electrode. Note in Figure 16 that the center electrode is usually not worn badly. This source of misfiring and rough idle can be corrected by reversing the primary coil leads. An oscilloscope is the surest way to detect reversed polarity.

While these examples may not be conclusive in all instances, they may indicate possible corrective procedures and further diagnosis may be necessary.

### *Cleaning and Regapping*

Carefully clean the spark plugs in an abrasive type cleaner. Use a pin type feeler gauge to check spark plug gap. Reset gaps to .035 inch. **Before setting spark plug gap, file center electrode flat, make adjustment by bending ground (side) electrode, never bend the center electrode.**

Inspect spark plug cables, coil secondary (high tension) cable, nipples and covers for cracks, wear and fraying. Always use the neoprene insulating nipples whenever it becomes necessary to replace high tension cables or nipples. Inspect for loose terminals.

When installing spark plugs, tighten to 30 foot-pounds.

# HEADLIGHTS

## INDEX


| | Page |
|---|---|
| Adjusting the Headlights | 65 |
| Compensating the Aimers | 65 |
| Headlights | 64 |
| Headlight Sealed-Beam Replacement | 67 |
| Measuring Headlight Aim | 67 |
| Mounting and Adjusting the Aimers | 66 |
| Pre-Aiming Instructions | 65 |
| Service Diagnosis | 65 |
| Testing Aimer Calibration | 66 |
| Visual Headlight Adjustment (Without Aimers) | 67 |


## GENERAL INFORMATION

### FURY

The dual headlight system on FURY models consists of four sealed beam headlights.

The two upper lights are of the two filament type for low and high beam and are marked by a numeral 2 molded in the light lens. The two lower lights have only one filament and are marked with a numeral (1) molded in the glass.

The lights cannot be installed wrong as the mounting lugs for the number one (1) and number two (2) lights are offset at different angles.

On high beam, the number 1 light provides the high intensity "reach" down the highway and the off focus filament in the number 2 light provides the "body" light which illuminates the side of the road, ditches, etc. On low beam, only the number two (2) lights operate.

### VALIANT, BARRACUDA, BELVEDERE AND SATELLITE

The single beam system consists of two sealed beam head lights.

The lights are the two filament type for low and high beam and are marked by a number 2 molded in the light lens.

The low beam is intended for use in congested areas and on highways when meeting other vehicles within a distance of 500 feet. The high beam is intended primarily for distant illumination and for use on the open highway when not meeting other vehicles.

MyMopar.com

## SERVICE DIAGNOSIS

| Condition | Possible Cause | Correction |
|---|---|---|
| **HEADLIGHTS DIM (engine running above idle)** | (a) High resistance in lighting circuit. | (a) Test lighting circuit including ground connection. Make necessary repairs. |
| | (b) Faulty sealed beam units. | (b) Replace sealed beam units. |
| | (c) Faulty voltage regulator. | (c) Test voltage regulator and alternator. Make necessary repairs. |
| **LIGHTS FLICKER** | (a) Loose connections or damaged wires in lighting circuit. | (a) Tighten connections and check for damaged wiring. |
| | (b) Light wiring insulation damaged producing momentary short. | (b) Test wiring and replace or tape damaged wires. |
| **LIGHTS BURN OUT FREQUENTLY** | (a) High voltage regulator setting. | (a) Adjust voltage regulator. |
| | (b) Loose connections in light circuit. | (b) Tighten connections. |
| **LIGHTS WILL NOT LIGHT** | (a) Discharged battery. | (a) Recharge battery and correct cause. |
| | (b) Loose connections in lighting circuit. | (b) Tighten connections. |
| | (c) Burned out lamps. | (c) Replace bulbs or sealed beam unit. |
| | (d) Open or corroded contacts in headlight switch. | (d) Replace headlight switch. |
| | (e) Open or corroded contact in dimmer switch. | (e) Replace dimmer switch. |
| **HEADLIGHTS DIM (engine idling or shut off)** | (a) Partly discharged battery. | (a) Charge battery. |
| | (b) Faulty battery. | (b) Test battery. Replace if necessary. |
| | (c) High resistance in light circuit. | (c) Test headlight circuit including ground connection. Make necessary repairs. |
| | (d) Faulty sealed beam units. | (d) Replace sealed beam units. |
| | (e) Corroded battery terminals. | (e) Clean terminals. |

## SERVICE PROCEDURES

### TESTS AND ADJUSTMENTS

#### *Pre-Aiming Instructions*

(1) Test dimmer switch operation.

(2) Test high beam indicator—indicates **high** beam is in operation when lighted.

(3) Inspect for badly rusted or faulty headlight assemblies. These conditions must be corrected before a satisfactory adjustment can be made.

(4) Place vehicle on a level floor.

(5) Adjust front suspension height as necessary.

(6) Inspect tire inflation.

(7) Rock vehicle sideways to allow vehicle to assume its normal position.

(8) If gasoline tank is not full, place a weight in trunk of vehicle to simulate weight of a full tank (6¼ pounds per gallon).

(9) There should be no other load in vehicle other than driver or substituted weight of approximately 150 pounds placed in driver's position.

(10) Remove headlight front trim panel. Do not remove the sealed beam retainer rims.

(11) Thoroughly clean headlight lenses.

#### *Compensating the Aimers*

(1) Place transit on floor in line with vertical centerline of right front wheel (Fig. 1). Place split image target in like position at right rear wheel.

(2) Adjust range screw on transit until target split image coincides or merges into one unbroken line.

**Make sure that the line of sight is perpendicular from the eye to the viewing port of the transit and that the target image is centered in viewing port of transit.**

(3) Turn dial on side of transit until bubble in spirit level is centered.

(4) When bubble is centered, note "plus" or "minus" reading on compensator scale. This figure indicates degree of slope of floor and must be trans-

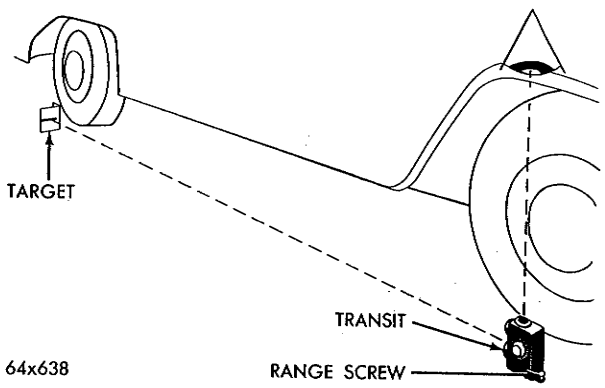


*Fig. 1—Determining Slope of Floor*

MyMopar.com

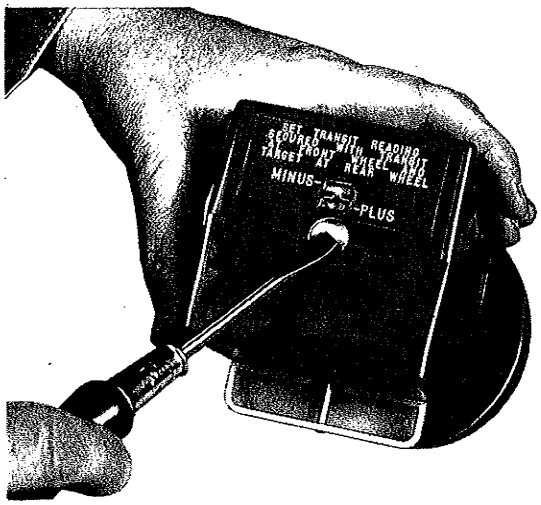


*Fig. 2—Adjusting Floor Level Compensators in Aimers*

ferred to each aimer.

(5) With a screw driver, turn adjusting slot of floor level compensator in each aimer, until correct plus or minus figure (or fractional part) appears in proper window, Fig. 2.

### *Testing Aimer Calibration (Fig. 3)*

(1) Using carpenter or stone mason level of known accuracy, locate a true vertical plate glass window or smooth surface.

(2) Set **DOWN-UP** pointer on **DOWN 2.**

(3) Set **RIGHT-LEFT** pointer and floor level compensator at "0."

(4) Secure aimers to glass or smooth surface three to five feet apart so split image targets can be located in viewing ports.

(5) If bubble is centered in glass dial, vertical calibration is correct. If bubble is not centered, make **DOWN-UP** adjustment by rotating level adjusting screw until bubble is centered in spirit level.

(6) The horizontal aim is correct if targets on opposite aimers are aligned in viewing ports. If targets are not aligned in viewing ports, rotate mirror adjusting screw until target split image becomes aligned.

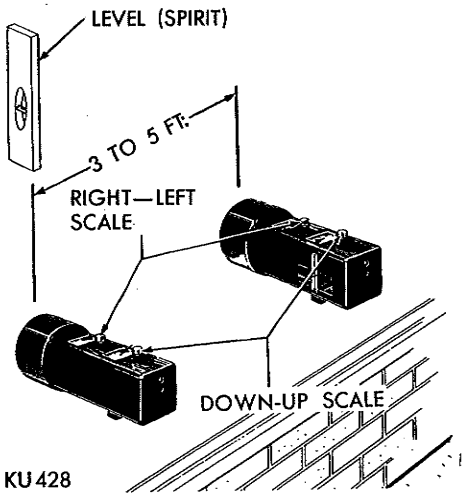


*Fig. 3—Checking Aimer Calibration*

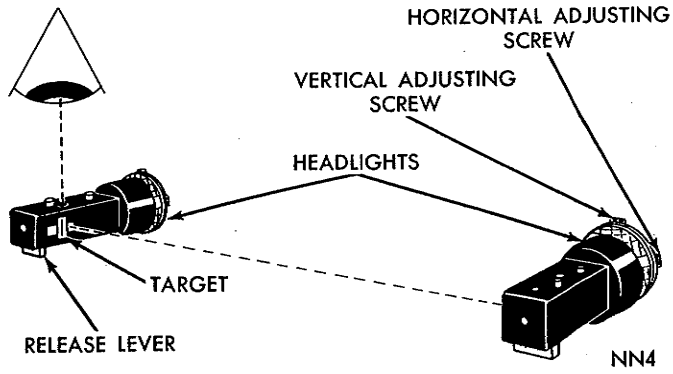


*Fig. 4—Mounting and Adjusting Aimers*

## MOUNTING AND ADJUSTING THE AIMERS

(1) While holding an aimer in alignment with lens of one headlight on Valiant, Barracuda, Satellite and Belvedere models and on an upper (top) headlight on Fury models, bring aimer up to and against head light lens. **Make certain that headlight lens pads are making full contact with aimer mounting flange and that aimer target is facing inboard.**

(2) Push release lever forward (to expel air from suction cup) and while holding aimer firmly against headlight aiming pads, slowly pull release lever back until spring lock engages in the slot, (Fig. 4).

(3) Mount second aimer on other side of vehicle, in same manner.

(4) On each aimer, set pointer to numeral 2 on **DOWN** side of the **DOWN-UP** scale.

(5) On each aimer position the pointer, of the **RIGHT-LEFT** scale, at **2-RIGHT.**

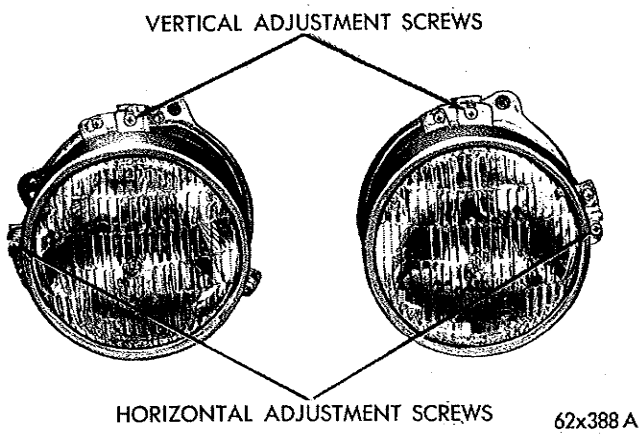


*Fig. 5—Headlight Adjustment Points*

MyMopar.com

## MEASURING HEADLIGHT AIM

### *Horizontal Test*

Turn the RIGHT-LEFT scale knob until the split image is in alignment. If the **RIGHT** or **LEFT** PORTION of scale exceeds the following values, the lights should be aimed.

Values given represent inches at 25 feet.

| | Left | Right |
|---|---|---|
| No. 1 Unit | 4 | 4 |
| No. 2 Unit | 0 | 4 |

### *Vertical Test*

Turn **DOWN-UP** scale knob until the spirit level is centered. If **Down** or **Up** portion of the scale exceeds the following values, the lights should be aimed.

| | |
|---|---|
| No. 1 Unit | ½ to 3½ down |
| No. 2 Unit | ½ to 3½ down |

### *Horizontal Adjustment*

(1) With pointer of **RIGHT-LEFT** scale still set **2-RIGHT,** sight through aimer viewing port.

**Make sure that line of sight is perpendicular from eye to viewing port of aimer and that target image is centered in viewing port of aimer.**

(2) While sighting through viewing port of aimer, turn horizontal adjusting screw on headlight until split target image line merges into one unbroken line. To remove backlash, be sure to make a final adjustment by turning headlight horizontal adjusting screw in a clockwise direction, (Fig. 5).

(3) Make horizontal adjustment on other side of vehicle in same manner.

### *Vertical Adjustment*

(1) Turn vertical adjusting screw on headlight in counterclockwise direction to bring bubble of spirit level on aimer to vehicle side of center. Use care to avoid disturbing installed position of aimers. Then turn screw clockwise until bubble is centered for correct aim and elimination of backlash.

(2) Make vertical adjustment on other side of vehicle in same manner.

(3) Inspect target alignment on each side and readjust the horizontal aim, if necessary.

Proceed to adjust bottom units on Fury Models by repeating outlined procedure. Install headlight trim panels.

**Remove aimers by releasing spring lock at rear (bottom) of aimer and pushing release lever forward. Do not attempt to remove the aimers by pulling away from headlight lens—slide suction cup downward and away from lens.**

## HEADLIGHT SEALED BEAM REPLACEMENT (ALL MODELS)

The lens, filament and reflector are sealed into one unit which can be removed as follows:

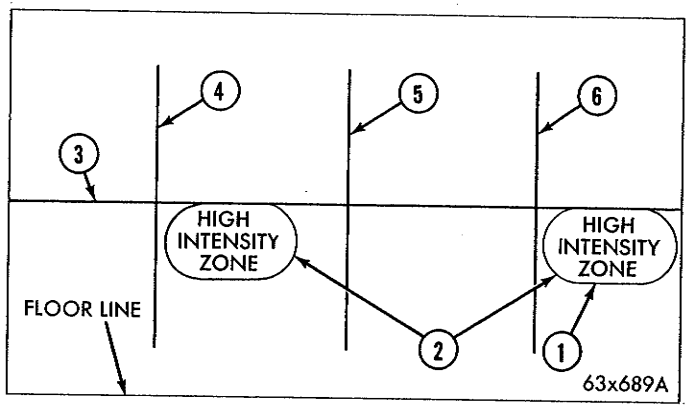


*Fig. 6—Single Beam Adjustment Pattern*

(1) Remove screws from headlight panel and remove panel.

(2) Remove screws from interior retaining ring, and remove ring. **Do not disturb headlight aimer screws.**

(3) Pull out sealed beam unit and unplug connector, pulling straight off.

(4) Install new sealed beam unit.

(5) Install unit retaining ring.

(6) Aim the headlight and install headlight panel.

## VISUAL HEADLIGHT ADJUSTMENT (Without Aimers) Single Beam

Place vehicle on a known level floor 25 feet from aiming screen or light colored wall.

Four lines are required on screen or wall: (See Fig. 6).

(a) A horizontal line at the level of centers of headlights, line number 3.

(b) A center vertical line which must be lined up with center of hood, line number 5.

(c) A vertical line on left of screen or wall in line with center line of left headlight line number 4.

(d) A vertical line on right of screen or wall in line with center line of right headlight, line number 6.

Remove headlight door. Adjust top adjusting screw for vertical adjustment, adjust side screw for horizontal adjustment. (See Fig. 5.)

Refer to Figure 6 and adjust headlight as follows:

(1) Lower beam pattern of right headlamp.

(2) Lower beam pattern of both headlights.

(3) Horizontal line at level of headlight centers.

(4) Vertical line in line with center of left headlight.

(5) Vertical line in line with center of hood.

(6) Vertical line in line with center of right headlight.

MyMopar.com

# INSTRUMENTS—INDICATORS

## INDEX


| | Page |
|---|---|
| Fuel Level Indicating System | 70 |
| Fuse Block | 72 |
| General Information | 68 |
| Heater or Air Conditioning Controls | 75 |
| Instrument Clusters | 71 |
| Light Bulb Replacement | 71 |
| Oil Pressure Indicators | 71 |
| Printed Circuit Boards | 72 |
| Service Diagnosis | 69 |
| Specifications | 100 |
| Switches | 74 |
| Tests | |
| In Vehicle | 70 |
| Out of Vehicle | 73 |
| Voltage Limiter | 68 |


## GENERAL INFORMATION

### *Valiant, Belvedere and Satellite Models*

The instrument cluster assembly is attached to the instrument panel by four cross-recessed screws. The cluster contains the speedometer, fuel gauge, temperature gauge, alternator (ammeter), oil pressure warning light and clock (if so equipped). The instruments and lamps are attached to a printed circuit board in which are imbedded the electrical circuits (conductors) in the form of die cut, copper foil strips.

The printed circuit completes the circuit to the fuel gauge, temperature gauge, voltage limiter and instrument lamps. The screws attaching the printed circuit board to the cluster base serve as a ground for the instrument lamps and the voltage limiter.

With the exception of the leads to the alternator (ammeter) and clock, all wiring to the cluster is connected through a plug type multi-connector to the male connector pins on the printed circuit board which is mounted to the back of the instrument cluster assembly. The female multi-connector is a push type with a master locator pin.

The fuel and temperature gauges are the thermal type. The gauges operate on a principle of a constant voltage being applied and are sensitive to changes in fuel level or temperature.

### *Barracuda Models*

All instruments are mounted in a single cluster. The temperature and fuel gauges are mounted to the left of the speedometer. Next to the speedometer is a tachometer or vacuum gauge (depending on the customers preference) and the oil gauge, alternator gauge and the heater controls to the far right.

### *Fury Models*

The instruments and gauges are contained in two groups or clusters mounted on the instrument panel in front of the driver. The cluster above the steering column contains the speedometer, turn signal indicators and the necessary cluster illumination bulbs. The cluster to the left of the steering column contains the alternator (ammeter) gauge, fuel and temperature gauges and the oil pressure indicator lamp. The clock (if so equipped) is located on the instrument panel in line with the radio. The gauges are the thermal type and are sensitive to changes in fuel level, temperature of the engine coolant and engine oil pressure respectively.

## VOLTAGE LIMITER

Constant voltage is provided to the gauges through the use of a voltage limiter mounted externally on the back of the instrument cluster printed circuit board on Valiant, Belvedere and Satellite models. On Fury and Barracuda models the voltage limiter is contained inside the fuel gauge. In both applications, the voltage limiter is connected in parallel to provide the same regulated voltage to the gauges.

## FUEL LEVEL INDICATING SYSTEM (Figs. 1 and 2)

Turning the ignition key on, connects the system to the battery or charging system voltage. The function of the voltage limiter is to regulate this input voltage from the battery or charging system to a constant voltage of approximately 5 volts D.C.

The effect of this constant voltage supply is to

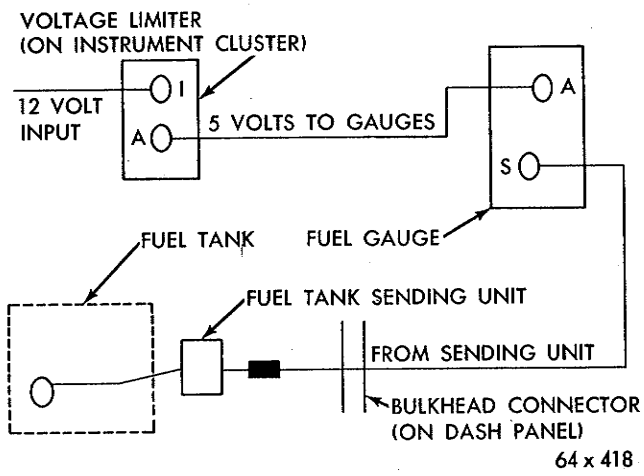


***Fig. 1—Fuel Level Indicating System—Valiant—Belvedere and Satellite Models***

MyMopar.com

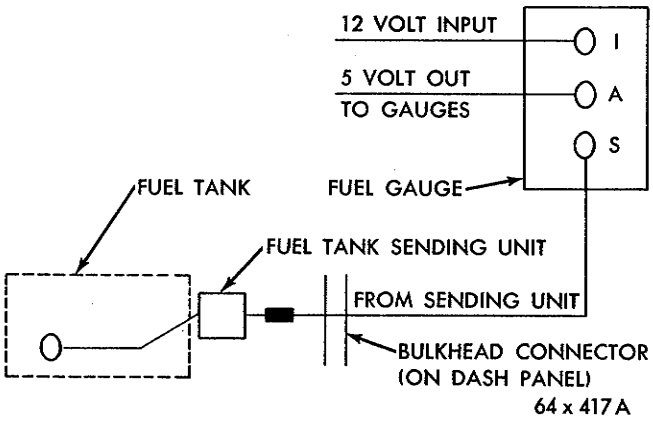


***Fig. 2—Fuel Level Indicating System—Fury and Barracuda Models***

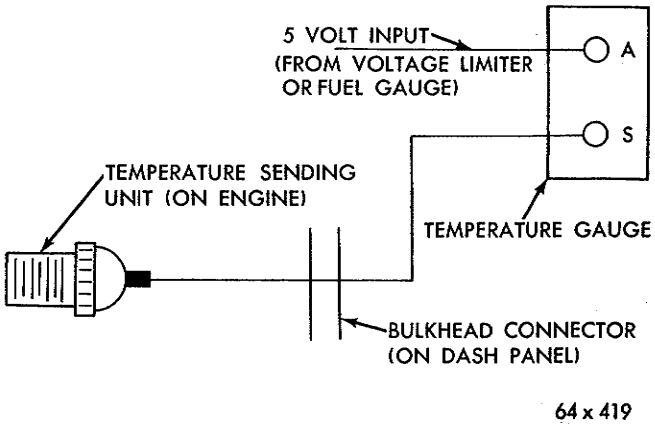


***Fig. 3—Temperature Indicating System***

cause the balance of the system to be sensitive to changes in the valve of resistance at the tank unit only.

A float arm is hinged to allow the float to raise or lower dependent on the fuel level. The float connects to a variable resistance that provides a change in the resistance with any up or down movement of the float through a wiping contact in the gauge body.

When the fuel level is low or if the fuel tank is empty, the resistance is increased which decreases the current flow and consequently positions the instrument panel gauge pointer to low or empty.

When the tank is full, the float level is at the top, the minimum resistance is in the circuit and the flow of current in the circuit is high. The instrument panel gauge pointer will be moved across the dial to indicate a full tank.

## TEMPERATURE INDICATING SYSTEM (Fig. 3)

The operation of the temperature indicating system is identical in operation with the fuel system with the exception of the method of varying the resistance of the sending unit. In this system the resistance varies in direct relation to the temperature of the coolant.

Any change in the coolant temperature causes a like change in the resistor incorporated in the engine sending unit.

When the engine is cold the resistance of the disc in the temperature sending unit is high and a low temperature will be indicated.

As the engine temperature increases, the resistance of the temperature sending unit disc starts to decrease. A resultant increase in the current flow will occur causing the gauge pointer to indicate the increase in engine temperature.

## OIL PRESSURE WARNING LIGHT

The oil pressure warning switch, mounted on the engine, is controlled by the engine oil pressure.

When the engine oil pressure is high (normal operating condition of the engine) the switch is held in the **"OFF"** or **"OPEN"** position allowing no current to flow to the oil pressure warning lamp on the instrument panel.

When the engine oil pressure is low the switch is in the **"ON"** or **"CLOSED"** position allowing current to flow to the oil pressure warning lamp on the instrument panel causing the warning lamp to be illuminated.

## SERVICE DIAGNOSIS

| Condition | Possible Cause | Correction |
|---|---|---|
| **ALL GAUGES READ HIGH ("against the peg") AFTER IGNITION SWITCH IS TURNED "ON."** | (a) Faulty voltage limiter. | (a) Test the voltage limiter. Replace as necessary. |
| | (b) Cluster not properly grounded to panel. | (b) Tighten cluster mounting screws. |
| **GAUGE POINTERS DO NOT MOVE WHEN IGNITION SWITCH IS TURNED "ON."** | (a) Faulty voltage limiter or an open circuit on battery side (input of limiter). | (a) Test voltage limiter. Test wiring, repair or replace as necessary. |
| **TEMPERATURE GAUGE INDICATES NORMAL OPERATION,BUT THE FUEL GAUGE IN-** | (a) Fuel tank sending unit or instrument panel fuel gauge is faulty. | (a) Test sending unit and gauge. |
| | (b) Fuel tank is improperly grounded. | (b) Test fuel tank for a good ground. NOTE: Testing the system with the |

MyMopar.com

| Condition | Possible Cause | Correction |
|---|---|---|
| DICATES A HIGHER OR LOWER FUEL LEVEL THAN ACTUALLY EXISTS. | | tank sending unit positioned for both "empty" and "full" is usually sufficient to determine the calibration in the range between these positions. |
| FUEL GAUGE INDICATES CORRECTLY BUT TEMPERATURE GAUGE INDICATES HIGHER OR LOWER TEMPERATURE THAN ACTUAL ENGINE TEMPERATURE. | (a) Faulty instrument panel temperature gauge, wiring or faulty temperature sending unit in engine. | (a) Test wiring, repair or replace as necessary. Test gauge and sending unit. |
| ERRATIC TEMPERATURE GAUGE OPERATION. | (a) Loose or dirty electrical connections. | (a) Clean and tighten all electrical connections and test the gauge operation. |
| ERRATIC OPERATION OF FUEL GAUGE. | (a) Loose or dirty electrical connections or faulty fuel tank sending unit. | (a) Test fuel gauge sending unit, and proceed as follows:<br>(1) Clean and tighten all electrical connections.<br>(2) Inspect the fuel tank ground strap and make sure tank is grounded to the frame. |

## SERVICE PROCEDURES

### TESTS IN VEHICLE

The voltage limiter can be tested in the vehicle or with the instrument cluster removed. To quickly test the voltage limiter in the vehicle, connect one lead of a voltmeter or test light to the temperature sending unit and the other lead to a good ground. Leave the sending unit lead wire attached to the sending unit.

Turn the ignition switch to the **"ON"** position. A fluctuating voltmeter or a flashing light indicates the voltage limiter is operating.

### FUEL INDICATING SYSTEM

#### *Fuel Gauge*

(1) Disconnect terminal at fuel tank sending unit. Connect one lead of Tester C-3826 to disconnected wire and the other to a good ground. Turn ignition key on.

(2) Turn knob on dial of tester to "H" and observe gauge on panel. It should read "Full," plus or minus 3/32".

With dial knob on "M," panel gauge should read ½.

With dial knob on "L," panel gauge should read "Empty," plus or minus 3/32".

(3) If panel gauge does not perform as described, continuity of circuit from tank sending unit to panel unit should be tested with special attention to printed circuit board before replacing panel gauge.

(4) Should panel unit perform properly, fuel tank sending unit ground strap should be inspected for proper installation on fuel line (Fig. 4). If ground continuity is satisfactory, remove tank unit for testing. See "Fuel System," Group 14.

#### *Temperature Indicating System*

Disconnect the terminal from the temperature sending unit on the engine. Connect one test lead of tester C-3826 to the terminal and the other test lead to a good ground. Place the pointer of the gauge tester on the **"L"** position and turn the ignition switch to "on." The temperature gauge should show "C" plus or minus ⅛ inch. **Thermal gauges are slow in operation. Allow time for gauge to heat up.**

Place the pointer of the tester on the **"M"** position and the temperature gauge should advance to the driving range or ½ position of the dial. Place the pointer of the tester in the **"H"** position and the gauge should advance to the "H" position of the dial. Should the gauge respond to the above tests but not operate when the terminal is attached to the sending unit, indications are of a defective sending unit and it should be replaced.




***Fig. 4—Fuel Tank Ground Strap***

MyMopar.com

Should the gauge fail to respond to the above tests, indications are of possible loose connections, broken wire, open printed circuit, or faulty gauge. The instrument cluster should be removed for further inspection. See "Instrument Cluster."

## OIL PRESSURE WARNING LIGHT

To test the oil pressure warning lamp, remove the terminal from the oil pressure sending unit. Connect one lead of the gauge tester to the terminal and the other test lead to a good ground.

With the ignition switch in the "on" position and the gauge tester in the **"L"** position, the warning lamp should not light. With the gauge tester in the **"M"** position, the warning lamp should show a dull glow. With the gauge tester in the **"H"** position, the lamp should show full brilliance.

Should the oil pressure warning lamp fail to respond to the above tests, indications are of possible loose connections, broken wire, or a burned out lamp.

## INSTRUMENT CLUSTER BULB REPLACEMENT

The bulbs in the instrument clusters are retained by sockets plugged into the printed circuit board. They can be replaced from under the panel on all but Fury models equipped with air conditioning. Then it is necessary to remove the cluster. On Belvedere, air conditioning equipped models, it is necessary to remove the left spot cooler hose for access to all light bulbs on the right side of the cluster. To remove the socket, turn it ¼ turn counterclockwise and pull out. For replacement bulb number, see the Bulb Chart Specifications.

## INSTRUMENT CLUSTERS

### *Valiant Models*

### *Removal*

(1) Disconnect battery ground cable.

(2) Disconnect speedometer cable.

(3) Remove steering column clamp and lower steering column support plate at the bulkhead to lower the steering column.

(4) Apply tape to top of steering column to prevent damaging painted finish.

(5) Remove four cluster mounting screws and pull cluster out far enough to disconnect printed circuit board and ignition switch multiple connectors.

(6) Disconnect ammeter wires and remove cluster to a padded work bench for servicing.

### *Installation*

(1) Position cluster in panel opening and install ammeter wires, printed circuit board and ignition switch multiple connectors to their respective terminals.

(2) Insert cluster in panel opening and install four retaining screws.

(3) From under panel, connect speedometer cable and remove tape from steering column.

(4) Install steering column clamp and steering column lower support plate at bulkhead finger tight, align steering column. See "Steering Column Alignment," Group 21.

(5) Tighten steering column support plate and bracket nuts.

(6) Install battery ground cable and test operation of all instruments.

### *Barracuda Models*

### *Removal*

(1) Disconnect battery ground cable and tape top of steering column jacket to prevent damaging finish.

(2) From under panel, disconnect speedometer cable.

(3) Remove heater control knobs.

(4) Remove three retaining screws in the heater control bezel and remove the bezel.

(5) Remove ignition switch bezel with Tool C-3824.

(6) Remove steering column clamp and loosen the screws in the steering column support plate at bulkhead.

(7) Remove four cluster retaining screws and pull cluster out far enough to disconnect the two printed circuit multiple connectors, and ammeter gauge wires.

(8) Roll cluster out and remove to padded work bench for servicing.

### *Installation*

(1) Position cluster in opening, install multiple connectors and ammeter gauge wires.

(2) Secure cluster to panel with the four retaining screws.

(3) Install steering column clamp, tighten steering column support plate to bulkhead and align steering column. See "Steering Column Alignment" Transmissions, Group 21.

(4) Install ignition switch and heater control bezel.

(5) Next install heater control knobs and connect speedometer cable.

(6) Connect battery ground cable, remove tape from steering column jacket and test operation of all gauges.

### *Removal—Belvedere and Satellite Models*

(1) Disconnect battery ground cable and tape the steering column to prevent damage to paint finish.

(2) Disconnect speedometer cable, remove steering column cover and the steering column clamp.

(3) Remove the six screws in upper and lower face of the cluster bezel. Pull cluster out far enough to remove multiple connectors from headlamp and wiper switches and printed circuit board. Next remove the two ammeter gauge wires, the heater switch wires and control cables.

(4) Remove cluster to bench for servicing.

MyMopar.com

### Installation

(1) Rest cluster on steering column in front of panel opening and connect heater control cables, heater blower switch wires, ammeter gauge wires, multiple connector to printed circuit board, headlamp and wiper switches.

(2) Insert cluster into panel opening and secure with six metal screws.

(3) Install speedometer cable, steering column clamp and align steering column. See "Steering Column Alignment," Transmissions Group 21.

(4) Install column cover, connect the battery ground cable and test operation of all lights and gauges.

## INSTRUMENT CLUSTER

### Fury Models

### Removal

(1) Disconnect battery ground cable.

(2) Remove the five screws from bezel and pull cluster out far enough to provide access to multiple connector and ammeter gauge wires.

(3) Disconnect printed circuit multiple connector and two ammeter leads and remove cluster to a padded bench for service.

### Installation

(1) Connect multiple connector to printed circuit board and two ammeter leads to terminals.

(2) Position cluster in panel opening and install the five retaining screws.

(3) Connect battery ground cable and test the operation of gauges.

## SPEEDOMETER CLUSTER

### Removal

(1) Disconnect battery ground cable.

(2) Tape steering column jacket to protect paint finish and remove instrument cluster. See "Instrument Cluster Removal."

(3) Disconnect speedometer cable, remove steering column cover plate and gear selector indicator, if so equipped and remove steering column bracket.

(4) Remove the four cluster screws, pull cluster out far enough to disconnect multiple connector and turn signal bulbs from printed circuit board.

(5) Remove cluster to a padded bench for service.

### Installation

(1) Position cluster in front of panel opening and connect turn signal bulbs and multiple connector to printed circuit board and secure cluster to panel with the four retaining screws and install steering column bracket.

(2) Connect speedometer cable, install gear selector indicator, if so equipped, and steering column cover.

(3) Install instrument cluster.

(4) Connect battery ground cable and test operation of lights and instruments.

### Printed Circuit Board—All Models

The printed circuit board is removed from the instrument cluster by removing the screws retaining the cluster bezel to the cluster housing. Remove the fuel gauge and temperature gauge terminal nuts and remove the gauges. Remove the three screws from the printed circuit board and lift printed circuit board from back of the housing.

A visual inspection of the conductors should be made for cracks or damaged circuits. If no visual damage is evident, each circuit should be tested for continuity with an ohmmeter or a test light. Should an open circuit be detected, the printed circuit board should be replaced.

## GAUGES—ALL MODELS

The instruments are removed from all clusters after removal of the screws retaining the cluster bezel to the cluster housing. On Valiant models it is necessary to remove the ignition switch also. Separate the bezel from the housing. Remove the instrument (temperature, fuel or oil gauge) terminal nut from the back of the printed circuit board and remove the gauge from the cluster housing. The ammeter gauge is removed in the same manner directly from the cluster housing.

## FUSE BLOCK (Fig. 5)

The fuse block is located at the forward edge of the instrument panel and is retained to the instrument panel lower reinforcement by a self tapping screw.

In the fuse block are mounted the radio, cigar lighter, air-conditioner or heater, tail-stop-dome light and accessory fuses. The fuse capacity is printed on the fuse block as an aid to replacement requirements.

## CIRCUIT BREAKERS

As a safety precaution, circuit breakers are used

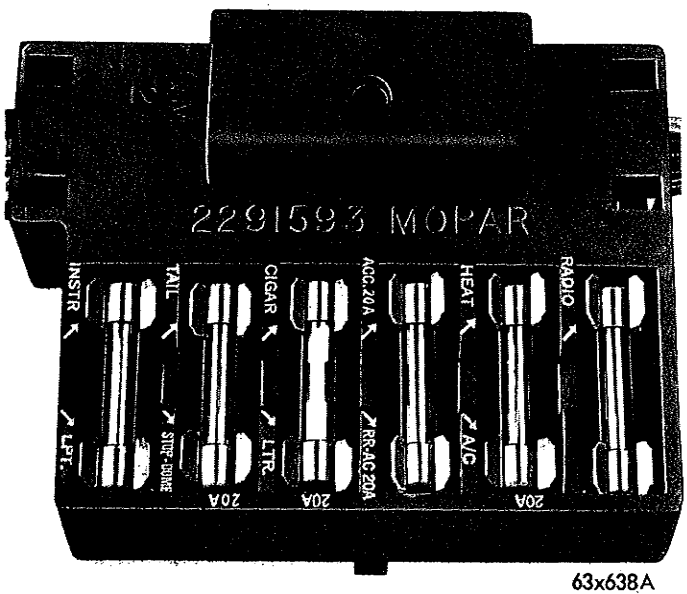


*Fig. 5—Fuse Block*

MyMopar.com

for the headlamps and wiper circuits. They insure that these essential services will continue to function if an intermittent short circuit occurs. Use only identical type and amperage value circuit breakers as replacements for service. See "Specification" for the location of circuit breakers.

## TEST OUT OF VEHICLE

### *Voltage Limiter*

To test the voltage limiter out of the vehicle, connect a jumper wire from the positive post of a 12 volt test battery to the voltage limiter input terminal on Valiant, Belvedere and Satellite models. On Fury and Barracuda models the jumper wire from the positive post of the battery is connected to the "I" terminal of the fuel gauge.

Connect another jumper wire from the battery negative terminal to the voltage limiter case on Valiant, Belvedere and Satellite models or to the fuel gauge case on Fury and Barracuda models.

Connect the negative lead of the voltmeter to the battery negative terminal. Touch the positive lead of the voltmeter to the input terminal of the voltage limiter on Valiant, Belvedere and Satellite models or to the "I" terminal of the fuel gauge on Fury and Barracuda models. A reading of 12 volts should be shown on the voltmeter.

Move the positive lead of the voltmeter to the output terminal of the voltage limiter on Valiant, Belvedere and Satellite models or to the "A" terminal of the fuel gauge on Fury and Barracuda models.

A fluctuating reading between 0 and 7 volts should be shown on the voltmeter.

On Fury and Barracuda models the same reading should be shown at the sending terminal of the fuel gauge. Any other readings indicate the voltage limiter is not functioning and should be replaced on Valiant, Belvedere and Satellite models. On Fury and Barracuda models, the fuel gauge should be replaced.

### *Fuel Tank Sending Unit*

(1) Remove tank sending unit from fuel tank.

(2) Using an Ohmmeter with a 0 to 100 ohm scale, connect one lead to body of sending unit and the other lead to terminal in center of unit.

(3) Hold unit so float arm contacts "Empty Stop." The reading on the Ohmmeter scale should be 73 Ohms, plus or minus 12.0 ohms.

(4) Raise arm to "Full Stop." The reading should now be 9.6 ohms, plus or minus 1 ohm.

(5) If unit does not perform to these specifications, inspect stops or arm for possible distortion. If stops or arm cannot be repaired or are not damaged, unit should be replaced. **It is important that the ohmmeter is accurate. An accurate value cannot be obtained if the ohmmeter has an error of more than 1 ohm in 10. Test the ohmmeter with a known 10 ohm resistor.**

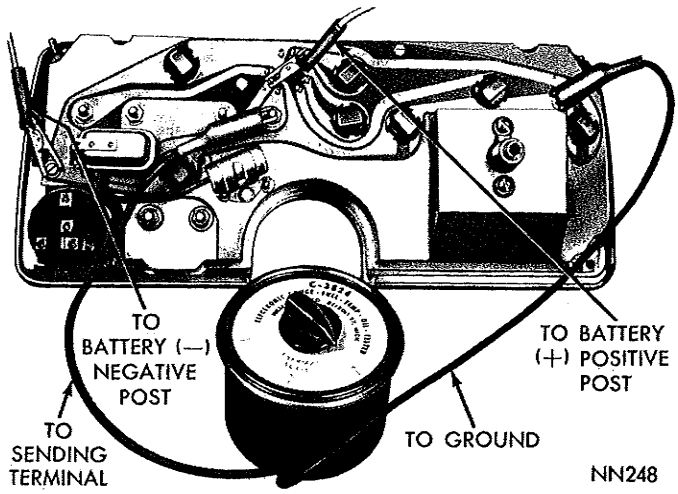


*Fig. 6—Testing Fuel Gauge—Valiant Models*

### *Fuel Gauge (Figs. 6, 7, 8 and 9)*

Place the instrument cluster on a padded service bench to protect the cluster finish.

The gauges in the instrument cluster can be tested with a fully charged 12 volt battery and Gauge Tester Tool C-3826.

To prevent a possible error that might result in burning out the gauges the following test procedures should be closely followed.

**CAUTION: A direct connection from a 12 volt battery to the gauges will burn them out. A short circuit to the printed circuitry will burn it out.**

(1) On all except Fury models, connect a jumper wire from ignition pin to the positive post of a test battery (Figs. 6, 7 and 8). For Fury models, connect jumper wire from "I" terminal of fuel gauge to positive post of test battery (Fig. 9).

(2) Connect a jumper wire from negative (—) post of battery to instrument cluster base (ground).

(3) Connect one lead from Tester Tool C-3826 to

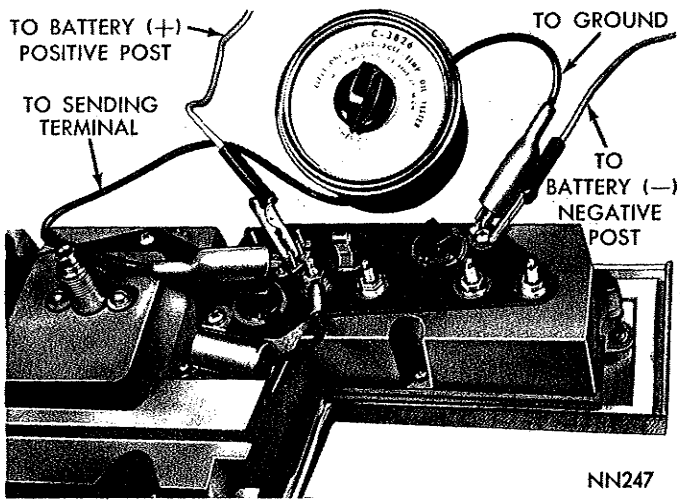


*Fig. 7—Testing Fuel Gauge—Barracuda Model*

MyMopar.com

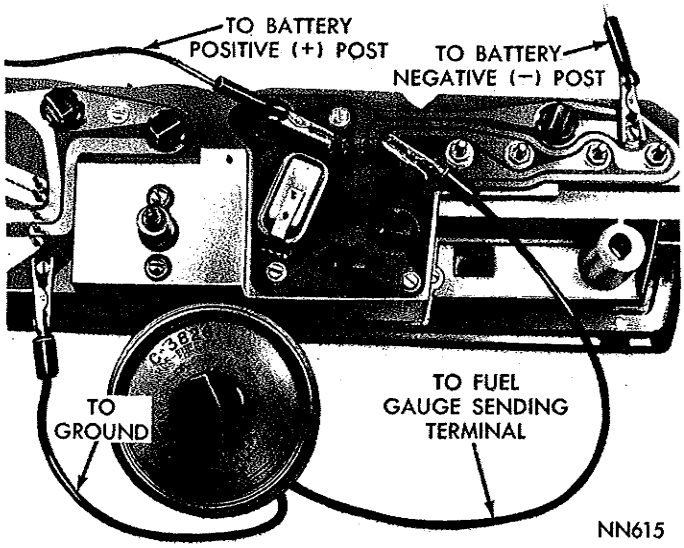


*Fig. 8—Testing Fuel Gauge—Belvedere and Satellite Models*

fuel gauge "S" terminal.

With gauge tester in **"L"** position, fuel gauge should show "E" or minus 3/32 inch. **The minus tolerance provides a small fuel reserve when the gauge is on "E" position.**

With the gauge tester on **"M,"** the fuel gauge should slowly advance to the ½ position. With the gauge tester on **"H"** the fuel gauge should show "F" plus or minus 3/32 inch. If the gauge does not perform as above, test for an open printed circuit board or replace the fuel gauge.

### *Temperature Gauge (Figs. 10, 11, 12 and 13)*

The temperature gauge is tested in the same manner as the fuel gauge with the exception that Tester C-3826 is connected to the temperature gauge "S" terminal.

With the gauge tester on **"L"** position, the temperature gauge should show "C" or cold. With the gauge tester on **"M"** position, the temperature gauge should show ½ of the operating scale of the gauge.

With the gauge tester on the **"H"** position, the temperature gauge tester should show "H." If the gauge does not respond to the above tests, test for an open printed circuit or replace the temperature gauge.

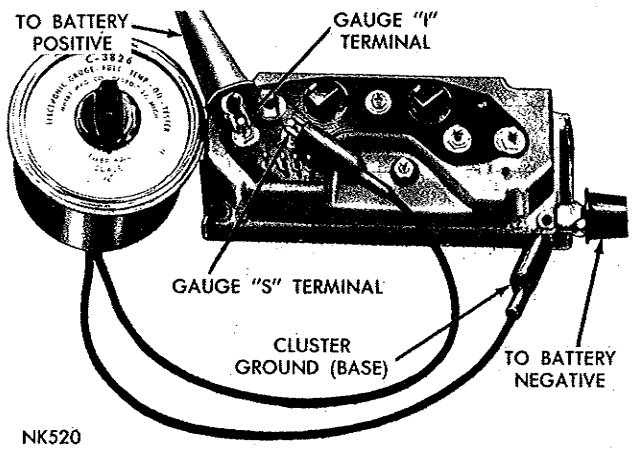


*Fig. 9—Testing Fuel Gauge—Fury Models*

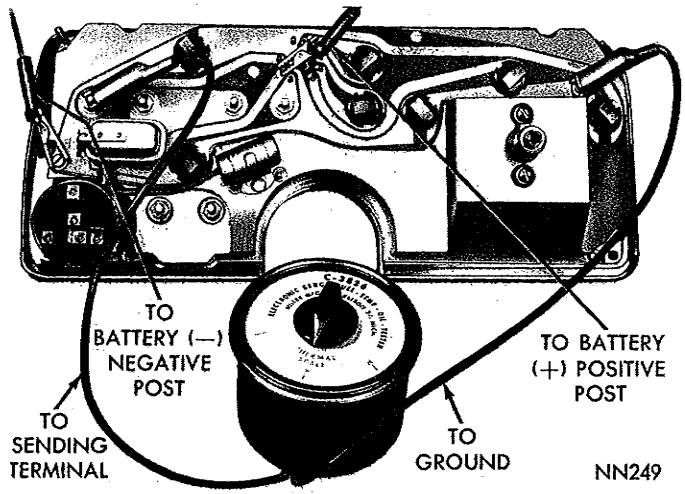


*Fig. 10—Testing Temperature Gauge—Valiant Models*

### *Testing Oil Gauge—Barracuda Models*

The oil gauge is tested in the same manner as the fuel and temperature gauges with the exception that Tester C-3826 is connected to the oil gauge sending terminal (Fig. 14).

With the gauge tester on "L" position the oil gauge should show "L" low. With the gauge tester on "M" position, the oil gauge should show ½ of the gauge scale. With the gauge tester on "H" position, the oil gauge should show "H" high. If the gauge does not respond to the above tests, inspect for an open printed circuit or replace the oil gauge.

## SWITCHES

### *Headlight Switches*

The switches on Valiant, Barracuda, Belvedere and

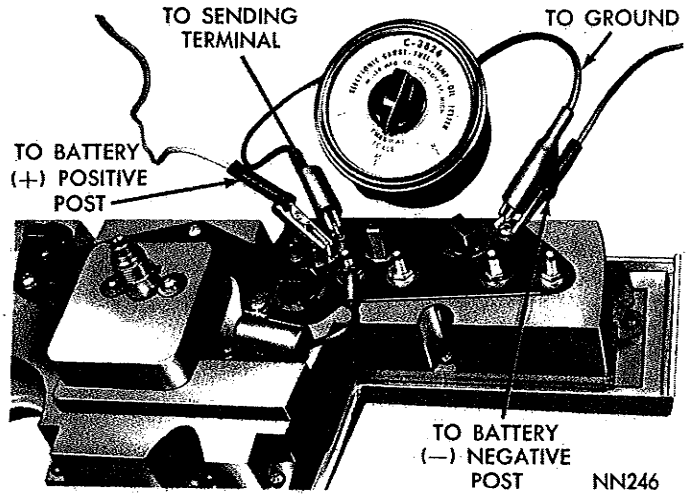


*Fig. 11—Testing Temperature Gauge—Barracuda Models*

MyMopar.com

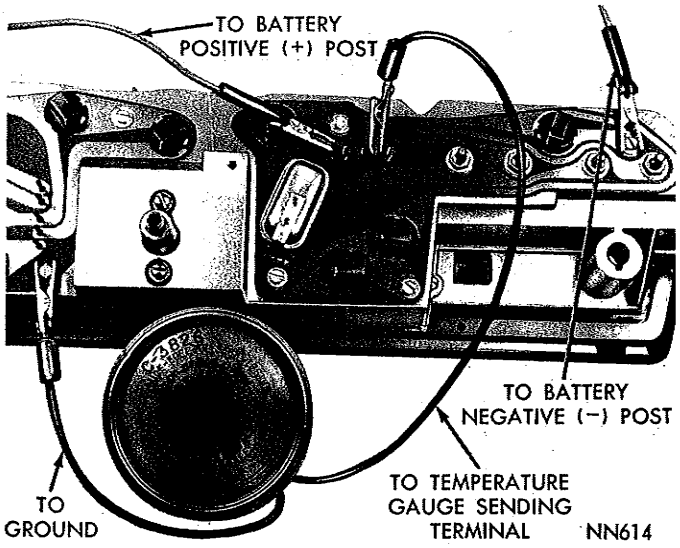


*Fig. 12—Testing Temperature Gauge—Belvedere and Satellite Models*

Satellite models are serviced from under the instrument panel by disconnecting the multiple connector, removing the knob and the bezel. On Fury models it is necessary to remove the instrument cluster—(See Instrument Cluster Removal) far enough from the panel to gain access to the multiple connector and the knob release button on the switch.

### Wiper Switch

These switches are serviced in the same manner as the headlight switches except that the knob is retained on the switch by a set screw.

### Ignition Switches

Valiant, Barracuda, and Fury switches are removed from under the panel after disconnecting the multiple connector from the back and removing the bezel on the panel with Tool C-3824.

In Belvedere and Satellite models it is necessary to remove the turn signal flasher before disconnecting the multiple connector. The bezel is then removed

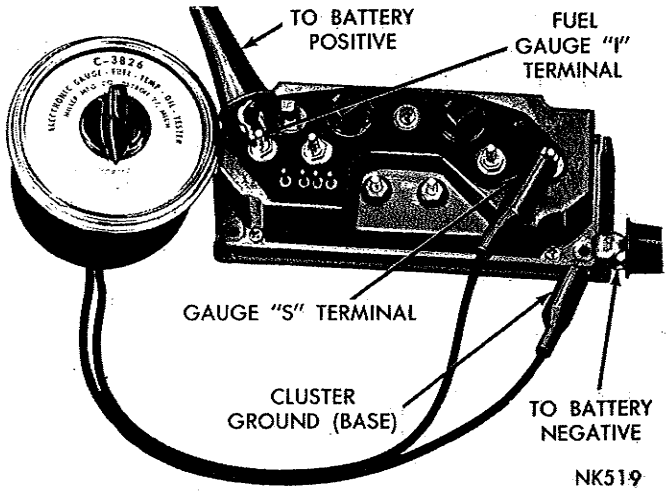


*Fig. 13—Testing Temperature Gauge—Fury Models*

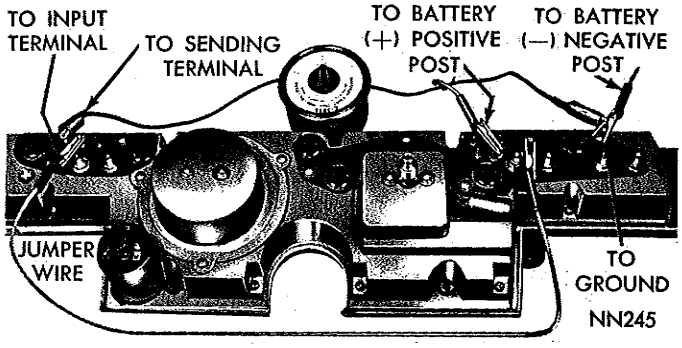


*Fig. 14—Testing Oil Gauge—Barracuda Model*

and the switch is dropped from under the panel.

### Accessory Switches (Convertible Top and Tail Gate Glass)

The Valiant, Satellite and Belvedere switches are removable from under the panel.

In the Fury models, a toggle type switch, mounted in a decorative bezel, is used. The mounting nut is recessed in the bezel. Use a deep thin-wall 9/16″ x 3/8″ drive socket to remove the nut.

A small amount of dum-dum on the lip of the socket will help in retaining the nut in the end of the socket during installation.

## HEATER OR AIR CONDITIONING CONTROLS

### Valiant Models

### Removal

(1) Disconnect battery ground cable.

(2) Remove radio. See "Radio Removal," Accessories Group 1.

(3) From behind instrument panel, remove the four heater trim bezel retaining nuts, cigar lighter receptacle and bezel.

(4) From front of instrument panel, remove the two control assembly retaining metal screws and pull down below panel to disconnect control cables, blower switch wires or vacuum connector if air conditioning equipped.

(5) Remove assembly for service.

**The blower switch is attached to the control assembly with one metal screw.**

### Installation

(1) From a position below instrument panel, connect and adjust control cables, blower switch wires or the vacuum connector if air conditioning equipped. See "Control Cable Adjustments," Accessories, Group 1.

(2) From under instrument panel, position assembly in panel opening and install the two metal screws

MyMopar.com

from front of panel.

(3) Install radio. See "Radio Installation," Accessories Group 1.

(4) Install heater trim bezel, cigar lighter receptacle and heater control knobs.

(5) Connect battery ground cable and test operation of radio and heater controls.

### Barracuda Models

#### Removal

(1) Disconnect battery ground cable.

(2) Remove radio. See "Radio Removal," Accessories Group 1.

(3) Remove heater control knobs, three trim bezel retaining screws and bezel.

(4) From front of instrument panel, remove the two control assembly retaining screws and pull down below panel to disconnect control cables, blower switch wires or vacuum connector if air conditioning equipped.

(5) Remove assembly for service.

**The blower switch is attached to the control assembly with one metal screw.**

#### Installation

(1) From a position below instrument panel, connect and adjust control cables, blower switch wires or the vacuum connector if air conditioning equipped. See "Control Cable Adjustments," Accessories, Group 1.

(2) From under instrument panel, position control assembly in panel opening and install the two metal screws from front of panel.

(3) Install radio. See "Radio Installation," Accessories, Group 1.

(4) Install heater trim bezel, with the three retaining screws and heater control knobs.

(5) Connect battery ground cable and test operation of heater controls and radio.

### Belvedere and Satellite Models

#### Removal

(1) Disconnect battery ground cable and tape the top of steering column to prevent scratching of paint.

(2) Remove control knobs and the two screws from control bezel.

(3) Remove steering column cover, column clamp and disconnect speedometer cable.

(4) Remove the six screws from cluster bezel and pull cluster out far enough to disconnect control cable clamps, blower switch wires and vacuum hose connector if air conditioning equipped.

(5) Remove two screws from control mounting plate to cluster and remove control through back of cluster. The vacuum switch is separated from slide control plate by removing two self tapping screws.

#### Installation

(1) Install temperature control assembly through back of panel and connect and adjust cables, switch wires and the vacuum connector if air conditioning equipped. See "Control Cable Adjustment," Accessories, Group 1. Secure assembly to cluster, with the two mounting screws.

(2) Install cluster in panel and secure steering column clamp with the two nuts finger tight and align column. See "Steering Column Alignment" in Transmissions Group 21.

(3) Install the steering column cover, the temperature control knob and the bezel.

(4) Remove tape from steering column, connect battery ground cable and test operation of the controls.

### Fury Models

#### Removal

(1) Disconnect battery ground cable.

(2) Remove radio control knobs, mounting nuts, heater control knobs, radio bezel and clock (if so equipped).

(3) Remove ash receiver and housing.

(4) Remove the three metal screws retaining switch assembly to panel.

(5) Lower control assembly to ash receiver opening and disconnect control cables, blower switch wire connector and vacuum connector if air conditioning equipped. Remove control through ash receiver opening.

#### Installation

(1) Position control assembly in ash receiver opening to connect and adjust control cables. See "Control Cable Adjustment," Accessories, Group 1. Connect blower switch connector and vacuum connector if air conditioning equipped.

(2) Reaching through ash receiver opening, position control assembly in panel opening and install with the metal screws.

(3) Install ash receiver and housing, radio bezel, radio mounting nuts and control knobs.

(4) Install heater control knobs and clock if so equipped.

(5) Connect battery ground cable and test operation of controls.

## TURN SIGNAL SYSTEM

### GENERAL INFORMATION

A Tilt Steering Column is offered as optional equipment on the Fury models only. The turn signal switch is mounted on the lower end of the column near the bulkhead and is actuated by a cable controlled by a canceling switch mounted under the steering wheel. A lobe mounted to the steering wheel contacts one of two canceling cams on the canceling switch when the wheel is turned.

The non-tilt steering column utilizes a turn signal switch and canceling cam mounted directly below the

MyMopar.com

steering wheel and horn contact switch. A lobe mounted directly to the underside of the steering wheel actuates the canceling cam which deactivates the turn signal switch mounted to the canceling cam assembly.

Two turn signal indicator lights are mounted in the instrument clusters of all models (Fig. 1) except on Valiant and Barracuda models. Valiant uses a single indicator light in the instrument cluster (Fig. 2). The Barracuda model uses, as standard equipment, fender mounted indicators (Fig. 1). Because fender mounted indicators are visible from the driver's position, the indicators are omitted from the instrument cluster.

The turn signal flasher is a plug in type mounted to the right of the steering column, under the instrument panel in a bracket mounted on the ash receiver housing.

## SERVICE DIAGNOSIS

| Condition | Possible Cause | Correction |
|---|---|---|
| **NON-TILT STEERING COLUMN** | | |
| **EXTERNAL LIGHTS OPERATE NORMALLY, NO INDICATIONS ON INSTRUMENT CLUSTER** | (a) Faulty pilot bulb in instrument cluster. | (a) Replace bulb. |
| **SYSTEM DOES NOT FLASH** | (a) Faulty flasher unit.<br>(b) Faulty external bulb.<br>(c) Faulty contact in switch. | (a) Replace flasher.<br>(b) Replace faulty bulb.<br>(c) Replace switch. |
| **SYSTEM DOES NOT CANCEL AFTER COMPLETION OF TURN** | (a) Broken or loose cancelling finger.<br>(b) Improperly aligned cancelling finger.<br>(c) Broken or faulty switch. | (a) Replace cancelling finger.<br>(b) Align cancelling finger properly.<br>(c) Replace switch. |
| **ENTIRE SYSTEM DOES NOT OPERATE** | (a) Open circuit in feed wire to switch.<br>(b) Faulty fuse.<br>(c) Faulty flasher unit. | (a) Check wiring circuits. Refer to "Wiring Diagrams."<br>(b) Replace fuse.<br>(c) Replace flasher. |
| **PILOT LIGHT ILLUMINATES BRIGHTLY, EXTERNAL LIGHT GLOWS DIMLY WITH NO FLASH** | (a) Loose or corroded external light ground connection. | (a) Clean and tighten ground connection. |
| **TILT STEERING COLUMN** | | |
| **TURN SIGNAL NOT CANCELLING FROM EITHER TURN POSITION** | (a) Clamps at either end of the bowden cable are broken, loose or pulled off.<br>(b) Bowden cable wire loops uncoiled.<br>(c) Override spring on actuator yoke is bent allowing the plastic trigger to pass over top and possibly bind on spring.<br>(d) Trigger spring is broken or unattached.<br>(e) Channel on underside of the turn signal yoke is not engaging the ball end of bellcrank.<br>(f) Turn signal binding preventing cancellation. Wire ring on yoke pilot installed with open ends out of position.<br>(g) Dimples in actuator yoke worn allowing the override spring to pivot out of position.<br>(h) Signal switch mounting legs bent. | (a) Install a new bowden cable assembly.<br>(b) Install a new bowden cable assembly.<br>(c) Install new yoke assembly.<br>(d) Install new trigger spring or attach trigger spring.<br>(e) Lift yoke and reposition on bellcrank.<br>(f) Reinstall with open ends in hole for the signal switch lever.<br>(g) Replace yoke assembly.<br>(h) Install new switch. |
| **TURN SIGNAL NOT CANCELLING IN THE** | (a) Detent spring deformed so switch | (a) Install a new detent spring. |

MyMopar.com

| Condition | Possible Cause | Correction |
|---|---|---|
| EXTREME DOWN POSITION OF THE TILT WHEEL | will not remain indexed. | |
| TURN SIGNAL NOT OPERATING IN SOME OF THE TILT POSITIONS | (a) Turn signal switch is mounted incorrectly on jacket tube. | (a) Readjust signal switch. |

## SERVICE PROCEDURES

### NON-TILT STEERING COLUMN

#### *Removal*

(1) Disconnect the battery ground cable.

(2) Remove horn ring on Belvedere, Satellite and Fury models by placing steering wheel in a straight ahead position. Lift horn ring at seven o'clock position and turn counterclockwise ¼ turn.

For Valiant models, pry cap off of horn button with a screw driver using care to avoid damaging cap.

(3) Disconnect horn wire at horn switch.

(4) Remove the 3 screws and insulators attaching horn ring retainer and switch to steering column. Remove retainer and switch.

(5) Loosen steering wheel nut several turns and install Steering Wheel Puller Tool C-3428. Loosen steering wheel first. Then remove steering wheel nut and steering wheel.

(6) Disconnect switch wiring multiple connector at steering column jacket. Remove each terminal from connector, tying them together with a piece of string or fine wire.

(7) Remove screws attaching turn signal switch to steering column and remove switch, and switch wires from column. Leave string or wire in column as an aid to installation.

#### *Installation*

(1) Attach string or wire (that was left in steering column jacket tube during removal) to turn signal switch wiring, and carefully pull string or wire down through column jacket tube until turn signal switch is positioned in steering column jacket tube. Install attaching screws and connect all wire connections.

(2) Install turn signal switch lever.

(3) Install steering wheel and steering wheel nut. Tighten to 24 foot-pounds. Test operation of cancelling lever.

(4) Install horn switch, horn ring retainer, insulators and attaching screws. Connect horn wire at horn switch.

(5) For Belvedere, Satellite and Fury models, install horn button or ring by turning ¼ turn clockwise to lock horn button to retainer. On Valiant, Barracuda models, press the cap onto horn button.

(6) Connect battery ground cable.

### TILT STEERING COLUMN SWITCH

#### *Removal—All Models*

(1) Remove the two hex head self tapping screws from switch mounting bracket at lower end of steering column.

(2) Remove screw attaching cable clip to switch and disconnect multiple connector.

#### *Installation—All Models*

(1) Attach coil end of cable to switch post with wire next to switch. Install cable clip and screw.

(2) Place steering column in "Down" position, turn signal handle and switch in cancel position.

(3) Connect multiple connector and secure switch to column making sure to center two screws in bracket slots.

### CONTROL CABLE

#### *Removal*

(1) Remove steering wheel assembly and steering column cover.

(2) Remove turn signal handle and canceling cam spring. Using a pair of long needle nose pliers, gently pull cam assembly from pivot socket.

(3) Remove cable clip and cable from switch.

(4) Remove cable clip screw and slide coil end off the upper cable lever. Pull cable up far enough to attach a fine flexible wire to cable to aid in installing the cable.

(5) Place gear selector in manual Low and the steering column in the straight position. Remove cable from bottom of column, leaving wire in column.

#### *Installation—All Models*

(1) Position steering column in straight position and gear selector in manual Low.

(2) Attach flexible wire to "L" shaped cable clamp and feed cable through bottom of column while pulling on wire from top of column.

(3) Remove wire from cable clip, position coil end on upper cable lever with coil wire facing away from lever and install cable clip.

(4) Install canceling cam assembly, making sure to engage round head of upper cable lever head with "U" shaped retainer on underside of assembly.

(5) Install cam retaining spring and turn signal lever.

MyMopar.com

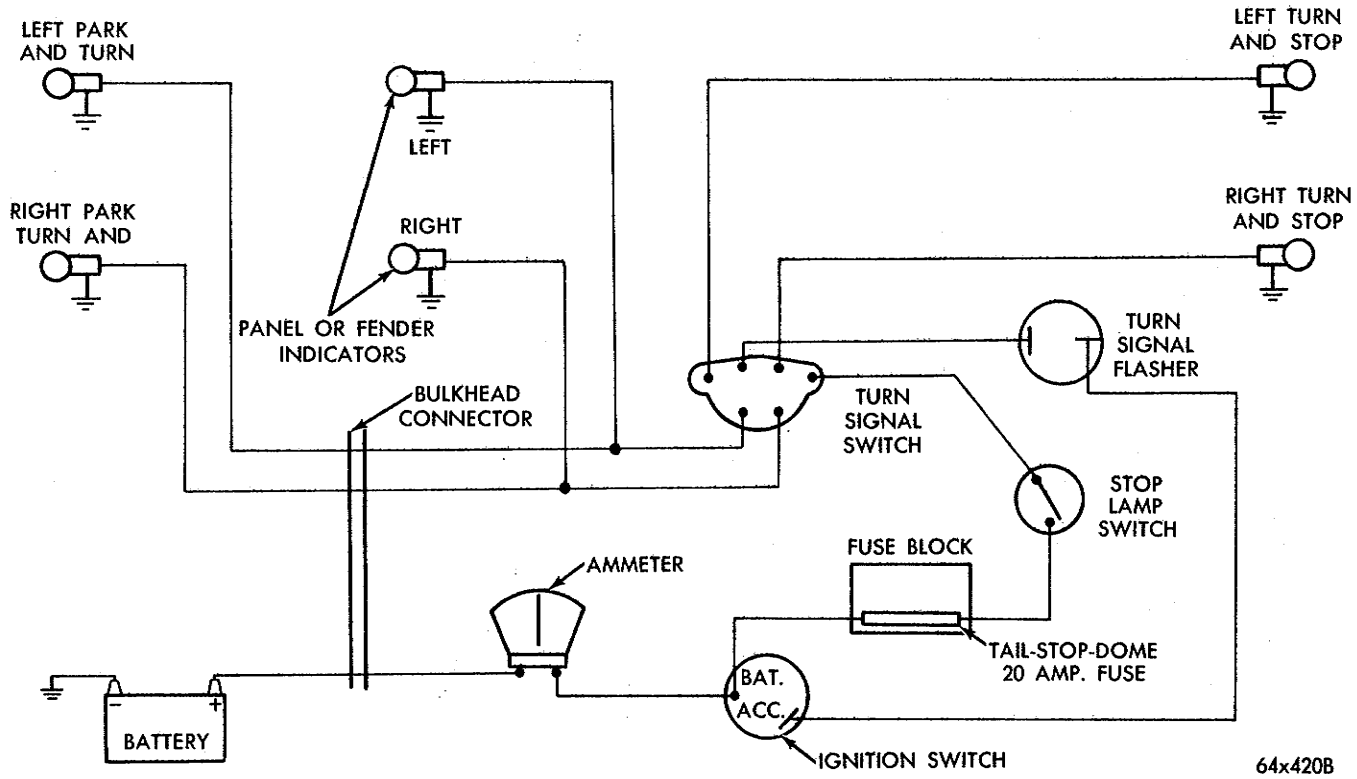


***Fig. 1—Turn Signal Wiring—All Except Valiant Models***

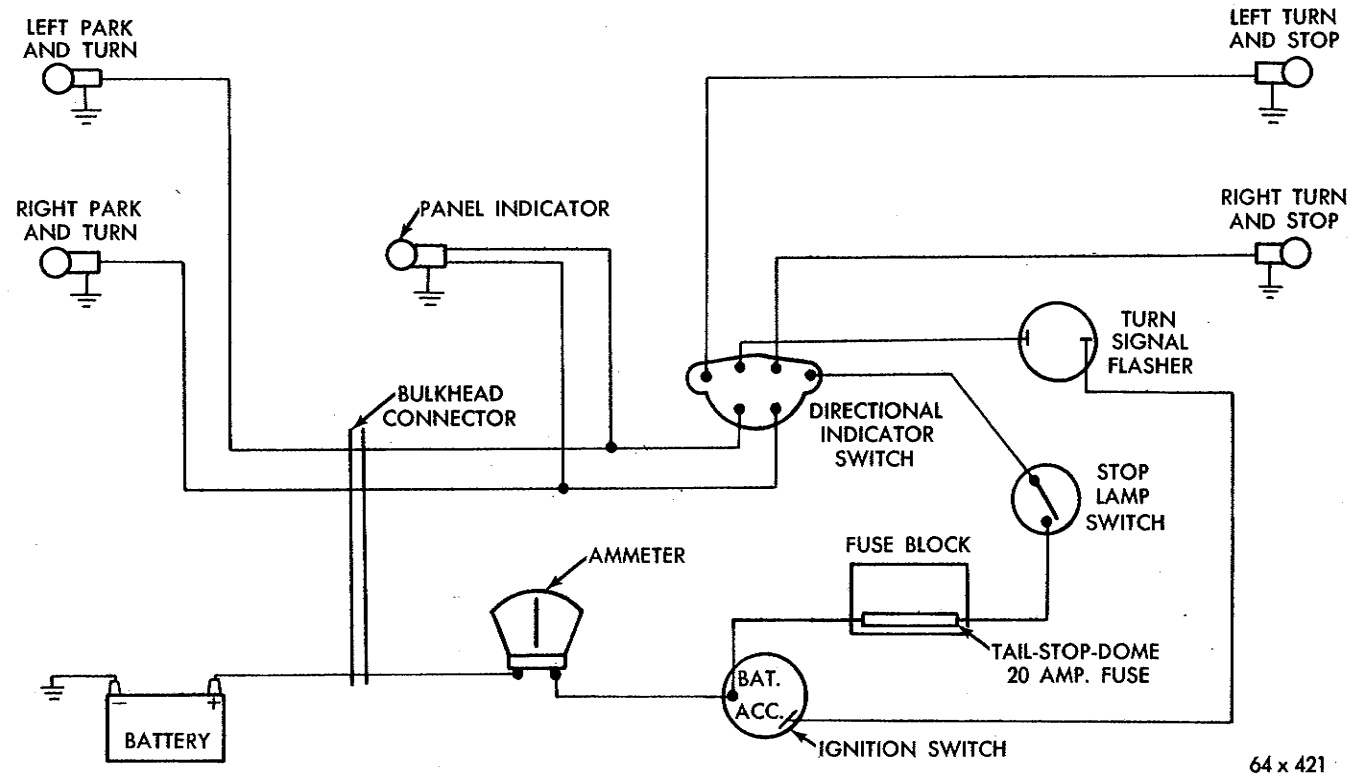


***Fig. 2—Turn Signal Wiring—Valiant Models***

MyMopar.com

(6) Place steering column in "Down" position and attach coil end to switch post with wire next to switch. Install cable clip and screw.

(7) Place turn signal lever and switch in neutral position and secure switch to column. Be sure to center mounting screws in slots.

**Do not distort the cable in any way.**

(8) Install steering wheel assembly and steering column cover.

# WINDSHIELD WIPERS

## INDEX


| | Page | | Page |
|---|---|---|---|
| General Information | 80 | Wiper Linkage | 85 |
| Lubrication | 83 | Wiper Motors | 84 |
| Service Diagnosis | 80 | Wiper Pivots | 87 |
| Tests and Adjustments | 81 | Wiper Switch | 83 |


## GENERAL INFORMATION

The wiper motor is connected to the wiper switch and from the wiper switch "B" terminal to the "ACC," accessory, terminal of the ignition switch so the wiper motor can be actuated only when the ignition switch is turned to the right or left positions. The wiper circuitry is protected by a circuit breaker that is built into the wiper switch.

The variable speed wiper system has a depressed parking feature which is accomplished by reversing the direction of the wiper motor and the use of a parking cam on the motor crank pin. When the wiper switch is turned "OFF," the motor direction is reversed and at the same time the parking cam rotates 180 degrees, lengthening the drive link slightly to park the wiper blades in a depressed position. The drive link shortens when the motor runs in the wipe direction (Figs. 1, 2 and 3).

## SERVICE DIAGNOSIS

| Condition | Possible Cause | Correction |
|---|---|---|
| **WIPER FAILS TO OPERATE** | (a) Binding Linkage. | (a) Relieve binding condition. |
| | (b) Faulty instrument panel switch. | (b) Test Switch. See "Wiper Switch (Instrument Panel Mounted)." |
| | (c) Linkage disconnected. | (c) Repair as necessary. |
| | (d) Faulty motor. | (d) Test motor. See "Wiper Motor Bench Testing." |
| | (e) Open or grounded wiring. | (e) Test wiring for continuity. Repair as necessary. |
| **WIPER BLADES NOT PARKING PROPERLY** | (a) Arm set at incorrect position. | (a) Adjust arm. See "Wiper Arm Adjustment." |
| | (b) Motor park switch timing incorrect. | (b) Time park switch. See "Wiper Motor Park Switch Timing." |
| | (c) Broken link spring. (Variable Speed.) | (c) Replace Spring. See "Wiper Link Assembly." |
| | (d) Parking spring release not engaging stop on linkage. (Variable Speed.) | (d) Inspect "Wiper Link Assembly." |
| **BLADES SLAP AGAINST WINDSHIELD MOULDINGS** | (a) Improperly adjusted wiper arm. | (a) See "Wiper Arm Adjustment." |
| | (b) Looseness of the motor crank or other drive parts. | (b) Replace the part. |
| **BLADES CHATTER** | (a) Twisted arm holds blade at wrong angle to glass. | (a) Replace wiper arm. Do not attempt to straighten bent or twisted arm. |
| | (b) Bent or damaged blades. | (b) Replace blades. |
| | (c) Foreign substances such as body polish on glass. | (c) Clean the glass. |
| **MOTOR WILL NOT STOP WHEN INSTRUMENT PANEL SWITCH IS TURNED "OFF"** | (a) Motor park switch failure in the "closed" position. | (a) Repair or replace motor park switch. |

MyMopar.com

| Condition | Possible Cause | Correction |
|---|---|---|
| **MOTOR STOPS IN ANY POSITION WHEN INSTRUMENT PANEL SWITCH IS TURNED "OFF"** | (a) Motor park switch failure in the open position. | (a) Repair or replace motor park switch. |
| | (b) Open parking circuit. | (b) Test continuity of blue wiring circuit and correct as necessary. |
| | (c) Open field circuit. | (c) Test continuity of yellow wiring circuit and correct as necessary. |
| **NO SPEED CONTROL (VARIABLE SPEED)** | (a) Open circuit in yellow wiring. | (a) Test continuity and correct as necessary. |
| | (b) Defective control switch. | (b) Replace switch. |

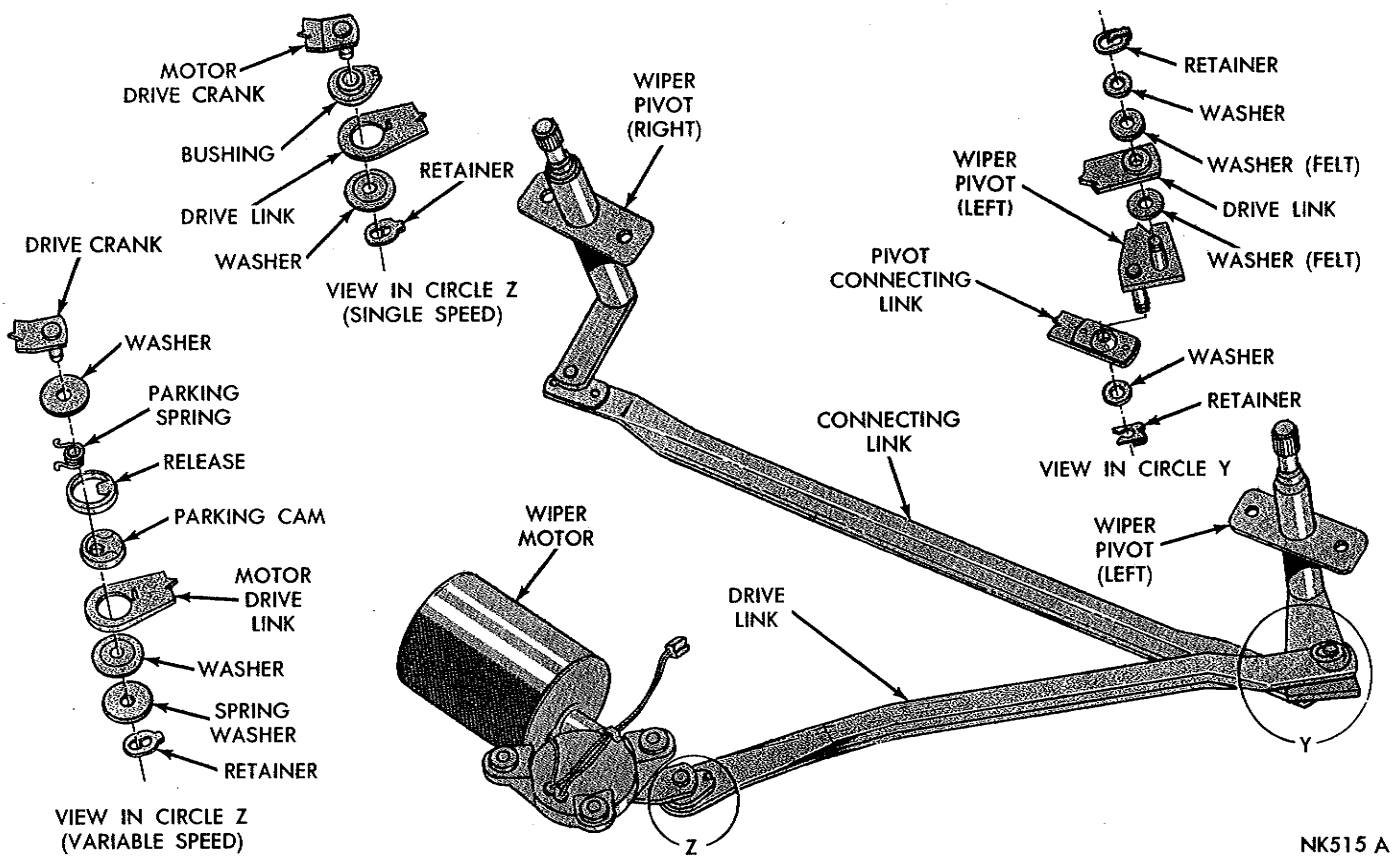


***Fig. 1—Wiper System—Valiant and Barracuda Models***

## SERVICE PROCEDURES

### TESTS AND ADJUSTMENTS

#### *Wiper Arm Adjustment—Variable Speed*

To determine if an adjustment is required, apply a constant **upward** force of 50 ounces for Belvedere, Satellite and Fury models and 30 ounces for Valiant and Barracuda models, parallel to the windshield glass at the end of the wiper arm (where the blade is attached to the arm). With the force applied, pull the wiper blade away from the windshield glass once or twice to prevent glass friction from affecting upward movement of the wiper arm and blade. With the force applied, the clearance between the tip of the wiper blade and the windshield lower moulding should be as follows:

| Models | Clearance in Inches Between Tip of Blade and Windshield Moulding | |
|---|---|---|
| | Right | Left |
| Valiant—Barracuda | ¼-1¾ | ¼-1¾ |
| Belvedere—Satellite | ¾-2¾ | ¼-2¼ |
| Fury | 1-3 | ¼-2¼ |

If the clearance is not in the specified range, use Tool C-3982 and reposition the wiper arm and blade assembly (Fig. 4).

MyMopar.com

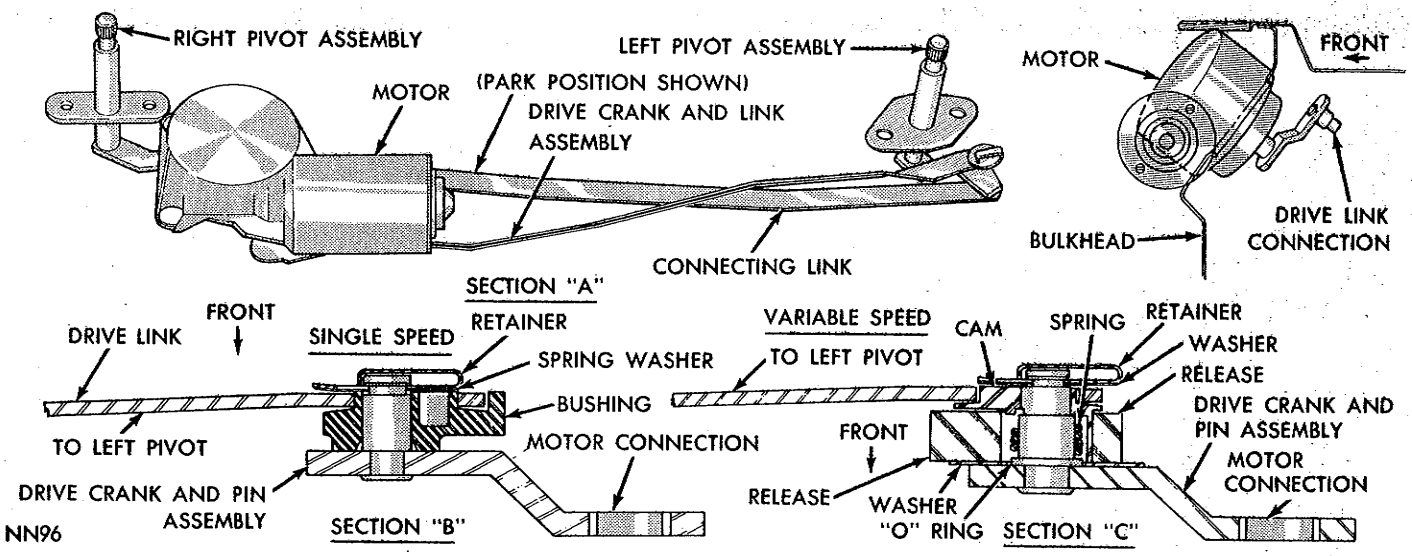


***Fig. 2—Wiper System—Belvedere and Satellite Models***

### *Single Speed*

To determine if an adjustment is required apply a constant **downward** force of 25 ounces, parallel to the windshield glass, at the end of the wiper arm (where the wiper blade is attached to the arm). With the 25 ounce force applied pull the wiper blade away from the windshield glass once or twice to prevent glass friction from affecting downward movement of the wiper arm and blade. With this force applied the clearance between the tip of the wiper blade and the windshield moulding should be as follows:

| Models | Clearance in Inches Between Tip of Blade and Windshield Moulding | |
|---|---|---|
| | Right | Left |
| Valiant—Barracuda | 1¼-3 | ¼-2 |
| Belvedere—Satellite and Fury | 1-3 | ¼-2¼ |

If the clearance is not in the specified range use Tool C-3982 and reposition the wiper arm and blade assembly (Fig. 4).

**CAUTION: The use of a screwdriver or other prying tool to remove an arm may distort it in a manner that will allow it to come off the pivot shaft in the future, regardless of how carefully it is reinstalled. NEVER under any circumstances push or bend the spring clip in the base of the arm in an attempt to release the arm. This clip is self-releasing.**

### *Wiper Motor Park Switch Timing*

The timing of wiper motor park switch must be:

(a) Late enough that wiper arms come to rest at extreme lower limit of travel on dry glass.

(b) Early enough that wiper arms do not raise appreciably beyond lower limit of travel on fully wet glass.

Adjust timing of park switch on wiper motor to provide "shut off" at lowest point of wiper blade travel under both wet and dry glass conditions.

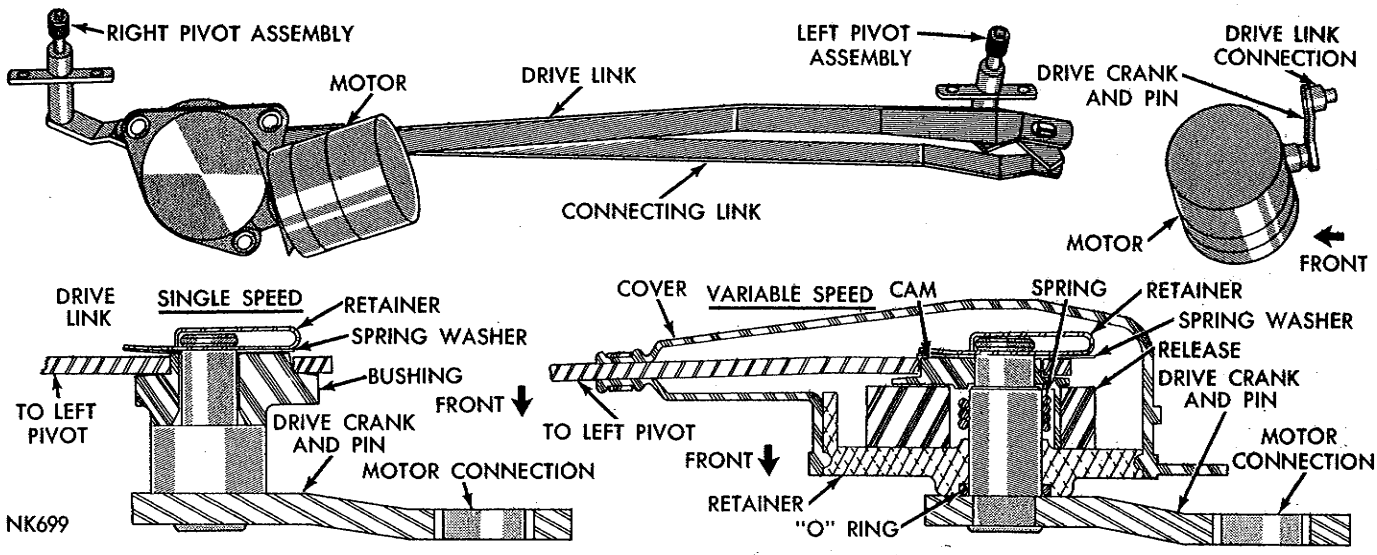


***Fig. 3—Wiper System—Fury Models***

MyMopar.com

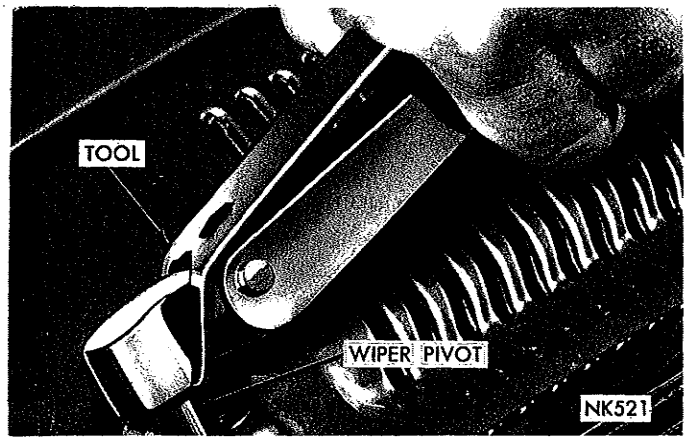


*Fig. 4—Removing Wiper Arm and Blade Assembly*

When adjusting the timing of the variable speed park switch, note that the variable speed motor rotates in reverse at the time the park switch opens. "Early" and "Late" directions are therefore opposite to single speed motors.

### *Wiper Parking Operation Test—Variable Speed*

(1) Turn instrument panel wiper switch to "on" position and allow wiper system to run through several cycles of operation.

(2) Very slightly, after wiper blades reach top of wipe pattern, turn wiper switch to **OFF** to cause blades to park in a one-half (½) cycle of wiper motor operation.

If the blades do not park in the desired ½ cycle but require 1½ cycles to park, the procedure of going through the switching operation must be repeated as follows:

(a) Turn switch to "ON" position and allow wiper system to operate for a few cycles.

(b) Turn switch to "OFF" position, only this time allow timing of operating switch to occur at a position in respect to wiper blade travel slightly later than first operation. Again, note cycle requirement to reach park.

Having parked wiper system in ½ cycle of motor operation note whether wiper blades have traveled well below normal wipe pattern. If they have not, replacement of parking cam, spring and spring trip is indicated. If they have, but have not met requirements for proper park position, a wiper arm adjustment is required.

## WIPER SYSTEM LUBRICATION

Should it be necessary to service the wiper system for any reason, the parking spring in the **variable speed** parking mechanism should be lubricated with Led-Plate, Part No. 2275437, or equivalent lubricant containing powdered lead. Apply the Led-Plate to inside coils of spring first and to the outside of the spring coils after installation of the spring.

The single speed crank arm pin and the pivot pins for either variable or single speed systems should be lubricated with Automotive Multi-Purpose Lubricant, NLGI 2.

Should the wiper motor gear be disassembled, it should be repacked with Automotive Multi-Purpose Lubricant NLGI 2. Use of lubricants other than those specified above will result in noisy operation, rapid wear of components and premature failure of the system.

## END PLAY ADJUSTMENT

To adjust the armature shaft end play, turn the adjustment screw in until it bottoms and back-off ⅛ turn (Fig. 5). This adjustment can be made without removing the wiper motor from the vehicle on Belvedere, Satellite and Fury models.

## WIPER SWITCH

### *Variable Speed*

The switch contains a rheostat which provides a means of controlling the amount of current which flows to the motor. The switch is designed to provide a circuit to the motor to reverse the current to the field winding which in turn reverses the direction of the armature. A circuit breaker, built into the switch, protects the wiper motor circuitry.

To test the switch, disconnect the wiring to the switch and remove the switch from the instrument panel. For removal and installation of the wiper switch, see "Instruments and Indicators."

Using a continuity tester or an ohmmeter, test for continuity, no resistance, between the contact terminals of the switch as shown in the following chart. For test purposes the "Park" position is when the switch is in the "Off" position. The "Low" position is when the switch is just turned "On". The "High" position is when the switch knob is rotated to the high or maximum wiper speed position. In the test chart the refer-

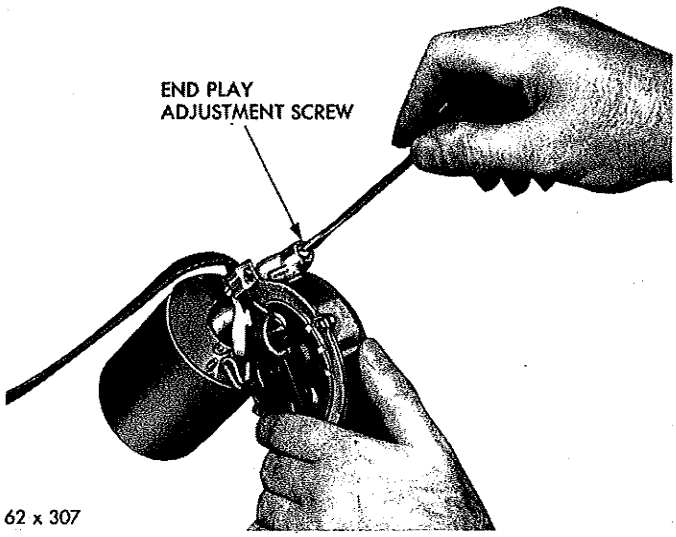


*Fig. 5—End Play Adjustment*

MyMopar.com

ence "Ground" means to attach one lead of the continuity tester or ohmmeter to the case of the switch. The bench test of the switch does not require the use of a 12 volt battery.

**VARIABLE SPEED SWITCH CONTINUITY CHART**

| Off | Low | High |
|---|---|---|
| B to B/U. | B to B/U. | B to B/U. |
| B/U to P. | B/U to A. | B/U to A. |
| A to F2. | A to F1. | * A through the |
| F1 to Ground. | F2 to Ground. | rheostat to F1. |
| | P-open. | F2 to ground. |
| | | P-open. |

*As the switch knob is rotated the resistance shown on the ohmmeter should vary from a high reading to a low reading in a smooth rate of change or if a continuity tester or ohmmeter to the case of the switch. lamp should vary from bright to dim.

### *Single Speed*

The switch contains a built-in circuit breaker to protect the motor circuitry and is serviced only as an assembly. To test the switch, refer to the proper wiring diagram, disconnect the lead wires and remove the switch from the instrument panel. Connect a test lamp between "B" terminal of the switch and negative battery post. Connect the positive battery terminal to the "P" terminal of the post. Light should remain lighted in either "ON" or "OFF' position. Failure to light indicates a faulty circuit breaker.

Connect the positive battery lead to the "R" terminal of the switch. The lamp should light when the switch is turned "ON" and go out when turned "OFF."

## WIPER MOTOR

### *Belvedere—Satellite Models*

### *Removal*

(1) Disconnect battery ground cable.

(2) Disconnect wiper motor multiple connector from engine side of bulkhead.

(3) Remove the three wiper motor mounting nuts and pull motor out far enough to gain access to drive crank.

(4) Rotate crank till drive link retainer is accessible.

(5) Using a short screw driver, carefully pry lip of retainer over drive link pivot pin and remove retainer and spring washer.

(6) Remove motor to work bench for service.

### *Installation*

(1) Position wiper motor so drive crank extends into wiper motor opening in bulkhead.

(2) Connect drive link to drive crank and install spring washer and retainer. For variable speed motors, position flat washer, trip spring, release, parking cam and retainer as outlined in "Wiper Link-Assembly." **If the retainer was distorted in removal, it should be replaced.**

(3) Rotate drive crank till motor mounting bolt holes align with studs and install three nuts.

(4) Couple wire harness multiple connector to bulkhead connector.

(5) Connect battery ground cable and test operation of wipers.

### *Valiant-Barracuda Models*

### *Removal*

(1) Disconnect wiper link at wiper motor. For variable speed motors note position of spring trip.

(2) Disconnect wiper motor lead wires at wiper motor.

(3) Remove the three nuts attaching the wiper motor to wiper motor mounting bracket assembly and pull motor from mounting studs and out from underneath instrument panel.

### *Installation*

(1) Position mounting bracket and install three mounting nuts. Tighten mounting nuts securely making certain motor ground strap is in place.

(2) Connect lead wires to the wiper motor at wiper motor.

(3) Connect wiper link at wiper motor and install spring washer retaining clip. For variable speed motors position spring trip as outlined in the "Wiper Link-Assembly."

### *Fury Models*

### *Removal*

(1) Using Tool C-3982, remove wiper arm and blade assemblies (Fig. 4).

(2) Remove windshield lower moulding.

(3) Remove cowl grille panel.

(4) Remove drive crank retaining nut and drive crank. Disconnect wiring to motor.

(5) Remove three nuts motor to dash panel and remove motor.

### *Installation*

(1) Position motor on the three studs on dash panel. Make certain rubber gasket, between motor and dash panel, is properly positioned.

(2) Install the three nuts that mount motor to dash panel and connect wiring to motor. Make sure ground strap is screwed to switch plate under one nut.

(3) Position drive crank on motor and install nut. Tighten to 200 inch-pounds.

(4) Install cowl grille panel.

(5) Install windshield lower moulding.

(6) Using Tool C-3982, install and adjust wiper arm and blade assemblies.

## WIPER MOTOR

### *Disassembly*

(1) Remove spring retaining clip and washers on motor output shaft, noting sequence of removal of

MyMopar.com

washers.

(2) Remove switch and cover plate.

(3) Remove gear and shaft assembly.

(4) Remove end head through bolts and pull off end head using care to avoid damaging lead wire to brush holder on variable speed motors.

(5) Remove armature using care to keep commutator free of fingerprints and oil.

### Inspection

(1) Thoroughly inspect motor parts for wear, corrosion or damage.

(2) Clean armature commutator with 00 or 000 sandpaper. If commutator is worn excessively, wiper motor will have to be replaced.

(3) Replace worn or oil soaked brushes.

(4) Inspect gear for worn or broken teeth and replace gears showing damage or excessive wear.

### Assembly

(1) Insert armature into motor assembly.

(2) Install end head and end head through bolts using care to avoid damaging lead wire to brush holder on variable speed motors.

(3) Install gear and shaft assembly.

(4) Install washers on motor output shaft. Make certain washers are installed in the proper order, and install spring retaining clip.

(5) Replace gasket under park switch cover.

(6) Install switch and cover plate.

## WIPER MOTOR BENCH TESTING

### Variable Speed—(Valiant and Barracuda Models)

(1) Connect a jumper wire between wiper motor yellow wire and wiper motor ground strap. Connect another jumper wire between battery ground terminal and wiper motor ground strap. Connect another jumper wire between wiper motor black and red wires and battery positive terminal. The wiper motor should run continuously in wipe direction.

(2) Connect a jumper wire between wiper motor blue and battery positive terminal. Connect the yellow and black wires together. Connect another jumper wire between wiper motor red wire and wiper motor ground strap. Connect another jumper wire between battery ground terminal and wiper motor ground strap. The wiper motor should run in reverse and stop at park position.

### Single Speed

(1) Connect a jumper wire between battery ground terminal and wiper motor ground strap. Connect another jumper wire between black wire of wiper motor and battery positive terminal. The motor should run continuously.

(2) Connect a jumper wire between battery ground post and wiper motor ground strap. Connect another jumper wire between blue wire of wiper motor and red wire of wiper motor. The wiper motor should "park."

### Variable Speed—(Belvedere, Satellite and Fury Models)

(1) Connect a jumper wire between wiper motor green wire and wiper motor ground strap. Connect another jumper wire between battery negative terminal and wiper motor ground strap. Connect another jumper wire between wiper motor red and brown wires and battery positive terminal. The wiper motor should run continuously in wipe direction.

(2) Connect a jumper wire between wiper motor blue wire and battery positive terminal. Connect green to brown wire. Connect another jumper between wiper motor red wire and ground strap. Connect a jumper from ground strap to battery negative terminal. The motor should run in reverse and stop at park position.

### Single Speed—(Belvedere, Satellite and Fury Models)

(1) Connect a jumper wire between battery negative terminal and wiper motor ground strap. Connect another jumper wire between brown wire of wiper motor and battery positive terminal. The motor should run continuously.

(2) Connect a jumper wire between battery negative terminal and wiper motor ground strap. Connect another jumper wire between red and brown wires. Connect blue wire to battery positive terminal. The wiper motor should park.

## WIPER LINKS

### Variable Speed— (Valiant, Barracuda Models) Removal

(1) Remove connecting link retaining clips and washers from pivot pins.

(2) Remove connecting link.

(3) Remove drive link retainer clip and washers from left pivot pin.

(4) Remove retainer and washer from motor drive crank pin.

(5) Remove drive link.

(6) If variable speed, cam, release, parking spring and washer can be removed for examination, lubrication, or replacement at this point. (The parking spring is removed by spreading the ends.)

### Installation

(1) Install flat washer on motor crank arm pin.

(2) Apply Led-Plate, MS 2770 Part #2275437 or equivalent lubricant containing powdered lead, to inner and outer surfaces of parking spring, spread spring open and install on motor crank arm pin.

(3) Install spring release with letter "P" away from motor crank arm.

MyMopar.com

(4) Install plastic parking cam.

(5) Install drive link on motor crank arm pin making sure parking cam is seated correctly in the opening in drive link. Install convex washer and concave spring washer.

(6) Install retainer on end of motor crank arm pin (Fig. 6).

### *Single Speed—(Valiant, Barracuda Models)*

### *Removal*

(1) From under instrument panel, remove retaining clip and cone washer from pivot arm pins.

(2) Remove link and pin from motor crank.

(3) Withdraw assembly from under instrument panel and remove drive link and bushing.

### *Installation*

(1) Place bushing in end of wiper drive link with metal ear of drive link into keying slot.

(2) Install link and bushing on motor crank pin.

(3) Install cone washer and retaining clip.

### *(Belvedere—Satellite Models)*

### *Removal*

**If air conditioning equipped, remove glove box for access to right pivot retainer.**

(1) Disconnect battery ground cable.

(2) Loosen screw holding fuse block and move fuse block out of the way.

(3) Remove three motor mounting nuts and pull motor out far enough to remove drive link retainer, spring, washer and link from drive crank arm. **If retainer lip was distorted in removal, it should be replaced.**

(4) From under panel remove left pivot mounting nuts and right pivot retainer.

(5) Remove the two links and left pivot as an assembly from under panel or through glove box opening if air conditioning equipped.

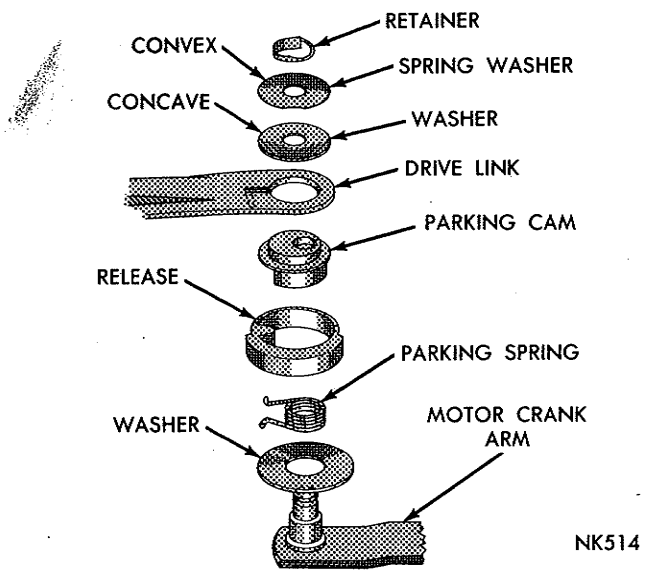


***Fig. 6—Variable Speed Parking Mechanism—Valiant and Barracuda Models***

### *Disassembly*

To service wiper links, it is necessary to remove wiper motor, left pivot and remove links as an assembly from under instrument panel.

(1) Remove connecting link retainer, felt washer, link and lower felt washer from pivot pin.

(2) Remove drive link retainer, felt washer, drive link and lower felt washer from pivot pin.

### *Assembly (Fig. 2)*

The connecting link is marked "R" (right) and "L" (left) on side facing bulkhead.

(1) Install felt washer on pivot pin farthest from pivot shaft. Lubricate pin with Automotive Multi-Purpose Lubricant, NLGI 2.

(2) Install connecting link with "L" facing away from pivot crank.

(3) Install outside felt washer and retainer.

(4) Install felt washer on pivot pin closest to pivot shaft, lubricating pin with Automotive Multi-Purpose lubricant, NLGI 2.

(5) Install drive link, (small end) outside felt washer and the retainer.

(6) Install in vehicle from under instrument panel.

**If the retainer was distorted in removal, it should be replaced.**

### *Installation*

**If air conditioning equipped, remove glove box for access to connecting link pivot retainer.**

(1) Install links and left pivot as an assembly under panel.

(2) Install left pivot and mounting nuts, connecting link on right pivot and pivot retainer.

(3) Through wiper motor opening in bulkhead, install drive link to crank arm and retainer. The lip of retainer must be tight on pivot pin.

(4) Install motor and mounting nuts.

(5) Connect battery ground cable and test wiper operation.

### *Fury Models*

### *Removal*

To service either the drive link or the connecting link it is necessary to remove the wiper arm and blade assemblies, the windshield lower moulding and the cowl grille panel to provide access to the wiper system.

(1) With wiper system in "Park" position remove retainer clip from end of motor drive crank and pin. For variable speed wipers remove cover from mechanism to allow access to retainer clip.

(2) Remove spring washer and drive link from drive crank pin.

(3) Remove retainer clip from connecting link pin on right pivot.

MyMopar.com

(4) Remove the nuts mounting left pivot to body.

(5) Remove links and left pivot through cowl grille panel opening. The connecting link can be serviced on bench after links are removed from vehicle.

### Installation

Make certain the wiper system is in the "Park" position before starting the installation procedures.

(1) With connecting and drive links assembled as a unit insert links through cowl grille panel opening and position bushing of connecting link on pin of right pivot and install retainer clip. Make certain retainer clip is completely seated on pivot pin.

(2) Install left pivot.

(3) Position motor end of drive link on drive crank pin of motor. Make certain "O" ring, release, spring, retainer and cam are in proper positions for variable speed wiper systems (Fig. 1).

(4) Install cover on mechanism on variable speed wiper systems.

(5) Install cowl grille panel, windshield lower moulding and install and adjust wiper arm and blade assemblies.

## WIPER PIVOT REPLACEMENT—

### All Except Fury Models

(1) Using Tool C-3982, remove wiper arm assembly (Fig. 3).

(2) Lower fuse block for access to left pivot. (Belvedere and Satellite Models.)

(3) From under instrument panel, disconnect links from pivots.

(4) Remove two retaining nuts from pivot mounting studs and remove pivot.

If air conditioning equipped, it is necessary to remove glove box for access to right connecting link and pivot retaining nuts (Belvedere and Satellite Models).

(5) Install a new gasket and pivot.

(6) Tighten retaining stud nuts to 75 inch-pounds.

(7) Install felt washer and lubricate with Automotive Multi-Purpose Lubricant, NLGI 2.

(8) Connect link to pivot crank pin and install washer and retainer.

(9) Using Tool C-3982, install and adjust wiper arm assembly.

(10) Install fuse block or glove box as necessary.

### Fury Models

To service either of the wiper pivots it is necessary to remove the wiper arm and blade assemblies, the windshield lower moulding and the cowl grille panel.

The right pivot is serviced after disconnecting the connecting link at the pivot and removing the screws that mount the pivot to the body.

The left pivot is serviced after disconnecting the connecting link at the right pivot, disconnecting the drive crank at the motor, removing the screws that mount the left pivot to the body and removing the links and left pivot as an assembly out through the cowl grille panel opening.

## WIPER BLADE REPLACEMENT

Exposure to heat and road splash tend to harden the rubber wiper blades. When the blades smear or in general do not satisfactorily clean the windshield, they should be replaced.

To replace, depress the release on the top of the blade assembly and slide out the rubber blade. Slide the new rubber blade into the blade assembly until it locks in place. Refer to the Parts List for the correct rubber blade refill.

# HORNS

## SERVICE DIAGNOSIS

| Condition | Possible Cause | Correction |
|---|---|---|
| HORNS WILL NOT SOUND | (a) Improper adjustment. | (a) See "Adjusting." |
| | (b) Broken or faulty wiring. | (b) See "Testing." |
| | (c) Faulty horn. | (c) See "Testing." Replace horn if necessary. |
| | (d) Faulty relay. | (d) See "Testing." Replace relay if necessary. |
| HORNS SOUND CONTINUOUSLY | (a) Shorted wiring. | (a) See "Testing." |
| | (b) Horn button sticking. | (b) Disconnect battery ground cable. Release horn button. After correction, connect battery ground cable. |
| | (c) Relay sticking. | (c) Replace relay. |

### Testing

Touch a jumper wire from relay "S" terminal to ground. If horn sounds, difficulty is in the horn button contact ring, the grounding of the steering column or in the wire from "S" terminal to the horn button. If the horn fails to sound connect a jumper wire from "B" to "H" terminal. If horns operate, the relay is defective. If horns fail to operate, difficulty is in wire to the horns, in the horns, the wire to horn

MyMopar.com

relay "B" terminal or in the grounding of the steering column.

### *Adjusting*

(1) Disconnect connections at each horn to determine which horn is not operating.

(2) Remove horn and bracket assembly.

(3) With a suitable tool (Fig. 1), turn tone adjuster counterclockwise until there is no vibration (sound).

(4) Turn tone adjuster clockwise, approximately ¼ turn at a time until tone has a clear mellow sound. Do not turn tone adjuster while horn is sounding. **Adjustment will only clear up sound and cannot change horn tone frequency.**

(5) Connect a test ammeter between positive post of a 12 volt battery and horn terminal post. Connect a jumper lead from negative battery post to horn base. Clean paint from horn bracket where connection is made. Turn adjusting screw to obtain a reading of six amperes minimum to eight amperes maximum for Sparton horns and eight amperes minimum to ten amperes maximum for Prestolite horns at 12.5 volts. **Amperage must not exceed eight amperes maximum for Sparton horns and ten amperes maximum for Prestolite horns.**

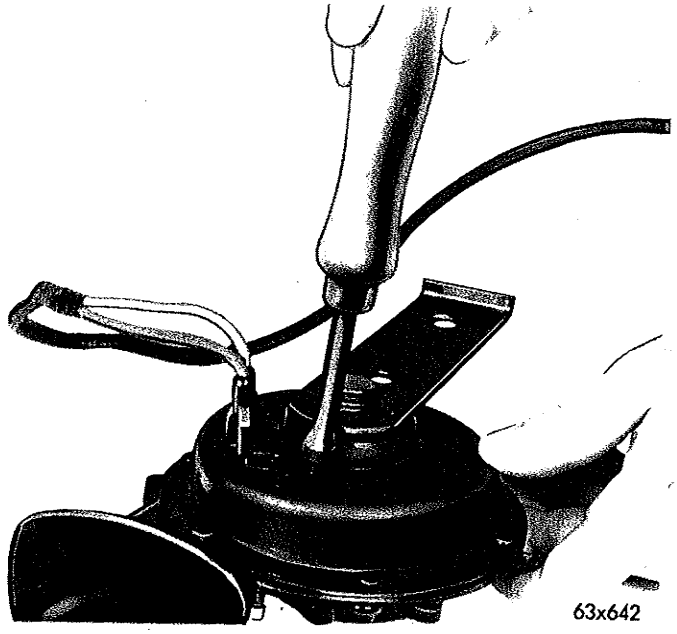


*Fig. 1—Adjusting Horn (Sparton Horn Shown)*

# SPECIFICATIONS

## BATTERY

| Engine Usage | 170 Cu. In. Engines Standard Equipment | 170 Cu. In. Engines Special Equipment | 225 Cu. In. 273 Cu. In. or 318 Cu. In. Engines Standard Equipment |
|---|---|---|---|
| Capacity (Ampere Hours) | 38 | 48 | 48 |
| Voltage | 12 | 12 | 12 |
| Number of Plates Per Cell | 7 | 9 | 9 |
| Ground Terminal | Negative | Negative | Negative |
| Model Identification Number | 20-HB-38 | 24-MB-48 | 24-MB-48 |

| Engine Usage | 361 Cu. In Engines Standard Equipment | 383 Cu. In. Engines or 426 Cu. In. Engines Standard Equipment | 170 or 225 Cu. In., 273 Cu. In., 318 Cu. In. or 361 Cu. In. Engines Special Equipment |
|---|---|---|---|
| Capacity (Ampere Hours) | 59 | 70 | 70 |
| Voltage | 12 | 12 | 12 |
| Number of Plates Per Cell | 11 | 13 | 11 |
| Ground Terminal | Negative | Negative | Negative |
| Model Identification Number | 24-MB-59 | 27-MB-70 | 24-MB-70R |

MyMopar.com

# STARTER

## *(Reduction Gear Type)*

### (ALL MODELS EQUIPPED WITH THE 170 CU. IN. ENGINE)

| | |
|---|---|
| Starter Identification Number | 2098500 |
| Make | Chrysler Built |
| Voltage | 12 |
| No. of Fields | 4 (4 Series) |
| No. of Poles | 4 |
| Brushes | 4 |
| Spring Tension | 32 to 36 Ounces |
| Drive | Overrunning Clutch |
| End Play | .010"-.045" |
| Cranking Amperage Draw Test | *155 to 170 Amps. |
| Free-Running Test | |
| Voltage | 11 |
| Amperage Draw Maximum | 90 |
| Speed RPM | 2950 |
| Locked Resistance Test | |
| Voltage | 4 |
| Amperage Draw | 340 to 420 |
| Solenoid | |
| Pull-In Coil | 14.4-16.0 Amps. @ 6.0 Volts |
| Hold-In Coil | 11.5-12.6 Amps. @ 6.0 Volts |

## *(Reduction Gear Type)*

### (All Models Except Models Equipped with the 170 Cu. In. Engine)

| | |
|---|---|
| Starter Identification Number | 2095150 |
| Make | Chrysler Built |
| Voltage | 12 |
| No. of Fields | 4 (3 Series, 1 Shunt) |
| No. of Poles | 4 |
| Brushes | 4 |
| Spring Tension | 32 to 36 Ounces |
| Drive | Overrunning Clutch |
| End Play | .010"-.045" |
| Cranking Amperage Draw Test | *155 to 170 Amps. 273 Cu. In. Engines<br>*165 to 180 Amps. 225 and 318 Cu. In. Engines<br>*180 to 200 Amps. 361, 383 and 426 Cu. In. Engines |
| Free-Running Test | |
| Voltage | 11 |
| Amperage Draw | 90 |
| Speed RPM | 1925 to 2400 |
| Locked Resistance Test | |
| Voltage | 4 |
| Amperage Draw | 400 to 450 |
| Solenoid | |
| Pull-In Coil | 14.4-16.0 Amps. @ 6.0 Volts |
| Hold-In Coil | 11.5-12.6 Amps. @ 6.0 Volts |

* Engine should be at operating temperature

## *(Direct Drive)*

### (TAXI WITH 11 INCH CLUTCH AND 225 CU. IN. ENGINE)

| | |
|---|---|
| Starter Identification Number | 1889100 |
| Make | Chrysler Built |
| Voltage | 12 |
| No. of Fields | 4 (3 Series 1 Shunt) |
| No. of Poles | 4 |
| Brushes | 4 |
| Spring Tension | 32 to 36 Ounces |

MyMopar.com

| | |
|---|---|
| Drive | Solenoid Shift Overrunning Clutch |
| End Play | .005" Minimum |
| Cranking Amperage Draw Test | *165 to 180 Amps. |
| Free-Running Test | |
| Voltage | 11 |
| Amperage Draw | 78 Amps. Maximum |
| Minimum Speed RPM | 3800 RPM |
| Locked-Resistance Test | |
| Voltage | 4 |
| Amperage Draw | 350 |
| Solenoid | |
| Pull-In Coil | 20.0 to 22.2 Amps. @6.0 Volts |
| Hold-In Coil | 11.2 to 12.4 Amps. @ 6.0 Volts |

* Engine should be up to operating temperature. Extremely heavy oil or tight engine will increase starter amperage draw.

## ALTERNATOR AND VOLTAGE REGULATOR

### ALTERNATOR

| | |
|---|---|
| Rotation | Clockwise at Drive End |
| Voltage | 12 Volt System |
| Current Output | Design Controlled |
| Voltage Output | Limited by Voltage Regulator |
| Brushes (Field) | 2 |
| Condenser Capacity | .50 Microfarad plus or minus 20% |
| Field Current Draw— | |
| Rotating Rotor by Hand @ 12 Volts | 2.38 to 2.75 Maximum amperes |
| Current Output— | |
| Standard with 170 or 225 Cu. In. Engine | 26 plus or minus 3 amperes* |
| Standard All Others | 34.5 plus or minus 3 amperes* |
| Special Equipment, Heavy Duty and/or Air Conditioning | 44 plus or minus 3 amperes* |
| Special Equipment | 51 Plus or Minus 3 Amperes |

*Plus or minus three ampere tolerance is provided to allow for temperature variation. Current output is measured at 1250 engine RPM and 15 volts at the alternator. If measured at the battery, current output will be approximately 5 amperes lower than above values. Voltage is controlled by variable load (carbon pile) across the battery.

### ALTERNATOR VOLTAGE REGULATOR

| Alternator Voltage | (Chrysler Built) | (Essex Wire Built) |
|---|---|---|
| Regulator Identification Number | 2098300 | 2444980 |
| Volts | 12 | 12 |
| Ground Polarity | Negative | Negative |
| Point Gap | .014 inch plus or minus .002 inch | .014 inch plus or minus .004 inch |
| Air Gap | .048 to .052 inch nominal setting** | .032 to .042 inch** |

**Measure gap with gauge back of stop.

| Temperature in Degrees | 47°F. | 70°F. | 93°F. | 117°F. | 140°F. | 163°F. |
|---|---|---|---|---|---|---|
| Minimum Setting | 13.6 to | 13.5 to | 13.4 to | 13.3 to | 13.2 to | 13.1 to |
| Maximum Setting | 14.6 | 14.5 | 14.4 | 14.3 | 14.2 | 14.1 |

MyMopar.com

| ENGINE APPLICATION | WITHOUT CLEANER AIR PACKAGE | | WITH CLEANER AIR PACKAGE | |
|---|---|---|---|---|
| | 170 Manual Trans. | 170 Automatic Trans. | 170 Manual Trans. | 170 Automatic Trans. |
| Engine Displacement | 170 Cu. In. | 170 Cu. In. | 170 Cu. In. | 170 Cu. In. |
| Distributor Part No.—(Chrysler Built) | 2444255 | 2444256 | 2642349 | 2642352 |
| Advance—Centrifugal (Distributor Degrees at Distributor RPM) | 0° @ 375 to 525<br>0° to 2.5° @ 525<br>8° to 10° @ 1010<br>12.5° to 14.5° @ 2200 | 0° @ 325 to 475<br>0° to 7° @ 475<br>6° to 8° @ 600<br>12.5° to 14.5° @ 2200 | 0° @ 350 to 500<br>0° to 4° @ 500<br>10.3° to 12.3° @ 875<br>18° to 20° @ 2500 | 0° @ 325 to 475<br>0° to 5.5° @ 475<br>10° to 12° @ 750<br>18° to 20° @ 2500 |
| Advance—Vacuum (Distributor Degrees at Inches of Mercury) | 0° @ 5″ to 7.1″<br>4° to 7° @ 9.2″<br>8.5° to 11.5° @ 12″ | 0° @ 5″ to 7.1″<br>3° to 6° @ 8.5″<br>6° to 8.5° @ 10″ | 0° @ 5″ to 7.1″<br>4° to 7° @ 9.2″<br>8.5° to 11.5° @ 12″ | 0° @ 5″ to 7.1″<br>3° to 6° @ 8.5″<br>6° to 8.5° @ 10″ |
| Contact Gap | .017″ to .023″ | | .017″ to .023″ | |
| Dwell Angle | 40° to 45° | | 40° to 45° | |
| Contact Arm Spring Tension | 17 to 20 oz. | | 17 to 20 oz. | |
| Condenser Capacity | .25 to .285 mfd. | | .25 to .285 mfd. | |
| Shaft Side Play (New or Rebuilt) | .000″ to .003″ * | | .000″ to .003″ * | |
| Shaft End Play (After Assembly) | .003″ to .017″ | | .003″ to .017″ | |
| Rotation | Clockwise | | Clockwise | |
| Timing | 5° BTC ** | | 5° ATC ** | |
| Spark Plug Type | N14Y-Champion or P-6-6P Mopar | | N14Y-Champion or P-6-6P Mopar | |
| Size | 14MM-¾″ Reach | | 14MM-¾″ Reach | |
| Gap | .035″ | | .035″ | |
| Firing Order | 1-5-3-6-2-4 | | 1-5-3-6-2-4 | |
| Coil | Chrysler - Prestolite | Chrysler - Essex | Chrysler - Prestolite | Chrysler - Essex |
| Identification Number | 2444242 | 2444241 | 2444242 | 2444241 |
| Primary Resistance @ 70-80°F | 1.65 to 1.79 Ohms | 1.41 to 1.55 Ohms | 1.65 to 1.79 Ohms | 1.41 to 1.55 Ohms |
| Secondary Resistance @ 70-80°F | 9400 to 11700 Ohms | 9200 to 10600 Ohms | 9400 to 11700 Ohms | 9200 to 10600 Ohms |
| Ballast Resistor—Part No.—Chrysler Built. | 2095501 | | 2095501 | |
| Resistance @ 70-80°F | 0.5 to 0.6 Ohms | | 0.5 to 0.6 Ohms | |
| Current Draw (Coil and ballast resistor in circuit) Engine Stopped | 3.0 amperes | | 3.0 amperes | |
| Engine Idling | 1.9 amperes | | 1.9 amperes | |

* Service wear tolerance should not exceed .006 inch.
** Set at idle speed; See "Idle Speed Adjustment, Fuel System."



MyMopar.com

| ENGINE APPLICATION | WITHOUT CLEANER AIR PACKAGE | | WITH CLEANER AIR PACKAGE | |
|---|---|---|---|---|
| | 225 Manual Trans. | 225 Automatic Trans. | 225 Manual Trans. | 225 Automatic Trans. |
| Engine Displacement | 225 Cu. In. | 225 Cu. In. | 225 Cu. In. | 225 Cu. lin. |
| Distributor Part No.—(Chrysler Built) | 2444907 | 2444648 | 2642354 | 2642329 |
| Advance—Centrifugal (Distributor Degrees at Distributor RPM) | 0° @ 325 to 475<br>0° to 2.5° @ 475<br>7.5° to 9.5° @ 960<br>10.5° to 12.5° @ 2200 | 0° @ 325 to 475<br>0° to 2.5° @ 475<br>7.5° to 9.5° @ 960<br>10.5° to 12.5° @ 2200 | 0° @ 350 to 500<br>0° to 4° @ 500<br>9.7° tot 11.7° @ 850<br>15.5° to 17.5° @ 2200 | 0° @ 325 to 475<br>0° to 7.5° @ 475<br>9.25° to 11.25° @ 660<br>15.5° to 17.5° @ 2200 |
| Advance—Vacuum (Distributor Degrees at Inches of Mercury) | 0° @ 6.9″ to 9.1″<br>3° to 5° @ 12.5″<br>5.25° to 7.5° @ 15″ | 0° @ 4.9″ to 7.1″<br>3° to 5° @ 10.5″<br>5.25° to 7.5° @ 13″ | 0° @ 4.9″ to 7.1″<br>3° to 5° @ 10.5″<br>5.25° to 7.5° @ 13″ | 0° @ 5″″ to 7.1″<br>3° to 6° @ 8.5″<br>6° to 8.5° @ 10″ |
| Contact Gap | .017″ to .023″ | | .017″ to .023″ | |
| Dwell Angle | 40° to 45° | | 40° to 45° | |
| Contact Arm Spring Tension | 17 to 20 oz. | | 17 to 20 oz. | |
| Condenser Capacity | .25 to .285 mfd. | | .25 to .285 mfd. | |
| Shaft Side Play (New or Rebuilt) | .000″ to .003″ * | | .000″ to .003″ * | |
| Shaft End Play (After Assembly) | .003″ to .017″ | | .003″ to .017″ | |
| Rotation | Clockwise | | Clockwise | |
| Timing | 2½° BTC ** | | 5° ATC ** | |
| Spark Plug Type | N14Y-Champion or P-6-6P Mopar | | N14Y-Champion or P-6-6P Mopar | |
| Size | 14MM-¾″ Reach | | 14MM-¾″ Reach | |
| Gap | .035″ | | .035″ | |
| Firing Order | 1-5-3-6-2-4 | | 1-5-3-6-2-4 | |
| Coil | Chrysler - Prestolite | Chrysler - Essex | Chrysler- Pestolite | Chrysler - Essex |
| Identification Number | 2444242 | 2444241 | 2444242 | 2444241 |
| Primary Resistance @ 70-80°F | 1.65 to 1.79 Ohms | 1.41 to 1.55 Ohms | 1.65 to 1.79 Ohms | 1.41 to 1.55 Ohms |
| Secondary Resistance @ 70-80°F | 9400 to 11700 Ohms | 9200 to 10600 Ohms | 9400 to 11700 Ohms | 9200 to 10600 Ohms |
| Ballast Resistor—Part No.—Chrysler Built. | 2095501 | | 2095501 | |
| Resistance @ 70-80°F | 0.5 to 0.6 Ohms | | 0.5 to 0.6 Ohms | |
| Current Draw (Coil and ballast resistor in circuit) Engine Stopped | 3.0 amperes | | 3.0 amperes | |
| Engine Idling | 1.9 amperes | | 1.9 amperes | |

* Service wear tolerance should not exceed .006 inch.
** Set at idle speed; See "Idle Speed Adjustment, Fuel System."

MyMopar.com

| ENGINE APPLICATION | WITHOUT CLEANER AIR PACKAGE | | WITH CLEANER AIR PACKAGE | |
|---|---|---|---|---|
| | 273 2-Barrel Carburetor Manual Trans. | 273 2-Barrel Carburetor Automatic Trans. | 273 2-Barrel Carburetor Manual Trans. | 273 2-Barrel Carburetor Automatic Trans. |
| Engine Displacement | 273 Cu. In. | 273 Cu. In. | 273 Cu. In. | 273 Cu. In. |
| Distributor Part No.—(Chrysler Built) | 2642234 | 2642238 | 2642356 | 2642346 |
| Advance—Centrifugal (Distributor Degrees at Distributor RPM) | 0° @ 300 to 450<br>0° to 2.5° @ 450<br>7.5° to 9.5° @ 870<br>10.5° to 12.5° @ 1750 | 0° @ 325 to 475<br>0° to 2° @ 475<br>5° to 7° @ 830<br>8° to 10° @ 1750 | 0° @ 350 to 500<br>0° to 8° @ 500<br>10.4° to 12.4° @ 690<br>15.5° to 17.5° @ 1500 | 0° @ 350 to 500<br>0° to 7° @ 500<br>11.25° to 13.25° @ 735<br>15.5° to 17.5° @ 1900 |
| Advance—Vacuum (Distributor Degrees at Inches of Mercury) | 0° @ 5″ to 8″<br>5° to 8° @ 10″<br>10.5° to 13.5° @ 13.5″ | 0° @ 5″ to 8″<br>5° to 8° @ 10″<br>10.5° to 13.5° @ 13.5″ | 0° @ 5″ to 8″<br>5° to 8° @ 10″<br>10.5° to 13.5° @ 13.5″ | 0° @ 7″ to 9″<br>6° to 9° @ 12″<br>10.5° to 13.5° @ 15″ |
| Contact Gap | .014″ to .019″ | .014″ to .019″ | .014″ to .019″ | .014″ to .019″ |
| Dwell Angle | 28° to 32° | 28° to 32° | 28° to 32° | 28° to 32° |
| Contact Arm Spring Tension | 17 to 20 oz. | 17 to 20 oz. | 17 to 20 oz. | 17 to 20 oz. |
| Condenser Capacity | .25 to .285 mfd. | .25 to .285 mfd. | .25 to .285 mfd. | .25 to .285 mfd. |
| Shaft Side Play (New or Rebuilt) | .000″ to .003″ | .000″ to .003″ * | .000″ to .003″ | .000″ to .003″ * |
| Shaft End Play (After Assembly) | .003″ to .017″ | .003″ to .017″ | .003″ to .017″ | .003″ to .017″ |
| Rotation | Clockwise | Clockwise | Clockwise | Clockwise |
| Timing | 5° BTC ** | 10° BTC ** | 5° ATC ** | 5° ATC ** |
| Spark Plug Type | N14Y Champion or P-6-6P Mopar | N14Y Champion or P-6-6P Mopar | N14Y Champion or P-6-6P Mopar | N14Y Champion or P-6-6P Mopar |
| Size | 14MM-¾″ Reach | 14MM-¾″ Reach | 14MM-¾″ Reach | 14MM-¾″ Reach |
| Gap | .035″ | .035″ | .035″ | .035″ |
| Firing Order | 1-8-4-3-6-5-7-2 | 1-8-4-3-6-5-7-2 | 1-8-4-3-6-5-7-2 | 1-8-4-3-6-5-7-2 |
| Coil | Chrysler - Prestolite | Chrysler - Essex | Chrysler - Prestolite | Chrysler - Essex |
| Identification Number | 2444242 | 2444241 | 2444242 | 2444241 |
| Primary Resistance @ 70-80°F | 1.65 to 1.79 Ohms | 1.41 to 1.55 Ohms | 1.65 to 1.79 Ohms | 1.41 to 1.55 Ohms |
| Secondary Resistance @ 70-80°F | 9400 to 11700 Ohms | 9200 to 10600 Ohms | 9400 to 11700 Ohms | 9200 to 10600 Ohms |
| Ballast Resistor—Part No.—(Chrysler Built) | 2095501 | | 2095501 | |
| Resistance @ 70-80°F | 0.5 to 0.6 Ohms | | 0.5 to 0.6 Ohms | |
| Current Draw (Coil and ballast resistor in circuit) Engine Stopped | 3.0 amperes | | 3.0 amperes | |
| Engine Idling | 1.9 amperes | | 1.9 amperes | |

* Service wear tolerance should not exceed .006 inch.
** Set at idle speed; See "Idle Speed Adjustment, Fuel System."

MyMopar.com

| ENGINE APPLICATION | WITHOUT CLEANER AIR PACKAGE<br>273<br>4-Barrel Carburetor<br>Manual or Automatic Trans. | WITH CLEANER AIR PACKAGE<br>273<br>4-Barrel Carburetor<br>Manual or Automatic Trans. |
|---|---|---|
| Engine Displacement | 273 Cu. In. | 273 Cu. In. |
| Distributor Part No.—(Chrysler Built) | 2642242 | 2642358 |
| (Prestolite) | IBS-4013A | IBS-4013B |
| Advance—Centrifugal (Distributor Degrees at Distributor RPM) | 0° @ 325 to 475<br>0° to 3° @ 475<br>5° to 7° @ 725<br>8° to 10° @ 1800 | 0° @ 350 to 500<br>0° to 6.5° @ 500<br>12° to 14° @ 780<br>15.5° to 17.5° @ 2000 |
| Advance—Vacuum (Distributor Degrees at Inches of Mercury) | 0° @ 5″ to 8″<br>5° to 8° @ 10″<br>8.5° to 11.5° @ 12″ | 0° @ 5″ to 8″<br>5° to 8° @ 10″<br>8.5° to 11.5° @ 12″ |
| Contact Gap | .014″ to .019″ | .014″ to .019″ |
| Dwell Angle | one set points 27° to 31°<br>both sets points 36° to 40° | one set points 27° to 31°<br>both sets points 36° to 40° |
| Contact Arm Spring Tension | 17 to 21.5 oz. | 17 to 21.5 oz. |
| Condenser Capacity | .25 to .285 mfd. | .25 to .285 mfd. |
| Shaft Side Play (New or Rebuilt) | .000″ to .003″ * | .000″ to .003″ * |
| Shaft End Play (After Assembly) | .003″ to .010″ | .003″ to .010″ |
| Rotation | Clockwise | Clockwise |
| Timing | 10° BTC ** | 5° ATC ** |
| Spark Plug Type | N9Y Champion or<br>P-6-2P Mopar | N9Y Champion<br>P-6-2P Mopar |
| Size | 14MM-¾″ Reach | 14MM-¾″ Reach |
| Gap | 0.35″ | .035″ |
| Firing Order | 1-8-4-3-6-5-7-2 | 1-8-4-3-6-5-7-2 |
| Coil | Chrysler - Prestolite | Chrysler - Essex |
| Identification Number | 2444242 | 2444241 |
| Primary Resistance @ 70-80°F | 1.65 to 1.79 Ohms | 1.41 to 1.55 Ohms |
| Secondary Resistance @ 70-80°F | 9400 to 11700 Ohms | 9200 to 10600 Ohms |
| Ballast Resistor—Part No.—(Chrysler Built) | 2095501 | |
| Resistance @ 70-80°F | 0.5 to 0.6 Ohms | |
| Current Draw (Coil and ballast resistor in circuit) Engine Stopped | 3.0 amperes | |
| Engine Idling | 1.9 amperes | |

* Service wear tolerance should not exceed .006 inch.

** Set at idle speed; See "Idle Speed Adjustment, Fuel System."

MyMopar.com

| ENGINE APPLICATION | WITHOUT CLEANER AIR PACKAGE | | WITH CLEANER AIR PACKAGE | |
|---|---|---|---|---|
| | 318 2-Barrel Carburetor Manual Trans. | 318 2-Barrel Carburetor Automatic Trans. | 318 2-Barrel Carburetor Manual Trans. | 318 2-Barrel Carburetor Automatic Trans. |
| Engine Displacement | 318 Cu. In. | 318 Cu. In. | 318 Cu. In. | 318 Cu. In. |
| Distributor Part No.—(Chrysler Built) | 2444258 | 2444259 | 2642360 | 2642343 |
| Advance—Centrifugal (Distributor Degrees at Distributor RPM) | 0° @ 320 to 480<br>0° to 2° @ 480<br>4.5° to 6.5° @ 850<br>10.5° to 12.5° @ 2300 | 0° to 330 to 570<br>0° to 2° @ 570<br>2° to 4° @ 800<br>8° to 10° @ 2300 | 0° @ 325 to 475<br>0° to 6.5° @ 475<br>7.75° to 9.75° @ 660<br>15.5° to 17.5° @ 2350 | 0° @ 325 to 475<br>0° to 4° @ 475<br>8.75° to 10.75° @ 800<br>15.5° to 17.5° @ 2350 |
| Advance—Vacuum (Distributor Degrees at Inches of Mercury) | 0° @ 8″ to 10″<br>5° to 8° @ 13″<br>9° to 12° @ 16″ | 0° @ 8″ to 10″<br>5° to 8° @ 13″<br>9° to 12° @ 16″ | 0° @ 8″ to 10″<br>5° to 8° @ 13″<br>9° to 12° @ 16″ | 0° @ 8″ to 10″<br>5° to 8° @ 13″<br>9° to 12° @ 16″ |
| Contact Gap | .014″ to .019″ | .014″ to .019″ | .014″ to .019″ | .014″ to .019″ |
| Dwell Angle | 28° to 32° | 28° to 32° | 28° to 32° | 28° to 32° |
| Contact Arm Spring Tension | 17 to 20 oz. | 17 to 20 oz. | 17 to 20 oz. | 17 to 20 oz. |
| Condenser Capacity | .25 to .285 mfd. | .25 to .285 mfd. | .25 to .285 mfd. | .25 to .285 mfd. |
| Shaft Side Play (New or Rebuilt) | .000″ to .003″ * | .000″ to .003″ * | .000″ to .003″ * | .000″ to .003″ |
| Shaft End Play (After Assembly) | .003″ to .017″ | .003″ to .017″ | .003″ to .017″ | .003″ to .017″ |
| Rotation | Clockwise | Clockwise | Clockwise | Clockwise |
| Timing | 5° BTC ** | 10° BTC ** | 5° ATC ** | 5° ATC ** |
| Spark Plug Type | J-14Y Champion or P-3-6P Mopar | J-14Y Champion or P-3-6P Mopar | J-14Y Champion or P-3-6P Mopar | J-14Y Champion or P-3-6P Mopar |
| Size | 14MM-3/8″ Reach | 14MM-3/8″ Reach | 14MM-3/8″ Reach | 14MM-3/8″ Reach |
| Gap | .035″ | .035″ | .035″ | .035″ |
| Firing Order | 1-8-4-3-6-5-7-2 | 1-8-4-3-6-5-7-2 | 1-8-4-3-6-5-7-2 | 1-8-4-3-6-5-7-2 |
| Coil | Chrysler - Prestolite | Chrysler - Essex | Chrysler - Prestolite | Chrysler - Essex |
| Identification Number | 2444242 | 2444241 | 2444242 | 2444241 |
| Primary Resistance @ 70-80°F | 1.65 to 1.79 Ohms | 1.41 to 1.55 Ohms | 1.65 to 1.79 Ohms | 1.41 to 1.55 Ohms |
| Secondary Resistance @ 70-80°F | 9400 to 11700 Ohms | 9200 to 10600 Ohms | 9400 to 11700 Ohms | 9200 to 10600 Ohms |
| Ballast Resistor—Part No.—(Chrysler Built) | 2095501 | | 2095501 | |
| Resistance @ 70-80°F | 0.5 to 0.6 Ohms | | 0.5 to 0.6 Ohms | |
| Current Draw (Coil and ballast resistor in circuit) Engine Stopped | 3.0 amperes | | 3.0 amperes | |
| Engine Idling | 1.9 amperes | | 1.9 amperes | |

* Service wear tolerance should not exceed .006 inch.
** Set at idle speed; See "Idle Speed Adjustment, Fuel System."

MyMopar.com

| ENGINE APPLICATION | WITHOUT CLEANER AIR PACKAGE<br>361<br>2-Barrel Carburetor<br>Manual & Automatic Trans. | WITH CLEANER AIR PACKAGE<br>361<br>2-Barrel Carburetor<br>Automatic Trans. | WITH CLEANER AIR PACKAGE<br>361<br>2-Barrel Carburetor<br>Manual Trans. |
|---|---|---|---|
| Engine Displacement | 361 Cu. In. | 361 Cu. In. | 361 Cu. In. |
| Distributor Part No.—(Chrysler Built) | 2642244 | 2642289 | 2642373 |
| Advance—Centrifugal (Distributor Degrees at Distributor RPM) | 0° @ 250 to 450<br>0° to 2° @ 450<br>2.5° to 4.5° @ 700<br>10.5° to 12.5° @ 2150 | 0° @ 350 to 500<br>0° to 8.5° @ 500<br>9.4° to 11.4° @ 665<br>18° to 20° @ 2200 | 0° @ 350 to 500<br>0° to 8.5° @ 500<br>9.4° to 11.4° @ 665<br>18° to 20° @ 2200 |
| Advance—Vacuum (Distributor Degrees at Inches of Mercury) | 0° @ 4.5″ to 8″<br>4° to 7° @ 10.5″<br>8° to 11° @ 13.6″ | 0° @ 4.5″ to 8″<br>6° to 9° @ 12″<br>11.50 to 14.5° @ 16.5″ | 0° @ 4.5″ to 6.9″<br>5° to 8° @ 10″<br>11.5° to 14.5° @ 14.5″ |
| Contact Gap | .014″ to .019″ | .014″ to .019″ | .014″ to .019″ |
| Dwell Angle | 28° to 32° | 28° to 32° | 28° to 32° |
| Contact Arm Spring Tension | 17 to 20 oz. | 17 to 20 oz. | 17 to 20 oz. |
| Condenser Capacity | .25 to .285 mfd. | .25 to .285 mfd. | .25 to .285 mfd. |
| Shaft Side Play (New or Rebuilt) | .000″ to .003″ * | .000″ to .003″ * | .000″ to .003″ * |
| Shaft End Play (After Assembly) | .003″ to .017″ | .003″ to .017″ | .003″ to .017″ |
| Rotation | Counterclockwise | Counterclockwise | Counterclockwise |
| Timing | 12½° BTC ** | 5° ATC ** | 5° ATC ** |
| Spark Plug Type | J-14Y Champion or P-3-6P Mopar | J-14Y Champion P-3-6P Mopar | |
| Size | 14MM-⅜″ Reach | 14MM-⅜″ Reach | |
| Gap | .035″ | 035″ | |
| Firing Order | 1-8-4-3-6-5-7-2 | 1-8-4-3-6-5-7-2 | |
| Coil | Chrysler - Prestolite / Chrysler - Essex | Chrysler - Prestolite / Chrysler - Essex | |
| Identification Number | 2444242 / 2444241 | 2444242 / 2444241 | |
| Primary Resistance @ 70-80°F | 1.65 to 1.79 Ohms / 1.41 to 1.55 Ohms | 1.65 to 1.79 Ohms / 1.41 to 1.55 Ohms | |
| Secondary Resistance @ 70-80°F | 9400 to 11700 Ohms / 9200 to 10600 Ohms | 9400 to 11700 Ohms / 9200 to 10600 Ohms | |
| Ballast Resistor—Part No.—(Chrysler Built) | 2095501 | 2095501 | |
| Resistance @ 70-80°F | 0.5 to 0.6 Ohms | 0.5 to 0.6 Ohms | |
| Current Draw (Coil and ballast resistor in circuit) Engine Stopped | 3.0 amperes | 3.0 amperes | |
| Engine Idling | 1.9 amperes | 1.9 amperes | |

* Service wear tolerance should not exceed .006 inch.

** Set at idle speed; See "Idle Speed Adjustment, Fuel System."

MyMopar.com

| ENGINE APPLICATION | WITHOUT CLEANER AIR PACKAGE | | WITH CLEANER AIR PACKAGE | |
|---|---|---|---|---|
| | 383 2-Barrel Carburetor Manual or Automatic Trans. | | 383 2-Barrel Carburetor Automatic Trans. | 383 2-Barrel Carburetor Manual Trans. |
| Engine Displacement | 383 Cu. In. | | 383 Cu. In. | 383 Cu. In. |
| Distributor Part No.—(Chrysler Built) | 2642244 | | 2642289 | 2642373 |
| Advance—Centrifugal—(Distributor Degrees at Distributor RPM) | 0° @ 250 to 450<br>0° to 2° @ 450<br>2.5° to 4.5° @ 700<br>10.5° to 12.5° @ 2150 | | 0° @ 350 to 500<br>0° to 8.5° @ 500<br>9.4° to 11.4° @ 665<br>18° to 20° @ 2200 | 0° @ 350 to 500<br>0° to 8.5° @ 500<br>9.4° to 11.4° @ 665<br>18° to 20° @ 2200 |
| Advance—Vacuum (Distributor Degrees at Inches of Mercury) | 0° @ 4.5" tot 8"<br>4° to 7° @ 10.5"<br>8° to 11° @ 13.6" | | 0° @ 4.5" to 8"<br>6° to 9° @ 12"<br>11.5° to 14.5° @ 16.5" | 0° @ 4.5" to 6.9"<br>5° to 8° @ 10"<br>11.5° to 14.5° @ 14.5" |
| Contact Gap | .014" to .019" | | .014" to .019" | .014" to .019" |
| Dwell Angle | 28° to 32° | | 28° to 32° | 28° to 32° |
| Contact Arm Spring Tension | 17 to 20 oz. | | 17 to 20 oz. | 17 to 20 oz. |
| Condenser Capacity | .25 to .285 mfd. | | .25 to .285 mfd. | .25 to .285 mfd. |
| Shaft Side Play (New or Rebuilt) | .000" to .003" * | | .000" to .003" * | .000" to .003" * |
| Shaft End Play (After Assembly) | .003" to .017" | | .003" to .017" | .003" to .017" |
| Rotation | Counterclockwise | | Counterclockwise | Counterclockwise |
| Timing | 12.5° BTC ** | | 5° ATC ** | 5° ATC ** |
| Spark Plug Type | J-14Y Champion or P-3-6P Mopar<br>J-10Y Champion or P-3-3P Mopar *** | | J-14Y Champion or P-3-6P Mopar<br>J-10Y Champion or P-3-3P Mopar *** | |
| Size | 14MM-3/8" Reach | | 14MM-3/4" Reach | |
| Gap | .035" | | .035" | |
| Firing Order | 1-8-4-3-6-5-7-2 | | 1-8-4-3-6-5-7-2 | |
| Coil | Chrysler - Prestolite | Chrysler - Essex | Chrysler - Prestolite | Chrysler - Essex |
| Identification Number | 2444242 | 2444241 | 2444242 | 2444241 |
| Primary Resistance @ 70-80°F | 1.65 to 1.79 Ohms | 1.41 to 1.55 Ohms | 1.65 to 1.79 Ohms | 1.41 to 1.55 Ohms |
| Secondary Resistance @ 70-80°F | 9400 to 11700 Ohms | 9200 to 10600 Ohms | 9400 to 11700 Ohms | 9200 to 10600 Ohms |
| Ballast Resistor—Part No.—(Chrysler Built) | 2095501 | | 2095501 | |
| Resistance @ 70-80°F | 0.5 to 0.6 Ohms | | 0.5 to 0.6 Ohms | |
| Current Draw (Coil and ballast resistor in circuit) Engine Stopped | 3.0 amperes | | 3.0 amperes | |
| Engine Idling | 1.9 amperes | | 1.9 amperes | |

* Service wear tolerance should not exceed .006 inch.
** Set at idle speed; See "Idle Speed Adjustment, Fuel System."
*** Mopar P-3-3P, J-10Y Champion (Police Cars)

MyMopar.com

| ENGINE APPLICATION | WITHOUT CLEANER AIR PACKAGE<br>383<br>4-Barrel Carburetor<br>Manual or Automatic Trans. | WITH CLEANER AIR PACKAGE<br>383<br>4-Barrel Carburetor<br>Manual Trans. | WITH CLEANER AIR PACKAGE<br>383<br>4-Barrel Carburetor<br>Automatic Trans. |
|---|---|---|---|
| Engine Displacement | 383 Cu. In. | 383 Cu. In. | 383 Cu. In. |
| Distributor Part No.—(Chrysler Built) | 2642248 | 2642367 | 2642363 |
| Advance—Centrifugal—(Distributor Degrees at Distributor RPM) | 0° @ 310 to 490<br>0° to 2° @ 490<br>3° to 5° @ 750<br>7° to 9° @ 2400 | 0° @ 350 to 500<br>0° to 7° @ 500<br>10.7° to 12.7° @ 730<br>15.5° to 17.5° @ 2400 | 0° @ 350 to 500<br>0° to 4.5° @ 500<br>10.7° to 12.7° @ 850<br>15.5° to 17.5° @ 2400 |
| Advance—Vacuum (Distributor Degrees at Inches of Mercury) | 0° @ 6" to 9"<br>4.5° to 7.5° @ 12"<br>8.25° to 11° @ 15" | 0° @ 4.5" to 8"<br>6° to 9° @ 12"<br>11.5° to 14.5° @ 16.5" | 0° @ 4.5" to 8"<br>6° to 9° @ 12"<br>11.5° to 14.5° @ 16.5" |
| Contact Gap | .014" to .019" | .014" to .019" | .014" to .019" |
| Dwell Angle | 28° to 32° | 28° to 32° | 28° to 32° |
| Contact Arm Spring Tension | 17 to 20 oz. | 17 to 20 oz. | 17 to 20 oz. |
| Condenser Capacity | .25 to .285 mfd. | .25 to .285 mfd. | .25 to .285 mfd. |
| Shaft Side Play (New or Rebuilt) | .000" to .003" * | .000" to .003" * | .000" to .003" * |
| Shaft End Play (After Assembly) | .003" to .017" | .003" to .017" | .003" to .017" |
| Rotation | Counterclockwise | Counterclockwise | Counterclockwise |
| Timing | 12.5° BTC ** | 5° ATC ** | 5° ATC ** |
| Spark Plug Type | J-13Y Champion or<br>P-3-5P Mopar ***<br>J-10Y Champion or<br>P-3-3P Mopar **** | J-13Y Champion<br>P-3-5P Mopar ***<br>J-10Y Champion or<br>P-3-3P Mopar **** | J-13Y Champion<br>P-3-5P Mopar ***<br>J-10Y Champion or<br>P-3-3P Mopar **** |
| Size | 14MM-3/8" Reach | 14MM-3/8" Reach | 14MM-3/8" Reach |
| Gap | .035" | .035" | .035" |
| Firing Order | 1-8-4-3-6-5-7-2 | 1-8-4-3-6-5-7-2 | 1-8-4-3-6-5-7-2 |
| Coil | Chrysler - Prestolite / Chrysler - Essex | Chrysler - Prestolite / Chrysler - Essex | Chrysler - Prestolite / Chrysler - Essex |
| Identification Number | 2444242 / 2444241 | 2444242 / 2444241 | 2444242 / 2444241 |
| Primary Resistance @ 70-80°F | 1.65 to 1.79 Ohms / 1.41 to 1.55 Ohms | 1.65 to 1.79 Ohms / 1.41 to 1.55 Ohms | 1.65 to 1.79 Ohms / 1.41 to 1.55 Ohms |
| Secondary Resistance @ 70-80°F | 9400 to 11700 Ohms / 9200 to 10600 Ohms | 9400 to 11700 Ohms / 9200 to 10600 Ohms | 9400 to 11700 Ohms / 9200 to 10600 Ohms |
| Ballast Resistor—Part No.—(Chrysler Built) | 2095501 | 2095501 | 2095501 |
| Resistance @ 70-80°F | 0.5 to 0.6 Ohms | 0.5 to 0.6 Ohms | 0.5 to 0.6 Ohms |
| Current Draw (Coil and ballast resistor in circuit) Engine Stopped | 3.0 amperes | 3.0 amperes | 3.0 amperes |
| Engine Idling | 1.9 amperes | 1.9 amperes | 1.9 amperes |

* Service wear tolerance should not exceed .006 inch.
** Set at idle speed; See "Idle Speed Adjustment, Fuel System."
*** If J-13Y or Mopar P-3-5P are not available use Champion J-12Y.
**** Mopar P-3-3P, J-10Y Champion (Police Cars)

MyMopar.com

| ENGINE APPLICATION | WITHOUT CLEANER AIR PACKAGE<br>426<br>4-Barrel Carburetor<br>Manual or Automatic Trans. | WITH CLEANER AIR PACKAGE<br>426<br>4-Barrel Carburetor<br>Automatic Trans. | WITH CLEANER AIR PACKAGE<br>426<br>4-Barrel Carburetor<br>Manual Trans. |
|---|---|---|---|
| Engine Displacement | 426 Cu. In. | 426 Cu. In. | 426 Cu. In. |
| Distributor Part No.—(Chrysler Built) | 2642252 | 2642365 | 2642369 |
| Advance—Centrifugal (Distributor Degrees at Distributor RPM) | 0° @ 310 to 490<br>0° to 2° @ 490<br>3° to 5° @ 750<br>7° to 9° @ 2400 | 0° @ 350 to 500<br>0° to 4.5° @ 500<br>10.7° to 12.7° @ 850<br>15.5° to 17.5° @ 2400 | 0° @ 350 to 500<br>0° to 7° @ 500<br>10.7° to 12.7° @ 730<br>15.5° to 17.5° @ 2400 |
| Advance—Vacuum (Distributor Degrees at Inches of Mercury) | 0° @ 6″ to 9″<br>4.5° to 7.5° @ 12″<br>8.25° to 11° @ 15″ | 0° @ 4.5″ to 8″<br>6° to 9° @ 12″<br>11.5° to 14.5° @ 16.5″ | 0° @ 4.5″ to 8″<br>6° to 9° @ 12″<br>11.5° tto 14.5° @ 16.5″ |
| Contact Gap | .014″ to .019″ | .014″ to .019″ | .014″ to .019″ |
| Dwell Angle | 28° to 32° | 28° to 32° | 28° to 32° |
| Contact Arm Spring Tension | 17 to 20 oz. | 17 to 20 oz. | 17 to 20 oz. |
| Condenser Capacity | .25 to .285 mfd. | .25 to .285 mfd. | .25 to .285 mfd. |
| Shaft Side Play (New or Rebuilt) | .000″ to .003″ * | .000″ to .003″ * | .000″ to .003″ * |
| Shaft End Play (After Assembly) | .003″ to .017″ | .003″ to .017″ | .003″ to .017″ |
| Rotation | Counterclockwise | Counterclockwise | Counterclockwise |
| Timing | 12.5° BTC ** | 5° ATC ** | 5° ATC ** |
| Spark Plug Type | J-13Y Champion or P-3-5P Mopar *** | J-13Y Champion or P-3-5P Mopar *** | J-13Y Champion or P-3-5P Mopar *** |
| | J-10Y Champion or P-3-3P Mopar **** | J-10Y Champion or P-3-3P Mopar **** | J-10Y Champion or P-3-3P Mopar **** |
| Size | 14MM-3/8″ Reach | 14MM-3/8″ Reach | 14MM-3/8″ Reach |
| Gap | .035″ | .035″ | .035″ |
| Firing Order | 1-8-4-3-6-5-7-2 | 1-8-4-3-6-5-7-2 | 1-8-4-3-6-5-7-2 |
| Coil | Chrysler - Prestolite / Chrysler - Essex | Chrysler - Prestolite / Chrysler - Essex | Chrysler - Essex |
| Identification Number | 2444242 / 2444241 | 2444242 / 2444241 | 2444241 |
| Primary Resistance @ 70-80°F | 1.65 to 1.79 Ohms / 1.41 to 1.55 Ohms | 1.65 to 1.79 Ohms / 1.41 to 1.55 Ohms | 1.41 to 1.55 Ohms |
| Secondary Resistance @ 70-80°F | 9400 to 11700 Ohms / 9200 to 10600 Ohms | 9400 to 11700 Ohms / 9200 to 10600 Ohms | 9200 to 10600 Ohms |
| Ballast Resistor—Part No.—(Chrysler Built) | 2095501 | 2095501 | 2095501 |
| Resistance @ 70-80°F | 0.5 to 0.6 Ohms | 0.5 to 0.6 Ohms | 0.5 to 0.6 Ohms |
| Current Draw (Coil and ballast resistor in circuit) Engine Stopped | 3.0 amperes | 3.0 amperes | 3.0 amperes |
| Engine Idling | 1.9 amperes | 1.9 amperes | 1.9 amperes |

* Service wear tolerance should not exceed .006 inch.
** Set at idle speed; See "Idle Speed Adjustment, Fuel System."
*** If J-13Y Champion or P-3-5P Mopar are not available, use Champion J-12Y.
**** (Police Cars.)

MyMopar.com

## CIRCUIT BREAKERS

| CIRCUIT BREAKER | Location | Ampere Rating |
|---|---|---|
| Lighting System | Integral with Headlight Switch | |
| | Belvedere and Satellite Models | 20 |
| | Valiant and Barracuda Models | 15 |
| Power Seats, Top Lift* | Behind left front kick panel | 30 |
| Power Windows | Behind left front kick panel | 30 |
| Windshield Wiper | Integral with Wiper Switch | |
| | Single Speed | 5 |
| | Variable Speed | 6 |

* Electric Window Lifts, and Power Seats—Belvedere and Satellite models only.

## LIGHT BULBS

| | Bulb Number |
|---|---|
| Ash Receiver | 57 |
| Auto Pilot | 57 |
| Back-up Lights | 1073 |
| Clock | 57 |
| Dome Lights | 1004 |
| Door and/or Pocket | 90 |
| Emergency Flasher | 57 |
| Fender Mounted Turn Signals | 330 |
| Gear Selector Indicator | 1445* |
| Gear Selector with Console | 57 |
| Glove Compartment | 1891 |
| Handbrake Indicator | 57** |
| Heater and/or A.C. Control | 1893 |
| High Beam Indicator | 158 |
| Instrument Cluster Illumination | 158 |
| Ignition Switch | 158 |
| License Light | 67 |
| Map Light | 90 |
| Oil Pressure Indicator | 158 |
| Panel and/or Ridge Light | 90 |
| Park and Turn Signal | 1034A |
| Radio | 1893 |
| Sealed Beam—Hi-Beam (No. 1) | 4001 |
| Sealed Beam—Hi-Lo Beam (No. 2) | 4002 |
| Sealed Beam—Single "7" | 6012 |
| Tachometer with Console | 57 |
| Tail Stop and Turn Signal | 1034 |
| Trunk and/or Under Hood Light | 1004 |
| Turn Signal Indicator | 158*** |

* Fury Bulb Number 158
** Fury Bulb Number 256
*** Fury Bulb Number 57

## FUSES

| CIRCUIT | Fuse Type | Ampere Rating |
|---|---|---|
| Accessories | 3 AG/AGC | 20 AMP |
| Cigar Lighter | 3 AG/AGC | 20 AMP |
| Heater or Air Cond. | 3 AG/AGC | 20 AMP |
| Instrument Lights | 3 AG/AGC | 2 AMP Valiant<br>2 AMP Barracuda<br>3 AMP Belvedere<br>3 AMP Satellite<br>4 AMP Fury |
| Radio | 3 AG/AGC | 5 AMP |
| Tail, Stop, Done | 3 AG/AGC | 20 AMP |

MyMopar.com

# WIRING DIAGRAMS

## INDEX


| | Page |
|---|---|
| BELVEDERE AND SATELLITE MODELS | |
| Air Conditioning | See Group 24 |
| Body Wiring—All Models Except Station Wagon | 104 |
| Body Wiring—Station Wagon | 105 |
| Console Wiring—All Models | 106 |
| Engine Compartment | 101 |
| Instrument Panel | 102 |
| Power Seat | See Group 23 |
| Power Windows | See Group 23 |
| Tail Gate or Top Lift | See Group 23 |
| FURY MODELS | |
| Air Conditioning | See Group 24 |
| Body—All Models Except Station Wagon | 110 |
| Body—Station Wagons | 111 |
| Console—Manual Transmission Without Tachometer | 112 |
| Console—Manual Transmission With Tachometer | 112 |
| Console—Automatic Transmission Without Tachometer | 113 |
| Console—Automatic Transmission With Tachometer | 113 |
| Electric Door Locks | See Group 23 |
| Engine Compartment | 107 |
| Instrument Panel | 108 |
| Power Seat | See Group 23 |
| Power Windows and Vents | See Group 23 |
| Tail Gate or Top Lift | See Group 23 |
| VALIANT AND BARRACUDA MODELS | |
| Air Conditioning | See Group 24 |
| Body—All Models Except Station Wagon | 119 |
| Body—Station Wagons | 120 |
| Console—All Models | 121 |
| Engine Compartment | 118 |
| Instrument Panel | |
| Valiant | 114 |
| Barracuda | 116 |
| Tail Gate or Top Lift | See Group 23 |


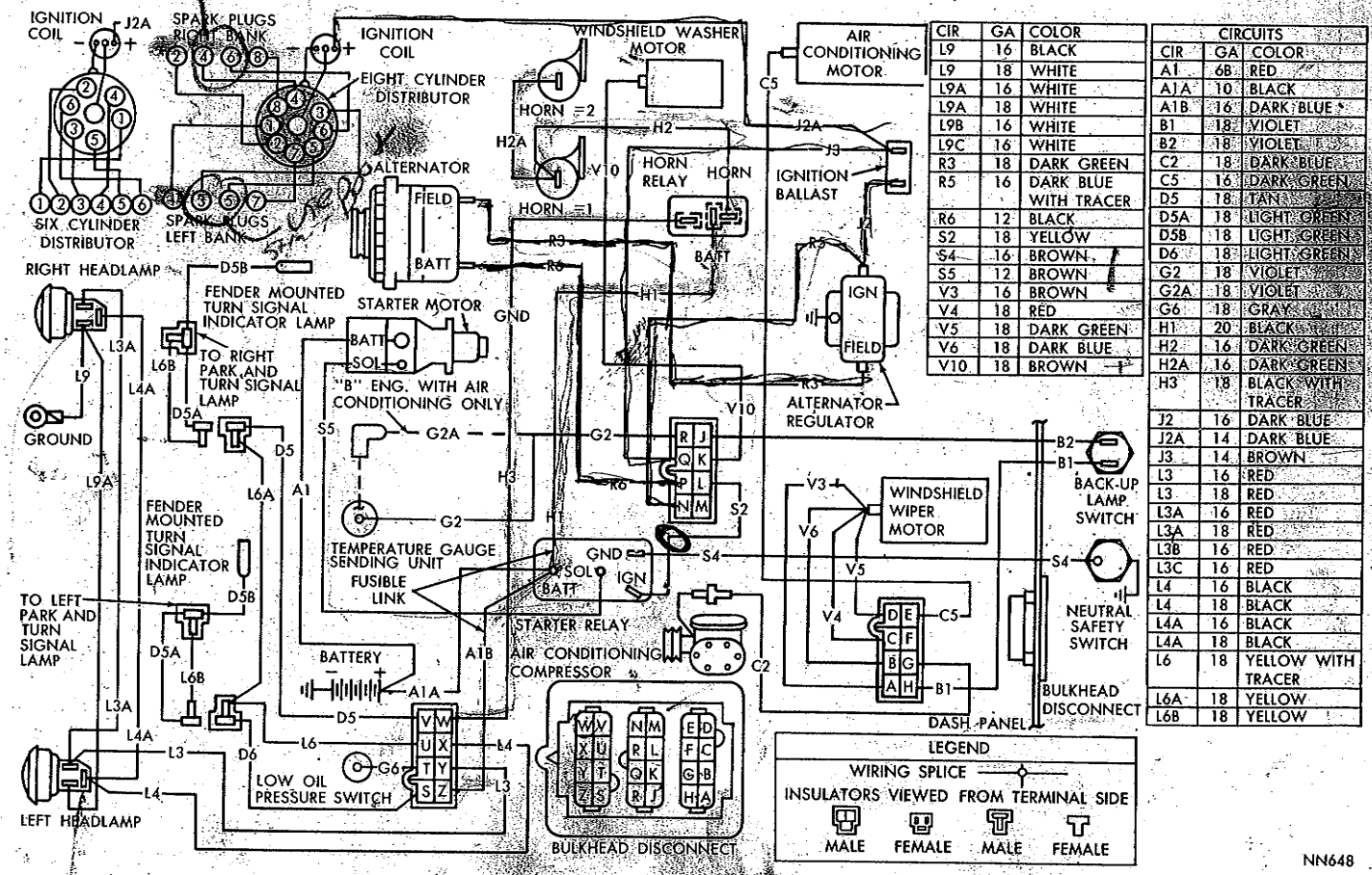


| CIR | GA | COLOR |
|---|---|---|
| L9 | 16 | BLACK |
| L9 | 18 | WHITE |
| L9A | 16 | WHITE |
| L9A | 18 | WHITE |
| L9B | 16 | WHITE |
| L9C | 16 | WHITE |
| R3 | 18 | DARK GREEN |
| R5 | 16 | DARK BLUE WITH TRACER |
| R6 | 12 | BLACK |
| S2 | 18 | YELLOW |
| S4 | 16 | BROWN |
| S5 | 12 | BROWN |
| V3 | 16 | BROWN |
| V4 | 18 | RED |
| V5 | 18 | DARK GREEN |
| V6 | 18 | DARK BLUE |
| V10 | 18 | BROWN |

| CIRCUITS | | |
|---|---|---|
| CIR | GA | COLOR |
| A1 | 6B | RED |
| A1A | 10 | BLACK |
| A1B | 16 | DARK BLUE * |
| B1 | 18 | VIOLET |
| B2 | 18 | VIOLET |
| C2 | 18 | DARK BLUE |
| C5 | 16 | DARK GREEN |
| D5 | 18 | TAN |
| D5A | 18 | LIGHT GREEN |
| D5B | 18 | LIGHT GREEN |
| D6 | 18 | LIGHT GREEN |
| G2 | 18 | VIOLET |
| G2A | 18 | VIOLET |
| G6 | 18 | GRAY |
| H1 | 20 | BLACK |
| H2 | 16 | DARK GREEN |
| H2A | 16 | DARK GREEN |
| H3 | 18 | BLACK WITH TRACER |
| J2 | 16 | DARK BLUE |
| J2A | 14 | DARK BLUE |
| J3 | 14 | BROWN |
| L3 | 16 | RED |
| L3 | 18 | RED |
| L3A | 16 | RED |
| L3A | 18 | RED |
| L3B | 16 | RED |
| L3C | 16 | RED |
| L4 | 16 | BLACK |
| L4 | 18 | BLACK |
| L4A | 16 | BLACK |
| L4A | 18 | BLACK |
| L6 | 18 | YELLOW WITH TRACER |
| L6A | 18 | YELLOW |
| L6B | 18 | YELLOW |

***Fig. 1—Engine Compartment Wiring—Belvedere and Satellite Models***

MyMopar.com

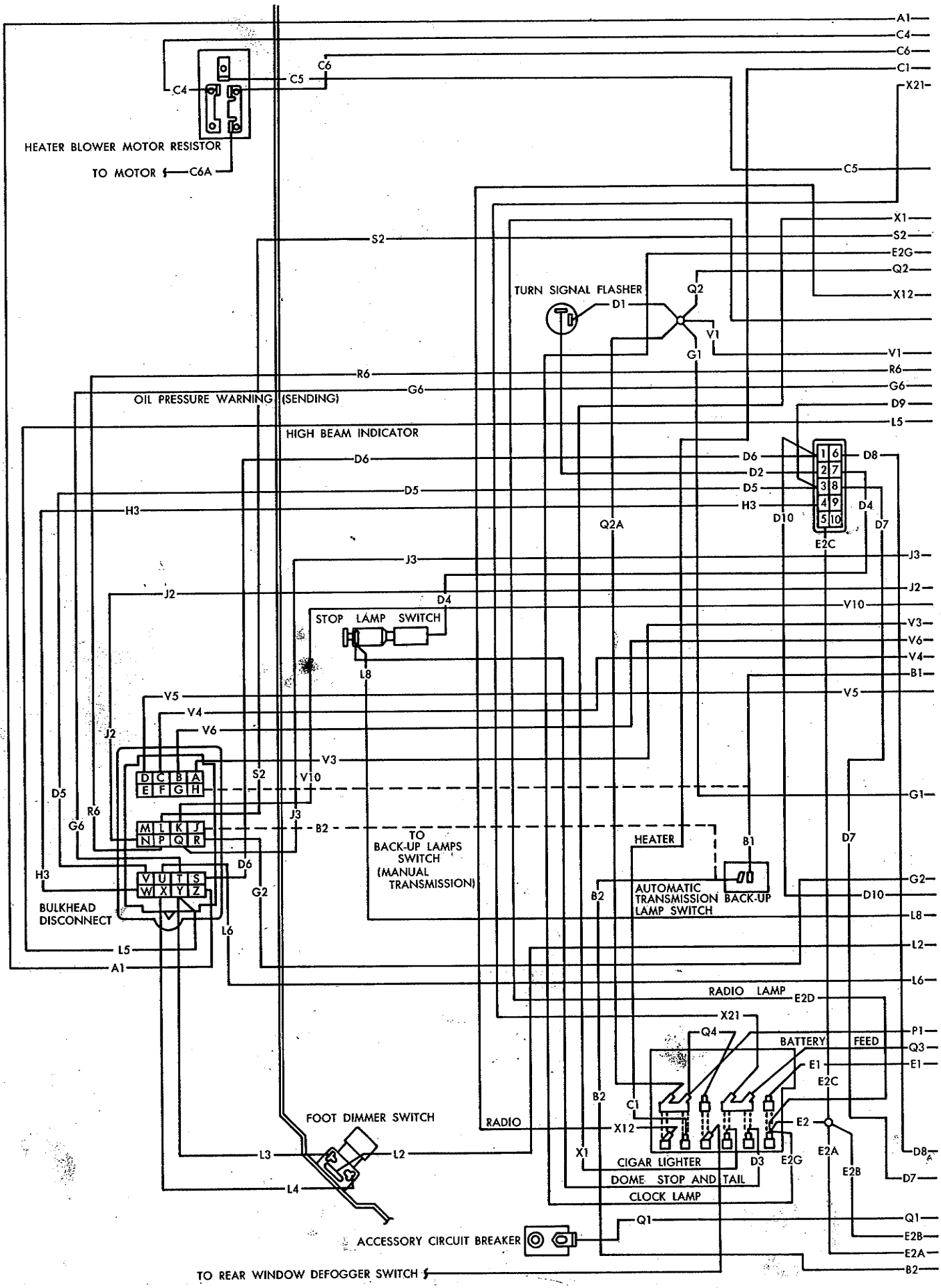


***Fig. 2—Instrument Panel Wiring—Belvedere and Satellite Models***

MyMopar.com

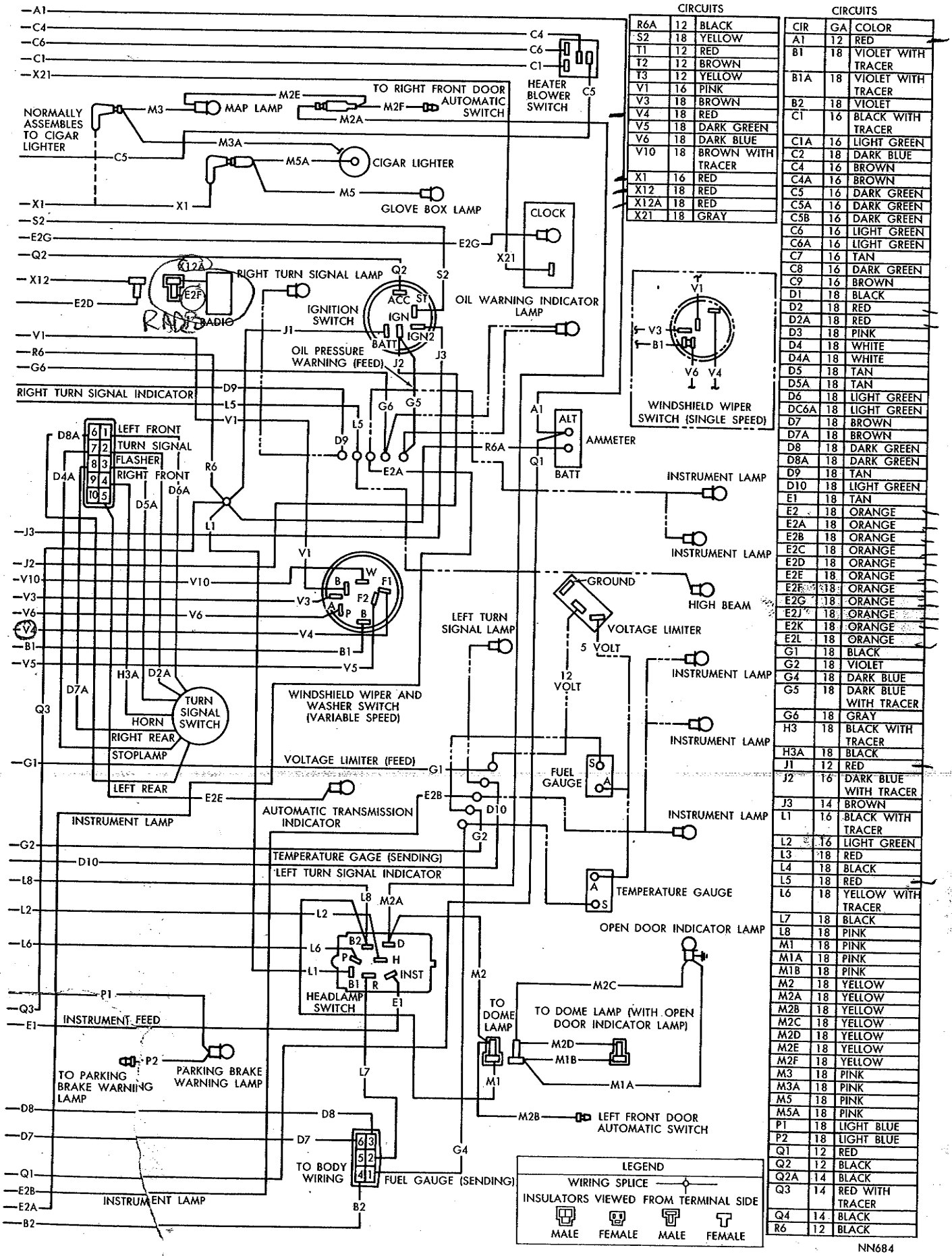


CIRCUITS

| | | |
|---|---|---|
| R6A | 12 | BLACK |
| S2 | 18 | YELLOW |
| T1 | 12 | RED |
| T2 | 12 | BROWN |
| T3 | 12 | YELLOW |
| V1 | 16 | PINK |
| V3 | 18 | BROWN |
| V4 | 18 | RED |
| V5 | 18 | DARK GREEN |
| V6 | 18 | DARK BLUE |
| V10 | 18 | BROWN WITH TRACER |
| X1 | 16 | RED |
| X12 | 18 | RED |
| X12A | 18 | RED |
| X21 | 18 | GRAY |

CIRCUITS

| CIR | GA | COLOR |
|---|---|---|
| A1 | 12 | RED |
| B1 | 18 | VIOLET WITH TRACER |
| B1A | 18 | VIOLET WITH TRACER |
| B2 | 18 | VIOLET |
| C1 | 16 | BLACK WITH TRACER |
| C1A | 16 | LIGHT GREEN |
| C2 | 18 | DARK BLUE |
| C4 | 16 | BROWN |
| C4A | 16 | BROWN |
| C5 | 16 | DARK GREEN |
| C5A | 16 | DARK GREEN |
| C5B | 16 | DARK GREEN |
| C6 | 16 | LIGHT GREEN |
| C6A | 16 | LIGHT GREEN |
| C7 | 16 | TAN |
| C8 | 16 | DARK GREEN |
| C9 | 16 | BROWN |
| D1 | 18 | BLACK |
| D2 | 18 | RED |
| D2A | 18 | RED |
| D3 | 18 | PINK |
| D4 | 18 | WHITE |
| D4A | 18 | WHITE |
| D5 | 18 | TAN |
| D5A | 18 | TAN |
| D6 | 18 | LIGHT GREEN |
| DC6A | 18 | LIGHT GREEN |
| D7 | 18 | BROWN |
| D7A | 18 | BROWN |
| D8 | 18 | DARK GREEN |
| D8A | 18 | DARK GREEN |
| D9 | 18 | TAN |
| D10 | 18 | LIGHT GREEN |
| E1 | 18 | TAN |
| E2 | 18 | ORANGE |
| E2A | 18 | ORANGE |
| E2B | 18 | ORANGE |
| E2C | 18 | ORANGE |
| E2D | 18 | ORANGE |
| E2E | 18 | ORANGE |
| E2F | 18 | ORANGE |
| E2G | 18 | ORANGE |
| E2J | 18 | ORANGE |
| E2K | 18 | ORANGE |
| E2L | 18 | ORANGE |
| G1 | 18 | BLACK |
| G2 | 18 | VIOLET |
| G4 | 18 | DARK BLUE |
| G5 | 18 | DARK BLUE WITH TRACER |
| G6 | 18 | GRAY |
| H3 | 18 | BLACK WITH TRACER |
| H3A | 18 | BLACK |
| J1 | 12 | RED |
| J2 | 16 | DARK BLUE WITH TRACER |
| J3 | 14 | BROWN |
| L1 | 16 | BLACK WITH TRACER |
| L2 | 16 | LIGHT GREEN |
| L3 | 18 | RED |
| L4 | 18 | BLACK |
| L5 | 18 | RED |
| L6 | 18 | YELLOW WITH TRACER |
| L7 | 18 | BLACK |
| L8 | 18 | PINK |
| M1 | 18 | PINK |
| M1A | 18 | PINK |
| M1B | 18 | PINK |
| M2 | 18 | YELLOW |
| M2A | 18 | YELLOW |
| M2B | 18 | YELLOW |
| M2C | 18 | YELLOW |
| M2D | 18 | YELLOW |
| M2E | 18 | YELLOW |
| M2F | 18 | YELLOW |
| M3 | 18 | PINK |
| M3A | 18 | PINK |
| M5 | 18 | PINK |
| M5A | 18 | PINK |
| P1 | 18 | LIGHT BLUE |
| P2 | 18 | LIGHT BLUE |
| Q1 | 12 | RED |
| Q2 | 12 | BLACK |
| Q2A | 14 | BLACK |
| Q3 | 14 | RED WITH TRACER |
| Q4 | 14 | BLACK |
| R6 | 12 | BLACK |

NN684

MyMopar.com

| CIRCUITS | | |
|---|---|---|
| CIR | GA | COLOR |
| B2 | 18 | VIOLET |
| B2A | 18 | VIOLET |
| B2B | 18 | VIOLET |
| C11 | 18 | BLACK |
| C12 | 20 | WHITE |
| C13 | 18 | BLACK |
| C13A | 14 | BLACK |
| C14 | 14 | BLACK |
| D7 | 18 | BROWN |
| D7A | 18 | BROWN |
| D8 | 18 | DARK GREEN |
| G4 | 18 | DARK BLUE |
| L7 | 18 | BLACK |
| L7A | 18 | BLACK |
| L7B | 18 | BLACK |
| L7C | 18 | BLACK |
| L7D | 18 | BLACK |
| L7E | 18 | BLACK |
| M1 | 18 | PINK |
| M1A | 18 | PINK |
| M1B | 18 | PINK |
| M1C | 18 | PINK |
| M1D | 18 | PINK |
| M1E | 18 | PINK |
| M1F | 18 | PINK |
| M1G | 18 | PINK |
| M1H | 18 | PINK |
| M2 | 18 | YELLOW |
| M2A | 18 | YELLOW |
| M2B | 18 | YELLOW |
| M2C | 18 | YELLOW |
| M2D | 18 | YELLOW |
| M2E | 18 | YELLOW |
| M2F | 18 | YELLOW |
| M2G | 18 | YELLOW |
| M2H | 18 | YELLOW |
| M2J | 18 | YELLOW |
| M2K | 18 | YELLOW |
| M11 | 18 | BLACK |
| M11A | 18 | BLACK |
| M12 | 18 | BLACK |
| T1 | 12 | RED |
| T2 | 12 | BROWN |
| T2A | 12 | BROWN |
| T3 | 12 | YELLOW |
| T3A | 12 | YELLOW |
| T4 | 12 | BLACK |

NN472

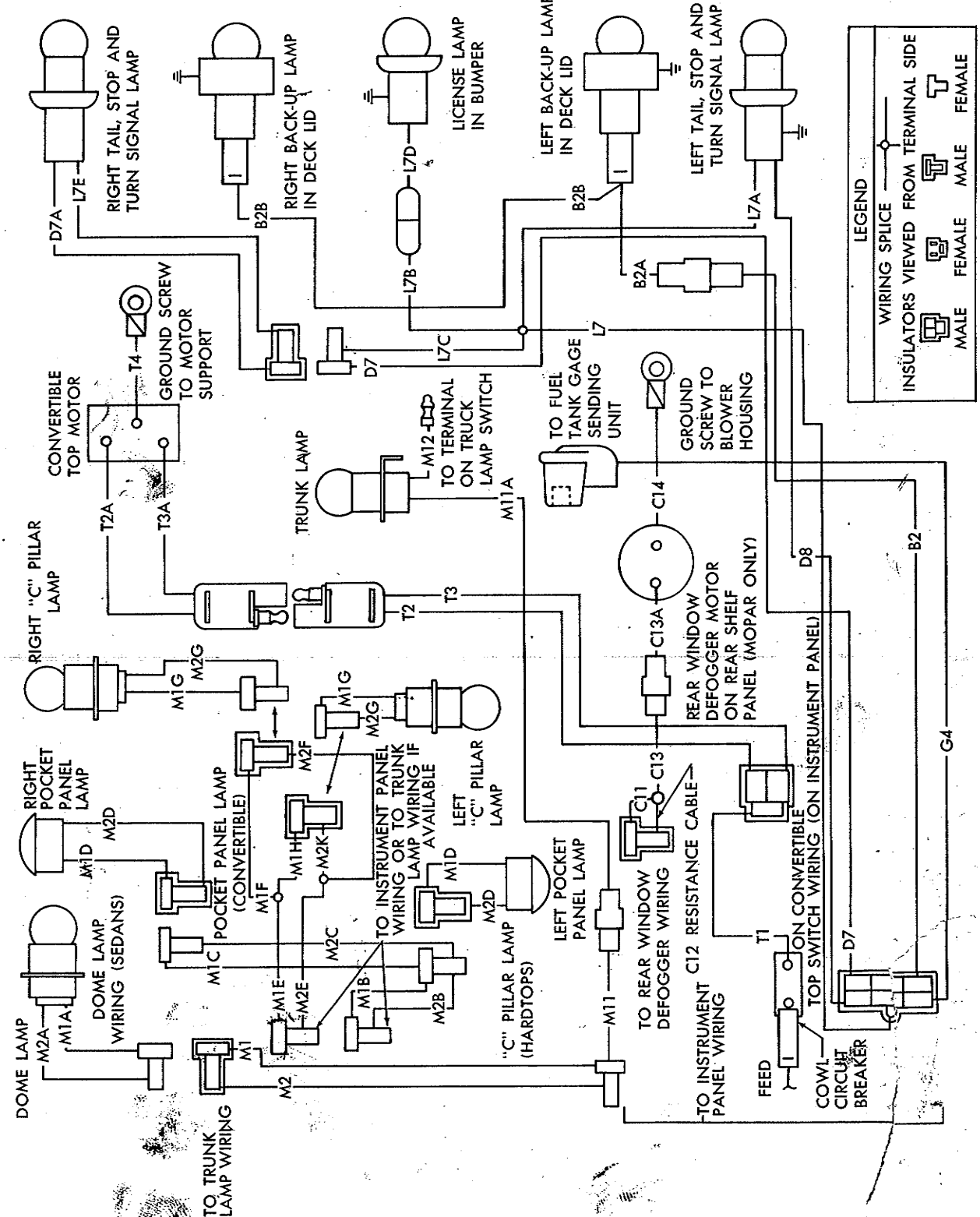


*Fig. 3—Body Wiring (Except Station Wagon) Belvedere and Satellite Models*

MyMopar.com

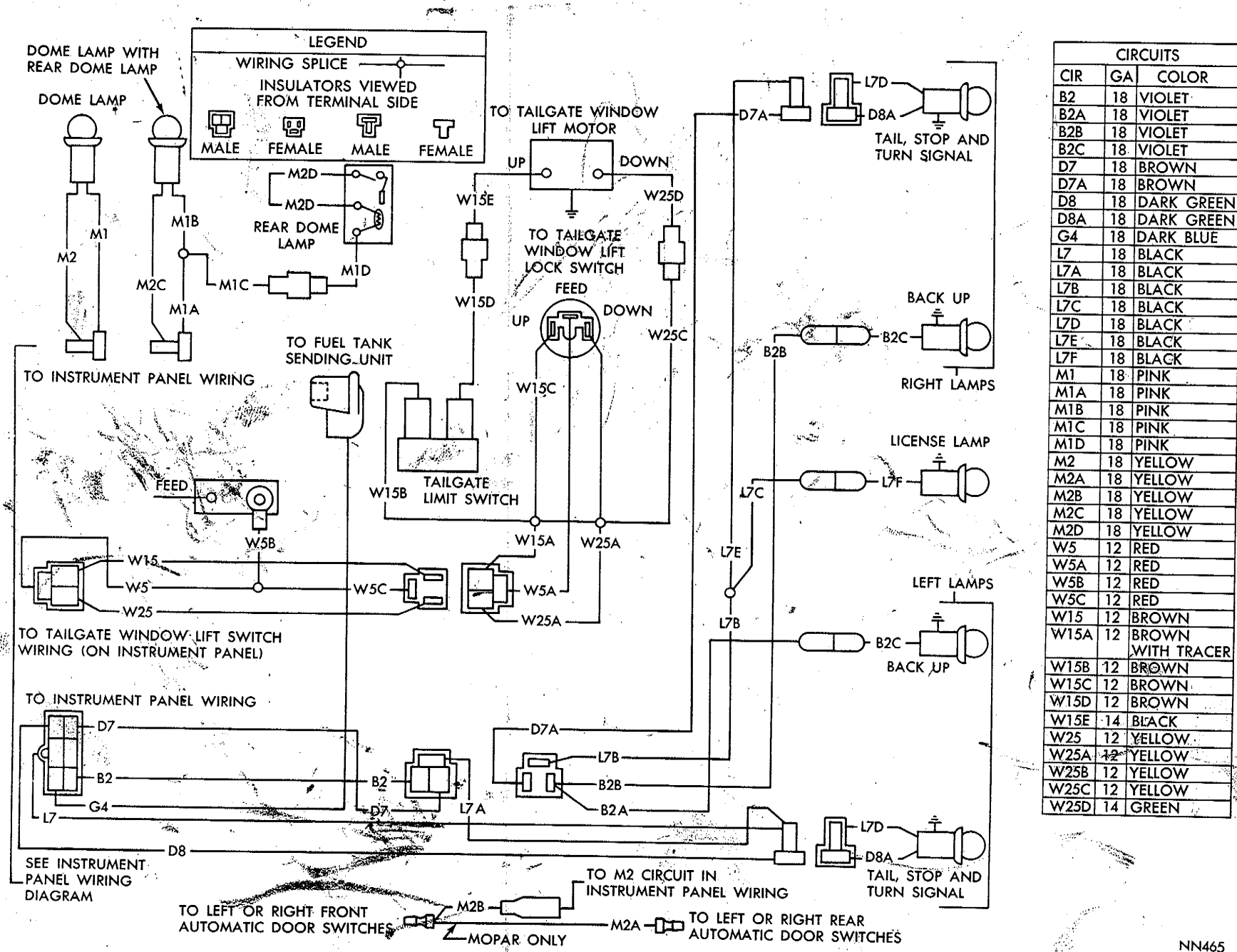


| CIRCUITS | | |
|---|---|---|
| CIR | GA | COLOR |
| B2 | 18 | VIOLET |
| B2A | 18 | VIOLET |
| B2B | 18 | VIOLET |
| B2C | 18 | VIOLET |
| D7 | 18 | BROWN |
| D7A | 18 | BROWN |
| D8 | 18 | DARK GREEN |
| D8A | 18 | DARK GREEN |
| G4 | 18 | DARK BLUE |
| L7 | 18 | BLACK |
| L7A | 18 | BLACK |
| L7B | 18 | BLACK |
| L7C | 18 | BLACK |
| L7D | 18 | BLACK |
| L7E | 18 | BLACK |
| L7F | 18 | BLACK |
| M1 | 18 | PINK |
| M1A | 18 | PINK |
| M1B | 18 | PINK |
| M1C | 18 | PINK |
| M1D | 18 | PINK |
| M2 | 18 | YELLOW |
| M2A | 18 | YELLOW |
| M2B | 18 | YELLOW |
| M2C | 18 | YELLOW |
| M2D | 18 | YELLOW |
| W5 | 12 | RED |
| W5A | 12 | RED |
| W5B | 12 | RED |
| W5C | 12 | RED |
| W15 | 12 | BROWN |
| W15A | 12 | BROWN WITH TRACER |
| W15B | 12 | BROWN |
| W15C | 12 | BROWN |
| W15D | 12 | BROWN |
| W15E | 14 | BLACK |
| W25 | 12 | YELLOW |
| W25A | 12 | YELLOW |
| W25B | 12 | YELLOW |
| W25C | 12 | YELLOW |
| W25D | 14 | GREEN |

***Fig. 4—Body Wiring—(Station Wagon—Belvedere Models***



MyMopar.com

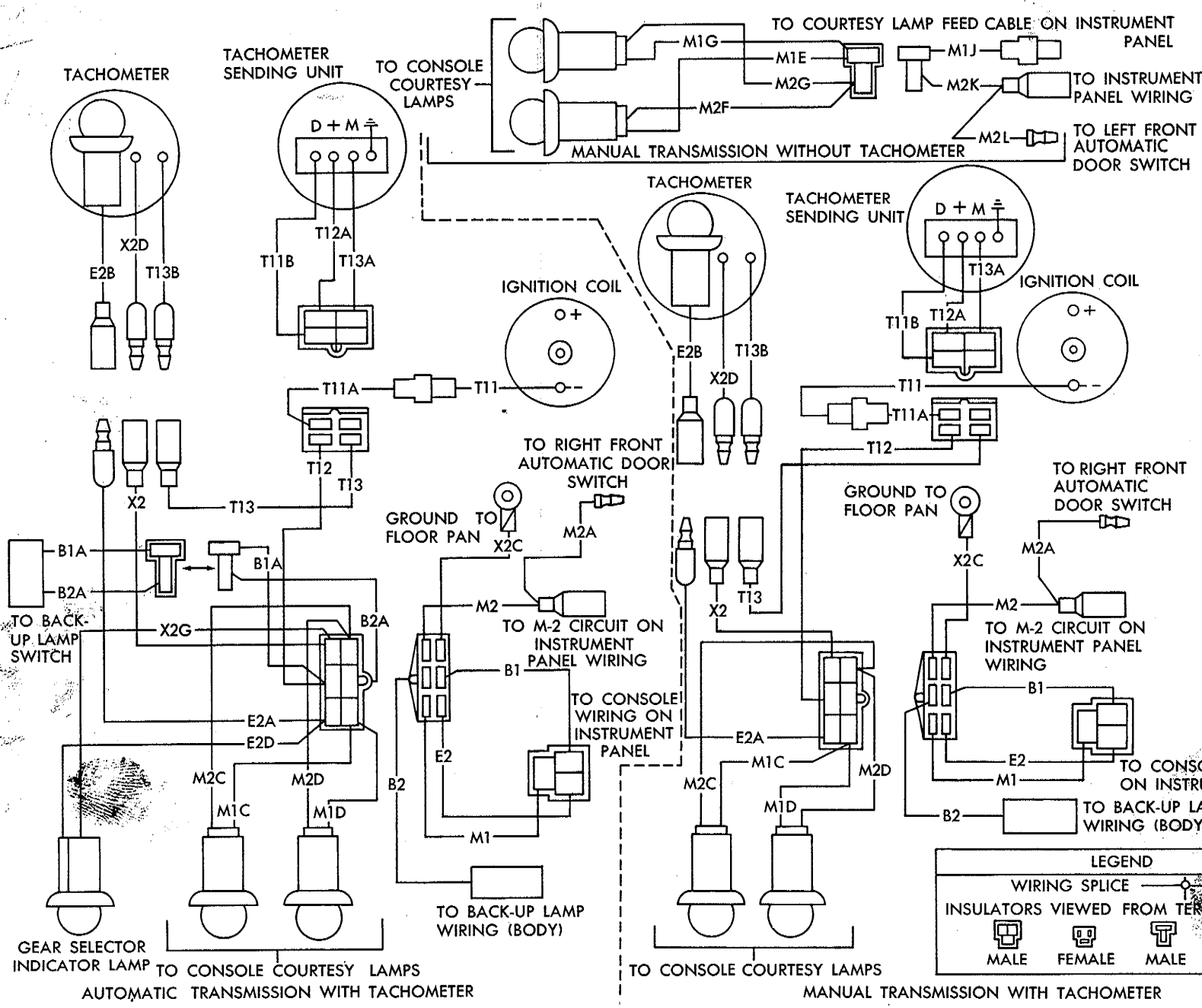


| CIRCUITS | | |
|---|---|---|
| CIR | GA | COLOR |
| B1 | 18 | VIOLET WITH TRACER |
| B1A | 18 | VIOLET WITH TRACER |
| B2 | 18 | VIOLET |
| B2A | 18 | VIOLET |
| E2 | 18 | ORANGE |
| E2A | 18 | ORANGE |
| E2B | 18 | ORANGE |
| E2D | 18 | ORANGE |
| M1 | 18 | PINK |
| M1C | 18 | PINK |
| M1D | 18 | PINK |
| M1E | 18 | PINK |
| M1G | 18 | PINK |
| M1J | 18 | PINK |
| M2 | 18 | YELLOW |
| M2A | 18 | YELLOW |
| M2C | 18 | YELLOW |
| M2D | 18 | YELLOW |
| M2F | 18 | YELLOW |
| M2G | 18 | YELLOW |
| M2K | 18 | YELLOW |
| M2L | 18 | YELLOW |
| T11 | 18 | DARK GREEN |
| T11A | 18 | DARK GREEN |
| T11B | 18 | GRAY |
| T12 | 18 | VIOLET WITH TRACER |
| T12A | 18 | VIOLET |
| T13 | 18 | YELLOW |
| T13A | 18 | YELLOW |
| T13B | 18 | YELLOW |
| X2 | 18 | BLACK |
| X2C | 18 | BLACK |
| X2D | 18 | BLACK |
| X2G | 18 | BLACK |

***Fig. 5—Console Wiring—Belvedere and Satellite Models***

MyMopar.com

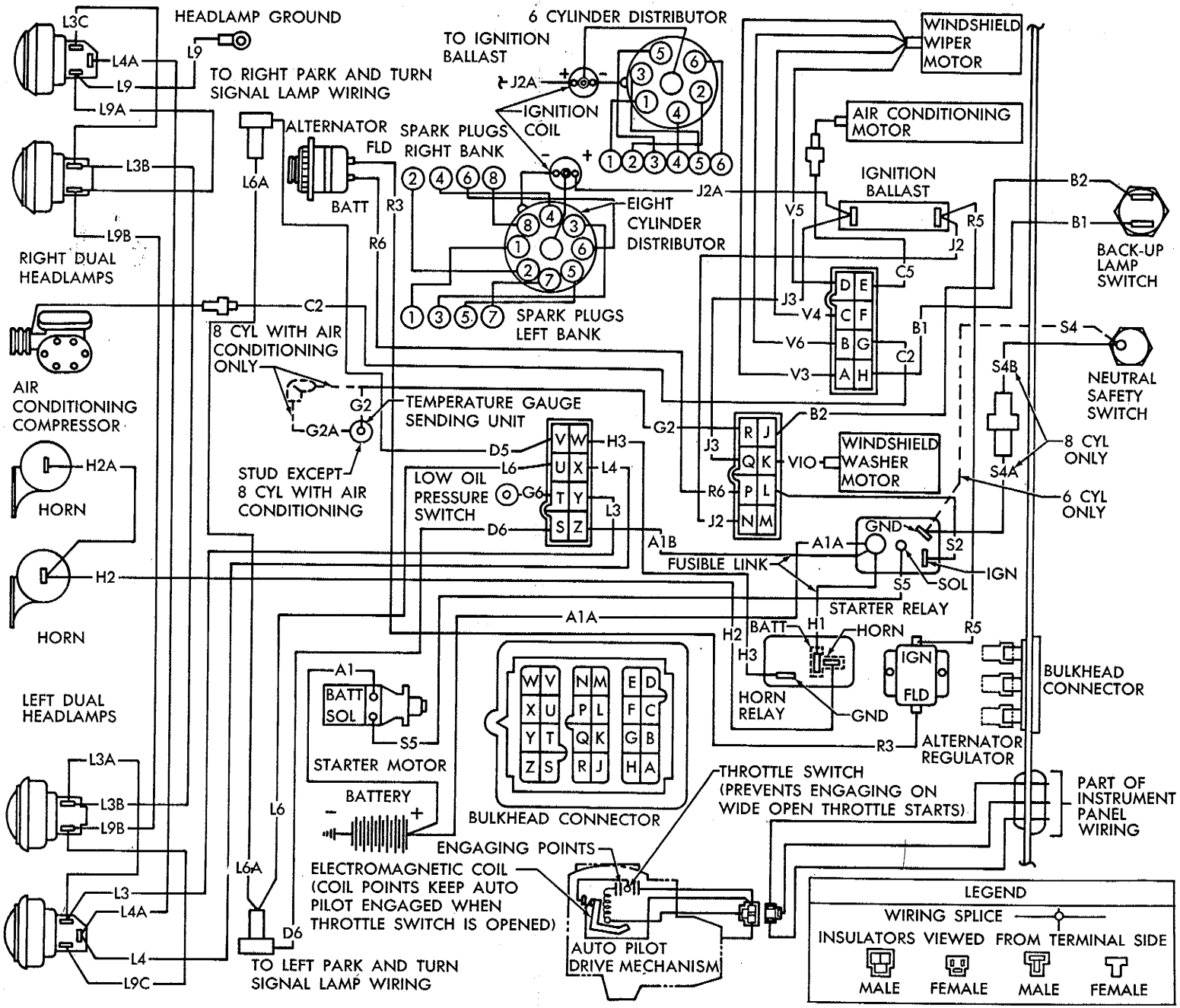


| CIRCUITS | | |
|---|---|---|
| CIR | GA | COLOR |
| A1 | 6B | RED |
| A1 | 6B | RED |
| A1A | 10 | BLACK |
| A1B | 16 | DARK BLUE |
| B1 | 18 | VIOLET |
| B2 | 18 | VIOLET |
| C2 | 18 | DARK BLUE |
| C5 | 16 | DARK GREEN |
| D5 | 18 | TAN |
| D6 | 18 | LIGHT GREEN |
| G2 | 18 | VIOLET |
| G2A | 18 | VIOLET |
| G2A | 18 | VIOLET |
| G6 | 18 | GRAY |
| H1 | 20 | BLACK |
| H2 | 16 | DARK GREEN |
| H2A | 16 | DARK GREEN |
| H3 | 18 | BLACK WITH TRACER |
| J2 | 16 | DARK BLUE WITH TRACER |
| J2A | 14 | DARK BLUE |
| J3 | 14 | BROWN |
| L3 | 16 | RED |
| L3A | 16 | RED |
| L3B | 16 | RED |
| L3C | 16 | RED |
| L4 | 16 | BLACK |
| L4A | 16 | BLACK |
| L6 | 18 | YELLOW WITH TRACER |
| L6A | 18 | YELLOW |
| L9 | 16 | BLACK |
| L9A | 16 | WHITE |
| L9B | 16 | WHITE |
| L9C | 16 | WHITE |
| R3 | 18 | DARK GREEN |
| R5 | 18 | DARK BLUE |
| R6 | 12 | BLACK |
| S2 | 18 | YELLOW |
| S4 | 16 | BROWN |
| S4A | 18 | BROWN |
| S4B | 16 | BROWN |
| S5 | 12 | BROWN |
| V3 | 16 | BROWN |
| V4 | 18 | RED |
| V5 | 18 | DARK GREEN |
| V6 | 18 | DARK BLUE |
| V10 | 18 | BROWN |

***Fig. 6—Engine Compartment Wiring—Fury Models***



MyMopar.com

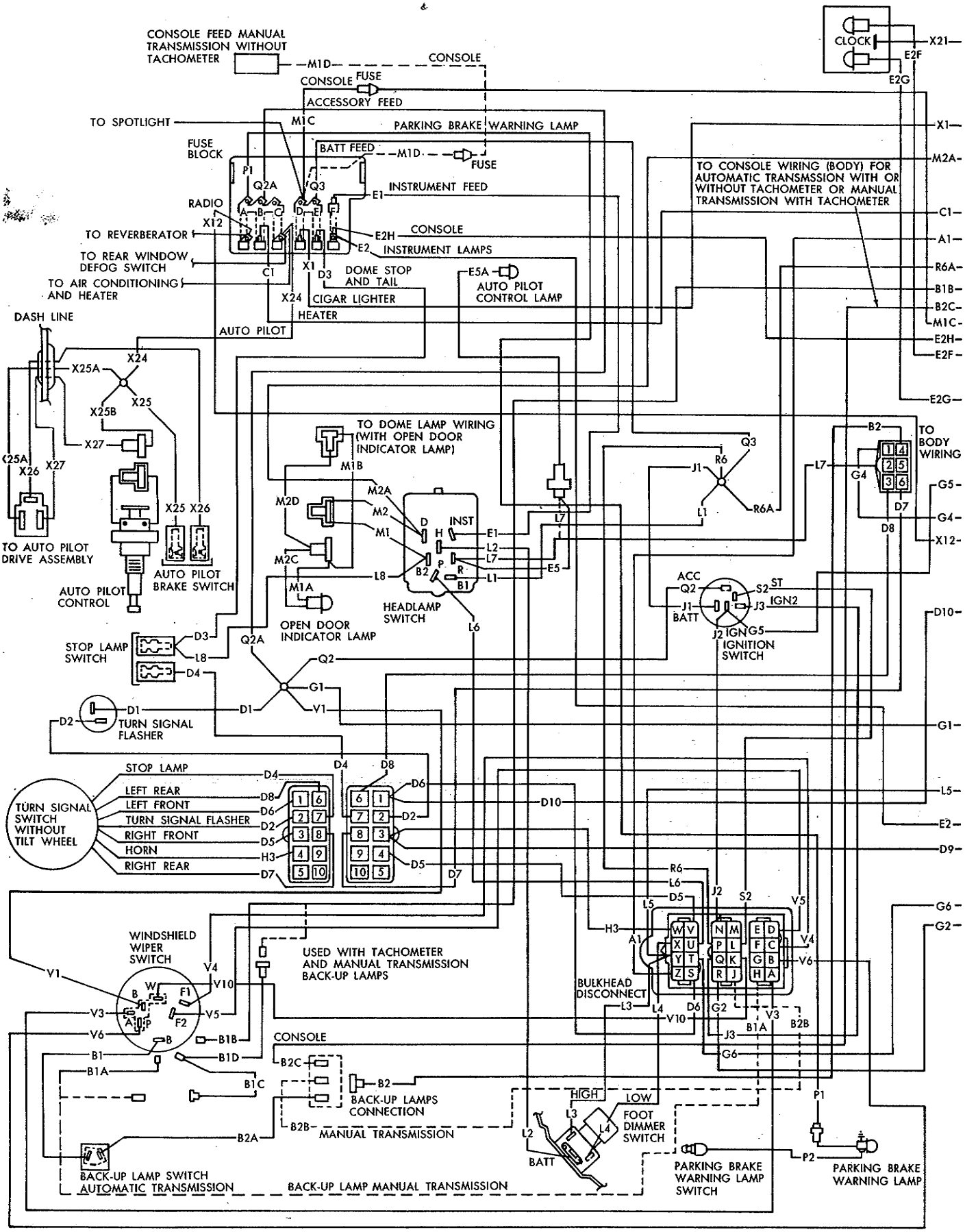


***Fig. 7—Instrument Panel Wiring—Fury Models***

MyMopar.com

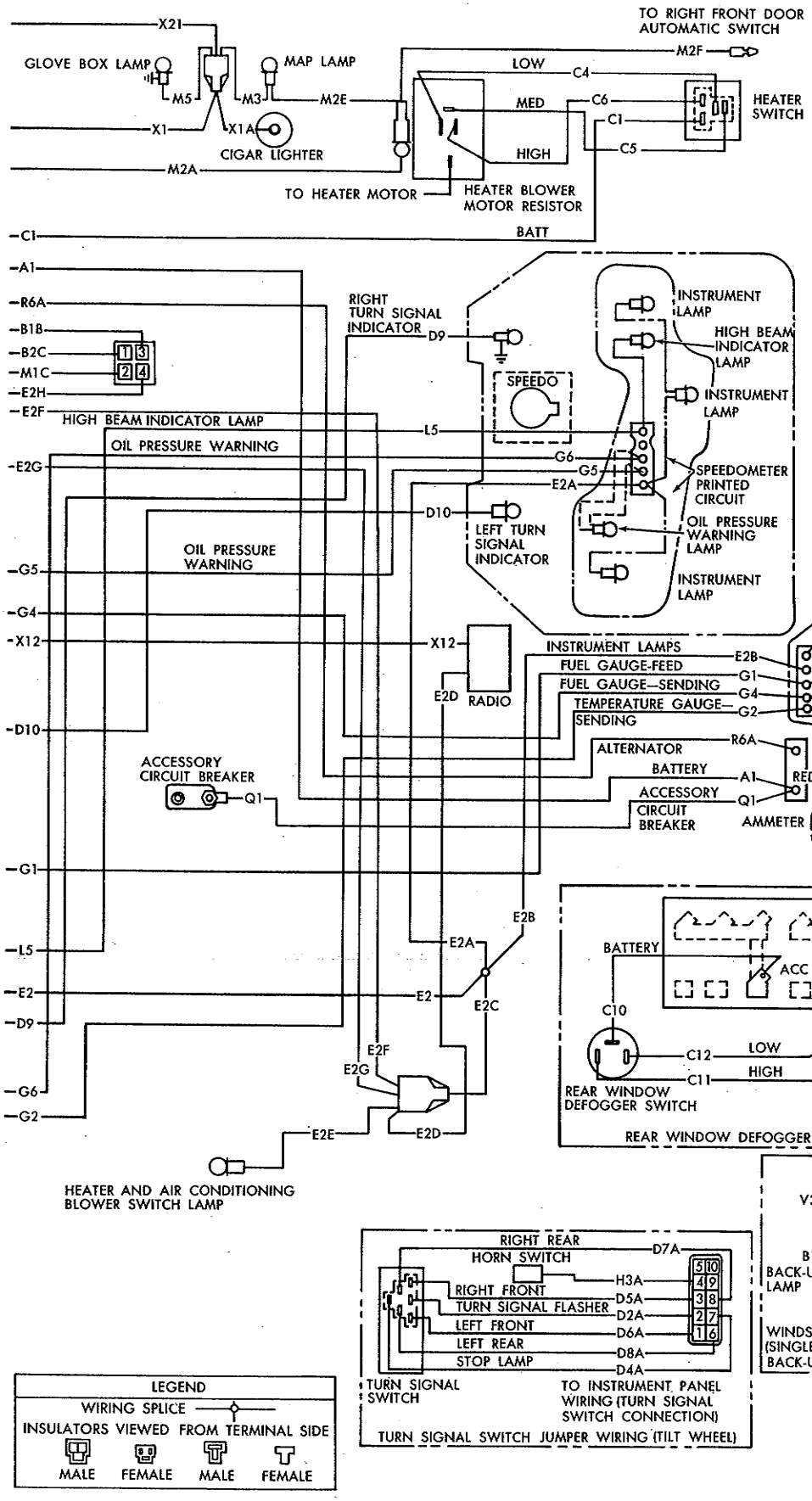


| CIRCUITS | | |
|---|---|---|
| CIR | GA | COLOR |
| A1 | 12 | RED |
| B1 | 18 | VIOLET WITH TRACER |
| B1A | 18 | VIOLET WITH TRACER |
| B1B | 18 | VIOLET WITH TRACER |
| B1C | 18 | WHITE |
| B1D | 18 | WHITE |
| B2 | 18 | VIOLET |
| B2A | 18 | VIOLET |
| B2B | 18 | VIOLET |
| B2C | 18 | VIOLET |
| C1 | 14 | BLACK |
| C1A | 16 | LIGHT GREEN |
| C2 | 18 | DARK BLUE |
| C4 | 16 | BROWN |
| C4A | 16 | BROWN |
| C5 | 16 | DARK GREEN |
| C5A | 16 | DARK GREEN |
| C5B | 16 | DARK GREEN |
| C6 | 16 | LIGHT GREEN |
| C6A | 16 | LIGHT GREEN |
| C7 | 16 | TAN |
| C8 | 16 | DARK GREEN |
| C9 | 16 | BROWN |
| C10 | 18 | LIGHT GREEN |
| C11 | 18 | BLACK |
| C12 | 18 | WHITE |
| C20 | 16 | BROWN |
| C22 | 16 | DARK GREEN |
| C23 | 16 | LIGHT GREEN |
| C23A | 16 | LIGHT GREEN |
| D1 | 18 | BLACK |
| D2 | 18 | RED |

| CIRCUITS | | |
|---|---|---|
| CIR | GA | COLOR |
| D2A | 18 | RED |
| D3 | 18 | PINK |
| D4 | 18 | WHITE |
| D4A | 18 | WHITE |
| D5 | 18 | TAN |
| D5A | 18 | TAN |
| D6 | 18 | LIGHT GREEN |
| D6A | 18 | LIGHT GREEN |
| D7 | 18 | BROWN |
| D7A | 18 | BROWN |
| D8 | 18 | DARK GREEN |
| D8A | 18 | DARK GREEN |
| D9 | 18 | TAN |
| D10 | 18 | LIGHT GREEN |
| E1 | 18 | TAN |
| E2 | 18 | ORANGE |
| E2A | 18 | ORANGE |
| E2B | 18 | ORANGE |
| E2C | 18 | ORANGE |
| E2D | 18 | ORANGE |
| E2E | 18 | ORANGE |
| E2F | 18 | ORANGE |
| E2G | 18 | ORANGE |
| E2H | 18 | ORANGE |
| E5 | 18 | ORANGE WITH TRACER |
| E5A | 18 | ORANGE WITH TRACER |
| G1 | 18 | BLACK |
| G2 | 18 | VIOLET |
| G4 | 18 | DARK BLUE |
| G5 | 18 | DARK BLUE |
| G6 | 18 | GRAY |
| H3 | 18 | BLACK WITH TRACER |
| H3A | 18 | BLACK |
| J1 | 12 | RED |
| J2 | 16 | DARK BLUE WITH TRACER |
| J3 | 14 | BROWN |
| L1 | 16 | BLACK WITH TRACER |
| L2 | 16 | LIGHT GREEN |
| L3 | 16 | RED |
| L4 | 16 | BLACK |
| L5 | 18 | RED |
| L6 | 18 | YELLOW WITH TRACER |
| L7 | 18 | BLACK |
| L8 | 18 | PINK |
| M1 | 18 | PINK |
| M1A | 18 | PINK |
| M1B | 18 | PINK |
| M1C | 16 | PINK |
| M1D | 16 | PINK |
| M2 | 18 | YELLOW |
| M2A | 18 | YELLOW |
| M2C | 18 | YELLOW |
| M2D | 18 | YELLOW |
| M2E | 18 | YELLOW |
| M2F | 18 | YELLOW |
| M3 | 18 | PINK |
| M5 | 18 | PINK |
| P1 | 18 | DARK BLUE |
| P2 | 18 | BLACK |
| Q1 | 12 | RED |
| Q2 | 12 | BLACK |
| Q2A | 12 | BLACK |
| Q3 | 14 | RED WITH TRACER |
| R6 | 12 | BLACK |
| R6A | 12 | BLACK |
| S2 | 18 | YELLOW |
| T1 | 12 | RED |
| T2 | 12 | BROWN |
| T3 | 12 | YELLOW |
| V1 | 16 | PINK |
| V3 | 16 | BROWN |
| V4 | 18 | RED |
| V5 | 18 | DARK GREEN |
| V6 | 18 | DARK BLUE |
| V10 | 18 | BROWN WITH TRACER |
| X1 | 16 | RED |
| X1A | 16 | RED |
| X12 | 18 | RED |
| X21 | 18 | GRAY |
| X24 | 18 | RED |
| X25 | 18 | RED |
| X25A | 18 | RED |
| X25B | 18 | RED |
| X26 | 18 | LIGHT BLUE |
| X27 | 18 | BLACK |

NN686

MyMopar.com

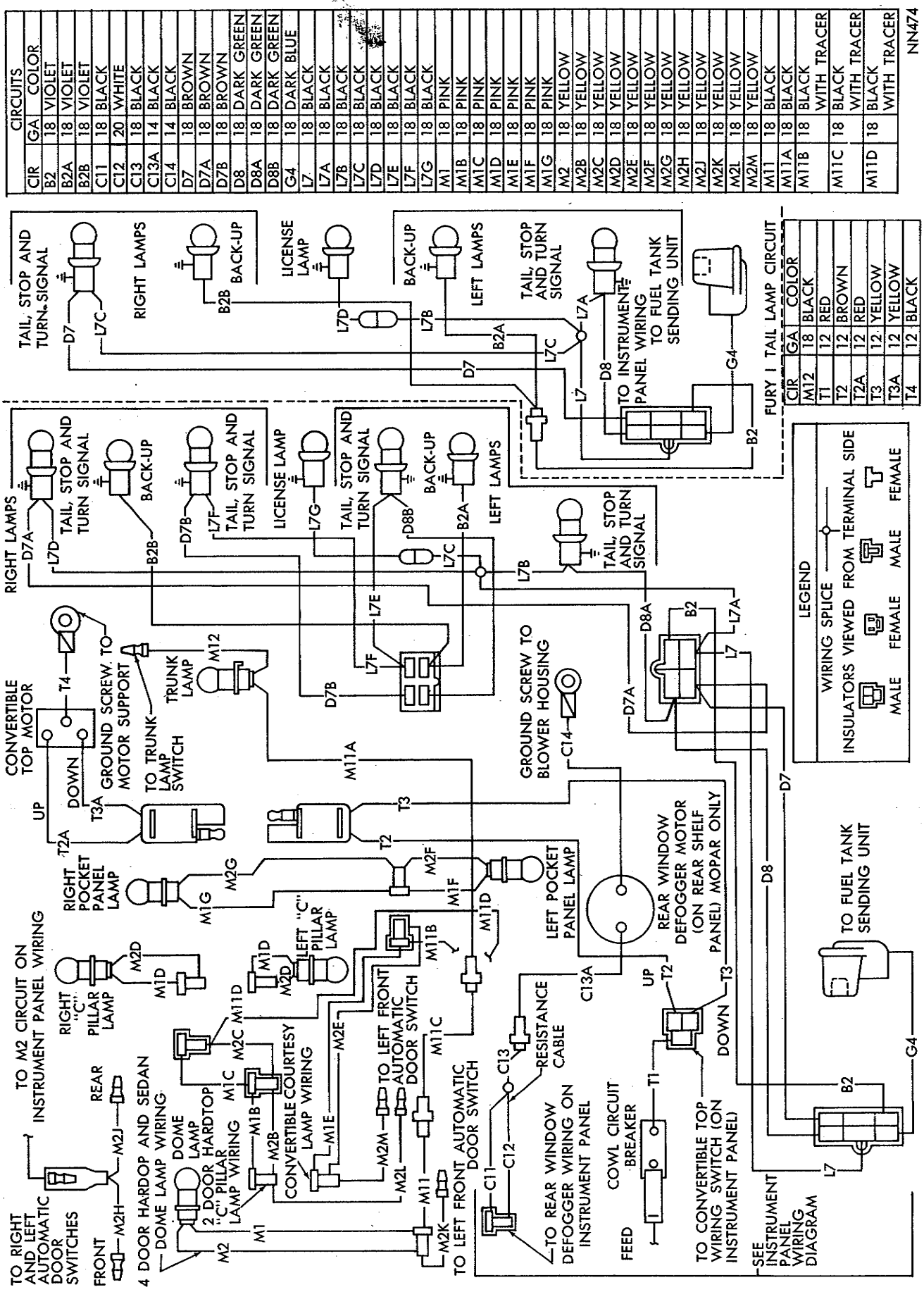


*Fig. 8—Body Wiring—(Except Station Wagon)—Fury Models*

MyMopar.com

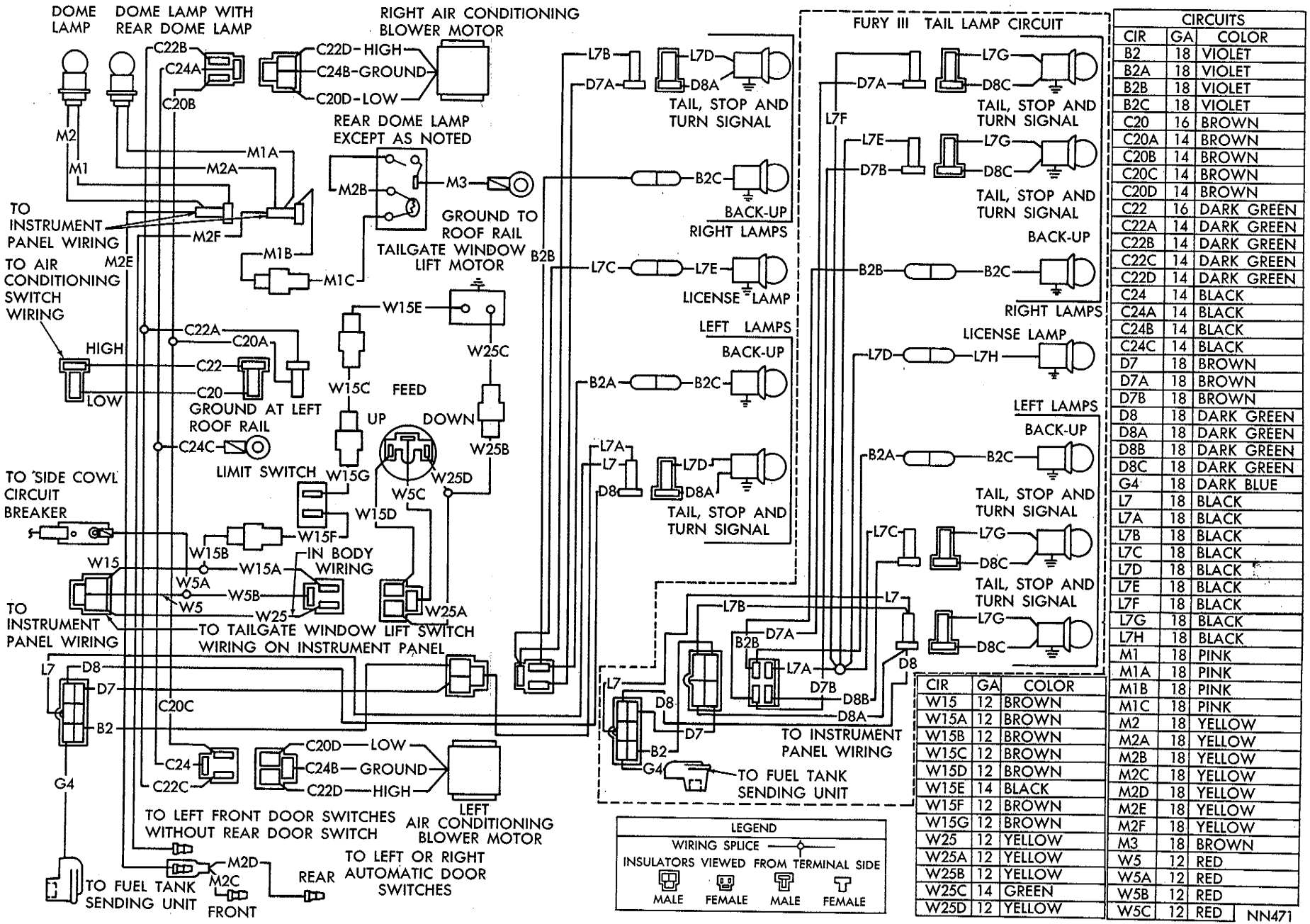


| CIRCUITS | | |
|---|---|---|
| CIR | GA | COLOR |
| B2 | 18 | VIOLET |
| B2A | 18 | VIOLET |
| B2B | 18 | VIOLET |
| B2C | 18 | VIOLET |
| C20 | 16 | BROWN |
| C20A | 14 | BROWN |
| C20B | 14 | BROWN |
| C20C | 14 | BROWN |
| C20D | 14 | BROWN |
| C22 | 16 | DARK GREEN |
| C22A | 14 | DARK GREEN |
| C22B | 14 | DARK GREEN |
| C22C | 14 | DARK GREEN |
| C22D | 14 | DARK GREEN |
| C24 | 14 | BLACK |
| C24A | 14 | BLACK |
| C24B | 14 | BLACK |
| C24C | 14 | BLACK |
| D7 | 18 | BROWN |
| D7A | 18 | BROWN |
| D7B | 18 | BROWN |
| D8 | 18 | DARK GREEN |
| D8A | 18 | DARK GREEN |
| D8B | 18 | DARK GREEN |
| D8C | 18 | DARK GREEN |
| G4 | 18 | DARK BLUE |
| L7 | 18 | BLACK |
| L7A | 18 | BLACK |
| L7B | 18 | BLACK |
| L7C | 18 | BLACK |
| L7D | 18 | BLACK |
| L7E | 18 | BLACK |
| L7F | 18 | BLACK |
| L7G | 18 | BLACK |
| L7H | 18 | BLACK |
| M1 | 18 | PINK |
| M1A | 18 | PINK |
| M1B | 18 | PINK |
| M1C | 18 | PINK |
| M2 | 18 | YELLOW |
| M2A | 18 | YELLOW |
| M2B | 18 | YELLOW |
| M2C | 18 | YELLOW |
| M2D | 18 | YELLOW |
| M2E | 18 | YELLOW |
| M2F | 18 | YELLOW |
| M3 | 18 | BROWN |
| W5 | 12 | RED |
| W5A | 12 | RED |
| W5B | 12 | RED |
| W5C | 12 | RED |

| | | |
|---|---|---|
| CIR | GA | COLOR |
| W15 | 12 | BROWN |
| W15A | 12 | BROWN |
| W15B | 12 | BROWN |
| W15C | 12 | BROWN |
| W15D | 12 | BROWN |
| W15E | 14 | BLACK |
| W15F | 12 | BROWN |
| W15G | 12 | BROWN |
| W25 | 12 | YELLOW |
| W25A | 12 | YELLOW |
| W25B | 12 | YELLOW |
| W25C | 14 | GREEN |
| W25D | 12 | YELLOW |

NN471

***Fig. 9—Body Wiring—(Station Wagon)—Fury Models***

MyMopar.com

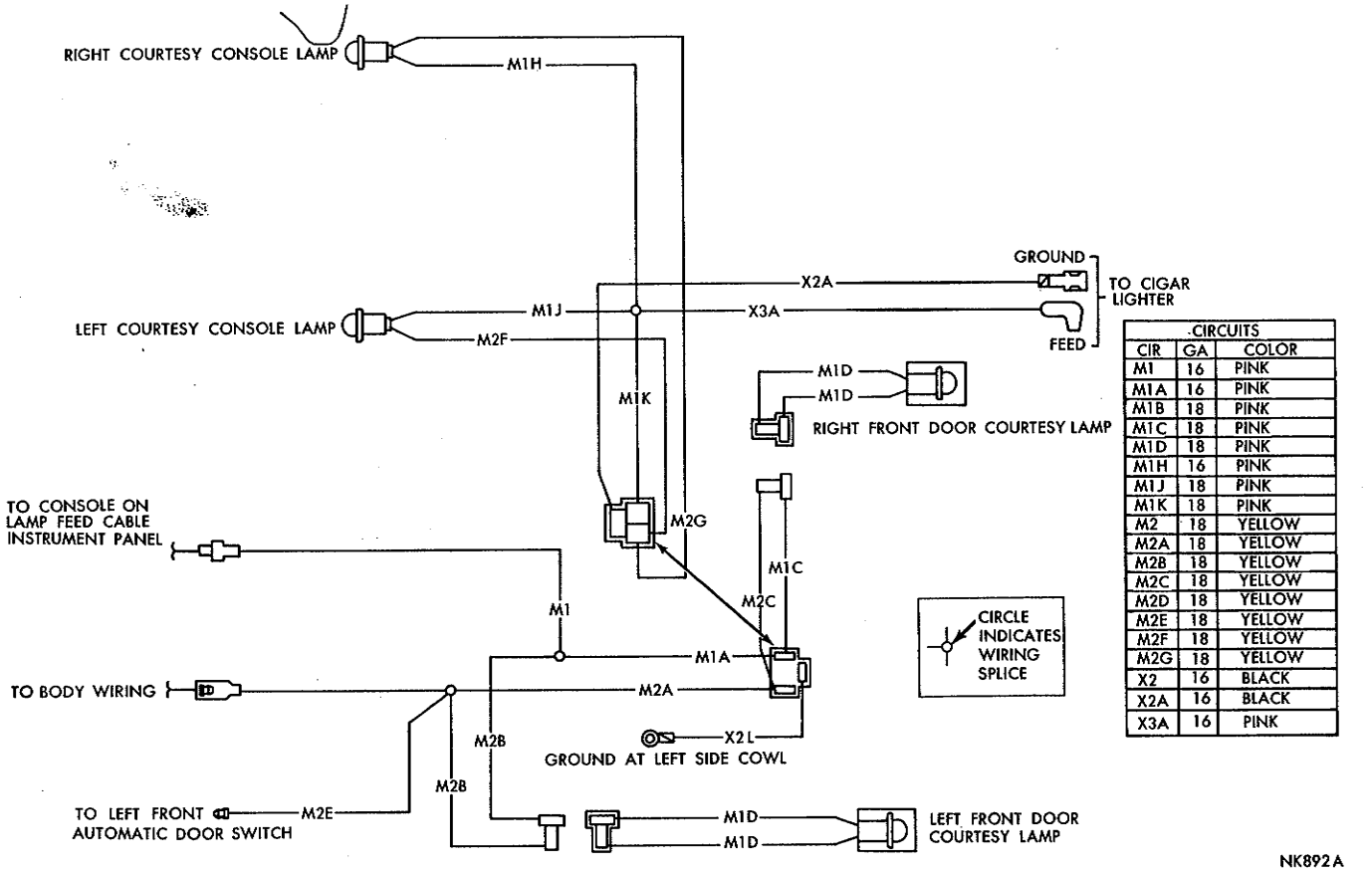


| CIRCUITS | | |
|---|---|---|
| CIR | GA | COLOR |
| M1 | 16 | PINK |
| M1A | 16 | PINK |
| M1B | 18 | PINK |
| M1C | 18 | PINK |
| M1D | 18 | PINK |
| M1H | 16 | PINK |
| M1J | 18 | PINK |
| M1K | 18 | PINK |
| M2 | 18 | YELLOW |
| M2A | 18 | YELLOW |
| M2B | 18 | YELLOW |
| M2C | 18 | YELLOW |
| M2D | 18 | YELLOW |
| M2E | 18 | YELLOW |
| M2F | 18 | YELLOW |
| M2G | 18 | YELLOW |
| X2 | 16 | BLACK |
| X2A | 16 | BLACK |
| X3A | 16 | PINK |

***Fig. 10—Console Wiring—Manual Transmission Without Tachometer—Fury Models***

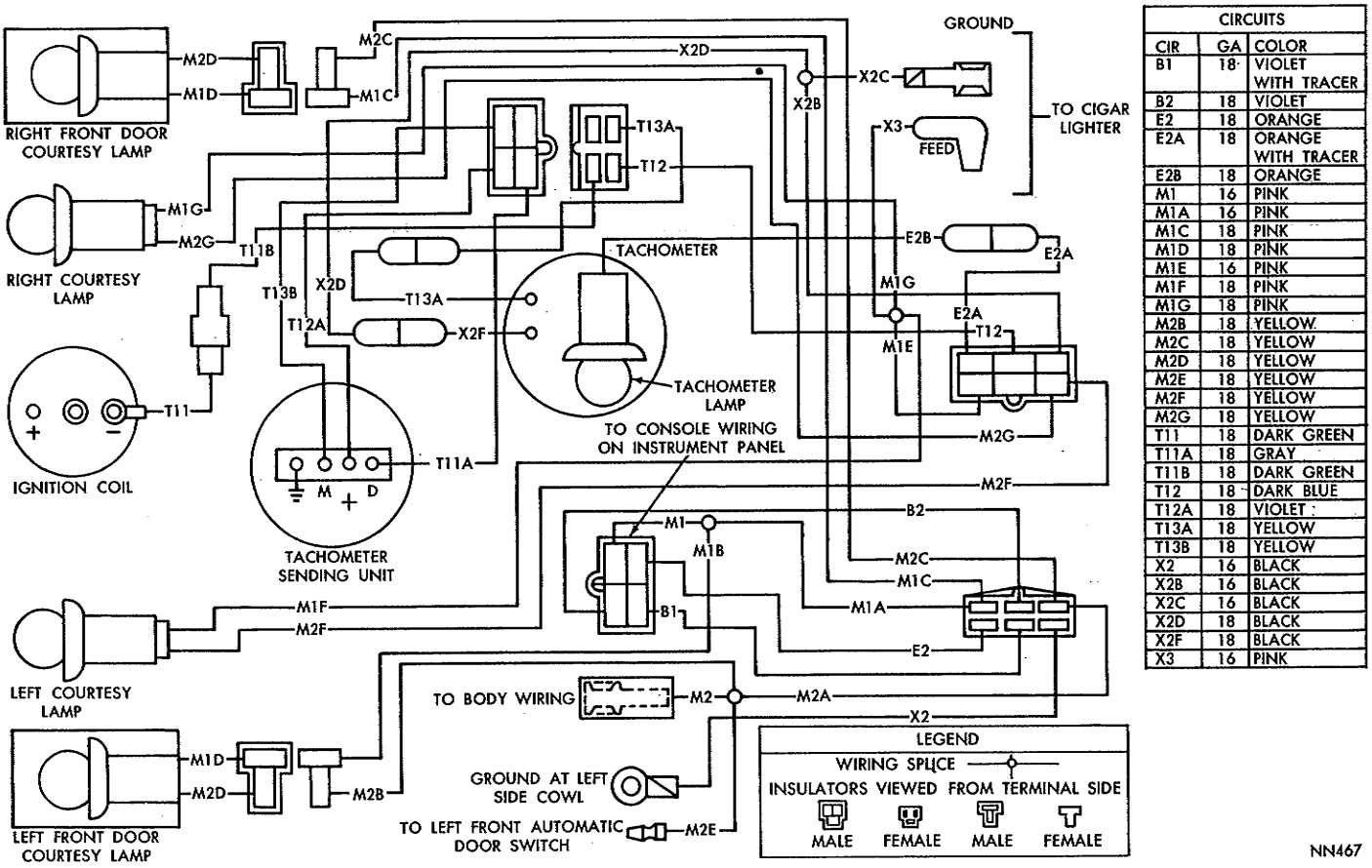


| CIRCUITS | | |
|---|---|---|
| CIR | GA | COLOR |
| B1 | 18 | VIOLET WITH TRACER |
| B2 | 18 | VIOLET |
| E2 | 18 | ORANGE |
| E2A | 18 | ORANGE WITH TRACER |
| E2B | 18 | ORANGE |
| M1 | 16 | PINK |
| M1A | 16 | PINK |
| M1C | 18 | PINK |
| M1D | 18 | PINK |
| M1E | 16 | PINK |
| M1F | 18 | PINK |
| M1G | 18 | PINK |
| M2B | 18 | YELLOW |
| M2C | 18 | YELLOW |
| M2D | 18 | YELLOW |
| M2E | 18 | YELLOW |
| M2F | 18 | YELLOW |
| M2G | 18 | YELLOW |
| T11 | 18 | DARK GREEN |
| T11A | 18 | GRAY |
| T11B | 18 | DARK GREEN |
| T12 | 18 | DARK BLUE |
| T12A | 18 | VIOLET |
| T13A | 18 | YELLOW |
| T13B | 18 | YELLOW |
| X2 | 16 | BLACK |
| X2B | 16 | BLACK |
| X2C | 16 | BLACK |
| X2D | 18 | BLACK |
| X2F | 18 | BLACK |
| X3 | 16 | PINK |

***Fig. 11—Console Wiring—Manual Transmission with Tachometer—Fury Models***

MyMopar.com

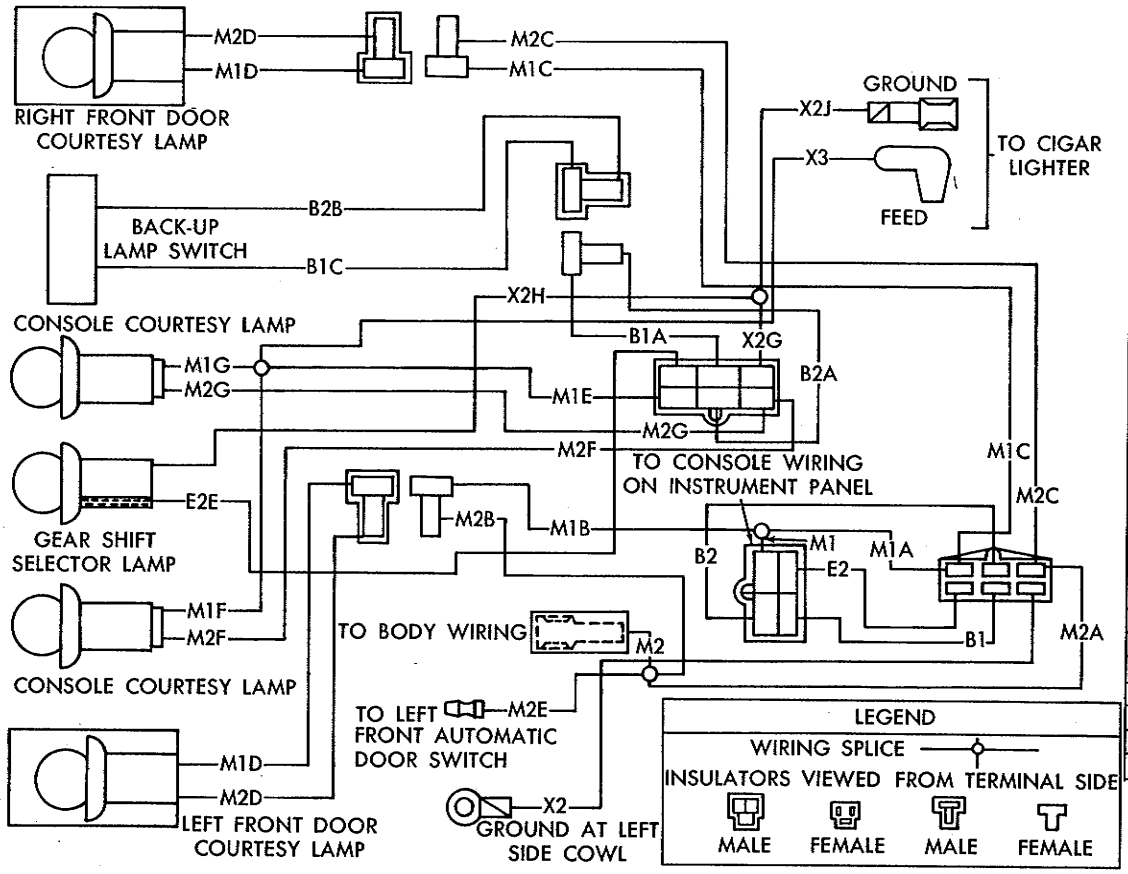


| CIRCUITS | | |
|---|---|---|
| CIR | GA | COLOR |
| B1 | 18 | VIOLET WITH TRACER |
| B1A | 18 | VIOLET WITH TRACER |
| B1C | 18 | VIOLET |
| B2 | 18 | VIOLET |
| B2A | 18 | VIOLET |
| B2B | 18 | VIOLET |
| E2 | 18 | ORANGE |
| E2E | 18 | ORANGE |
| M1 | 18 | PINK |
| M1A | 16 | PINK |
| M1B | 18 | PINK |
| M1C | 18 | PINK |
| M1D | 18 | PINK |
| M1E | 16 | PINK |
| M1F | 18 | PINK |
| M1G | 18 | PINK |
| M2 | 18 | YELLOW |
| M2A | 18 | YELLOW |
| M2B | 18 | YELLOW |
| M2C | 18 | YELLOW |
| M2D | 18 | YELLOW |
| M2E | 18 | YELLOW |
| M2F | 18 | YELLOW |
| M2G | 18 | YELLOW |
| X2G | 16 | BLACK |
| X2H | 18 | BLACK |
| X2J | 16 | BLACK |
| X3 | 16 | PINK |

***Fig. 12—Console Wiring—Automatic Transmission Without Tachometer—Fury Models***

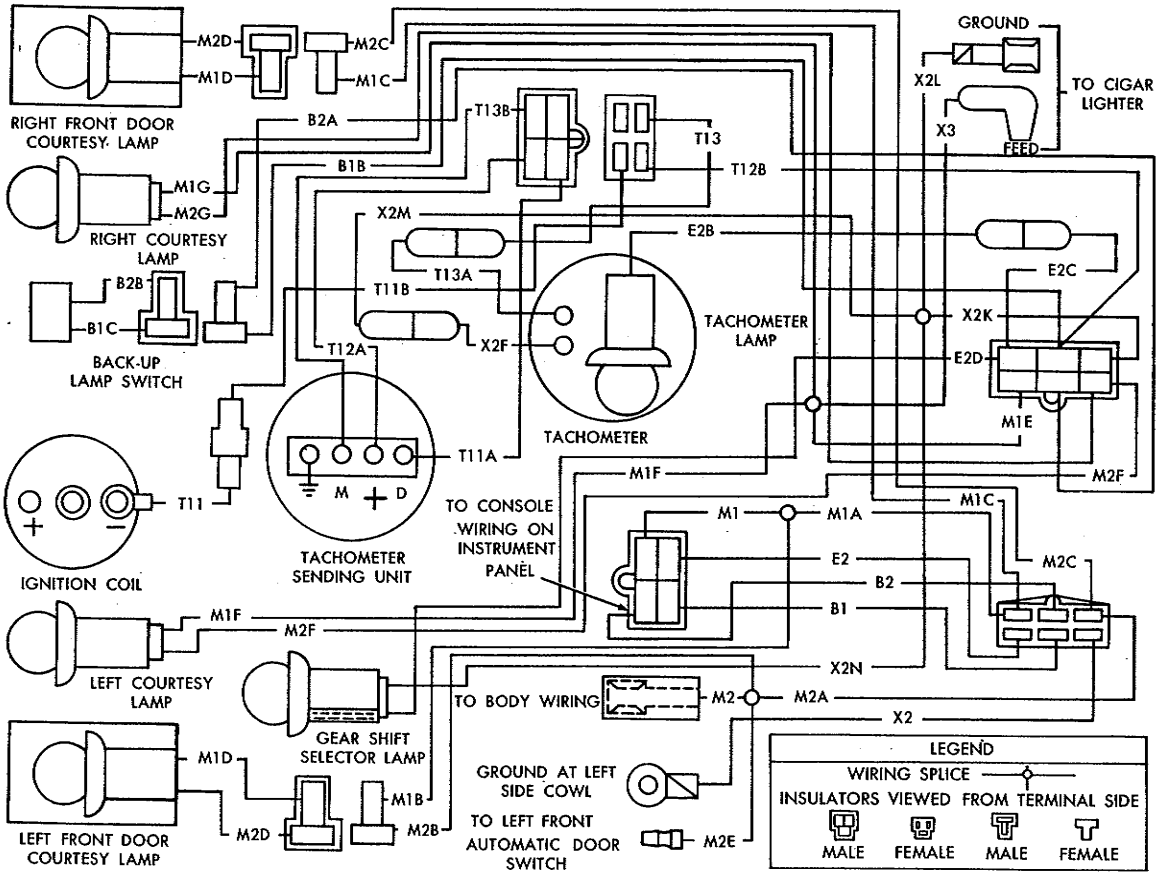


| CIRCUITS | | |
|---|---|---|
| CIR | GA | COLOR |
| B1B | 18 | VIOLET WITH TRACER |
| B1C | 18 | VIOLET |
| B2 | 18 | VIOLET |
| B2A | 18 | VIOLET |
| B2B | 18 | VIOLET |
| E2B | 18 | ORANGE |
| E2C | 18 | ORANGE |
| E2D | 18 | ORANGE |
| M1 | 16 | PINK |
| M1A | 16 | PINK |
| M1B | 18 | PINK |
| M1C | 18 | PINK |
| M1D | 18 | PINK |
| M1E | 16 | PINK |
| M1F | 18 | PINK |
| M1G | 18 | PINK |
| M2 | 18 | YELLOW |
| M2A | 18 | YELLOW |
| M2B | 18 | YELLOW |
| M2C | 18 | YELLOW |
| M2D | 18 | YELLOW |
| M2F | 18 | YELLOW |
| M2G | 18 | YELLOW |
| T11 | 18 | DARK GREEN |
| T11A | 18 | GRAY |
| T11B | 18 | DARK GREEN |
| T12A | 18 | VIOLET |
| T12B | 18 | DARK BLUE |
| T13 | 18 | YELLOW |
| T13A | 18 | YELLOW |
| T13B | 18 | YELLOW |
| X2 | 16 | BLACK |
| X2F | 18 | BLACK |
| X2K | 16 | BLACK |
| X2L | 16 | BLACK |
| X2M | 18 | BLACK |
| X2N | 18 | BLACK |

***Fig. 13—Console Wiring—Automatic Transmission With Tachometer—Fury Models***

MyMopar.com

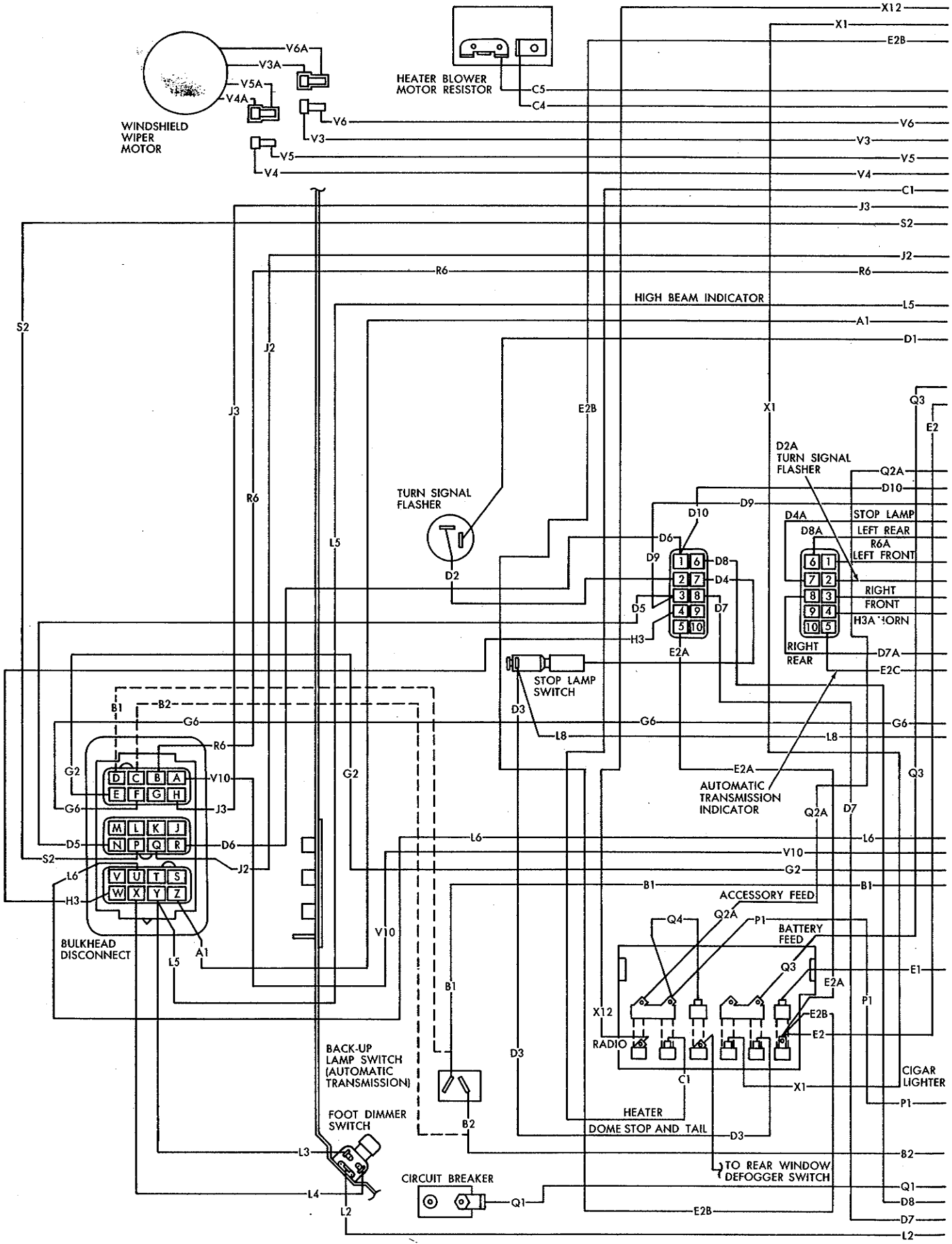


***Fig. 14—Instrument Panel Wiring—Valiant Models***

MyMopar.com

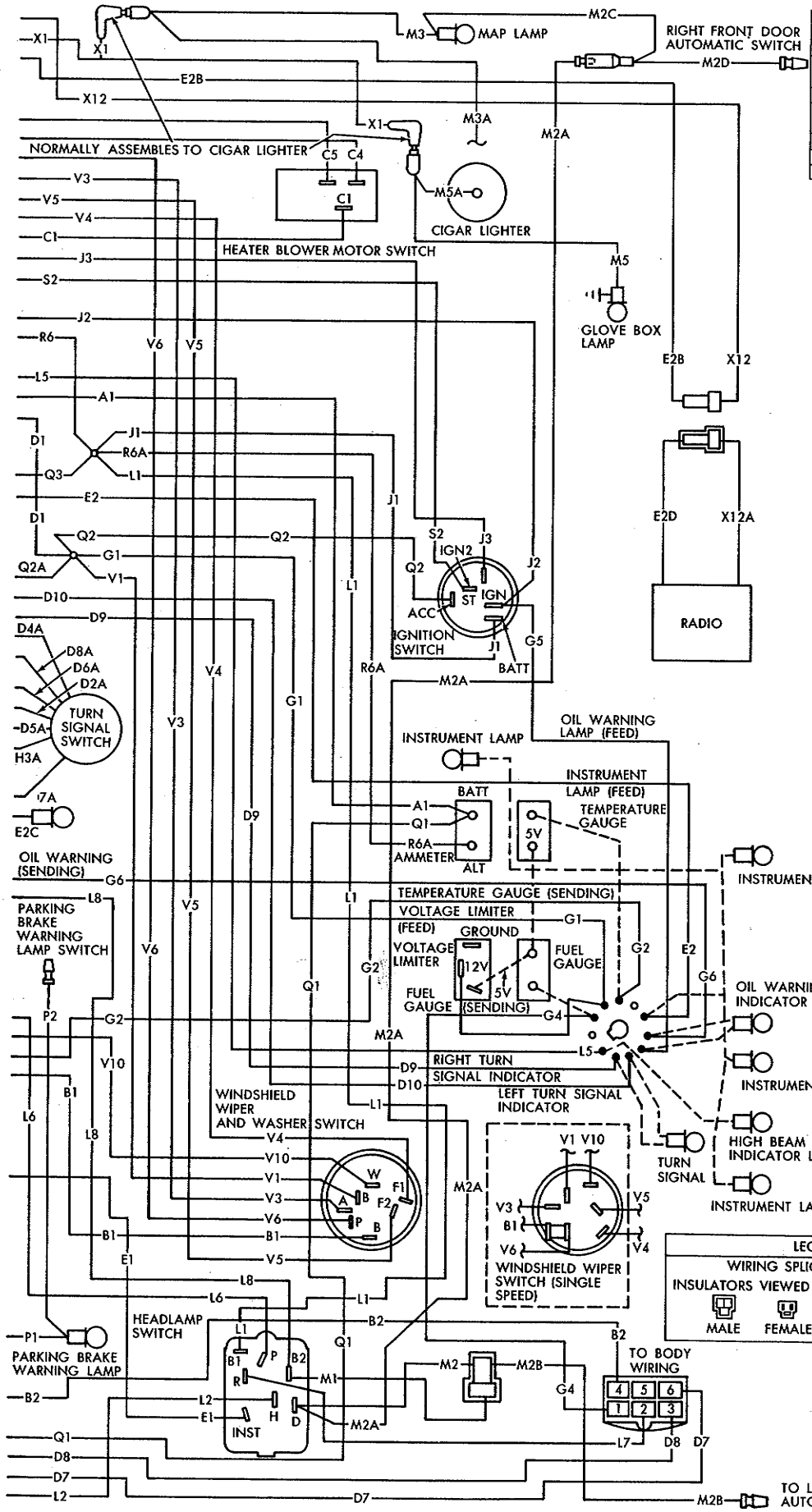


| CIRCUITS | | |
|---|---|---|
| CIR | GA | COLOR |
| A1 | 12 | RED |
| B1 | 18 | VIOLET WITH TRACER |
| B2 | 18 | VIOLET |
| C1 | 16 | BLACK WITH TRACER |
| C1A | 16 | LIGHT GREEN |
| C1B | 18 | BLACK |
| C2 | 18 | DARK BLUE |

| CIRCUITS | | |
|---|---|---|
| CIR | GA | COLOR |
| C2A | 18 | DARK BLUE |
| C4 | 16 | BROWN |
| C4A | 16 | BROWN |
| C5 | 16 | DARK GREEN |
| C5A | 16 | DARK GREEN |
| C5B | 16 | DARK GREEN |
| C6A | 16 | LIGHT GREEN |
| C7 | 16 | TAN |
| C8 | 16 | DARK GREEN |
| C9 | 16 | BROWN |
| D1 | 18 | BLACK |
| D2 | 18 | RED |
| D2A | 18 | RED |
| D3 | 18 | PINK |
| D4 | 18 | WHITE |
| D4A | 18 | WHITE |
| D5 | 18 | TAN |
| D5A | 18 | TAN |
| D6 | 18 | LIGHT GREEN |
| D6A | 18 | LIGHT GREEN |
| D7 | 18 | BROWN |
| D7A | 18 | BROWN |
| D8 | 18 | DARK GREEN |
| D8A | 18 | DARK GREEN |
| D9 | 18 | TAN |
| D10 | 18 | LIGHT GREEN |
| E1 | 18 | TAN |
| E2 | 18 | ORANGE |
| E2A | 18 | ORANGE |
| E2B | 18 | ORANGE |
| E2C | 18 | ORANGE |
| E2D | 18 | ORANGE |
| G1 | 18 | BLACK |
| G2 | 18 | VIOLET |
| G4 | 18 | DARK BLUE |
| G5 | 18 | DARK BLUE WITH TRACER |
| G6 | 18 | GRAY |
| H3 | 18 | BLACK WITH TRACER |
| H3A | 18 | BLACK |
| J1 | 12 | RED |
| J2 | 16 | DARK BLUE WITH TRACER |
| J3 | 14 | BROWN |
| L1 | 16 | BLACK WITH TRACER |
| L2 | 16 | LIGHT GREEN |
| L3 | 18 | RED |
| L4 | 18 | BLACK |
| L5 | 18 | RED |
| L6 | 18 | YELLOW WITH TRACER |
| L7 | 18 | BLACK |
| L8 | 18 | PINK |
| M1 | 18 | PINK |
| M2 | 18 | YELLOW |
| M2A | 18 | YELLOW |
| M2B | 18 | YELLOW |
| M2C | 18 | YELLOW |
| M2D | 18 | YELLOW |
| M3 | 18 | PINK |
| M3A | 18 | PINK |
| M5 | 18 | PINK |
| M5A | 18 | PINK |
| P1 | 18 | LIGHT BLUE |
| P2 | 18 | LIGHT BLUE |
| Q1 | 12 | RED |
| Q2 | 12 | BLACK |
| Q2A | 14 | BLACK |
| Q3 | 14 | RED WITH TRACER |
| Q4 | 14 | BLACK |
| R6 | 12 | BLACK |
| R6A | 12 | BLACK |
| S2 | 18 | YELLOW |
| T1 | 12 | RED |
| T2 | 12 | BROWN |
| T3 | 12 | YELLOW |
| V1 | 16 | PINK |
| V3 | 18 | BLACK WITH TRACER |
| V3A | 16 | BLACK |
| V4 | 18 | RED |
| V4A | 16 | RED |
| V5 | 18 | YELLOW |
| V5A | 16 | YELLOW |
| V6 | 18 | DARK BLUE |
| V6A | 16 | DARK BLUE |
| V10 | 18 | BROWN WITH TRACER |
| X1 | 16 | RED |
| X12 | 18 | RED |
| X12A | 18 | RED |

NN682

MyMopar.com

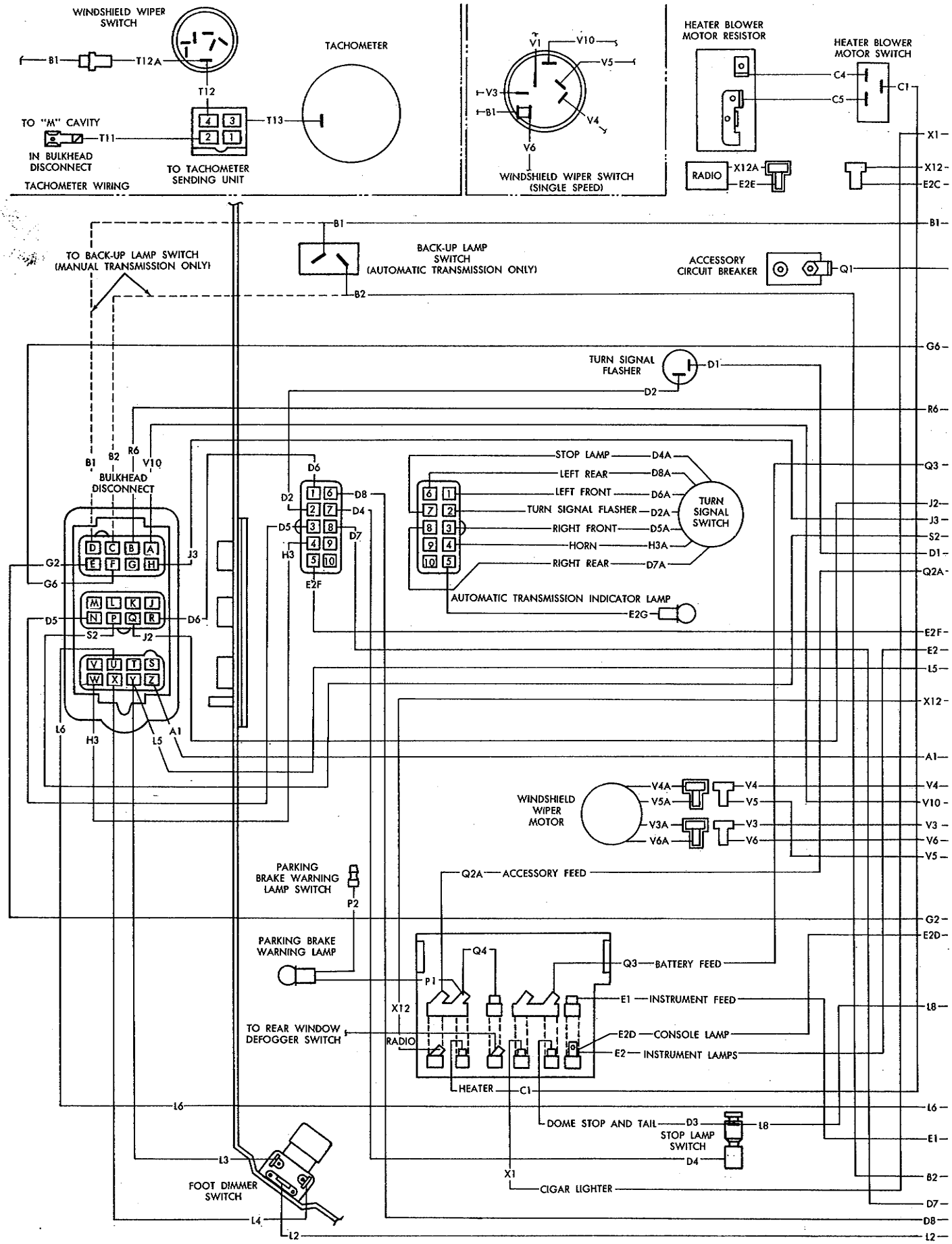


***Fig. 15—Instrument Panel Wiring—Barracuda Models***

MyMopar.com

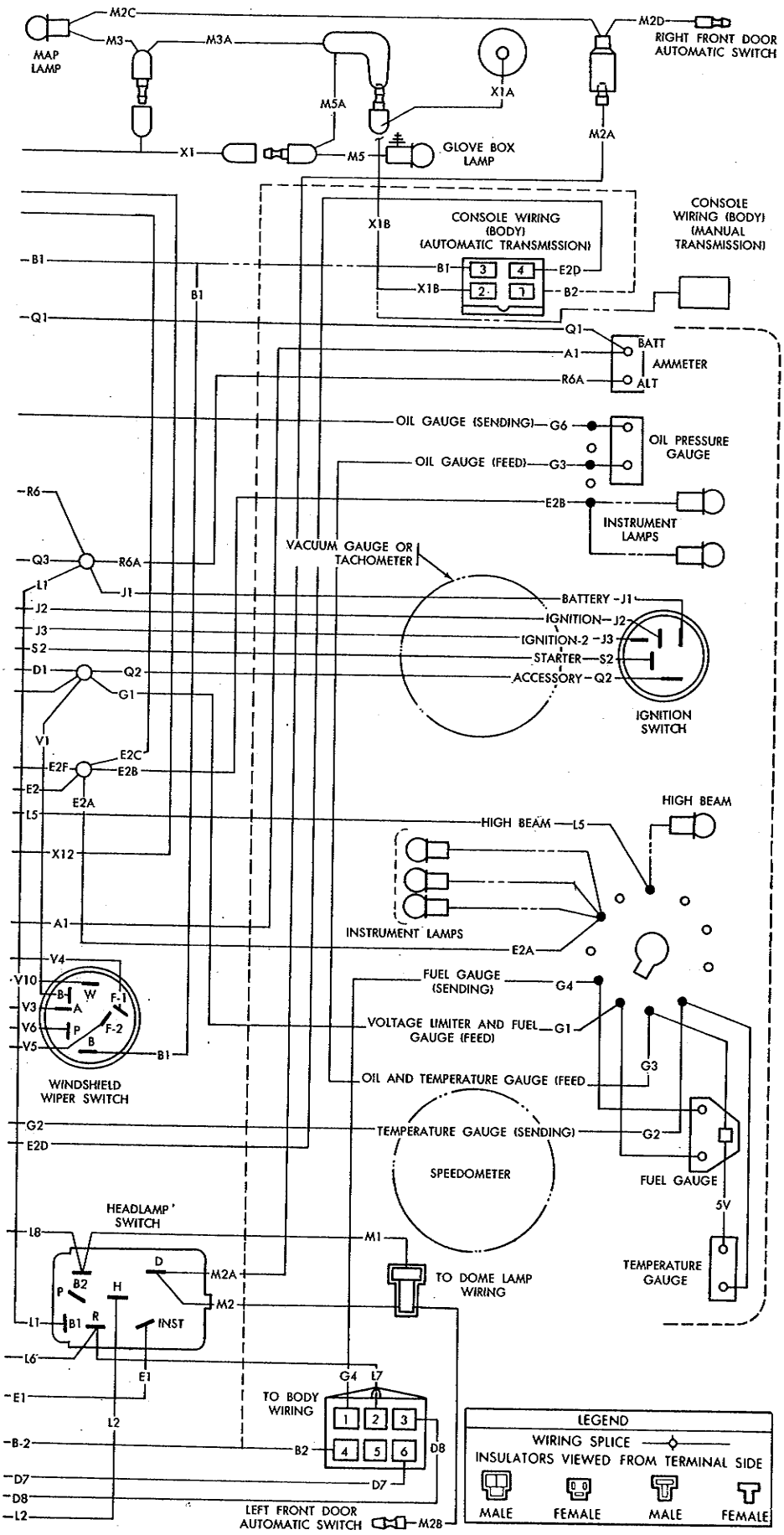


| CIRCUITS | | |
|---|---|---|
| CIR | GA | COLOR |
| A-1 | 12 | RED |
| B-1 | 18 | VIOLET WITH TRACER |
| B-2 | 18 | VIOLET |
| C-1 | 16 | BLACK WITH TRACER |
| C-1A | 18 | LIGHT GREEN |
| C-1B | 16 | BLACK |
| C-2 | 18 | DARK BLUE |
| C-2A | 18 | DARK BLUE |
| C-4 | 16 | BROWN |
| C-4A | 16 | BROWN |
| C-5 | 16 | DARK GREEN |
| C-5A | 16 | DARK GREEN |
| C-5B | 16 | DARK GREEN |
| C-6A | 16 | LIGHT GREEN |
| C-7 | 16 | TAN |
| C-8 | 16 | DARK GREEN |
| C-9 | 16 | BROWN |
| D-1 | 18 | BLACK |
| D-2 | 18 | RED |
| D-2A | 18 | RED |
| D-3 | 18 | PINK |
| D-4 | 18 | WHITE |
| D-4A | 18 | WHITE |
| D-5 | 18 | TAN |
| D-5A | 18 | TAN |
| D-6 | 18 | LIGHT GREEN |
| D-6A | 18 | LIGHT GREEN |
| D-7 | 18 | BROWN |
| D-7A | 18 | BROWN |
| D-8 | 18 | DARK GREEN |
| D-8A | 18 | DARK GREEN |
| E-1 | 18 | TAN |
| E-2 | 18 | ORANGE |
| E-2A | 18 | ORANGE |
| E-2B | 18 | ORANGE |
| E-2C | 18 | ORANGE |
| E-2D | 18 | ORANGE |
| E-2E | 18 | ORANGE |
| E-2F | 18 | ORANGE |
| E-2G | 18 | ORANGE |
| G-1 | 18 | BLACK |
| G-2 | 18 | VIOLET |
| G-3 | 18 | BROWN |
| G-4 | 18 | DARK BLUE |
| G-6 | 18 | GRAY |
| H-3 | 18 | BLACK WITH TRACER |
| H-3A | 18 | BLACK |
| J-1 | 12 | RED |
| J-2 | 16 | DARK BLUE WITH TRACER |
| J-3 | 14 | BROWN |

| CIRCUITS | | |
|---|---|---|
| CIR | GA | COLOR |
| L-1 | 16 | BLACK WITH TRACER |
| L-2 | 16 | LIGHT GREEN |
| L-3 | 18 | RED |
| L-4 | 18 | BLACK |
| L-5 | 18 | RED |
| L-6 | 18 | YELLOW WITH TRACER |
| L-7 | 18 | BLACK |
| L-8 | 18 | PINK |
| M-1 | 18 | PINK |
| M-2 | 18 | YELLOW |
| M-2A | 18 | YELLOW |
| M-2B | 18 | YELLOW |
| M-2C | 18 | YELLOW |
| M-2D | 18 | YELLOW |
| M-3 | 18 | PINK |
| M-3A | 16 | RED |
| M-5 | 18 | PINK |
| M-5A | 18 | PINK |
| P-1 | 18 | LIGHT BLUE |
| P-2 | 18 | LIGHT BLUE |
| Q-1 | 12 | RED WITH TRACER |
| Q-2 | 12 | BLACK |
| Q-2A | 14 | BLACK |
| Q-3 | 14 | RED WITH TRACER |
| Q-4 | 14 | BLACK |
| R-6 | 12 | BLACK |
| R-6A | 12 | BLACK |
| S-2 | 18 | YELLOW |
| T-11 | 18 | GRAY WITH TRACER |
| T-12 | 18 | VIOLET WITH TRACER |
| T-12A | 18 | VIOLET WITH TRACER |
| T-13 | 18 | YELLOW |
| V-1 | 16 | PINK |
| V-3 | 18 | BLACK WITH TRACER |
| V-3A | 16 | BLACK |
| V-4 | 18 | RED |
| V-4A | 16 | RED |
| V-5 | 18 | YELLOW |
| V-5A | 16 | YELLOW |
| V-6 | 18 | DARK BLUE |
| V-6A | 16 | DARK BLUE |
| V-10 | 18 | BROWN WITH TRACER |
| X-1 | 16 | RED |
| X-1A | 16 | RED |
| X-1B | 16 | RED |
| X-12 | 18 | RED |
| X-12A | 18 | RED |

NN735

MyMopar.com

| CIRCUITS | | |
|---|---|---|
| CIR. | GA. | COLOR |
| A1 | 6B | RED |
| A1A | 10 | BLACK |
| A1B | 16 | DARK BLUE WITH TRACER |
| B1 | 18 | VIOLET |
| B1A | 18 | VIOLET |
| B2 | 18 | VIOLET |
| B2A | 18 | VIOLET |
| C2 | 18 | DARK BLUE |
| C5 | 18 | DARK BLUE |
| D5 | 18 | TAN |
| D6 | 18 | LIGHT GREEN |
| G2 | 18 | VIOLET |
| G6 | 18 | GRAY |
| H1 | 16 | VIOLET |
| H2 | 16 | DARK GREEN |
| H2A | 16 | DARK GREEN |
| H3 | 18 | BLACK WITH TRACER |
| J2 | 16 | DARK BLUE WITH TRACER |
| J2A | 14 | DARK BLUE |
| J3 | 14 | BROWN |
| L3 | 18 | RED |
| L3A | 18 | RED |
| L4 | 18 | BLACK |
| L4A | 18 | BLACK |
| L6 | 18 | YELLOW WITH TRACER |
| L6A | 18 | YELLOW |
| L9 | 18 | WHITE |
| L9A | 18 | WHITE |
| R3 | 18 | DARK GREEN |
| R5 | 18 | DARK BLUE |
| R6 | 12 | BLACK |
| S2 | 18 | BLACK WITH YEL. TRACER |
| S4 | 16 | BLACK |
| S5 | 12 | BROWN |
| T11 | 18 | GRAY WITH TRACER |
| V10 | 18 | BROWN |

NN476

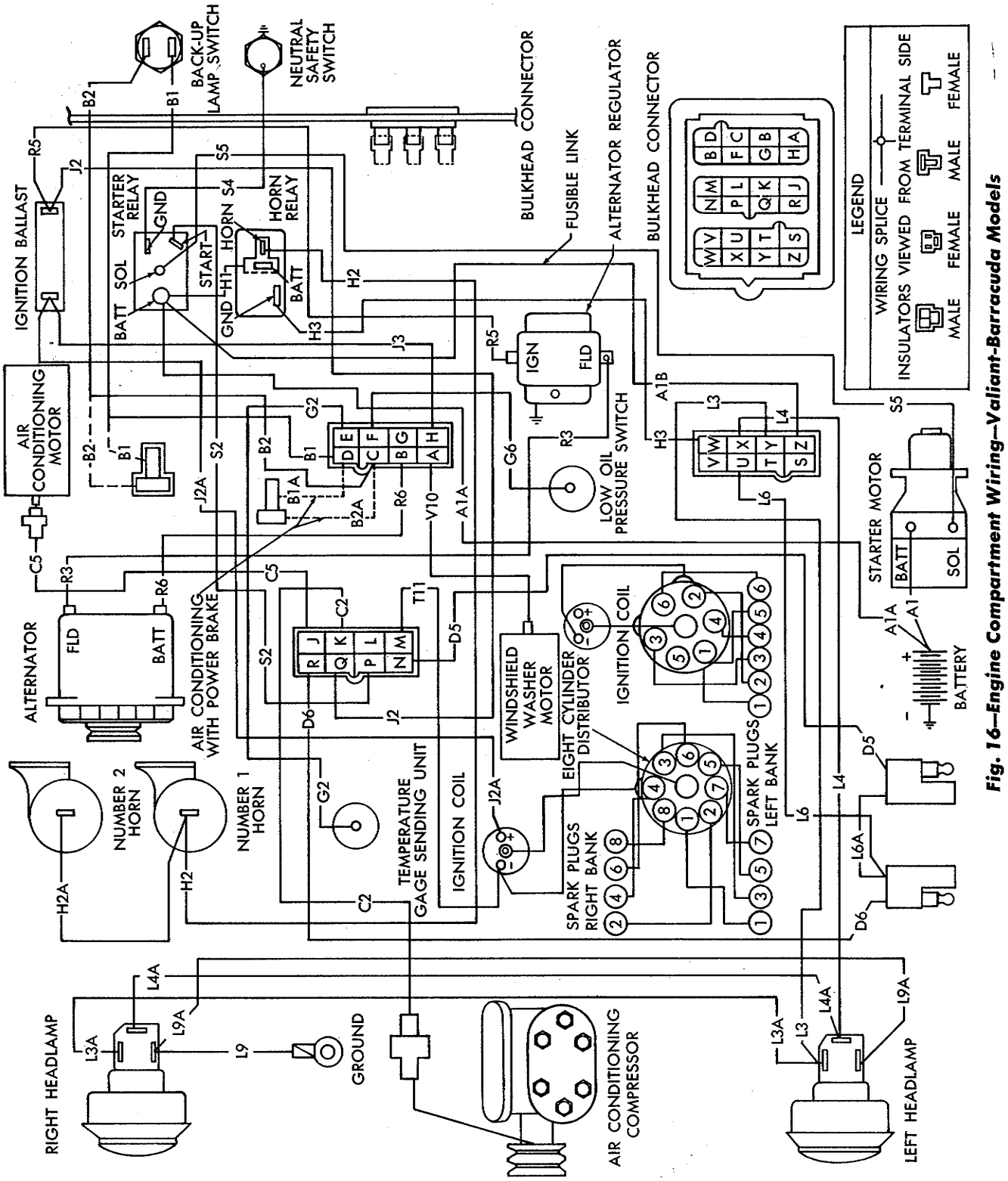


*Fig. 16—Engine Compartment Wiring—Valiant-Barracuda Models*

MyMopar.com

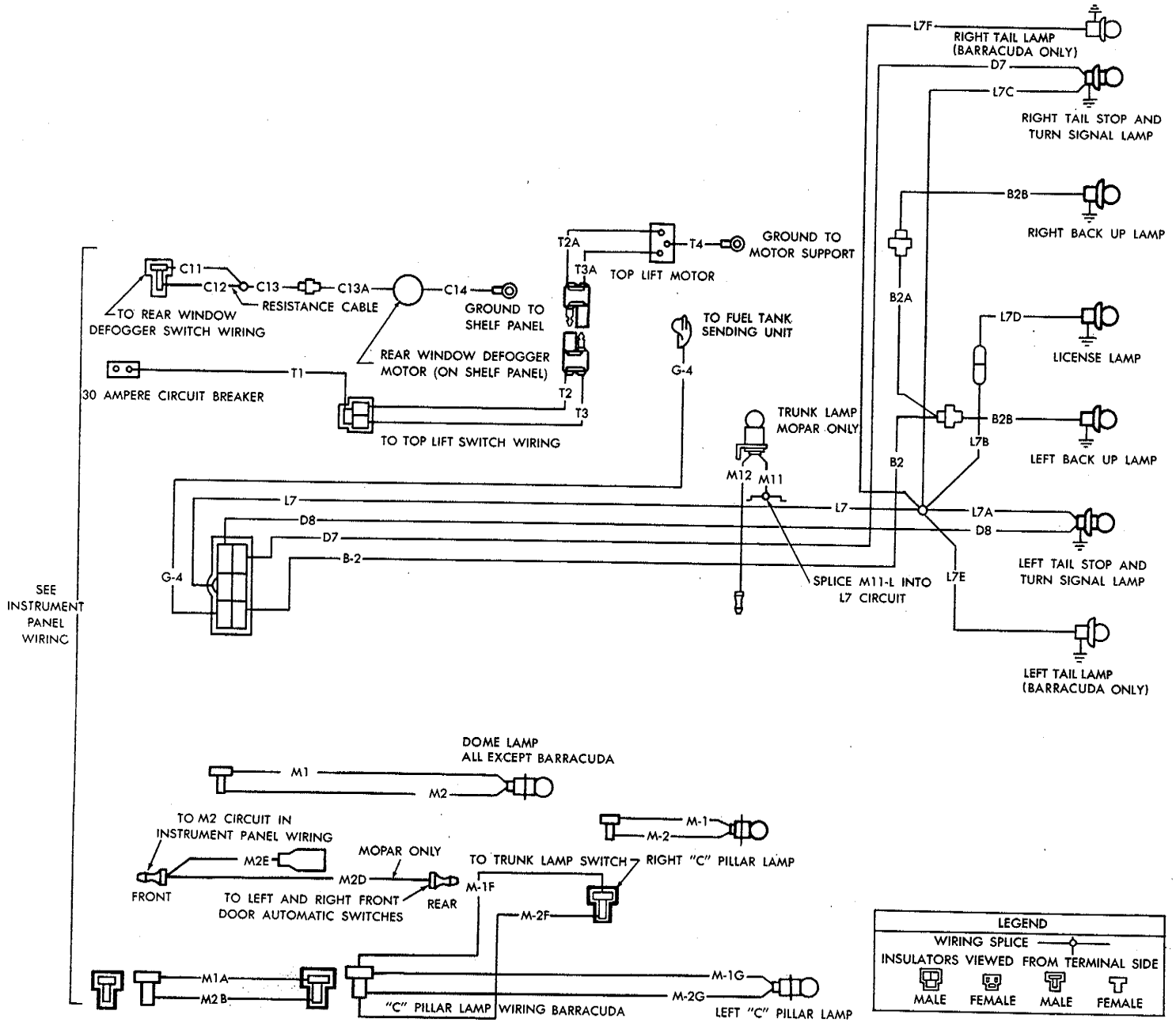


| CIRCUITS | | |
|---|---|---|
| CIR | GA | COLOR |
| B1 | 18 | VIOLET |
| B1A | 18 | VIOLET |
| B2 | 18 | VIOLET |
| B2A | 18 | VIOLET |
| B2B | 18 | VIOLET |
| B2C | 18 | VIOLET |
| B2D | 18 | VIOLET |
| C11 | 18 | BLACK |
| C12 | 20 | WHITE |
| C13 | 18 | BLACK |
| C13A | 14 | BLACK |
| C14 | 14 | BLACK |
| D7 | 18 | BROWN |
| D8 | 18 | DARK GREEN |
| E2 | 18 | ORANGE |
| G4 | 18 | DARK BLUE |
| L7 | 18 | BLACK |
| L7A | 18 | BLACK |
| L7B | 18 | BLACK |
| L7C | 18 | BLACK |
| L7D | 18 | BLACK |
| L7E | 18 | BLACK |
| L7F | 18 | BLACK |
| M1 | 18 | PINK |
| M1A | 18 | PINK |
| M1F | 18 | PINK |
| M1G | 18 | PINK |
| M2 | 18 | YELLOW |
| M2A | 18 | YELLOW |
| M2D | 18 | YELLOW |
| M2E | 18 | YELLOW |
| M2F | 18 | YELLOW |
| M2G | 18 | YELLOW |
| M11 | 18 | BLACK |
| M12 | 18 | BLACK |
| T1 | 12 | RED |
| T2 | 12 | BROWN |
| T2A | 12 | RED |
| T3 | 12 | YELLOW |
| T3A | 12 | YELLOW |
| T4 | 12 | BLACK |
| X2 | 18 | BLACK |




NK323A

***Fig. 17—Body Wiring—(Except Station Wagon)—Valiant and Barracuda Models***

MyMopar.com

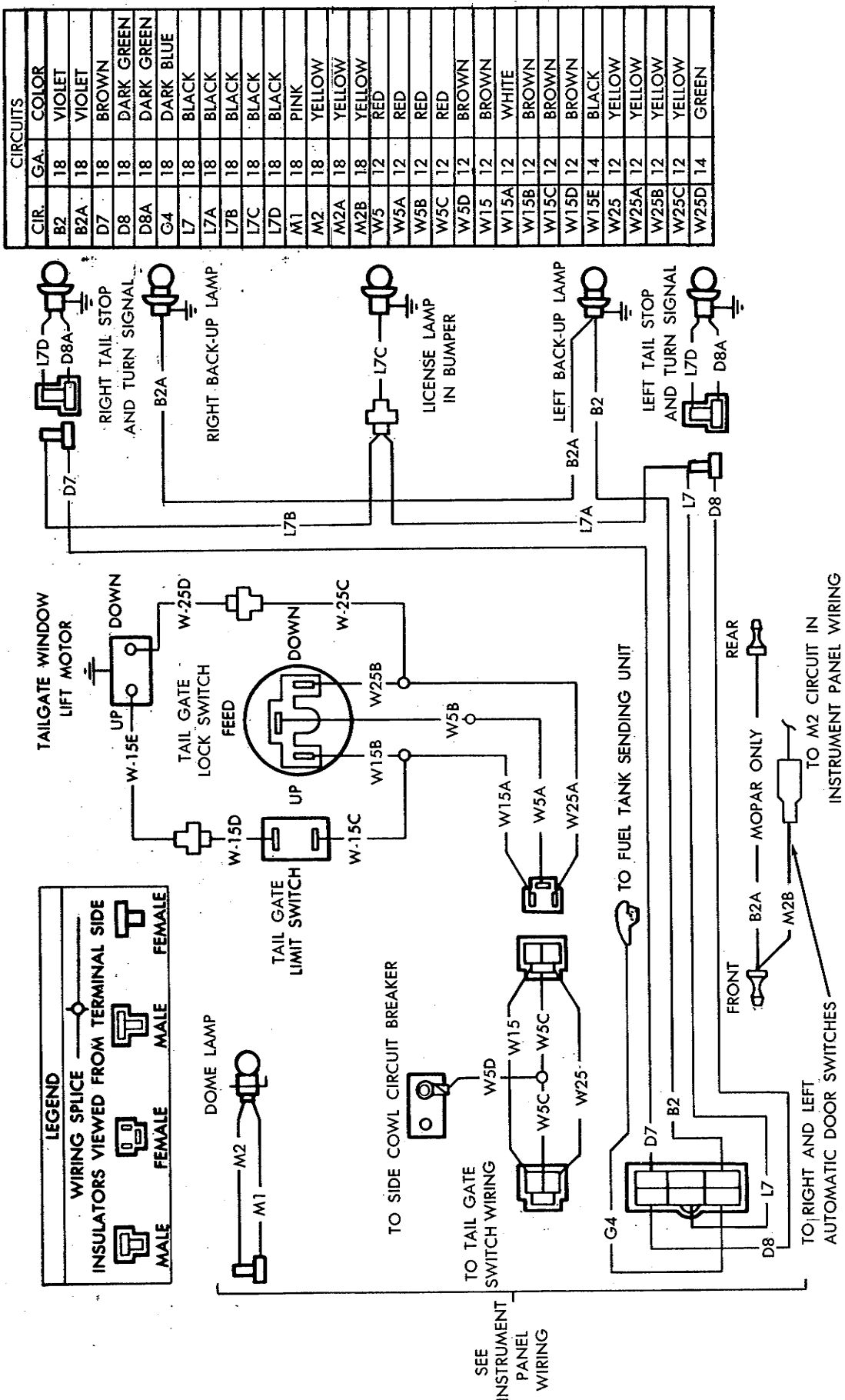


*Fig. 18—Body Wiring—(Station Wagon)—Valiant Models*

MyMopar.com

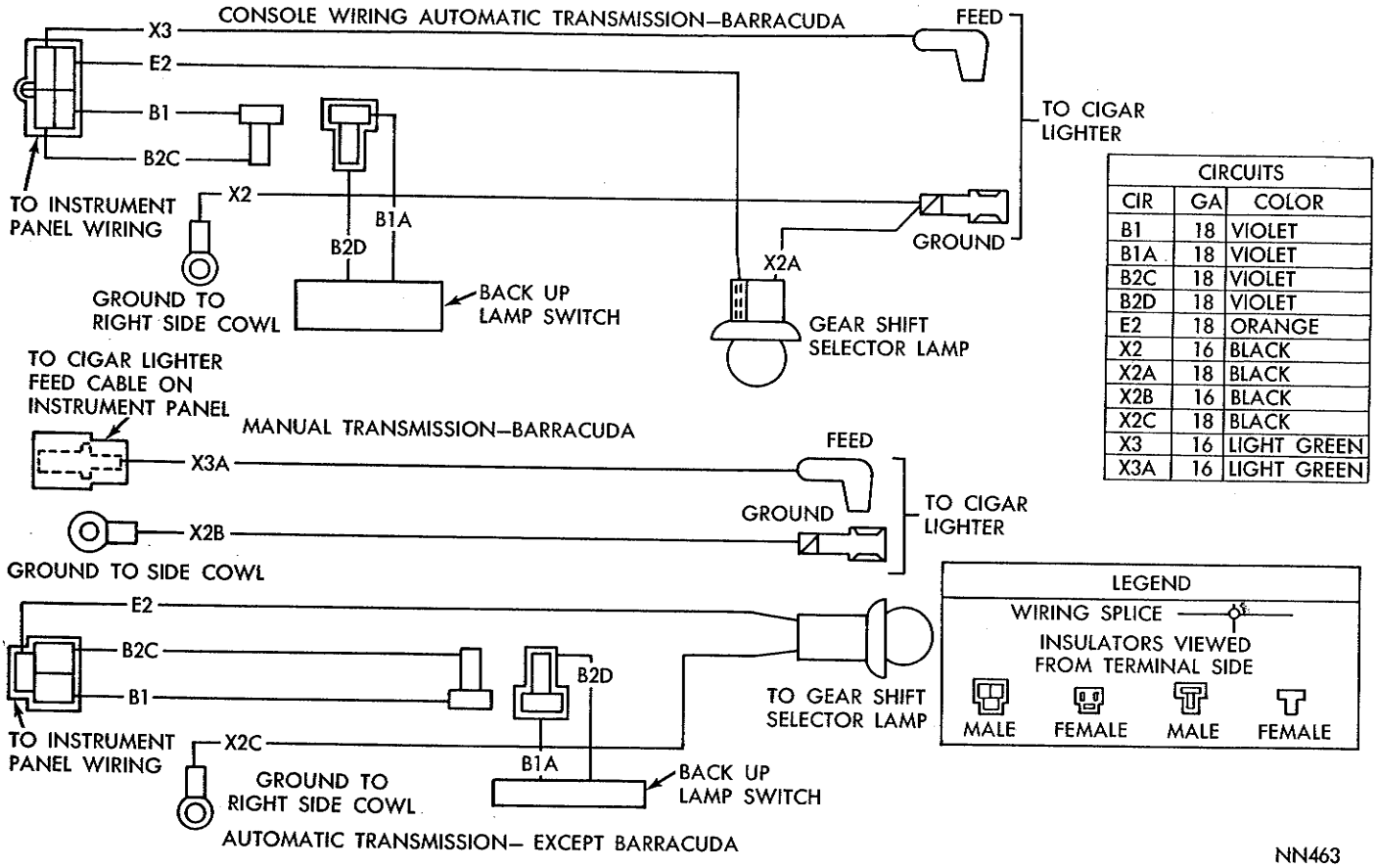


| CIRCUITS | | |
|---|---|---|
| CIR | GA | COLOR |
| B1 | 18 | VIOLET |
| B1A | 18 | VIOLET |
| B2C | 18 | VIOLET |
| B2D | 18 | VIOLET |
| E2 | 18 | ORANGE |
| X2 | 16 | BLACK |
| X2A | 18 | BLACK |
| X2B | 16 | BLACK |
| X2C | 18 | BLACK |
| X3 | 16 | LIGHT GREEN |
| X3A | 16 | LIGHT GREEN |

***Fig. 19—Console Wiring—Valiant-Barracuda Models***

MyMopar.com

MyMopar.com

# Plymouth

## SERVICE MANUAL 1966

### FOREWORD

This Plymouth Service Manual has been prepared with the latest service information available for use on 1966 models. Diagnosis, disassembly, repair, assembly and installation procedures coupled with complete specifications and tightening references can be found in each group. This publication is one of the most important "tools" available to the service technician. It will prove an invaluable aid in properly performing any phase of service necessary to maintain or restore the fine performance and reliability characteristics designed, engineered, and manufactured into these outstanding automobiles.

### PLYMOUTH MODELS

| | 1966 | |
|---|---|---|
| Valiant V-100, V-200, Signet and Barracuda | 6 Cyl. | BV-1 |
| Valiant V-100, V-200, Signet and Barracuda | 8 Cyl. | BV-2 |
| Belvedere I, II | 6 Cyl. | BR-1 |
| Belvedere I, II and Satellite | 8 Cyl. | BR-2 |
| Fury I, II, III | 6 Cyl. | BP-1 |
| Fury I, II, III and Sport Fury | 8 Cyl. | BP-2 |

| | 1965 | |
|---|---|---|
| Valiant V-100, V-200, Signet and Barracuda | 6 Cyl. | AV-1 |
| Valiant V-100, V-200, Signet and Barracuda | 8 Cyl. | AV-2 |
| Belvedere I, II | 6 Cyl. | AR-1 |
| Belvedere I, II and Satellite | 8 Cyl. | AR-2 |
| Fury I, II, III | 6 Cyl. | AP-1 |
| Fury I, II, III and Sport Fury | 8 Cyl. | AP-2 |

The service tools referred to in this Manual are available through Kelsey-Hayes Company, Miller Special Tools, 17640 Grand River, Detroit, Michigan 48227, U.S.A. unless otherwise specified.

Extra copies of this Manual are available at $5.00 each under Part Number 81-570-6450. Order from Chrysler-Plymouth Division, Service Department, P.O. Box 1658, Detroit, Michigan 48231.

CHRYSLER - PLYMOUTH DIVISION

CHRYSLER MOTORS CORPORATION

Chrysler Corporation reserves the right to make changes in design or to make additions to or improvements in its product without imposing any obligations upon itself to install them on its products previously manufactured.

Litho in U. S. A.

35M SD & T 8-65

81-570-6450

### GROUP INDEX


| | |
|---|---|
| | Introduction and General Specifications |
| 0 | Lubrication and Maintenance |
| 1 | Accessories—(Radios, Heaters, Mirrors) |
| 2 | Front Suspension |
| 3 | Rear Axle |
| 5 | Brakes—Service Parking |
| 6 | Clutch |
| 7 | Cooling System—Accessory Belt Drives |
| 8 | Electrical and Instruments |
| 9 | Engine—Engine Oiling |
| 11 | Exhaust System |
| 14 | Fuel System |
| 16 | Propeller Shaft and Universal Joints |
| 17 | Springs and Shock Absorbers |
| 19 | Steering Gear—Manual Power |
| 21 | Transmission—Standard Automatic |
| 22 | Wheels, Bearings and Tires |
| 23 | Body, Sheet Metal and Frame |
| 24 | Air-Conditioning |


MyMopar.com

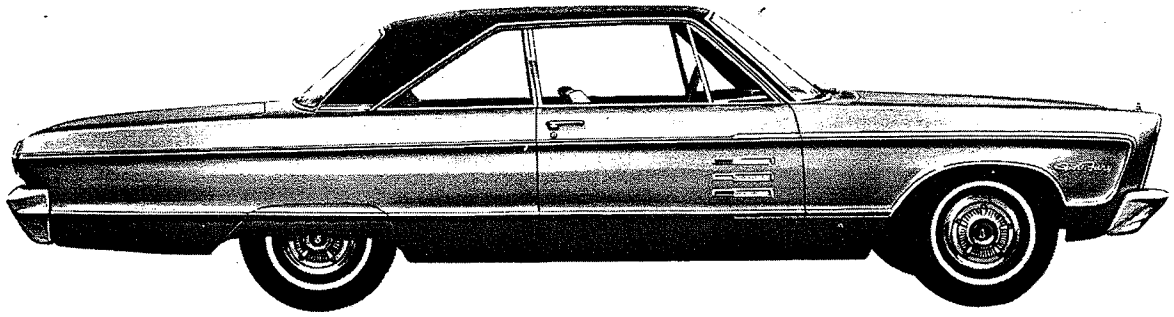

SPORT FURY 2-DOOR HARDTOP

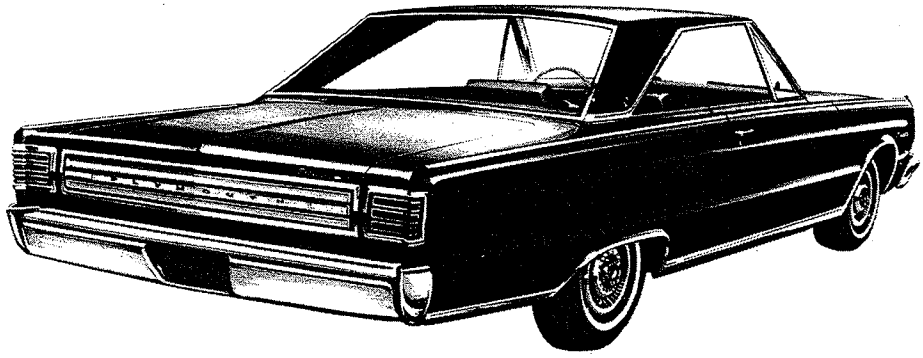

SATELLITE 2-DOOR HARDTOP

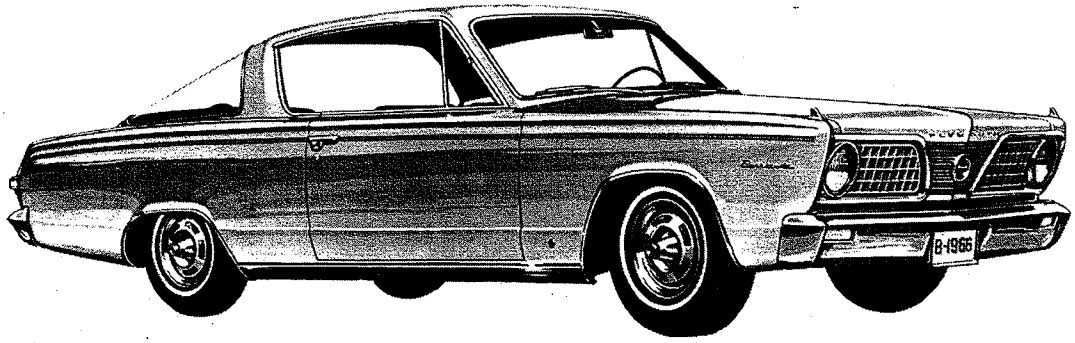

BARRACUDA

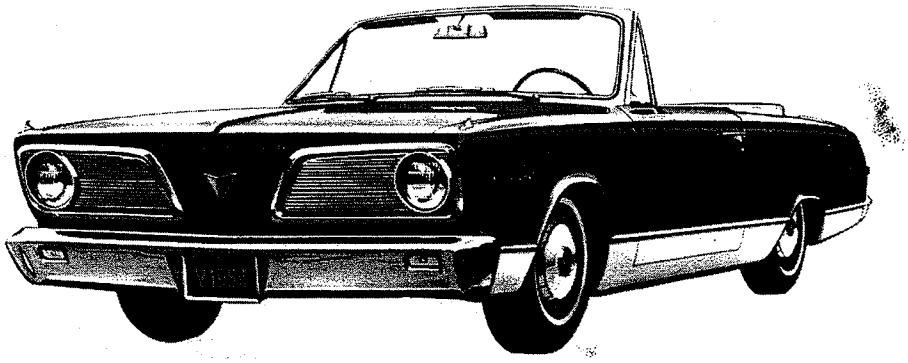

SIGNET CONVERTIBLE

NN807

***Fig. 1—1966 Plymouth Models***

MyMopar.com

# ENGINE

## CONTENTS


| | Page | | Page |
|---|---|---|---|
| GENERAL INFORMATION | 1 | 273-318 CUBIC INCH V8 ENGINES | 24 |
| SERVICE DIAGNOSIS | 2 | 361-383-426 CUBIC INCH ENGINES | 44 |
| 170-225 CUBIC INCH 6 CYLINDER ENGINES | 5 | SPECIFICATIONS AND TIGHTENING REFERENCE | 69 |


## PLYMOUTH ENGINE APPLICATION

| Model Application | No. Cyl. | Engine Type & Displacement | Compression Ratio | Remarks |
|---|---|---|---|---|
| Valiant 6 (Std) | 6 | "G" 170 Cubic Inch | 8.5 to 1 | 1 BBl. Carb. |
| Valiant 6 (Opt) Barracuda (Std) | 6 | "RG" 225 Cubic Inch | 8.4 to 1 | 1 BBl. Carb. |
| Valiant 8 Barracuda 8 (Std) | 8 | "LA" 273 Cubic Inch | 8.8 to 1 | 2 BBl. Carb., Std. Cam., Sil. Air Cleaner |
| (Opt) | 8 | "LA" 273 Cubic Inch | 10.5 to 1 | 4 BBl. Carb., Spec. Cam., Unsil. Air Cleaner |
| Belvedere 6 (Std) | 6 | "RG" 225 Cubic Inch | 8.4 to 1 | 1 BBl. Carb. |
| Belvedere 8 Satellite 8 (Std) | 8 | "LA" 273 Cubic Inch | 8.8 to 1 | 2 BBl. Carb., Std. Cam., Sil. Air Cleaner |
| (Opt) | 8 | "A" 318 Cubic Inch | 9.0 to 1 | 2 BBl Carb., Std. Cam., Sil. Air Cleaner |
| (Opt) | 8 | "LB" 361 Cubic Inch | 9.0 to 1 | 2 BBl. Carb., Std. Cam., Sil. Air Cleaner |
| (Opt) | 8 | "LB" 383 Cubic Inch | 10.0 to 1 | 4 BBl. Carb., Std. Cam., Unsil. Air Cleaner |
| Fury 6 (Std) | 6 | "RG" 225 Cubic Inch | 8.4 to 1 | 1 BBl. Carb. |
| Fury 8 (Std) | 8 | "A" 318 Cubic Inch | 9.0 to 1 | 2 BBl. Carb. |
| Fury 8 (Opt) Sport Fury 8 (Std) | 8 | "LB" 383 Cubic Inch | 9.2 to 1 | 2 BBl. Carb. Std. Cam. |
| Fury 8 Sport Fury 8 (Opt) | 8 | "LB" 383 Cubic Inch | 10.0 to 1 | 4 BBl. Carb., Std. Cam., Double Snorkle Air Cleaner |
| (Opt) | 8 | "RB" 426 Cubic Inch | 10.3 to 1 | 4 BBl. Carb., Std. Cam., Double Snorkle Air Cleaner, Dual Exhaust |

## GENERAL INFORMATION

### *Six Cylinder Engine*

The 6 cylinder engine, (Fig. 1) is inclined toward the right at an angle of 30 degrees from the vertical in the engine compartment. This design permits a lower hood line and allows space in the engine compartment for the long intake manifold branches. The engine has in-line overhead valves and wedge shaped combustion chambers and a nominal compression ratio of 8.5:1 for the 170 cu. in. engine and 8.4:1 for the 225 cu. in. engine.

The lubrication system consists of an externally mounted rotor type pump on the lower right side of the cylinder block. A full flow replaceable element type oil filter is mounted on the rear of the oil pump body. Oil is forced by the oil pump to a series of oil passages in the engine (Fig. 46).

The semi-series flow cooling system contains an aluminum water pump body with a pressed in ball bearing and seal assembly and plastic impeller. The water pump housing is integral with the cylinder block.

### *V8 Engines*

The V8 engines (Fig. 2) are all the valve-in-head type. Engines vary in compression ratio, piston displacement, camshaft, valve springs and power output.

The Fury 273 has mechanical tappets, 8.8 to 1 compression ratio, two bore carburetor; uses regular fuel.

The Fury 273H also has mechanical tappets with a high-performance camshaft and valve springs, 10.5 to 1 compression ratio, 4 bore carburetor; uses premium fuel.

The V8 318 cubic inch with a 9.0 to 1 compression ratio, mechanical tappets, two bore carburetor; uses regular fuel.

The Commando 361 has hydraulic tappets, two bore carburetor, 9.0 to 1 compression ratio; uses regular fuel.

The Commando 383 has hydraulic tappets, two bore carburetor, 9.2 to 1 compression ratio; uses regular fuel.

The Commando 383H has hydraulic tappets, 10.0 to 1 compression ratio, 4 bore carburetor; uses premium fuel.

MyMopar.com

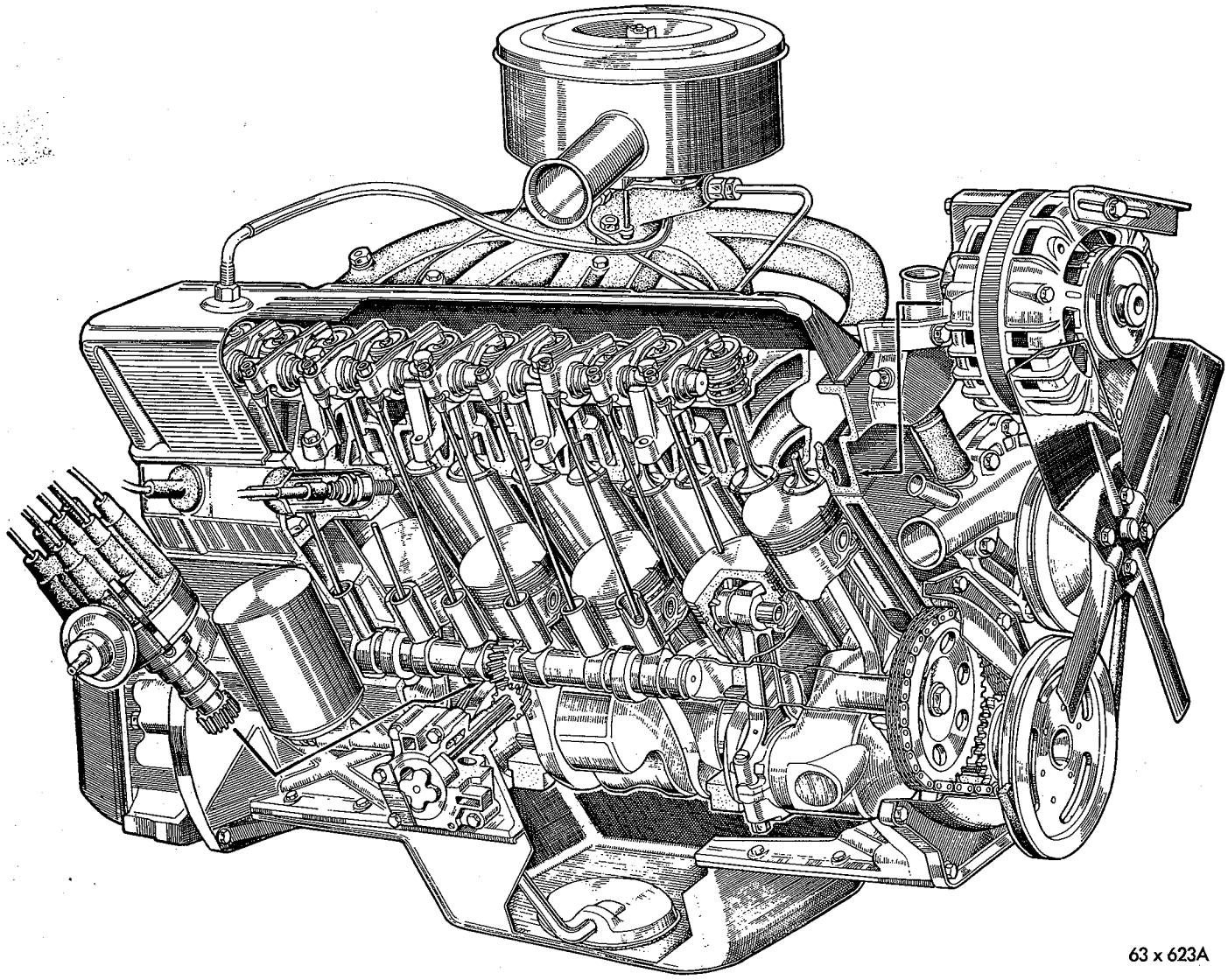


*Fig. 1—6 Cylinder Engine Cutaway View*

The Commando 426H has hydraulic tappets, 10.3 to 1 compression ratio, 4 bore carburetor; uses premium fuel.

Engine oiling system consists of a rotor type oil pump and a full flow oil filter. 318 cubic inch engine pump is mounted internally and 361, 383-426 cubic inch engines are mounted externally. Oil is forced by the oil pump to a series of oil passages in the engine.

## SERVICE DIAGNOSIS

| Condition | Possible Cause | Correction |
|---|---|---|
| **ENGINE WILL NOT START** | (a) Weak battery. | (a) Test battery specific gravity and recharge or replace as necessary. |
| | (b) Corroded or loose battery connections. | b) Clean and tighten battery connections. Apply a coat of petroleum to terminals. |
| | (c) Faulty starter. | (c) Refer to "Starter."* |
| | (d) Moisture on ignition wires and distributor cap. | (d) Wipe wires and cap clean and dry. |
| | (e) Faulty ignition cables. | (e) Replace any cracked or shorted cables. |
| | (f) Faulty coil or condenser. | (f) Test and replace if necessary.* |
| | (g) Dirty or corroded distributor contacts. | (g) Clean or replace as necessary. |
| | (h) Incorrect spark plug gap. | (h) Set gap at .035". |

MyMopar.com

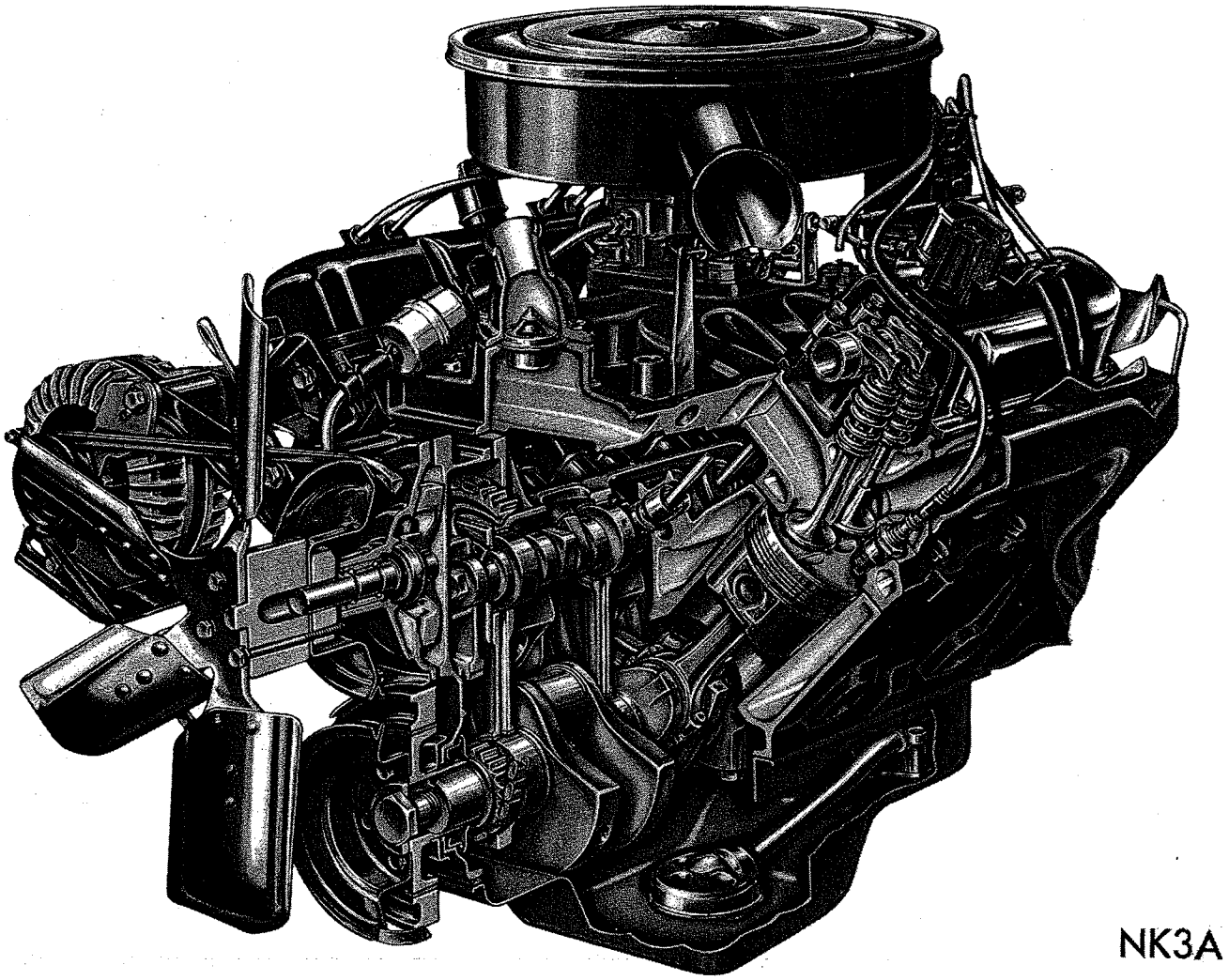


*Fig. 2—273 Cubic Inch Engine Cutaway View*

| Condition | Possible Cause | Correction |
|---|---|---|
| | (i) Incorrect ignition timing. | (i) Refer to "Ignition Timing."* |
| | (j) Dirt or water in fuel line or carburetor. | (j) Clean lines and carburetor.** |
| | (k) Carburetor flooded. | (k) Adjust float level—check seats.** |
| | (l) Incorrect carburetor float setting. | (l) Adjust float level—check seats.** |
| | (m) Faulty fuel pump. | (m) Install new fuel pump.** |
| | (n) Carburetor percolating. No fuel in the carburetor. | (n) Measure float level.** Adjust bowl vent. Inspect operation of manifold control valve. |
| **ENGINE STALLS** | (a) Idle speed set too low. | (a) Adjust carburetor.** |
| | (b) Incorrect choke adjustment. | (b) Adjust choke.** |
| | (c) Idle mixture too lean or too rich. | (c) Adjust carburetor.** |
| | (d) Incorrect carburetor float setting. | (d) Adjust float setting.** |
| | (e) Leak in intake manifold. | (e) Inspect intake manifold gasket and replace if necessary.*** |
| | (f) Dirty, burned or incorrectly gapped distributor contacts. | (f) Replace contacts and adjust.* |
| | (g) Worn or burned distributor rotor. | (g) Install new rotor. |
| | (h) Incorrect ignition wiring. | (h) Install correct wiring. |
| | (i) Faulty coil or condenser. | (i) Test and replace if necessary.* |

MyMopar.com

| Condition | Possible Cause | Correction |
|---|---|---|
| | (j) Incorrect tappet lash. | (j) Adjust to specifications. |
| **ENGINE LOSS OF POWER** | (a) Incorrect ignition timing. | (a) Refer to "Ignition Timing."* |
| | (b) Worn or burned distributor rotor. | (b) Install new rotor. |
| | (c) Wrong mechanical or vacuum advance (distributor). | (c) Install correct vacuum advance unit. Adjust mechanical advance. |
| | (d) Excessive play in distributor shaft. | (d) Remove and repair distributor.* |
| | (e) Worn distributor shaft cam. | (e) Remove and repair distributor.* |
| | (f) Dirty or incorrectorly gapped spark plugs. | (f) Clean plugs and set gap at .005". |
| | (g) Dirt or water in fuel line, carburetor or filter. | (g) Clean lines, carburetor and replace filter.** |
| | (h) Incorrect carburetor float setting. | (h) Adjust float level.** |
| | (i) Faulty fuel pump. | (i) Install new pump. |
| | (j) Incorrect valve timing. | (j) Refer to "Checking Valve Timing."*** |
| | (k) Blown cylinder head gasket. | (k) Install new head gasket.*** |
| | (l) Low compression. | (l) Test compression of each cylinder.*** |
| | (m) Burned, warped, or pitted valves. | (m) Install new valves.*** |
| | (n) Plugged or restricted exhaust system. | (n) Install new parts as necessary. |
| | (o) Faulty ignition cables. | (o) Replace any cracked or shorted cables. |
| | (p) Faulty coil or condenser. | (p) Test and replace as necessary.* |
| **ENGINE MISSES ON ACCELERATION** | (a) Dirty, burned, or incorrectly gapped distributor contacts. | (a) Replace contacts and adjust.* |
| | (b) Dirty, or gap too wide in spark plugs. | (b) Clean spark plugs and set gap at .035". |
| | (c) Incorrect ignition timing. | (c) Refer to "Ignition Timing."* |
| | (d) Dirt in carburetor | (d) Clean carburetor.** |
| | (e) Acceleration pump in carburetor. | (e) Install new pump.** |
| | (f) Burned, warped or pitted valves. | (f) Install new valves.*** |
| | (g) Faulty coil or condenser. | (g) Test and replace if necessary.* |
| **ENGINE MISSES AT HIGH SPEED** | (a) Dirty or incorrectly gapped distributor contacts. | (a) Clean or replace as necessary.* |
| | (b) Dirty or gap set too wide in spark plug. | (b) Clean spark plugs and set gap at .035". |
| | (c) Worn distributor shaft cam. | (c) Remove and repair distributor.* |
| | (d) Worn or burned distributor rotor. | (d) Install new rotor. |
| | (e) Excessive play in distributor shaft. | (e) Remove and repair distributor.* |
| | (f) Faulty coil or condenser. | (f) Test and replace if necessary.* |
| | (g) Incorrect ignition timing. | (g) Refer to "Ignition Timing."* |
| | (h) Dirty jets in carburetor. | (h) Clean jets.** |
| | (i) Dirt or water in fuel line, carburetor or filter. | (i) Clean lines, carburetor and replace filter.** |
| **NOISY VALVES** | (a) High or low oil level in crankcase. | (a) Check for correct oil level.*** |
| | (b) Thin or diluted oil. | (b) Change oil.*** |
| | (c) Low oil pressure. | (c) Check engine oil level.** |
| | (d) Dirt in tappets. | (d) Clean tappets.** |
| | (e) Bent push rods. | (e) Install new push rods.*** |
| | (f) Worn rocker arms. | (f) Inspect oil supply to rockers.*** |
| | (g) Worn tappets. | (g) Install new tappets.*** |
| | (h) Worn valve guides. | (h) Ream and install new valves with O/S stems.*** |
| | (i) Excessive run-out of valve seats or valve faces. | (i) Grind valve seats and valves.*** |
| | (j) Incorrect tappet lash. | (j) Adjust to specifications. |
| **CONNECTING ROD NOISE** | (a) Insufficient oil supply. | (a) Check engine oil level. Inspect oil pump relief valve, damper and spring.*** |
| | (b) Low oil pressure. | (b) Check engine oil level.*** |
| | (c) Thin or diluted oil. | (c) Change oil to correct viscosity. |
| | (d) Excessive bearing clearance. | (d) Measure bearings for correct clear- |

MyMopar.com

| Condition | Possible Cause | Correction |
|---|---|---|
| | (e) Connecting rod journals out-of-round. | (e) Remove crankshaft and regrind journals.*** |
| | (f) Misaligned connecting rods. | (f) Replace bent connecting rods.*** |
| MAIN BEARING NOISE | (a) Insufficient oil supply. | (a) Check engine oil level. Inspect oil pump relief valve, damper and spring.*** |
| | (b) Low oil pressure. | (b) Check engine oil level.*** |
| | (c) Thin or diluted oil. | (c) Change oil to correct viscosity. |
| | (d) Excessive bearing clearance. | (d) Measure bearings for correct clearances.*** |
| | (e) Excessive end play. | (e) Check No. 3 main bearing for wear on flanges.*** |
| | (f) Crankshaft journal out-of-round or worn. | (f) Remove crankshaft and regrind journals. |
| | (g) Loose flywheel or torque converter. | (g) Tighten to correct torque. |
| OIL PUMPING AT RINGS | (a) Worn, scuffed, or broken rings. | (a) Hone cylinder bores and install new rings.*** |
| | (b) Carbon in oil ring slots. | (b) Install new rings.*** |
| | (c) Rings fitted too tight in grooves. | (c) Remove the rings. Check grooves. If groove is not proper width, replace piston.*** |
| OIL PRESSURE DROP | (a) Low oil level. | (a) Check engine oil level. |
| | (b) Faulty oil pressure sending unit. | (b) Install new sending unit. |
| | (c) Clogged oil filter. | (c) Install new oil filter. |
| | (d) Worn parts in oil pump. | (d) Replace worn parts or pump. |
| | (e) Thin or diluted oil. | (e) Change oil to correct viscosity. |
| | (f) Excessive bearing clearance. | (f) Measure bearings for correct clearance.*** |
| | (g) Oil pump relief valve stuck. | (g) Remove valve and inspect, clean, and reinstall. |
| | (h) Oil pump suction tube loose, bent or cracked. | (h) Remove oil pan and install new tube if necessary. |

*Refer to the "Electrical and Instruments" Group 8 for service procedures.
**Refer to the "Fuel System" Group 14 for service procedures.
***Refer to the "Engine" Group 9 for service procedures.

# SIX CYLINDER ENGINES

## INDEX


| | Page | | Page |
|---|---|---|---|
| Camshaft | 14 | Oil Filter | 24 |
| Camshaft Bearings | 15 | Oil Pan | 20 |
| Closed Crankcase Ventilation System for State of California | 68 | Oil Pump | 21 |
| Connecting Rods | 18 | Pistons and Rings | 16 |
| Crankshaft Main Bearings | 19 | Piston Pin | 17 |
| Crankshaft Main Journals | 18 | Repair of Damaged or Worn Threads | 69 |
| Crankcase Ventilation System | 67 | Replacment of Rear Main Bearing Oil Seal | 20 |
| Cylinder Block | 15 | Rocker Arms and Shaft Assembly | 9 |
| Cylinder Head | 8 | Timing Chain Cover Oil Seal Replacement | 13 |
| Engine Oiling System | 20 | Timing Sprockets and Chain | 12 |
| Engine Replacement | 6 | Tune-Up | 5 |
| Measuring Connecting Rod Bearing Clearance | 18 | Valves and Valve Springs | 9 |
| Measuring Main Bearing Clearance | 19 | Valve Timing | 11 |


## SERVICE PROCEDURES

### TUNE-UP

(1) Test battery specific gravity, add water if necessary, clean and tighten battery connections.

MyMopar.com

(2) Test cranking voltage if below 9.6 volts and more than 130 amperes draw. See "Starting Motor Cranking Voltage" Electrical Group 8.

(3) Tighten intake manifold bolts to 15 foot-pounds.

(4) Perform cylinder compression test. Compression should not vary more than 20 pounds.

(5) Clean or replace spark plugs as necessary and adjust gap to .035 inch. Tighten to 30 foot-pounds.

(6) Test resistance of spark plug cables. Refer to "Ignition System Secondary Circuit Inspection" Electrical Section.

(7) Inspect the breaker plate contacts, primary wire and vacuum advance operation. Replace parts as necessary. Refer to Ignition System and make necessary adjustment. Test coil output voltage, primary and secondary resistance. Test Condenser.

(8) Install distributor, distributor cap, and spark plug cables. Reset ignition timing with vacuum advance line disconnected. Ignition timing should be set to compensate for altitudes and/or gasoline grades.

(9) Set carburetor idle mixture adjustment. Adjust throttle stop screw to specifications. Perform a combustion analysis.

(10) Test fuel pump for pressure and vacuum. Refer to "Fuel System" Group 14, Specifications.

(11) Inspect manifold heat control valve in exhaust manifold for proper operation and apply Manifold Heat Control Valve Solvent Part Number 1879318 or equivalent to bushing and shaft.

(12) Every 6 months remove filter element and blow out dirt gently with an air hose. Direct air from inside out, and keep nozzle 2 inches away from element to avoid damaging. Clean metal housing and install element. Every two years, install a new factory recommended MoPar filter element. Service unit more frequently when driving under severe conditions, such as in dusty areas (Fig. 3).

(13) Inspect crankcase ventilation system as outlined on page 67.

(14) Inspect and adjust accessory belt drives referring to Cooling System, Group 7 for proper adjustments.

(15) Road test vehicle as a final test.

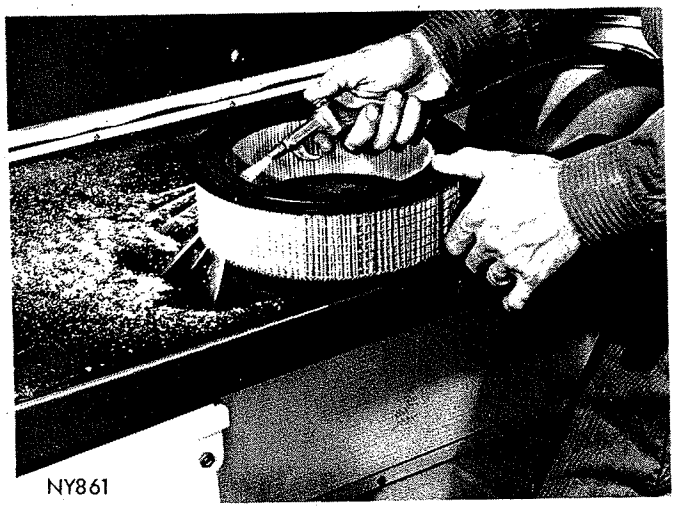


*Fig. 3—Cleaning Filter Element*

## ENGINE REPLACEMENT

### *Removal*

(1) Scribe hood hinge outlines on hood and remove hood.

(2) Drain cooling system and remove battery and carburetor air cleaner.

(3) Remove radiator and heater hoses and remove radiator.

(4) Remove closed vent system from cylinder head cover.

(5) Disconnect fuel lines, carburetor linkage and wiring to engine.

(6) Disconnect exhaust pipe at manifold.

(7) Raise vehicle on a hoist.

(8) Drain converter housing and transmission. Remove oil cooler lines, filler tube and shift cable.

(9) Remove clutch torque shaft, brake cables and rods.

(10) Remove speedometer cable and gear shift rods.

(11) Disconnect propeller shaft and tie-up out of way.

(12) Install engine support fixture Tool C-3806 to support rear of engine.

(13) Remove engine rear support crossmember (Figs. 4, 5 and 6).

(14) Remove transmission bolts from clutch housing.

(15) Remove transmission.

(16) Lower vehicle.

(17) Install engine lifting fixture Tool C-3804 to cyl-

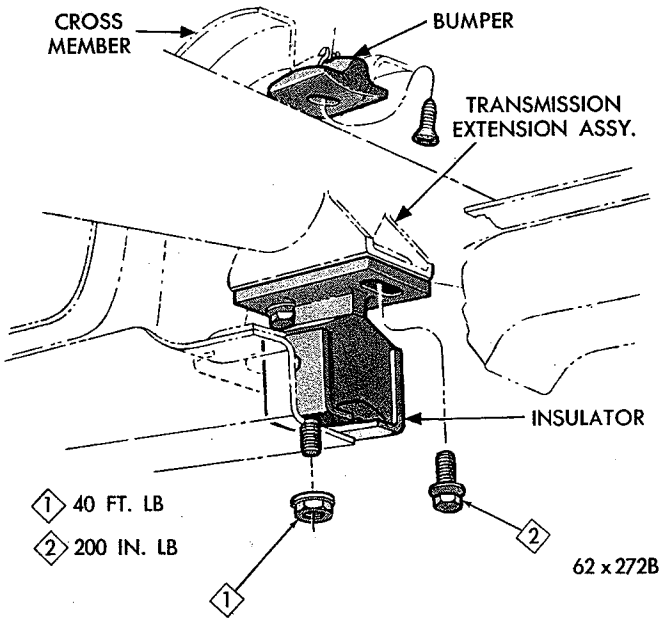


*Fig. 4—Engine Rear Support (106" Wheelbase)*

MyMopar.com

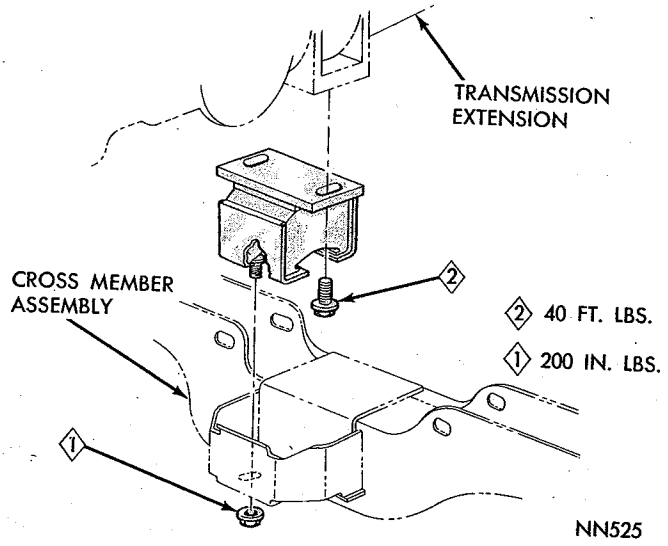


***Fig. 5—Engine Rear Support Except 4-Speed Manual Transmission (116" and 117" Wheelbase)***

inder head and attach a chain hoist to fixture eyebolt.

(18) Remove engine support fixture.

(19) Remove front engine mount bolts (Figs. 7 and 8).

(20) Lift engine from engine compartment and install in engine repair stand.

## Installation

(1) Install engine lifting fixture Tool C-3804 and attach a chain hoist to fixture eyebolt.

(2) Lower engine into engine compartment until front of engine is positioned on front engine mounts.

(3) Install front engine mount bolts. **Do not tighten.**

(4) Install engine support fixture Tool C-3806.

(5) Remove chain hoist and engine lifting fixture.

(6) Raise vehicle on a hoist.

(7) Position rear of engine and install transmission.

(8) Install engine rear support crossmember.

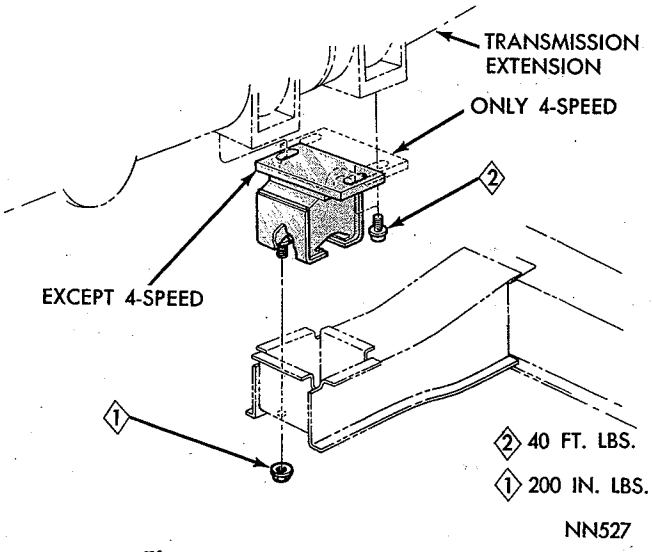


***Fig. 6—Engine Rear Support (119" and 121" Wheelbase)***

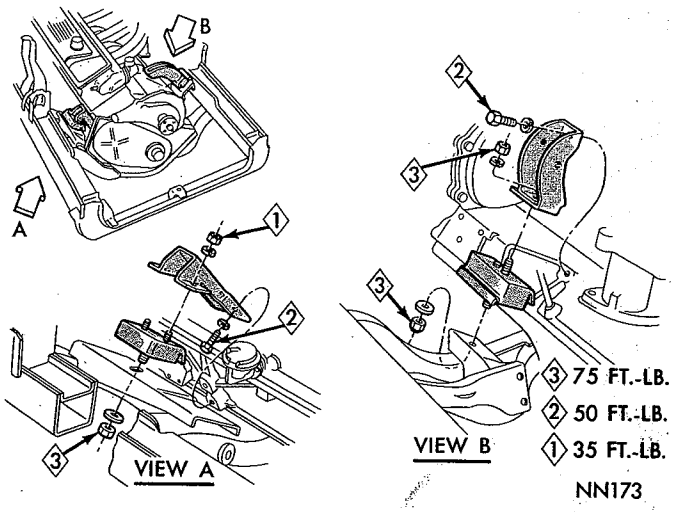


***Fig. 7—Front Engine Mounts (106" Wheelbase)***

(9) Connect propeller shaft at transmission.

(10) Install speedometer cable and gear shift rods.

(11) Install clutch torque shaft, brake cables and rods.

(12) Install cooler lines, and transmission filler tube.

(13) Lower vehicle.

(14) Tighten front engine mount bolts to specified torque.

(15) Connect exhaust pipe at the manifold using a new gasket.

(16) Connect fuel lines, carburetor linkage and wiring to engine.

(17) Install closed vent system on the cylinder head cover.

(18) Install radiator hoses, battery and carburetor air cleaner.

(19) Fill cooling system and transmission.

(20) Install hood. Refer to scribe lines made at removal.

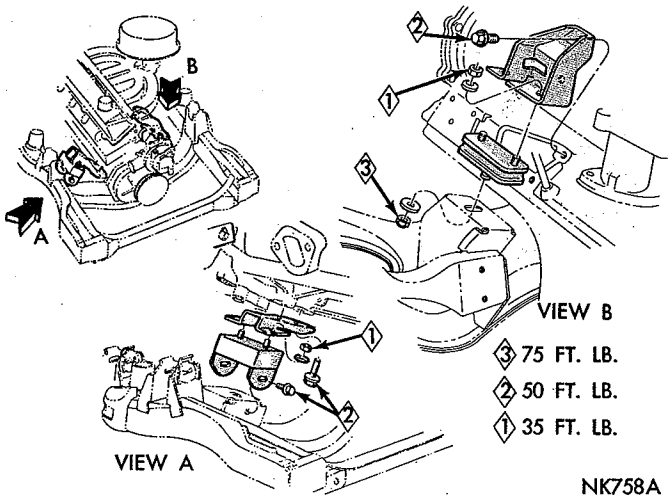


***Fig. 8—Front Engine Mounts (116", 117", 119" and 121" Wheelbase)***

MyMopar.com

## CYLINDER HEAD

The chrome alloy cast iron cylinder head (Fig. 9) is held in place by 14 bolts. Spark plugs are located at the wide edge of the combustion chambers and aluminum spark plug tubes serve as spark plug gaskets.

### *Removal*

(1) Drain cooling system.
(2) Remove carburetor air cleaner and fuel line.
(3) Disconnect accelerator linkage.
(4) Remove vacuum control tube at carburetor and distributor.
(5) Disconnect spark plug wires by pulling straight out in line with the plug.
(6) Disconnect heater hose and clamp holding by-pass hose.
(7) Disconnect heat indicator sending unit wire.
(8) Disconnect exhaust pipe at exhaust manifold flange.
(9) Remove intake and exhaust manifold and carburetor as an assembly.
(10) Remove closed vent system and cylinder head cover.
(11) Remove rocker arms and shaft assembly.
(12) Remove push rods and place them in their respective slots in holder, Tool C-3068.
(13) Remove 14 head bolts and remove cylinder head.
(14) Place cylinder head in holding fixture Tool C-3626 and remove spark plugs and tubes.

### *Installation*

(1) Clean all gasket surfaces of cylinder block and cylinder head and install spark plugs.
(2) Inspect all surfaces with a straight edge if there is any reason to suspect leakage.
(3) Coat new gasket with MoPar Sealer, Part Number 1057794 or equivalent. Install gasket and cylinder head.
(4) Install cylinder head bolts. Starting at top center, tighten all cylinder head bolts to 65 foot-pounds in sequence (Fig. 10). Repeat the procedure, retightening all cylinder head bolts to 65 foot-pounds.
(5) Install rocker arms and shaft assembly with "FLAT" on end of rocker shaft "ON TOP" and pointing toward front of engine, as shown in Figure 11 to provide proper lubrication to rocker assemblies. **Install rocker shaft retainers between rocker arms so they seat on rocker shaft and not on extended bushing of rocker arm.** Be sure to install long retainer in center position only. Install rocker shaft bolts (long bolt at rear of engine) and tighten to 25 foot-pounds.
(6) Loosen the 3 bolts holding intake manifold to exhaust manifold. This is required to maintain proper alignment.
(7) Install intake and exhaust manifold and carburetor assembly to the cylinder head with cup side of the conical washers against manifolds. Tighten nuts to 10 foot-pounds.
(8) Tighten 3 bolts holding intake manifold to exhaust manifold to 15 foot-pounds.

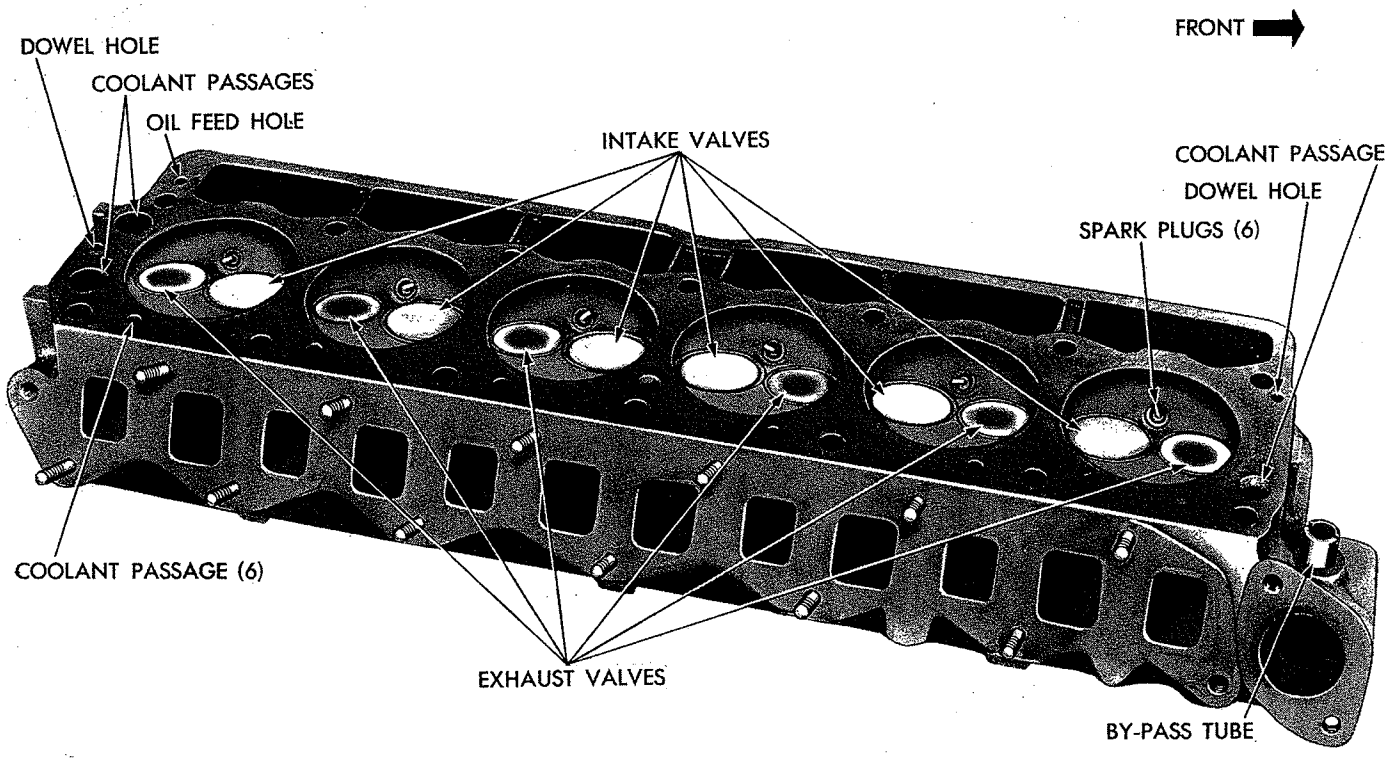


*Fig. 9—Cylinder Head*

MyMopar.com

**Sequence: Tighten inner bolt first, then the outer two bolts.**

(9) Connect heater hose and by-pass hose clamp.

(10) Connect heat indicator sending unit wire, accelerator linkage and spark plug cables.

(11) Install vacuum control tube at carburetor and distributor.

(12) Connect exhaust pipe to exhaust manifold flange.

(13) Install fuel line and carburetor air cleaner.

(14) Fill cooling system.

(15) Operate engine until normal operating temperature is reached (approximately 180° F. water temperature).

(16) Allow engine to idle at 550 rpm at this 180° F. temperature for five minutes.

(17) Adjust tappets, **Hot;** intake .010 inch, exhaust .020 inch.

(18) Place new cylinder head cover gasket in position and install the cylinder head cover. Tighten nuts to 40 inch-pounds.

(19) Install closed vent system.

## ROCKER ARMS AND SHAFT ASSEMBLY

Stamped steel rocker arms are arranged on a single rocker arm shaft. Hardened steel spacers are used between the pairs of rocker arms. The rocker shaft is held in place by bolts and stamped steel retainers attached to the seven brackets on the cylinder head.

### *Removal*

(1) Remove closed vent system.

(2) Remove cylinder head cover and gasket.

(3) Remove rocker shaft bolts and retainers.

(4) Remove rocker arms and shaft assembly.

### *Installation*

(1) Rocker arms and shaft assembly must be installed, as shown in Figure 11. The flat on the end of rocker shaft must be on top and point toward front of engine. This is necessary to provide proper lubrication to rocker assemblies.

(2) Install rocker shaft retainers between rocker arms so they seat on rocker shaft and not on the extended bushing of rocker arm.

Be sure to install long retainer in center position only.

(3) Install rocker shaft bolts. Install long bolt at the rear of the engine. Tighten to 25 foot-pounds.

(4) Adjust tappets. **Hot;** intake .010 inch, exhaust .020 inch.

## VALVES AND SPRINGS

Valves are arranged in line in the cylinder head and operate in guides that are integral with the cylinder heads.

### *Removal*

(1) With cylinder head removed, compress valve springs, using Tool C-3422A (Fig. 12).

(2) Remove valve retaining locks, valve spring retainers, valve stem cup seals and valve springs.

**Remove any burrs from valve stem lock grooves to prevent damage to the valve guide when valves are removed.**

### *Valve Inspection*

(1) Clean valves thoroughly and discard burned, warped and cracked valves.

(2) Measure valve stems for wear. The intake valve stem diameter (new valve) should measure .372 to .373 inch and exhaust valve stem diameter (new valve) should measure .371 to .372 inch. If wear exceeds .002 inch, replace the valve.

(3) Remove carbon and varnish deposits from inside of valve guides, with Tool C-756.

(4) Measure valve stem guide clearance as follows:

(a). Install sleeve Tool C-3973 over valve stem and install valve (Fig. 13). The special sleeve places the valve at the correct height for measuring with a

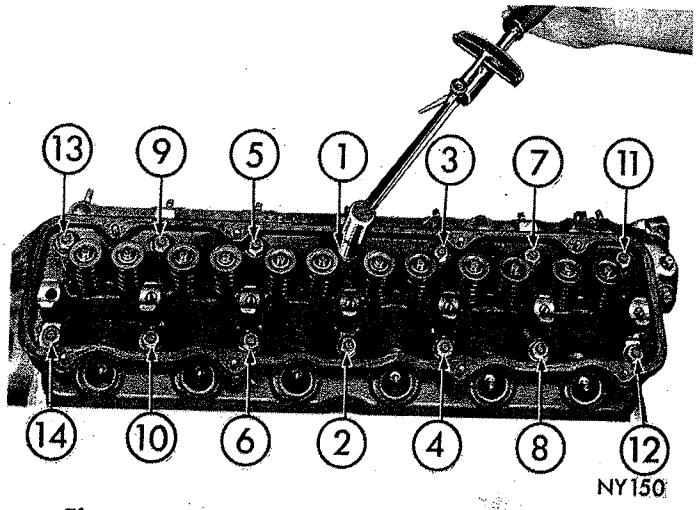


*Fig. 10—Cylinder Head Tightening Sequence*

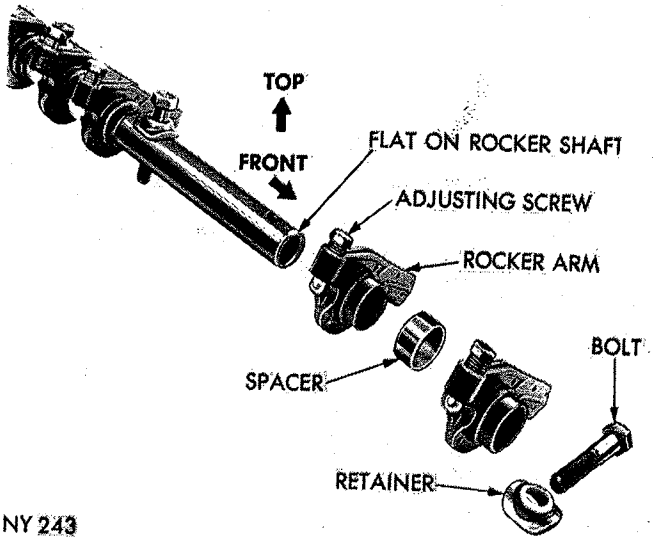


*Fig. 11—Rocker Shaft Assembly*

MyMopar.com

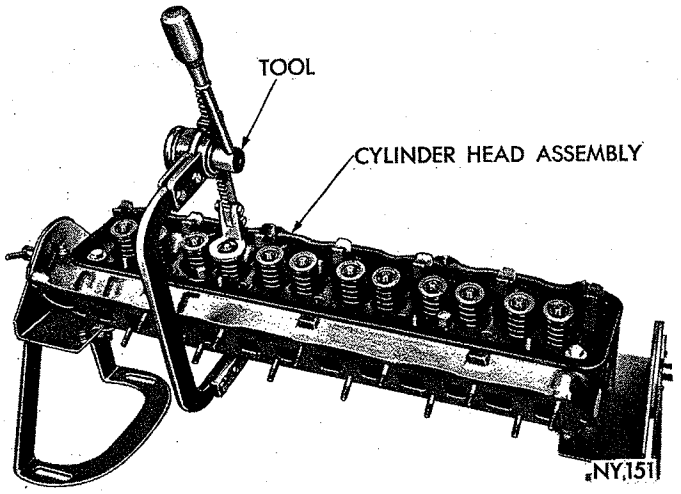


*Fig. 12—Compressing Valve Spring (Tool C-3422A)*

dial indicator.

(b). Attach dial indicator Tool C-3339 to cylinder head and set it at right angle to the valve stem being measured (Fig. 14).

(c). Move valve to and from the indicator. The total dial indicator reading should not exceed .017 inch. Ream guides for valves with oversize stems if dial indicator reading is excessive or if stems are scuffed or scored.

Service valves are available in standard, .005, .015 and .030 inch oversizes. Reamer to accommodate the oversize valve stem are as follows: Reamer Tool C-3433 (.005″ O.S.), Reamer Tool C-3430 (.015″ O.S.), Reamer Tool C-3427 (.030″ O.S.).

(d). Slowly turn reamer by hand and clean guide thoroughly before installing a new valve. **Do not attempt to ream valve guides from standard directly to .030 inch. Use step procedure of .005, .015 and .030 inch so valve guides may be reamed true in relation to the valve seat.**

### *Refacing Valves and Valve Seats*

(1) The intake and exhaust valve seats and the intake valve face have a 45 degree angle. The exhaust valve face has a 43 degree angle. The valve face and valve seat angles, are shown in Figure 15.

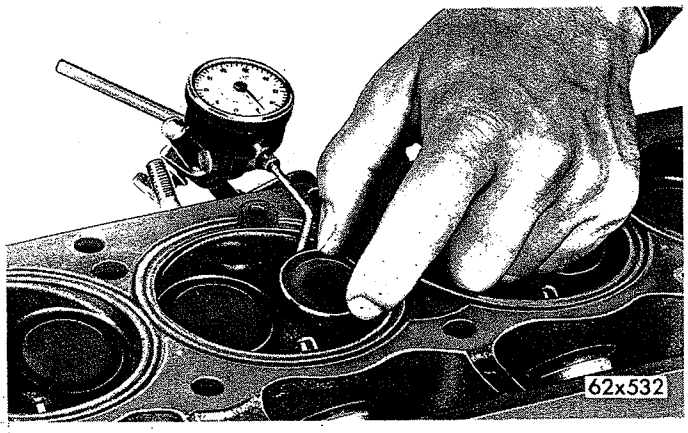


*Fig. 14—Measuring Valve Guide Wear Using Tool C-3339*

(2) Inspect the remaining margin after the valves are refaced (Fig. 16). Valves with less than 3/64 inch margin should be replaced.

(3) When refacing valve seats, it is important that the correct size valve guide pilot be used for reseating stones. A true and complete surface must be obtained.

(4) Measure the concentricity of the valve seat using dial indicator No. 13725. Total runout should not exceed .002 inch (total indicator reading).

(5) Inspect valve seat with Prussian blue to determine where valve contacts the seat. To do this, coat valve seat **lightly** with Prussian Blue then set the valve in place. Rotate the valve with light pressure. If the blue is transferred to the center of the valve face, contact is satisfactory. If the blue is transferred to the top edge of valve face, lower the valve seat with a 30° stone. If the blue is transferred to the bottom edge of valve face raise the valve seat with a 60° stone.

(6) When the seat is properly positioned the width of intake seats should be 1/16 to 3/32 inch. The width of exhaust seats should be 3/64 to 1/16 inch.

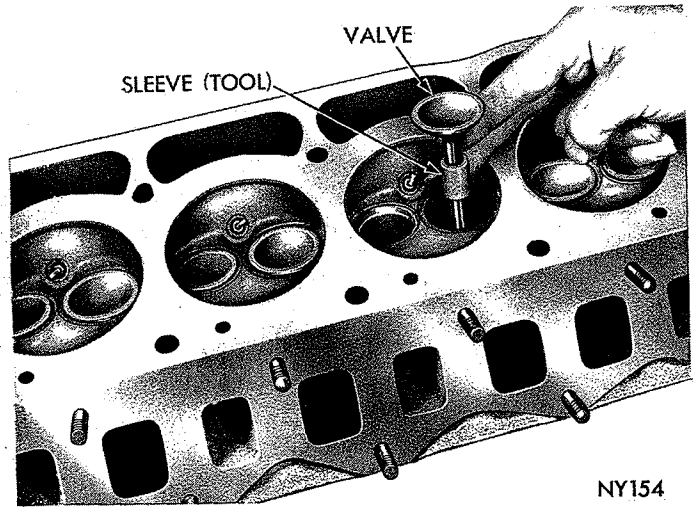


*Fig. 13—Installing Valve and Tool C-3973*

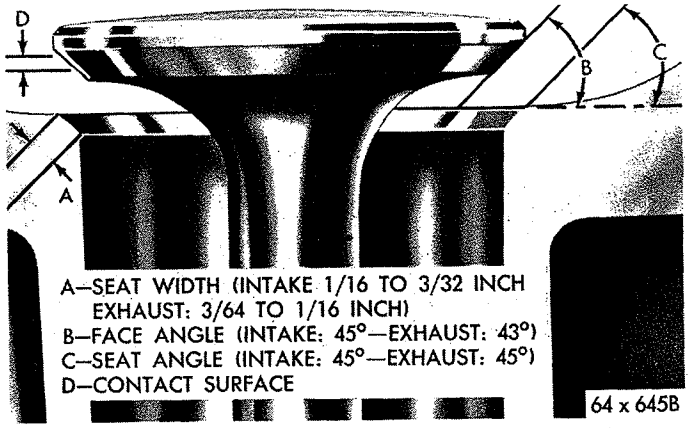


*Fig. 15—Valve Face and Seat Angle*

MyMopar.com

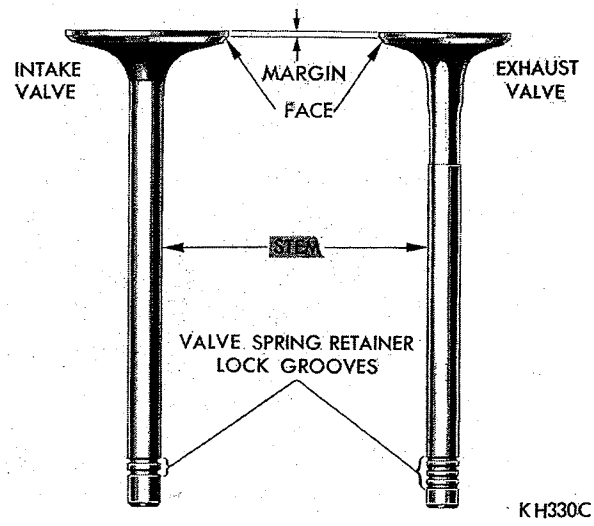


*Fig. 16—Intake and Exhaust Valves*

### Testing Valve Springs

(1) Whenever valves have been removed for inspection, reconditioning or replacement, valve springs should be tested. As an example, the compressed length of the spring to be tested is 1-5/16 inches. Turn table of Tool C-647 until the surface is in line with the 1-5/16 inch mark on the threaded stud and the zero mark to the front. Place spring over the stud on table and lift the compressing lever to set the tone device. Pull on torque wrench until ping is heard. Take reading on torque wrench at this instant. Multiply this reading by two. This will give the spring load at the test length. Fractional measurements are indicated on the table for finer adjustments. The valve springs should test 137 to 150 lbs. when compressed to 1-5/16 inches. Replace springs that do not meet these specifications.

(2) Inspect each valve spring for squareness with a steel square and surface plate, test springs from both ends, (Fig. 17).

If the spring is more than 1/16 inch out of square, install a new spring.

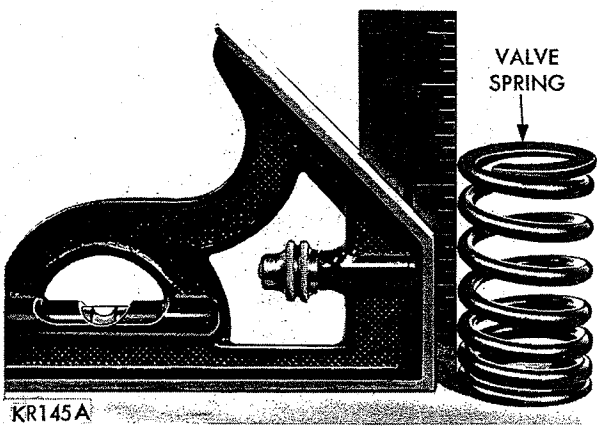


*Fig. 17—Inspecting Valve Spring Squareness*

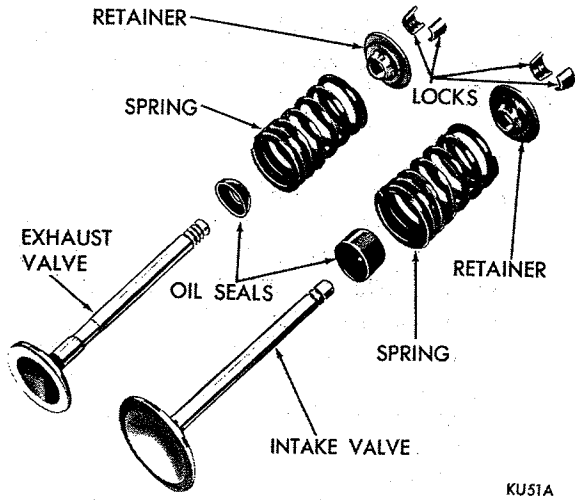


*Fig. 18—Valve Assembly*

### Installation

(1) Coat valve stems with lubrication oil and insert them in cylinder head.

(2) If valves or seats are reground, test valve stem height with Tool C-3746. If valve is too long, grind off the tip until length is within limits.

(3) Install new cup seals on all valve stems (long seal on intake valve and short seal on exhaust valve) and over valve guides (Figs. 18 and 19).—Install valve springs and retainers.

(4) Compress valve springs with Tool C-3422A, install locks and release the tool. **If valves and/or seats are reground, measure the installed height of springs. Make sure measurement is taken from the bottom of the spring seat in the cylinder head to the bottom surface of the spring retainer. (If spacers are installed, measure from the top of spacer). If height is greater than 1-11/16 inches, install a 1/16 inch spacer in the head counterbore to bring the spring height back to normal 1⅝ inches to 1-11/16 inches.**

## VALVE TIMING

(1) Rotate crankshaft until No. 6 exhaust valve is

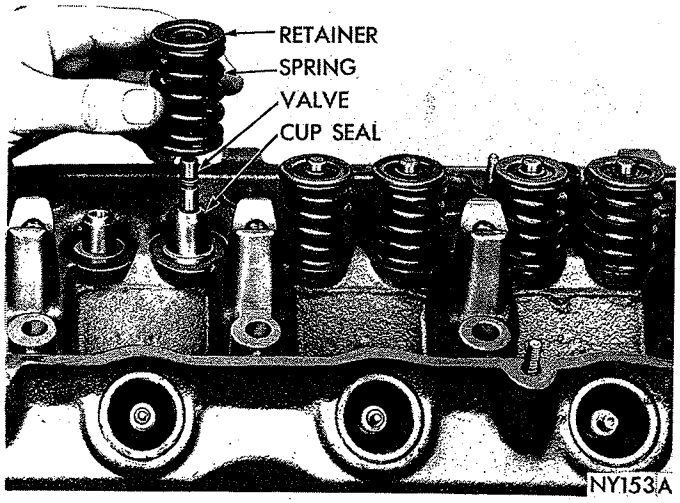


*Fig. 19—Installing Valves and Cup Seals*

MyMopar.com

closing and No. 6 intake valve is opening. Install a dial indicator so that indicator pointer contacts valve spring retainer on No. 1 intake valve parallel to the axis of the valve stem.

(2) Turn No. 1 intake adjusting screw in one complete turn to remove the lash. Adjust dial indicator to zero. Rotate crankshaft clockwise (normal running direction) until valve has lifted .019 inch for 170 cubic inch engine and .023 inch for 225 cubic inch engine. The timing of the crankshaft pulley should now read from 12 degrees before top dead center to dead center. Readjust lash.

(3) If reading is not within specified limits:

(a) Inspect sprocket index marks.

(b) Inspect timing chain for wear.

(c) Inspect accuracy of "DC" mark on timing indicator.

## TIMING SPROCKETS AND CHAIN

### Removal

(1) Drain cooling system.

(2) Remove radiator and fan.

(3) Install Tool C-3732A and pull vibration damper assembly off end of crankshaft (Fig. 20).

(4) Loosen oil pans bolts to allow clearance and remove chain case cover and gasket.

(5) Slide crankshaft oil slinger off end of crankshaft.

(6) Remove crankshaft sprocket attaching bolt.

(7) Remove timing chain with camshaft sprocket.

### Installation

(1) Turn crankshaft to line up the centerline of camshaft and crankshaft with the timing mark on crankshaft sprocket.

(2) Install camshaft sprocket and timing chain.

(3) Line up timing marks on the sprockets with the centerline of crankshaft and camshaft (Fig. 21).

(4) Tighten camshaft sprocket lock bolt to 35 foot-pounds.

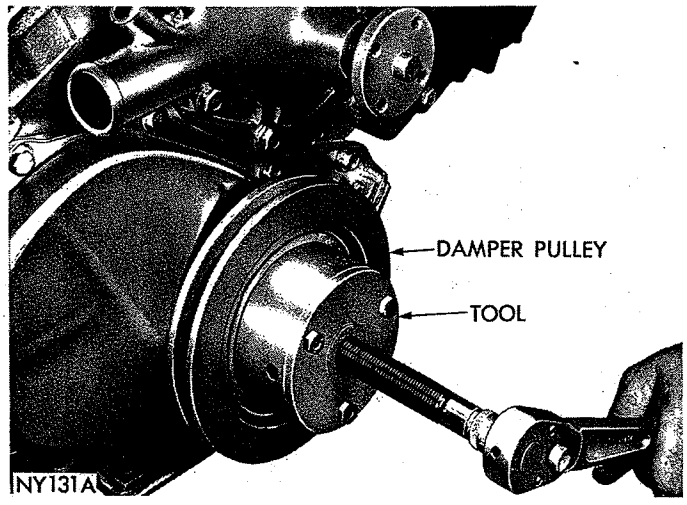


*Fig. 20—Removing Damper Assembly*

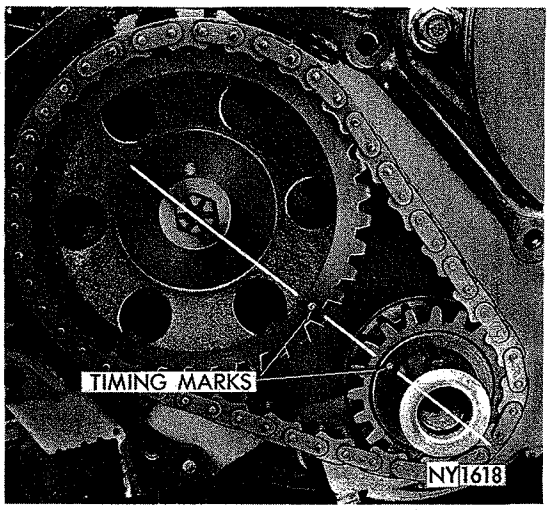


*Fig. 21—Alignment of Timing Marks*

### Measuring Timing Chain for Stretch

(1) Place a scale next to the timing chain so that any movement of the chain may be measured.

(2) Place a torque wrench and socket over the camshaft sprocket lock bolt and apply torque in the direction of crankshaft rotation to take up slack; 30 foot-pounds (cylinder head installed) or 15 foot-pounds (cylinder head removed). **With torque applied to the camshaft sprocket bolt, crankshaft should not be permitted to move. It may be necessary to block the crankshaft to prevent rotation.**

(3) Holding a scale with dimensional reading even with the edge of a chain link, apply torque in the reverse direction 30 foot-pounds (cylinder head installed) or 15 foot-pounds (cylinder head removed) and note the amount of chain movement (Fig. 22).

(4) If chain movement exceeds 3/16 inch, install a new timing chain.

(5) If chain is satisfactory, slide the crankshaft oil slinger over the shaft and up against sprocket (flange away from sprocket).

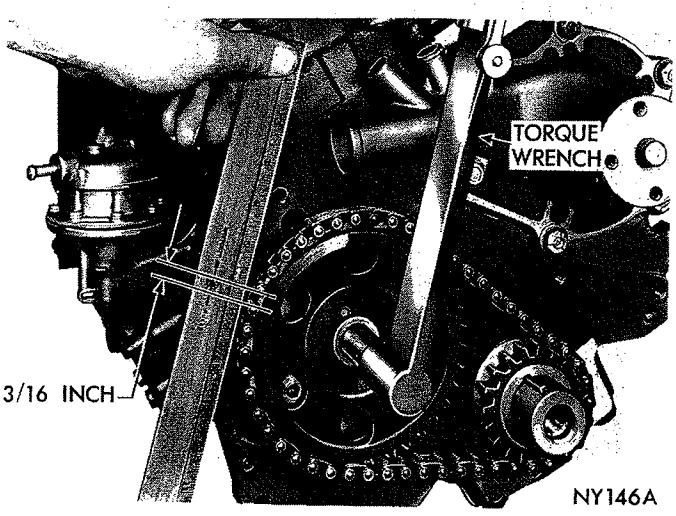


*Fig. 22—Measuring Chain Stretch*

MyMopar.com

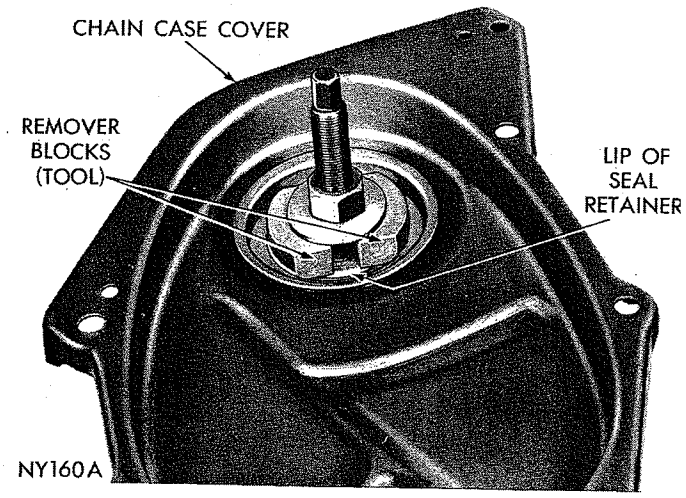


*Fig. 23—Remover Blocks Expanded to Puller Position (Tool C-3506)*

## TIMING CHAIN COVER OIL SEAL REPLACEMENT

### Removal

**It is normal to find particles of neoprene collected between seal retainer and crankshaft oil slinger after seal has been in operation.**

(1) Position remover screw of Tool C-3506 through case cover, the inside of case cover up. Position remover blocks directly opposite each other, and force angular lip between the neoprene and flange of seal retainer.

(2) Place washer and nut on the remover screw. Tighten nut forcing the blocks into the gap to a point of distorting the seal retainer lip (Fig. 23). **Remover is only positioned at this point.**

(3) Place sleeve over the retainer and install the removing and installing plate into the sleeve.

(4) Place flat washer and nut on remover screw. Hold center screw and tighten lock nut to remove seal (Fig. 24).

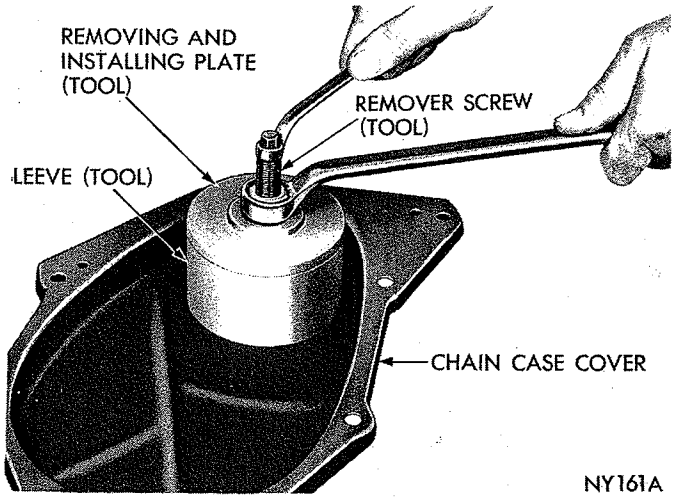


*Fig. 24—Removing Oil Seal (Tool C-3506)*

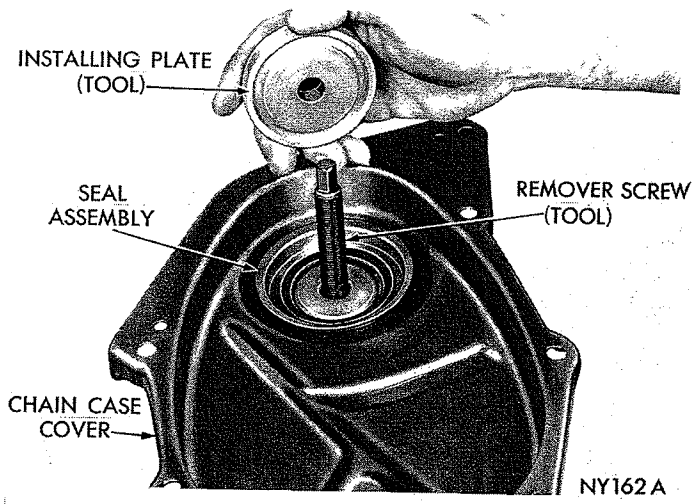


*Fig. 25—Positioning Installer Plate (Tool C-3506)*

### Installation of Oil Seal

(1) Insert remover screw through the removing and installing plate so the thin shoulder will be facing up.

(2) Insert the remover screw with the plate through the seal opening (inside of chain case cover facing up).

(3) Place the seal in cover opening, with neoprene down. Place seal installing plate into the new seal, with the protective recess toward lip of seal retainer (Fig. 25).

(4) Install flat washer and nut on the remover screw; hold screw and tighten nut (Fig. 26).

(5) Seal is properly installed when the neoprene is tight against face of cover. Try to insert a .0015 inch feeler gauge between the neoprene and cover (Fig. 27) if the seal is installed properly, the feeler gauge cannot be inserted.

### Installing Chain Case Cover

(1) Be sure mating surfaces of chain case cover and cylinder block are clean and free from burrs.

(2) Using a new gasket, slide chain case cover over locating dowels and tighten bolts to 15 foot-pounds.

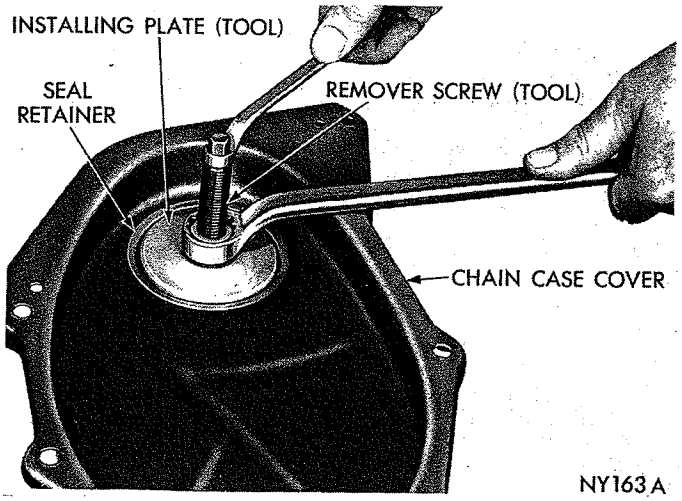


*Fig. 26—Installing New Seal (Tool C-3506)*

MyMopar.com

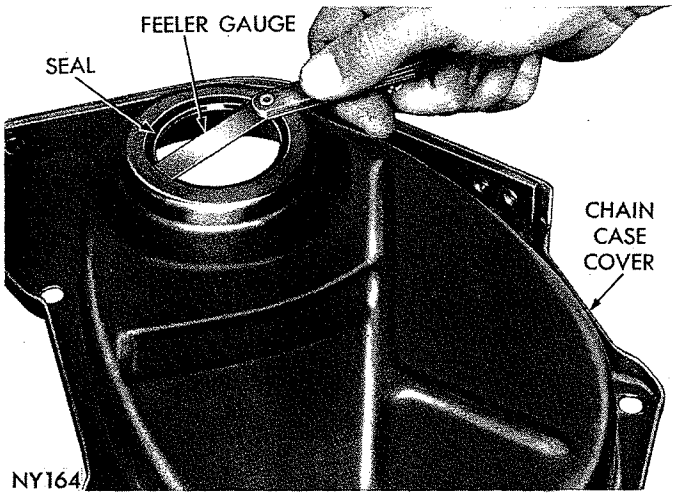


*Fig. 27—Measuring Seal for Proper Seating*

Be sure all oil pan gaskets are in place and tighten oil pan bolts to 200 inch-pounds.

### Installing a Vibration Damper and Pulley Assembly

(1) Place damper pulley assembly hub key in the slot in crankshaft, lubricate seal with Lubriplate and slide hub on the crankshaft.

(2) Place installing tool, part of puller set Tool C-3732A in position and press damper pulley assembly on the crankshaft (Fig. 28).

## CAMSHAFT

The camshaft has an integral oil pump and distributor drive gear and fuel pump eccentric (Fig. 29).

Rearward camshaft thrust is taken by the rear face of the cast iron camshaft sprocket hub, bearing directly on the front of the cylinder block, eliminating the need for a thrust plate.

The helical oil pump distributor drive gear and camshaft lobe taper both tend to produce only a rearward thrust.

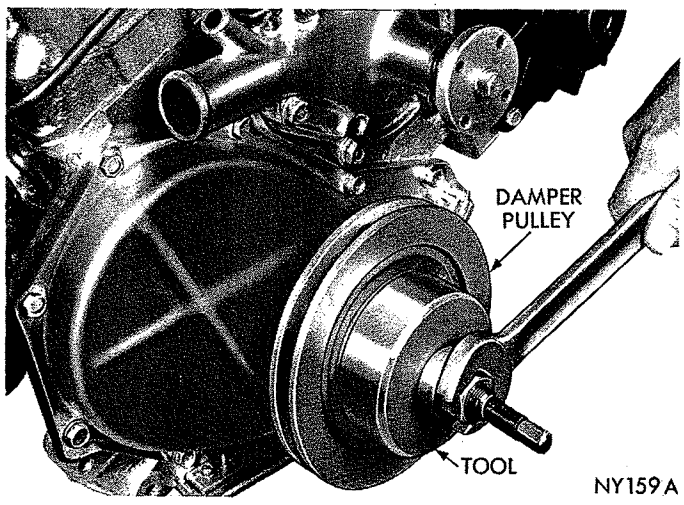


*Fig. 28—Installing Damper Assembly (Tool C-3732A)*

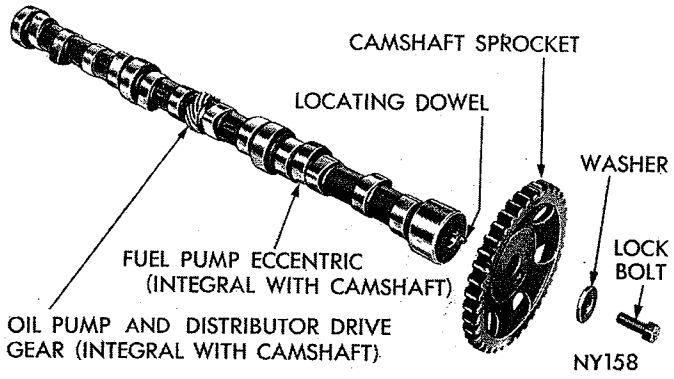


*Fig. 29—Camshaft and Sprocket Assembly*

### Removal

(1) Remove tappets, using Tool C-3661.

(2) Remove timing sprockets, distributor and oil pump.

(3) Remove fuel pump.

(4) Install a long bolt into the front of camshaft to facilitate removal of the camshaft; remove camshaft, being careful not to damage cam bearings with the cam lobes.

### Installation

(1) Lubricate camshaft lobes and camshaft bearing journals and insert the camshaft in cylinder block (Fig. 30).

**Whenever an engine is rebuilt and a new camshaft and/or new tappets are installed, one quart of MoPar Engine Supplement, part Number 1879406 or equivalent must be added to the engine oil to aid in break-in. The oil mixture should be left in the engine for a minimum of 500 miles. Drain the oil mixture at the next normal oil change.**

**When replacing camshaft, all of the tappet faces must be inspected for crown with a straight edge. If any negative crown (dish) is observed, tappet must be replaced. The tappet must have a definite crown.**

### Installation of Distributor

Before installing the distributor, time the engine as

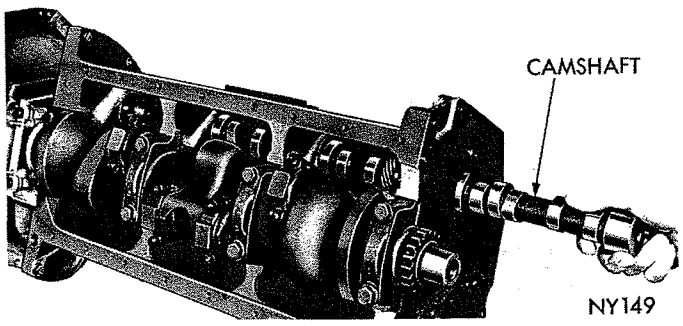


*Fig. 30—Installing Camshaft*

MyMopar.com

follows:

**The distributor rotates clockwise.**

(1) Rotate crankshaft until the mark on inner edge of crankshaft pulley is in line with the "O" (TDC) mark on the timing chain case cover. No. 1 cyl. compression stroke (both valves closed).

(2) With distributor "O" rings in position, hold the distributor over mounting pad.

(3) Turn the rotor to point forward, corresponding to 4 o'clock.

(4) Install distributor so that with distributor fully seated on the engine, the gear has spiraled to bring the rotor to a 5 o'clock position.

(5) Turn the housing until the ignition contacts are separating and rotor is under No. 1 cap tower.

(6) Install hold down bolt and connect the primary wire.

(7) Adjust timing to specifications, using a timing light, then re-connect the vacuum line.

## CAMSHAFT BEARINGS (Engine Removed from Vehicle)

### *Removal*

(1) With camshaft removed, drive out rear cam bearing welch plug.

(2) Install proper size adapters and horse shoe washers (part of Tool C-3132A) at the back of each bearing shell and drive out all bearing shells.

### *Installation*

(1) Install new camshaft bearings with Tool C-3132A by sliding the new camshaft bearing shell over the proper adapter.

(2) Position bearing in tool. Install horseshoe lock and drive the bearing shell into place, (Fig. 31). **The camshaft bearing oil hole or holes must be in exact alignment with drilled oil passage or passages from the main bearing.**

(3) Install remaining shells in like manner. **Install NO. 1 camshaft bearing 3/32 inch inward from the front face of the cylinder block.**

(4) Apply sealer to the plug and use Tool C-897 to install a new welch plug at the rear of camshaft. **Be sure this plug does not leak.**

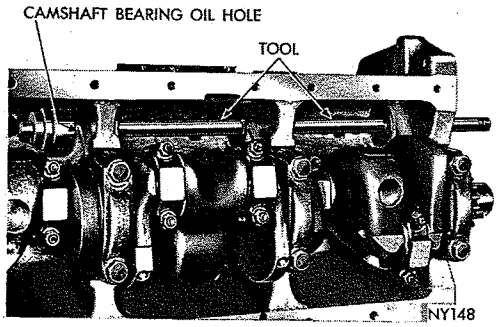


***Fig. 31—Removing Camshaft Bearings (Tool C-3132A)***

## CYLINDER BLOCK

(1) Remove the top ridge of cylinder bores using Tool C-3012 before removing pistons from cylinder block. **Keep tops of the pistons covered during this operation.**

(2) Pistons and connecting rods must be removed from top of cylinder block. Rotate crankshaft so that each connecting rod is centered in the cylinder bore.

(3) Remove connecting rod cap.

(4) Install Tool C-3221 on one connecting rod bolt and protector over the other bolt. Push each piston and rod assembly out of cylinder bore.

Be careful not to nick crankshaft journals.

(5) Install bearing caps on mating rods.

### *Inspection*

The cylinder walls should be tested for out-of-round and taper with Tool C-119. If the cylinder bores show more than .005" out-of-round, or a taper of more than .010" or if the cylinder walls are badly scuffed or scored, the cylinder block should be rebored and honed, and new oversize pistons and rings fitted. Whatever type of boring equipment is used, boring and honing operation should be closely coordinated with the fitting of pistons and rings in order that specified clearance may be maintained.

### *Honing Cylinder Bores*

Before honing, stuff plenty of clean rags under the bores, over the crankshaft to keep abrasive materials from entering crankcase area.

(1) Used carefully, the cylinder bore resizing hone Tool C-823, equipped with 220 grit stones, is the best tool for this job. In addition to deglazing, it will reduce taper and out-of-round as well as removing light scuffing, scoring or scratches. Usually a few strokes will clean up a bore and maintain the required limits.

(2) Deglazing of the cylinder walls may be done using a cylinder surfacing hone, Tool C-3501, equipped with 280 grit stones (C-3501-3801). If the cylinder bore is straight and round 20-60 strokes depending on the bore condition will be sufficient to provide a satisfactory surface. Inspect cylinder walls after each 20 strokes. Use honing oil C-3501-3880 or a light honing oil available from a major oil distributor. Do not use engine or transmission oil, mineral spirits or kerosene.

(3) Honing should be done by moving the hone up and down fast enough to get a cross-hatch pattern. When hone marks intersect at 60°, the cross hatch angle is most satisfactory for proper seating of the rings. (See Fig. 32).

(4) After honing, it is necessary that the block be cleaned again to remove all traces of abrasives.

**CAUTION: Be sure all abrasives are removed from engine parts after honing. It is recommended that a solution of soap and water be used with a brush and**

MyMopar.com

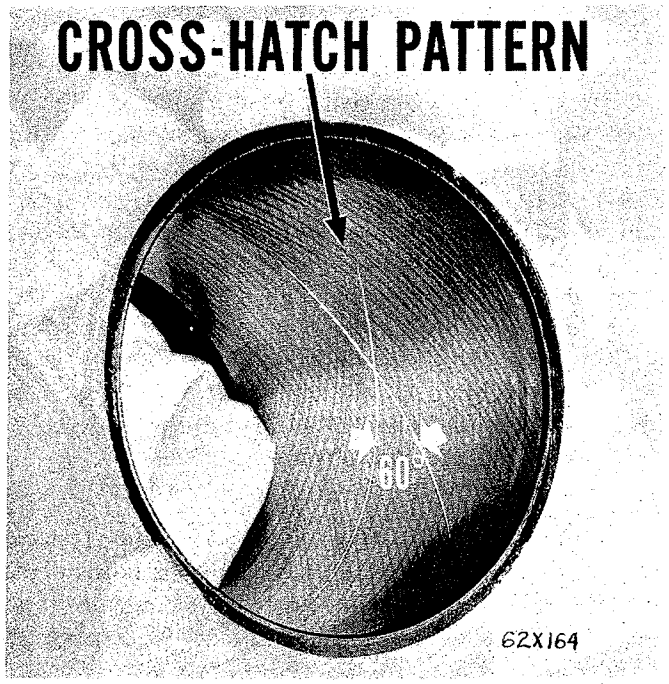


*Fig. 32—Cross Hatch Pattern*

**the parts then thoroughly dried. The bore can be considered clean when it can be wiped clean with a white cloth and cloth remains clean. Oil bores after cleaning to prevent rusting.**

## PISTONS AND RINGS

The pistons are cam ground so that the diameter at the pin boss is less than its diameter across the thrust face. This allows for expansion under normal operating conditions. The expansion forces the pin bosses away from each other, and the piston assumes a more round shape. Inspect pistons for taper and elliptical shape before they are fitted into cylinder bores. (See Fig. 33.)

### *Finished Pistons*

All pistons are machined to the same weight in grams, regardless of oversize to maintain piston balance. For cylinder bores which have been honed or rebored, all service pistons include pins and are available in standard and the following oversizes: .005, .020, .040 inch.

### *Fitting Pistons*

The piston and cylinder wall must be clean and dry. Specified clearance between the piston and cylinder wall is .0005 to 0015 inch.

(1) Pistons and cylinder bores should be measured at normal room temperature, 70 degrees F.

(2) Measure piston diameter at the top of skirt 90 degrees to piston pin axis.

(3) Measure cylinder bores halfway down cylinder bore and transverse to engine crankshaft center line.

### *Fitting Rings*

(1) Measure piston ring gap about two inches from the bottom of the cylinder bore in which it is to be fitted. (An inverted piston can be used to push rings down to insure positioning rings squarely in cylinder wall).

(2) Insert feeler stock in the gap. Ring gap should be .010 to .047 inch for compression rings and .015 to .062 inch for oil ring steel rails in standard size bores. Maximum gap in .005 inch o/s bores should be .060 inch for compression rings and .070 inch for oil ring steel rails.

(3) Measure side clearance between piston ring and ring land, (Fig. 34).

Clearance should be .0015 to .004 inch for top compression ring and intermediate ring.

(4) Starting with oil ring expander, place expander ring in lower ring groove and install oil control ring using instructions in package. Steel rail service oil ring should be free in groove, but should not exceed .005 inch side clearance.

(5) Install compression rings in middle and top grooves, using ring installer, Tool C-3805. Be sure the mark "TOP" on each compression ring is to the top of

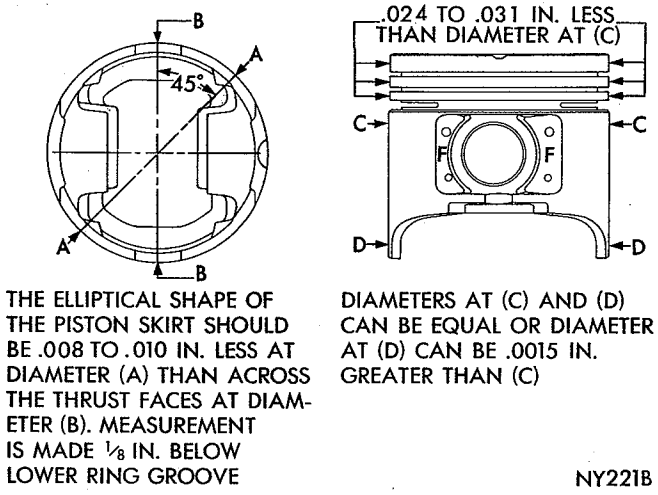


*Fig. 33—Piston Measurements*

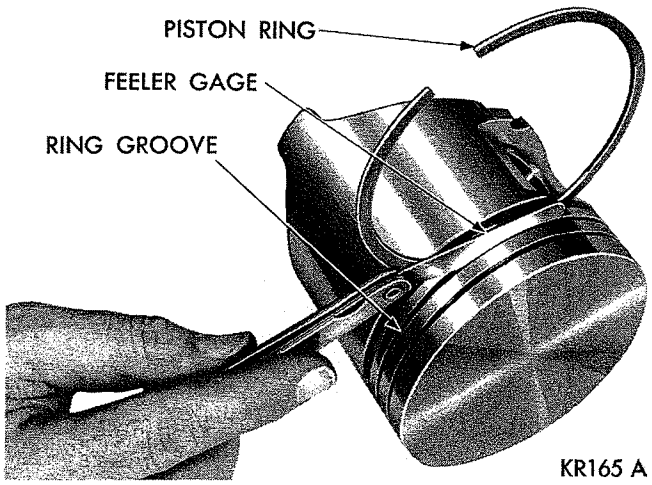


*Fig. 34—Measuring Piston Ring Clearance*

MyMopar.com

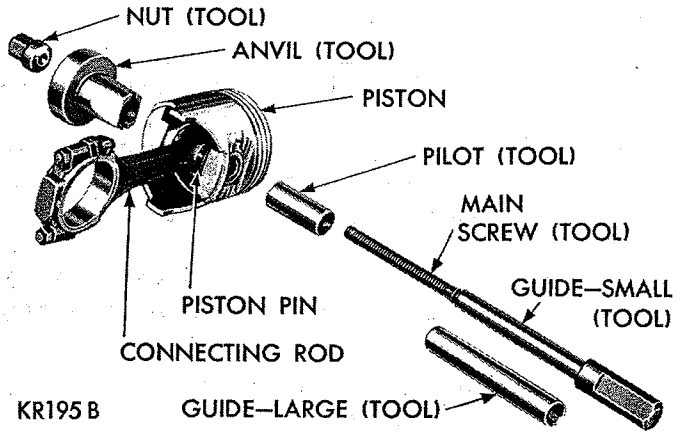


***Fig. 35—Tool Arrangement for Removing Piston Pin (Tool C-3724)***

piston.

## PISTON PIN

### *Removal*

(1) Arrange Tool C-3724 parts for removal of piston pin (Fig. 35).

(2) Install pilot on main screw.

(3) Install screw through piston pin.

(4) Install anvil over threaded end of main screw with small end of anvil against piston boss. **Be sure spring is removed from anvil.**

(5) Install nut loosely on main screw and place assembly on the press (Fig. 36). Press piston pin out of connecting rod.

**When the pin falls free from connecting rod, stop the press to prevent damage to bottom of the anvil.**

(6) Remove tool from piston.

### *Installation*

(1) Measure piston pin fit in the piston. It should be a sliding fit in piston at 70 degrees F. Piston pins are supplied in standard sizes only.

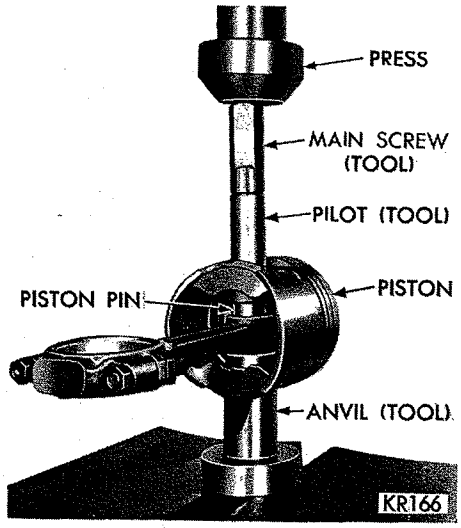


***Fig. 36—Removing Piston Pin (Tool C-3724)***

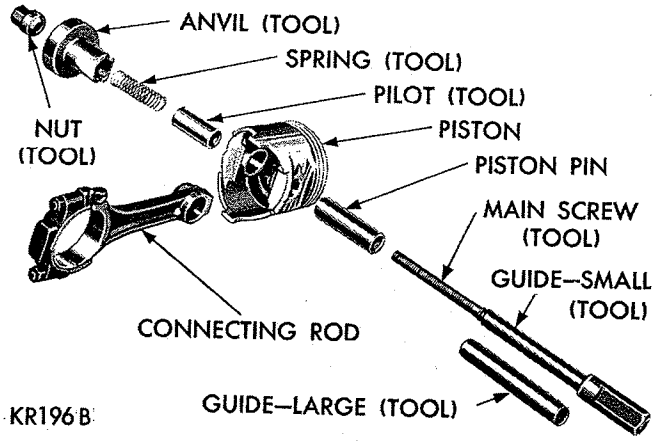


***Fig. 37—Tool Arrangement for Installing Piston Pin (Tool C-3724)***

(2) Lubricate piston pin holes in piston and connecting rod.

(3) Arrange tool parts for installation of piston pin (Fig. 37).

(4) Install spring inside the pilot and install spring and pilot in the anvil.

(5) Install piston pin over main screw.

(6) Place piston, with "Notch Front" up, over the pilot so that pilot extends through piston pin holes.

(7) Position connecting rod over the pilot which extends through piston hole. **The oil hole in connecting rod must point toward the direction shown in Figure 38.**

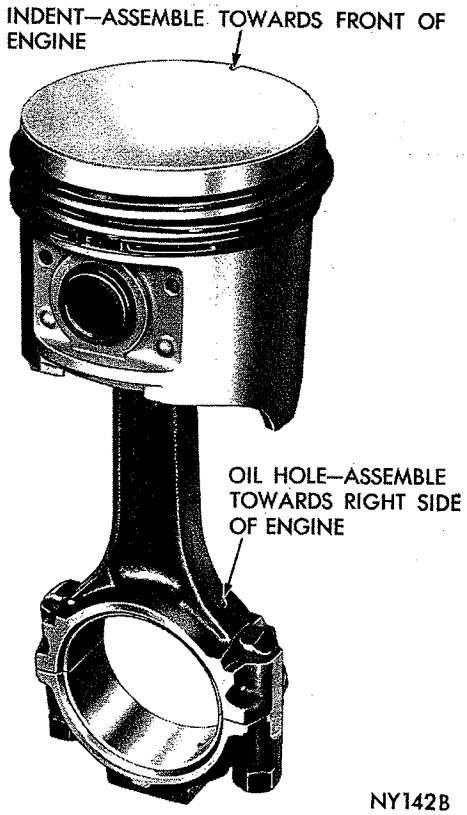


***Fig. 38—Connecting Rod Oil Hole***

MyMopar.com

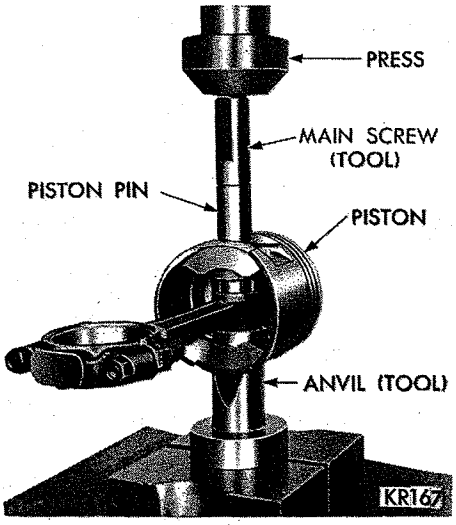


*Fig. 39—Installing Piston Pin (Tool C-3724)*

(8) Install main screw and piston pin in piston (Fig. 39).

(9) Install nut on main screw to hold assembly together. Place assembly on a press (Fig. 39).

(10) Press piston pin in the piston until pin bottoms on pilot, properly positioning pin in connecting rod.

(11) Remove tool and arrange tool parts and piston assembly in the same manner, as shown in Figure 35 for measuring pin fit.

(12) Place assembly in a vise (Fig. 40).

(13) Attach torque wrench to nut and test torque up to 15 foot-pounds. If connecting rod moves downward on the piston pin, reject this connecting rod and piston pin combination. Install a new connecting rod and repeat the installation and testing procedure.

If the connecting rod does not move under 15 foot-pounds, piston and connecting rod interference is satisfactory.

(14) Remove tool.

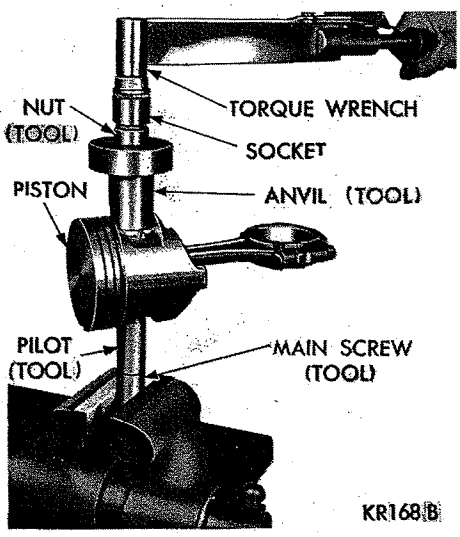


*Fig. 40—Testing Fit of Piston Pin in Connecting Rod (Tool C-3724)*

## CONNECTING RODS

### *Installing Connecting Rod Bearings*

(1) Install connecting rod bearings so small formed tang fits into machined groove in connecting rod.

(2) The limits of taper or out-of-round on any crankshaft journal should be held to .001 inch. Bearings are available in standard .001, .002, .003, .010 and .012 inch undersize.

(3) Install bearings in pairs. **Do not use a new bearing with an old bearing. Do not file rods or bearing caps.**

## MEASURING CONNECTING ROD BEARING CLEARANCE

### *Shim Stock Method*

(1) Smooth the edges of a ½ x ¾ inch piece of brass shim stock, .001 inch thickness.

(2) Oil and place between the bearing and connecting rod journal.

(3) Install bearing cap and tighten to 45 foot-pounds.

(4) Turn connecting rod ¼ turn in each direction. A slight drag should be felt which indicates clearance is satisfactory. Correct clearance is from .0005 to .0015 inch.

(5) Side play should be from .006 to .012 inch.

### *Installing Piston and Connecting Rod Assembly in Cylinder Block*

(1) Compression ring gaps should be located on the left side of the engine and staggered about 60° apart. Neither gap should line up with oil ring rail gaps.

(2) Rotate oil ring expander so that ends are at right side of engine. Rotate steel rails so that gaps are approximately opposite and positioned above piston pin holes.

(3) Immerse piston head and rings in clean engine oil. Slide the ring compressor, Tool C-385, over the piston and tighten with special wrench (part of Tool C-385). **Position of rings must not change during this operation.**

(4) The notch on top of piston must point toward front of engine so that squirt hole in connecting rod is toward right side of engine.

(5) Screw connecting rod bolt protector (part of Tool C-3221) on one rod bolt, and insert rod and piston into cylinder bore. **Rotate crankshaft so that connecting rod journal is on the center of cylinder bore.**

(6) Attach puller part of Tool C-3221 on other bolt, and guide rod over the crankshaft journal (Fig. 41). Be careful not to nick connecting rod journals.

(7) Tap piston down in cylinder bore, using handle of a hammer. At the same time, guide connecting rod into position on crankshaft journal.

(8) Install rod caps, tighten nuts to 45 foot-pounds.

## CRANKSHAFT MAIN JOURNALS

Crankshaft journals should be inspected for exces-

MyMopar.com

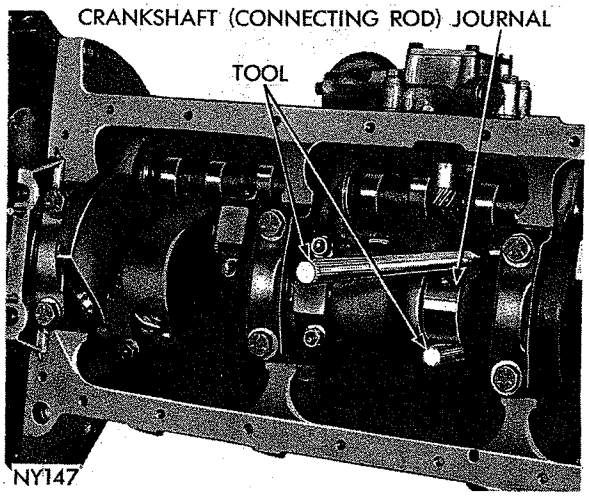


***Fig. 41—Removing and Installing Connecting Rod (Tool C-3221)***

sive wear, taper and scoring. Journal grinding should not exceed .012 inch under the standard journal diameter. Do not grind thrust faces of No. 3 main bearing. Do not nick connecting rod or main bearing journal fillets. After regrinding, remove rough edges from crankshaft oil holes and clean out all oil passages.

## CRANKSHAFT MAIN BEARINGS

The NOs. 1, 2 and 4 lower main bearings are interchangeable (Fig. 42). The NOs. 2 and 4 upper main bearings are interchangeable.

The NO. 1 upper main bearing **is not interchangeable and is chamfered** on the tab side for timing chain oiling and can be identified by a red marking on the edge of the bearing. Upper main bearings are grooved and lower main bearings are plain and are not **interchangeable.** The NO. 3 upper and lower main bearings are flanged to carry the crankshaft thrust loads and **are not interchangable** with any other main bearings in the engine. **Bearings that are not badly worn, scored or pitted should be reinstalled in the same bearing bore.**

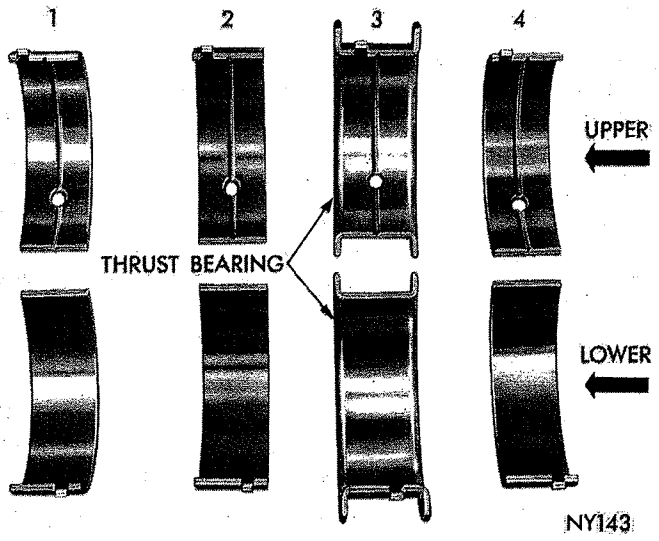


***Fig. 42—Main Bearing Identification***

The bearing caps are not interchangeable and the numbers should be marked at removal to insure correct assembly. Bearings are available in standard and the following undersizes, .001, .002, .003, .010 and .012 inch. Never install an undersize bearing that will reduce the clearance below specifications.

### *Removal*

(1) Remove oil pan and inspect the bearing cap identifying numbers.

(2) Remove bearing caps one at a time. Remove upper bearing by inserting Tool C-3059 (Fig. 43) into oil hole on crankshaft.

(3) Slowly rotate crankshaft clockwise, forcing out upper bearings.

## MEASURING MAIN BEARING CLEARANCE

### *Shim Stock Method*

(1) Position crankshaft in block.

(2) Smooth the edges of a ½ x ¾ inch piece of brass shim stock, .001 inch thickness.

(3) Lubricate main bearing journals and position shim stock across center main journals.

(4) Install bearing in center main bearing cap, **bearing tang in groove on cap,** lubricate bearing and seat cap on block. Tighten bolts to 85 foot-pounds.

(5) If a slight drag is felt as the crankshaft is rotated, not over ¼ turn in either direction the clearance is .001 inch or less and is considered satisfactory.

If however, no drag is felt, the bearing is too large or if the crankshaft cannot be rotated, the bearing is too small and should be replaced with the correct size.

It is permissible to use one .001 inch undersize bearing shell with one standard bearing shell, or one .002 inch undersize bearing shell with one .001 inch undersize shell. Always use the smaller diameter

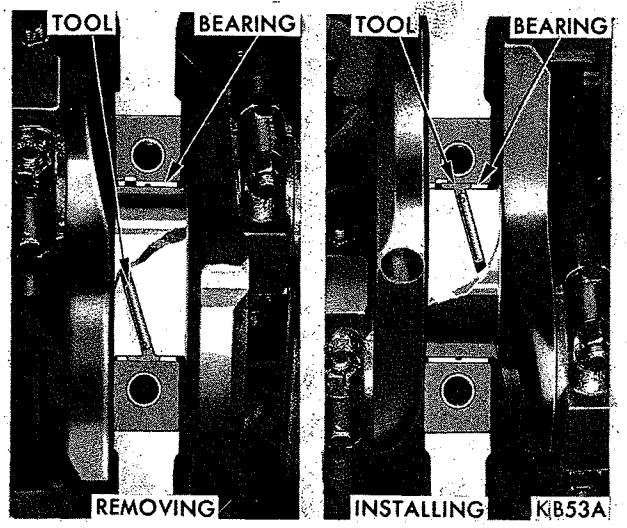


***Fig. 43—Removing and Installing Upper Main Bearing (Tool C-3059)***

MyMopar.com

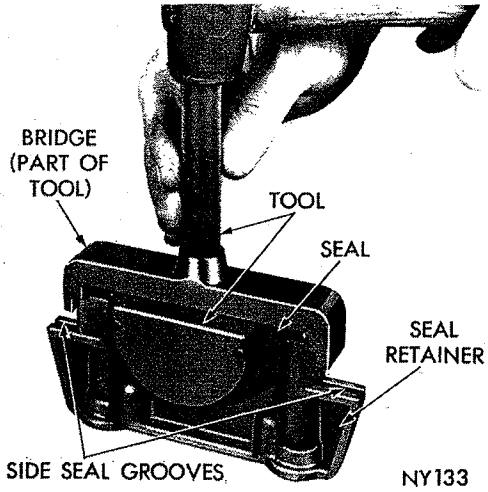


*Fig. 44—Installing Rear Main Bearing Oil Seal (Tool C-3743)*

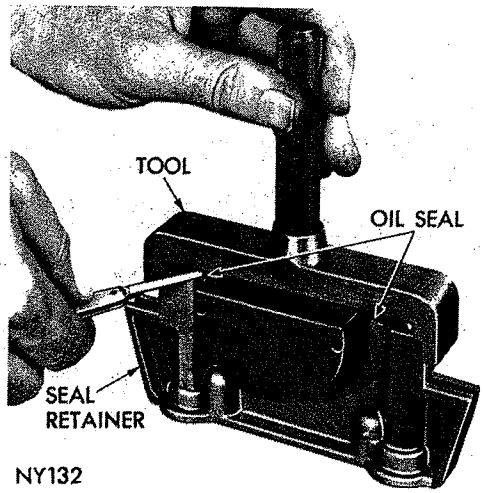


*Fig. 45—Trimming Rear Main Bearing Oil Seal (Tool C-3743)*

bearing half as the upper. Do not use a new bearing with a used bearing and never use an upper bearing half more than .001 inch smaller than the lower bearing half.

(6) Fit remaining bearings in same manner.

(7) Measure crankshaft end play to .002-.007 inch. If end play is more than .007 inch, install a new center bearing.

## REPLACEMENT OF THE REAR MAIN BEARING OIL SEAL—Crankshaft Removed

### Cylinder Block

(1) Install a new oil seal in the cylinder block so that both ends protrude.

(2) Tap seal down into position, using Tool C-3743 (with bridge removed) until the tool is seated in the bearing bore.

(3) Hold tool in this position and cut off the portion of the seal that extends above the block on both sides.

### Bearing Cap

(1) Install a new seal in seal retainer so that ends protrude (Fig. 44).

(2) Install the bridge on the tool and tap seal down into position until tool is seated.

(3) Trim off portion of seal that protrudes above cap (Fig. 45).

(4) Install two side seals in grooves in seal retainer.

(5) When installing seal retainer, tighten screws to 30 foot-pounds.

# ENGINE OILING SYSTEM

## OIL PAN

### Removal 170 or 225 Cubic Inch Engine (106" Wheelbase)

(1) Raise vehicle on hoist. Drain oil pan.

(2) Using tie rod end puller, Tool C-3742, remove steering and idler arm ball joints from steering linkage center link. Remove dust shield and motor mount stud nuts.

(3) Lower vehicle disconnect negative ground cable from the battery and remove the horns and mounting brackets.

(4) Install engine lifter plate Tool C-3804 and fixture C-3809. Raise engine from 1½ to 2 inches.

(5) Again raise vehicle on hoist and remove oil pan.

### 225 Cubic Inch Engine (116", 117", 119" and 121" Wheelbase)

(1) Raise vehicle on a hoist. Drain oil pan.

(2) Using tie rod end puller, Tool C-3742, remove steering and idler arm ball joints from steering center link. Remove dust shield.

(3) Remove oil pan attaching bolts, rotate engine crankshaft to clear counterweights and remove oil pan.

### Cleaning and Inspection

Clean oil pan in solvent and wipe dry with a clean cloth. Scrape all gasket material from mounting surface of pan and crankcase.

Inspect oil drain plug and plug hole for stripped or damaged threads and repair as necessary. Install a new drain plug gasket.

Inspect oil pan mounting flange for bends or distortion. Straighten flange if necessary.

Clean oil screen and pipe thoroughly in clean solvent. Inspect condition of screen.

Install oil screen and pipe. Turn pipe in until it begins to tighten in the crankcase, continue tightening until screen is positioned (Fig. 47). Hold a steel rule against flat surface inside the case and measure from edge of rule to edge of oil screen. Measurement should be 1⅛ inches with screen prop-

MyMopar.com

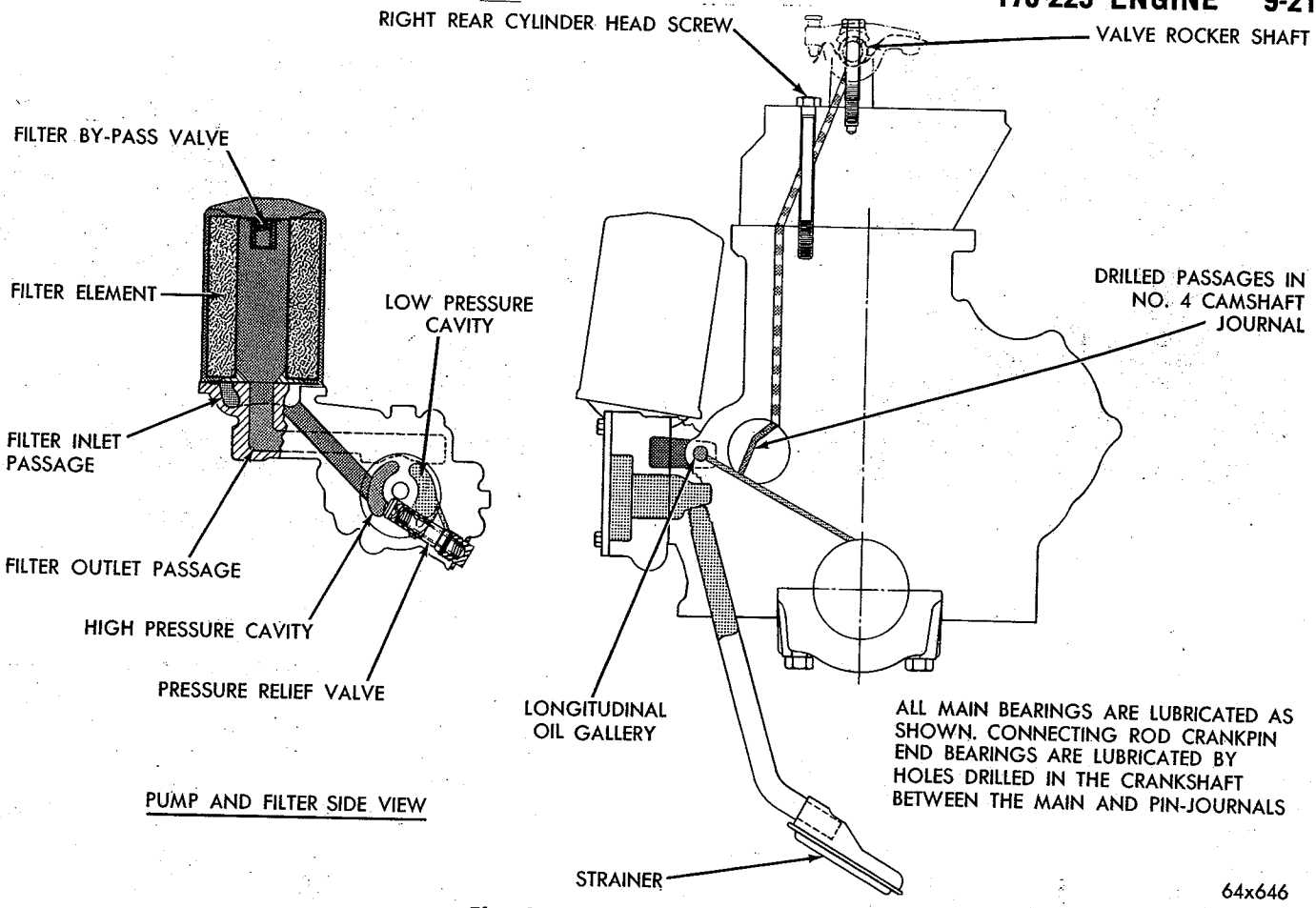


**Fig. 46—Engine Oiling System**

erly positioned.

Screen must be an interference with bottom of oil pan.

### Installation

#### 170 or 225 Cubic Inch Engine (106" Wheelbase)

(1) Using a new pan gasket, install oil pan and tighten bolts to 200 inch-pounds.

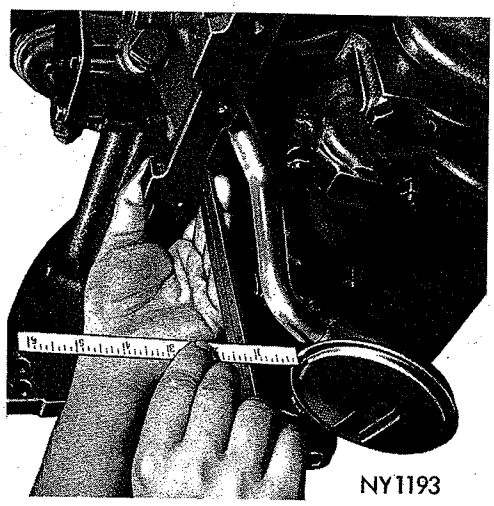


**Fig. 47—Positioning Oil Pick-up Tube and Screen**

(2) Connect steering and idler arm ball joints to center link. Tighten retaining nuts to 40 foot-pounds, and secure with cotter pins. Install dust shield.

(3) Lower vehicle on hoist, then lower the engine down into position. Remove lifting fixture and plate.

(4) Install horns and mounting brackets, and install the air cleaner.

(5) Again raise the vehicle on the hoist and install motor mount stud nuts. Tighten to 75 foot-pounds.

(6) Lower vehicle and fill crankcase to recommended level with proper grade of motor oil. Connect negative ground cable at battery.

#### 225 Cubic Inch Engine (116", 117", 119" and 121" Wheelbase)

(1) Using a new oil pan gasket set, install the oil pan and tighten bolts to 200 inch-pounds.

(2) Connect steering and idler arm ball joints to center link. Tighten retaining nuts to 40 foot-pounds and secure with cotter pins. Install dust shield.

(3) Lower vehicle and fill crankcase to recommended level with proper grade of motor oil. Connect negative ground cable at battery.

## OIL PUMP

### Removal

(1) Drain radiator, disconnect upper and lower

MyMopar.com

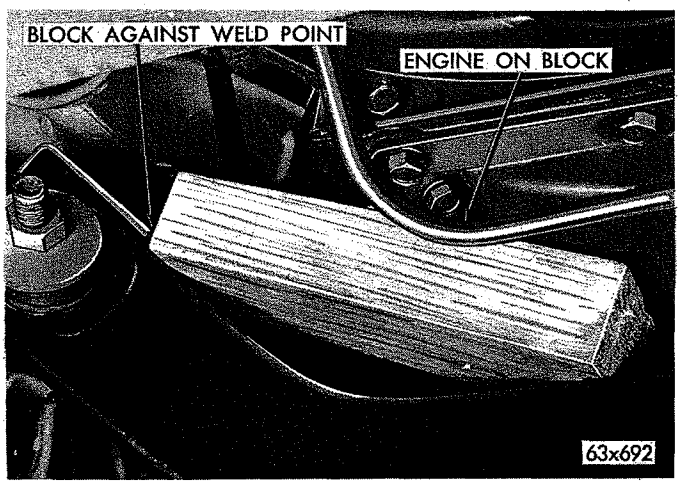


Fig. 48—Positioning Block

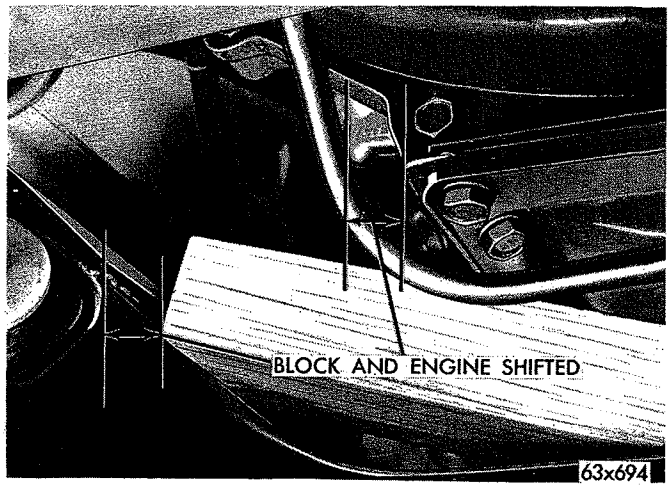


Fig. 50—Engine Relocated

hoses.

(2) Disconnect fuel line at fuel pump inlet.

(3) Disconnect throttle linkage at carburetor and lay it over the engine.

(4) With vehicle on a hoist, support front of engine with a jack stand placed under the right front corner of engine oil pan. **(Do not support the engine at the crankshaft pulley or vibration damper.)** Remove front engine mounts.

(5) Cut a piece of wood 2x4, eight inches long.

(6) Raise front of engine just high enough to insert the piece of 2x4 between front rail of "K" member and right front lower portion of engine oil pan. Position the block, as shown in Figure 48 so one end is against the edge of right front engine mount support where it is welded to "K" member.

(7) Lower front of engine so it rests on the 2x4 block near the right front corner of oil pan.

(8) Exert a light pressure, with a pry bar, against right side of the engine (Fig. 49).

(9) This will cause the 2x4 block and front of engine to slide to the left approximately 1½ inches (Fig. 50).

(10) This movement will also cause engine to tip slightly toward the left.

(11) Remove engine oil filter, and remove oil pump cover and outer rotor.

**CAUTION: Outer rotor will drop out when pump cover is removed. Do not allow rotor to be damaged by falling.**

(12) If above instructions have been followed closely, just enough clearance will be provided between engine and "K" member to allow removal of oil pump.

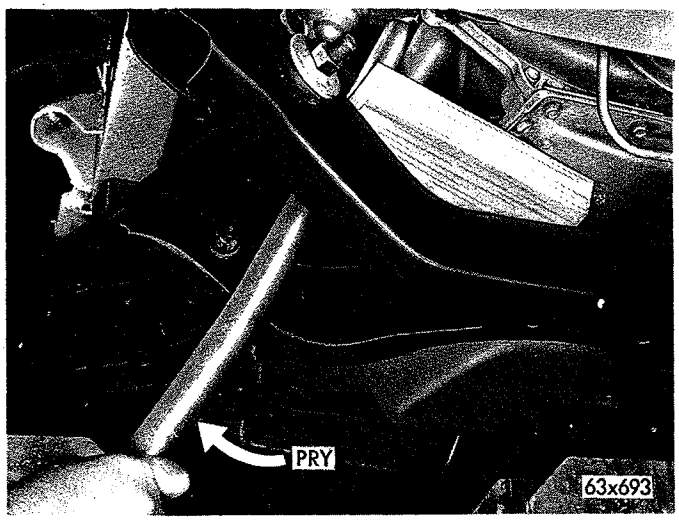


Fig. 49—Moving Engine

## Disassembly (Fig. 51)

(1) Remove pump cover and seal ring.

(2) Press off drive gear. Support gear to keep the load off of aluminum body.

(3) Remove pump rotor and shaft and lift out outer pump rotor.

(4) Remove oil pressure relief valve plug and lift out spring and plunger (Fig. 51).

## Inspection and Repair

(1) Clean all parts thoroughly. Mating face of oil

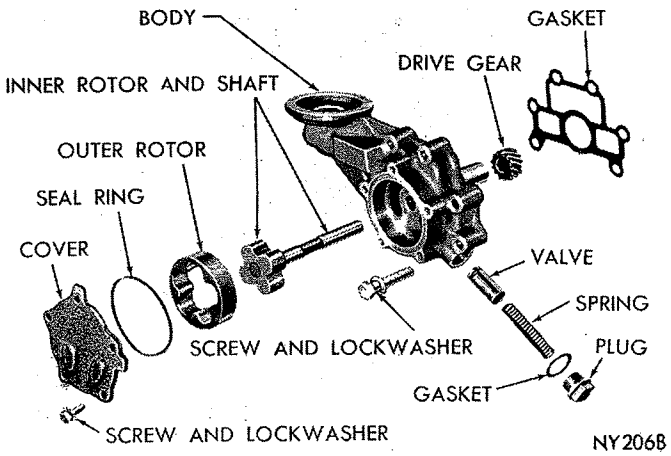


Fig. 51—Oil Pump Disassembled View

MyMopar.com

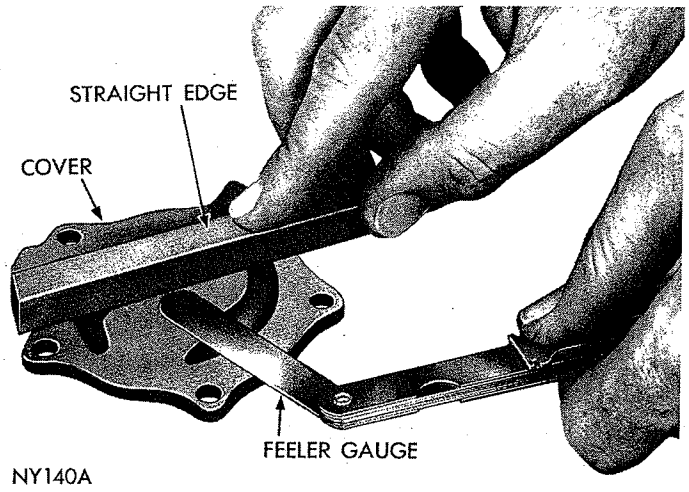


***Fig. 52—Measuring Oil Pump Cover Flatness***

pump cover should be smooth. Replace cover if it is scratched or grooved.

(2) Lay a straightedge across the oil pump cover surface (Fig. 52). If a .0015 inch feeler gauge can be inserted between cover and straightedge, cover should be replaced.

(3) If outer rotor length measures less than .649 inch (Fig. 53), and the diameter less than 2.469 inches, replace outer rotor.

(4) If inner rotor length measures less than .649 inch (Fig. 54), replace inner rotor.

(5) Slide outer rotor and inner rotor into pump body and place a straightedge across face between bolt holes (Fig. 55).

(6) If a feeler gauge of more than .004 inch can be inserted between the rotors and straightedge, replace pump body.

(7) Remove inner rotor and shaft leaving outer rotor in pump cavity.

(8) Press outer rotor body to one side with fingers and measure clearance between outer rotor and pump body (Fig. 56). If measurement is more than .012 inch.

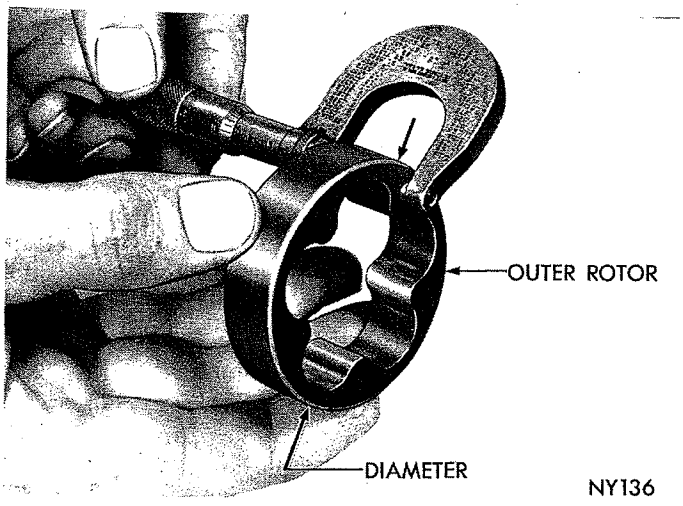


***Fig. 53—Measuring Outer Rotor Thickness***

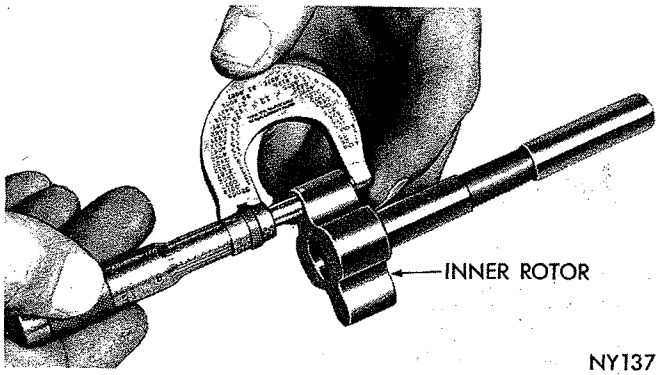


***Fig. 54—Measuring Inner Rotor Thickness***

replace oil pump body.

(9) If clearance between inner rotor and outer rotor (Fig. 57) is more than .010 inch, replace inner and outer rotors.

(10) Inspect oil pump relief valve plunger for scoring and for free operation in its bore. Small scores may be removed with 400 grit wet or dry paper providing extreme care is used not to round off the sharp

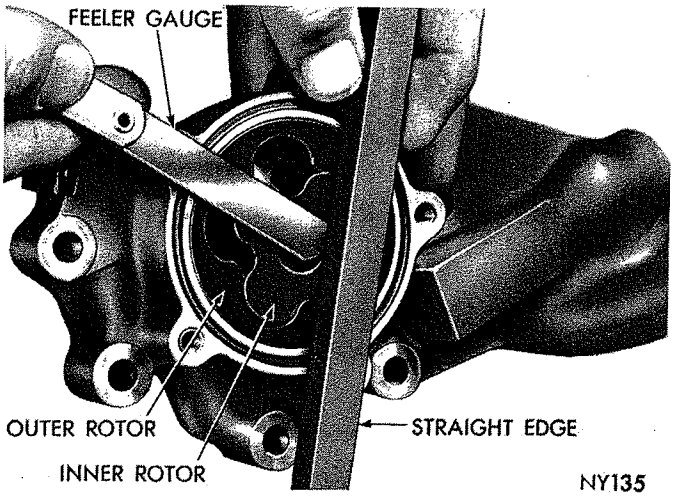


***Fig. 55—Measuring Clearance Over Rotors***

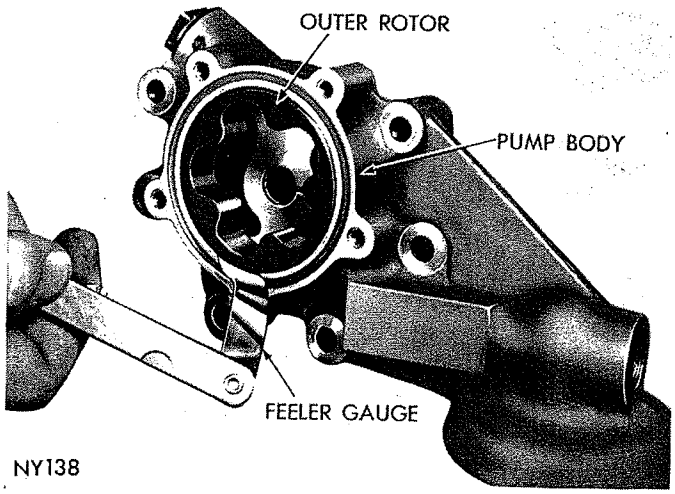


***Fig. 56—Measuring Outer Rotor Clearance***

MyMopar.com

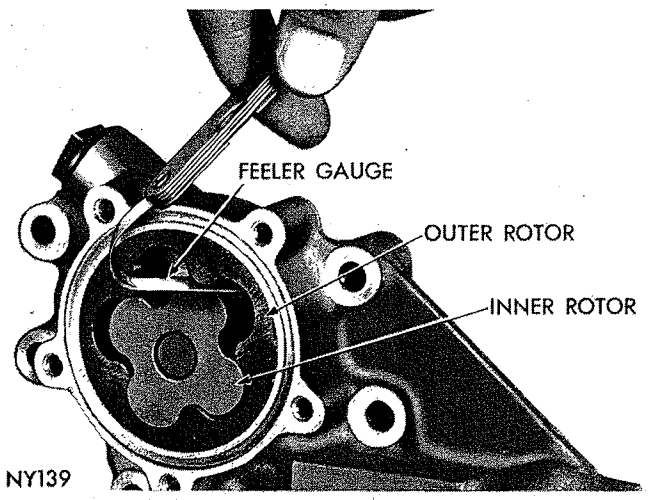


*Fig. 57—Measuring Clearance Between Rotors*

edge portion of valve.

(11) For 170-225 cubic inch engines the relief valve spring has a free length of 2-9/32 to 2-19/64 inch and is red in color.

(12) If oil pressure is low, inspect for worn bearings, or look for other causes of possible loss of oil pressure.

### *Assembly*

(1) Assemble pump, using new parts as required.

(2) Install new oil seal rings between cover and body. Tighten cover bolts to 130 inch-pounds.

### *Installation*

(1) Install oil pump, without outer rotor and cover, using a new gasket.

(2) Install outer rotor, seal, pump cover and oil filter.

(3) Center the engine to its original position. Using a jack stand to support front end of engine, and install front engine mounts.

(4) Connect fuel line, throttle linkage, upper and lower radiator hoses.

(5) Refill radiator.

## OIL FILTER

The oil filter should be replaced to coincide with every second oil change.

(1) Using Tool C-3845, unscrew filter from base of oil pump and discard.

(2) Wipe base clean.

(3) Screw new filter on the base until gasket on filter contacts base.

(4) To obtain an effective seal, tighten filter by **hand** the additional number of turns **indicated on the replacement filter.** Start engine and inspect for leaks.

# EIGHT CYLINDER ENGINES

## 273-318 CUBIC INCH

## INDEX


| | Page | | Page |
|---|---|---|---|
| Camshaft Bearings | 35 | Installing Piston and Connecting Rod Assembly in Cylinder Block | 39 |
| Camshaft Installation | 35 | Installation of Rear Main Bearing Oil Seals | 40 |
| Camshaft Removal | 34 | Measuring Connecting Rod Bearing Clearance | 39 |
| Connecting Rod—Identification | 38 | Measuring Main Bearing Clearance | 40 |
| Crankshaft Main Bearings | 40 | Oil Pan | 41 |
| Crankshaft Main Journals | 40 | Oil Pump | 41 |
| Crankcase Ventilation System | 67 | Pistons, Pins and Rings | 37 |
| Cylinder Block | 36 | Repair of Damaged or Worn Threads | 69 |
| Cylinder Heads | 28 | Rocker Arms and Shaft Assembly | 27 |
| Distributor Drive Shaft Bushing | 36 | Timing Chain Cover Oil Seal Replacement | 34 |
| Engine Assembly | 26 | Timing Sprockets and Chain | 32 |
| Engine Mounts | 25 | Tune-Up | 24 |
| Engine Oiling System | 41 | Valves and Valve Springs | 29 |
| Installation of Connecting Rod Bearings | 39 | Valve Timing | 32 |


# SERVICE PROCEDURES

## TUNE-UP

(1) Test battery specific gravity, add water if necessary, clean and tighten battery connections.

(2) Test cranking voltage if below 9.6 volts and more than 130 amperes draw see Starting Motor Cranking Voltage Electrical Section of this manual.

(3) Tighten the intake manifold bolts to 270 inch-pounds for 273 cubic inch engine and 40 foot-pounds for 318 cubic inch engine.

(4) Perform cylinder compression test. Compression should not vary more than 20 pounds.

(5) Clean or replace spark plug as necessary and adjust gap to .035 inch. Tighten to 30 foot-pounds using new gaskets.

(6) Test resistance of spark plug cables. Refer to

MyMopar.com

"Ignition System Secondary Circuit Inspection" Electrical Section.

(7) Inspect the breaker plate contacts, primary wire and vacuum advance operation. Replace parts as necessary. Refer to Ignition System and make necessary adjustment. Test coil output voltage, primary and secondary resistance. Test Condenser.

(8) Install distributor, distributor cap, and spark plug cables. Reset ignition timing with vacuum advance line disconnected. Ignition timing should be set to compensate for altitudes and/or gasoline grades.

(9) Set carburetor idle mixture adjustment. Adjust throttle stop screw to specifications. Perform a combustion analysis.

(10) Test fuel pump for pressure and vacuum. Refer to "Fuel System" Group 14, Specifications.

(11) Inspect manifold heat control valve in the right exhaust manifold for proper operation and apply Manifold Heat Control Valve Solvent Part Number 1879318 or equivalent to the bushing and shaft.

(12) Every 6 months, remove air cleaner filter element and blow out dirt gently with air hose. Direct air from inside out, and keep nozzle 2 inches away from element to avoid damaging. Clean metal housing and replace element (Fig. 1). Every two years, install a new factory recommended MoPar filter element or equivalent. Service unit more frequently when driving under severe conditions, such as in dusty areas.

(13) Inspect crankcase ventilation system as outlined on page 67.

(14) Inspect and adjust accessory belt drives referring to "Cooling System," Group 7, for proper adjustments.

(15) Road test vehicle as a final test.

## FRONT ENGINE MOUNTS (Figs. 2 and 3)

### Removal

(1) Disconnect throttle linkage at transmission and at carburetor.

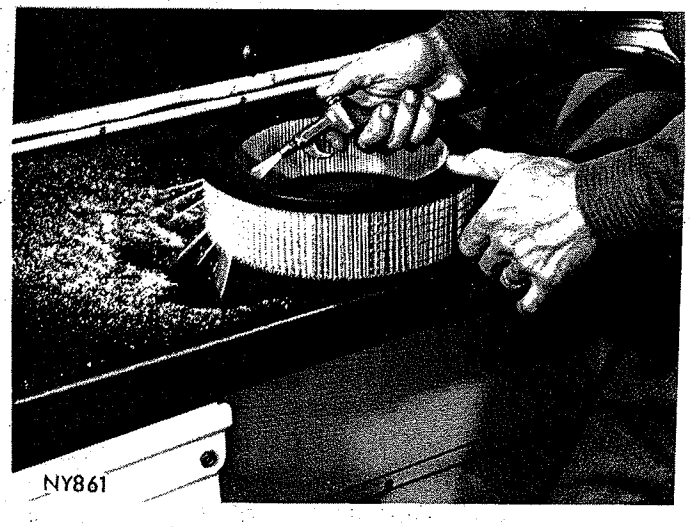


*Fig. 1—Cleaning Filter Element*

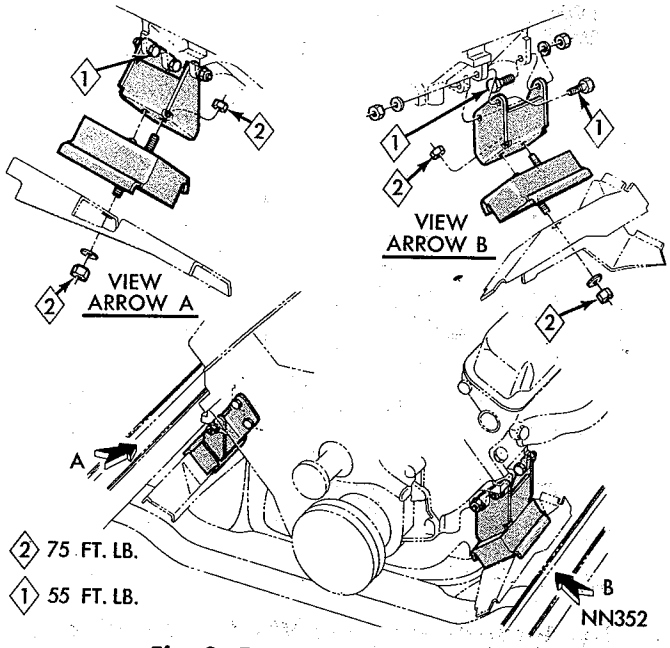


*Fig. 2—Front Engine Mounts (273 Cubic Inch 106" Wheelbase)*

(2) Raise hood and position fan to clear radiator hose and radiator top tank.

(3) Remove torque nuts from insulator studs.

(4) Raise engine just enough to remove front engine mount assembly.

### Installation

(1) Install insulator to engine bracket and tighten to specified torque.

(2) Lower engine and install washers and prevailing torque nuts to insulator studs; tighten nuts to specified torque.

(3) Connect throttle at transmission and carburetor.

## REAR ENGINE MOUNT (Figs. 4, 5, 6 and 7)

### Removal

(1) Raise vehicle on hoist.

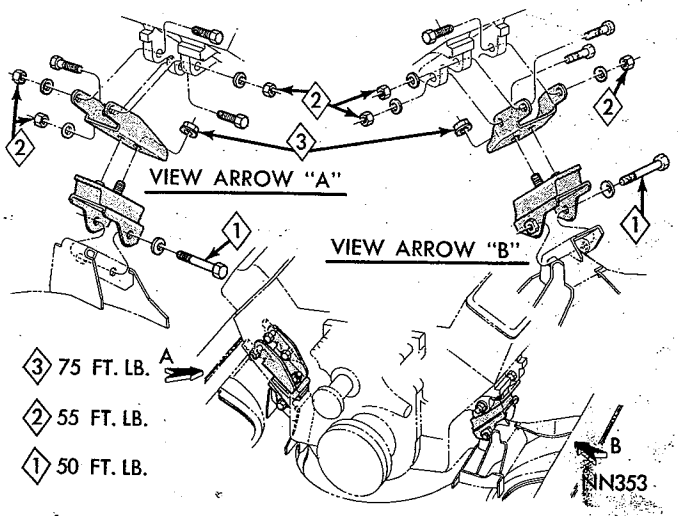


*Fig. 3—Front Engine Mounts (273-318 Cubic Inch 116", 117", 119" and 121" Wheelbase)*

MyMopar.com

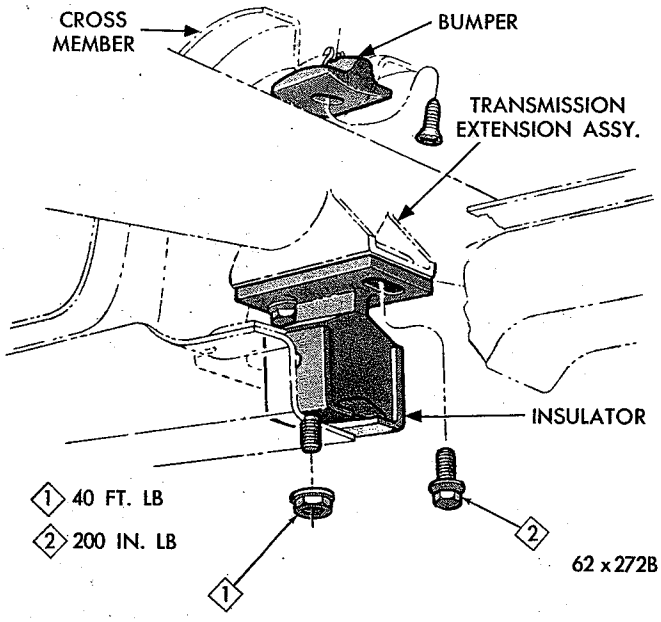


*Fig. 4—Engine Rear Support (106" Wheelbase)*

(2) Install transmission jack.

(3) Remove rear engine crossmember from frame and remove rear mount.

### Installation

(1) Install rear engine mount to crossmember and tighten nut to specified torque.

(2) Install rear crossmember to frame and tighten bolts to specified torque.

(3) Remove transmission jack.

(4) Install rear engine mount to transmission bolts and tighten to specified torque.

(5) Lower vehicle.

## ENGINE ASSEMBLY

### Removal

(1) Scribe outline of hinge brackets on the hood to assure proper adjustment when installing. Remove hood.

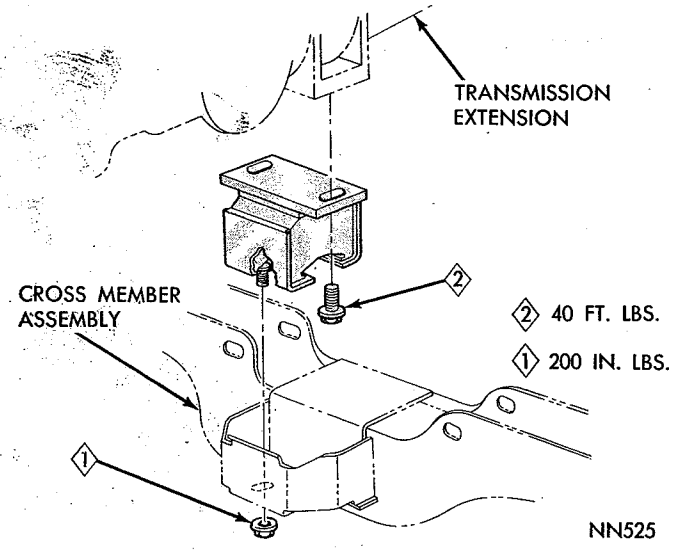


*Fig. 5—Engine Rear Support (116" and 117" Wheelbase except 4-Speed Transmission)*

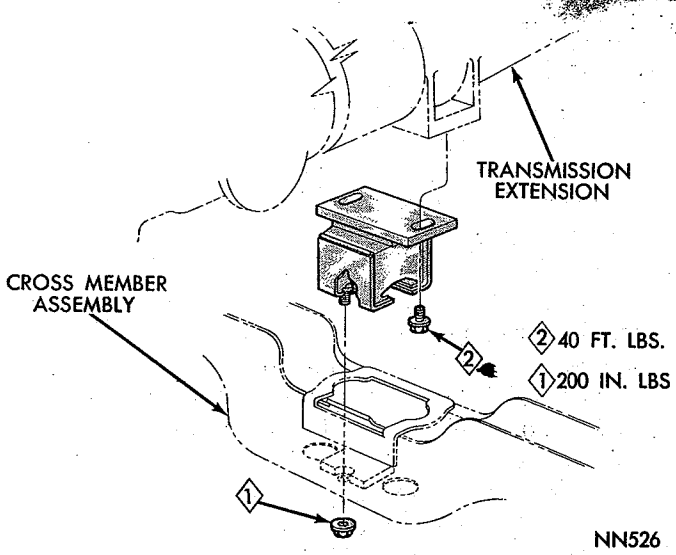


*Fig. 6—Engine Rear Support (116" and 117" Wheelbase with 4-Speed Transmission)*

(2) Drain cooling system and remove battery.

(3) Remove all hoses, fan shroud (or air conditioned vehicles), oil cooler lines and radiator.

(4) Disconnect fuel lines, linkage and wires attached to engine units and remove air cleaner and carburetor.

(5) Attach engine lifting fixture Tool C-3466 to carburetor flange studs on intake manifold.

(6) Raise vehicle on a hoist and install engine support fixture Tool C-3487 on the chassis to support rear of engine.

(7) Drain transmission.

(8) Disconnect exhaust pipes at the manifolds, propeller shaft, wires linkage, speedometer cable, and oil cooler lines at transmission.

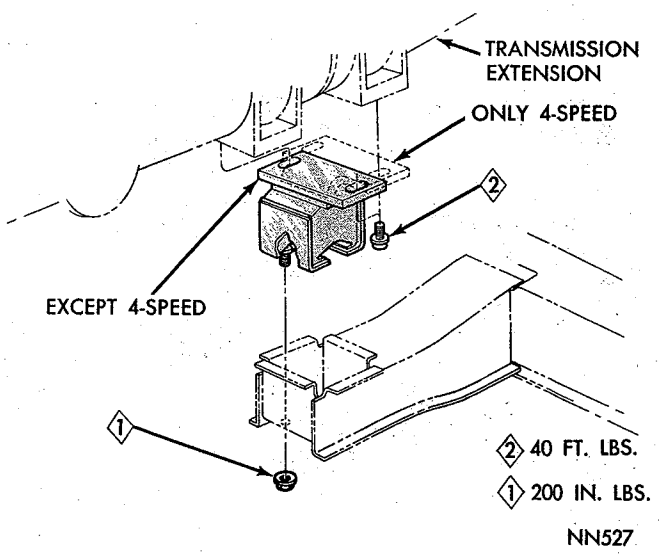


*Fig. 7—Engine Rear Support (119" and 121" Wheelbase)*

MyMopar.com

(9) Remove engine rear support crossmember and remove transmission from vehicle.

(10) Lower vehicle and attach a crane or other suitable lifting tool to fixture eyebolt.

(11) Remove engine front mounts. Raise engine with lifting tool and work engine out of chassis.

(12) Place engine in repair stand C-3167 and adapter C-3662 for disassembly using transmission mounting bolts.

### Installation

(1) Attaching engine lifting fixture Tool C-3466 to carburetor flange studs on intake manifold.

(2) Attach a crane or other suitable lifting tool to fixture eyebolt.

(3) Remove engine from repair stand and lower engine carefully until engine is positioned in the chassis with front engine mounts in place.

(4) Install engine support fixture Tool C-3487 on chassis to support rear of engine. Remove the crane or lifting tool.

(5) Raise vehicle on a hoist, install the transmission, engine rear support crossmember, tighten front engine mounts, remove the engine support fixture, Tool C-3487.

(6) Connect propeller shaft, wires, linkage, speedometer cable, oil cooler lines at transmission, connect exhaust pipes to manifolds. Install transmission filler tube.

(7) Lower vehicle and remove engine lifting fixture Tool C-3466 from engine. Install carburetor and fuel lines.

(8) Install radiator, fan shroud, hoses, oil cooler lines and connect all wires and linkage.

(9) Install hood using scribe marks for proper alignment.

(10) Close all drain cocks and fill cooling system, install battery.

(11) Fill engine crankcase and transmission. Refer to "Lubrication" Group 0, for quantitities and lubricants to use. Inspect entire system for leaks and correct as necessary.

**Whenever an engine has been rebuilt and/or a new camshaft and/or new tappets have been installed, add one quart of MoPar Engine Supplement Part Number 1879406 or equivalent to engine oil to aid break-in. The oil mixture should be left in engine for a minimum of 500 miles, and drained at the next normal oil change.**

(12) Start engine and run until normal operating temperature is reached.

(13) Adjust the tappets, hot; intake .013 inch, exhaust .021 inch.

(14) Test timing (with vacuum advance line removed) and adjust carburetor and transmission linkage as necessary. Connect vacuum lines, install air cleaner and road test the vehicle.

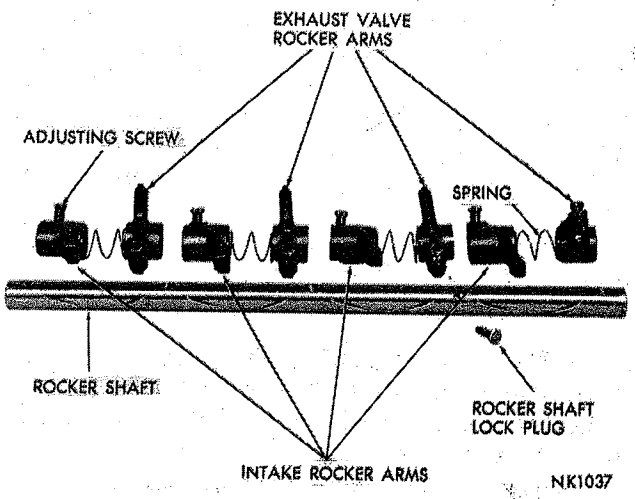


*Fig. 8—Rocker Shaft Assembly (318 Cubic Inch)*

## ROCKER ARMS AND SHAFT ASSEMBLY

### Removal (273 Cubic Inch Engine)

(1) Disconnect spark plug wires by pulling on the boot straight out in line with plug.

(2) Disconnect closed vent system from right cylinder head cover.

(3) Remove cylinder head cover and gasket.

(4) Remove five rocker shaft bolts and retainers.

(5) Remove rocker arms and shaft assembly.

### Removal (318 Cubic Inch Engine)

For cleaning, inspection or installation of new parts, remove the cylinder heads from the engine on 318 Cubic Inch Engines. Refer to Cylinder Head Assembly.

Remove lock plug, slide the rocker shaft out of the rocker shaft struts disengaging rocker arms and springs (Fig. 8).

### Installation (273 Cubic Inch Engine)

(1) Install rocker arm and shaft assemblies with

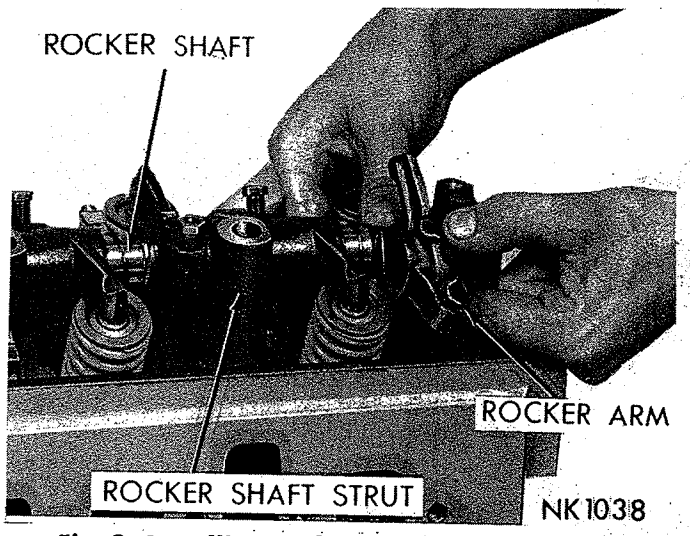


*Fig. 9—Installing Rocker Arms (318 Cubic Inch)*

MyMopar.com

"NOTCH" on end of rocker shaft pointing to centerline of engine and toward front of engine on the left bank and to the rear on right bank, making sure to install the long stamped steel retainers in the number two and four positions, tighten to 30 foot-pounds.

(2) Adjust tappets. Hot; intake .013 inch, exhaust .021 inch.

(3) Install cylinder head cover and tighten to 40 inch-pounds.

(4) Install closed crankcase ventilation system.

### *Installation (318 Cubic Inch Engine)*

Slide rocker shaft into bore of strut and at the same time engage intake rocker arm (Fig. 9). Install spring and engage exhaust rocker arm. Install remainder of the rocker arms in same sequence. Make sure that head bolt holes in rocker shaft line up with head bolt holes in rocker shaft strut. In addition, plug hole in strut must also line up with hole in rocker shaft. Tap in rocker arm shaft plug (Fig. 10). Install plugs in both ends of rocker arm shaft.

## CYLINDER HEADS

The chrome alloy cast iron cylinder heads shown in Figure 11 are held in place by 10 bolts. The spark plugs are located in peak of the wedge between the valves.

### *Removal*

(1) Drain cooling system and disconnect battery ground cable.

(2) Remove alternator, carburetor air cleaner and fuel line.

(3) Disconnect accelerator linkage.

(4) Remove vacuum control hose between carburetor and distributor.

(5) Remove distributor cap and wires.

(6) Disconnect coil wires, heat indicator sending unit wire, heater hoses and by-pass hose.

(7) Remove closed vent system and cylinder head covers.

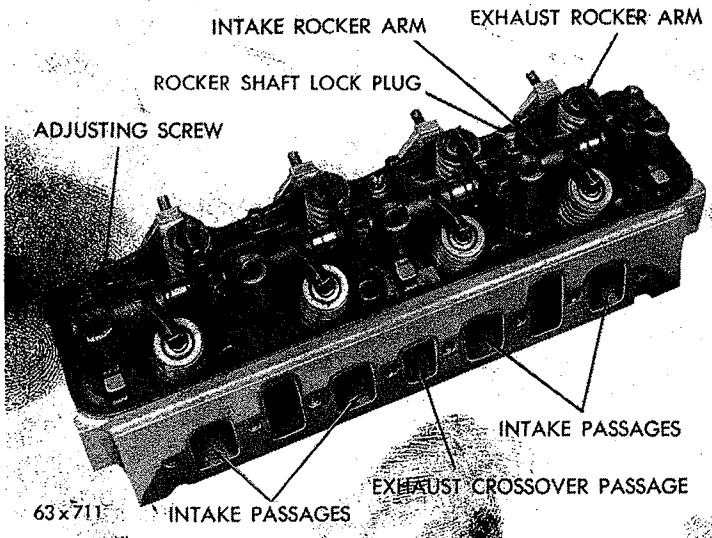


*Fig. 10—Cylinder Head Assembly (318 Cubic Inch)*

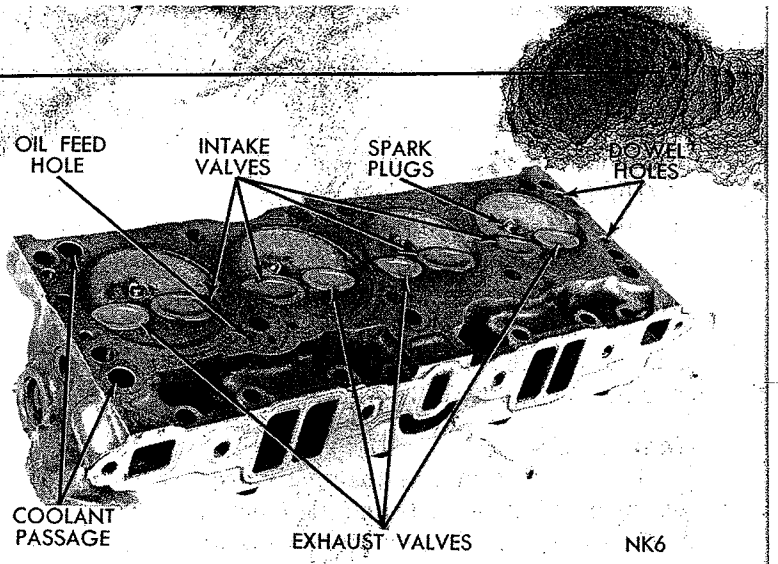


*Fig. 11—Cylinder Head (273 Cubic Inch)*

(8) Remove intake manifold, ignition coil and carburetor as an assembly.

(9) Remove exhaust manifolds.

(10) On 273 Cubic Inch, remove rocker arm and shaft assemblies, pull push rods and place them in their respective slots in holder Tool C-3068.

**The 318 Cubic Inch Engine push rods are removed with cylinder head and rocker arm assemblies.**

(11) Remove the 10 head bolts from each cylinder head and remove cylinder heads.

(12) Place cylinder heads in holding fixture Tool C-3626. Remove push rods and place them in their respective slots in holder Tool C-3068 and remove spark plugs.

### *Installation*

(1) Clean all gasket surfaces of cylinder block and cylinder heads.

(2) Inspect all surfaces with a straightedge if there is any reason to suspect leakage.

(3) Coat new gaskets with number 1057794 Sealer and install on cylinder block.

(4) Remove cylinder heads from holding fixtures Tool C-3626 and place heads on engine.

(5) Install cylinder head bolts. Starting at top center, tighten all cylinder head bolts to 50 foot-pounds in sequence, as shown in Figure 12. Repeat procedure, retighten all cylinder head bolts to 85 foot-pounds.

(6) On 273 Cubic Inch install push rods, rocker arm and shaft assemblies with the "NOTCH" on the end of rocker shaft pointing to centerline of engine and toward front of engine on the left bank and to the rear on right bank, making sure to install the long stamped steel retainers in the number two and four positions, tighten to 30 foot-pounds.

(7) Inspect push rods and replace worn or bent rods.

(8) On 318 Cubic Inch install push rods with ball end in tappets, using Tool C-3695 to position socket

MyMopar.com

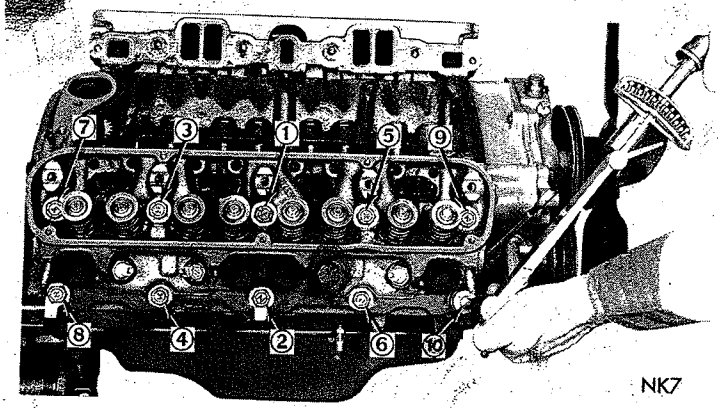


*Fig. 12—Cylinder Head Tightening Sequence (Typical)*

end of push rod under rocker arm (Fig. 13) **make certain low point of camshaft lobe is under tappet.**

(9) Coat intake manifold gaskets and side seals with number 1057794 sealer or equivalent. Install intake manifold gaskets with the bead down and end seals locked in the tangs of head gasket. Add a drop of sealer in the "V" notches of side seals after installation.

(10) (a) On **273 Cubic Inch Engine** position intake manifold on engine and install the twelve attaching cap screws "Finger Tight" in the tightening sequence shown in Figure 14. Tighten cap screws one through four to 60 inch-pounds and tighten remaining cap screws to 60 inch-pounds, then retighten cap screws one through four to 270 inch-pounds and follow by retightening the remaining cap screws to 270 inch-pounds in sequence shown.

(b) On **318 Cubic Inch Engine** install intake manifold, tighten manifold bolts to 40 foot-pounds.

(11) Install exhaust manifolds with new gaskets,

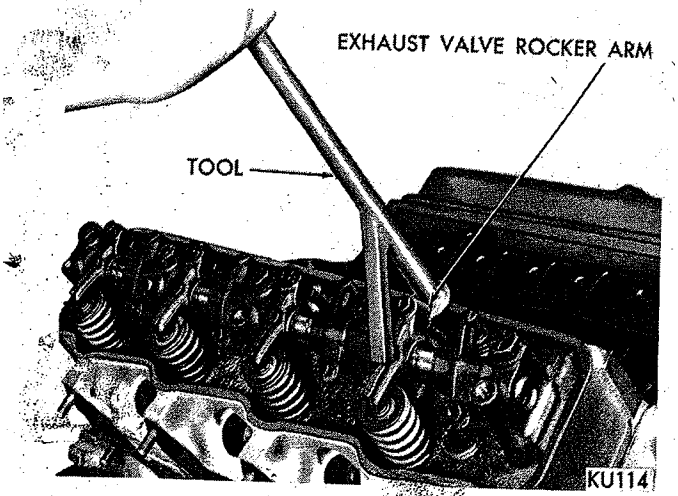


*Fig. 13—Compressing Exhaust Valve Spring (Tool C-3695, 318 Cubic Inch)*

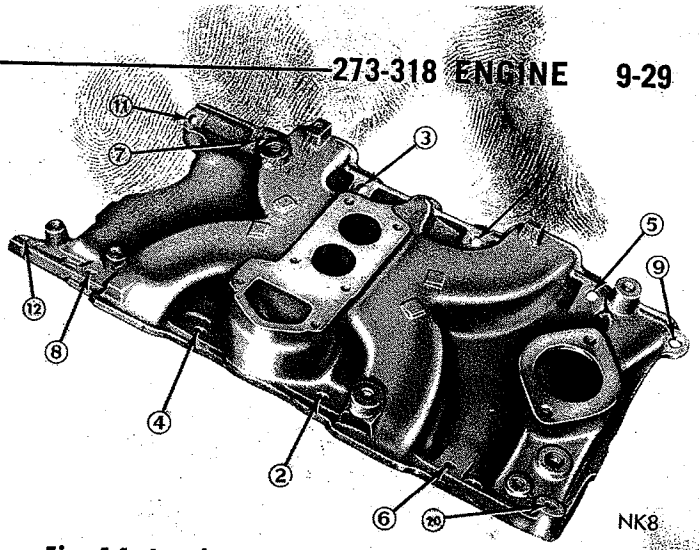


*Fig. 14—Intake Manifold Tightening Sequence (273 Cubic Inch)*

the extended shield is used on left side, tighten to 30 foot-pounds.

(12) Adjust spark plugs to .035 inch gap and install the plugs tightening to 30 foot-pounds.

(13) Install coil wires, heat indicator sending unit wire, heater hoses and by-pass hose.

(14) Install vacuum control hose between carburetor and distributor.

(15) Install accelerator linkage and adjust as necessary.

(16) Install distributor cap and wires.

(17) Install fuel line, alternator and drive belt. Tighten alternator bracket bolts to 30 foot-pounds and adjusting strap mounting bolt to 30 foot-pounds. See Cooling Section on adjusting belt tension.

(18) Fill cooling system and install battery ground cable.

(19) Operate engine until normal operating temperature is reached (approximately 180°F. water temperature).

(20) Allow engine to idle at 550 rpm at this temperature for five minutes.

(21) Adjust the tappets, hot; intake .013 inch, exhaust .021 inch.

(22) Place new cylinder head cover gaskets in position and install cylinder hear covers. Tighten to 40 inch pounds.

(23) Install closed crankcase ventilation system.

## VALVES AND VALVE SPRINGS

Valves are arranged in line on the 273 cubic inch engine and are staggered on the 318 cubic inch engine. Valve guides are integral with the heads.

### *Removal*

(1) With cylinder head removed, compress valve springs using Tool C-3422A, as shown in Fig. 15.

(2) Remove valve retaining locks, valve spring retainers, valve stem cup seals and valve springs. **Remove any burrs from the valve stem lock grooves to prevent damage to the valve guide when valves are removed.**

MyMopar.com

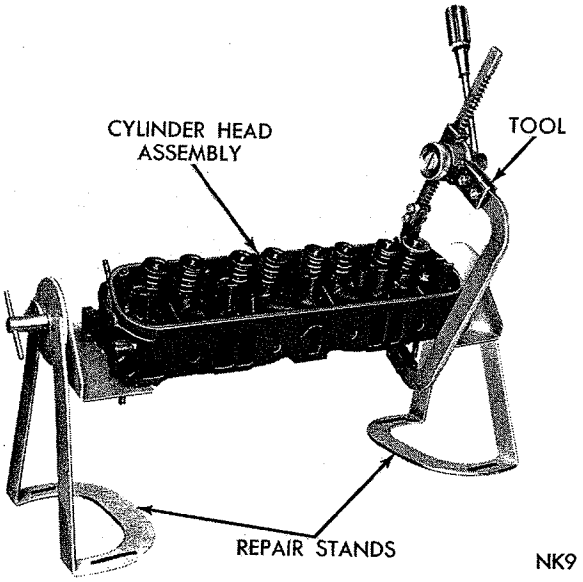


*Fig. 15—Compressing Valve Spring (Typical)*

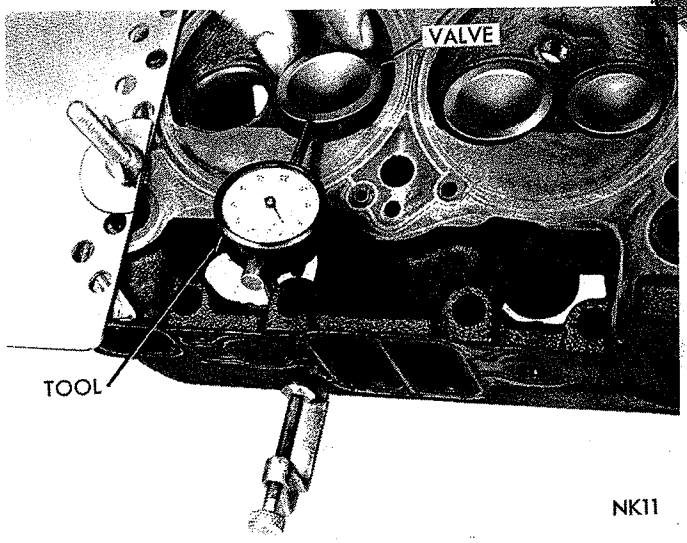


*Fig. 17—Measuring Valve Guide Wear using Tool C-3339*

### Valve Inspection

(1) Clean valves thoroughly and discard burned, warped and cracked valves.

(2) Measure valve stems for wear. New intake valve stem diameter should measure .372 to .373 inch and exhaust valve stem diameter should measure .371 to .372 inch. If wear exceeds .002 inch, replace valve.

(3) Remove carbon and varnish deposits from inside of valve guides with cleaner, Tool C-756.

(4) Measure valve stem guide clearance as follows:

(a) Install sleeve Tool C-3973 over valve stem (Fig. 16) and install valve. The special sleeve places the valve at the correct height for checking with a dial indicator.

(b) Attach dial indicator Tool C-3339 to cylinder head and set it at right angle of valve stem being measured (Fig. 17).

(c) Move valve to and from the indicator. The total dial indicator reading should not exceed .017 inch. Ream the guides for valves with oversize stems if dial indicator reading is excessive or if the stems are scuffed or scored.

(d) Service valve with oversize stems are available in .005, .015 and .030 inch oversize. Reamers to accommodate the oversize valve stem are as follows: Reamer Tool C-3433 (.379 to .380 inch) Reamer Tool C-3430 (.389 to .390 inch) Reamer Tool C-3427 (.404 to .405 inch).

(e) Slowly turn reamer by hand and clean guide thoroughly before installing new valve. **Do not attempt to ream the valve guides from standard directly to .030 inch. Use step procedure of .005, .015 and .030 inch so the valve guides may be reamed true in relation to the valve seat.**

### Refacing Valves and Valve Seats

(1) The intake and exhaust valve seats and valve faces have a 45 degree angle except the 273 cubic inch exhaust valve face which has a 43 degree angle. The valve face and valve seat angles are shown in Figures 18 and 19.

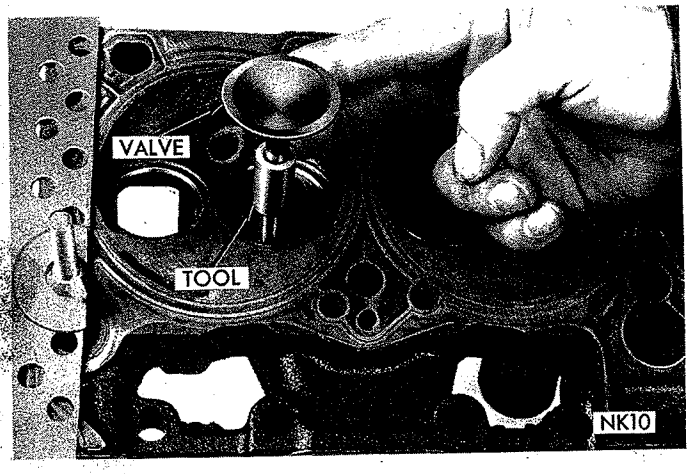


*Fig. 16—Installing Valve and Tool C-3973 (Typical)*

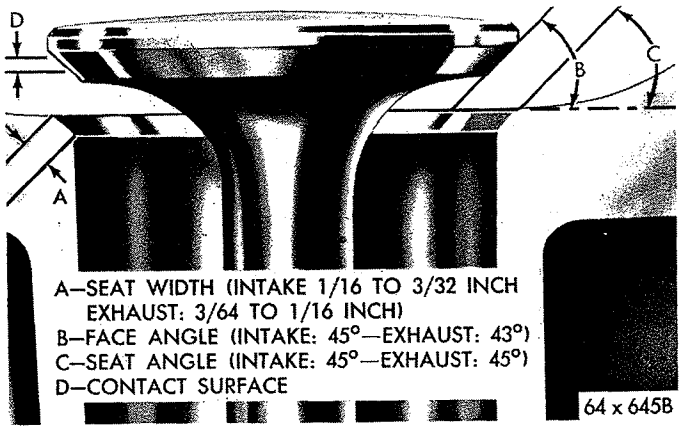


*Fig. 18—273 Cubic Inch Valve Face and Seat Angles*

MyMopar.com

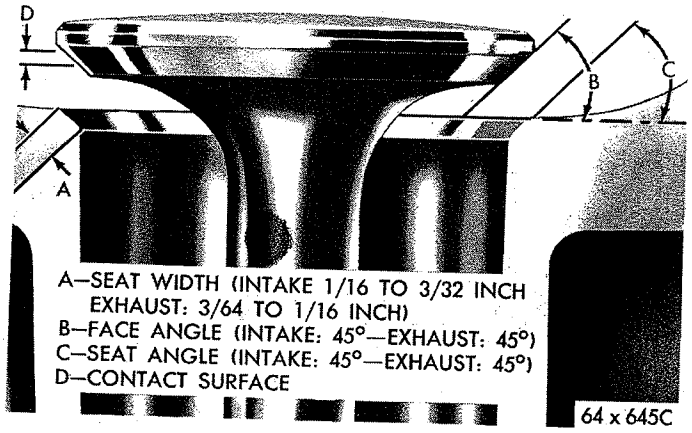


*Fig. 19—318 Cubic Inch Valve Face and Seat Angles*

(2) Inspect the remaining margin after the valves are refaced (Fig. 20). Valves with less than 3/64 inch margin should be discarded.

(3) When refacing valve seats, it is important that the correct size valve guide pilot be used for reseating stones. A true and complete surface must be obtained.

(4) Measure the concentricity of valve seat using dial indicator No. 13725. Total runout should not exceed .002 inch (total indicator reading).

(5) Check the valve seat with Prussian blue to determine where the valve contacts the seat. To do this, coat valve seat lightly with Prussian blue then set valve in place. Rotate the valve with light pressure. If the blue is transferred to the center of valve face, contact is satisfactory. If the blue is transferred to top edge of valve face, lower valve seat with a 30° stone. If the blue is transferred to bottom edge of valve face raise valve seat with a 60° stone.

(6) When seat is properly positioned the width of intake seats should be 1/16 to 3/32 inch. The width of the exhaust seats should be 3/64 to 1/16 inch.

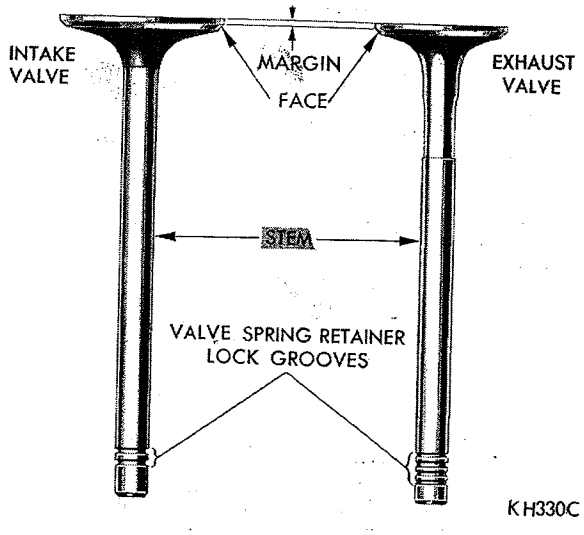


*Fig. 20—Intake and Exhaust Valves*

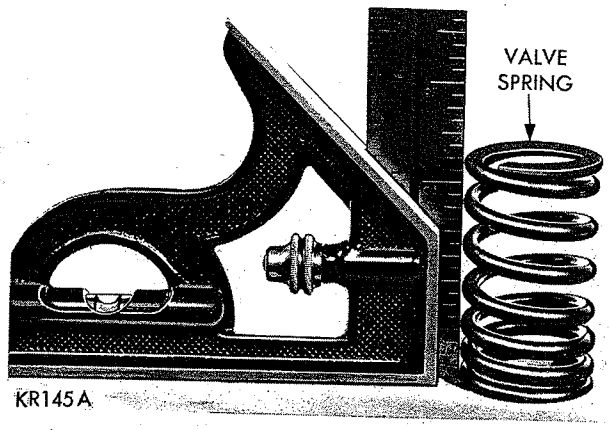


*Fig. 21—Checking Valve Spring Squareness*

### Testing Valve Springs

(1) Whenever valves have been removed for inspection, reconditioning or replacement, valve springs should be tested. As an example the compression length of the spring to be tested is 1-5/16 inches. Turn table of Tool C-647 until surface is in line with the 1-5/16 inch mark on the threaded stud and the zero mark to the front. Place spring over stud on the table and lift compressing lever to set tone device. Pull on torque wrench until ping is heard. Take reading on torque wrench at this instant. Multiply this reading by two. This will give the spring load at test length. Fractional measurements are indicated on the table for finer adjustments. Valve springs should test 137 to 150 pounds when compressed to 1-5/16 inches and 49 to 57 pounds when compressed to 1-11/16 inches. Discard springs that do not meet these specifications. For 273H see specifications.

(2) Inspect each valve spring for squareness with a steel square and surface plate, test springs from both ends (Fig. 21).

If the spring is more than 1/16 inch out of square, install a new spring.

### Installation

(1) Coat valve stems with lubrication oil and insert

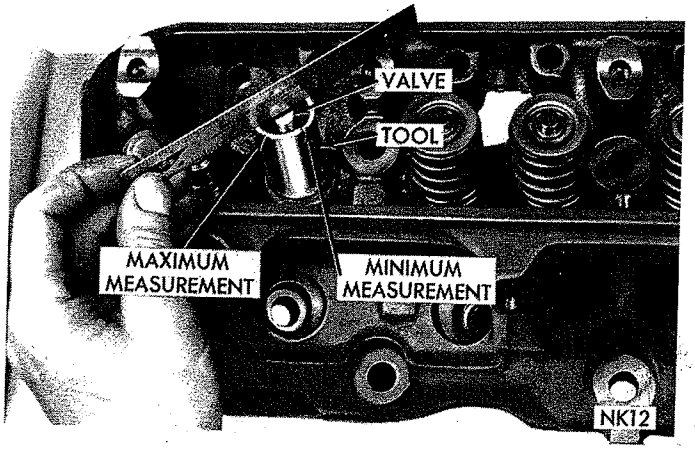


*Fig. 22—Measuring Valve Stem Length (Typical)*

MyMopar.com

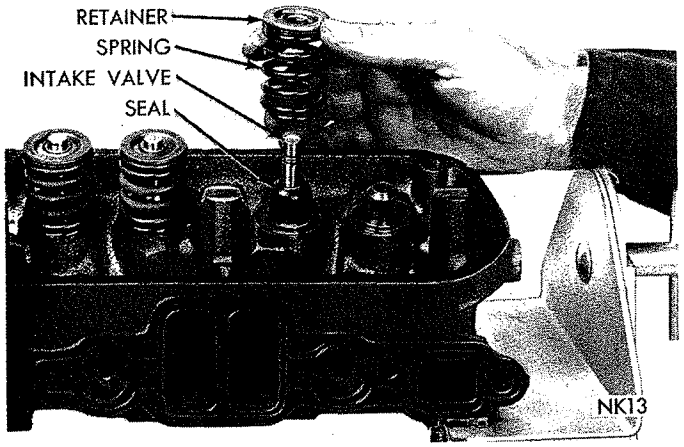


*Fig. 23—Installing Valves, Cup Seals, Spring and Retainer*

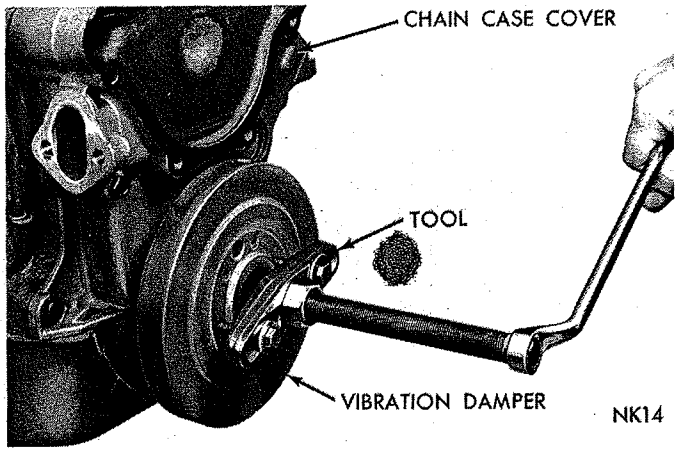


*Fig. 24—Removing Vibration Damper Assembly*

them in cylinder head.

(2) If valves or seats are reground, check valve stem height with Tool C-3968 for 273 Cubic Inch Engine and gauge Tool C-3927 for 318 Cubic Inch Engine (Fig. 22). If valve is too long, grind off the tip until length is within limits.

(3) Install new cup seals on all valve stems and over valve guides (Fig. 23). Install valve springs and retainers. Install springs so that closed coils are against cylinder head.

(4) Compress valve springs with Tool C-3422A, install locks and release tool. If valves and/or seats are reground, measure the installed height of springs. Make sure measurement is taken from bottom of spring seat in cylinder head to the bottom surface of spring retainer (if spacers are installed, measure from the top of spacer). If height is greater than 1-11/16 inches, install a 1/16 inch spacer in head counterbore to bring spring height back to normal 1⅝ inches to 1-11/16 inches.

## VALVE TIMING

(1) Rotate crankshaft until #6 exhaust valve is closing and #6 intake valve is opening. Install dial indicator so that indicator pointer contacts valve spring retainer on #1 intake valve parallel to the axis of valve stem.

(Second valve on the left bank.)

(2) Turn# 1 intake adjusting screw in one complete turn to remove lash. Adjust dial indicator to zero. Rotate crankshaft clockwise (normal running direction) until valve has lifted .028 inch for 273 cubic inch engine or .041 inches for 318 cubic inch engine.

**CAUTION: Do not turn crankshaft any further clockwise as valve spring might bottom and result in serious damage.**

The timing of the crankshaft pulley should now read from 10 degrees before top dead center to 2 degrees after top dead center. Readjust lash.

(3) If reading is not within specified limits:

(a) Check sprocket index marks.
(b) Inspect timing chain for wear.
(c) Check accuracy of DC mark on timing indicator.

## TIMING SPROCKETS AND CHAIN

### *Removal*

(1) Drain cooling system and remove radiator, fan belt and water pump assembly.

(2) Remove pulley from vibration damper and bolt and washer securing vibration damper on crankshaft.

(3) Install Tool C-3688 and pull vibration damper from end of crankshaft (Fig. 24).

(4) Remove fuel lines and fuel pump.

(5) Loosen oil pan bolts and remove the front bolt at each side.

(6) Remove chain case cover and gasket using extreme caution to avoid damaging oil pan gasket.

**It is normal to find particles of neoprene collect between the crankshaft seal retainer and crankshaft oil slinger.**

(7) Slide crankshaft oil slinger from end of crankshaft.

### *Testing Timing Chain for Stretch*

(a) Place a scale next to timing chain so that any movement of chain may be measured.

(b) Place a torque wrench and socket over camshaft sprocket attaching bolt and apply torque in direction of crankshaft rotation to take up slack; 30 foot-pounds (with cylinder head installed) or 15 foot-pounds (cylinder heads removed).

(c) Holding a scale with dimensional reading even with edge of a chain link, apply torque in the reverse direction 30 foot-pounds (with cylinder heads installed) or 15 foot-pounds (cylinder heads removed) and note amount of chain movement (Fig. 25).

(d) Install a new timing chain, if its movement exceeds 3/16 inch. **With a torque applied to the camshaft sprocket bolt, crankshaft should not be permitted to move. It may be necessary to block the crankshaft to prevent rotation.**

MyMopar.com

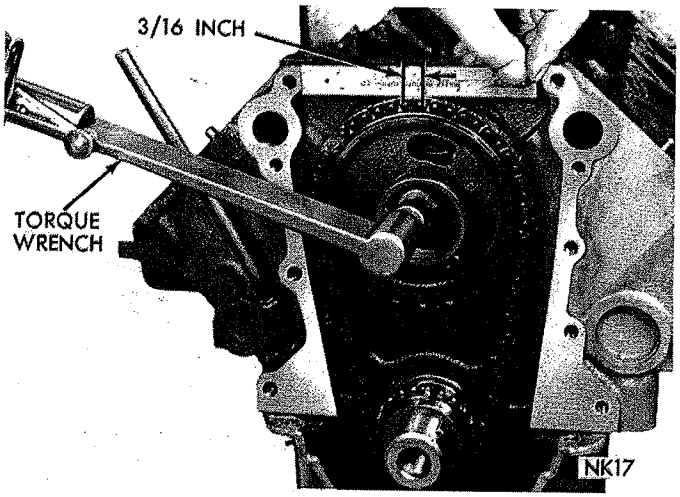


Fig. 25—Measuring Timing Chain Stretch

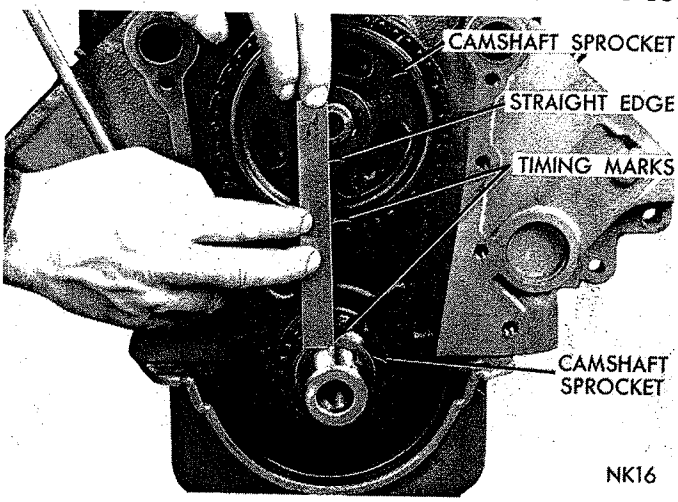


Fig. 27—Alignment of Timing Marks

(8) Remove camshaft sprocket attaching bolt cup washer and fuel pump eccentric.

(9) Remove timing chain with crankshaft and camshaft sprockets.

### Installation

When installing timing chain, use Tool C-3509 to prevent camshaft from contacting the welch plug in the rear of engine block. Remove distributor and oil pump-distributor drive gear. Locate tool against rear side of cam gear and attach tool with distributor retainer plate bolt (Fig. 26).

(1) Place both camshaft sprocket and crankshaft sprocket on the bench with timing marks on exact imaginary center line through both camshaft and crankshaft bores.

(2) Place timing chain around both sprockets.

(3) Turn crankshaft and camshaft to line up with keyway location in crankshaft sprocket and in camshaft sprocket.

(4) Lift sprockets and chain (keep sprockets tight against the chain in position as described).

(5) Slide both sprockets evenly over their respective shafts and use a straight edge to check alignment of timing marks (Fig. 27).

(6) Install the fuel pump eccentric, cup washer, and camshaft bolt. Tighten bolt to 35 foot-pounds.

(7) Check camshaft for .002 to .006 inch end play with a new thrust plate and up to .010 inch end play with a used thrust plate. If not within these limits install a new thrust plate.

(8) If chain is satisfactory, slide the crankshaft oil slinger over shaft and up against sprocket (flange away from sprocket).

(9) Be sure mating surfaces of chain case cover and cylinder block are clean and free from burrs.

(10) Using a new gasket carefully install chain case cover to avoid damaging oil pan gasket. Tighten chain case cover capscrews to 30 foot-pounds first then tighten oil pan capscrews to 15 foot-pounds.

(11) Position damper hub slot on key in crankshaft, and slide hub on crankshaft.

(12) Place installing tool, part of Puller set Tool C-3688 in position and press damper hub on crankshaft (Fig. 28).

(13) Slide pulley over the shaft and attach with bolts and lockwashers. Tighten the bolts to 15 foot-

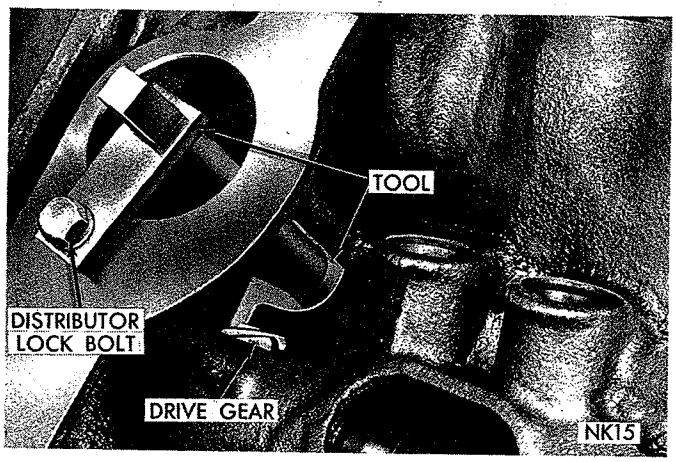


Fig. 26—Camshaft Holding Tool

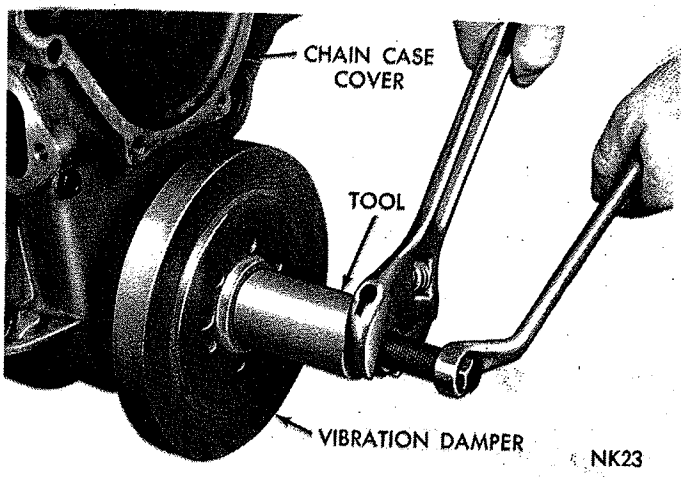


Fig. 28—Installing Vibration Damper Assembly

MyMopar.com

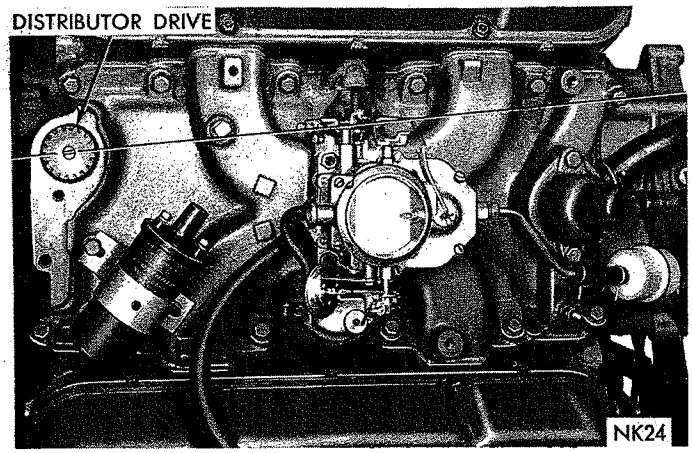


*Fig. 29—Position of Distributor Drive Shaft*

pounds.

(14) Install damper hub retainer washer and bolt.

(15) Install fuel pump and fuel lines.

(16) Install water pump and housing assembly using new gaskets. Tighten bolts to 30 foot-pounds.

(17) Install radiator, fan and belt, hoses and close drains.

(18) Fill cooling system.

(19) With timing indicator on "O" install distributor drive gear with slot pointing to the first intake manifold bolt on left side of engine (Fig. 29).

## TIMING CHAIN COVER OIL SEAL REPLACEMENT

### Removal

(1) Position remover screw of Tool C-3506 through case cover with inside of case cover up. Position puller blocks directly opposite each other, and force the angular lip between the neoprene and flange of the seal retainer.

(2) Place washer and nut on remover screw. Tighten nut as tight as possible by hand, forcing the blocks into the gap to a point of distorting the seal retainer lip, (Fig. 30). This is important, **remover is only positioned at this point.**

(3) Place sleeve over the retainer and place removing and installing plate into sleeve.

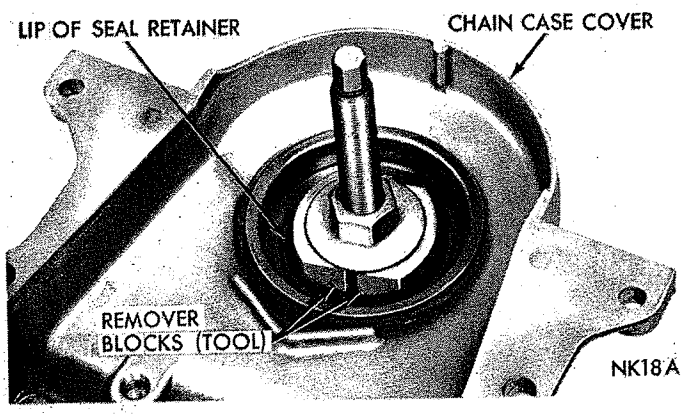


*Fig. 30—Remover Blocks Expanded to Puller Position (Tool C-3506)*

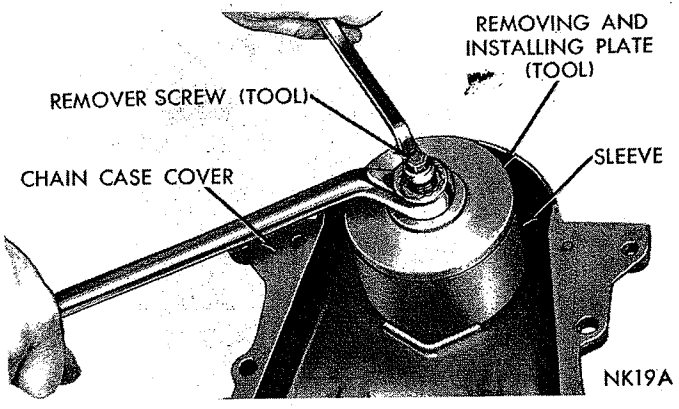


*Fig. 31—Removing Oil Seal (Tool C-3506)*

(4) Place flat washer and nut on remover screw. Hold tool center screw and tighten tool lock nut to remove seal, (Fig. 31).

### Installation

(1) Insert remover screw through removing and installing plate so that the thin shoulder will be facing up.

(2) Insert remover screw with plate through the seal opening (inside of chain case cover facing up).

(3) Place seal in the cover opening, with neoprene down. Place the seal installing plate into the new seal, with protective recess toward lip of seal retainer (Fig. 32).

(4) Install flat washer and nut on remover screw, hold screw and tighten the nut (Fig. 33).

(5) Seal is properly installed when neoprene is tight against face of cover. Try to insert a .0015 feeler gauge between neoprene and cover (Fig. 34). If the seal is installed properly, the feeler gauge cannot be inserted.

## CAMSHAFT REMOVAL (Engine Removed from Vehicle)

The camshaft has an integral oil pump and distributor drive gear and a bolt on fuel pump eccentric, as shown in (Fig. 35). With engine in repair stand C-3167

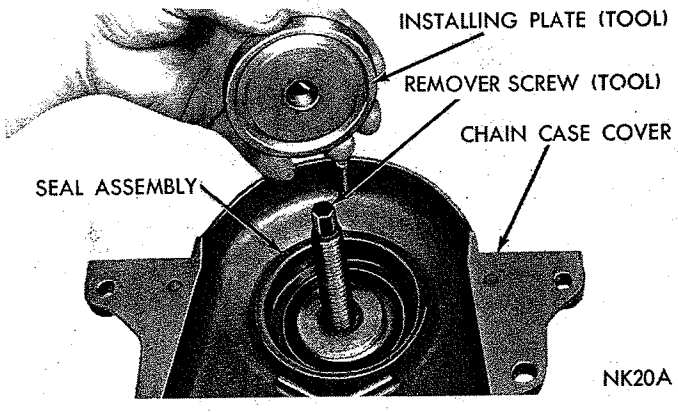


*Fig. 32—Positioning Installer Plate on a New Seal (Tool C-3506)*

MyMopar.com

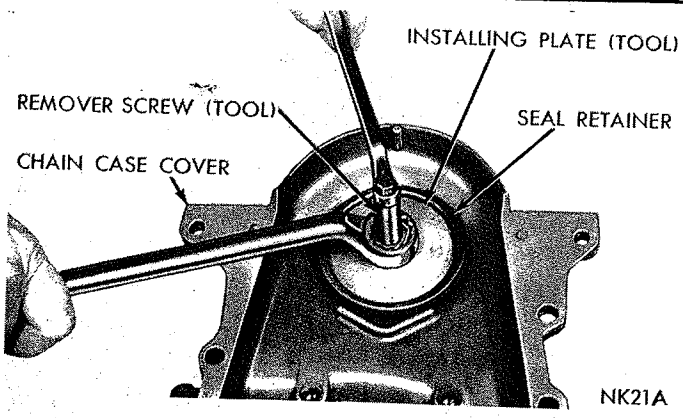


*Fig. 33—Installing a New Seal (Tool C-3506)*

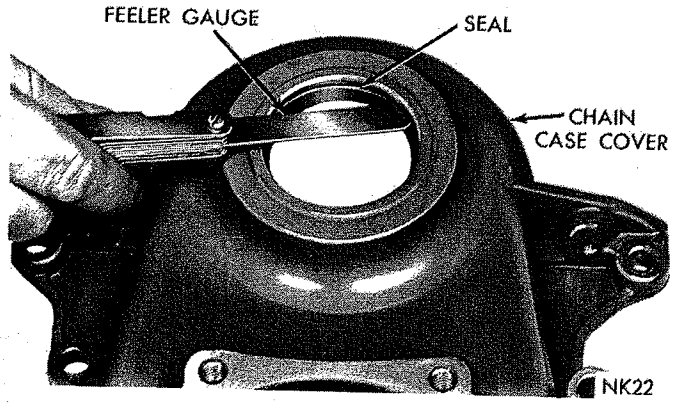


*Fig. 34—Checking Seal for Proper Seating*

and adapter C-3662 and intake manifold, cylinder head covers and timing chain removed.

(1) Remove rocker arm and shaft assemblies.

(2) Remove push rods and tappets and place them in their respective places in tool C-3068 since each part should be replaced in its original location.

(3) Remove distributor and lift out the oil pump and distributor drive shaft.

(4) Remove camshaft thrust plate and carefully withdraw the camshaft being careful not to damage cam bearings with the cam lobes.

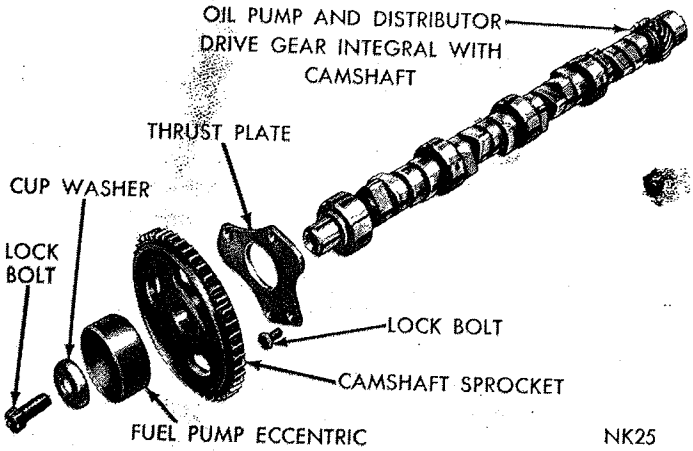


*Fig. 35—Camshaft and Sprocket Assembly (Exploded View)*

## CAMSHAFT INSTALLATION

(1) Lubricate camshaft lobes and camshaft bearing journals and insert the camshaft to within 2 inches of its final position in cylinder block.

(2) Install Tool C-3509 with tongue back of distributor drive gear, (Fig. 26).

(3) Hold tool in position with distributor lock plate screw. This tool will restrict camshaft from being pushed in too far and prevent knocking out the welch plug in rear of cylinder block. **Tool should remain installed until the camshaft and crankshaft sprockets and timing chain have been installed.**

**Whenever an engine has been rebuilt and a new camshaft and/or new tappets have been installed, one quart of factory recommended oil additive should be added to the engine oil to aid in breaking. The oil mixture should be left in the engine for a minimum of 500 miles. Drain the oil mixture at the next normal oil change.**

**Whenever the camshaft is replaced, all of the tappet faces must be inspected for crown with a straightedge. If any negative (crown dish) is observed, tappet must be replaced.**

## CAMSHAFT BEARINGS (Engine Removed from Vehicle)

### *Removal*

(1) With engine completely disassembled, drive out rear cam bearing welch plug.

(2) Install proper size adapters and horse shoe washers (part of Tool C-3132A) at back of each bearing shell to be removed and drive out bearing shells, (Fig. 36).

### *Installation*

(1) Install new camshaft bearings with Tool C-3132A by sliding the new camshaft bearing shell over proper adapter.

(2) Position rear bearing in the tool. Install horse shoe lock and by reversing removal procedure, carefully drive bearing shell into place.

(3) Install remaining bearings in the same manner. Bearings must be carefully aligned to bring oil

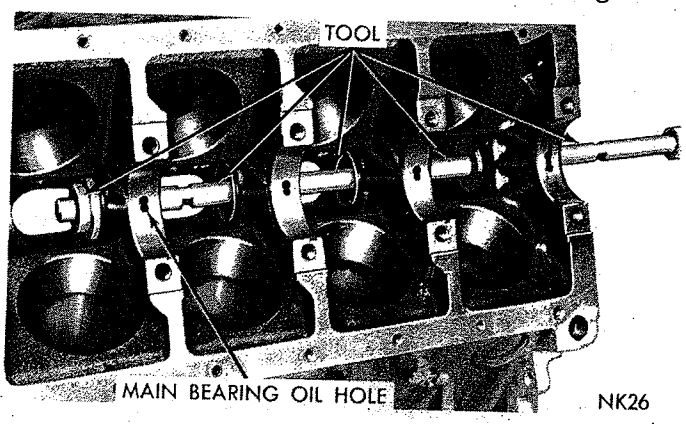


*Fig. 36—Removing Camshaft Bearings*

MyMopar.com

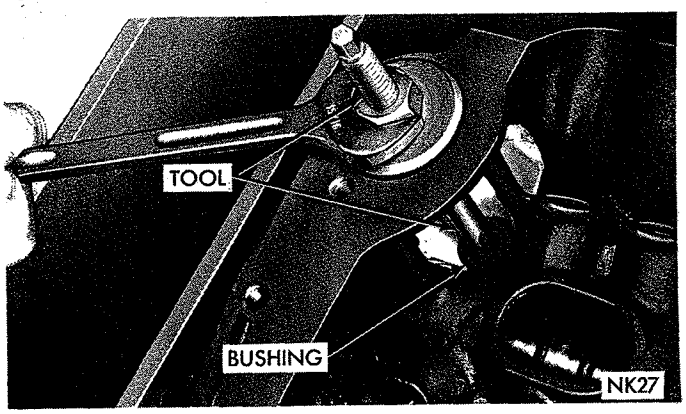


*Fig. 37—Removing Distributor Drive Shaft Bushing*

holes into full register with oil passages from the main bearings. Also, Number two bearing must index with the oil passage to the left cylinder head and Number four bearing must index with the oil passage to the right cylinder head. If the camshaft bearing shell oil holes are not in exact alignment, remove and reinstall them correctly. Use Tool C-897 to install a new core hole plug at the rear of camshaft. **Be sure this plug does not leak.**

## DISTRIBUTOR DRIVE SHAFT BUSHINGS

### *Removal*

(1) Insert Tool C-3052 into old bushing and thread down until a tight fit is obtained, (Fig. 37).

(2) Hold puller screw and tighten puller nut until bushing is removed.

### *Installation*

(1) Slide new bushing over burnishing end of Tool C-3053 and insert the tool and bushing into the bore, as shown in (Fig. 38).

(2) Drive bushing and tool into position, using a soft hammer.

(3) As the burnisher is pulled through the bushing by tightening the puller nut, the bushing is expanded tight in block and burnished to correct size, (Fig. 39). **DO NOT REAM THIS BUSHING.**

### *Distributor Timing*

Before installing the distributor and oil pump drive shaft, time engine as follows:

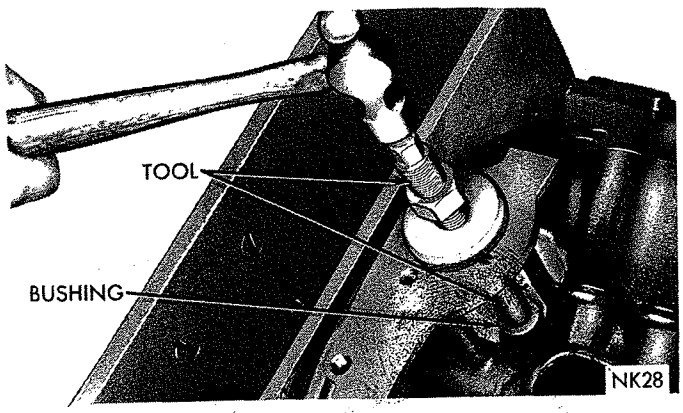


*Fig. 38—Installing Distributor Drive Shaft Bushing*

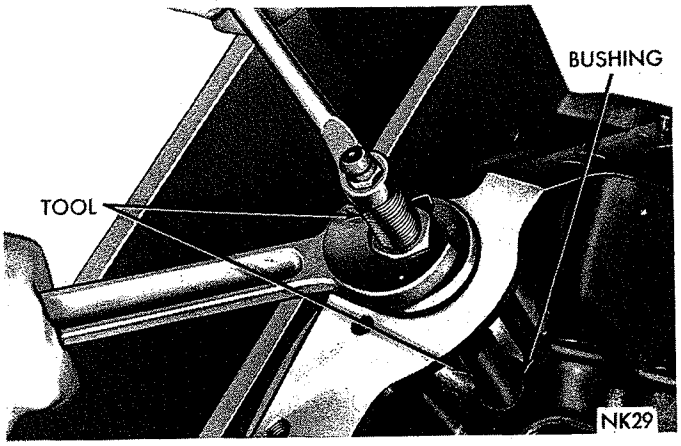


*Fig. 39—Burnishing Distributor Drive Shaft Bushing*

(1) Rotate crankshaft until No. 1 cylinder is at top dead center on the firing stroke.

(2) When in this position, the straight line on vibration damper should be under ("O") on the timing indicator.

(3) Coat shaft and drive gear with engine oil. Install the shaft so that after gear spirals into place, it will index with the oil pump shaft, so slot in top of drive gear will point to the first intake manifold bolt on left side of engine as shown in (Fig. 29).

### *Installation of Distributor*

(1) Hold the distributor over the mounting pad on cylinder block with vacuum chamber pointing toward right of engine.

(2) Turn rotor until it points forward and to approximate location of No. 1 tower terminal in distributor cap.

(3) Place distributor gasket in position.

(4) Lower the distributor and engage the shaft in the slot of distributor drive shaft gear.

(5) Turn distributor clockwise until breaker contacts are just separating and install hold down clamp.

## CYLINDER BLOCK

### *Cleaning and Inspection*

(1) Clean cylinder block thoroughly and check all core hole plugs for evidence of leaking.

(2) If new core hole plugs are installed coat edges of plug and core hole with a suitable sealer and drive plugs in place with driver, Tool C-897.

(3) Examine block for cracks or fractures.

(4) Remove top ridge of cylinder bores with a reliable ridge reamer before removing pistons from cylinder block. Be sure to keep tops of pistons covered during this operation. Pistons and connecting rods must be removed from the top of cylinder block. When removing piston and connecting rod assemblies from the engine, rotate crankshaft so that each connecting rod is centered in cylinder bore.

MyMopar.com

(5) Remove connecting rod cap.

(6) Install Tool C-3221 on one connecting rod bolt and protector over the other bolt and push each piston and rod assembly out of cylinder bore.

(7) After removal, install bearing cap on the mating rod.

### Cylinder Bore Inspection

The cylinder walls should be checked for out-of-round and taper with Tool C-119. If the cylinder bores show more than .005" out-of-round, or a taper of more than .010", or if the cylinder walls are badly scuffed or scored, the cylinder block should be rebored and honed, and new pistons and rings fitted. Whatever type of boring equipment is used, boring and honing operation should be closely coordinated with the fitting of pistons and rings in order that specified clearances may be maintained.

### Honing Cylinder Bores

Before honing, stuff plenty of clean rags under the bores, over the crankshaft to keep abrasive materials from entering crankcase area.

(1) Used carefully, the cylinder bore resizing hone C-823 equipped with 220 grit stones, is the best tool for this job. In addition to deglazing, it will reduce taper and out-of-round as well as removing light scuffing, scoring or scratches. Usually a few strokes will clean up a bore and maintain the required limits.

(2) Deglazing of the cylinder walls may be done using a cylinder surfacing hone, Tool C-3501, equipped with 280 grit stones (C-3501-3910) if the cylinder bore is straight and round. 20-60 strokes depending on the bore condition will be sufficient to provide a satisfactory surface. Inspect cylinder walls after each 20 strokes. Use honing oil C-3501-3880 or a light honing oil available from major oil distributors. Do not use engine or transmission oil, mineral spirits or kerosene.

(3) Honing should be done by moving the hone up and down fast enough to get a cross-hatch pattern. When hone marks **intersect** at 60°, the cross hatch angle is most satisfactory for proper seating of rings (Fig. 40).

(4) After honing, it is necessary that the block be cleaned again to remove all traces of abrasives.

**CAUTION: Be sure all abrasives are removed from engine parts after honing. It is recommended that a solution of soap and water be used with a brush and the parts then thoroughly dried. The bore can be considered clean when it can be wiped clean with a white cloth and cloth remains clean. Oil the bores after cleaning to prevent rusting.**

## PISTONS, PINS AND RINGS

The pistons are cam ground so that the diameter at the pin boss is less than its diameter across the thrust face. This allows for expansion under normal operating conditions. Under operating temperatures, expansion forces the pin bosses away from each other, thus, causing the piston to assume a more nearly round shape. It is important that pistons be checked for taper and elliptical shape before they are fitted into the cylinder bore (Fig. 41).

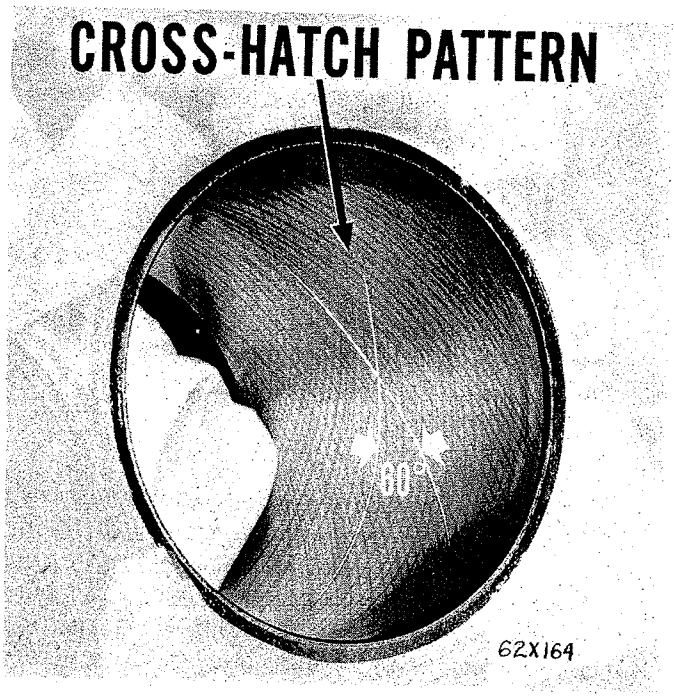


*Fig. 40—Cross Hatch Pattern*

### Finished Pistons

All pistons are machined to the same weight in grams, regardless of oversize to maintain piston balance. For cylinder bores which have been honed or rebored, pistons are available in standard and the following oversizes: .005, .020, .040 inch.

### Piston Fitting

Piston fitting should be done at normal room tem-

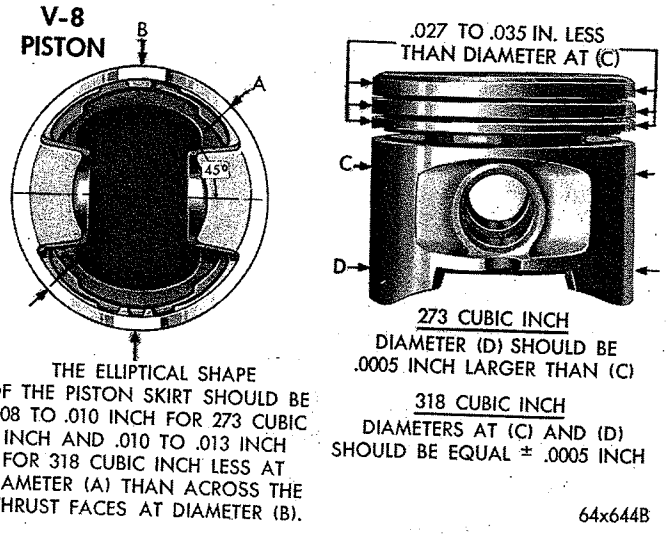


*Fig. 41—Piston Measurements*

MyMopar.com

perature, 70°F. Use a spring scale and a strip of ½ inch wide feeler stock .0015 inch thickness. The feeler stock should be long enough to extend into the cylinder bore to the full length of piston travel. **Cylinder bore and piston must be clean.**

(1) Coat cylinder bore lightly with SAE 10W engine oil. Insert the piston in the bore upside down with feeler stock between thrust face of piston and cylinder wall.

(2) Hold the piston and draw the feeler stock straight out, with spring scale Tool C-690.

(3) The amount of pull required should be from 5 to 10 pounds (Fig. 42).

### Piston Pins

(1) With new piston and new pins at room temperature, 70°F., pin should be a light thumb push fit in the piston and connecting rod. Replacement is necessary if there is excessive clearance between the pin and the piston. Ream piston and connecting rod to next oversize. New pistons are supplied with properly fitted pins.

(2) Assemble pistons and rods for the left hand cylinder bank (1-3-5-7) with piston boss marked "Front" and indent on piston head on the same side as the larger chamfer on large end of connecting rod. Assemble pistons and rods to be used in the right cylinder bank (2-4-6-8) with "Front" and indent opposite the large chamfer in the connecting rod.

### Fitting Rings

(1) Measure piston ring gap about two inches from bottom of cylinder bore in which it is to be fitted (An inverted piston can be used to push the rings down to insure positioning rings squarely in the cylinder wall before measuring).

(2) Insert feeler stock in the gap. The ring gap should be between .010 to .020 inch for compression

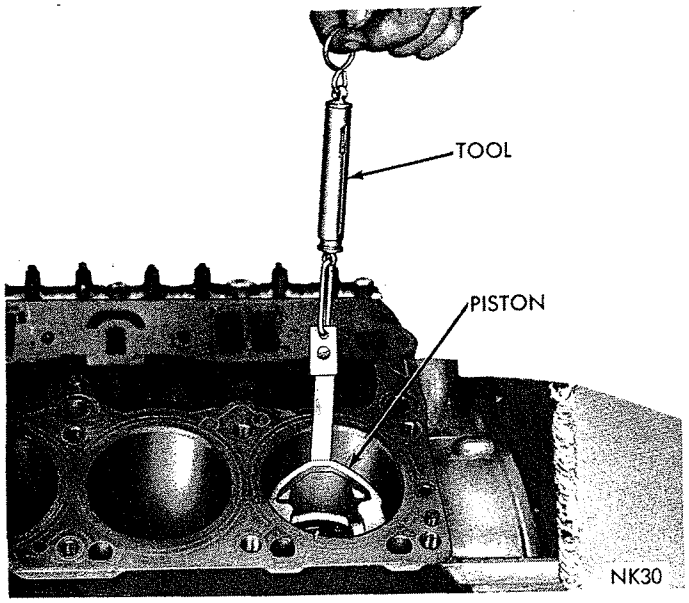


*Fig. 42—Fitting Piston in Cylinder Bore*

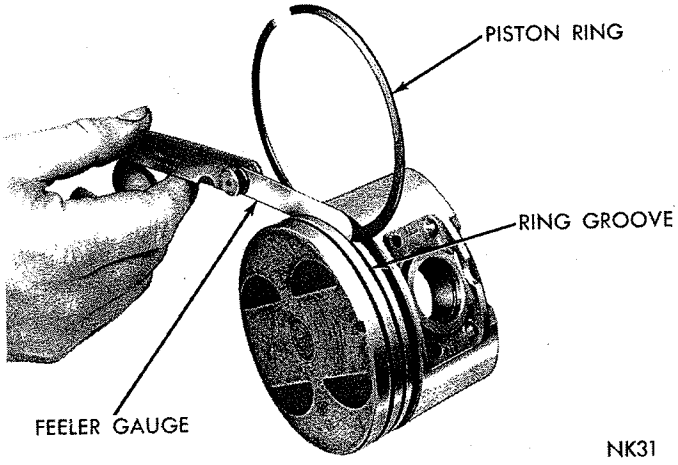


*Fig. 43—Measuring Piston Ring Clearance*

rings and .015 to .062 inch for oil ring steel rails in standard size bores (for new service rings). Maximum gap in .005 inch O/S bores should be .060 inch for compression rings and .070 inch for oil ring steel rails.

(3) Measure side clearance between piston ring and ring land (Fig. 43). Clearance should be .0015 to .003 inch for the top compression ring and the intermediate ring. Steel rail service oil ring should be free in groove, but should not exceed .005 inch side clearance.

(4) Install the oil ring in lower ring groove using instructions in service ring package.

(5) Install compression rings in middle and top grooves use ring installer Tool C-263 for 273 cubic inch engine, Tool C-3586 for 318 cubic inch engine. Be sure the mark "Top" on each compression ring is to the top of piston when ring is installed.

## CONNECTING ROD—IDENTIFICATION

A Maltese Cross stamped on the engine numbering pad indicates that the engine is equipped with a crankshaft which has one or more connecting rod or main bearing journals finished .001 inch undersize. A Maltese Cross with a X following engine serial num-

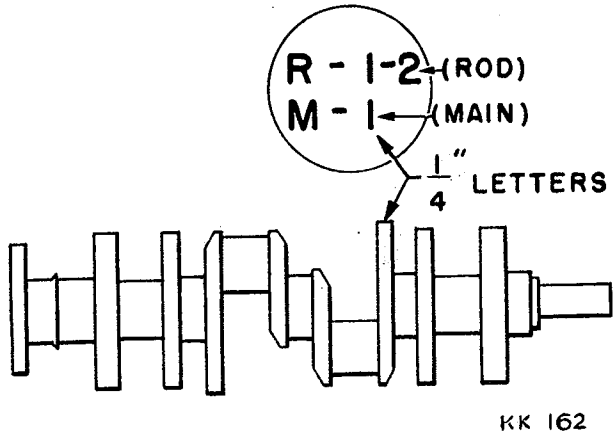


*Fig. 44—Showing Location of Internal Marking of No. 3 Counterweight*

MyMopar.com

ber indicates that all main journals and/or all rod journals are .010 inch undersize. The position of the undersize journal or journals will be stamped on machined surface of the No. 3 counterweight (Fig. 44).

Connecting rod journals will be identified by the letter "R" and main bearing journals by the letter "M." For example "M-1" indicates that No. 1 main bearing is .001 inch undersize.

## INSTALLATION OF CONNECTING ROD BEARINGS

Fit all rods on one bank until completed. Do not alternate from one bank to another, because when the rods are assembled to pistons correctly, they are not interchangeable from one bank to another.

The bearing caps are not interchangeable and should be marked at removal to insure correct assembly.

Each bearing cap has a small "V" groove across the parting face. When installing the lower bearing shell, make certain that the "V" groove in the shell is in line with the "V" groove in the cap. This provides lubrication of the cylinder wall in the opposite bank.

The bearing shells must be installed so that the tangs are in the machined grooves in the rods and caps.

Limits of taper or out-of-round on any crankshaft journals should be held to .001 inch. Bearings are available in .001, .002, .003, .010 and .012 inch undersize. **Install the bearings in pairs. Do not use a new bearing half with an old bearing half. Do not file the rods or bearing caps.**

## MEASURING CONNECTING ROD BEARING CLEARANCE

### *Shim Stock Method*

(1) Place an oiled .001 inch brass shim stock (½ inch wide and ¾ inch long) between bearing and connecting rod journal.

(2) Install bearing cap and tighten to 45 foot-pounds.

(3) Turn connecting rod ¼ turn in each direction. A slight drag should be felt which indicates clearance is satisfactory. Correct clearance is from .0005 to .0015 inch.

(4) Side play should be from .006 to .014 inch (two rods).

## INSTALLING PISTON AND CONNECTING ROD ASSEMBLY IN CYLINDER BLOCK

(1) Before installing pistons, and connecting rod assemblies into the bore, be sure that compression ring gaps are staggered so that neither is in line with oil ring rail gap.

(2) The oil ring expander ends must butt and be positioned toward outboard side of engine and

(A) on 318 Cubic Inch Engines the oil ring rail gaps should be positioned opposite each other and in line with the piston pin.

(B) on 273 Cubic Inch Engines the oil ring rail gaps should be positioned three inches apart on the inside of the "V" as shown in Figure 45.

(3) Immerse the piston head and rings in clean engine oil, slide the ring compressor, Tool C-385, over the piston and tighten with the special wrench (part of Tool C-385).

(4) Be sure position of rings does not change during this operation. Screw the connecting rod bolt protector (part of Tool C-3221) on one rod bolt, and insert rod and piston into cylinder bore. **Rotate crankshaft so connecting rod journal is on the center of cylinder bore.**

(5) Attach puller part of Tool C-3221 on the other bolt, and guide the rod over the crankshaft journal (Fig. 46).

(6) Tap the piston down in cylinder bore, using a hammer handle. At the same time, guide connecting rod into position on crankshaft journal.

(7) The notch or groove on top of piston must be

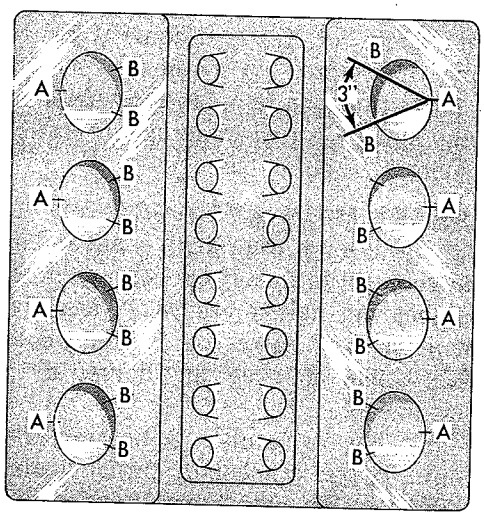


***Fig. 45—Proper Oil Ring Installation***

MyMopar.com

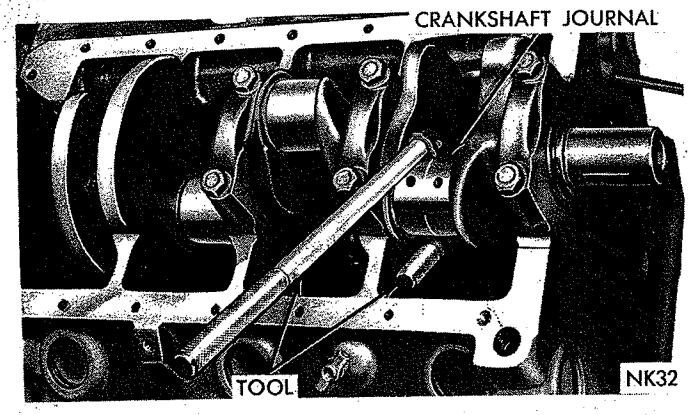


*Fig. 46—Removing or Installing Connecting Rod*

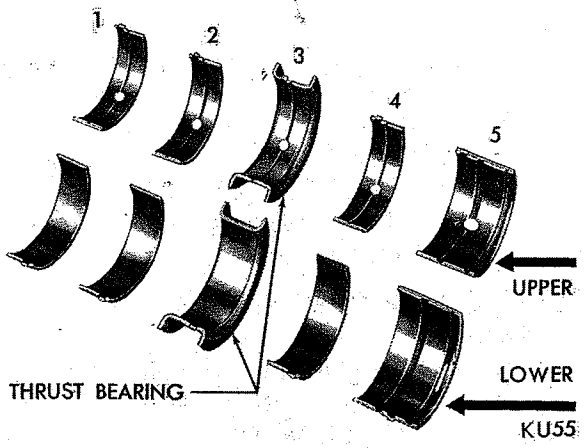


*Fig. 47—Main Bearing Identification*

pointing toward front of engine and the larger chamfer of the connecting rod bore must be installed toward crankshaft journal fillet.

(8) Install rod caps, tighten nuts to 45 foot-pounds.

## CRANKSHAFT MAIN JOURNALS

The crankshaft journals should be checked for excessive wear, taper and scoring. Limits of taper or out-of-round on any crankshaft journals should be held to .001 inch. Journal grinding should not exceed .012 inch under the standard journal diameter. Do NOT grind thrust faces of Number 3 main bearing. Do NOT nick crank pin or main bearing fillets. After regrinding, remove rough edges from crankshaft oil holes and clean out all oil passages.

## CRANKSHAFT MAIN BEARINGS

Bearing caps are not interchangeable and should be marked at removal to insure correct assembly. Upper and lower bearing halves are NOT interchangeable. Lower main bearing halves of 1, 2 and 4 are interchangeable. Upper main bearing halves of 1, 2 and 4 are interchangeable.

Upper and lower Number 3 bearing halves are flanged to carry the crankshaft thrust loads and are NOT interchangeable with any other bearing halves in the engine, (Fig. 47). Bearing shells are available in standard and the following undersizes: .001, .002, .003, .010 and .012 inch. Never install an undersize bearing shell that will reduce clearance below specifications.

### *Removal*

(1) Remove oil pan and mark bearing caps before removal.

(2) Remove bearing caps one at a time. Remove upper half of bearing by inserting Tool C-3059 (Fig. 48) into the oil hole of crankshaft.

(3) Slowly rotate crankshaft clockwise, forcing out upper half of bearing shell.

## MEASURING MAIN BEARING CLEARANCE

### *Shim Stock Method*

(1) Smooth edges of a ½ x ¾ inch piece of brass shim stock, .001 inch thickness.

(2) Lubricate main bearing journals and position shim stock across center main journal.

(3) Install bearing in center main bearing cap, bearing tang in groove in cap, lubricate bearing and seat cap in block. Tighten bolts to 85 foot-pounds.

(4) If a slight drag is felt as the crankshaft is turned (move no more than ¼ turn in either direction), clearance is .001 inch or less and is considered satisfactory.

If, however, no drag is felt, the bearing is too large or the crankshaft cannot be rotated, the bearing is too small and should be replaced with correct size.

(5) Check crankshaft end play to .002-.007 inch. If end play is less than .002 inch or more than .007 inch, install a new Number 3 main bearing.

(6) Fit the remaining bearings in same manner. Selectively fitting one main bearing at a time while all other main bearing caps are properly torqued.

It is permissible to use one .001 inch undersize bearing shell with one standard bearing shell, or one .002 inch undersize bearing shell with one .001 inch undersize shell. **Always use the smaller diameter bearing half as the upper.** Never use a new bearing half more than .001 inch smaller than the lower bearing half.

### *Installation of Upper Main Bearing*

**When installing a new upper bearing shell, slightly chamfer the sharp edges from the plain side.**

(1) Start bearing in place, and insert Tool C-3059 into the oil hole of crankshaft, (Fig. 48).

(2) Slowly rotate the crankshaft counterclockwise sliding bearing into position.

(3) After all bearings have been fitted, tighten all caps to 85 foot-pounds. The crankshaft end play should be .002 to .007 inch.

## INSTALLATION OF REAR MAIN BEARING OIL SEALS (Crankshaft Removed)

### *Upper Seal*

(1) Install a new rear bearing oil seal in the cylin-

MyMopar.com

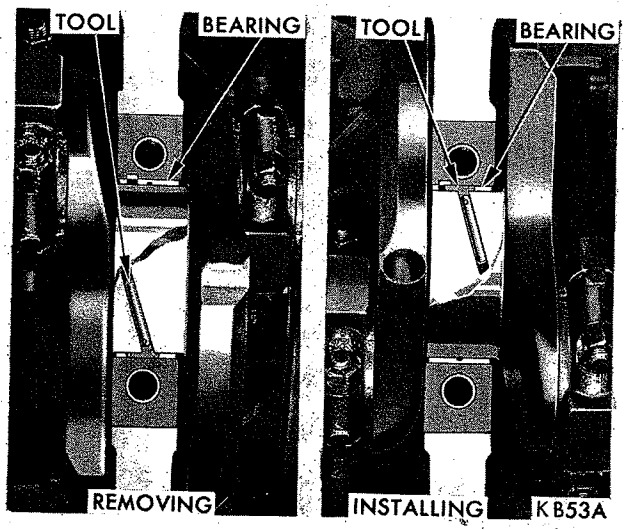


*Fig. 48—Removing or Installing Upper Main Bearing*

der block so that both ends protrude.

(2) Using Tool C-3511 tap seal down into position until tool is seated in bearing bore, (Fig. 49).

(3) Hold tool in this position and cut off the portion of seal that extends above the block on both sides,

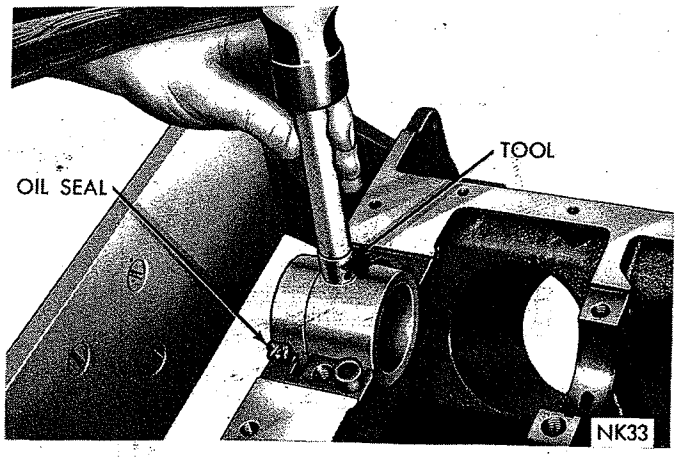


*Fig. 49—Installing Rear Main Upper Oil Seal*

(Fig. 50).

### Lower Seal

(1) Install a new seal in bearing cap so that ends protrude.

(2) Using Tool C-3511 tap the seal down into position until tool is seated in bearing bore.

(3) Hold tool in this position and cut off the portion of seal that extends above the cap on both sides.

## ENGINE OILING SYSTEM

## OIL PAN

### Removal

(1) Disconnect negative (ground) cable from the battery, and remove dipstick.

(2) Raise vehicle on a hoist, drain the oil. Remove engine to torque converter left housing brace.

(3) Remove steering and idle arm ball joints from steering linkage center link.

(4) Remove exhaust cross-over pipe from exhaust manifolds and leave it hang without disconnecting it from the muffler. On some models it will be necessary to remove cross-over pipe.

(5) Remove the oil pan bolts and oil pan.

### Installation

(1) Inspect alignment of oil strainer. Bottom of strainer must be parallel with the machined surface of the cylinder block. Bottom of strainer must touch bottom of oil pan.

(2) Install oil pan using a new gasket and seals. Install engine to converter housing brace.

(3) Connect exhaust cross-over pipe to manifolds. (If so equipped.)

(4) Connect steering and idler arm ball joints to steering center link.

(5) Lower vehicle, install dipstick, fill with proper grade and quantity of motor oil, connect battery ground.

## OIL PUMP (Refer to Figure 52)

It is necessary to remove the oil pan, and remove the oil pump from rear main bearing cap to service the oil pump.

### Disassembly

(1) Remove oil pump cover bolts and lockwashers, and lift off cover.

(2) Discard oil seal ring.

(3) Remove pump rotor and shaft, and lift out outer rotor.

(4) Remove oil pressure relief valve plug and lift

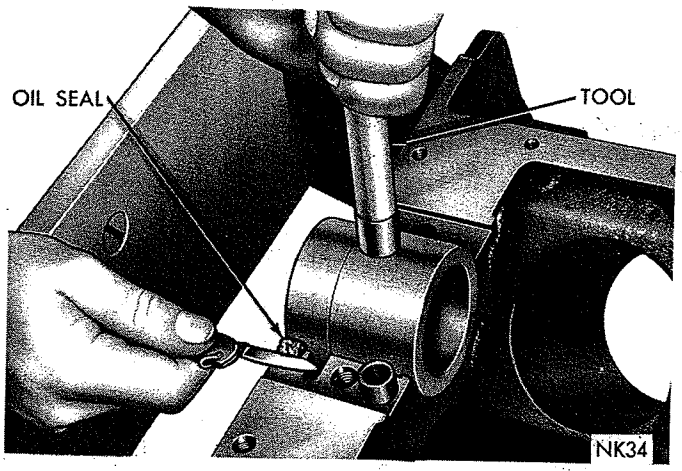


*Fig. 50—Trimming Rear Main Upper Oil Seal*

MyMopar.com

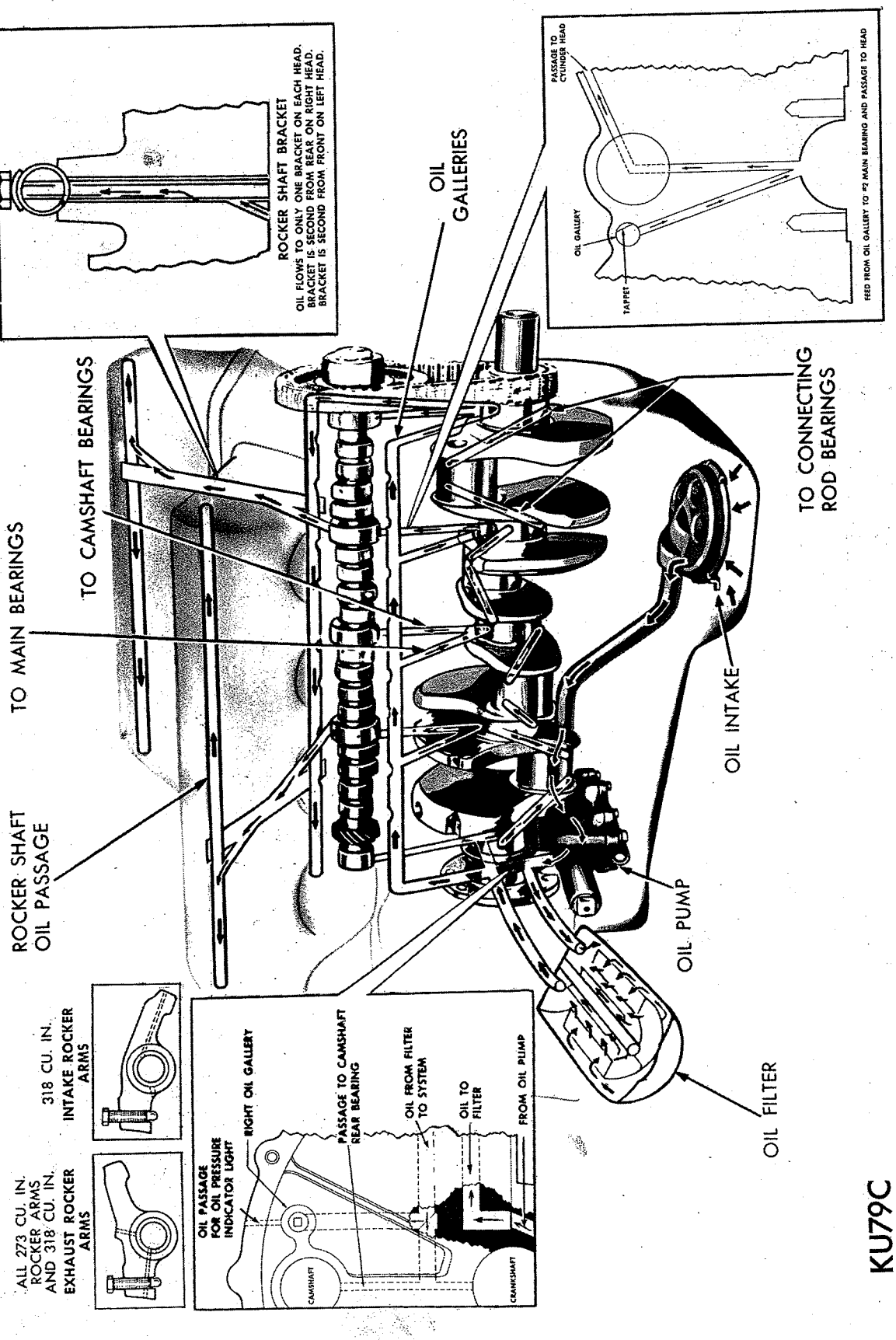


*Fig. 51—Engine Oiling System*

MyMopar.com

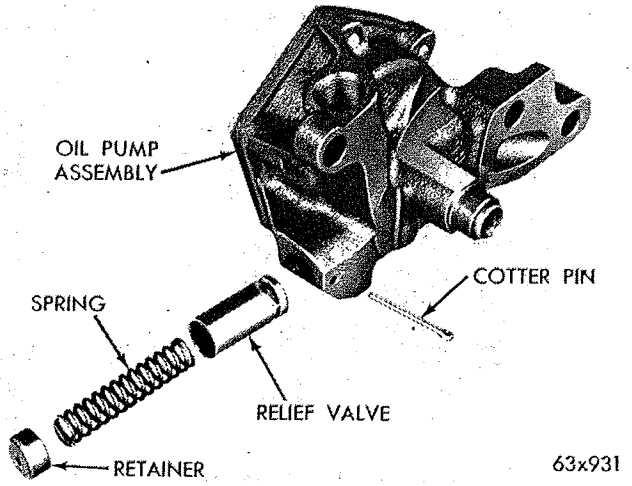


*Fig. 52—Oil Pump*

out spring and plunger.

(5) Wash all parts in a suitable solvent and inspect carefully for damage or wear. (Fig. 53).

### Inspection

(1) The mating face of the oil pump cover should be smooth. If cover is excessively scratched or grooved, it should be replaced.

(2) Check for excessive cover to rotor wear by laying a straightedge across cover surface. If a .0015 inch feeler gauge can be inserted between the cover and straightedge, discard cover and install a new one (Fig. 54).

(3) Measure diameter and thickness of outer rotor. If outer rotor measures less than .998 inch (Fig. 55) and the diameter is less than 2.244 inches, install a new outer rotor.

(4) Measure thickness of inner rotor.

(5) If inner rotor measures less than .998 inch, a new inner rotor should be installed (Fig. 56).

(6) Slide outer rotor and inner rotor into pump body and then place a straightedge across the face between the bolt holes (Fig. 57). If a feeler gauge of more than .004 inch can be inserted between the rotors and straightedge, install new rotors.

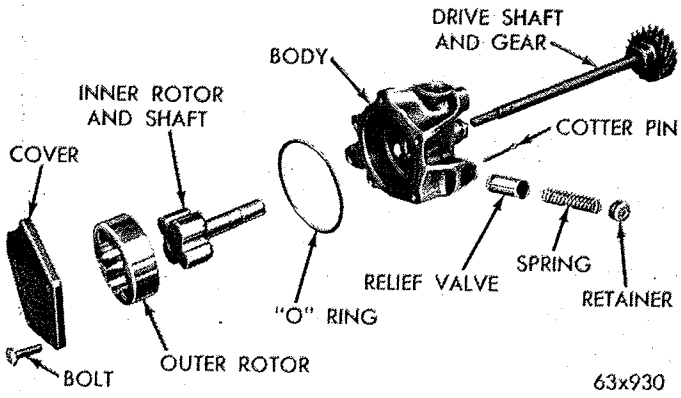


*Fig. 53—Oil Pump Assembly*

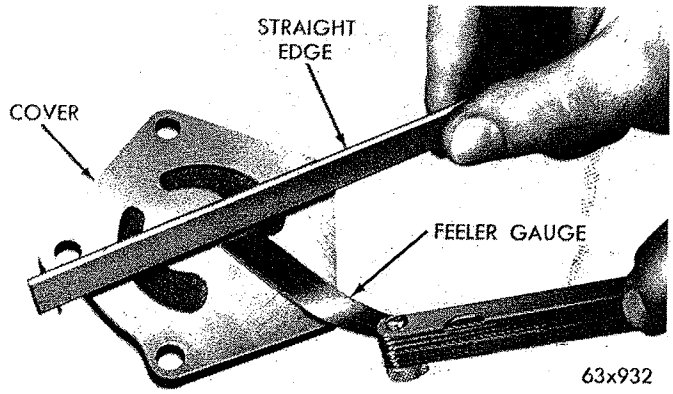


*Fig. 54—Checking Oil Pump Cover Flatness*

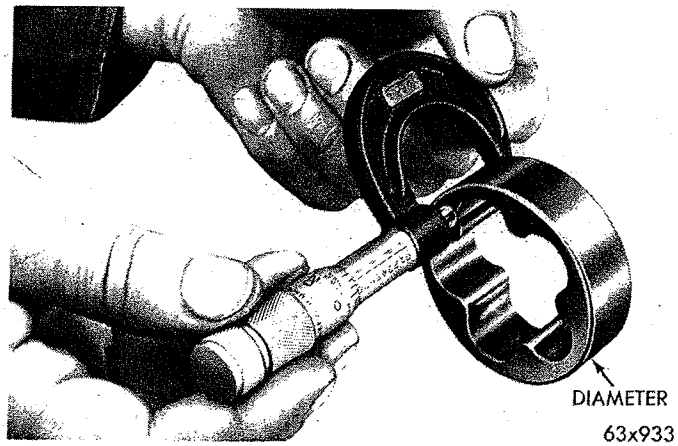


*Fig. 55—Measuring Outer Rotor Thickness*

(7) Remove inner rotor and shaft, leaving outer rotor in pump cavity. Press outer rotor to one side with fingers and measure the clearance between outer rotor and pump body (Fig. 58). If measurement is more than .012 inch, install a new oil pump body. (This check is not necessary if a new oil pump body is being used.)

(8) Check clearance between inner rotor and outer rotor (Fig. 59). If measurement is more than .006 inch, install new rotor and outer rotor.

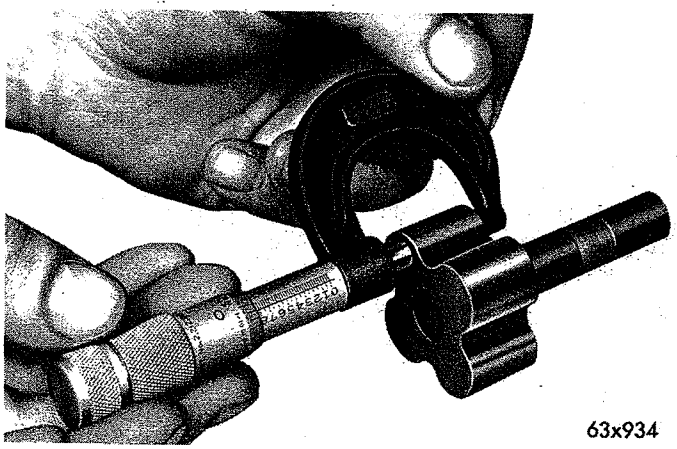


*Fig. 56—Measuring Inner Rotor Thickness*

MyMopar.com

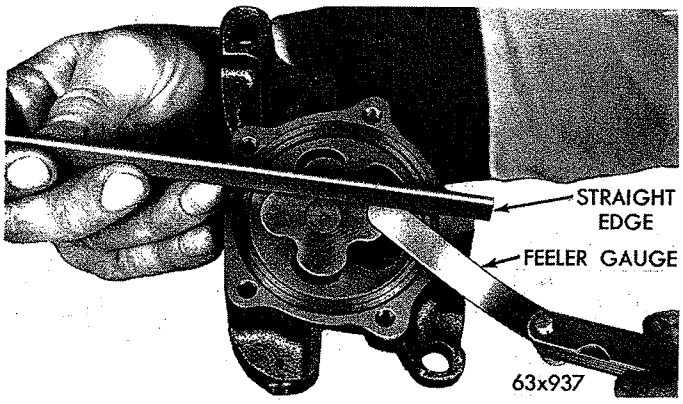


*Fig. 57—Measuring Clearance Over Rotors*

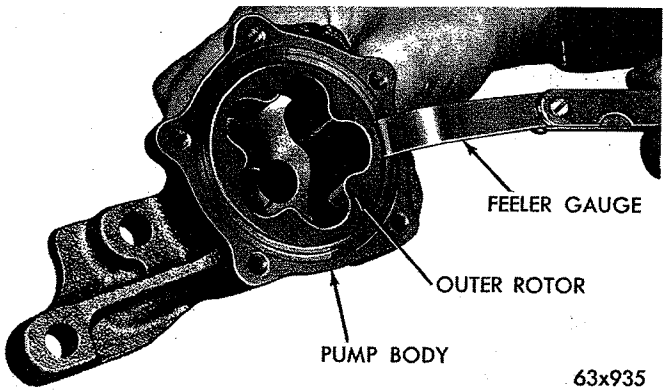


*Fig. 58—Measuring Outer Rotor Clearance*

## Assembly

(1) When assembling oil pump, be sure to use a new oil seal ring between cover and body.

(2) Tighten cover bolts to 10 foot-pounds.

(3) Prime oil pump.

(4) Install oil pump and strainer to rear main bearing cap. Tighten bolts to 35 foot-pounds.

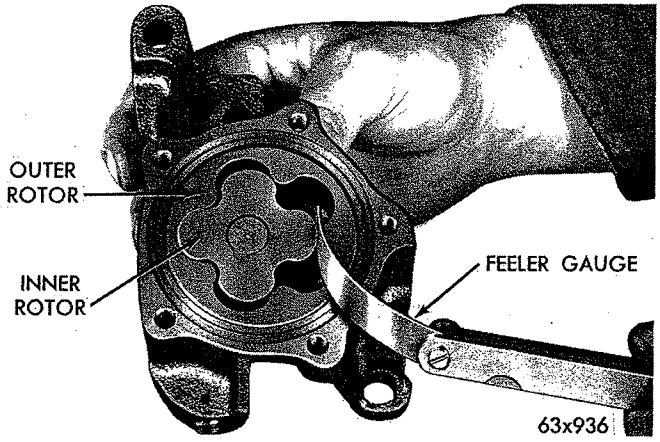


*Fig. 59—Measuring Clearance Between Rotors*

## Servicing the Oil Pressure Relief Valve

(1) To inspect oil pressure relief valve, it will be necessary to remove the oil pan.

(2) Carefully remove cotter pin as it is under spring pressure.

(3) Remove spring and plunger.

(4) Clean parts thoroughly.

(5) Inspect oil pump relief valve plunger for scoring and for free operation in its bore. Small scores may be removed with 400 grit wet or dry paper providing extreme care is used not to round off the sharp edge portion of the valve.

(6) The relief valve spring has a free length of 2-1/32 to 2-3/64 inch.

(7) If the oil pressure is low, inspect for worn bearings, or look for other causes of possible loss of oil pressure.

Using oil of recommended viscosity and engine thoroughly warmed up the oil pressure should be 50 to 70 psi at 1500 rpm in a new or reconditioned engine.

## 361-383-426 CUBIC INCH ENGINES


| | Page |
|---|---|
| Camshaft | 56 |
| Camshaft Bearings | 57 |
| Closed Crankcase Ventilation System for State of California | 68 |
| Connecting Rods | 62 |
| Crankshaft Main Bearings | 63 |
| Crankshaft Main Journals | 62 |
| Crankcase Ventilation System | 67 |
| Cylinder Block | 58 |
| Cylinder Heads | 48 |
| Distributor Drive Shaft Bushing | 58 |
| Engine Mounts | 46 |
| Engine Oiling System | 64 |
| Hydraulic Tappets | 52 |
| Installing Engine Assembly | 47 |
| Installation of Connecting Rod Bearings | 62 |
| Installing Piston and Connecting Rod Assembly in Cylinder Block | 62 |
| Measuring Connecting Rod Bearing Clearance | 62 |
| Measuring Main Bearing Clearance | 63 |
| Oil Pan | 64 |
| Oil Pump | 64 |
| Oil Filter Replacement | 66 |
| Pistons, Pins and Rings | 59 |
| Removal of Engine Assembly | 47 |
| Repair of Damaged or Worn Threads | 69 |
| Replacment of Rear Main Bearing Oil Seal | 64 |
| Rocker Arms and Shaft Assembly | 48 |
| Timing Chain Cover Oil Seal Replacement | 55 |
| Timing Sprockts and Chain | 54 |
| Tune-Up | 45 |
| Valves and Valve Springs | 50 |
| Valve Timing | 54 |


MyMopar.com

## SERVICE PROCEDURES

### TUNE-UP

(1) Test battery specific gravity, add water if necessary, clean and tighten battery connections.

(2) Test cranking voltage if below 9.6 volts and more than 130 amperes draw. See Starting Motor Cranking Voltage Electrical Section of this manual.

(3) Tighten the intake manifold bolts to 50 foot-pounds.

(4) Perform cylinder compression test. Compression should not vary more than 20 pounds for 361, 383 cubic inch engines with 9.2 to 1 compression ratio, 25 pounds for 383 and 426 cubic inch engines with 10 to 1 and 10.3 to 1 compression ratios.

(5) Clean or replace spark plugs as necessary and adjust gap to .035 inch. Tighten to 30 foot-pounds using new gaskets.

(6) Test resistance of spark plug cables. Refer to "Ignition System Secondary Circuit Inspection" Electrical Section.

(7) Inspect the breaker plate contacts, primary wire and vacuum advance operation. Replace parts as necessary. Refer to Ignition System and make necessary adjustment. Test coil output voltage, primary and secondary resistance. Test Condenser.

(8) Install the distributor, distributor cap, and spark plug cables. Reset the ignition timing with the vacuum advance line disconnected. The ignition timing should be set to compensate for altitudes and/or gasoline grades.

(9) Set carburetor idle mixture adjustment. Adjust throttle stop screw to specifications. Perform a combustion analysis.

(10) Test the fuel pump for pressure and vacuum. Refer to "Fuel System" Group 14, Specifications.

(11) Inspect the manifold heat control valve in the right exhaust manifold for proper operation and apply Manifold Heat Control Valve Solvent Number 1879318 or equivalent to the bushing and shafts.

(12) Every 6 months, remove filter element and blow out dirt gently with air hose. Direct air from inside out, and keep nozzle 2 inches away from element to avoid damaging (Fig. 3). Clean the metal housing and replace the element. Every two years install a new factory recommended MoPar filter element. Service the unit more frequently when driving under severe conditions, such as in dusty areas.

(13) Inspect crankcase ventilation system as outlined on page 67.

(14) Inspect and adjust the accessory belt drives referring to "Cooling System" Group 7 for proper adjustments.

(15) Road test vehicle as a final check.

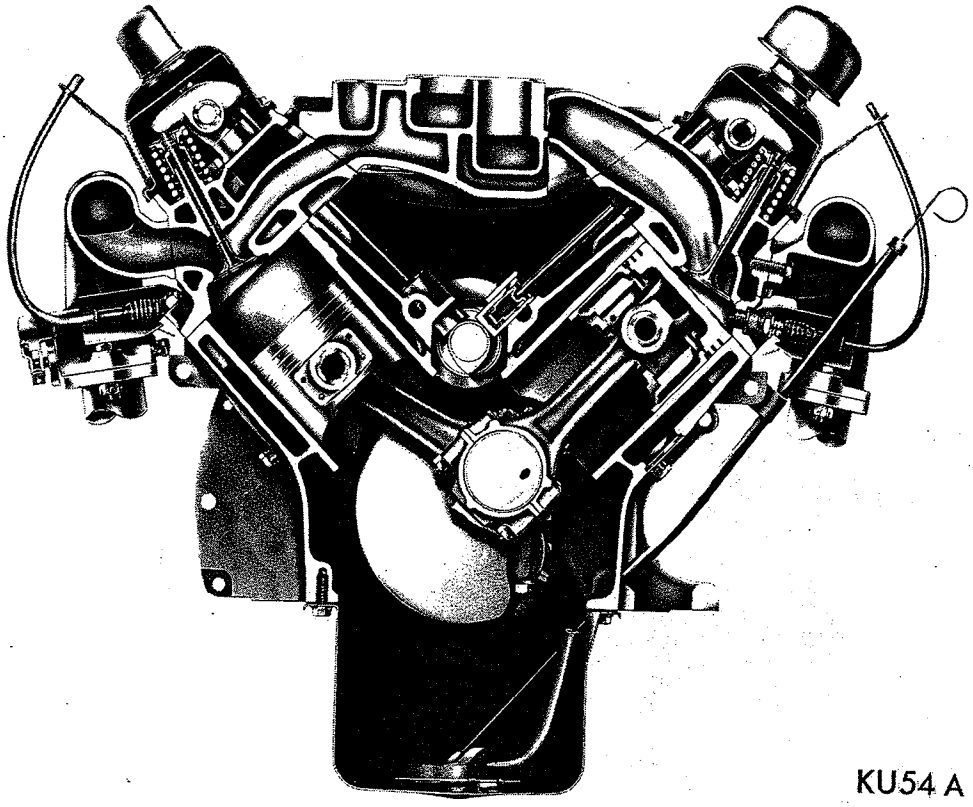


*Fig. 1—Front End Sectional View*

MyMopar.com

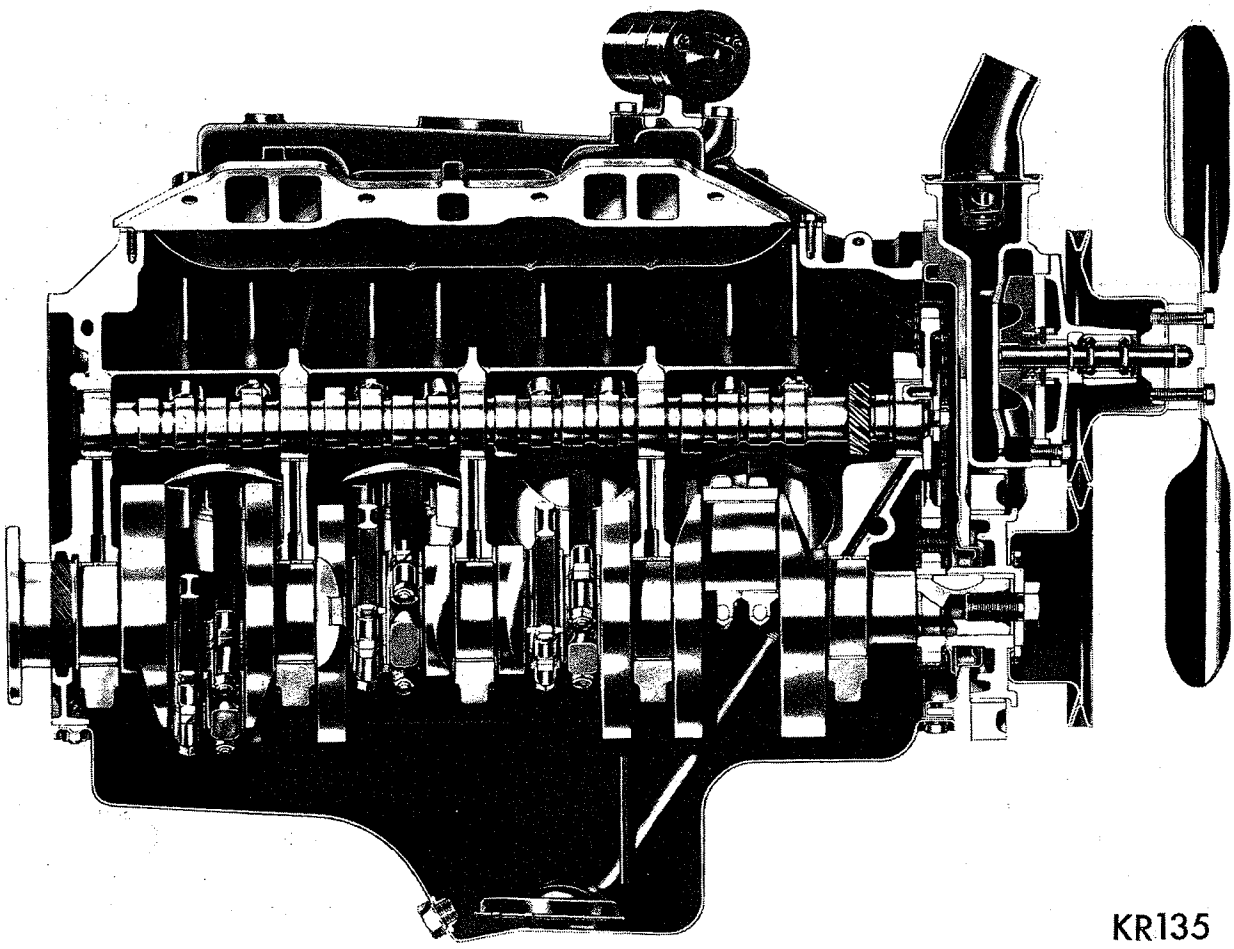


*Fig. 2—Left Side Sectional View*

## FRONT ENGINE MOUNTS (Fig. 4)

### *Removal*

(1) Disconnect throttle linkage at transmission and at carburetor.

(2) Raise hood and position fan to clear radiator hose and radiator top tank.

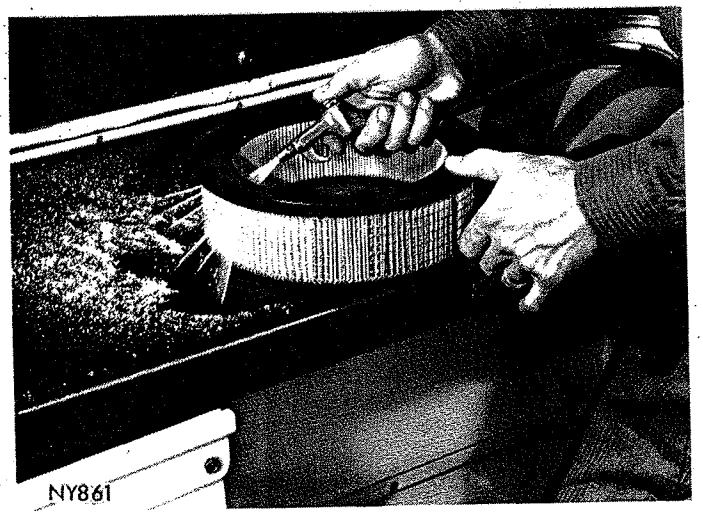


*Fig. 3—Cleaning Filter Element*

(3) Remove torque nuts from insulator studs.

(4) Raise engine just enough to remove front engine mount assembly.

### *Installation*

(1) Install insulator to engine bracket and tighten

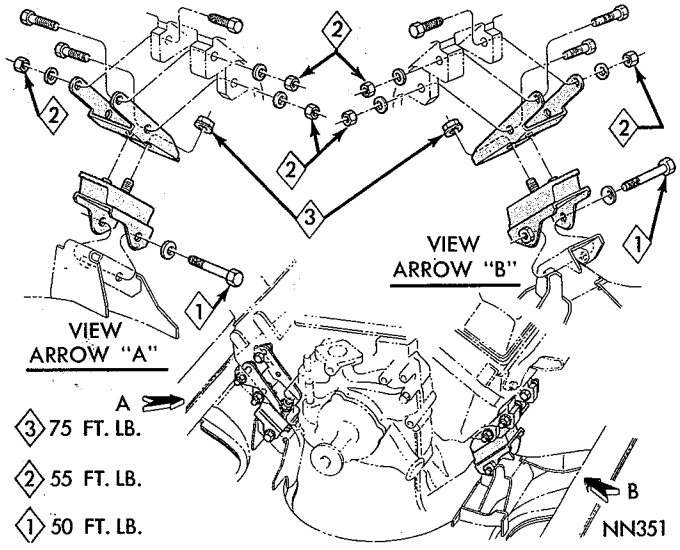


*Fig. 4—Front Engine Mounts (116", 117", 119" and 121" Wheelbase)*

MyMopar.com

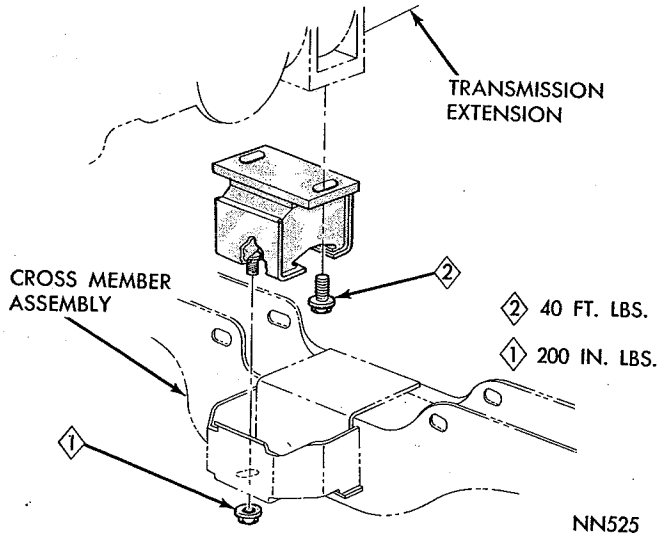


*Fig. 5—Engine Rear Support (116" and 117" Wheelbase except 4-Speed Transmission)*

to specified torque.

(2) Lower the engine and install washers and prevailing torque nuts to insulator studs; tighten nuts to specified torque.

(3) Connect throttle at transmission and carburetor.

## REAR ENGINE MOUNT (Fig. 5, 6 and 7)

### Removal

(1) Raise vehicle on hoist.

(2) Install transmission jack.

(3) Remove rear engine crossmember from frame and remove rear mount.

### Installation

(1) Install rear engine mount to crossmember and tighten nut to specified torque.

(2) Install rear crossmember to frame and tighten bolts to specified torque.

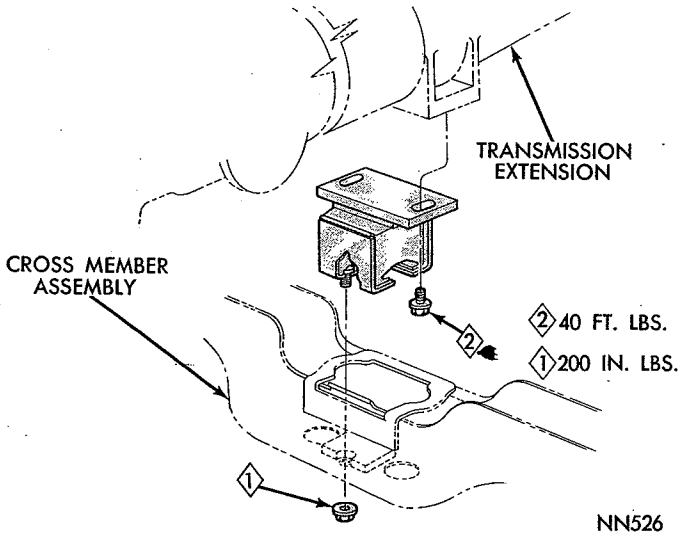


*Fig. 6—Engine Rear Support (116" and 117" Wheelbase with 4-Speed Transmission)*

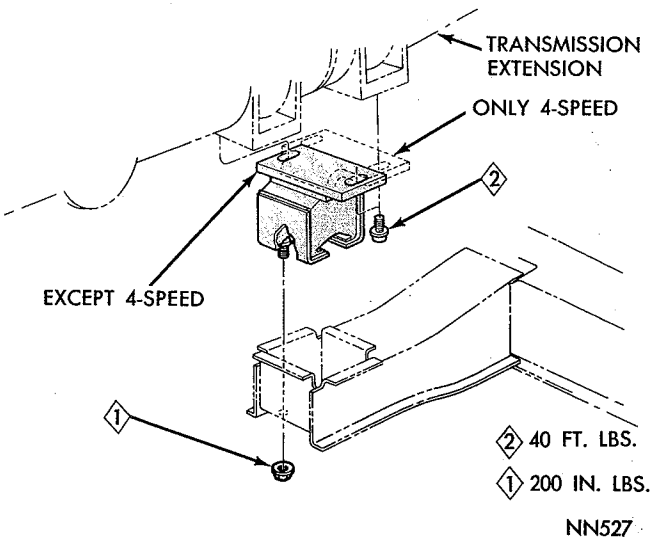


*Fig. 7—Engine Rear Support (119" and 121" Wheelbase)*

## REMOVAL OF ENGINE ASSEMBLY

(1) Scribe the outline of hinge brackets on hood to assure proper adjustments when installing.

(2) Remove hood.

(3) Drain cooling system and remove battery.

(4) Remove all hoses, fan shroud, disconnect oil cooler lines and remove radiator.

(5) Disconnect fuel lines and wires attached to engine units. Remove air cleaner and carburetor. .

(6) Attach engine lifting fixture Tool C-3466 to carburetor flange studs on intake manifold.

(7) Raise vehicle on a hoist and install engine support fixture Tool C-3487 on the frame to support rear of engine.

(8) Drain transmission and torque converter.

(9) Disconnect exhaust pipes at manifolds, propeller shaft, wires, linkage, cable, and oil cooler lines at the transmission.

(10) Remove engine rear support crossmember and remove transmission from vehicle.

(11) Lower vehicle and attach chain hoist to fixture eyebolt.

(12) Remove engine front mounting bolts. Raise engine with a chain hoist and work engine out of chassis.

(13) Place engine in repair stand Tool C-3167 and adapter C-3662 for disassembly, using transmission mounting bolts.

## INSTALLING ENGINE ASSEMBLY

(1) Attach engine lifting fixture Tool C-3466 to carburetor flange studs on intake manifold.

(2) Attach chain hoist to fixture eyebolt.

(3) Remove engine from repair stand and lower engine carefully until engine is positioned in vehicle.

MyMopar.com

(4) Install engine support fixture Tool C-3487 on the frame and adjust to support rear of engine.

(5) Remove chain hoist from fixture eyebolt.

(6) Raise vehicle on hoist, install and tighten engine front support mounting bolts.

(7) Install transmission and engine rear support crossmember.

(8) Lower engine into position and install engine rear support crossmember bolts. Remove engine support fixture Tool C-3487 from frame.

(9) Connect propeller shaft, wires, linkage, cable, oil cooler lines at the transmission, connect exhaust pipes to manifold using new gaskets. Install transmission filler tube.

(10) Lower vehicle and install radiator, fan shroud, hoses, oil cooler lines and connect all wires and linkage.

(11) Remove engine lifting fixture Tool C-3466 from intake manifolds and install carburetor and fuel lines. Connect throttle linkage.

(12) Install hood, using scribe marks for proper alignment.

(13) Close all drain cocks and fill cooling system.

(14) Fill engine crankcase and transmission. Refer to "Lubrication" Group 0 for quantities and lubricants to use and check entire system for leaks and correct as necessary.

**Whenever an engine is rebuilt and a new camshaft and/or new tappets are installed, add one quart of factory recommended oil additive to engine oil to aid break-in (Engine Oil Additive No. 1879406) or equivalent. The oil mixture should be left in the engine for a minimum of 500 miles, and drained at the next normal oil change.**

(15) Start engine and run engine until normal operating temperature is reached.

(16) Inspect ignition timing and adjust carburetor as necessary.

(17) Adjust accelerator and transmission linkages. Road test vehicle.

## ROCKER ARMS AND SHAFT ASSEMBLY

The rocker arms are of stamped steel and are arranged on one rocker arm shaft, per cylinder head. The push rod angularity tends to force the pairs of rocker arms toward each other where oilite spacers carry the side thrust at each rocker arm. The rocker shaft is held in place by bolts and stamped steel retainers attached to the five brackets on the cylinder head.

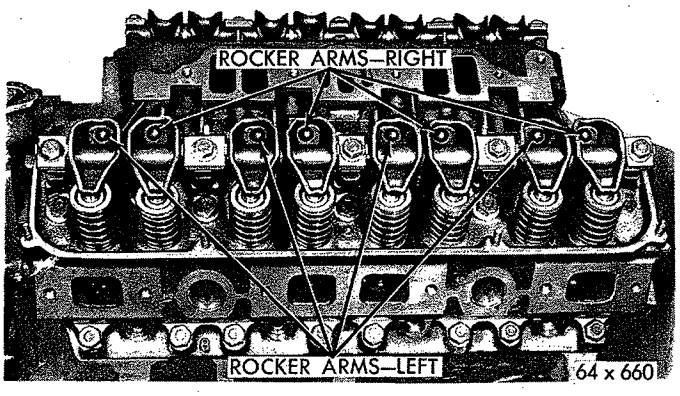


*Fig. 8—Rocker Arm Assemblies Installed*

### *Removal*

(1) Remove cylinder head cover and gasket.

(2) Remove rocker shaft bolts and retainers and remove rocker arms and shaft assembly.

(3) If rocker arm assemblies have been disassembled for cleaning, inspection, or replacement, refer to Figure 8 for proper reassembly.

### *Installation*

(1) Install rocker arms and shaft assembly making sure to install the long stamped steel retainers in the number two and four positions.

(2) Install rocker shafts so that 3/16 inch diameter rocker arm lubrication holes point downward into the rocker arm, so that the 15° angle of these holes point outward towards the valve end of the rocker arms, (Fig. 9). This is necessary to provide proper lubrication to the rocker assemblies.

**The 15° angle of the rocker arm lubrication holes is determined from the center line of the bolt holes through the shaft which are used to attach the shaft assembly to the cylinder head.**

**Use extreme care in tightening the bolts so that tappets have time to bleed down to their operating length. Bulged tapped bodies, bent push rods and permanent noisy operation may result if the tappets**

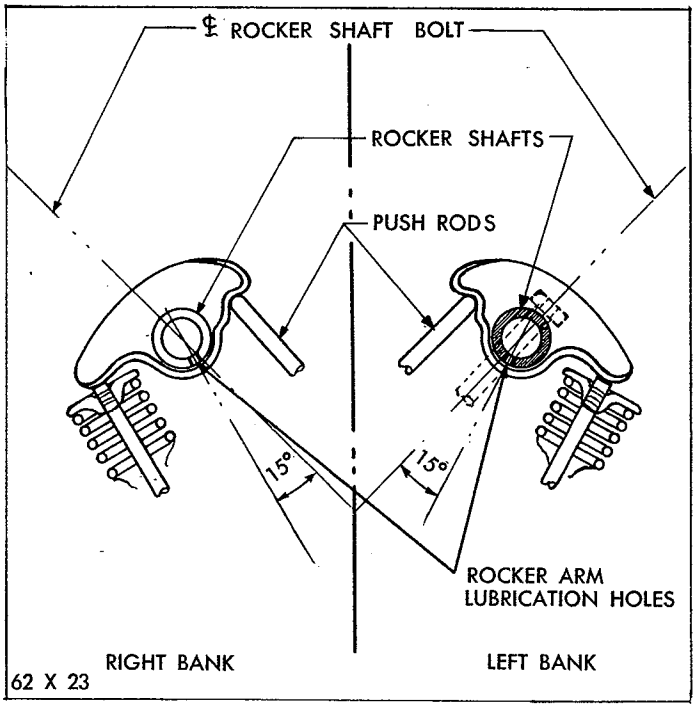


*Fig. 9—Rocker Arm Lubrication Holes*

MyMopar.com

**are forced down too rapidly.**

(3) Tighten rocker shaft bolts to 30 foot-pounds.

## CYLINDER HEADS

The chrome alloy cast iron cylinder heads are held in place by 17 bolts. The spark plugs enter the cylinder head horizontally and are located at the wide edge of the combustion chambers.

### *Removal*

(1) Drain cooling system.

(2) Remove alternator, carburetor, air cleaner and fuel line.

(3) Disconnect accelerator linkage.

(4) Remove vacuum control tube at carburetor and distributor.

(5) Disconnect distributor cap, coil wires and heater hose.

(6) Disconnect heat indicator sending unit wire.

(7) Remove spark plugs.

(8) Remove intake manifold, ignition coil and carburetor as an assembly.

(9) Remove tappet chamber cover.

(10) Remove cylinder head covers and gaskets.

(11) Remove exhaust manifolds.

(12) Remove rocker arms and shaft assembly.

(13) Remove push rods and place them in their respective slots in holder Tool C-3068.

(14) Remove the 17 heads bolts from each cylinder head and remove cylinder heads.

(15) Place cylinder head in holding fixture Tool C-3626.

### *Installation*

(1) Clean gasket surfaces of the cylinder block and cylinder head. Remove all burrs from edges of cylinder heads.

(2) Inspect all surfaces with a straightedge if there is any reason to suspect leakage.

(3) Coat new gaskets with a suitable sealer, MoPar Number 1057794 or equivalent. Install gaskets and cylinder heads.

(4) Install cylinder head bolts. Starting at top center, tighten all cylinder head bolts to 50 foot-pounds in sequence (Fig. 10).

Repeat the procedure, tightening all head bolts to 70 foot-pounds.

(5) Inspect push rods and replace any worn or bent rods.

(6) Install push rods with small ends in the tappets maintaining alignment, using rod, (Figure 11).

(7) Install rocker arm and shaft assembly starting each push rod into its respective rocker arm socket (Fig. 8) making sure to install the long stamped steel retainers in the number two and four positions.

**Use extreme care in tightening bolts to 30 foot-pounds torque so the tappets have time to bleed down to their operating length. Bulged tappet boddies, bent push rods, and permanently noisy operation may result if the tappets are forced down too rapidly.**

(8) Place new cylinder head gasket in position and install cylinder head covers. Tighten nuts to 40 inch pounds.

(9) Install exhaust manifolds and tighten nuts to 30 foot-pounds.

(10) Adjust spark plugs to .035 inch gap and install plugs, tighten plugs to 30 foot-pounds.

(11) Install a new tappet chamber cover and tighten end bolts to 9 foot-pounds.

(12) Install intake manifold, carburetor and ignition coil as an assembly and tighten manifold bolts to 50 foot-pounds.

(13) Install distributor cap. Connect the coil wire, heat indicator sending unit wire, accelerator linkage, spark plug cables and insulators.

(14) Install vacuum tube at carburetor and distributor.

(15) Install alternator and drive belts. Tighten alternator bracket bolts to 30 foot-pounds, and alternator mounting nut to 20 foot-pounds.

(16) Install fuel line and carburetor air cleaner.

(17) Fill cooling system. Adjust belt tensions as outlined in "Cooling System" Group 7.

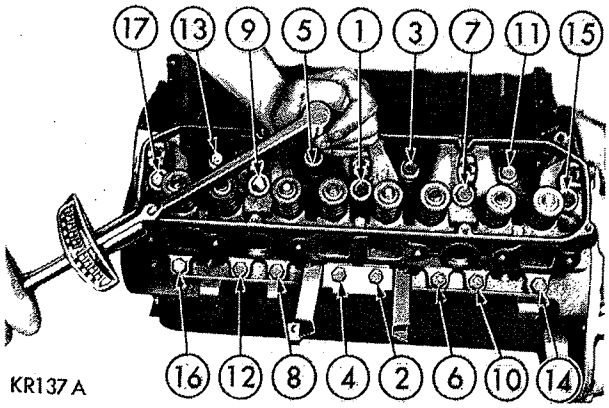


*Fig. 10—Cylinder Head Tightening Sequence*

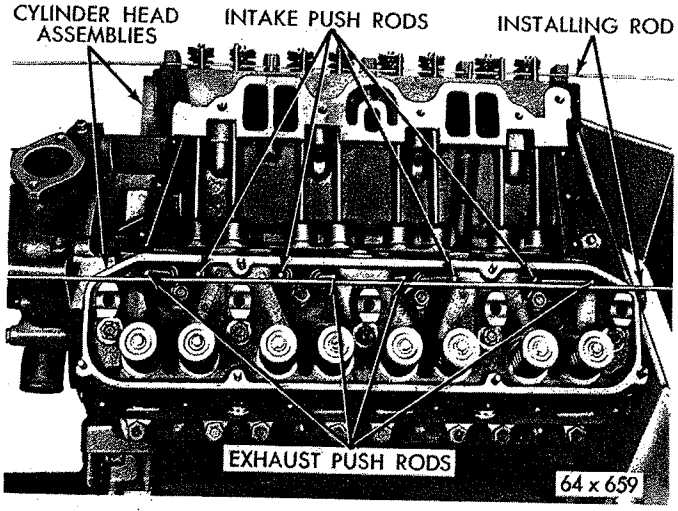


*Fig. 11—Push Rods Installed*

MyMopar.com

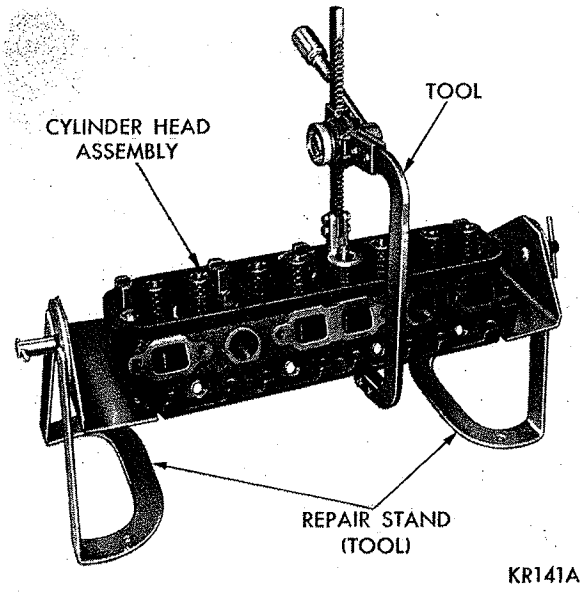


***Fig. 12—Compressing Valve Spring Using Tool C-3422A***

## VALVES AND VALVE SPRINGS

Valves are arranged in-line in the cylinder heads and inclined 30 degrees outward from vertical. The intake and exhaust valves operate in guides that are cast integral with the heads.

### *Removal*

(1) With cylinder head removed, compress valve springs, using Tool C-3422A, as shown in Figure 12.

(2) Remove valve retaining locks, valve spring retainers, valve stem cup seals and valve springs.

(3) Remove any burrs from valve stem lock grooves to prevent damage to the valve guide when valves are removed.

### *Valve Inspection*

(1) Clean valves thoroughly, and discard any burned, warped or cracked valves.

(2) Measure valve stems for wear. The intake valve stem diameter should measure .372 to .373 inch and the exhaust valve stem diameter should measure .371 to .372 inch. If wear exceeds .002 inch, replace the valve.

(3) Remove carbon and varnish deposits from inside of valve guides with cleaner, Tool C-756.

(4) Measure valve stem guide clearance as follows: Install sleeve Tool C-3973 over valve stem (Fig. 13) and install valve.

(5) The special sleeve places the valve at the correct height for measuring with a dial indicator. Attach dial indicator Tool C-3339 to the cylinder head and set it at a right angle to the valve stem being measured (Fig. 14).

(6) Move valve to and from the indicator. Total dial indicator reading should not exceed .017 inch. If the dial indicator reading is excessive or if the stems are scored or worn excessively, ream the guides for new valves with oversize stems.

(7) Service valves with oversize stems are available in .005, .015 and .030 inch oversizes. Reamers to accommodate the oversize valve stem are as follows: Reamer Tool C-3443 (.379 to .380 inch), Reamer Tool C-3430 (.389 to .390 inch), Reamer Tool C-3427 (.404 to .405 inch).

(8) Slowly turn reamer by hand and clean the guide thoroughly before installing new valves.

**CAUTION: Do not attempt to ream the valve guides from standard directly to .030 inch. Use step procedure of .005, .015 and .030 inch so the original valve guide centers may be maintained.**

### *Refacing Valves and Valve Seats*

The intake and exhaust valve faces have a 45 degree angle. Always inspect the remaining valve margin after the valves are refaced (Fig. 15). Valves with less than 3/64 inch margin should be discarded.

(1) The angle of both the valve and seat should be identical. When refacing valve seats, it is important that the correct size valve guide pilot be used for

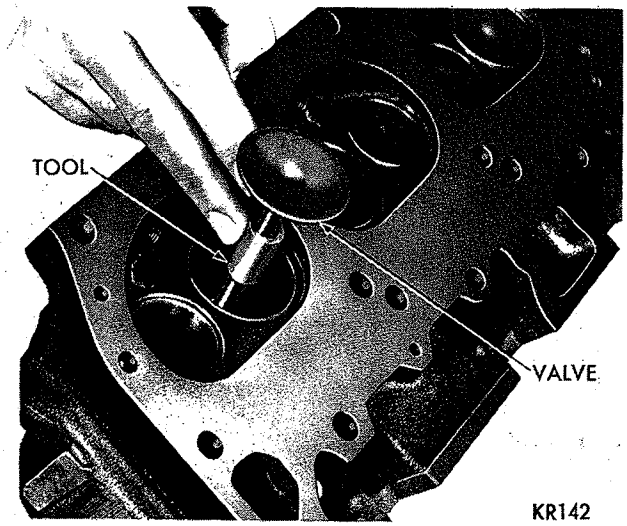


***Fig. 13—Installing Valve and Tool C-3973***

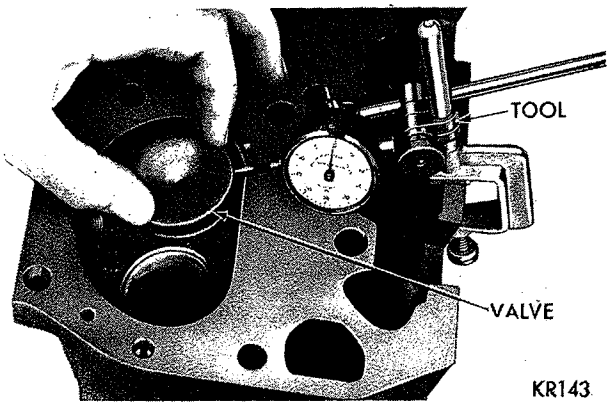


***Fig. 14—Measuring Guide Wear Using Tool C-3339***

MyMopar.com

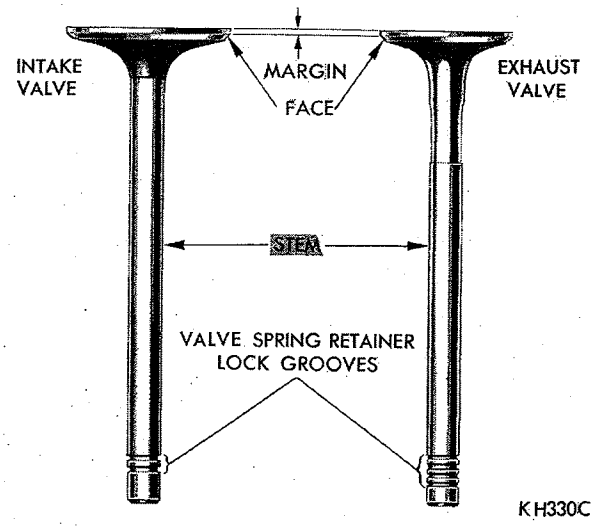


*Fig. 15—Intake and Exhaust Valves*

reseating stones. A true and complete valve seat surface must be obtained.

(2) Inspect valve seat with Prussian blue to determine where valve contacts seat. To do this, coat valve seat lightly with Prussian blue, then set valve in place. Rotate valve with light pressure. If the blue is transferred to the center of the valve face, the contact is satisfactory. If the blue is transferred to the top edge of the valve face, lower the valve seat with a 30° stone. If the blue is transferred to the bottom edge of the valve face raise the valve seat with a 60° stone.

(3) When the seat is properly positioned the width of the intake seats should be 1/16 to 3/32 inch. The width of the exhaust seats should be 3/64 to 1/16 inch.

(4) Measure the concentricity of the valve seat usin dial indicator No. 13725. The total runout should not exceed .003 inch (total indicator reading).

(5) When valves and seats are reground, the position of the valve in the cylinder head is changed, shortening the operating length of the hydraulic tappet. This means that the plunger is operating closer to its "bottomed" position, and less clearance is available for thermal expansion of the valve mechanism during high speed driving.

(6) The design of the valve mechanism includes a safety factor to allow for a limited amount of wear, and the refacing of the valves and seats.

(7) To insure that limits have not been exceeded, the dimension from valve spring seat in the head to the valve tip should be measured with gauge, Tool C-3648 (Fig. 16).

(8) The end of the cylindrical gauge and the bottom of slotted area represent the maximum and minimum allowable extension of the valve stem tip beyond the spring seat.

(9) If the tip exceeds the maximum, grind stem tip to within gauge limits. Clean tappets if tip grinding is required.

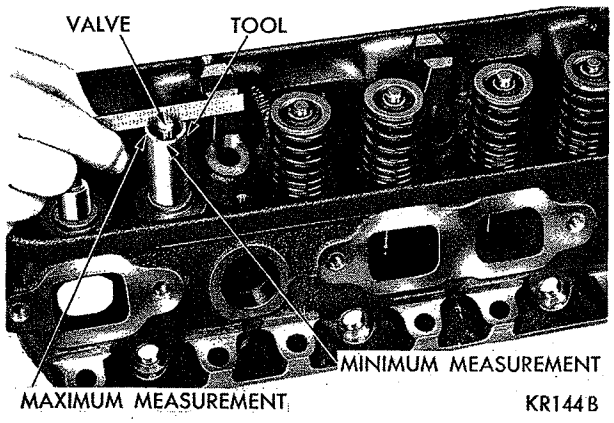


*Fig. 16—Measuring Valve Stem Length Using Tool C-3648*

### Testing the Valve Springs

(1) Whenever valves are removed for inspection, reconditioning or replacement, the valve springs should be tested. As an example, the compressed length of the spring to be tested is 1 15/32 inches. Turn the table of Tool C-647 until the surface is in line with the 1 15/32 inch mark on the threaded stud and the zero mark to the front. Place the spring over the stud on the table and lift the compressing lever to set the tone device. Pull on the torque wrench until a ping is heard. Take the reading on torque wrench at this instant. Multiply this reading by two. This will give the spring load at the test length. Fractional measurements are indicated on the table for finer adjustments. The valve springs should test 187 to 203 pounds when compressed to 1 15/32 inch. Refer to specifications to obtain specified height and minimum allowable tension. Discard the springs that do not meet specifications.

(2) Inspect each valve spring for squareness at both ends with a steel square and surface plate (Fig. 17).

(3) If the spring is more than 1/16 inch out of square, install a new spring.

### Installation

(1) Coat valve stems with lubricating oil and insert

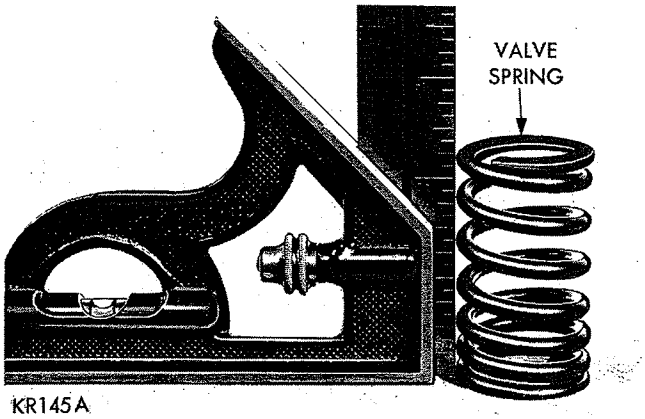


*Fig. 17—Inspecting Valve Spring Squareness*

MyMopar.com

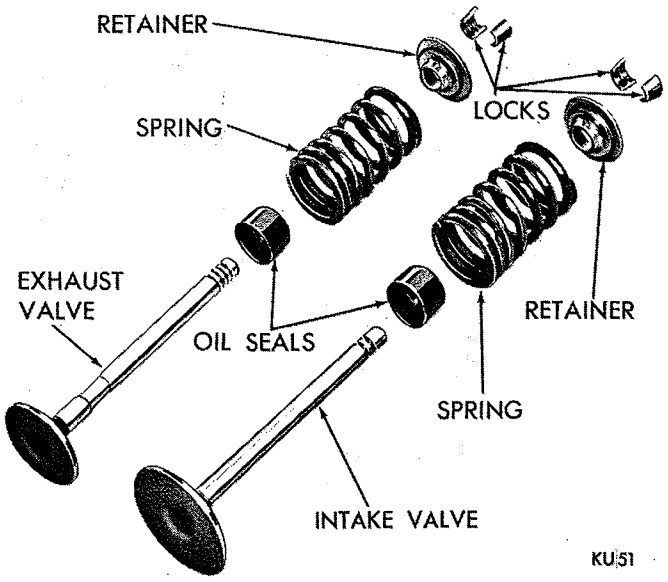


*Fig. 18—Valve Assembly (Disassembled View)*

them in position in cylinder head.

(2) Install new cup seals on the intake and exhaust valve stems and over valve guides (Fig. 18 and 19) and install valve springs and retainers.

(3) Compress valve springs with Tool C-3422A. Install locks and release tool.

**If valves and/or seats are reground, measure installed height of the springs. Make sure measurement is taken from the bottom of spring seat in cylinder head to bottom surface of spring retainer. If the height is greater than 1 57/64 inches, install a 1/16 inch spacer in the head counterbore to bring the spring height back to normal 1 53/64 to 1 57/64 inch. (If spacers are installed, measure from the top of the spacer.)**

## HYDRAULIC TAPPETS

### *Preliminary to Checking the Hydraulic Tappets*

(1) Before disassembling any part of the engine to correct tappet noise, read the oil pressure at the gauge and check the oil level in the oil pan. The pressure should be between 45 and 65 pounds at 1000 R.P.M.

(2) The oil level in the pan should never be above the "full" mark on dipstick, or below the "add oil" mark. Either of these two conditions could be responsible for noisy tappets.

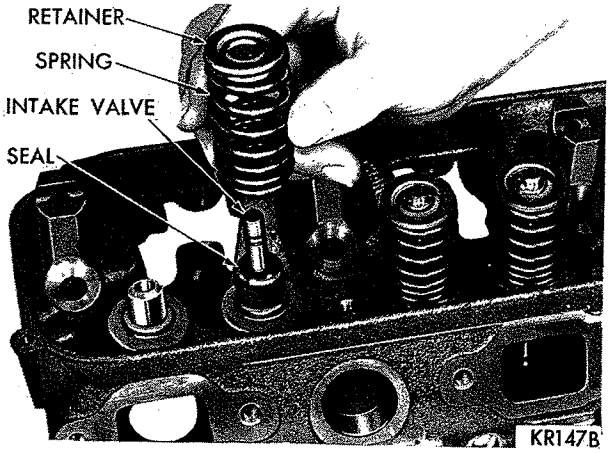


*Fig. 19—Installing Valve, Spring and Cup Seal*

### *Oil Level Too High*

(3) If oil level is above the "full" mark on dipstick, it is possible for the connecting rods to dip into the oil while engine is running and create foam. Foam in oil pan would be fed to the hydraulic tappets by the oil pump causing them to lose length and allow valves to seat noisily.

### *Oil Level Too Low*

(4) Low oil level may allow oil pump to take in air which, when fed to the tappets, causes them to lose length and allows valves to seat noisily. Any leaks on intake side of pump through which air can be drawn will create the same tappet action. When tappet noise is due to aeration, it may be intermittent or constant, and usually more than one tappet will be noisy. When oil level and leaks have been corrected, engine should be operated at fast idle for sufficient time to allow all of the air inside of the tappets to be bled out.

### *Tappet Noise Diagnosis*

(1) To determine source of tappet noise, operate engine at idle with cylinder head covers removed.

(2) Feel each valve spring or rocker arm to detect noisy tappet. The noisy tappet will cause the affected spring and/or rocker arm to vibrate or feel rough in operation.

**Worn valve guides or cocked springs are sometimes mistaken for noisy tappets. If such is the case, noise may be dampened by applying side thrust on the valve spring. If noise is not appreciably reduced, it can be assumed the noise is in the tappet. Inspect the rocker arm push rod sockets and push rod ends for wear.**

(3) Valve tappet noise ranges from light noise to a heavy click. A light noise is usually caused by excessive leakdown around the unit plunger which will necessitate replacing the tappet, or by the plunger partially sticking in the tappet body cylinder. A heavy click is caused either by a tappet check valve not seating, or by foreign particles becoming wedged between the plunger and the tappet body, causing the plunger to stick in the down position. This heavy click will be accompanied by excessive clearance between the valve stem and rocker arm as valve closes. In either case, tappet assembly should be removed for inspection and cleaning.

### *Tappet Removal*

(1) The tappet can be removed without removing

MyMopar.com

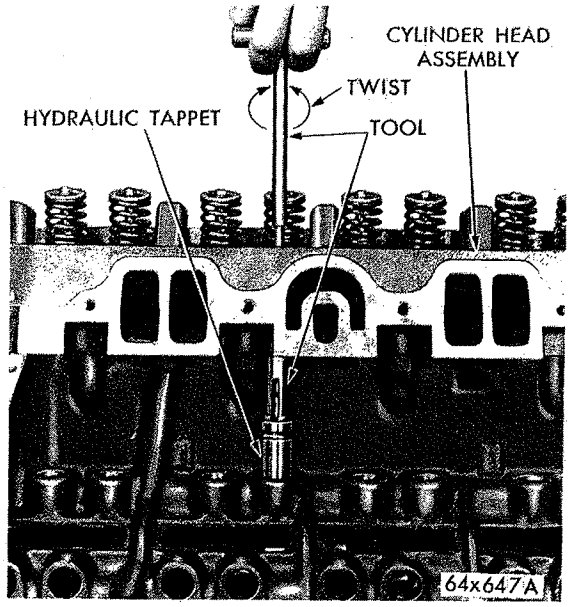


*Fig. 20—Removing Tappet Using Tool C-3661*

intake manifold or cylinder heads by following this recommended procedure: Remove cylinder head covers.

(2) Remove rocker arms and shaft assembly.

(3) Remove push rods and place them in their respective holes in Tool C-3068.

(4) Slide Tool C-3661 through push rod opening in cylinder head and seat tool firmly in the head of tappet.

(5) Pull tappet out of bore with a twisting motion, as shown in Figure 20.

If all tappets are to be removed, remove hydraulic tappets and place them in their respective holes in tappet and push rod holder, Tool C-3068. This will insure installation of the tappets in their original locations.

**A diamond shaped marking stamped on the engine numbering pad indicates that some tappet bodies are .008 inch oversize.**

**CAUTION: The plunger and tappet bodies are not interchangeable. The plunger and valve must always be fitted to the original body. It is advisable to work on one tappet at a time to avoid mixing of parts. Mixed parts are not compatible. Do not disassemble a tappet on a dirty work bench.**

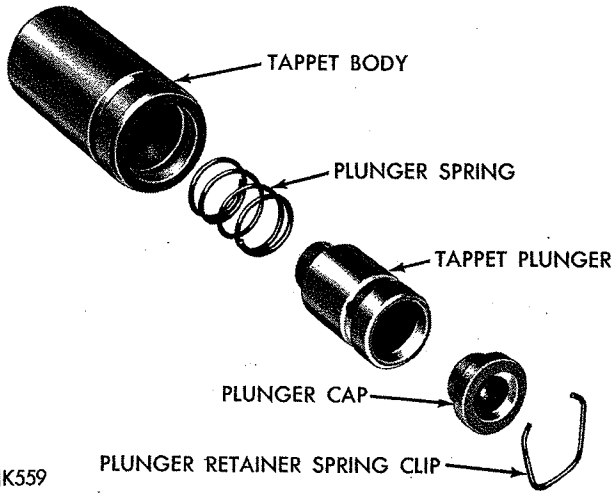


*Fig. 21—Hydraulic Tappet Assembly (Disassembled View)*

### *Disassembly (Fig. 21)*

(1) Pry out plunger retainer spring clip.

(2) Clean varnish deposits from inside of tappet body above plunger cap.

(3) Invert tappet body and remove plunger cap, plunger, flat check valve, check valve spring, check valve retainer and plunger spring.

(4) Separate plunger, check valve retainer and check valve spring. Place all parts in their respective place in tappet holder, Tool C-3068.

### *Cleaning and Assembly*

(1) Clean all tappet parts in a solvent that will remove all varnish and carbon.

(2) Replace tappets that are unfit for further service with new assemblies.

(3) If plunger shows signs of scoring or wear and valve is pitted, or if valve seat on end of plunger indicates any condition that would prevent valve from seating, install a new tappet assembly.

(4) Assemble tappets (Fig. 21).

### *Testing*

(1) Fill a pan with clean kerosene.

(2) Remove cap from plunger and plunger from tappet body.

(3) Fill tappet body with kerosene and install plunger.

(4) Unseat check valve with a brass rod to permit complete installation of plunger. Replace cap.

(5) Hold tappet in an upright position and insert lower jaw of pliers, Tool C-3160, in the groove of tappet body (Fig. 22).

(6) Engage jaw of pliers with top of tappet plunger. Test leakdown by compressing the pliers. If plunger collapses almost instantly as pressure is applied, disassemble tappet, clean and test again (Fig. 22).

(7) If tappet still does not operate satisfactorily after cleaning, install a new tappet assembly.

### *Inspection*

If the tappet or bore in cylinder block is scored, scuffed, or shows signs of sticking, ream the bore to next oversize.

### *Installation*

(1) Lubricate tappets.

(2) Install tappets and push rods in their original positions.

(3) Install rocker arm and shaft assembly.

(4) Start and operate engine. Warm up to normal

MyMopar.com

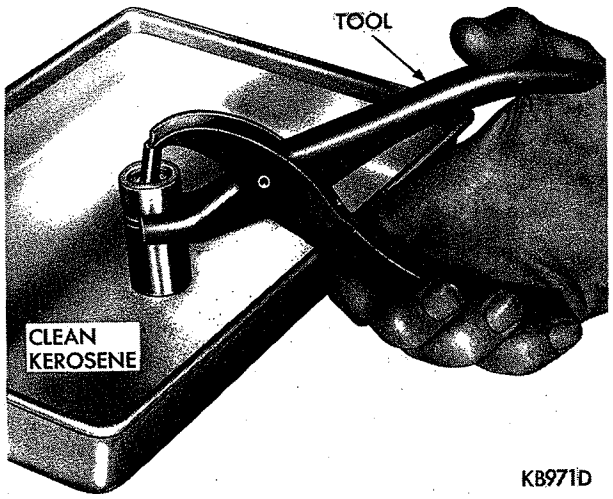


*Fig. 22—Testing Tappet Using Tool C-3160*

operating temperature.

**CAUTION: To prevent damage to valve mechanism, engine must not be run above fast idle until all hydraulic tappets have filled with oil and have become quiet.**

## VALVE TIMING

### *(All Models)*

(1) Turn crankshaft until NO. 6 exhaust valve is closing and NO. 6 intake valve is opening.

(2) Insert a ¼ inch spacer between rocker arm pad and stem tip of NO. 1 intake valve (second valve on the left bank).

(3) Install a dial indicator so plunger contacts valve spring retainer as nearly perpendicular as possible.

(4) Allow spring load to bleed tappet down giving in effect a solid tappet. Zero the indicator.

(5) Turn the crankshaft clockwise (normal running direction) until intake valve has lifted .013 inch with 252° camshaft and .034 inch with 256-260° camshaft. See specifications for engine application. The timing on the timing indicator, located on the chain case cover, should read from 10 degrees BTDC to 2 degrees ATDC. If the reading is not within specified limits:

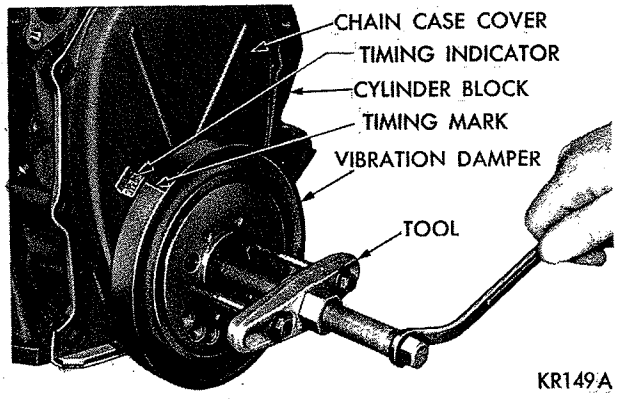


*Fig. 23—Removing Vibration Damper Assembly Using Tool C-3688*

Inspect timing sprocket index marks, inspect timing chain for wear, and determine accuracy of the DC mark on timing indicator. Turn crankshaft counterclockwise until valve is closed and remove the indicator and spacer.

**CAUTION: Do not turn crankshaft any further clockwise, as the valve spring might bottom and result in serious damage.**

## TIMING SPROCKETS AND CHAIN

### *Removal*

(1) Drain cooling system and remove radiator and water pump assembly.

(2) Remove crankshaft vibration damper attaching bolt.

(3) Remove two of the pulley bolts, install Tool C-3688, and pull damper assembly off end of crankshaft (Fig. 23).

(4) Remove chain cover and gasket.

(5) Slide crankshaft oil slinger off end of crankshaft.

### *Testing Timing Chain for Stretch*

(1) Place a scale next to the timing chain so any movement of the chain may be measured.

(2) Place a torque wrench and socket over camshaft sprocket attaching bolt and apply torque in the direction of crankshaft rotation to take up slack; 30 foot-pound (with cylinder heads installed) or 15 foot-pounds (cylinder heads removed).

(3) Holding a scale with dimensional reading even with edge of a chain link, apply torque in the reverse direction 30 foot-pounds (with cylinder heads installed) or 15 foot-pounds (cylinder heads removed), and note amount of chain movement (Fig. 24).

(4) Install a new timing chain, if its movement exceeds 3/16 inch.

**With torque applied to the camshaft sprocket bolt, crankshaft should not be permitted to move. It may**

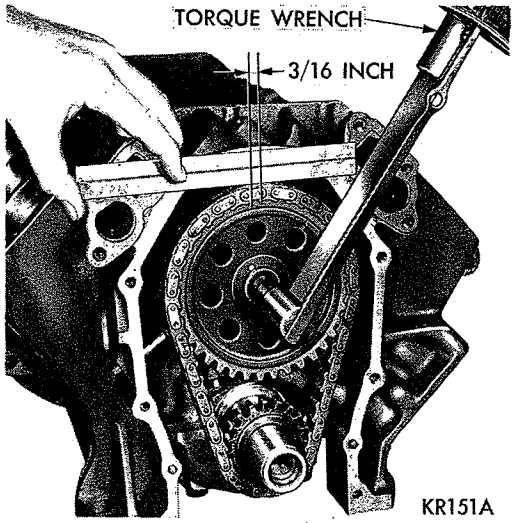


*Fig. 24—Measuring Chain Stretch*

MyMopar.com

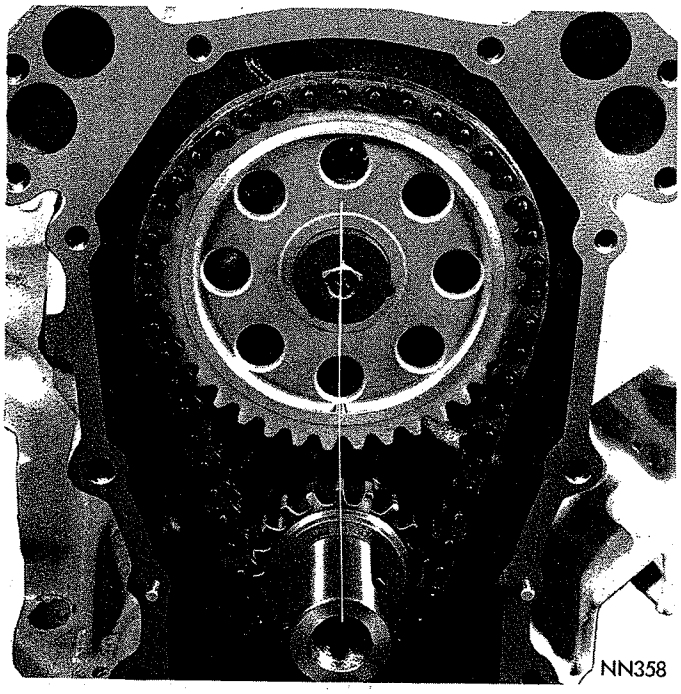


*Fig. 25—Alignment of Timing Marks*

**be necessary to block crankshaft to prevent rotation.**

(5) If chain is satisfactory, slide crankshaft oil slinger over shaft and up against sprocket (flange away from sprocket).

(6) If chain is not satisfactory, remove camshaft sprocket attaching bolt.

(7) Remove timing chain with crankshaft and camshaft sprockets.

### *Installation*

(1) Place camshaft sprocket and crankshaft sprocket on the bench with timing marks on exact imaginary center line through both camshaft and crankshaft sprocket bores.

(2) Place timing chain around both sprockets.

(3) Turn crankshaft and camshaft to line up with keyway location on crankshaft sprocket and dowel holes in camshaft sprocket.

(4) Lift sprockets and chain (keep sprockets tight against chain in position as described).

(5) Slide both sprockets evenly over their respective shafts.

(6) Use a straight edge to measure alignment of timing marks (Fig. 25).

(7) Install washer and camshaft sprocket bolt and tighten to 35 foot-pounds.

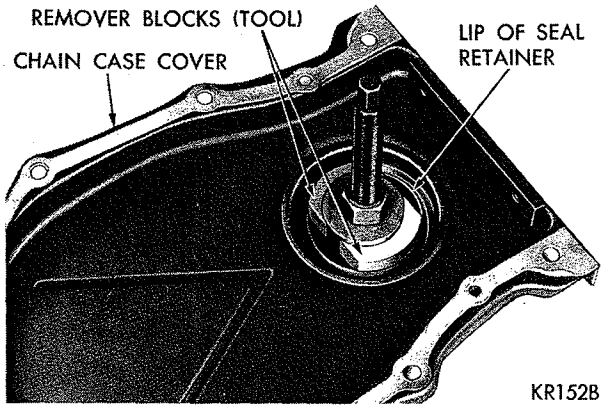


*Fig. 26—Remover Blocks Expanded to Puller Position (Tool C-3506)*

## TIMING CHAIN COVER OIL SEAL REPLACEMENT (Cover Removed from Engine)

### *Removal*

(1) Position remover screw of Tool C-3506 through case cover, inside of case cover up. Position remover blocks directly opposite each other, and force the angular lip between the neoprene and flange of seal retainer.

(2) Place washer and nut on remover screw. Tighten nut as tight as possible by hand, forcing the blocks into the gap to a point of distorting the seal retainer lip (Fig. 26). This is important, **remover is only positioned at this point.**

(3) Place sleeve over retainer and place removing and installing plate into the sleeve.

(4) Place flat washer and nut on the remover screw. Hold center screw and tighten remover nut to remove the seal (Fig. 27).

### *Installation of the Oil Seal*

(1) Insert remover screw through the removing and installing plate so thin shoulder will be facing up.

(2) Insert remover screw with the plate through seal opening (inside of chain case cover facing up).

(3) Place seal in cover opening, with neoprene down. Place seal installing plate into the new seal, with protective recess toward lip of seal retainer (Fig. 28).

**The lip of the neoprene seal must be toward source of oil.**

(4) Install flat washer and nut on remover screw, hold screw and tighten nut (Fig. 29).

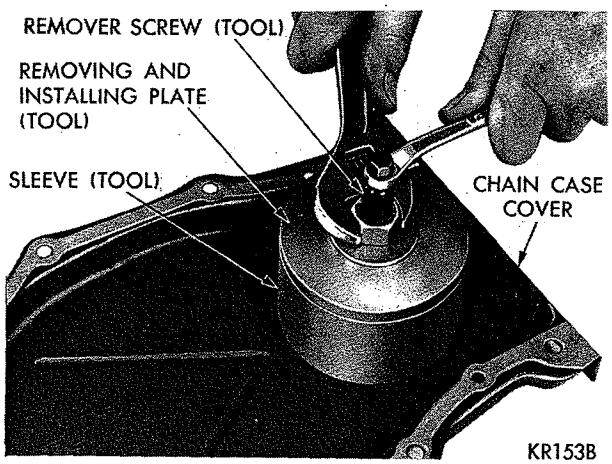


*Fig. 27—Removing Oil Seal (Tool C-3506)*

MyMopar.com

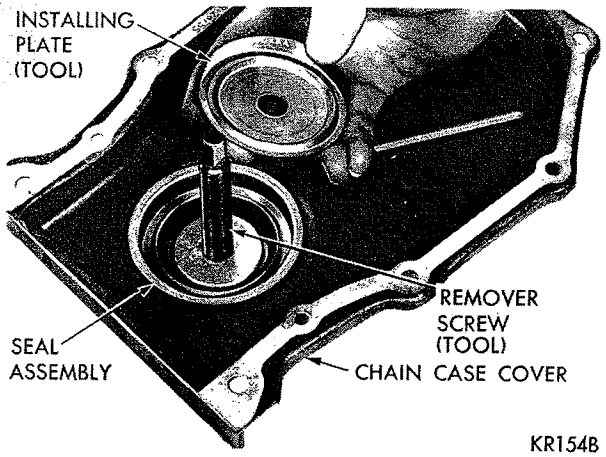


***Fig. 28—Positioning Installer Plate on a New Seal (Tool C-3506)***

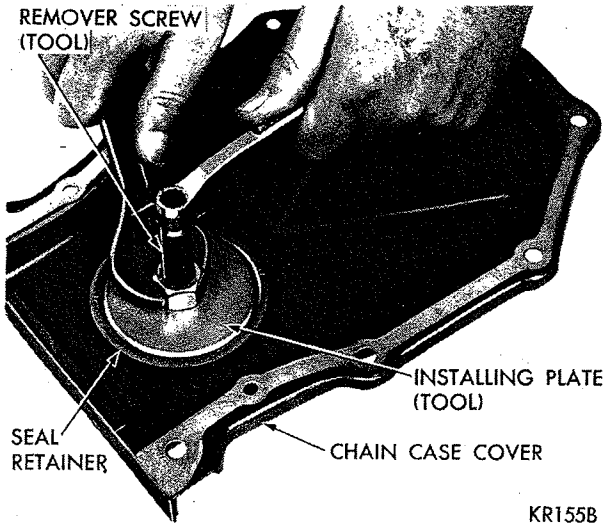


***Fig. 29—Installing New Seal (Tool C-3506)***

(5) The seal is properly installed when the neoprene is tight against face of cover. Try to insert a .0015 inch feeler gauge between the neoprene and the cover (Fig. 30). If the seal is installed properly, feeler gauge cannot be inserted.

**It is normal to find particles of neoprene collected between seal retainer and crankshaft oil slinger after seal has been in operation.**

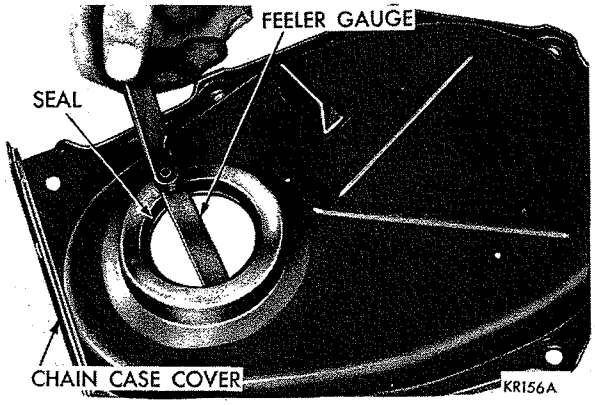


***Fig. 30—Inspecting Seal for Proper Seating***

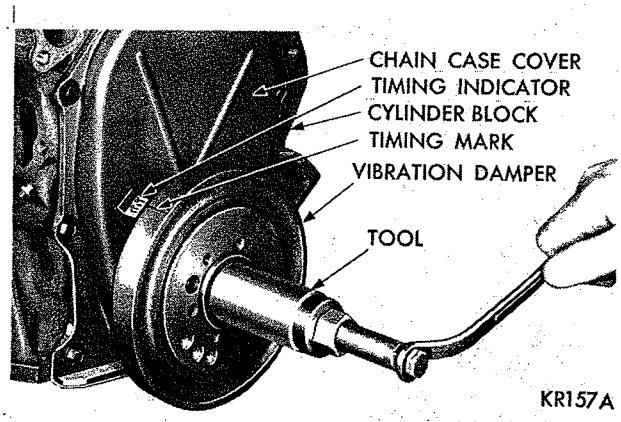


***Fig. 31—Installing Vibration Damper Assembly Using Tool C-3688***

### *Installing the Chain Case Cover*

(1) Be sure mating surfaces of chain case cover and cylinder block are clean and free from burrs.

(2) Using a new gasket slide chain case cover over locating dowels. Install and tighten bolts 15 foot-pounds.

### *Installing Vibration Damper*

(1) Place damper hub key in the slot in crankshaft, and slide vibration damper on crankshaft.

(2) Place installing tool, part of Tool C-3688 in position and press damper on the crankshaft (Fig. 31).

(3) Install damper retainer washer and bolt. Tighten to 135 foot-pounds.

(4) Slide belt pulley over shaft and attach with bolts and lockwashers.

(5) Tighten bolts to 15 foot-pounds.

## CAMSHAFT

The camshaft has an integral oil pump and distributor drive gear and fuel pump eccentric (Fig. 32).

The rearward camshaft thrust is taken by the rear face of the cast iron camshaft sprocket hub, bearing directly on the front of cylinder block, eliminating need for a thrust plate. The helix of the oil pump and distributor drive gear and camshaft lobe taper both tend to provide a rearward thrust.

### *Removal*

(1) With tappets and the timing chain and

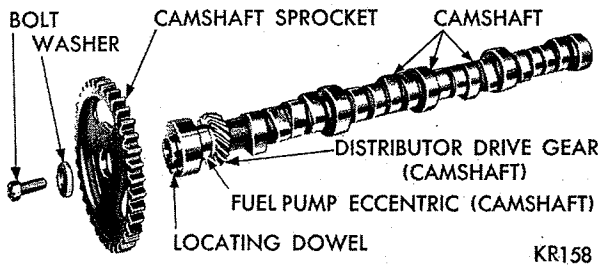


***Fig. 32—Camshaft and Sprocket Assembly (Disassembled View)***

MyMopar.com

sprockets removed, remove distributor and lift out oil pump and distributor drive shaft.

(2) Remove fuel pump to allow fuel pump push rod to drop away from cam eccentric.

(3) Remove camshaft, being careful not to damage camshaft bearings with the cam lobes.

### Installation

(1) Lubricate camshaft lobes and camshaft bearing journals and insert camshaft to within 2 inches of its final position in cylinder block.

(2) Modify Tool C-3509 by grinding off index lug holding the upper arm on the tool and rotate arm 180 degrees.

(3) Install Tool C-3509 in place of distributor drive gear and shaft, as shown in Figure 33.

(4) Hold tool in position with distributor lock plate screw. This tool will restrict camshaft from being pushed in too far and prevent knocking out the welch plug in the rear of cylinder block.

**The tool should remain installed until camshaft and crankshaft sprockets and timing chain have been installed.**

**Whenever an engine is rebuilt and a new camshaft and/or new tappets are installed, one quart of factory recommended oil additive MoPar Part Number 1879406 or equivalent should be added to the engine oil to aid in break-in. The oil mixture should be left in the engine for a minimum of 500 miles. Drain the oil mixture at the next normal oil change.**

**Whenever camshaft is replaced, all of tappet faces must be inspected for crown with a straight edge. If any contact surface is dished or worn, tappet must be replaced.**

## CAMSHAFT BEARINGS

### Removal

(1) With engine completely disassembled, drive out camshaft rear bearing welch plug.

(2) Install proper size adapters and horse shoe washers (part of Tool C-3132A) at the back of each bearing to be removed and drive out bearings (Fig. 34).

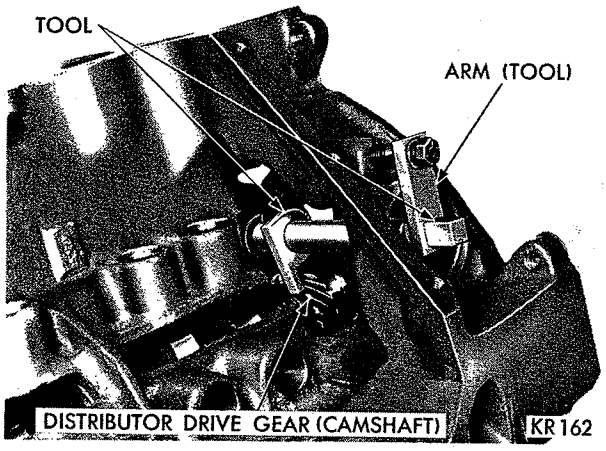


*Fig. 33—Camshaft Holding Tool C-3509*

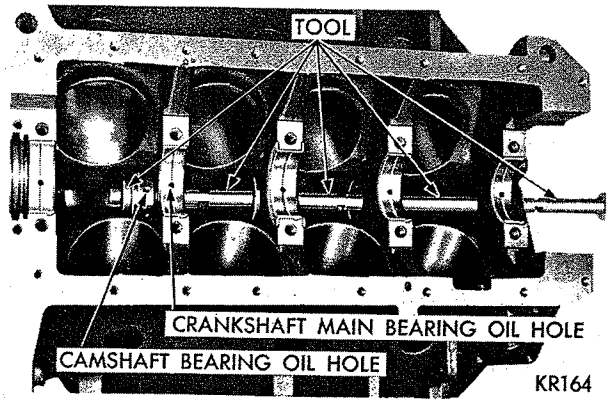


*Fig. 34—Removing Camshaft Bearing Using Tool C-3132A*

### Installation

(1) Install new camshaft bearings with Tool C-3132A. Place new camshaft bearing over proper adapter.

(2) Position bearing in the tool. Install the horse shoe lock and by reversing removal procedure, carefully drive bearing into place (Fig. 34).

(3) Install remaining bearings in like manner.

**Install the NO. 1 camshaft bearing 1/32 inward from the front face of cylinder block.**

The oil holes in camshaft bearings and the cylinder block must be in exact register to insure proper lubrication (Fig. 34).

The camshaft bearing index can be inspected after installation by inserting a pencil flashlight in the bearing. The camshaft bearing oil hole should be perfectly aligned with the drilled oil passage from the main bearing. Other oil holes in the camshaft bearings should be visible by looking down on the left bank oil hole above and between NO. 6 and NO. 8 cylinders to NO. 4 camshaft bearing and on the right bank above and between NO. 5 and 7 cylinders to NO. 4 camshaft bearings. If camshaft bearing oil holes are

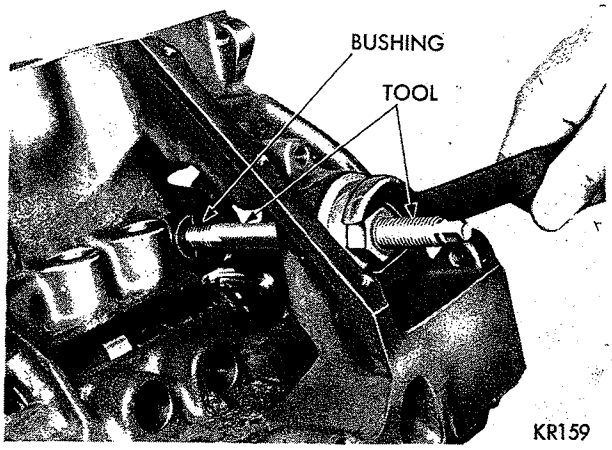


*Fig. 35—Removing Distributor Drive Shaft Bushing Using Tool C-3052*

MyMopar.com

not in exact register, remove and reinstall them correctly. Use Tool C-897 to install a new welch plug at rear of camshaft. **Be sure this plug does not leak.**

## DISTRIBUTOR DRIVE SHAFT BUSHING

### *Removal*

(1) Insert Tool C-3052 into the old bushings and thread down until a tight fit is obtained (Fig. 35).

(2) Hold remover screw and tighten nut until bushing is removed.

### *Installation*

(1) Slide a new bushing over burnishing end of Tool C-3053 and insert tool bushing into the bore, (Fig. 36).

(2) Drive bushing and tool into position, using a soft hammer.

(3) As the burnisher is pulled through the bushing by tightening remover nut, the bushing is expanded tight in the block and burnished to correct size (Fig. 37). **DO NOT REAM THIS BUSHING.**

### *Distributor Timing*

Before installing distributor and oil pump drive shaft, time the engine as follows:

(1) Rotate crankshaft until NO. 1 cylinder is at top dead center on the firing stroke.

(2) When in this position, the straight line on the vibration damper should be under "0" on timing indicator.

(3) Coat shaft and drive gear with engine oil. Install the shaft so that after gear spirals into place, it will index with the oil pump shaft, so slot in top of drive gear will be parallel with center line of crankshaft (Fig. 38).

### *Installation of Distributor*

(1) Hold distributor over mounting pad on cylinder block with vacuum chamber pointing toward center of engine.

(2) Turn rotor until it points forward and to approximate location of No. 1 tower terminal in the distributor cap.

(3) Place distributor gasket in position.

(4) Lower the distributor and engage the shaft in the slot of distributor drive shaft gear.

(5) Turn distributor clockwise until breaker contacts are just separating, install and tighten hold down clamp.

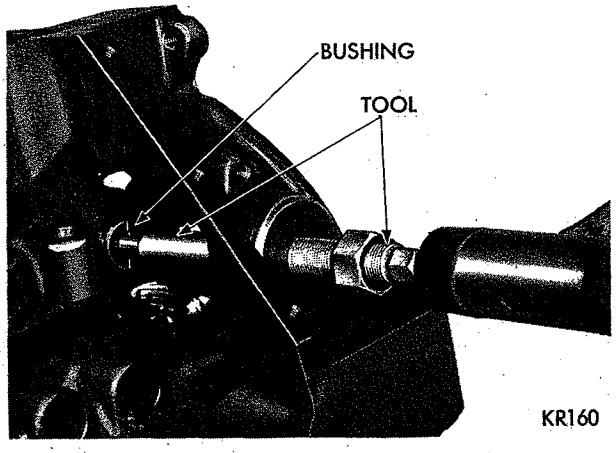


*Fig. 36—Installing Distributor Drive Shaft Bushing Using Tool C-3053*

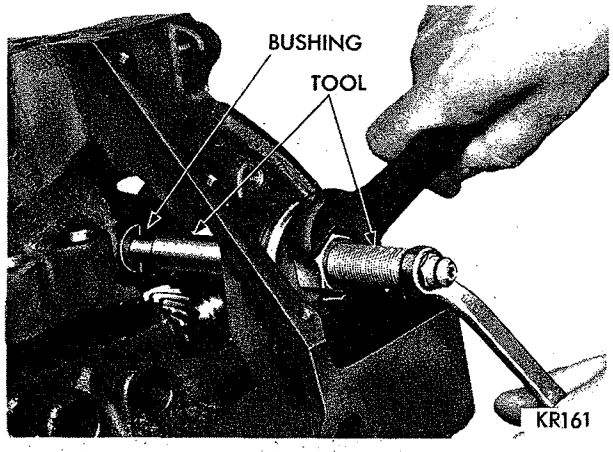


*Fig. 37—Burnishing Distributor Drive Shaft Bushing Using Tool C-3053*

## CYLINDER BLOCK

The cylinder block is of the deep block design which eliminates the need for a torque converter housing adapter plate. Its sides extend three inches below the crankshaft center line.

### *Piston Removal*

(1) Remove top ridge of cylinder bores with a reliable ridge reamer before removing pistons from cylinder block. **Be sure to keep tops of pistons covered during this operation.**

**The pistons and connecting rods must be removed from the top of the cylinder block. When removing piston and connecting rod assemblies from the engine, rotate the crankshaft so each connecting rod is**

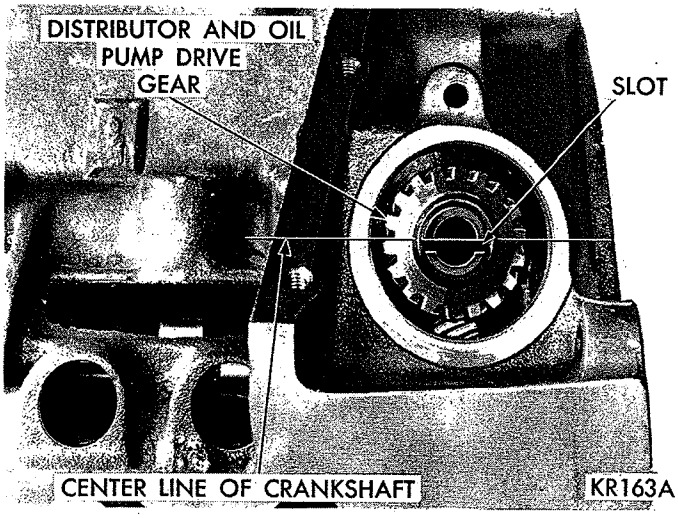


*Fig. 38—Distributor Drive Gear Installed*

MyMopar.com

centered in cylinder bore.

(2) Remove connecting rod cap.

(3) Install Tool C-3221 on one connecting rod bolt and protector over the other bolt and push each piston and rod assembly out of cylinder bore.

(4) After removal, install the corresponding bearing cap on the rod.

### Cleaning and Inspection

(1) Clean cylinder block thoroughly and inspect all core hole plugs for evidence of leaking.

(2) If new core hole plugs are installed, coat the edges of the plug and core hole with a suitable sealer and drive the plugs in place with driver, Tool C-897.

(3) Examine block for cracks or fractures.

### Inspection Cylinder Bores

The cylinder walls should be measured for out-of-round and taper with Tool C-119. If the cylinder bores show more than .005″ out-of-round, or a taper of more than .010″ or if the cylinder walls are badly scuffed or scored, the cylinder block should be rebored and honed, and new pistons and rings fitted. Whatever type of boring equipment is used, boring and honing operation should be closely coordinated with the fitting of pistons and rings in order that specified clearance may be maintained.

### Honing Cylinder Bores

Before honing, stuff plenty of clean rags under the bores, over the crankshaft to keep the abrasive materials from entering the crankcase area.

(1) To remove light scoring, scuffing or scratches from the cylinder walls, use resizing hone Tool C-823 with 220 grit stones and 390 extensions necessary with 383 and 426 cubic inch engines. Usually a few strokes will clean up a bore and maintain the required limits.

(2) Deglazing of the cylinder walls should be done using a cylinder surfacing hone, Tool C-3501, equipped with 280 grit stones (C-3501-3810). 20 to 60 strokes depending on the bore condition will be sufficient to provide a satisfactory surface. Inspect the cylinder walls after each 20 strokes. Use honing oil C-3501-3880 or a light honing oil available from major oil distributors. Do not use engine or transmission oil, mineral spirits or kerosene.

(3) Honing should be done by moving the hone up and down fast enough to get a cross-hatch pattern. When hone marks intersect at 60°, cross hatch angle is most satisfactory for proper seating of rings (See Fig. 39).

(4) After honing, it is necessary that the block be cleaned again to remove all traces of abrasives. Wash cylinder block and crankshaft thoroughly.

**CAUTION: Be sure all abrasives are removed from the engine parts after honing. It is recommended that a solution of soap and water be used with a brush and the parts then thoroughly dried. The bore can be considered clean when it can be wiped clean with a white cloth and the cloth remains clean. Oil bores after cleaning to prevent rusting.**

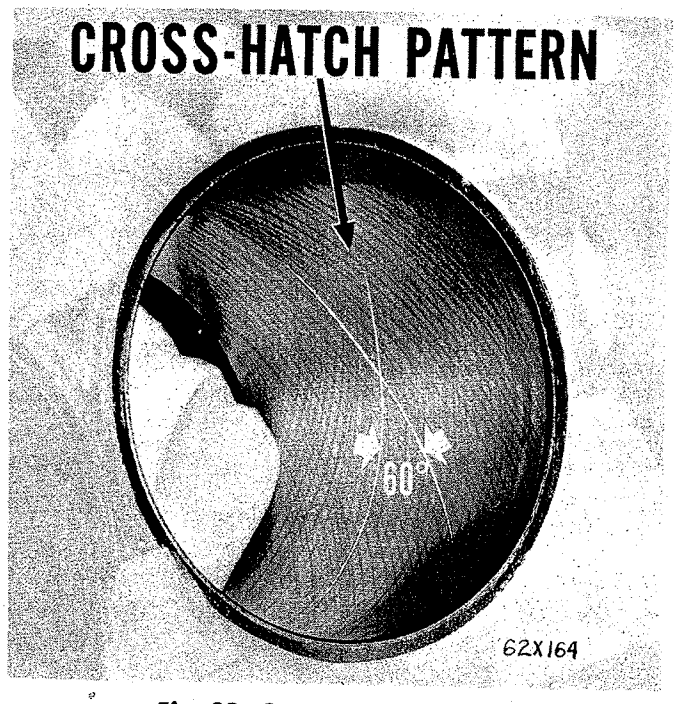


*Fig. 39—Cross Hatch Pattern*

## PISTONS, PINS and RINGS

### Pistons

The pistons are cam ground so that the diameter at the pin boss is less than its diameter across the thrust face. This allows for expansion under normal operating conditions. Under operating temperatures, expansion forces the pin bosses away from each other, thus causing the piston to assume a more nearly round shape. It is important that old or new pistons be measured for taper and elliptical shape before they are fitted into the cylinder bore (See Fig. 40).

### Finished Pistons

All pistons are machined to the same weight in grams, regardless of oversize so piston balance can be maintained. For cylinder bores which have been honed or rebored, pistons are available in standard and the following oversizes: .005, .020, and .040 inch.

### Fitting Pistons

Piston and cylinder wall must be clean and dry. Specified clearance between the piston and the cylinder wall is .0003 to .0013 inch.

Piston diameter should be measured at the top of skirt 90 degrees to piston pin axis. Cylinder bores should be measured halfway down the cylinder bore and transverse to the engine crankshaft center line.

**Pistons and cylinder bores should be measured at normal room temperature, 70 degrees F.**

MyMopar.com

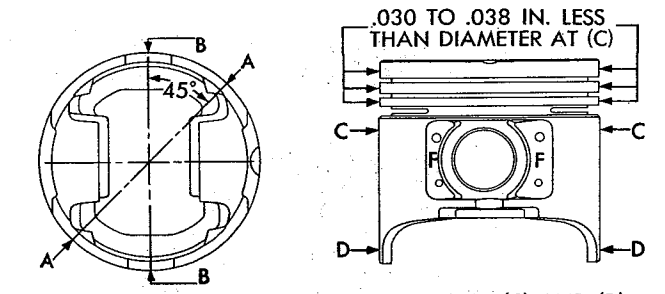


***Fig. 40—Piston Measurements***

All service pistons include pins, and are available in standard and the following oversizes: .005, .020 and .040 inch.

### Fitting Rings

(1) Measure piston ring gap about two inches from bottom of cylinder bore in which it is to be fitted. (An inverted piston can be used to push rings down to insure positioning rings squarely in cylinder wall before measuring.)

(2) Insert feeler stock in the gap. Ring gap should be between .013 to .052 inch for the compression rings and .015 to .062 inch for the oil ring steel rails in standard size bores. Maximum gap on .005 inch O/S bores should be .060 inch for compression rings and .070 inch for the oil ring steel rails.

(3) Measure side clearance between piston ring and ring groove (Fig. 41). Clearance should be .0015 to .003 inches for the top compression ring and intermediate ring. Steel rail service oil ring should be free in groove, but should not exceed .005 inch side clearance.

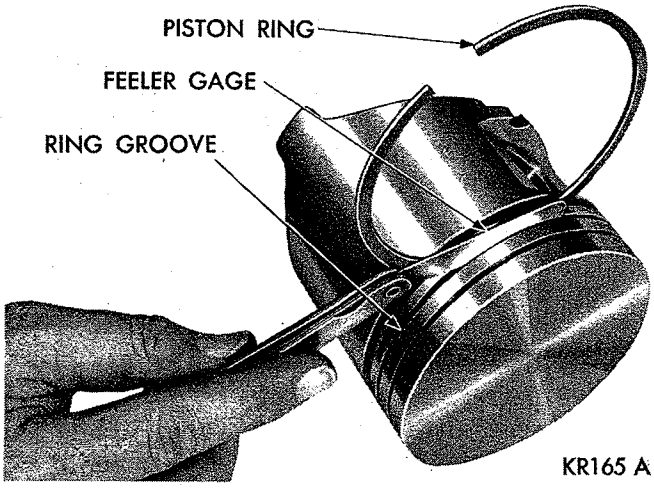


***Fig. 41—Measuring Piston Ring Clearance***

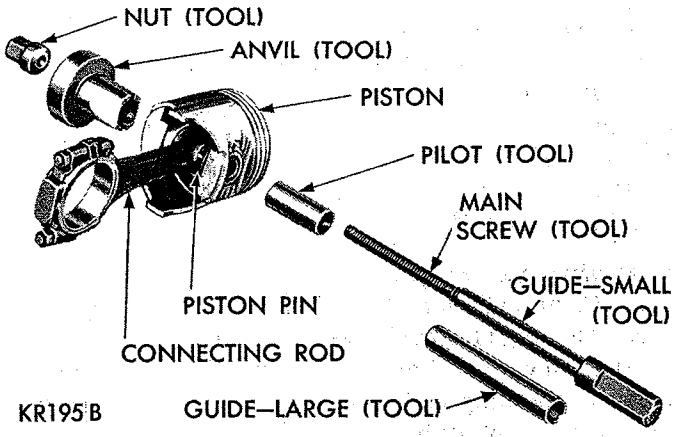


***Fig. 42—Tool Arrangement for Removing Piston Pin Tool C-3684***

(4) Install the three piece oil ring in lower ring groove using instructions in ring package.

(5) Install tin coated ring in middle groove and chrome compression ring in top groove, so side marked "TOP" is up.

(6) For the two top rings use ring installer Tool C-3673 for 383 and 426 cubic inch engines and Tool C-3628 for the 361 cubic inch engines.

### Removal of Piston Pin

(1) Arrange Tool C-3684 parts for removal of piston pin, (Fig. 42).

(2) Install pilot on main screw.

(3) Install main screw through piston pin.

(4) Install anvil over threaded end of main screw with small end of anvil against piston boss.

**Be sure spring is removed from anvil.**

(5) Install nut loosely on main screw and place assembly on a press, (Fig. 43).

(6) Press piston pin out of connecting rod.

**When pin falls free from connecting rod, stop press to prevent damage to bottom of anvil.**

(7) Remove tool from piston.

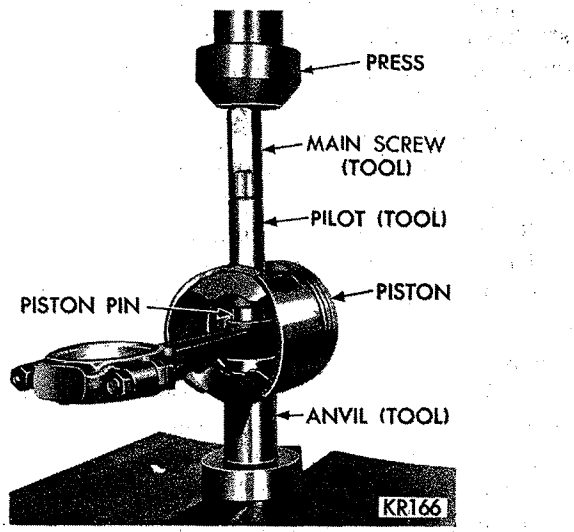


***Fig. 43—Removing Piston Pin Tool C-3684***

MyMopar.com

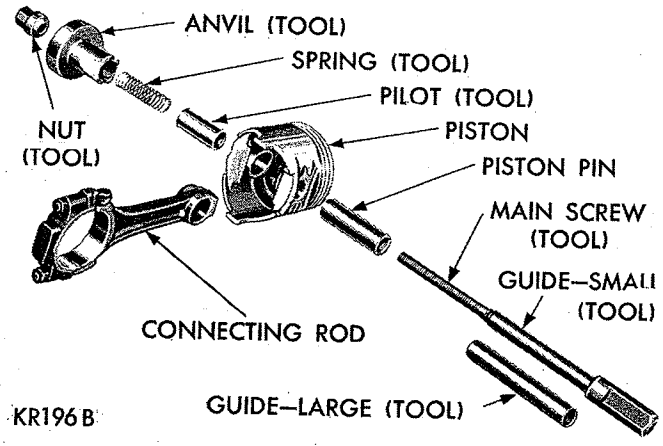


***Fig. 44—Tool Arrangement for Installing Piston Pin Tool C-3684***

### *Installation of Piston Pin*

(1) Test piston pin fit in the piston. It should be a sliding fit in the piston at 70 degrees F. Piston pins are supplied in standard sizes only.

(2) Lubricate piston pin holes in the piston and connecting rod.

(3) Arrange Tool C-3684 parts for installation of piston pin (Fig. 44).

(4) Install spring inside the pilot and install spring and pilot in the anvil. Install piston pin over main screw.

(5) Place piston, with "front" up, over the pilot so pilot extends through piston pin hole.

(6) Position connecting rod over the pilot which extends through piston pin hole.

**Assemble rods to pistons of the right cylinder bank (2, 4, 6, and 8) with indent on piston head opposite to the larger chamfer on the large bore end of connecting rod. Assemble rods to pistons of the left cylinder bank (1, 3, 5, and 7) with indent on piston head on the same side as the large chamfer on the large bore end of the connecting rod.**

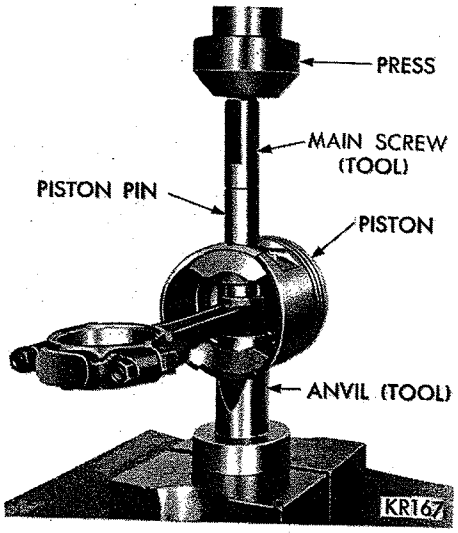


***Fig. 45—Installing Piston Pin Tool C-3684***

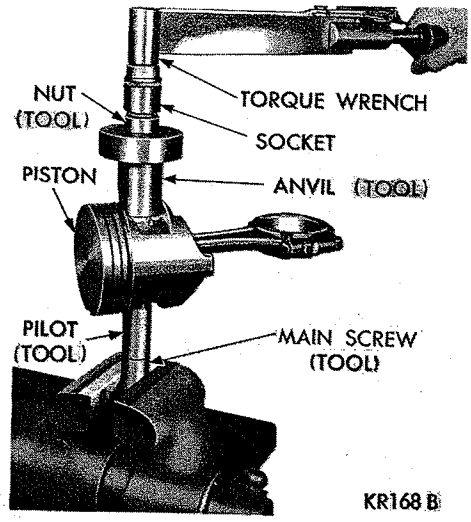


***Fig. 46—Testing Fit of Piston Pin in Connecting Rod Tool C-3684***

(7) Install main screw and piston pin in piston, (Fig. 44).

(8) Install nut on puller screw to hold assembly together. Place assembly on a press (Fig. 45).

(9) Press piston pin in until piston pin "bottoms" on the pilot. This will position pin in connecting rod.

(10) Remove tool and arrange tool parts and piston assembly in same manner (Fig. 42).

(11) Place assembly in a vise (Fig. 46).

(12) Attach torque wrench to nut and tighten up to 15 foot-pounds. If the connecting rod moves downward on piston pin, reject this connecting rod and piston pin combination. Obtain a connecting rod with proper small end bore diameter and repeat the installation and tightening procedure.

(13) If connecting rod does not move under 15 foot-pounds, piston pin and connecting rod interference is satisfactory, remove tool.

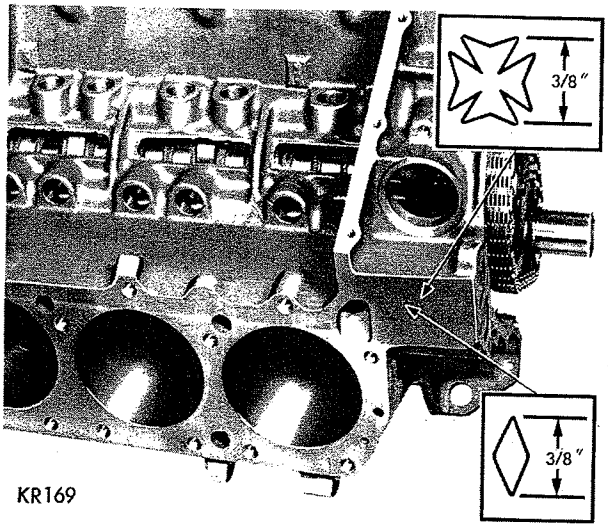


***Fig. 47—Showing Location of External Engine Numbering Pad***

MyMopar.com

## CONNECTING RODS

**IMPORTANT: A Maltese Cross stamped on the engine numbering pad (Fig. 47) indicates that engine is equipped with a crankshaft which has one or more connecting rods and/or main bearing journal finished .001 inch undersize. The position of the undersize journal or journals is stamped on a machine surface of the NO. 3 counterweight (Fig.48). A Maltese Cross with an X indicates .010 inch undersize journals.**

The connecting rod journals are identified by the letter "R" and main bearing journals by the letter "M." For example "M-1" indicates that NO. 1 main bearing is .001 inch undersize.

## INSTALLATION OF CONNECTING ROD BEARINGS

**Fit all rods on one bank until complete. Do not alternate from one bank to another, because when rods are assembled to the pistons correctly, they are not interchangeable from one bank to another.**

Each bearing cap has a small "V" groove across parting face. When installing the lower bearing shell, make certain "V" groove in shell is in line with "V" groove in cap. This allows lubrication of the cylinder wall. The bearings should always be installed so that the small formed tang fits into the machined grooves of the rods. The end clearance should be from .009 to .017 inch (two rods).

Limits of taper or out-of-round on any crankshaft journals should be held to a maximum of .001 inch. Bearings are available in .001, .002, .003, .010 and .012 inch undersize.

**Install the bearings in pairs. Do not use a new bearing half with an old bearing half. Do not file the rods or bearing caps.**

## MEASURING CONNECTING ROD BEARING CLEARANCE

### *Shim Stock Method*

(1) Place an oiled .001 inch brass shim stock (½ inch wide and ¾ inch long) between the bearing and connecting rod journal.

(2) Install bearing cap and tighten to 45 foot-pounds.

(3) Turn connecting rod ¼ turn in each direction. A slight drag should be felt which indicates clearance is satisfactory. Correct clearance is from .0005 to .0015 inch.

(4) Side play should be from .009 to .017 inch.

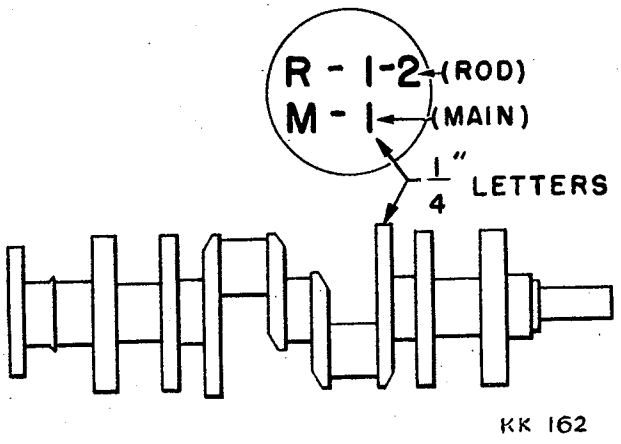


*Fig. 48—Showing Location of Mark of No. 2 Counterweight*

## INSTALLING PISTON AND CONNECTING ROD ASSEMBLY IN CYLINDER BLOCK

(1) Before installing pistons, rods, and rod assemblies in the bore, be sure that the compression ring gaps are staggered so that neither are in line with oil ring rail gaps.

(2) The oil ring expander ends should be positioned toward the outside of the "V" of the engine. The oil ring rail gaps should be positioned opposite each other and above the piston pin holes.

(3) Immerse piston head and rings in clean engine oil, slide ring compressor, Tool C-385, over the piston and tighten with special wrench (part of Tool C-385).

(4) Be sure the position of rings does not change during this operation. Screw connecting rod bolt protector (part of Tool C-3221) on one rod bolt, and insert rod and piston into cylinder bore.

**Rotate crankshaft so connecting rod journal is on center of cylinder bore.**

(5) Attach puller part of Tool C-3221 on the other bolt, and guide the rod over crankshaft journal (Fig. 49).

(6) Tape piston down in cylinder bore, using handle of a hammer. At the same time, guide connecting rod into position on crankpin journal.

(7) The notch or groove on top of piston must be pointing toward front of engine and larger chamfer of connecting rod bore must be installed toward crank pin journal fillet.

(8) Install rod caps, tighten nuts to 45 foot-pounds.

## CRANKSHAFT MAIN JOURNALS

Crankshaft main bearing journals should be in-

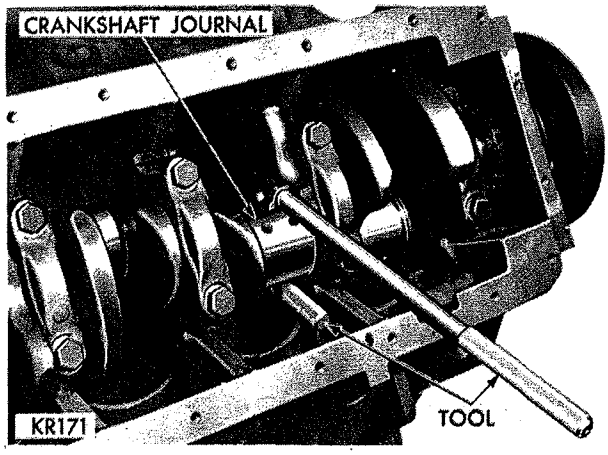


*Fig. 49—Installing Connecting Rod Using Tool C-3221*

MyMopar.com

spected for excessive wear, taper and scoring. Journal grinding should not exceed .012 inch under the standard journal diameter. DO NOT grind the thrust faces of the NO. 3 main bearing. Do not nick crankpin or main bearing fillets. After regrinding, remove rough edges from crankshaft oil holes and clean out all oil passages.

## CRANKSHAFT MAIN BEARINGS

New lower main bearings halves Numbers 1, 2, 4, 5 are interchangeable (Fig. 50). New upper main bearing halves Number 2, 4 and 5 are also interchangeable. Upper and lower bearing halves are not interchangeable because upper bearing is grooved and lower bearing is not.

The NO. 1 upper main bearing IS NOT INTERCHANGEABLE AND IS CHAMFERED on the tab side for timing chain oiling and can be identified by a red marking on edge of bearing.

Upper and lower NO. 3 bearings are flanged to carry the crankshaft thrust loads and are **not interchangeable** with any other bearings in the engine.

**Bearings that are not badly worn or pitted must be reinstalled in the same position.**

Bearing caps are not interchangeable and should be marked at removal to insure correct assembly. Bearings are available in standard and the following undersizes: .001, .002, .003, .010 and .012 inch. Do not install an undersize bearing that will reduce clearance below specifications.

### *Removal*

(1) Remove oil pan and mark bearing caps before removal.

(2) Remove bearing caps one at a time. Remove upper half of bearing by inserting Tool C-3059 (Fig. 51) into oil hole of crankshaft.

(3) Slowly rotate crankshaft clockwise, forcing out upper half of bearing.

### *Installation*

Only one main bearing should be selectively fitted

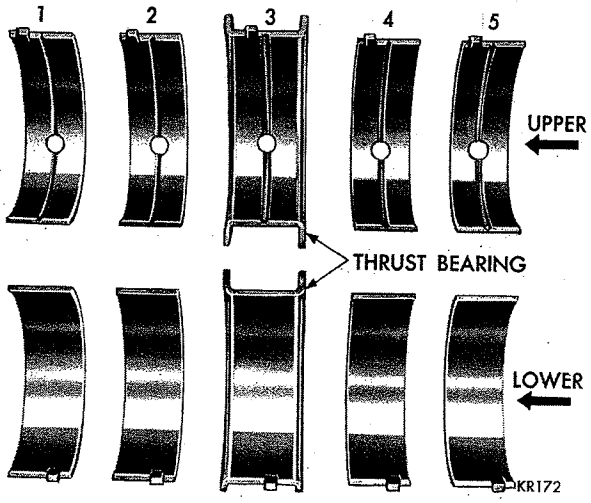


*Fig. 50—Main Bearing Identification*

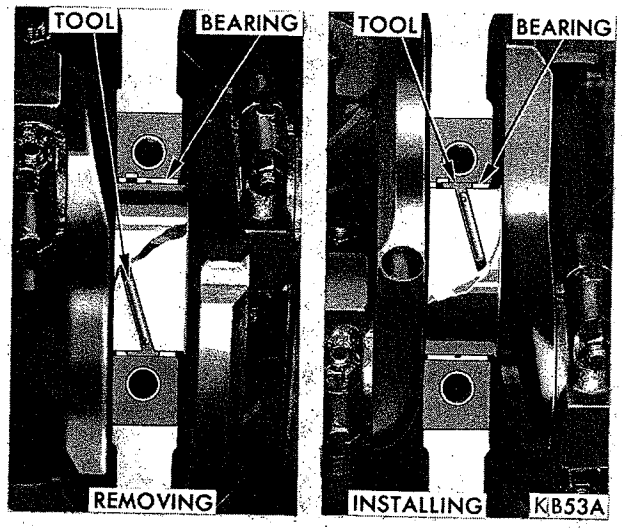


*Fig. 51—Removing or Installing Upper Main Bearing*

while all other main bearing caps are properly torqued.

When installing a new upper bearing shell, slightly chamfer the sharp edges from the plain side.

(1) Start bearing in place, and insert Tool C-3059 into oil hole of crankshaft (Fig. 51).

(2) Slowly rotate crankshaft counter-clockwise sliding the bearing into position. Remove Tool C-3059.

### *Measuring Main Bearing Clearance*

(3) Smooth edges of a ½ x ¾ inch piece of brass shim stock, .001 inch thickness.

(4) Install bearing in center main bearing cap, bearing tang in groove in cap, lubricate bearing and position shim stock across the bearing, install cap, tighten bolts to 85 foot-pounds.

(5) If a slight drag is felt as crankshaft is turned (moved no more than ¼ turn in either direction), clearance is .001 inch or less and is considered satisfactory.

If, however, no drag is felt, the bearing is too large

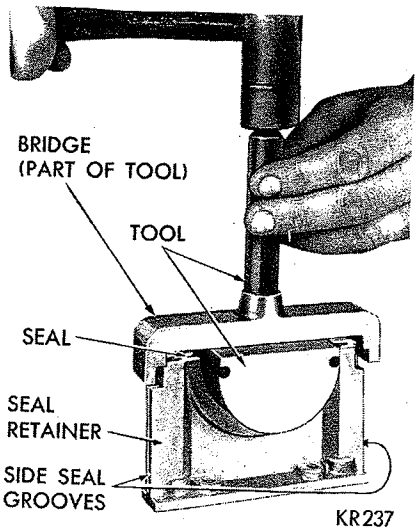


*Fig. 52—Installing Rear Main Bearing Lower Oil Seal*

MyMopar.com

or crankshaft cannot be rotated, bearing is too small and should be replaced with the correct size.

(6) Measure crankshaft end play .002 to .007 inch. If end play is less than .002 inch or more than .007 inch, install a new number 3 main bearing.

(7) Fit remaining bearings in same manner.

It is permissable to use one .001 inch undersize bearing shell with one standard bearing shell or one .002 inch undersize bearing shell with one .001 inch undersize shell. **Always use the smaller diameter bearing half as the upper. Never use an upper bearing half more than .001 inch smaller than the lower bearing half and never use a new bearing half with a used bearing half.**

## REPLACEMENT OF REAR MAIN BEARING OIL SEAL (Crankshaft Removed)

### *Upper Rear Main Seal Installation*

(1) Install a new rear main bearing oil seal in cylinder block so that both ends protrude.

(2) Tap seal down into position, using Tool C-3625 for 361 and 383 Cubic Inch Engines or Tool C-3743 for 426 Cubic Inch Engines, with bridge removed until tool is seated in bearing bore.

(3) Hold the tool in this position and cut off portion of seal that extends above the block on both sides.

### *Lower Rear Main Seal Installation*

(1) Install a new seal in seal retainer so ends protrude (Fig. 52).

(2) Install bridge on tool and tap the seal down into position with Tool C-3625 for 361 and 383 Cubic Inch Engines or Tool C-3743 for 426 Cubic Inch Engines until tool is seated.

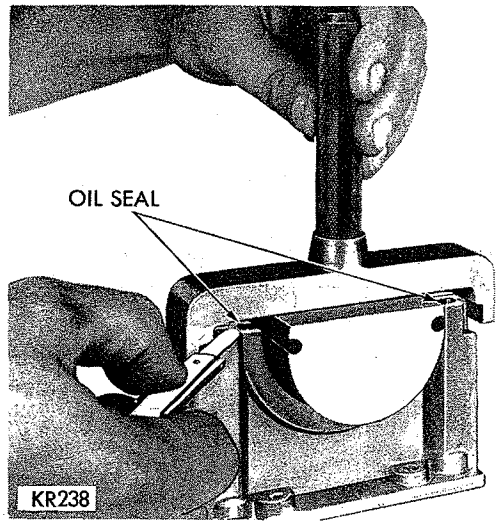


*Fig. 53—Trimming Rear Main Bearing Lower Oil Seal*

(3) Trim off that portion of the seal that protrudes above the cap (Fig. 53).

### *Side Seals Installation*

**Perform the following operations as rapidly as possible. These side seals are made from a material that expands quickly when oiled.**

(1) Apply mineral spirits or diesel fuel to the side seals.

(2) Install seals immediately in the seal retainer grooves.

(3) Install seal retainer and tighten screws to 30 foot-pounds.

**Failure to pre-oil the seals will result in an oil leak.**

# ENGINE OILING SYSTEM

## OIL PAN

### *Removal*

(1) Disconnect battery cable.

(2) Raise vehicle on a hoist and disconnect steering linkage from idler arm and steering arm.

(3) Disconnect exhaust pipe branches from right and left manifolds.

(4) Remove clamp attaching exhaust pipe to extension and remove exhaust pipe.

(5) Drain crankcase oil.

(6) Remove converter dust shield.

(7) Remove oil pan bolts. Turn flywheel until counterweight and connecting rods at front end of crankshaft are at their highest position to provide clearance, and lower the pan. Turn pan counterclockwise to clear oil screen and suction pipe as it is lowered.

### *Installation*

(1) Inspect alignment of oil strainer. The bottom of the strainer must be on a horizontal plane with machined surface of cylinder block. The bottom of the strainer must touch the bottom of oil pan.

(2) Install oil pan.

(3) Install converter dust shield.

(4) Connect exhaust pipe branches to the manifolds and to the exhaust extension and install outlet vent pipe.

(5) Connect steering linkage at idler arm and at pitman arm.

(6) Connect battery cable.

(7) Install drain plug and refill crankcase with the proper grade and quantity of oil.

## OIL PUMP

### *Removal*

Remove oil pump attaching bolts and remove pump and filter assembly from bottom side of engine.

MyMopar.com

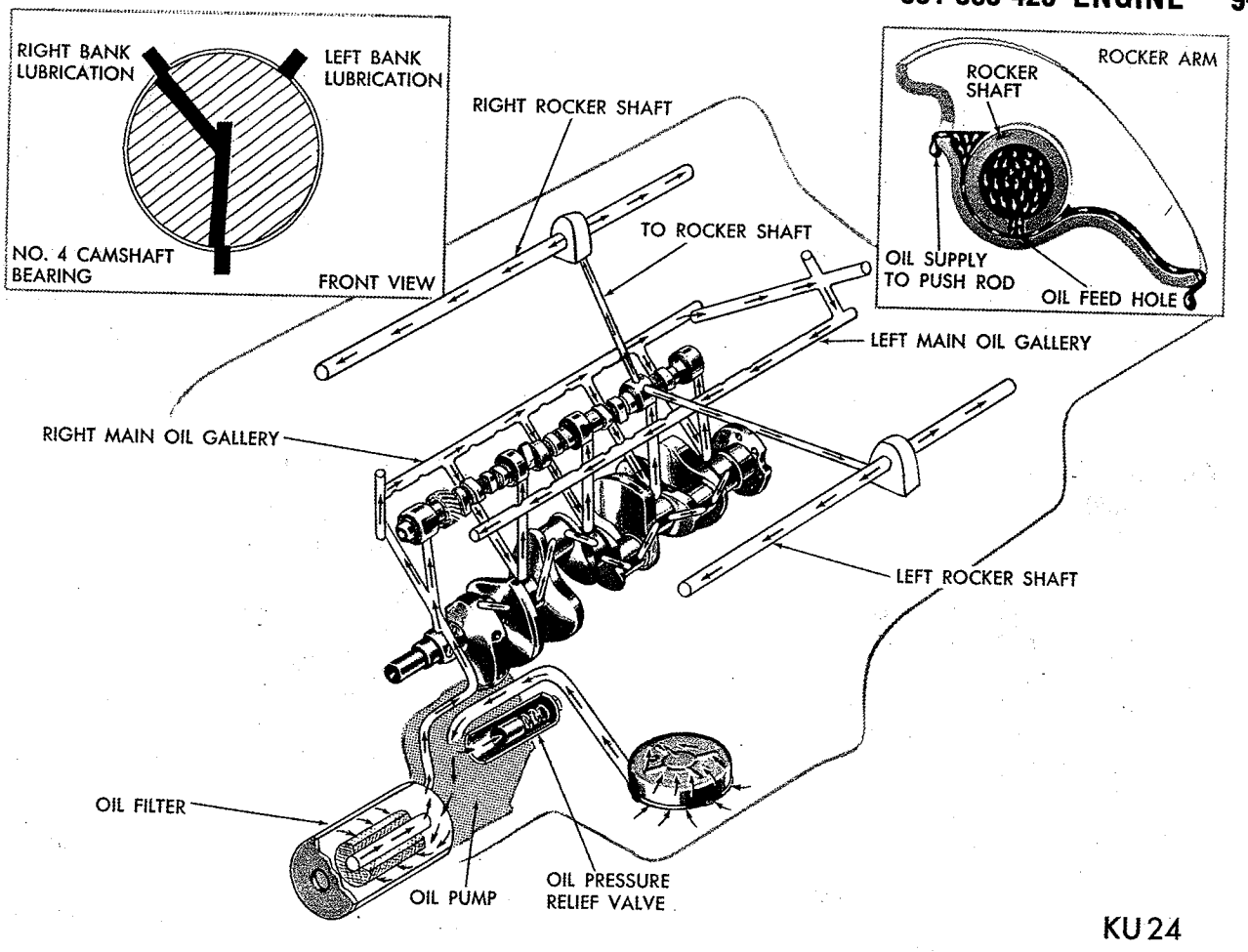


***Fig. 54—Engine Oiling System***

## Disassembly

(1) Remove filter base and oil seal ring.

(2) Remove pump rotor and shaft and lift out outer pump rotor.

(3) Remove the oil pressure relief valve plug and lift out the spring and relief valve plunger (Fig. 55).

## Inspection and Assembly

(1) Clean all parts thoroughly. The mating face of filter base (oil pump cover) should be smooth. Replace filter base if it is scratched or grooved.

(2) Lay a straightedge across oil pump filter base surface (Fig. 56). If a .0015 inch feeler gauge can be inserted between the base and straightedge, filter base should be replaced.

(3) If outer rotor length measures less than .943 inch (Fig. 57) and diameter less than 2.469 inches, replace outer rotor.

(4) If inner rotor length measures less than .942 inch (Fig. 58), a new inner rotor should be installed.

(5) Slide outer rotor and inner rotor into pump body and place a straightedge across the face (between the bolt holes) (Fig. 59).

(6) If a feeler gauge of more than .004 inch can be inserted between the rotor and straightedge replace rotor.

(7) Remove inner rotor and shaft leaving outer rotor in pump cavity.

(8) Press outer rotor body to one side with the fingers and measure the clearance between outer rotor and pump body (Fig. 60).

(9) If measurement is more than .012 inch, replace oil pump body.

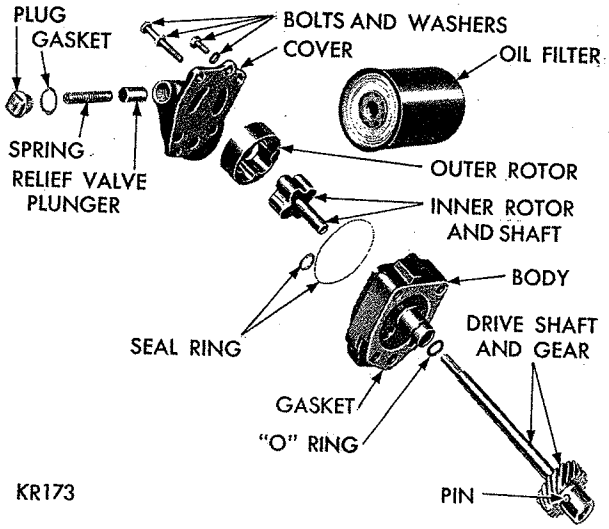


***Fig. 55—Oil Pump and Filter Assembly (Disassembled View)***

MyMopar.com

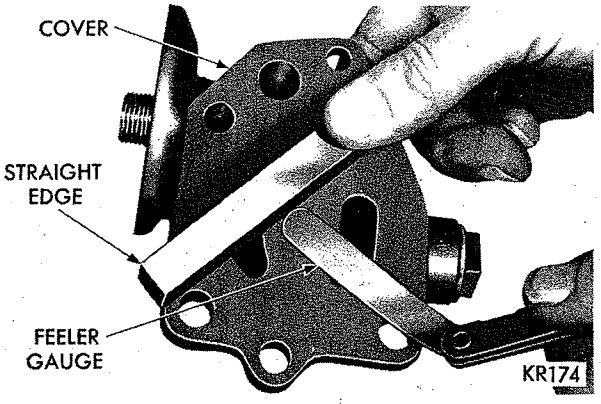


*Fig. 56—Measuring Oil Pump Cover Flatness*

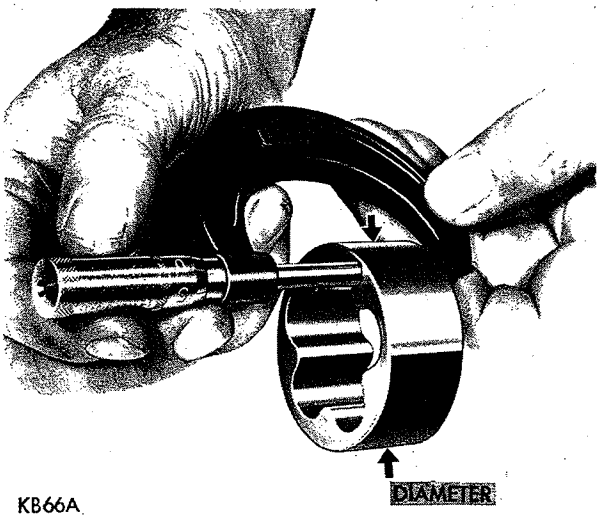


*Fig. 57—Measuring Outer Rotor Thickness*

(10) If the tip clearance between inner and outer rotor (Fig. 61) is more than .010 inch, replace inner and outer rotors.

### Servicing Oil Pressure Relief Valve

Inspect oil pump relief valve plunger for scoring and free operation in its bore. Small scores may be removed with 400 grit wet or dry paper providing extreme care is used not to round off the sharp edge portion of the valve.

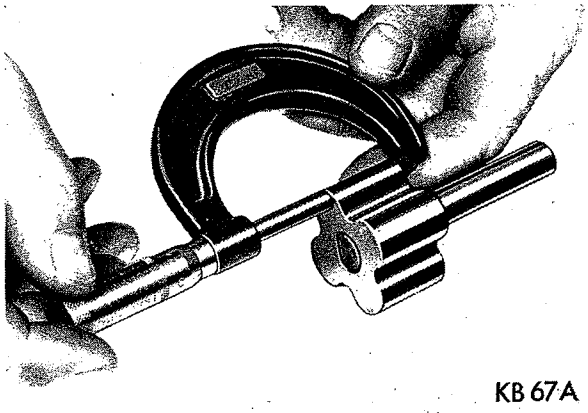


*Fig. 58—Measuring Inner Rotor Thickness*

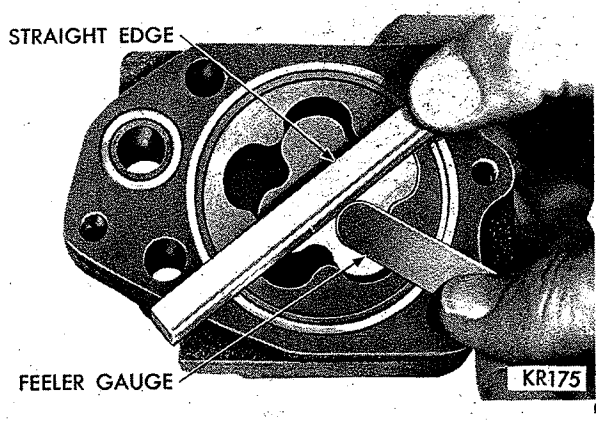


*Fig. 59—Measuring Clearance Over Rotors*

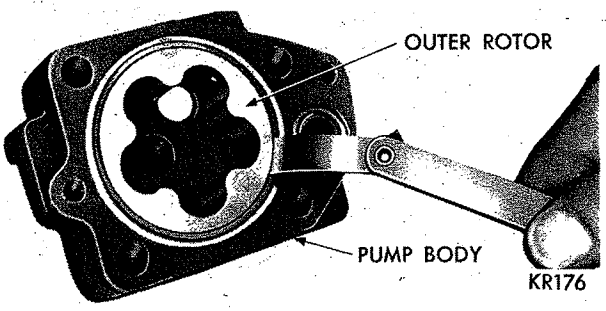


*Fig. 60—Measuring Outer Rotor Clearance*

The relief valve spring has a free length of 2-9/32 to 2-19/64 inch and is red in color.

If the oil pressure is low, inspect for worn bearings, or look for other causes of possible loss of oil pressure. **When assembling the oil pump, be sure to use new oil seal rings between filter base and pump body.**

### Installation

(1) Install a new "O" ring seal on the pilot of oil pump before attaching oil pump to cylinder block.

(2) Install oil pump on engine, using a new gasket on engine and tighten attaching bolts to 35 foot-pounds. Install oil filter element.

## OIL FILTER REPLACEMENT

The "spin on" oil filter should be replaced preferably to coincide with every second oil change.

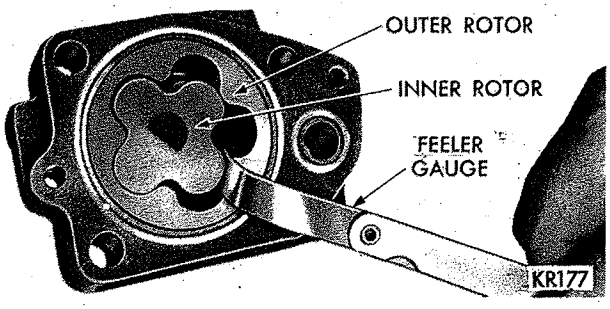


*Fig. 61—Measuring Clearance Between Rotors*

MyMopar.com

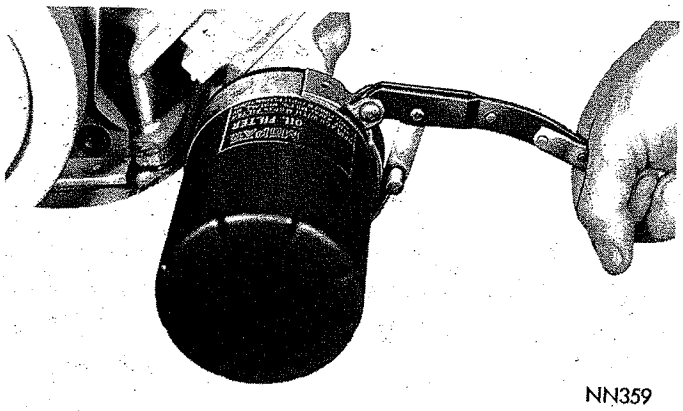


*Fig. 62—Removing Oil Filter*

### *Removal*

**Use care so as not to damage tranmission oil cooler lines.**

(1) Using Tool C-3845 unscrew the filter from the base on bottom side of engine and discard.

(2) Wipe base clean.

### *Installation*

(1) Install the "spin" oil filter by hand, finger tight. Do not use tool.

(2) To obtain an effective seal, tighten filters by hand the additional number of turns indicated on the replacement filter. Start engine and inspect for leaks.

## CRANKCASE VENTILATION SYSTEM

### GENERAL INFORMATION

All models are equipped with a positive crankcase ventilation system consisting of a crankcase ventilator valve and cap mounted on the cylinder head cover, a special carburetor with a hose fitting in its base, and a hose connecting the ventilator valve to the carburetor base fitting. The oil filler cap provides the air inlet for the system. The air drawn into the oil filler cap is circulated through the engine, and drawn out of the cylinder head cover by manifold vacuum into the combustion chambers and dispelled with the exhaust gases (Fig. 1).

### SERVICE PROCEDURES

The system must be kept clean to maintain good engine performance durability as deposits will accumulate in the valve, hoses, and the carburetor parts, therefore, the ventilation system should be inspected at least every six months and the valve replaced once a year preferable to coincide with the annual engine performance evaluation. This service will be required more frequently if the vehicle is used extensively for short trips—driving less than 10 miles—with frequent idling, such as city traffic.

With the engine running at idle, remove the ventilator valve and cap assembly from the rocker cover. If valve is not plugged, a hissing noise will usually be heard as air passes through the valve and a strong vacuum should be felt when a finger is placed over the valve inlet. Replace the ventilator valve and cap assembly and remove the inlet breather cap. With engine still running at idle, loosely hold a piece of stiff paper or a parts tag over the oil fill pipe. Within a few seconds, it should be sucked against the oil fill

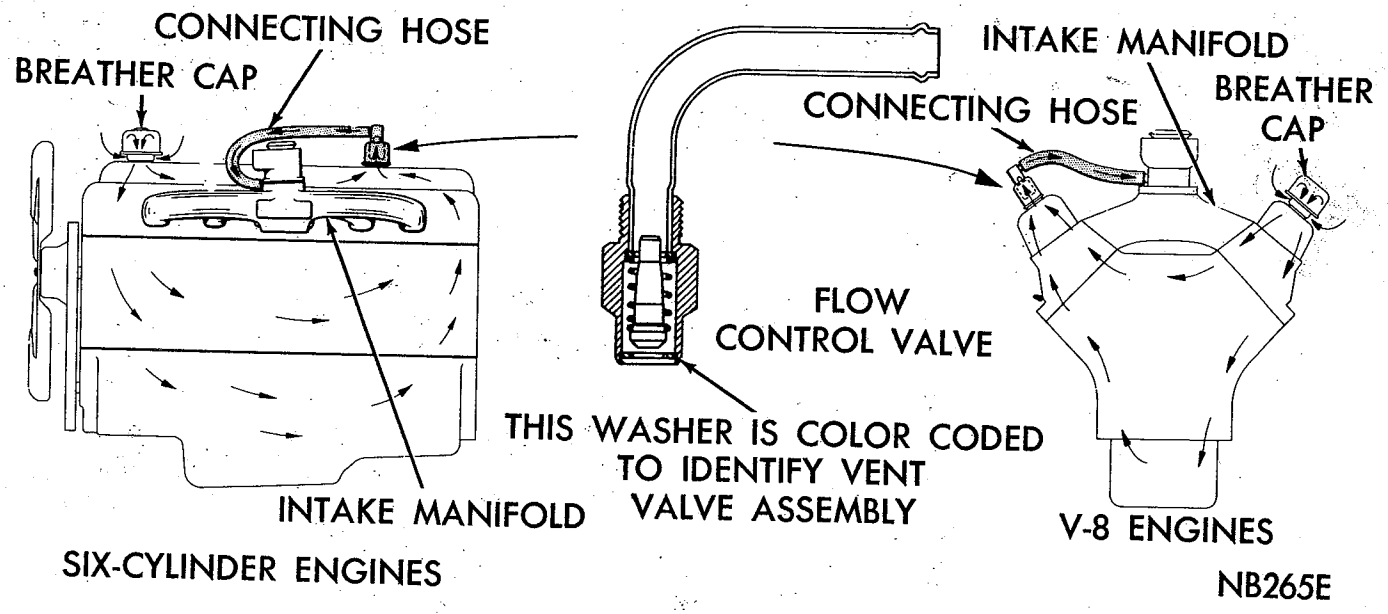


*Fig. 1—Crankcase Ventilation System*

MyMopar.com

pipe with a holding force. If this occurs, a final test should be made to be certain the valve shuttle is free. A clicking noise should be heard when the valve is shaken (engine not running). If the noise is heard, the unit is functioning satisfactory and no further service is necessary.

If the valve does not click when shaken or if the paper is not sucked against fill pipe, valve should be replaced and system retested. (Do not attempt to clean the valve.) The 170 cubic inch engine Mopar Ventilator Valve is identified by a white end washer. On all other engines (except 170 cubic inch engine) the Mopar Ventilator Valve is identified by a black-end washer. With a new valve installed, if the vacuum can be felt with the engine idling, the system is satisfactory. If the vacuum cannot be felt, it will be necessary to clean the ventilator hose and the passages in the lower part of the carburetor. The carburetor must be removed, hand turn a ¼ inch drill through the passages to dislodge the solid particles. Blow clean.

**Use a smaller drill if necessary as no metal is to be removed. It is not necessary to disassemble carburetor for this service.**

## CLOSED CRANKCASE VENTILATION SYSTEM FOR STATE OF CALIFORNIA

### GENERAL INFORMATION

A fully closed crankcase ventilation system (Fig. 2) is installed on vehicles built for sale in the State of California and as extra equipment in other states. This fully-closed crankcase system has a closed oil filler cap with a hose connecting the filler cap to the carburetor air cleaner housing.

The air drawn from the carburetor air cleaner through the connecting hose to the filler cap, is circulated through the engine and drawn out of the cylinder head cover by manifold vacuum; through another connecting hose to the carburetor base, into the combustion chamber, and dispelled with the exhaust gases (Fig. 2).

On all California vehicles a new outer wrapper is used on the outside of the air cleaner element except **High Performance Engines with non-silenced air cleaners.** Vehicles **not** equipped with air cleaner element wrapper must be serviced more frequently than the ones with the wrapper.

### SERVICE PROCEDURES

The system must be kept clean to maintain good engine performance and durability as deposits will accumulate in the valve, hose and the carburetor parts, therefore, the ventilation system should be inspected, at every crankcase oil change and the valve replaced once a year preferable to coincide with the annual engine performance evaluation. This service will be required more frequently if the vehicle is used extensively for short trips—driving less than 10 miles with frequent idling, such as city traffic.

With the engine running at idle, remove the ventilator valve and cap assembly from the rocker cover. If valve is not plugged, a hissing noise will usually be heard as air passes through the valve and a strong vacuum should be felt when a finger is placed over the valve inlet. Replace the ventilator valve and cap assembly and remove the oil filter cap. With engine still running at idle, loosely hold a piece of stiff paper

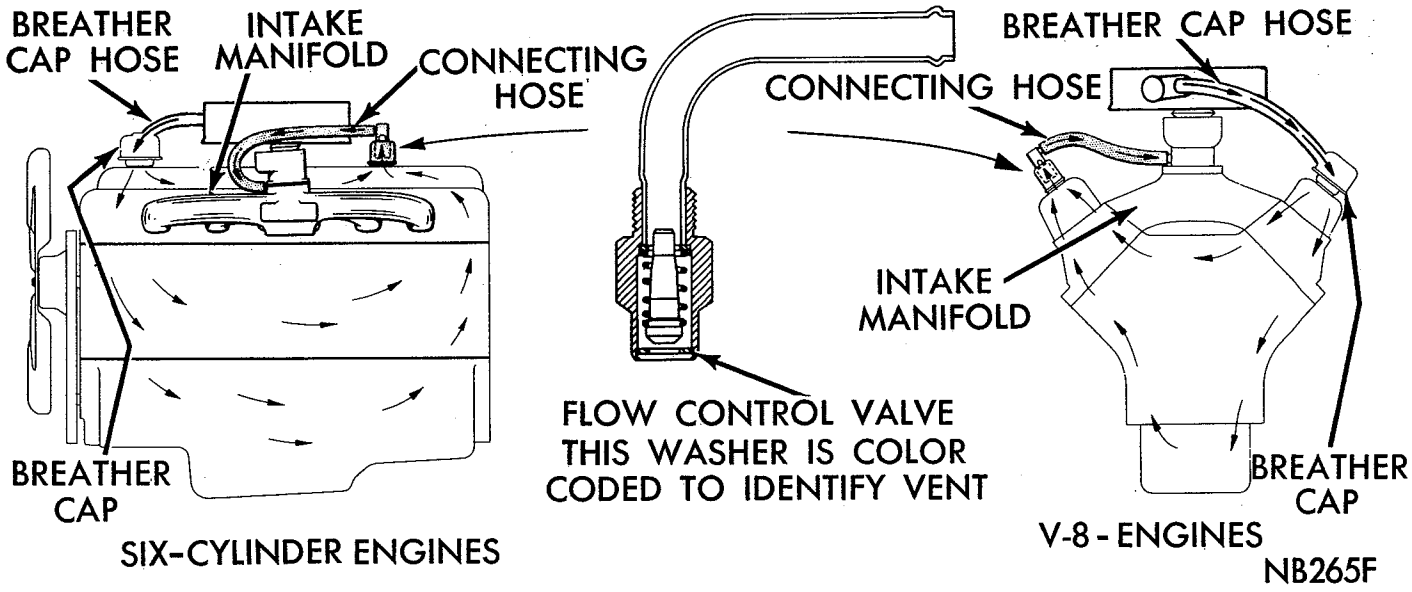


*Fig. 2—California Closed Ventilation System*

MyMopar.com

or a parts tag over the fill pipe. Within a few seconds, it should be sucked against the oil fill pipe with a holding force. If this occurs, a final test should be made to be certain the valve shuttle is free. A clicking noise should be heard when the valve is shaken (engine not running). If the noise is heard, the unit is functioning satisfactory and no further service is necessary.

If the valve does not click when shaken or if the paper is not sucked against fill pipe, valve should be replaced and system retested. (Do not attempt to clean the valve.) The 170 cubic inch engine Mopar Ventilator Valve is identified by a white end washer. On all other engines, the Mopar Ventilator Valve is identified by a black end washer. With a new valve installed, if the vacuum can be felt with the engine idling, the system is satisfactory. If the vacuum cannot be felt, it will be necessary to clean the ventilator hose and the passages in the lower part of the carburetor. The carburetor must be removed, hand turn a ¼ inch drill through the passages to dislodge the solid particles. Blow clean.

**Use a smaller drill if necessary as no metal is to be removed. It is not necessary to disassemble carburetor for this service.**

## CARBURETOR AIR CLEANER

### *(With Wrapper Air Cleaner)*

The paper element carburetor air cleaner should be inspected and cleaned every six months, and replaced every two years with wrapper.

To clean the filter element, it should be removed from its container. Remove wrapper from element. Wash wrapper in kerosene or similar solvent to remove oil and dirt. Shake or blot dry. Gently blow out dirt from the element with compressed air. Air Nozzle should be held about two inches from the inside screen. Clean metal housing, install wrapper on element and reinstall element. Use a new Mopar Filter Element for replacement. These services will be required more frequently if vehicle is used extensively for short trips with frequent idling.

### *(Without Wrapper Air Cleaner)*

The paper air cleaner element should be inspected every crankcase oil change and replaced every year.

Remove carburetor air cleaner element from its container. If paper element is dry and with only one or two oil wetted spots, clean by blowing gently with compressed air, holding air nozzle about two inches from inside screen. If element is saturated with oil, install a new element.

**Whenever oil wetting of the paper element is observed. THE CRANKCASE ventilator valve and associated parts should be checked for excessive deposit build-up or plugging.**

Clean the metal housing and reinstall element. These services will be required more frequently if vehicle is used extensively for short trips with frequent idling.

## REPAIR OF DAMAGED OR WORN THREADS

Damaged or worn threads can be repaired by the use of Heli-Coils. Essentially, this repair consists of drilling out worn or damaged threads, tapping the hole with a special Heli-Coil Tape, and installing a Heli-Coil Insert into the tapped holes. This brings the hole back to its original thread size (See Fig. 3).

The following chart lists the threaded hole sizes which are used in the engine block and the necessary tools and inserts for the repair of damaged or worn thread. Heli-Coil tools and inserts are readily available from automotive parts jobbers.

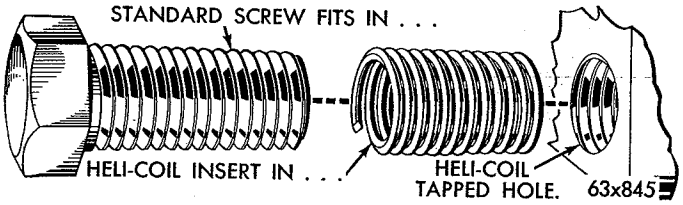


***Fig. 3—Heli-Coil Installation***

| HELI-COIL INSERT | | | DRILL | TAP | INSERTING TOOL | EXTRACTING TOOL |
|---|---|---|---|---|---|---|
| Thread Size | Part No. | Insert Length | Size | Part No. | Part No. | Part No. |
| ½-20 | 1185-4 | ⅜″ | 17/64(.266) | 4 CPB | 528-4N | 1227-6 |
| 5/16-18 | 1185-5 | 15/32″ | Q(.332) | 5 CPB | 528-5N | 1227-6 |
| ⅜-16 | 1185-6 | 9/16″ | X(.397) | 6 CPB | 528-6N | 1227-6 |
| 7/16-14 | 1185-7 | 21/32″ | 29/64(.453) | 7 CPB | 528-7N | 1227-16 |
| ½-13 | 1185-8 | ¾″ | 33/64(.516) | 8 CPB | 528-8N | 1227-16 |

# SPECIFICATIONS

## SIX CYLINDER ENGINE

| | |
|---|---|
| 170-225 Cubic Inch Engines | |
| Type | In-Line OHV |
| Number of Cylinders | 6 |
| Bore | 3.40″ |

MyMopar.com

| | |
|---|---|
| Stroke—170 Cubic Inch | 3.125″ |
| 225 Cubic Inch | 4.125″ |
| Piston Displacement | 170—225 Cu. In. |
| Compression Ratio—170 Cubic Inch | 8.50 to 1 |
| 225 Cubic Inch | 8.40 to 1 |
| Compression Pressure with Engine Warm, Spark Plugs Removed, Wide Open Throttle | 110—140 psi |
| Maximum Variation Between Cylinders (any one engine) | 20 psi |
| Firing Order | 1-5-3-6-2-4 |
| Basic Timing | 2½° B.T.D.C. |
| With C.A.P. | 5° A.T.C. |
| **CRANKSHAFT** | |
| Type | Fully Counter-Balanced |
| Bearings | Steel-Backed Babbitt |
| Main Bearing Journal Diameter | 2.7495 to 2.7505″ |
| Connecting Rod Journal Diameter | 2.1865 to 2.1875″ |
| Maximum Out-of-Round Permissible | .001″ |
| Number Main Bearings | 4 |
| Clearance Desired | .0005 to .0015″ |
| Maximum Clearance Allowance Before Reconditioning | .0025″ |
| End Play | .002″ to .007″ |
| Thrust Taken by | No. 3 Main Bearing |
| Finish at Rear Seal Surface | Diagonal Knurling |
| Interchangeability of Bearings | Upper Nos. 2, 4<br>Lower Nos. 1, 2, 4 |
| **MAIN BEARINGS (service)** | |
| All available in Standard and the following Undersizes | .001, .002, .003, .010, .012″ |
| **CONNECTING RODS AND BEARINGS** | |
| Type | Drop Forged "I" Beam |
| Length (Center to Center) | 170—5.705 to 5.709″<br>225—6.697 to 6.701″ |
| Weight (Less Bearing Shells) | 170—25.3 oz.<br>225—26.8 oz. |
| Bearings | Steel-Backed Babbitt |
| Diameter and Length | 2.1870 x 1.015″ |
| Clearance Desired | .0005 to .0015″ |
| Maximum Allowable before Reconditioning | .0025″ |
| Side Clearance | .006 to .012″ |
| Bearings for Service | Standard .001, .002, .003, .010, .012″ U.S. |
| Piston Pin Bore Diameter | .8995 to .9000″ |
| **CAMSHAFT** | |
| Drive | Chain |
| Bearings | Steel-Backed Babbitt |
| Number | 4 |
| Thrust Taken by | Cylinder Block |
| Clearance | .001 to .003″ |
| Maximum Allowable Before Reconditioning | .005″ |
| **CAMSHAFT BEARING JOURNALS** | |
| Diameter | |
| No. 1 | 1.998 to 1.999″ |
| No. 2 | 1.982 to 1.983″ |
| No. 3 | 1.967 to 1.968″ |
| No. 4 | 1.951 to 1.952″ |
| **CAMSHAFT BEARINGS** | |
| Diameter (after reaming) | |
| No. 1 | 2.000 to 2.001″ |
| No. 2 | 1.984 to 1.985″ |
| No. 3 | 1.969 to 1.970″ |
| No. 4 | 1.953 to 1.954″ |
| **TIMING CHAIN** | |
| Number of Links | 50 |
| Pitch | .50″ |
| Width | .88″ |
| **TAPPETS** | |
| Type | Mechanical |

MyMopar.com

| | | |
|---|---|---|
| Clearance in Block | | .0012 to .0025″ |
| Body Diameter | | .9040 to .9045″ |
| Clearance Between Valve Stem and Rocker Arm Pad (Engine Hot) | | .010″ Intake<br>.020″ Exhaust |
| **PISTONS** | | |
| Type | | Horizontal Slot w/Steel Struts |
| Material | | Aluminum Alloy Tin Coated |
| Land Clearance (diametral) | | .024 to .031″ |
| Clearance at Top of Skirt | | .0005 to .0015″ |
| Weight (std. through .040 oversize) | | 16 oz. |
| Piston Length (overall) | | 3.51″ |
| Ring Groove Depth | | |
| No. 1 | | .179″ |
| No. 2 | | .179″ |
| No. 3 | | .181″ |
| Pistons for Service | | Std. .005, .020, .040″ O.S. |
| **PISTON PINS** | | |
| Type | | Press Fit in Rod |
| Diameter | | .9007—.9009″ |
| Length | | 2.955—2.976″ |
| Clearance in Piston | | .00045 to .00075″ |
| Interference in Rod | | .0007 to .0012″ |
| Piston Pins for Service | | Standard Only |
| Direction Offset in Piston | | Toward Right Side of Engine |
| **PISTON RINGS** | 225 Cubic Inch | 170 Cubic Inch |
| Number of Rings per Piston | 3 | 3 |
| Compression | 2 | 2 |
| Oil | 1 | 1 |
| Oil Ring Type | 3-piece steel rail chrome-face | Cast iron with expander |
| Ring Width | | |
| Compression | .0775″-.0780″ | .0775″-.0780″ |
| Oil—Cast iron | | .1860″-.1865″ |
| Steel rails | .025″ | |
| Ring Gap | | |
| Compression | .010″-.020″ | .010″-.020″ |
| Oil—Cast iron | | .010″-.020″ |
| Steel rails | .015″-.055″ | |
| Ring Side Clearance | | |
| Compression | .0015″-.0030″ | .0015″-.0030″ |
| Oil—Cast iron | | .0015″-.0030″ |
| Steel rails | .0002″-.005″ | |
| Service Rings | | |
| Ring Gap | | |
| Compression | .010″-.047″ | .010″-.047″ |
| Oil (Steel rails) Cast Iron not available | .015″-.062″ | .015″-.062″ |
| Ring Side Clearance | | |
| Compression | .0015″-.004″ | .0015″-.004″ |
| Oil (Steel rails) Cast Iron not available | .0002″-.005″ | .0002″-.005″ |
| **VALVES—Intake** | | |
| Material | | Carbon Manganese Steel |
| Head Diameter | | 1.615—1.625″ |
| Length (to gauge dim. Line) | | 4.6878—4.7028″ |
| Stem Diameter | | .372 to .373″ |
| Stem to Guide Clearance | | .001 to .003″ |
| Maximum Allowable Before Reconditioning | | .017″* |
| Valve Face Angle | | 45° |
| Adjustment | | Rocker Arm Screw |
| Lift | 170 cu. in. | .375″ |
| | 225 cu. in. | .395″ |
| **VALVES—Exhaust** | | |
| Material | | Nitrogen Treated Manganese Chromium Nickel Steel |
| Head Diameter | | 1.355—1.365″ |
| Length (to gauge dim. Line) | | 4.6878—4.7028″ |

MyMopar.com

| | | |
|---|---|---|
| Stem Diameter | | .371 to .372″ |
| Stem to Guide Clearance | | .002 to .004″ |
| Maximum Allowable Before Reconditioning | | .017″* |
| Valve Face Angle | | 47° |
| Adjustment | | Rocker Arm Screw |
| Lift | 170 cu. in. | .365″ |
| | 225 cu. in. | .395″ |
| VALVE SPRINGS | | |
| Number | | 12 |
| Free Length | | 1.92″ |
| Load when Compressed to (valve closed) | | 49—57 lbs. @ 1-11/16″ |
| Load when Compressed to (valve open) | | 137/150 lbs. @ 1-5/16″ |
| Valve Springs I.D. | | 1.010 to 1.030″ |
| Valve Spring Installed Height (spring seat to retainer) | | 1⅝-1-11/16″ |
| Use 1/16 inch spacer to reduce spring height when over specifications | | |
| CYLINDER HEAD | | |
| Combustion Chamber | | Wedge Type |
| Valve Seat Run-Out (maximum) | | .002″ |
| Intake Valve Seat Angle | | 45° |
| Seat Width (finished) | | .070 to .090″ |
| Exhaust Valve Seat Angle | | 45° |
| Seat Width (finished) | | .040 to .060″ |
| Cylinder Head Gasket Compressed (thickness) | | .022″ |
| CYLINDER BLOCK | | |
| Cylinder Bore (standard) | | 3.4000″ |
| Cylinder Bore Out-of-Round (Max. allowable before reconditioning) | | .005″ |
| Cylinder Bore Taper (Max. allowable before reconditioning) | | .010″ |
| Reconditioning Working Limits (for taper and out-of-round) | | .001″ |
| Maximum Allowable Oversize Cylinder Bore | | .040″ |
| Tappet Bore Diameter | | .9050—.9058″ |
| Distributor Lower Drive Shaft Bushing (press fit in block) | | .0005—.0040″ |
| Ream to | | .4865—.4880″ |
| Shaft to Bushing Clearance | | .0007—.0027″ |
| ENGINE LUBRICATION | | |
| Pump Type | | Rotary, Full Pressure |
| Capacity (qts.) | | 4** |
| Pump Drive | | Camshaft |
| Operating Pressure at 1000 RPM | | 45 to 60 lbs. |
| Pressure Drop Resulting from Clogged Filter | | 7 to 9 lbs. |
| OIL FILTER | | |
| Type | | Full Flow |
| Spin On | | Replaceable |

## OIL PUMP—INSPECTION LIMITS FOR REPLACEMENT

| | |
|---|---|
| Oil Pump Cover | .0015 inch or more |
| Outer Rotor Length | .649 inch or more |
| Outer Rotor Diameter | 2.469 inch or less |
| Inner Rotor Length | .649 inch or less |
| Clearance Over Rotors—Outer | .004 inch or more |
| Inner | .004 inch or more |
| Outer Rotor Clearance | .012 inch |
| Tip Clearance Between Rotors | .010 inch or more |

*With tools C-3973 and C-3339 using wobble method.
**When Filter Element is Replaced, Add 1 qt.

## OVERSIZE AND UNDERSIZE ENGINE COMPONENT MARKINGS

| Engine Displacement | Condition | Identification | Location of Identification |
|---|---|---|---|
| 170 cu. in.<br>225 cu. in. | .001″ U/S Crankshaft | Maltese Cross<br>M-2-3 etc. (indicating No. 2 & 3 main bearing journal)<br>and/or | Top of front pad—Right side of block<br><br>Crankshaft counterweight |

MyMopar.com

| | | |
|---|---|---|
| | R-1-4 etc. (indicating No. 1 & 4 connecting rod journals) | |
| .001" U/S Crankshaft | Maltese Cross and X | Top of front pad—Right side of block |
| | M-10 (indicates .010" U/S all main journals) and/or R-10 (indicates .010" U/S all rod journals) | Crankshaft counterweight |
| .020" O/S Cylinder Bores | A | Top of front pad—Right side of block |
| .008" O/S Tappets | ♦ | Top of front pad—Right side of block |

## 8-CYLINDER ENGINES

| | | |
|---|---|---|
| ENGINE | | |
| Type | "273" | "318" |
| Number of Cylinders | 90°V | 90°V |
| Bore | 8 | 8 |
| Stroke | 3.625" | 3.91" |
| Piston Displacement | 3.31" | 3.31" |
| Compression Ratio | 273 cu. in. | 318 cu. in. |
| | 9.0 to 1* | 9.0 to 1 |
| | 10.5 to 1** | |
| Compression Pressure with engine warm spark plugs removed—wide open throttle | 120-150 psi* | 125-155 psi |
| | 130-165 psi** | |
| Maximum variation between cylinders (any one Engine) | 20 psi* | 25 psi |
| | 25 psi* | |
| Firing Order | 1-8-4-3-6-5-7-2 | 1-8-4-3-6-5-7-2 |
| Basic Timing | 10° B.T.C.* | 10° B.T.C. Automatic |
| | 5° B.T.C.** | 5° B.T.C. Manual |
| All with C.A.P. | 5° A.T.C. | 5° A.T.C. |
| CYLINDER NUMBERING (front to rear) | | |
| Left Bank | 1-3-5-7 | 1-3-5-7 |
| Right Bank | 2-4-6-8 | 2-4-6-8 |
| CYLINDER BLOCK | | |
| Cylinder Bore (standard) | 3.625"-3.6270" | 3.910"-3.912" |
| Cylinder Bore Out-of-Round (Max. allowable before reconditioning) | .005" | .005" |
| Cylinder Bore Taper (Max. allowable before reconditioning) | .010" | .010" |
| Reconditioning Working Limits (for taper and out-of-round) | .001" | .001" |
| Maximum Allowable Oversize (cylinder bore) | .040" | .040" |
| Tappet Bore Diameter | .9050"-9058" | .9050"-.9058" |
| Distributor Lower Drive Shaft Bushings (press fit in block) | .0005"-.0040" | .0005"-.0040" |
| Ream to | .4865"-.4880" | .4865"-.4880" |
| Shaft to Bushing Clearance | .0007"-.0027" | .0007"-.0027" |
| PISTONS | | |
| Type Material | Autothermic Alloy Tin Coated | Aluminum—Alloy Tin Coated |
| Clearance in Bore (with .0015 x ½" feeler stock) | 5-10 lbs. Pull | 5-10 lbs. Pull |
| Land Clearance (diametral) | .029"-.034" | .029"-.034" |
| Clearance at Top of Skirt | .0005"-.0015" | .0005"-.0015" |
| Weight (Std. through .040" oversize) | 530 gms.* | 592 gms. |
| | 569 gms.** | |
| Piston Length (overall) | 3.19" | 3.21" |
| Ring Groove Depth | | |

MyMopar.com

| | | |
|---|---|---|
| No. 1 | .189" | .205" |
| No. 2 | .189" | .205" |
| No. 3 | .187" | .198" |
| Pistons for Service | Std. .005", .020", .040" Oversize | Std. .005", .020", .040" Oversize |
| **PISTON PINS** | | |
| Type | Full Floating | Full Floating |
| Diameter | .9841"-.9843" | .9841"-.9843" |
| Length | 2.810"-2.820" | 2.990"-3.000" |
| Clearance in Piston (Light Thumb Push @ 70°F.) | .0000"-.0005" | .0000"-.0005" |
| End Play | .004"-.026" | .004"-.026" |
| Clearance in Rod | .0000"-.0005" | .0000"-.0005" |
| Pins for Service | Std. .003", .008" Oversize | Std. .003", .008" Oversize |
| **PISTON RINGS** | | |
| Number of Rings per Piston | 3 | 3 |
| Compression | 2 | 2 |
| Oil | 1 | 1 |
| Oil Ring Type | 3-piece steel rail chrome-face | Cast iron with expander |
| Ring Width | | |
| Compression | .0775"-.0780" | .0775"-.0780" |
| Oil—Cast iron | | .1860"-.1865" |
| Steel rails | .025" | |
| Ring Gap | | |
| Compression | .010"-.020" | .010"-.020" |
| Oil—Cast iron | | .010"-.020" |
| Steel rails | .015"-.055" | |
| Ring Side Clearance | | |
| Compression | .0015"-.0030" | .0015"-.0030" |
| Oil—Cast iron | | .0015"-.0030" |
| Steel rails | .0002"-.005" | |
| Service Rings | | |
| Ring Gap | | |
| Compression | .010"-.020" | .010"-.020" |
| Oil (Steel rails) Cast Iron not available | .015"-.062" | .015"-.062" |
| Ring Side Clearance | | |
| Compression | .0015"-.004" | .0015"-.004" |
| Oil (Steel rails) Cast Iron not available | .0002"-.005" | .0002"-.005" |
| **CONNECTING RODS** | | |
| Length (Center to Center) | 6.123" | 6.123" |
| Weight (less bearing shells) | 726 gms. | 726 gms. |
| Side Clearance (two rods) | .006"-.014" | .006"-.014" |
| Piston Pin Bore Diameter | 1.027"-1.039" | 1.027"-1.039" |
| **CONNECTING ROD BUSHING** | | |
| Type | Steel Backed Bronze | Steel Backed Bronze |
| **CONNECTING ROD BEARINGS (Type)** | Steel Backed Grid Type | Steel Backed Grid Type |
| Diameter and Width | 2.126" x .842" | 2.126" x .842" |
| Clearance desired | .0005"-.0015" | .0005"-.0015" |
| Maximum Allowable | .0025" | .0025" |
| Bearings for Service | Std., .001", .002" .003", .010", .012" | Std., .001", .002" .003", .010", .012" |
| **CRANKSHAFT** | | |
| Type | Fully Counter-Balanced | Fully Counter-Balanced |
| Bearings | Steel Backed Babbitt | Steel Backed Babbitt |
| Thrust Taken By | No. 3 Main Bearing | No. 3 Main Bearing |
| End Play | .002"-.007" | .002"-.007" |
| Maximum Allowable | .010" | .010" |
| Diametral Clearance Desired | .0005"-.0015" | .0005"-.0015" |
| Diametral Clearance Allowed | .0025" | .0025" |
| Finish at Rear Oil Seal Surface | Diagonal Knurling | Diagonal Knurling |
| **MAIN BEARING JOURNALS** | | |
| Diameter | 2.4995"-2.5005" | 2.4995"-2.5005" |
| Maximum Allowable Out-of-Round and/or Taper | .001" | .001" |

MyMopar.com

| | | | |
|---|---|---|---|
| Bearings for Service Available in Standard and the following undersizes | | .001", .002", .003", .010", .012" | .001", .002", .003", .010", .012" |
| CONNECTING ROD JOURNALS | | | |
| Diameter | | 2.124"-2.125" | 2.124"-2.125" |
| Maximum Allowable Out-of-Round and/or Taper | | .001" | .001" |
| CAMSHAFT | | | |
| Drive | | Chain | Chain |
| Bearings | | Steel Backed Babbitt | Steel Backed Babbitt |
| Number | | 5 | 5 |
| Diametral Clearance | | .001"-.003" | .001"-.003" |
| Maximum Allowable before Reconditioning | | .005" | .005" |
| Thrust Taken By | | Thrust Plate | Thrust Plate |
| End Play | | .002"-.006" | .002"-.006" |
| Maximum Allowable | | .010" | .010" |
| CAMSHAFT JOURNALS | | | |
| Diameter | No. 1 | 1.998"-1.999" | 1.998"-1.999" |
| | No. 2 | 1.982"-1.983" | 1.982"-1.983" |
| | No. 3 | 1.967"-1.968" | 1.967"-1.968" |
| | No. 4 | 1.951"-1.952" | 1.951"-1.952" |
| | No. 5 | 1.5605"-1.5615" | 1.5605"-1.5615" |
| CAMSHAFT BEARINGS | | | |
| Diameter | No. 1 | 2.000"-2.001" | 2.000"-2.001" |
| | No. 2 | 1.984"-1.985" | 1.984"-1.985" |
| | No. 3 | 1.969"-1.970" | 1.969"-1.970" |
| | No. 4 | 1.953"-1.954" | 1.953"-1.954" |
| | No. 5 | 1.5625"-1.5635" | 1.5625"-1.5635" |
| VALVE TIMING | | 2 BBl. Carb. 4 BBl. Carb. | 2 BBl. Carb. |
| Intake Opens (BTC) | | 14° 14° | 19° |
| Intake Closes (ABC) | | 46° 54° | 45° |
| Exhaust Opens (BBC) | | 58° 56° | 59° |
| Exhaust Closes (ATC) | | 2° 12° | 1° |
| Valve Overlap | | 16° 26° | 20° |
| Intake Valve Duration | | 240° 248° | 244° |
| Exhaust Valve Duration | | 240° 248° | 240° |
| TIMING CHAIN | | | |
| Number of Links | | 68 | 68 |
| Pitch | | .375" | .375" |
| Width | | .625" | .625" |
| TAPPETS | | | |
| Type | | Mechanical | Mechanical |
| Body Diameter | | .9040"-.9045" | .9040"-.9045" |
| Clearance in Block | | .0005"-.0015" | .0005"-.0015" |
| Service Tappets Available | | Std., .001", .008", .030" | Std., .001", .008", .030" |
| Operating Clearance (Hot) | | .013" Intake .021" Exhaust | .013" Intake .021" Exhaust |
| CYLINDER HEAD | | | |
| Valve Seat Run-Out (Maximum) | | .002" | .002" |
| Intake Valve Seat Angle | | 45° | 45° |
| Seat Width (finish) | | .060"-.085" | .060"-.085" |
| Exhaust Valve Seat Angle | | 45° | 45° |
| Seat Width (finish) | | .040"-.060" | .040"-.060" |
| Cylinder Head Gasket (Thickness compressed) | | .028° | .028° |
| VALVE GUIDES | | | |
| Type | | Cast in Head | Cast in Head |
| Guide Bore Diameter | | .374"-.375" Std. | .374"-.375" Std. |
| VALVES—(INTAKE) | | | |
| Head Diameter | | 1.780" | 1.844" |
| Length (to center of valve face) | | 5.00" | 4.59" |
| Stem Diameter (Standard) | | .372"-.373" | .372"-.373" |
| Stem to Guide Clearance | | .001"-.003" | .001"-.003" |
| Maximum Allowable | | .017"*** | .017"*** |
| Face Angle | | 45° | 45° |
| Valve for Service | | Std., .005", .015", .030" Oversize Stem Diam. | Std., .005", .015", .030" Oversize Stem Diam. |
| Lift (Zero Lash) | | .395"* .415"** | .397" |

MyMopar.com

| | | |
|---|---|---|
| VALVES—(EXHAUST) | | |
| Head Diameter | 1.563″ | 1.563″ |
| Length to (center of valve face) | 4.45″ | 4.53″ |
| Stem Diameter (Standard) | .3715″ | .3715″ |
| Stem to Guide Clearance | .002″-.004″ | .002″-.004″ |
| Maximum Allowable | .017″*** | .017″*** |
| Face Angle | 45° | 45° |
| Valve for Service | Std., .005″, .015″, .030″ Oversize Stem Diam. | Std., .005″, .015″, .030″ Oversize Stem Diam. |
| Lift (Zero Lash) | .405″* .425** | .403″ |
| VALVE SPRINGS | | |
| Number | 16 | 16 |
| Free Length | 1.92″* 2.00″** | 1.92″ |
| Load when Compressed to (valve closed) | 49-57 lbs. @ 1-11/16″* 78-88 lbs. @ 1-11/16″** | 49-57 lbs. @ 1-11/16″ |
| Load when Compressed to (valve closed) | 137-150 lbs. @ 1-5/16″* 170-184 lbs. @ 1-5/16″** | 137-150 lbs. @ 1-5/16″ |
| Valve Springs I.D. | 1.010″-1.030″ | 1.010″-1.030″ |
| Maximum Allowable Out of Plumb | 1/16″ | 1/16″ |
| Valve Spring Installed Height (spring seat to retainer) | 1⅝″-1-11/16″ | 1⅝″-1-11/16″ |
| Use 1/16″ Spacer to Reduce Spring Height when Over | | |
| ROCKER SHAFT ASSEMBLY | | |
| Clearance Between Rocker Arm and Shaft | .001″-.003″ | .001″-.003″ |
| Clearance Between Rocker Arm and Bracket | — | .001″-.0045″ |
| ENGINE LUBRICATION | | |
| Pump Type | Rotary Full Pressure | Rotary Full Pressure |
| Capacity (qts.) | 4**** | 4**** |
| Pump Drive | Camshaft | Camshaft |
| Minimum Pump Pressure @ 500 R.P.M. | 20 PSI | 20 PSI |
| Operating Pressure at 1000 R.P.M. | 45-65 lbs. | 45-65 lbs. |
| Pressure Drop Resulting from Clogged Filter | 7-9 lbs. | 7-9 lbs. |
| Oil Filter Type | Full-Flow | Full-Flow |

*With 2 BBl. Carb. **With 4 BBl. Carb. ***With tools C-3973 & C-3339 using wobble method
****When Filter Element is Replaced Add 1 Quart.

## OIL PUMP—INSPECTION LIMITS FOR REPLACEMENT

| | 273 and 318 Cu. In. Engines |
|---|---|
| Oil Pump Cover | .0015 inch or more |
| Outer Rotor Length | .825 inch or less |
| Outer Rotor Diameter | 2.469 inch or less |
| Inner Rotor Length | .825 inch or less |
| Clearance Over Rotors—Outer | .004 inch or more |
| Inner | .004 inch or more |
| Outer Rotor Clearance | .012 inch or more |
| Tip Clearance Between Rotors | .010 inch or more |

## OVERSIZE AND UNDERSIZE ENGINE COMPONENT MARKINGS

| Displacement | Condition | Identification | Location of Identification |
|---|---|---|---|
| 273 cu. in. 318 cu. in. | .001″ U/S Crankshaft | Maltese Cross M-2-3 etc. (indicating No. 2 & 3 main bearing journal) | Following engine serial number |
| | | and/or R-1-4 etc. (indicating No. 1 & 4 connecting rod journal) | Crankshaft counterweight |
| | .010″ U/S Crankshaft | Maltese Cross and X M (indicates .010″ U/S all main journals) | Following engine serial number |
| | | and/or | Crankshaft counterweight |

MyMopar.com

| | | |
|---|---|---|
| R (indicating .010" U/S all rod journals) | | |
| .020" O/S Cylinder Bores | A | Following engine serial number |

## 8-CYLINDER ENGINES

| | "361" | "383" | "426" |
|---|---|---|---|
| **ENGINE** | | | |
| Type | 90° V | 90° V | 90° V |
| Number of Cylinders | 8 | 8 | 8 |
| Bore | 4.125" | 4.25" | 4.25" |
| Stroke | 3.375" | 3.375" | 3.750" |
| Piston Displacement | 361 cu. in. | 383 cu. in. | 426 cu. in. |
| Compression Ratio | 9.0 to 1 | 9.2 to 1*<br>10.0 to 1** | 10.3 to 1 |
| Compression Pressure with engine warm spark plugs removed—wide open throttle | 125-155 psi | 125-155 psi*<br>130-165 psi** | 130-165 psi |
| Maximum variation between cylinders (any one Engine) | 20 psi | 20 psi*<br>25 psi** | 25 psi |
| Firing Order | 1-8-4-3-6-5-7-2 | 1-8-4-3-6-5-7-2 | 1-8-4-3-6-5-7-2 |
| Basic Timing with C.A.P. | 10° B.T.C.<br>5° A.T.C. | 10° B.T.C.<br>5° A.T.C. | 10° B.T.C.<br>5° A.T.C. |
| **CYLINDER NUMBERING** (front to rear) | | page 8-101 | |
| Left Bank | 1-3-5-7 | 1-3-5-7 | 1-3-5-7 |
| Right Bank | 2-4-6-8 | 2-4-6-8 | 2-4-6-8 |
| **CYLINDER BLOCK** | | | |
| Cylinder Bore (standard) | 4.1245"-4.1265" | 4.2495"-4.2515" | 4.2495"-4.2515" |
| Cylinder More Out-of-Round (Max. allowable before reconditioning) | .005" | .005" | .005" |
| Cylinder Bore Taper (Max. allowable before reconditioning) | .010" | .010" | .010" |
| Reconditioning Working Limits (for taper and out-of-round) | .001" | .001" | .001" |
| Maximum Allowable Oversize (cylinder bore) | .040" | .040" | .040" |
| Tappet Bore Diameter | .9050"-.9058" | .9050"-.9058" | .9050"-.9058" |
| Distributor Lower Drive Shaft Bushings (press fit in block) | .0005"-.0040" | .0005"-.0040" | .0005"-.0040" |
| Ream to | .4865"-.4880" | .4865"-.4880" | .4865"-.4880" |
| Shaft to Bushing Clearance | .0007"-.0027" | .0007"-.0027" | .0007"-.0027" |
| **PISTONS** | | | |
| Type Material | Autothermic | Autothermic | Autothermic |
| Clearance in Bore (with .0015 x ½" feeler stock) | W/Steel Struts | W/Steel Struts | W/Steel Struts |
| Land Clearance (diametral) | Method Not Used | Method Not Used | Method Not Used |
| | .032"-.038" | .032"-.038" | .032"-.038" |
| Clearance at Top of Skirt | .0005"-.0015" | .0005"-.0015" | .0005"-.0015" |
| Weight (Std. through .040" oversize) | 717 gms. | 770 gms. | 801 gms. |
| Piston Length (overall) | 3.81" | 3.84" | 3.84" |
| Ring Groove Depth | | | |
| No. 1 | .214" | .220" | .220" |
| No. 2 | .214" | .220" | .220" |
| No. 3 | .203" | .208" | .208" |
| Pistons for Service | Std. .005", .020", .040" Oversize | Std. .005", .020", .040" Oversize | Std. .005", .020", .040" Oversize |
| **PISTON PINS** | | | |
| Type | Press Fit in Rod | Press Fit in Rod | Press Fit in Rod |
| Diameter | 1.0935"-1.0947" | 1.0935"-1.0947" | 1.0935"-1.0937" |
| Length | 3.555"-3.575" | 3.555"-3.575" | 3.555"-3.575" |
| Clearance in Piston (Light Thumb Push @ 70°F.) | .00045"-.00075" | .00045"-.00075" | .00045"-.00075" |
| Interference in Rod | .0007"-.0012" | .0007"-.0012" | .0007"-.0012" |
| Pins for Service | Standard Only | Standard Only | Standard Only |

MyMopar.com

| | | | |
|---|---|---|---|
| PISTON RINGS | | | |
| Number of Rings per Piston | 3 | 3 | 3 |
| Compression | 2 | 2 | 2 |
| Oil | 1 | 1 | 1 |
| Oil Ring Type | 3-piece Chrome-plated rails with Stainless steel expander-spacer | 3-piece Chrome-plated rails with Stainless steel expander-spacer | 3-piece Chrome-plated rails with Stainless steel expander-spacer |
| Ring Width | | | |
| Compression | .0775"-.0780" | .0775"-.0780" | .0775"-.0780" |
| Oil (Steel rails) | .025" | .025" | .025" |
| Ring Gap | | | |
| Compression | .013"-.025" | .013"-.025" | .013"-.025" |
| Oil (Steel rails) | .015"-.055" | .015"-.055" | .015"-.055" |
| Ring Side Clearance | | | |
| Compression | .0015"-.0030" | .0015"-.0030" | .0015"-.0030" |
| Oil (Steel rails) | .0002"-.005" | .0002"-.005" | .0002"-.005" |
| Service Rings | | | |
| Ring Gap | | | |
| Compression | .010"-.020" | .010"-.020" | .010"-.020" |
| Oil (Steel rails) | .015"-.062" | .015"-.062" | .015"-.062" |
| Ring Side Clearance | | | |
| Compression | .0015"-.004" | .0015"-.004" | .0015"-.004" |
| Oil (Steel rails) | .0002"-.005" | .0002"-.005" | .0002"-.005" |
| CONNECTING RODS | | | |
| Length (Center to Center) | 6.356"-6.360" | 6.356"-6.360" | 6.766"-6.770" |
| Weight (less bearing shells) | 812 ± 4 gms. | 812 ± 4 gms. | 846 ± 4 gms. |
| Side Clearance (two rods) | .009"-.017" | .009"-.017" | .009"-.017" |
| Piston Pin Bore Diameter | 1.0925"-1.0928" | 1.0925"-1.0928" | 1.0925"-1.0928" |
| CONNECTING ROD BUSHING | | | |
| Type | None | None | None |
| CONNECTING ROD BEARINGS (Type) | Steel Backed Babbitt | Steel Backed Babbitt | Steel Backed Grid Type |
| Diameter and Width | 2.376"-.927" | 2.376"-.927" | 2.376"-.927" |
| Clearance desired | .0005"-.0015" | .0005"-.0015" | .0005"-.0015" |
| Maximum Allowable | .0025" | .0025" | .0025" |
| Bearings for Service | Std., .001", .002", .003", .010", .012" | Std., .001", .002", .003", .010", .012" | Std., .001", .002", .003", .010", .012" |
| CRANKSHAFT | | | |
| Type | Fully Counter-Balanced | Fully Counter-Balanced | Fully Counter-Balanced |
| Bearings | Steel Backed Babbitt | Steel Backed Babbitt | Steel Backed Babbitt |
| Thrust Taken By | No. 3 Main Bearing | No. 3 Main Bearing | No. 3 Main Bearing |
| End Play | .002"-.007" | .002"-.007" | .002"-.007" |
| Maximum Allowable | .010" | .010" | .010" |
| Diametral Clearance Desired | .0005"-.0015" | .0005"-.0015" | .0005"-.0015" |
| Diametral Clearance Allowed | .0025" | .0025" | .0025" |
| Finish at Rear Oil Seal Surface | Diagonal Knurling | Diagonal Knurling | Diagonal Knurling |
| MAIN BEARING JOURNALS | | | |
| Diameter | 2.6245"-2.6255" | 2.6245"-2.6255" | 2.7495"-2.7505" |
| Maximum Allowable Out-of-Round and/or Taper | .001" | .001" | .001" |
| Bearings for Service Available in Standard and the following undersizes | .001", .002", .003", .010", .012" | .001", .002", .003", .010", .012" | .001", .002", .003", .010", .012" |
| CONNECTING ROD JOURNALS | | | |
| Diameter | 2.374"-2.375" | 2.374"-2.375" | 2.374"-2.375" |
| Maximum Allowable Out-of-Round and/or Taper | .001" | .001" | .001" |
| CAMSHAFT | | | |
| Drive | Chain | Chain | Chain |
| Bearings | Steel Backed Babbitt | Steel Backed Babbitt | Steel Backed Babbitt |
| Number | 5 | 5 | 5 |
| Diametral Clearance | .001"-.003" | .001"-.003" | .001"-.003" |
| Maximum Allowable before Reconditioning | .005" | .005" | .005" |
| Thrust Taken By | Cylinder Block | Cylinder Block | Cylinder Block |

MyMopar.com

| | | | | |
|---|---|---|---|---|
| CAMSHAFT JOURNALS | | | | |
| Diameter | No. 1 | 1.998″-1.999″ | 1.998″-1.999″ | 1.998″-1.999″ |
| | No. 2 | 1.982″-1.983″ | 1.982″-1.983″ | 1.982″-1.983″ |
| | No. 3 | 1.967″-1.968″ | 1.967″-1.968″ | 1.967″-1.968″ |
| | No. 4 | 1.951″-1.952″ | 1.951″-1.952″ | 1.951″-1.952″ |
| | No. 5 | 1.748″-1.749″ | 1.748″-1.749″ | 1.748″-1.749″ |
| CAMSHAFT BEARINGS | | | | |
| Diameter | No. 1 | 2.000″-2.001″ | 2.000″-2.001″ | 2.000″-2.001″ |
| | No. 2 | 1.984″-1.985″ | 1.984″-1.985″ | 1.984″-1.985″ |
| | No. 3 | 1.969″-1.970″ | 1.969″-1.970″ | 1.969″-1.970″ |
| | No. 4 | 1.953″-1.954″ | 1.953″-1.954″ | 1.953″-1.954″ |
| | No. 5 | 1.750″-1.751″ | 1.750″-1.751″ | 1.750″-1.751″ |
| VALVE TIMING | | 2 BBl. Carb. | 2 BBl. Carb. 4 BBl. Carb. | 4 BBl. Carb. |
| Intake Opens (BTC) | | 13° | 13° 18° | 18° |
| Intake Closes (ABC) | | 59° | 59° 58° | 58° |
| Exhaust Opens (BBC) | | 59° | 59° 66° | 66° |
| Exhaust Closes (ATC) | | 13° | 13° 14° | 14° |
| Valve Overlap | | 26° | 26° 32° | 32° |
| Intake Valve Duration | | 252° | 252° 256° | 256° |
| Exhaust Valve Duration | | 252° | 252° 260° | 256° |
| TIMING CHAIN | | | | |
| Number of Links | | 50 | 50 | 50 |
| Pitch | | .50″ | .50″ | .50″ |
| Width | | .75″ | .75″ | .75″ |
| TAPPETS | | | | |
| Type | | Hydraulic | Hydraulic | Hydraulic |
| Body Diameter | | .9040″-.9045″ | .9040″-.9045″ | .9040″-.9045″ |
| Clearance in Block | | .0005″-.0015″ | .0005″-.0015″ | .0005″-.0015″ |
| Service Tappets Available | | Std., .001″, .008″, .030″ | Std., .001″, .008″, .030″ | Std., .001″, .008″, .030″ |
| Clearance Between Valve Stem and Rocker Arm Pad (Dry Lash) | | .060″-.210″ | .060″-.210″ | .060″-.210″ |
| CYLINDER HEAD | | | | |
| Valve Seat Run-Out (Maximum) | | .002″ | .002″ | .002″ |
| Intake Valve Seat Angle | | 45° | 45° | 45° |
| Seat Width (finish) | | .060″-.085″ | .060″-.085″ | .060″-.085″ |
| Exhaust Valve Seat Angle | | 45° | 45° | 45° |
| Seat Width (finish) | | .040″-.060″ | .040″-.060″ | .040″-.060″ |
| Cylinder Head Gasket (Thickness compressed) | | .022″ | .022″ | .022″ |
| VALVE GUIDES | | | | |
| Type | | Cast in Head | Cast in Head | Cast in Head |
| Guide Bore Diameter | | .374″-.375″ Std. | .374″-.375″ Std. | .374″-.375″ Std. |
| VALVES—(INTAKE) | | | | |
| Head Diameter | | 2.08″ | 2.08″ | 2.08″ |
| Length (to center of valve face) | | 4.87″ | 4.87″ | 4.87″ |
| Stem Diameter (Standard) | | .372″-.373″ | .372″-.373″ | .372″-.373″ |
| VALVES—(INTAKE)—Continued | | | | |
| Stem to Guide Clearance | | .001″-.003″ | .001″-.003″ | .001″-.003″ |
| Maximum Allowable | | .017″*** | .017″*** | .017″*** |
| Face Angle | | 45° | 45° | 45° |
| Valve for Service | | Std., .005″, .015″, .030″ Oversize Stem Diam. | Std., .005″, .015″, .030″ Oversize Stem Diam. | Std., .005″, .015″, .030″ Oversize Stem Diam. |
| Lift (Zero Lash) | | .392″ 2 BBl.* | .392″ .425″ 2 BBl.* 4 BBl.** | .425″** |
| VALVES—(EXHAUST) | | | | |
| Head Diameter | | 1.60″ | 1.60″ | 1.60″ |
| Length to (center of valve face) | | 4.87″ | 4.87″ | 4.87″ |
| Stem Diameter (Standard) | | .371″-.372″ | .371″-.372″ | .371″-.372″ |
| Stem to Guide Clearance | | .002″-.004″ | .002″-.004″ | .002″-.004″ |
| Maximum Allowable | | .017″*** | .017″*** | .017″*** |
| Face Angle | | 45° | 45° | 45° |
| Valve for Service | | Std., .005″, .015″, .030″ Oversize Stem Diam. | Std., .005″, .015″, .030″ Oversize Stem Diam. | Std., .005″, .015″, .030″ Oversize Stem Diam. |
| Lift (Zero Lash) | | .390″ 2 BBl. | .390″ .435″ 2 BBl. 4 BBl. | .435″ 4 BBl. |
| VALVE SPRINGS | | | | |
| Number | | 16 | 16 | 16 |

MyMopar.com

| | | | |
|---|---|---|---|
| Free Length | 2.34" | 2.34"*<br>2.58"** | 2.58" |
| Load when Compressed to (valve closed) | 95-105 lbs. @ 1-55/64" | 95-105 @ 1-55/64"*<br>121-129 @ 1-55/64"** | 121-129 @ 1-55/64" |
| Load when Compressed to (valve open) | 187-203 lbs. @ 1-15/32" | 187-203 lbs. @ 1-15/32"<br>192-208 @ 1-7/16"** | 192-208 @ 1-7/16" |
| Valve Springs I.D. | 1.010"-1.030" | 1.010"-1.030" | 1.010"-1.030" |
| Maximum Allowable Out of Plumb | 1/16" | 1/16" | 1/16" |
| Valve Spring Installed Height (spring seat to retainer) | 1-53/64"-1-57/64" | 1-53/64"-1-57/64" | 1-53/64"-1-57/64" |
| Use 1/16" Spacer to Reduce Spring Height when Over Specifications | | | |

ENGINE LUBRICATION

| | | | |
|---|---|---|---|
| Pump Type | Rotary Full Pressure | Rotary Full Pressure | Rotary Full Pressure |
| Capacity (qts.) | 4**** | 4**** | 4**** |
| Pump Drive | Camshaft | Camshaft | Camshaft |
| Minimum Pump Pressure @ 500 R.P.M. | 20 PSI | 20 PSI | 20 PSI |
| Operating Pressure at 1000 R.P.M. | 45-65 lbs. | 45-65 lbs. | 45-65 lbs. |
| Pressure Drop Resulting from Clogged Filter | 7-9 lbs. | 7-9 lbs. | 7-9 lbs. |
| Oil Filter Type | Full-Flow | Full-Flow | Full-Flow |

*With 2 BBl. Carb. **With 4 BBl. Carb. ***With tools C-3973 & C-3339 using wobble method
****When Filter Element is Replaced Add 1 Quart.

## OIL PUMP—INSPECTION LIMITS FOR REPLACEMENT

| | 361, 383 and 426 Cu. In. Engines |
|---|---|
| Oil Pump Cover | .0015 inch or more |
| Outer Rotor Length | .943 inch or less |
| Outer Rotor Diameter | 2.469 inch or less |
| Inner Rotor Length | .942 inch or less |
| Clearance Over Rotors—Outer | .004 inch or more |
| Inner | .005 inch or more |
| Outer Rotor Clearance | .012 inch or more |
| Tip Clearance Between Rotors | .010 inch or more |

## OVERSIZE AND UNDERSIZE ENGINE COMPONENT MARKINGS

| Displacement | Condition | Identification | Location of Identification |
|---|---|---|---|
| 361 cu. in.<br>383 cu. in.<br>426 cu. in. | .001" U/S Crankshaft | Maltese Cross M-2-3 etc. (indicating No. 2 & 3 main bearing journal) and/or R-1-4 etc. (indicating No. 1 & 4 connecting rod journals) | Top pad—Front of engine<br>Crankshaft counterweight |
| | .010" U/S Crankshaft | Maltese Cross and X M-10 (indicates .010" U/S all main journals) and/or R-10 (indicates .010" U/S all rod journals) | Top pad—Front of engine<br>Crankshaft counterweight |
| | .020" O/S Cylinder Bores | A | Top pad—Front of engine |
| | .008" O/S Tappets | ♦ | Top pad—Front of engine |
| | .005" O/S Valve Stems | O.S. | Single bolt boss on end of the head |

MyMopar.com

## TIGHTENING REFERENCE

## 170-225 CUBIC INCH ENGINES

| | Torque Foot-Pounds | Thread Size |
|---|---|---|
| Connecting Rod Nut | 45 | 3/8-24 |
| Cylinder Head Bolt | 65 | 9/16-14 |
| Main Bearing Cap Bolt | 85 | 1/2-13 |
| Spark Plug | 30 | 14mm |
| Camshaft Lockbolt | 35 | 9/16-14 |
| Carburetor to Manifold Nut | 30 | 3/8-16 |
| Chain Case Cover Bolt | 200 in.-lbs. | 5/16-18 |
| Torque Converter Housing Bolt | 30 | 3/8-16 |
| Converter Brace to Aluminum Housing | 40 | 9/16-14 |
| Converter Brace to Engine Block | 30 | 3/8-16 |
| Clutch Housing Bolt | 30 | 3/8-16 |
| Crankshaft Rear Bearing Seal Retainer | 30 | 3/8-16 |
| Cylinder Head Cover Bolt | 40 in.-lbs. | 1/4-20 |
| Distributor Clamp Bolt | 200 in.-lbs. | 5/16-18 |
| Engine Front Mounting to Frame Nut | 85 | 1/2-20 |
| Engine Front Mounting to Block Nut | 45 | 7/16-20 |
| Engine Rear Mount Bolts | 35 | 7/16-14 |
| | | 3/8-24 |
| Exhaust Manifold Nut | 10 | 5/16-24 |
| Exhaust Pipe Flange Nut | 30 | 7/16-20 |
| Exhaust Pipe Clamp Bolt | 20 | 3/8-24 |
| Exhaust Pipe Support Clamp Bolt | 20 | 3/8-24 |
| Fan Attaching Bolt | 200 in.-lbs. | 5/16-18 |
| Flywheel Housing to Cylinder Block Bolt | 50 | 7/16-14 |
| Flywheel Housing Cover Bolt | 7 | 1/4-20 |
| Fuel Pump Attaching Bolt | 30 | 3/8-16 |
| Alternator Bracket Bolt | 30 | 3/8-16 |
| Alternator Mounting Nut | 200 in.-lbs. | 5/16-18 |
| Alternator Adjusting Strap Bolt | 15 | 5/16-18 |
| Alternator Adjusting Strap Mounting Bolt | 30 | 3/8-16 |
| Intake to Exhaust Manifold Bolt | 200 in.-lbs. | 5/16-18 |
| Manifold Heat Control Counterweight Bolt | 50 in.-lbs. | 10-32 |
| Oil Pan Drain Plug | 20 | 1/2-20 |
| Oil Pan Bolt | 200 in.-lbs. | 5/16-18 |
| Oil Pump Cover Bolt | 130 in.-lbs. | 1/4-20 |
| Oil Pump Attaching Bolt | 200 in.-lbs. | 5/16-18 |
| Oil Filter Attaching Stud | 30 | 3/4-16 |
| Oil Pressure Gauge Sending Unit | 60 in.-lbs. | 1/8 N.P.T.F. |
| Rocker Shaft Bracket Bolt | 25 | 3/8-16 |
| Starter Mounting Bolt | 50 | 7/16-14 |
| Temperature Gauge Sending Unit | 180 in.-lbs. | 1/4 N.P.T.F. |
| Water Pump to Housing Bolt | 30 | 3/8-16 |

## 273-318 CUBIC INCH ENGINES

| | | |
|---|---|---|
| Connecting Rod Nut—Plain | 45 | 3/8-24 |
| Cylinder Head Bolt | 85 | 1/2-13 |
| Main Bearing Cap | 85 | 1/2-13 |
| Camshaft Nut | 125 | |
| Camshaft Lockbolt | 35 | |
| Camshaft Thrust Plate 273 Cubic Inch | 210 in.-lbs. | 5/16-18 |
| 318 Cubic Inch | 15 | 5/16-18 |
| Chain Case Cover (Cast) | 30 | 3/8-16 |
| Clutch Housing Bolt | 30 | 3/8-16 |
| Clutch Housing Vent Hole | 100 in-lbs. | 1/4-20 |
| Clutch Housing Pan Drain Plug | 35 | |
| Crankshaft Bolt | 135 | 3/4-16 |
| Cylinder Head Cover | 36 in-lbs. | |
| Engine Front Mounting | | |
| To Engine Bosses | 45 | |
| To Frame | 85 | |

MyMopar.com

| | | |
|---|---|---|
| To Frame Bracket Stud | 20 | |
| Engine Rear Mounting | | |
| To Transmission | 35 | |
| To Frame | 35 | |
| Flywheel Housing to Cylinder Block | 50 | |
| Flywheel Housing Cover | 100 in.-lbs. | 1/4-20 |
| Intake Manifold 273 Cubic Inch | 270 in.-lbs. | 3/8-16 |
| 318 Cubic Inch | 40 | 3/8-16 |
| Oil Level Indicator Tube Bracket | 130 in.-lbs. | 1/4-28 |
| Oil Pan Drain Plug | 20 | 1/2-20 |
| Oil Pan Bolt | 15 | 5/16-18 |
| Oil Pump Cover Bolt | 15 | 1/4-20 |
| Oil Pump Attaching Bolt | 35 | 3/8-16 |
| Oil Filler Tube | 30 | |
| Rocker Shaft Bracket Bolt | 15 | 5/16-18 |
| Spark Plug | 30 | 14mm |
| Vibration Damper Bolt | 200 in.-lbs. | 5/16-24 |

## 361, 383,426 CUBIC INCH ENGINES

| | | |
|---|---|---|
| Connecting Rod Nut—Plain | 45 | 3/8-24 |
| Cylinder Head Bolt | 70 | 7/16-14 |
| Main Bearing Cap Bolt | 85 | 1/2-13 |
| Spark Plug | 30 | 14mm |
| Camshaft Lockbolt | 35 | 7/16-14 |
| Carburetor to Manifold Nut | 7 | 5/16-24 |
| Chain Case Cover Bolt | 15 | 5/16-18 |
| Torque Converter Housing Bolt | 30 | 3/8-16 |
| Clutch Housing Bolt | 30 | 3/8-16 |
| Crankshaft Rear Bearing Seal Retainer | 30 | 3/8-16 |
| Crankshaft Bolt (Vibration Damper) | 135 | 3/4-16 |
| Cylinder Head Cover Stud and Nut | 40 in.-lbs. | 1/4-28 |
| Distributor Clamp Bolt | 15 | 5/16-18 |
| Engine Front Mounting to Frame Nut | 85 | 1/2-20 |
| Engine Front Mounting to Block Nut | 45 | 7/16-20 |
| Exhaust Manifold Nut | 30 | 3/8-16 |
| Exhaust Pipe Flange Nut | 40 | 7/16-20 |
| Exhaust Pipe Clamp Bolt | 20 | 3/8-24 |
| Exhaust Pipe Support Clamp Bolt | 20 | 3/8-24 |
| Fan Attaching Bolt | 15-18 | 5/16-18 |
| Fan Belt Idler Pulley Nut | 45 | 7/16-20 |
| Fan Belt Idler Pulley Bracket Bolt | 30 | 3/8-16 |
| Flywheel Housing to Cylinder Block Bolt | 50 | 7/16-14 |
| Flywheel Cover Bolt | 7 | 1/4-20 |
| Fuel Pump Attaching Bolt | 30 | 3/8-16 |
| Alternator Mounting Nut | 20 | 5/16-24 |
| Alternator Adjusting Strap Bolt | 15 | 5/16-18 |
| Alternator Adjusting Strap Mounting Bolt | 30 | 3/8-16 |
| Intake Manifold Bolt | 50 | 3/8-16 |
| Manifold Heat Control Counterweight Bolt | 50 in.-lbs. | 10-32 |
| Oil Pan Drain Plug | 20 | 1/2-20 |
| Oil Pan Bolt | 15 | 5/16-18 |
| Oil Pump Cover Bolt | 10 | 5/16-18 |
| Oil Pump Attaching Bolt | 35 | 3/8-16 |
| Rocker Shaft Bracket Bolt | 25 | 3/8-16 |
| Starter Mounting Bolt | 50 | 7/16-14 |
| Vibration Damper Bolt | 15 | 5/16-18 |
| Valve Tappet Cover End Bolt | 9 | 1/4-20 |
| Water Pump to Housing Bolt | 30 | 3/8-16 |
| Water Pump Housing to Cylinder Block Bolt | 30 | 3/8-16 |
| A/C Compressor to Engine Bolt | 30 | 3/8-16 |

MyMopar.com

# EXHAUST SYSTEM

## CONTENTS


| | Page |
|---|---|
| EXHAUST MANIFOLD (273 Cu. In. Engine) | 7 |
| EXHAUST MANIFOLD (318, 361, 383 and 426 Cu. In. Engine) | 9 |
| EXHAUST PIPES, MUFFLERS AND TAIL PIPES | 2 |
| GENERAL INFORMATION | 1 |
| INTAKE MANIFOLD (273 Cu. In. Engine) | 7 |
| INTAKE MANIFOLD (318, 361, 383 and 426 Cu. In. Engines) | 9 |
| INTAKE AND EXHAUST MANIFOLD ASSEMBLY (6 Cyl. Engines) | 6 |
| MANIFOLD HEAT CONTROL VALVE (170 and 225 Cu. In. Engines) | 10 |
| MANIFOLD HEAT CONTROL VALVE (273 Cu. In. Engine) | 11 |
| MANIFOLD HEAT CONTROL VALVE 318, 361, 383 and 426 Cu. In. Engines | 13 |
| Counterweight Installation | 14 |
| 318, Cu. In. Engine | 14 |
| 361, 383 and 426 Cu. In. Engines | 14 |
| Counterweight Removal (All Models) | 13 |
| Removal | 14 |
| Servicing | 14 |
| Thermostat Installation | 14 |
| 318 Cu. In. Engine | 14 |
| 361, 383 and 426 Cu. In. Engines | 14 |
| Thermostat Removal (All Models) | 13 |
| MANIFOLD HEAT CONTROL VALVE REPLACEMENT | 14 |
| SERVICE DIAGNOSIS | 1 |
| SERVICE PROCEDURES | 2 |
| TIGHTENING REFERENCE | 15 |


## GENERAL INFORMATION

Aluminized mufflers and tail pipes are used on all models provided with a single line exhaust system. Stainless steel mufflers are used in dual exhaust systems.

The exhaust systems on Valiant and Belvedere models are suspended by "C" type supports (Figs. 1, 2, 3, 4, 5, 6 and 7). The exhaust system on Belvedere 6-cylinder models, is now located on the right side of the vehicle instead of on the left side (Fig. 4).

The exhaust system on Valiant models equipped with the 273 cubic inch engine and 4-barrel carburetor, use a combination rear muffler and tail pipe assembly (Fig. 3). The assembly is suspended at the rear end of the tail pipe by an "L" shaped support.

Double strap supports are used to suspend the rear of the mufflers on Fury single exhaust systems (Figs. 8 and 9). "O" type supports are used at this location on Fury 8-cylinder models with dual exhaust systems (Fig. 10). Ball joint connections are used in the exhaust pipes forward of the mufflers on the dual exhaust system to facilitate alignment of the systems (Fig. 10).

Ball joint seating connections at the exhaust manifolds, which facilitate alignment of the exhaust system, are used on 273 cubic inch V-8 engines (Figs. 3 and 5).

The right hand exhaust manifolds on all engines incorporate a thermostatic heat control valve to direct the exhaust gases to a heat chamber beneath the carburetor mounting flange to help vaporize the fuel (Figs. 20, 24, 25).

On six-cylinder engines, the heat control valve is located in the manifold on the left hand side of the engine (Fig. 16).

## SERVICE DIAGNOSIS

| Condition | Possible Cause | Correction |
|---|---|---|
| EXCESSIVE EXHAUST NOISE | (a) Leaks at pipe joints. | (a) Tighten clamps at leaking joints. |
| | (b) Burned or blown out muffler. | (b) Replace muffler assembly. |
| | (c) Burned or rusted out exhaust pipe. | (c) Replace exhaust pipe. |
| | (d) Exhaust pipe leaking at manifold flange. | (d) On 273 cu. in. engines, tighten ball joint connection attaching bolt nuts to 24 foot-pounds. On all other engines, install a new gasket and tighten flange bolt nuts to 35 foot-pounds. |
| | (e) Exhaust manifold cracked or broken. | (e) Replace manifold. |
| | (f) Leak between manifold and cylinder head. | (f) Tighten manifold to cylinder head stud nuts to 10 foot-pounds on 6-cylinder engines; 15 foot-pounds on 273 cu. in. engines and 30 foot-pounds on all other V-8 engines. |

MyMopar.com

| Condition | Possible Cause | Correction |
|---|---|---|
| **LEAKING EXHAUST GASES** | (a) Leaks at pipe joints. | (a) Tighten clamps at leaking joints to 100 inch-pounds. |
| | (b) Damaged or improperly installed gaskets. | (b) Replace gaskets as necessary. |
| | (c) Restriction in muffler or tail pipe. | (c) Remove restriction, if possible, or replace as necessary. |
| **ENGINE HARD TO WARM UP OR WILL NOT RETURN TO NORMAL IDLE** | (a) Heat control valve frozen in the open position. | (a) Free up manifold heat control valve using a suitable solvent. |
| **NOISE IN MANIFOLD** | (a) Thermostat broken. | (a) Replace thermostat. |
| | (b) Weak, broken or missing anti-rattle spring. | (b) Replace spring. |
| **MANIFOLD HEAT CONTROL VALVE RATTLE** | (a) Thermostat broken. | (a) Replace thermostat. |
| | (b) Broken, weak or missing anti-rattle spring. | (b) Replace spring. |

## SERVICE PROCEDURES

## EXHAUST PIPES, MUFFLERS AND TAIL PIPES

### *Removal*

(1) Raise vehicle on hoist and apply penetrating oil to all clamp bolts and nuts to loosen rust and corrosion.

**If only the muffler is to be replaced, cut the extension pipe just forward of the muffler with a hack saw or cutter. It is not necessary to remove the**

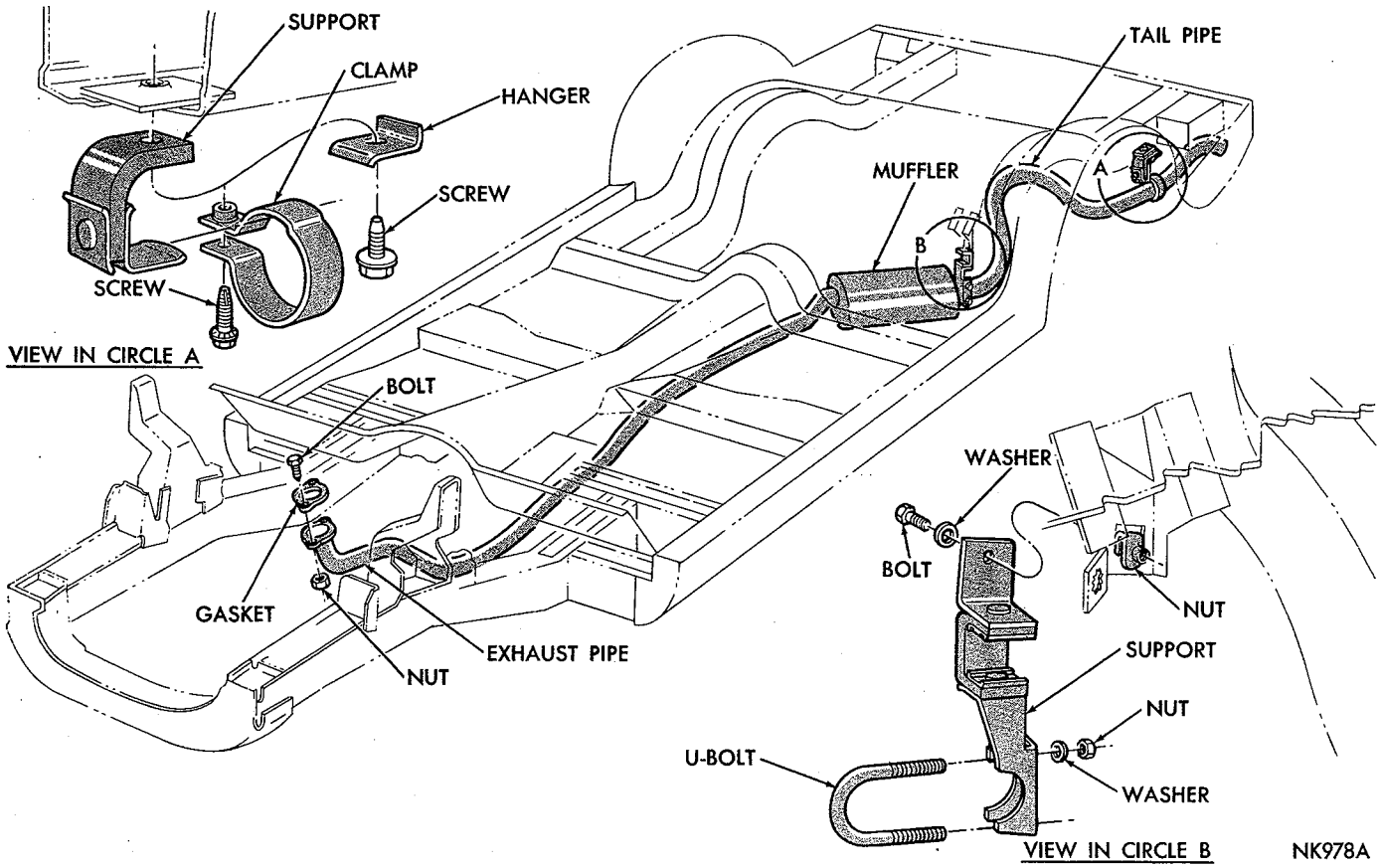


*Fig. 1—Exhaust System (Valiant 6-Cyl.)*

MyMopar.com

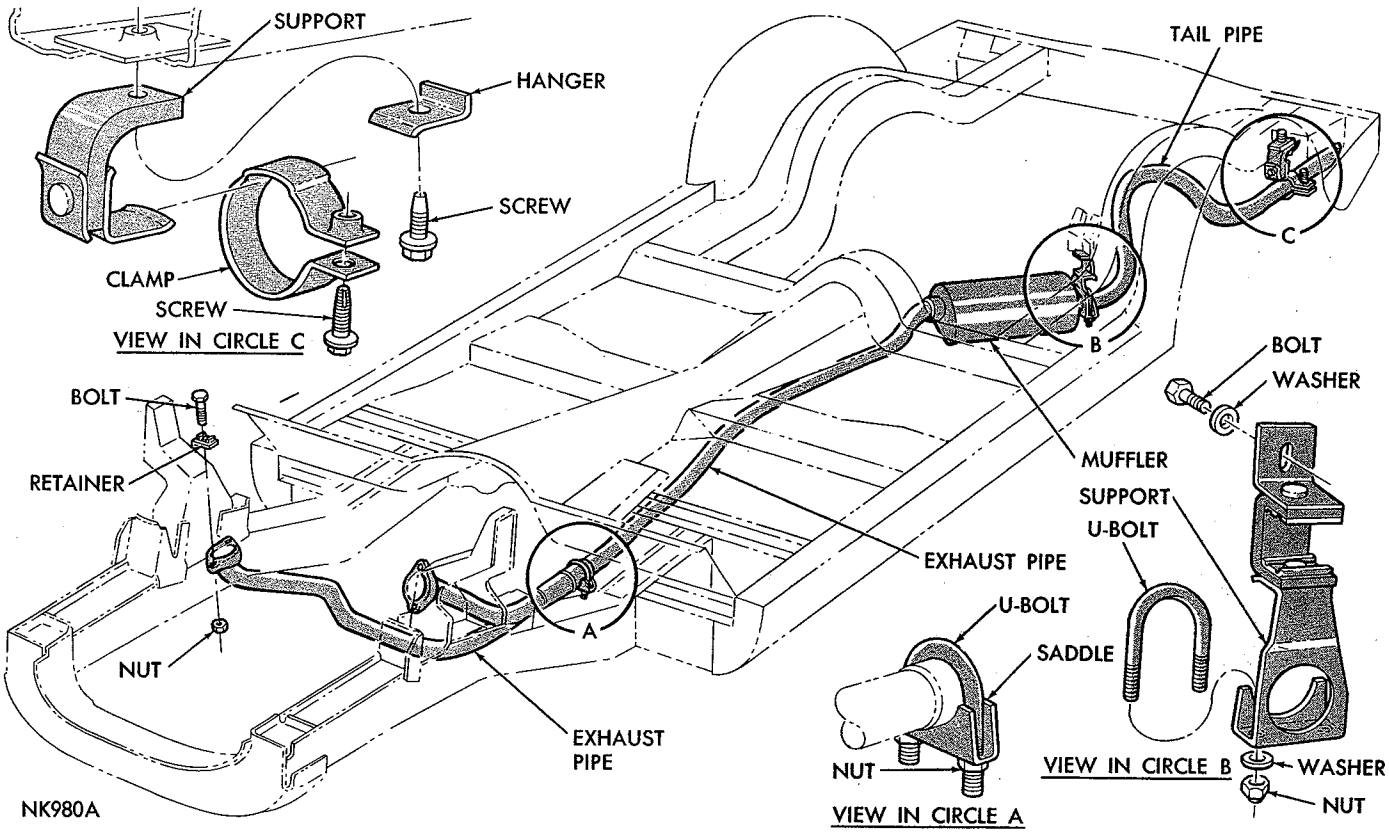


***Fig. 2—Exhaust System—(Valiant 8-Cyl. 2 BBL. Carburetor)***

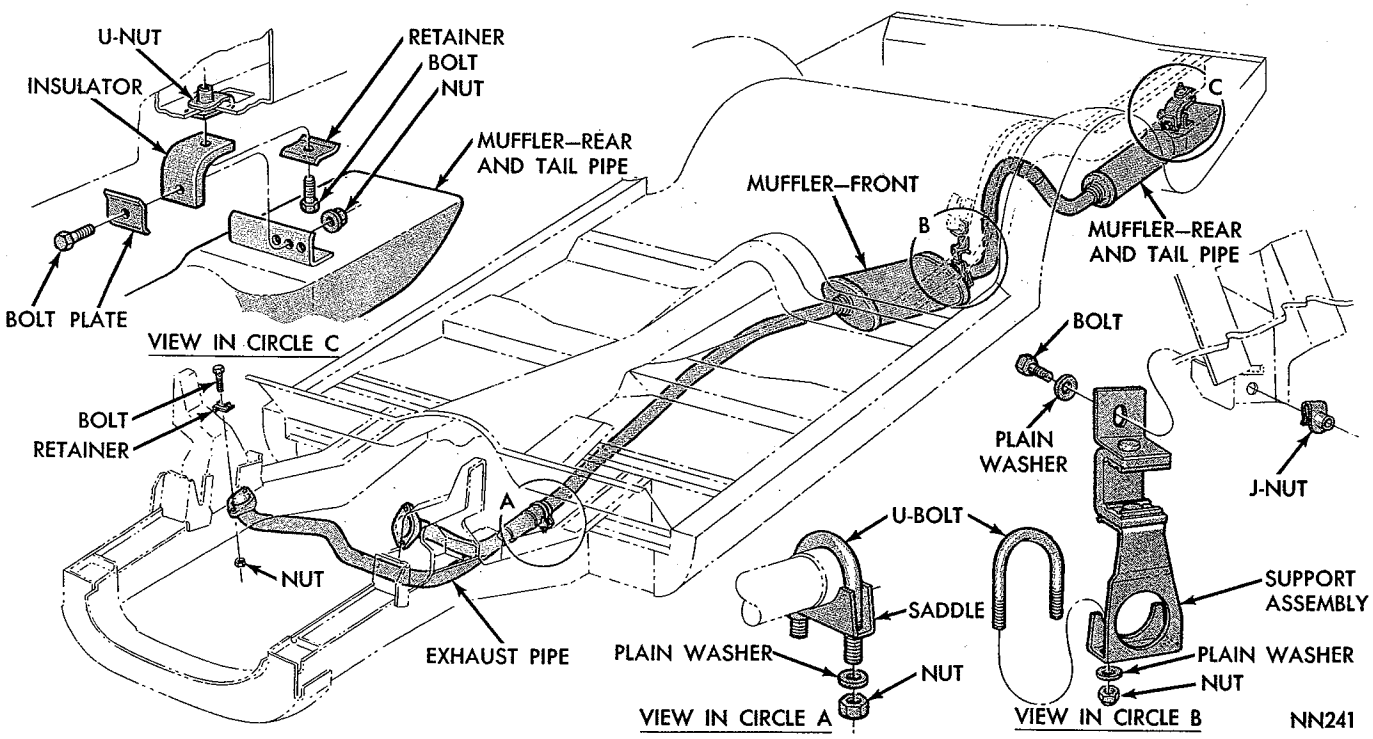


***Fig. 3—Exhaust System (273 Cu. In. Engine with 4 BBL. Carburetor)***

MyMopar.com

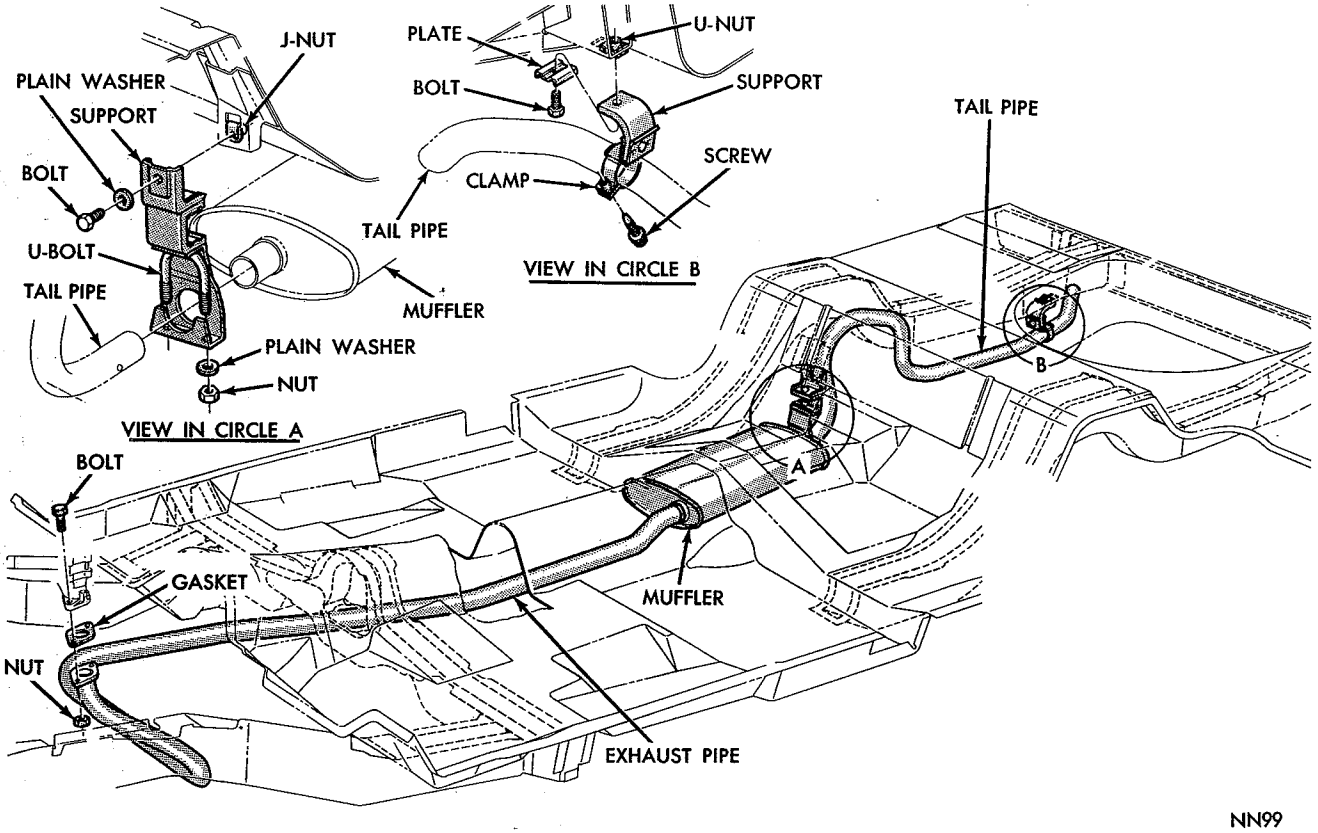


***Fig. 4—Exhaust System (Belvedere 6-Cyl.)***

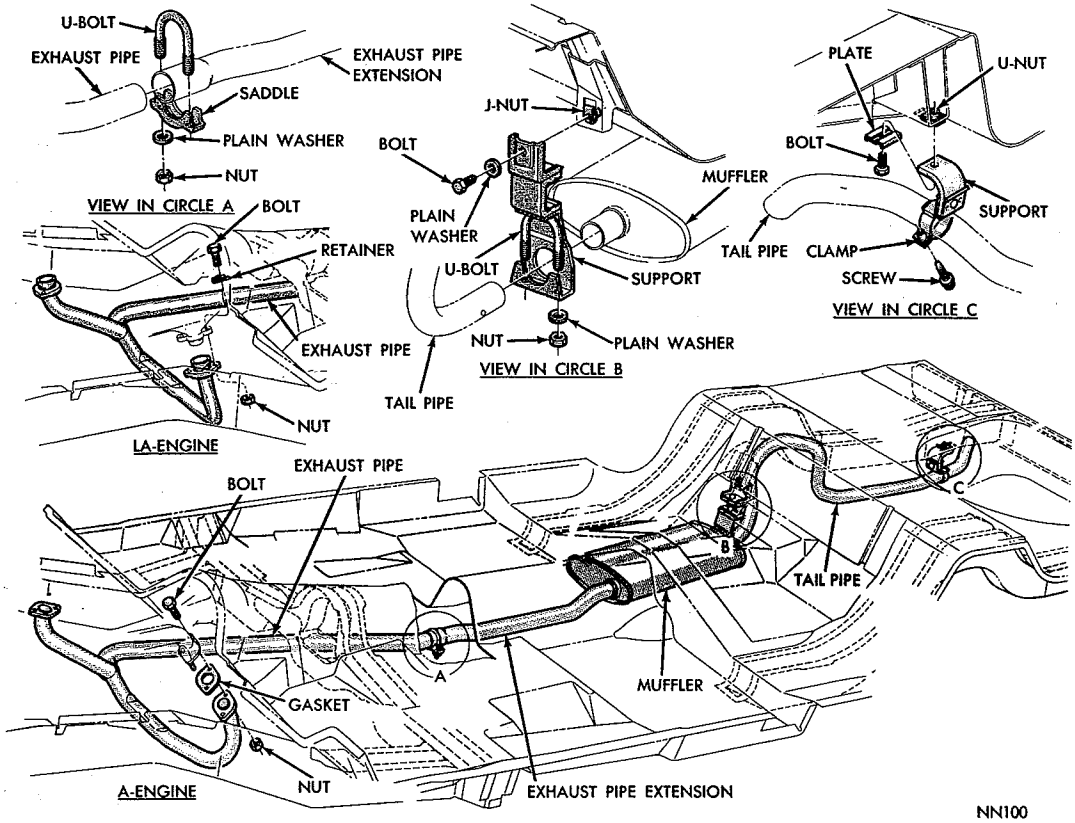


***Fig. 5—Exhaust System—Single (Belvedere 273, 318 Cu. In. Engines)***

MyMopar.com

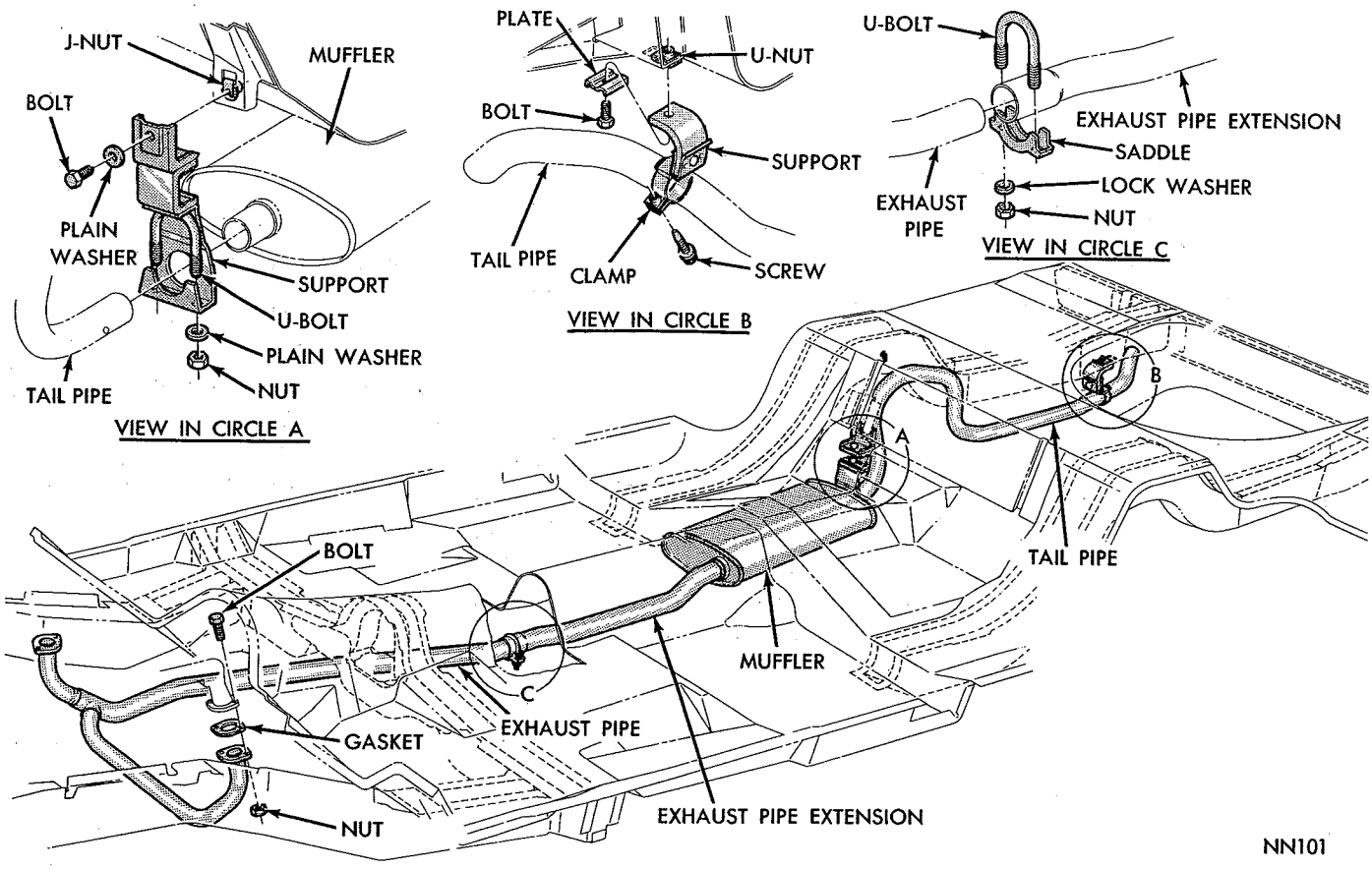


***Fig. 6—Exhaust System—Single (Belvedere 8-Cyl. "B" Engine)***

**exhaust pipe. The replacement muffler can be installed, using a clamp at the front of the muffler.**

(2) Remove clamps and supports from exhaust pipe, muffler and tail pipe (Figs. 1, 2, 3, 4, 5, 6, 7, 8, 9 and 10).

(3) Disconnect exhaust pipe at exhaust manifolds and remove exhaust pipe. On models using gaskets at exhaust pipe flanges, discard gaskets and carefully clean manifold flanges of any gasket particles.

(4) Remove muffler and extension pipe assembly.

(5) Raise rear end of vehicle to relieve body weight from rear springs and remove tail pipe.

### *Installation (except Valiant V-8 Models with 4-Barrel Carburetor)*

(1) Assemble exhaust system loosely to permit proper alignment (Figs. 1, 2, 4, 5, 6,7 , 8, 9 and 10).

(2) Connect exhaust pipe to exhaust manifolds, using new gaskets, where required. Tighten exhaust pipe attaching bolt nuts to 35 foot-pounds. On systems using the ball joint seating connection at the exhaust manifold, do not tighten attaching bolt nuts at this time.

(3) Adjust supports to provide proper underbody clearance and clearance with adjacent parts. **Do not fully tighten attaching bolts and screws at this time.**

(4) Tighten all slip joint clamp bolt nuts 100 inch-pounds, working from rear to front.

(5) Tighten all support attaching clamp screws to 95 inch-pounds, at same time maintaining proper clearance with adjacent parts.

(6) Tighten exhaust pipe ball joint connection bolt nuts 24 foot-pounds. When tightening nuts, alternate tightening between the bolts to insure parallelism of flanges.

### *Installation (Valiant V-8 Models with 4-Barrel Carburetor)*

(1) Assemble exhaust system (Fig. 3) loosely to permit proper alignment.

(2) **Do not** tighten ball joint connection bolts at exhaust manifolds at this time.

(3) Tighten exhaust pipe slip joint saddle U-bolt nuts to 100 inch-pounds.

(4) Adjust supports to provide proper underbody clearance and clearance with adjacent parts.

(5) Tighten rear muffler and tail pipe support bolts to 200 inch-pounds.

(6) Tighten front muffler support bolts and U-bolt nuts to 100 inch-pounds.

(7) Check alignment and tighten exhaust pipe ball joint connection bolt nuts to 24 foot-pounds. When tightening nuts, alternate tightening between bolts to insure parallelism of flanges.

MyMopar.com

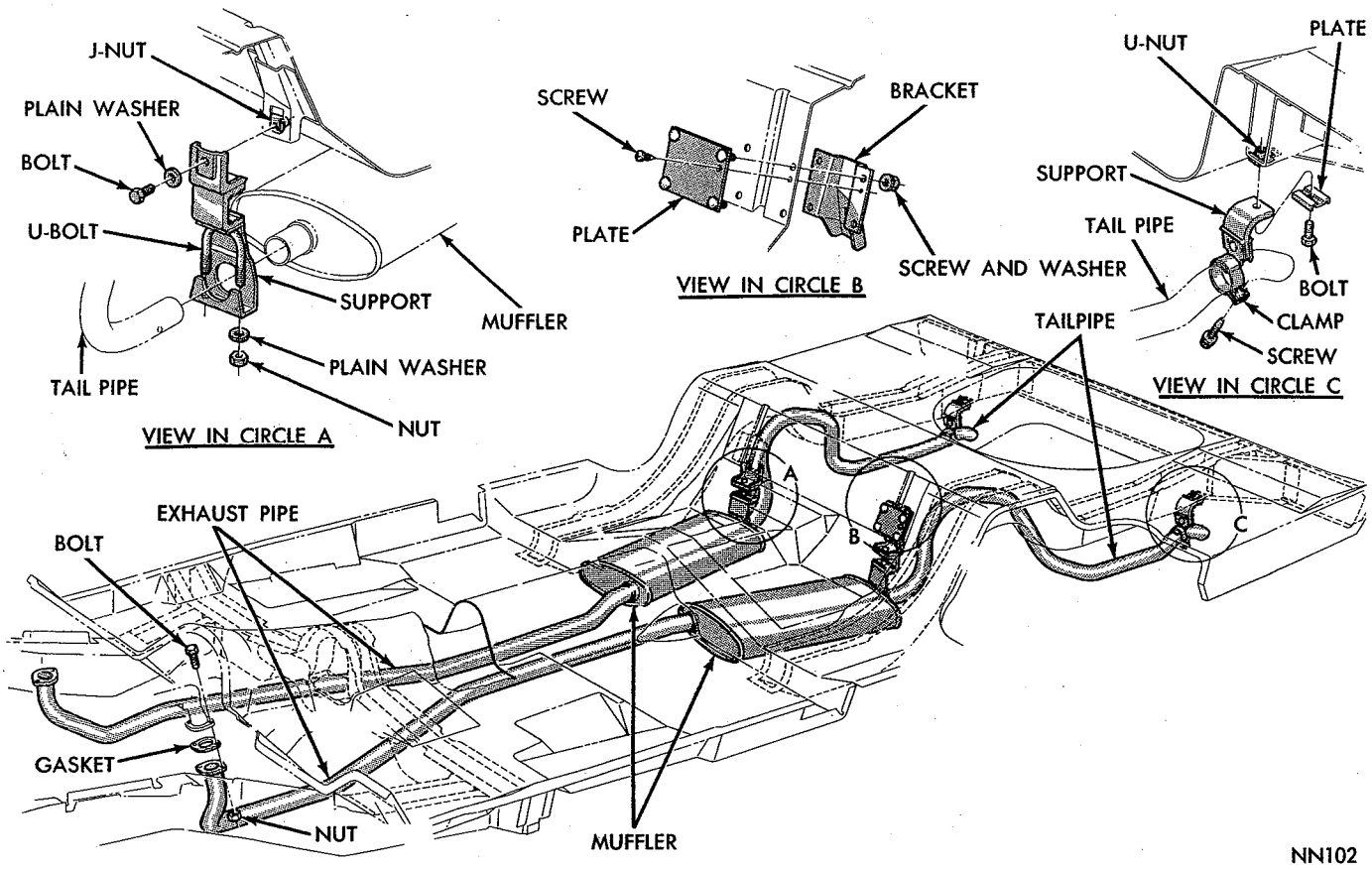


*Fig. 7—Exhaust System—Dual (Belvedere Models)*

## INTAKE AND EXHAUST MANIFOLD ASSEMBLY (6-Cyl. Engines)

### *Removal*

(1) Remove carburetor air cleaner. **If engine is equipped with closed type breather cap, disconnect hose at air cleaner intake tube.**

(2) Disconnect vacuum control tube at carburetor and distributor. Disconnect fuel line, crankcase ventilator or valve hose, automatic choke rod and throttle linkage at carburetor and remove carburetor.

(3) Disconnect exhaust pipe at exhaust manifold.

(4) Remove nuts and washers attaching manifold assembly to cylinder head and remove manifold (Fig. 11). Remove three screws securing intake manifold to exhaust manifold and separate manifolds.

### *Cleaning and Inspection*

(1) Discard gasket and clean all gasket surfaces on manifolds. Wash manifolds in solvent and dry with compressed air.

(2) Test mating surfaces of manifolds for parallelism with a straightedge. Surfaces should be flat within .008 inch.

(3) Inspect manifolds for cracks or distortion.

(4) Test operation of manifold heat control valve. If shaft is binding, apply a suitable manifold heat control valve solvent, as outlined in "Manifold Heat Control Valve," page 6.

### *Installation*

(1) Install a new gasket between the two manifolds and install the three long screws securing the manifolds (Fig. 11). **Do not tighten the screws at this time.**

(2) Position manifold assembly on cylinder head, using a new gasket. Install triangular washers and nuts on upper studs and on the four lower studs opposite numbers 2 and 5 cylinders. The eight triangular washers should be positioned squarely on machined surfaces of both intake and exhaust manifold retaining pads. These washers must be installed with **cup sides against manifold. Install nuts and washers only when engine is cold.**

(3) Install steel conical washers with cup side to manifold, one on center upper stud and two on center lower studs. Install brass washers at each end with flat side to manifold. Install nuts with flat side away from washer. Tighten nuts to 10 foot-pounds.

**CAUTION: Do not over-tighten.**

(4) Tighten three screws securing intake manifold to exhaust manifold to 15 foot-pounds, starting with the **inner** screw.

(5) Attach exhaust pipe to manifold flange, using a new gasket and tighten bolt nuts to 35 foot-pounds.

MyMopar.com

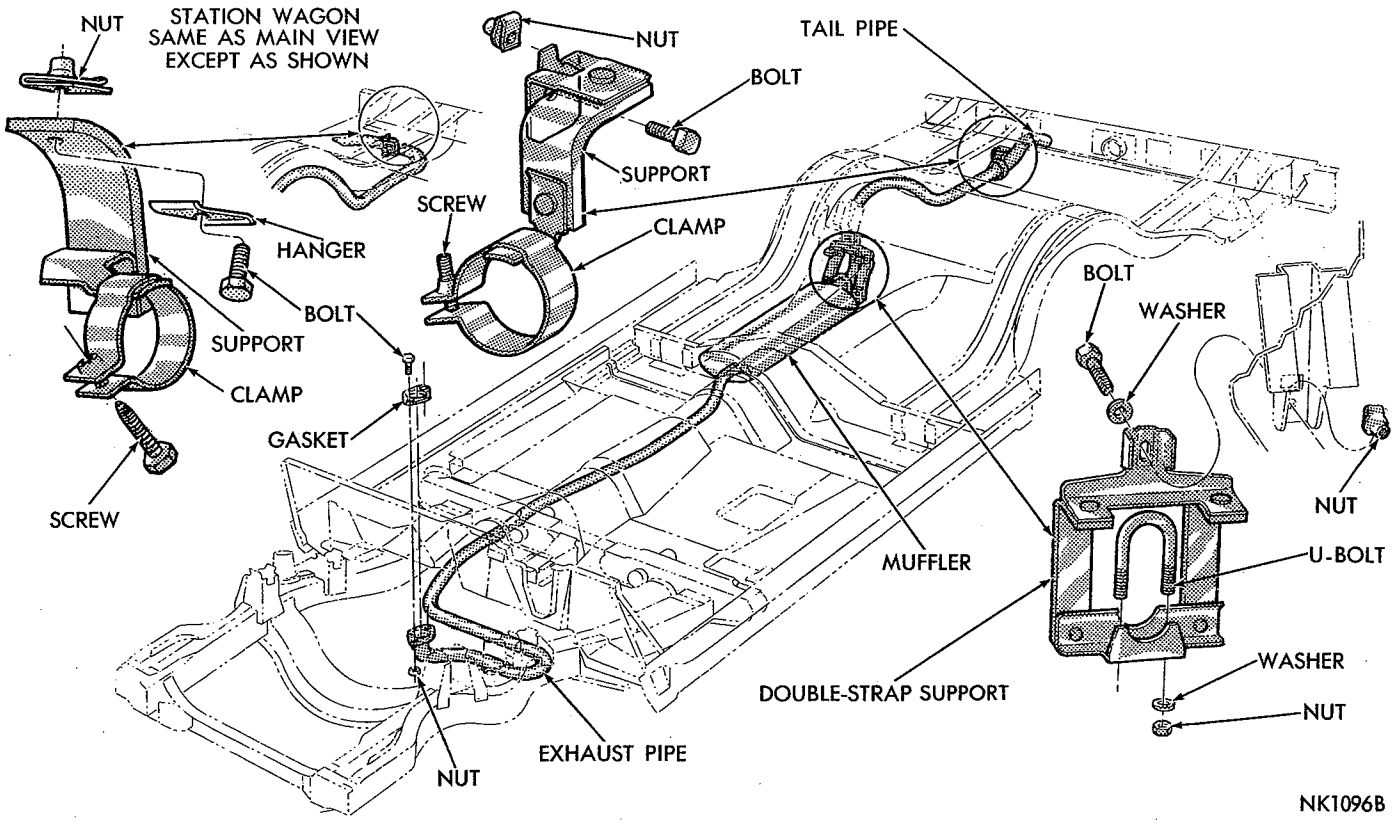


***Fig. 8—Exhaust System (Fury 6-Cyl.)***

(6) Install carburetor and connect automatic choke rod and throttle linkage. Assemble crankcase ventilator or valve hose, vacuum control tube and fuel line to carburetor. Install carburetor air cleaner, and connect closed breather cap hose to air cleaner inlet tube, if used.

## INTAKE MANIFOLD (273 Cu. In. Engine)

**NOTE: Remove intake manifold as outlined in Group 9, "Engine."**

### *Servicing*

(1) Clean manifold in solvent and blow dry with compressed air. Inspect manifold for cracks.

(2) Inspect mating surfaces of manifold for parallelism with a straightedge.

(3) Inspect exhaust crossover passages through manifold (Fig. 12). If passages are coated with hard, black carbon, they should be scraped clean and sandblasted to remove the carbon deposits.

(4) Install intake manifold, using new gaskets. Tighten manifold screws to 35 foot-pounds.

## EXHAUST MANIFOLD (273 Cu. In. Engine)

### *Removal*

(1) Remove bolts and nuts attaching exhaust pipe to manifold. **On left hand manifold,** remove bolt, nut and washer attaching the two manifold braces.

(2) Remove bolts, nuts and washers attaching manifolds to cylinder heads. Remove manifolds from cylinder heads.

### *Cleaning and Inspection*

(1) Clean gasket surfaces on cylinder heads and manifolds, wash with solvent and blow dry with compressed air. Inspect manifolds for cracks.

(2) Inspect mating surfaces of manifold for parallelism with a straightedge. Gasket surfaces must be flat within .008 inch.

(3) On right hand manifold test the manifold heat control valve for free operation. If necessary to free up, apply a suitable manifold heat control valve solvent to both ends of the valve shaft. Be sure manifold is COOL and solvent allowed to soak a few minutes to dissolve the deposits. Then, work valve back and forth until it turns freely. A suitable solvent is available under Part Number 1879318, Manifold Heat Control Valve Solvent.

### *Installation*

**NOTE: If studs came out with the nuts, install new studs, applying sealer on the coarse thread ends. If this precaution is not taken, water leaks may develop at the studs.**

(1) Position two outboard arms of manifolds on the two studs on cylinder heads, using new gaskets. In-

MyMopar.com

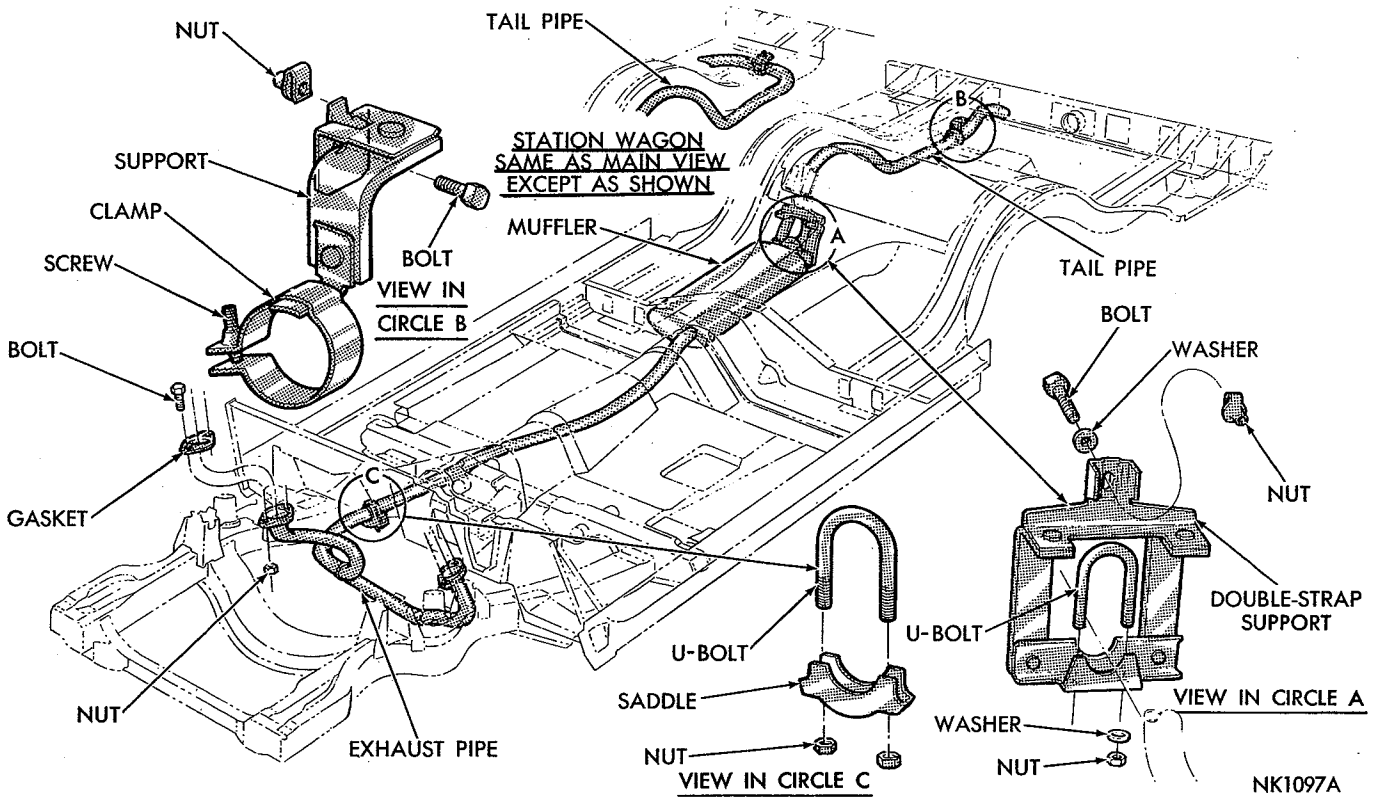


***Fig. 9—Exhaust System (Fury 8 Cyl., "A" Engine)***

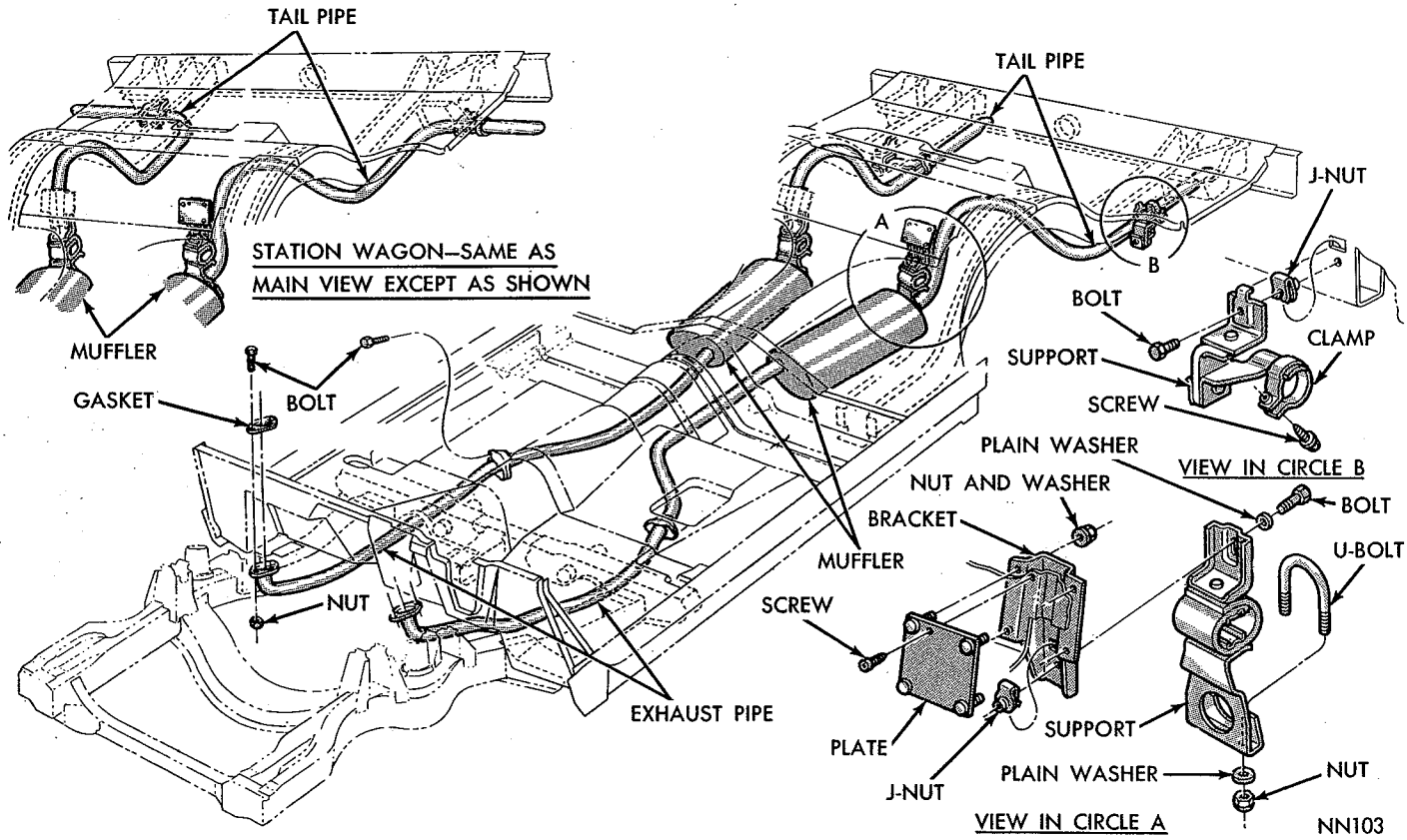


***Fig. 10—Exhaust System—Dual (Fury 8 Cylinder)***

MyMopar.com

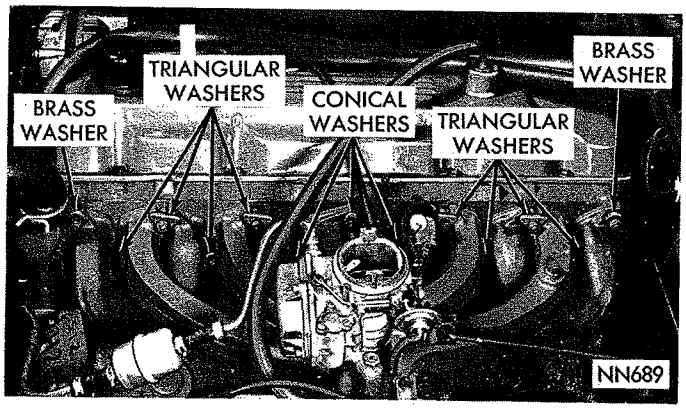


*Fig. 11—Manifold Assembly (6-Cylinder)*

stall conical washers and nuts on studs (Fig. 13).

(2) Install two screws and conical washers at inner ends of outboard arms of manifold. Install two screws **without** washers on center arm of manifold (Fig. 13). Tighten screws and nuts, starting at center arm and working outward, to 15 foot-pounds.

(3) Assemble exhaust pipe to manifold, and secure with bolts, nuts and washers. Tighten nuts to 35 foot-pounds. **On the left hand manifold,** attach the two braces to the manifold with bolt, nut and washer. Tighten nut to 30 foot-pounds.

## INTAKE MANIFOLD (318, 361, 383 and 426 Cu. In. Engines)

**Remove Intake Manifold as outlined in Group 9**

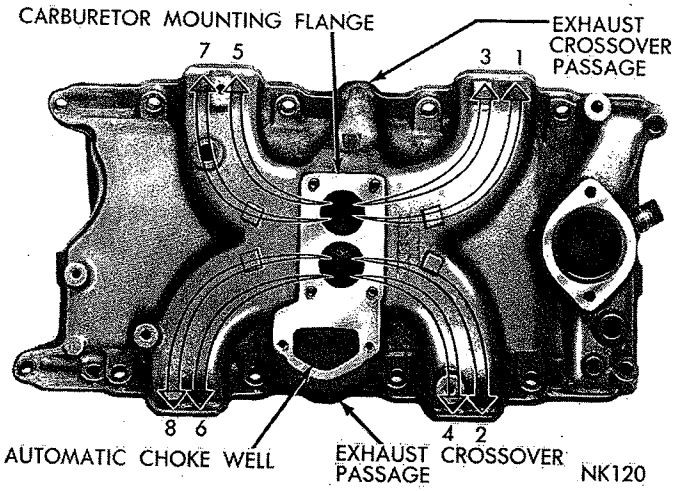


*Fig. 12—Intake Manifold (273 Cu. In. Engine)*

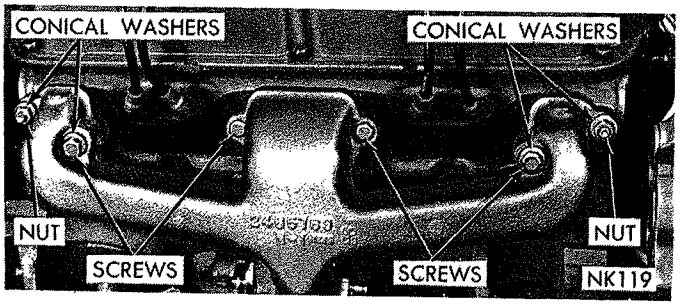


*Fig. 13—Installing Exhaust Manifold (273 Cu. In. Engine)*

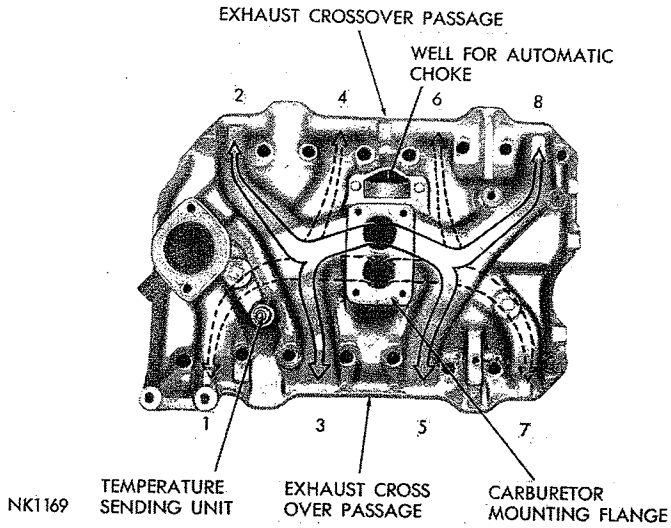


*Fig. 14—Intake Manifold (318 Cu. In. Engine)*

**"Engine."**

### *Servicing*

(1) Clean manifold (Fig. 14 or 15) in solvent and blow dry with compressed air.

(2) Inspect exhaust crossover passages and pressure test for any leakage into the intake passages.

(3) Inspect mating surfaces for parallelism.

(4) Use new gaskets when installing manifold. Reinstall manifold as outlined in Group 9, "Engine."

## EXHAUST MANIFOLD (318, 361, 383 and 426 Cu. In. Engines)

### *Removal*

(1) Disconnect spark plug cables.

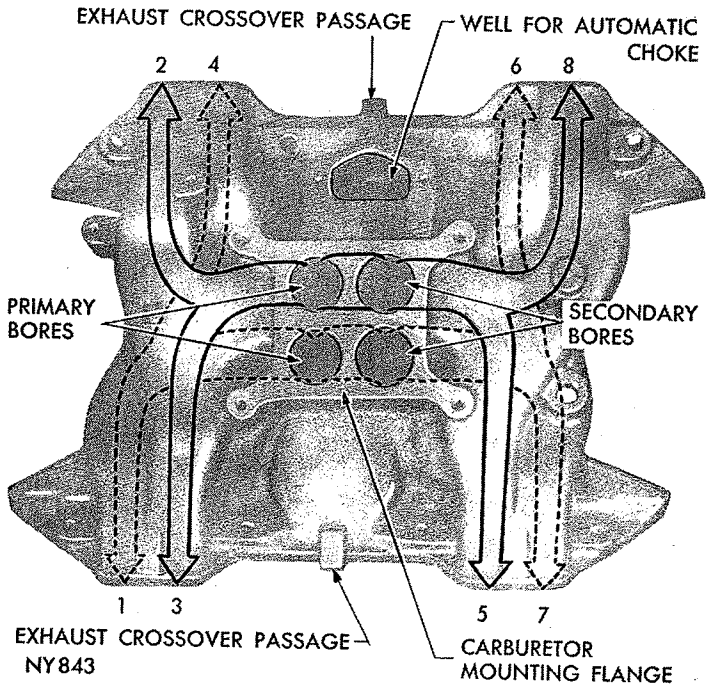


*Fig. 15—Intake Manifold (383 and 426 Cu. In. Engines)*

MyMopar.com

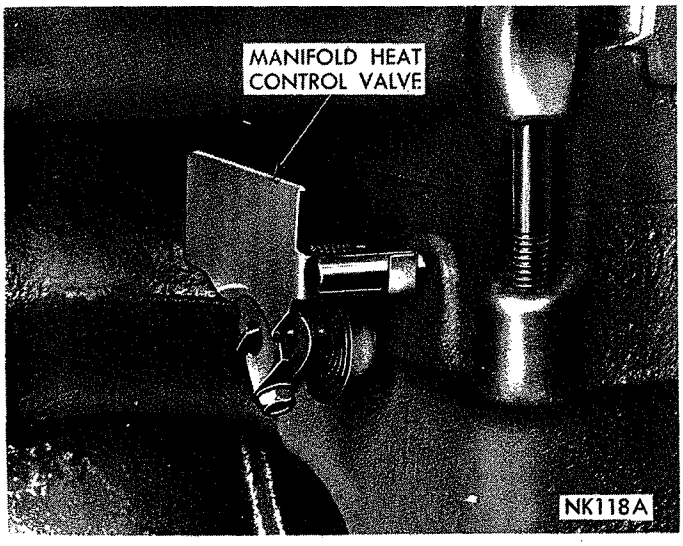


*Fig. 16—Manifold Heat Control Valve (170 and 225 Cu. In. Engines)*

(2) Remove alternator.
(3) Disconnect exhaust pipe at exhaust manifolds.
(4) Remove stud nuts attaching exhaust manifolds to cylinder heads. Slide manifolds off studs and away from cylinder heads.

### Cleaning and Inspection

(1) Clean manifolds in solvent and blow dry with compressed air.
(2) Inspect manifolds for cracks and distortion.
(3) On right hand manifold test manifold heat control valve for free operation. If necessary to free up, apply a suitable manifold heat control valve solvent to both ends of valve shaft. Be sure manifold is COOL and solvent allowed to soak a few minutes to dissolve deposits. Then, work valve back and forth until it turns freely. A suitable solvent is available under Part Number 1879318, Manifold Heat Control Valve Solvent.

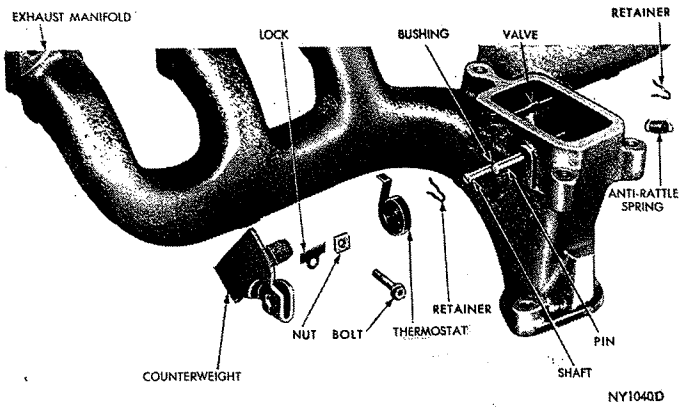


*Fig. 17—Manifold Heat Control Valve (170 and 225 Cu. In. Engines)*

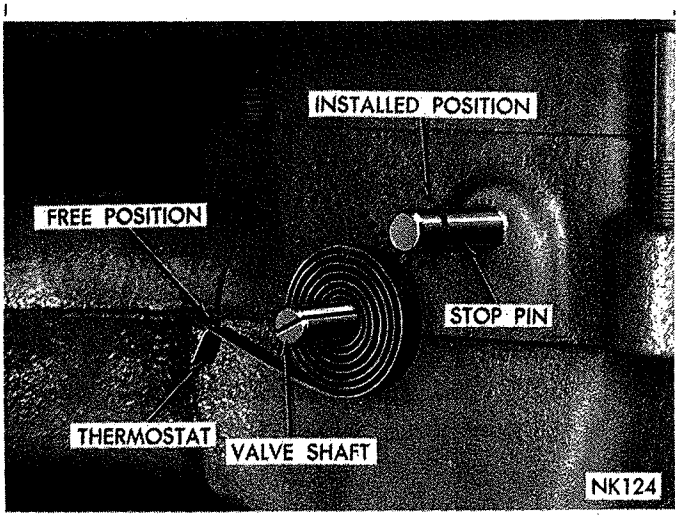


*Fig. 18—Installing Thermostat (170 and 225 Cu. In. Engines)*

### Installation

**If studs come out with the nuts, install new studs, applying sealer on the coarse thread ends. If this precaution is not taken, water leaks may develop at the studs.**

(1) **318 Cu. In. Engine**—Install manifolds using new gaskets. Tighten stud nuts to 30 foot-pounds.
(2) **361, 383 and 426 Cu. In. Engines**—Install manifolds on cylinder heads. No gaskets are required. Tighten stud nuts to 30 foot-pounds.
(3) Install alternator and adjust belt tension.
(4) Attach spark plug cables to spark plugs.

## MANIFOLD HEAT CONTROL VALVE (170 and 225 Cu. In. Engines)

### Servicing

Operation of the manifold heat control valve (Fig. 16), should be inspected periodically. With the engine idling, accelerate momentarily to wide open **throttle.**

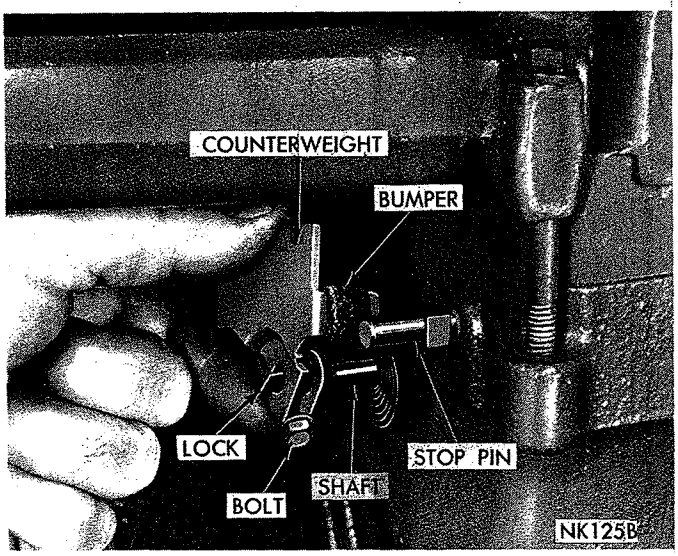


*Fig. 19—Installing Counterweight (170 and 225 Cu. In. Engines)*

MyMopar.com

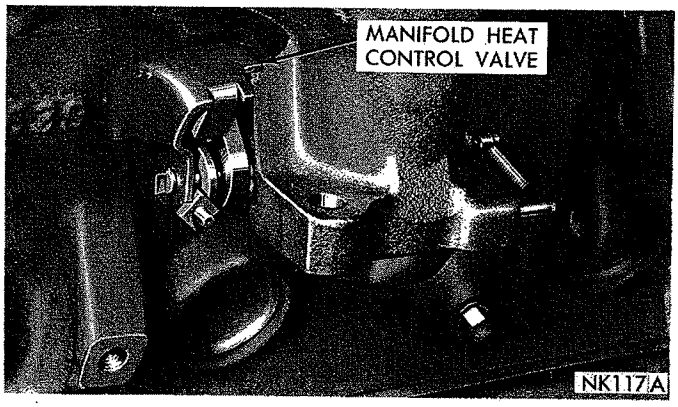


*Fig. 20—Manifold Heat Control Valve (273 Cu. In. Engines)*

The counterweight should respond by moving counterclockwise approximately ½ inch and return to its original position. If no movement is observed, the shaft is binding due to accumulation of deposits or the thermostat is weak or broken.

The application of a suitable manifold heat control valve solvent, every six months, to both ends of the manifold heat control valve shaft at the bushings, will keep the valve working freely. The solvent should be applied when the engine is **COOL** and allowed to soak a few minutes to dissolve the deposits. Then, work the valve back and forth until it turns freely. A suitable solvent is available under Part Number 1879318, Manifold Heat Control Valve Solvent.

### Removal

(1) Remove counterweight and lock from end of shaft by loosening clamp bolt (Fig. 17).

(2) Unhook thermostat from stop pin and remove from valve shaft slot.

### Cleaning and Inspection

Move valve shaft back and forth and test operation. If the shaft is binding in the manifold, apply a suitable manifold heat control valve solvent to dissolve the deposits, as outlined on page 10.

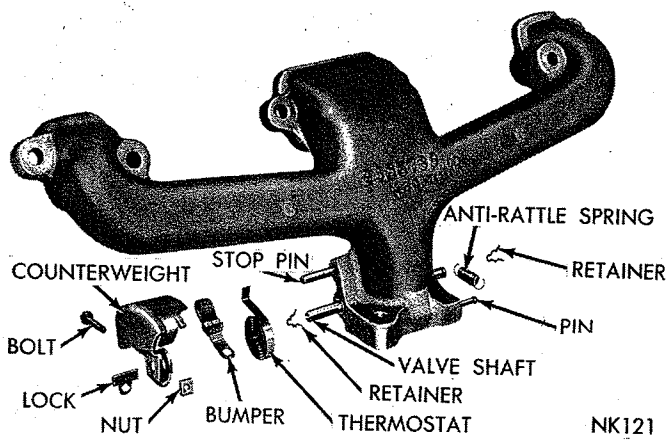


*Fig. 21—Manifold Heat Control Valve (273 Cu. In. Engines)*

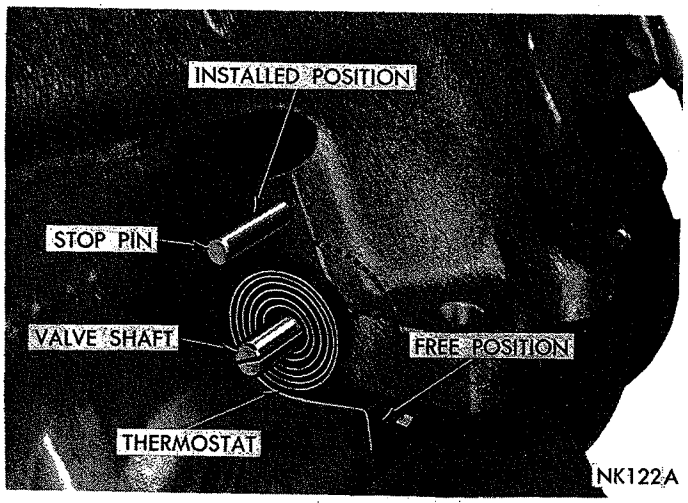


*Fig. 22—Installing Thermostat (273 Cu. In. Engine)*

Examine bumper stop on counterweight. If damaged, replace with a new one.

### Installation

(1) Place shaft in the extreme **clockwise** position. Place a new thermostat in shaft slot (Fig. 18) and position it with outer end in lower left hand position.

(2) Wrap outer end of thermostat **clockwise** and engage it under stop pin.

(3) Place counterweight on shaft, with shield in the upward position and insert lock in shaft slot (Fig. 19).

(4) Center counterweight on shaft and turn shaft **counterclockwise** until bumper passes stop pin.

(5) Press counterweight on shaft until it is seated. Tighten clamp bolt to 50 inch-pounds with C-3380 Torque Wrench.

(6) Make sure anti-rattle spring is in place on opposite end of shaft. Test operation of valve.

## MANIFOLD HEAT CONTROL VALVE (273 Cu. In. Engine)

### Servicing

Operation of the manifold heat control valve (Fig. 20) should be inspected periodically. With engine

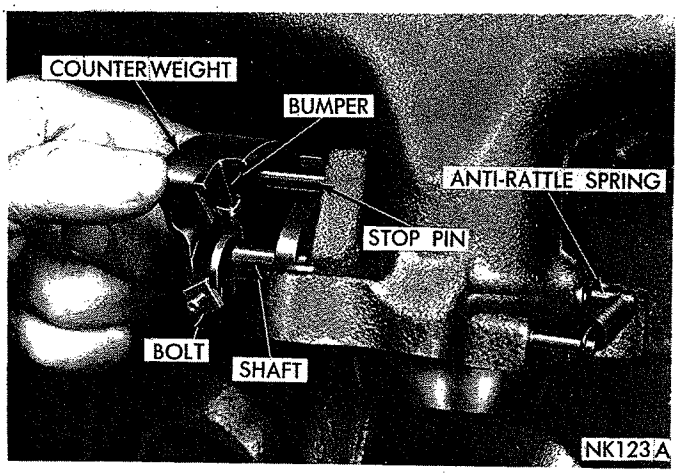


*Fig. 23—Installing Counterweight (273 Cu. In. Engine)*

MyMopar.com

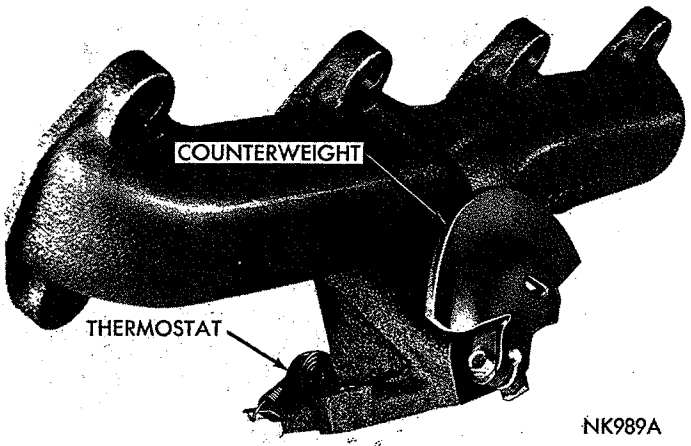


*Fig. 24—Manifold Heat Control Valve (318 Cu. In. Engine)*

idling, accelerate momentarily to wide open throttle. The counterweight should respond by moving clockwise approximately ½ inch and return to its original position. If no movement is observed, the shaft is binding due to accumulation of deposits or the thermostat is weak or broken.

The application of a suitable manifold heat control valve solvent, every six months, to both ends of the manifold heat control valve shaft at the bushings, will keep the valve working freely. The solvent should be applied when the engine is **COOL** and allowed to soak a few minutes to dissolve the deposits. Then, work the valve back and forth until it turns freely. A suitable solvent is available under Part Number 1879318, Manifold Heat Control Valve Solvent.

### Removal

(1) Remove counterweight, lock and bumper from end of shaft by loosening clamp bolt (Fig. 21).

(2) Unhook thermostat from stop pin and remove from valve shaft slot.

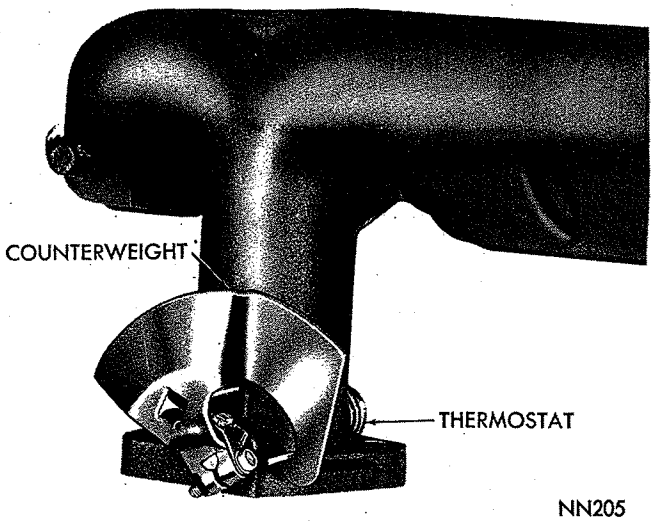


*Fig. 25—Manifold Heat Control Valve (361, 383 and 426 Cu. In. Engines)*

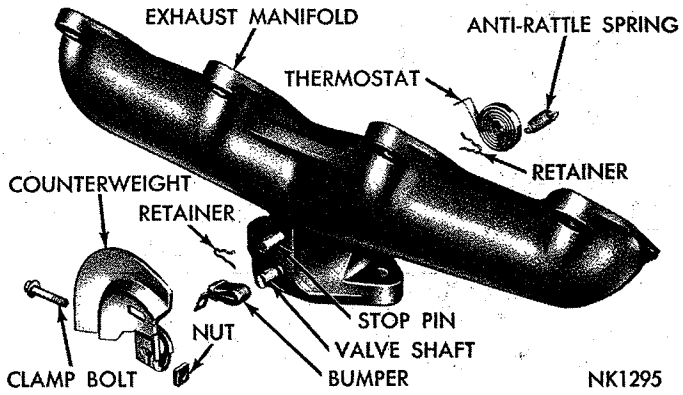


*Fig. 26—Manifold Heat Control Valve (318 Cu. In. Engine)*

### Cleaning and Inspection

Move valve shaft back and forth and test operation. If the shaft is binding in the manifold, apply a suitable manifold heat control valve solvent to dissolve the deposits, as outlined on page 11.

### Installation

(1) Turn shaft to extreme **counterclockwise** position.

(2) Install a new thermostat in shaft slot (Fig. 22) and position with the outer end in the lower right hand position.

(3) Wrap outer end of thermostat **counterclockwise** and engage under stop pin.

(4) Place counterweight on shaft with shield in **downward** position and insert lock in shaft slot (Fig. 23).

(5) Center counterweight on shaft and turn **clockwise** until bumper passes stop pin (Fig. 23).

(6) Press counterweight on shaft until seated. Tighten clamp bolt 50 inch-pounds with C-3380 Torque Wrench.

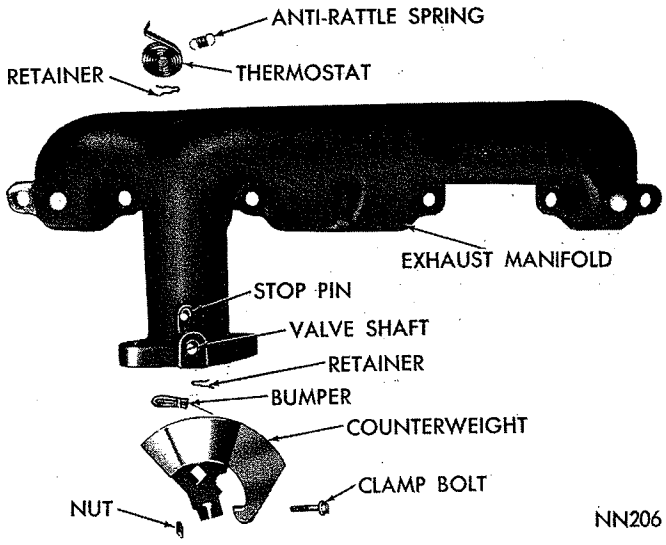


*Fig. 27—Manifold Heat Control Valve (361, 383 and 426 Cu. In. Engines)*

MyMopar.com

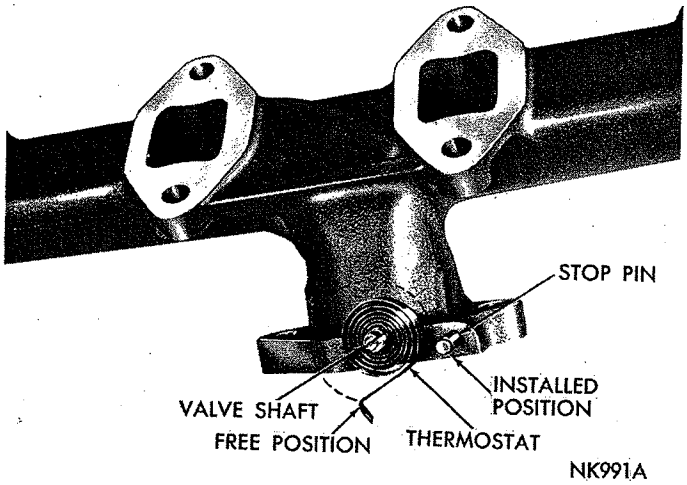


*Fig. 28—Installing Thermostat (318 Cu. In. Engine)*

(7) Make sure anti-rattle spring on opposite end of shaft is in place. Test operation of valve for freedom of movement.

## MANIFOLD HEAT CONTROL VALVE (318, 361, 383 and 426 Cu. In. Engines)

### Servicing

Operation of the manifold heat control valve (Figs. 24 and 25), should be inspected periodically. With the engine idling, accelerate momentarily to wide open throttle.

The counterweight on 318 cubic inch engines should respond by moving **clockwise** approximately ½ inch and return to its original position. On **361, 383** and **426** cubic inch engines, the counterweight should move **counterclockwise.** If no movement is observed, the shaft is binding due to accumulation of deposits or the thermostat is weak or broken.

The application of a suitable manifold heat control valve solvent, every six months, to both ends of the manifold heat control valve shaft at the bushings, will keep the valve working freely. The solvent should be applied when the engine is **COOL** and allowed to soak

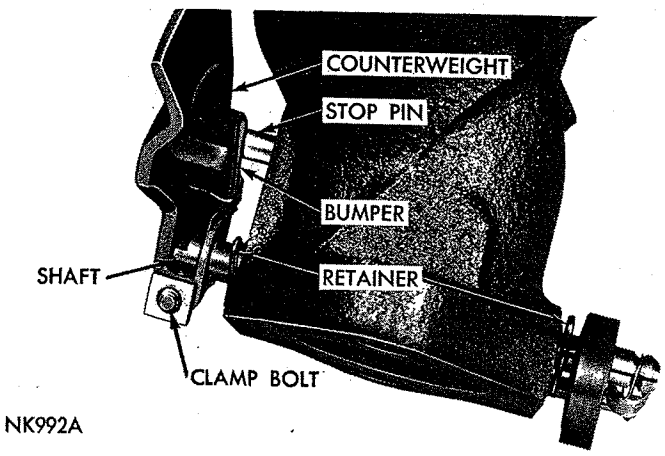


*Fig. 29—Installing Counterweight (318 Cu. In. Engine)*

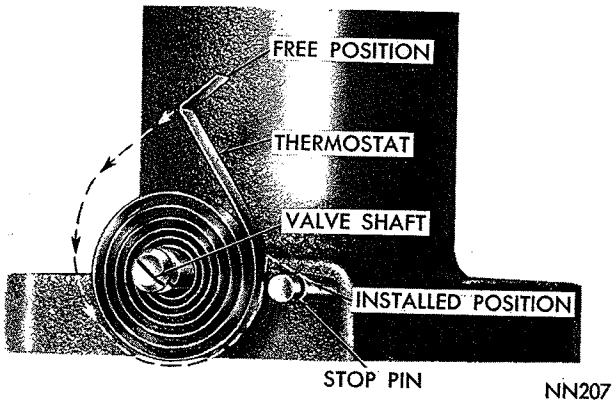


*Fig. 30—Installing Thermostat (361, 383 and 426 Cu. In. Engines)*

a few minutes to dissolve the deposits. Then, work the valve back and forth until it turns freely. A suitable solvent is available under Part Number 1879318, Manifold Heat Control Valve Solvent.

### Removal

The counterweight and the thermostat, being located on opposite ends of the valve shaft, can be serviced individually without the necessity for complete disassembly.

### Counterweight-Removal (All Models)

(1) Remove counterweight and bumper from outer end of valve shaft by loosening clamp bolt (Fig. 26 or 27).

### Thermostat—Removal (All Models)

(1) To remove thermostat on the inner end of valve shaft, first remove anti-rattle spring (Figs. 26 or 27).

(2) Unhook thermostat from stop pin and slide from valve shaft.

### Cleaning and Inspection

Move valve shaft back and forth and test operation. If the shaft is binding in the manifold, apply a suitable solvent to dissolve the deposits, as outlined on page 13.

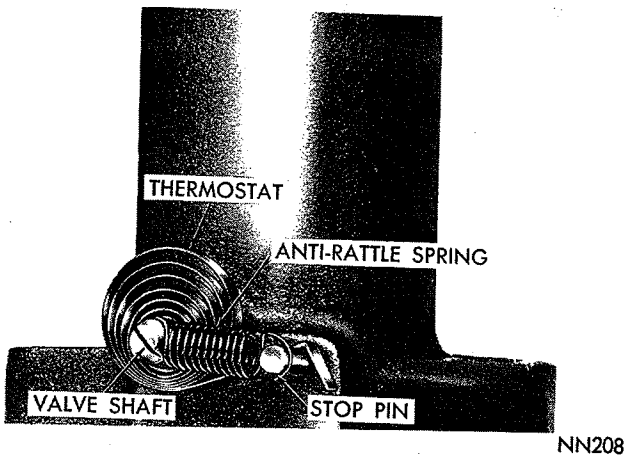


*Fig. 31—Thermostat Installed (361, 383 and 426 Cu. In. Engines)*

MyMopar.com

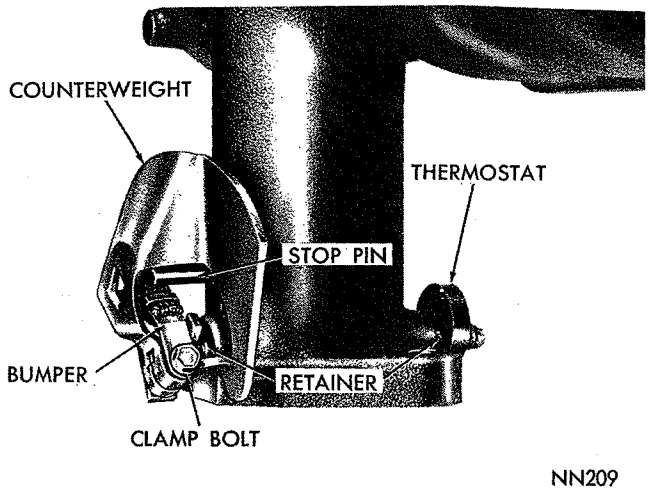


***Fig. 32—Installing Counterweight (361, 383 and 426 Cu. In. Engines)***

If fabric on bumper is worn, install a new bumper.

### *Thermostat—Installation (318 Cu. In. Engine)*

(1) Be sure shaft retainer is in place on inner end of valve shaft. Then, turn valve shaft in the extreme counterclockwise position.

(2) Install a new thermostat in slot in inner end of shaft (Fig. 28) with outer end of thermostat in lower right hand position, as viewed from the right hand side of the engine. Press inner end of thermostat into shaft and seat firmly.

(3) Wrap outer end of thermostat counterclockwise, as viewed from right hand side of engine, and engage under stop pin (Fig. 28).

(4) Install anti-rattle spring on end of pin and end of valve shaft. Make sure it does not interfere with thermostat.

### *Counterweight—Installation (318 Cu. In. Engine)*

(1) Be sure shaft retainer is in place on outer end of valve shaft (Fig. 29).

(2) Install counterweight and bumper on outer end of valve shaft. The bumper should be located on the left hand side of the hub section of counterweight and on the right hand side of the stop pin (Fig. 29).

(3) Tighten clamp bolt to 50 inch-pounds with C-3380 Torque Wrench. Test operation of valve for freedom of movement.

### *Thermostat—Installation (361, 383 and 426 Cu. In. Engines)*

(1) Be sure shaft retainer is in place on inner end of valve shaft. Then, turn valve shaft in the extreme clockwise position.

(2) Install a new thermostat in slot in inner end of shaft (Fig. 30) with outer end in upper left hand position, as viewed from right hand side of engine. Press inner end of thermostat into shaft and seat firmly.

(3) Wrap outer end of thermostat clockwise, as viewed from right hand side of engine, and engage over stop pin.

(4) Install anti-rattle spring on end of stop pin and end of valve shaft. Make sure it does not interfere with thermostat (Fig. 31).

### *Counterweight Installation (361, 383 and 426 Cu. In. Engines)*

(1) Be sure shaft retainer is in place on outer end of valve shaft.

(2) Install counterweight and bumper on outer end of valve shaft. The bumper should be located on the right hand side of the hub section of the counterweight and on the left hand side of the stop pin (Fig. 32).

(3) Tighten clamp bolt to 50 inch-pounds with C-3380 Torque Wrench. Test operation of valve for freedom of movement.

## MANIFOLD HEAT CONTROL VALVE REPLACEMENT

### *Removal*

(1) Remove alternator.

(2) Remove exhaust pipe from manifold.

(3) Remove exhaust manifold from engine.

(4) Remove counterweight, thermostat, shaft retainers and anti-rattle spring.

(5) Cut valve plate off shaft.

(6) Remove shaft and press bushings from manifold.

### *Installation*

(1) Install new bushings in exhaust manifold.

(2) Install shaft in manifold and check for freedom of movement. If shaft fails to turn freely, it will be necessary to hone the bushings to shaft size.

(3) Pull shaft out far enough to position the valve plate on the shaft, then slide shaft into position in both bushings.

(4) Align hole in valve plate with hole in shaft and insert a drift into both holes to maintain correct positioning of valve plate as it is being welded to shaft.

(5) Remove drift from valve plate and shaft.

(6) Install new thermostat anti-rattle spring, shaft retainers and counterweight assembly on shaft.

(7) Install manifold on engine assembly.

(8) Attach exhaust pipe to manifold, using a new gasket where required.

(9) Install alternator and adjust belt tension.

(10) Start engine and test operation of manifold heat control valve assembly.

### *Servicing*

Test the manifold heat control valve for proper operation during engine tune-up and apply a suitable solvent to both ends of valve shaft to dissolve the deposits, as outlined on page 13.

MyMopar.com

# TIGHTENING REFERENCE

| | 6-Cylinder | | 8-Cylinder | |
|---|---|---|---|---|
| | Ft. Lbs. | In. Lbs. | Ft. Lbs. | In. Lbs. |
| Exhaust Manifold Brace Bolt Nut | | | 30 | |
| Exhaust Manifold to Cylinder Head Stud Nuts | | | | |
| (All except 273 Cu. In. Engine) | 10 | | 30 | |
| 273 Cu. In. Engine | | | 15 | |
| Exhaust Pipe Ball Joint Bolts | | | 24 | |
| Exhaust Pipe U-Bolt Nuts | | 150 | | 150 |
| Exhaust Pipe Flange Bolt Nuts | 35 | | 35 | |
| Heat Control Valve Counterweight Clamp Bolt Nut | | 50 | | 50 |
| Intake Manifold to Cylinder Head Screws | 10 | | | |
| 273 Cu. In. Engine | | | 35 | |
| 318 Cu. In. Engine | | | 35 | |
| Intake to Exhaust Manifold Screws | 15 | | | |
| Rear Muffler Support Bolts and Nuts | | | | 200 |
| Rear Muffler Support to Underbody Bolt | | 200 | | 200 |
| Support Clamp Screws | | 95 | | 95 |
| Tail Pipe Support to Underbody Bolt | | 200 | | 200 |

MyMopar.com

MyMopar.com

# FUEL SYSTEM

## CONTENTS


| | Page |
|---|---|
| SERVICE DIAGNOSIS | 2 |
| BBS—SERIES CARBURETORS | 13 |
| BBD—SERIES CARBURETORS | 42 |
| BBD (1¼") SERIES CARBURETOR | 23 |
| HOLLEY CARBURETOR | 5 |
| WW3—SERIES CARBURETORS | 32 |
| AFB—SERIES CARBURETORS | 61 |
| FUEL PUMPS | 72 |
| FUEL TANKS | 74 |
| THROTTLE LINKAGE | 81 |
| WWC3 SERIES CARBURETOR | 51 |
| SPECIFICATIONS | 86 |
| DISTRIBUTOR CONTROL VALVE ADJUSTMENT | 71 |


## GENERAL INFORMATION

The fuel system consists of the fuel tank, fuel pump, fuel filter, carburetor, fuel lines and vacuum lines. (See Figure 1.)

The fuel tank assembly consists of the tank, filler neck cap, air vent, and a fuel gauge sending unit.

In operation, the fuel pump draws fuel from the tank and forces it to the filter and carburetor. The carburetor meters the fuel into the air stream drawn into the engine, in quantities suitable for all engine speed and load conditions.

The fuel filter for 1966 is a paper element sealed, disposable type unit, located in the fuel line between the fuel pump and the carburetor. The filter unit should be replaced every 16,000 miles.

When checking parts removed from the carburetor, it is at times difficult to be sure they are satisfactory for further service. It is therefore recommended that in such case, NEW parts be installed.

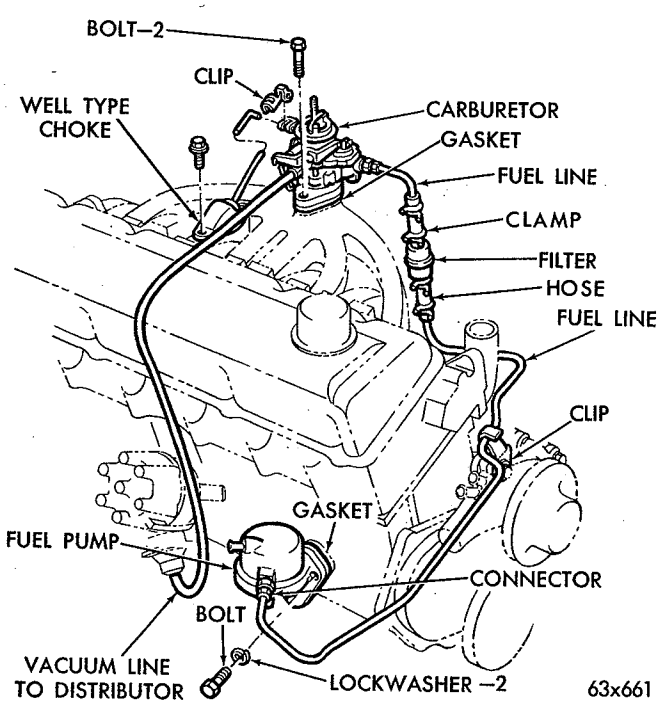


*Fig. 1—Fuel System (Engine Compartment)*

## SERVICING THE CARBURETORS

Often, the carburetor is blamed for a great variety of trouble which is classed as "POOR CAR PERFORMANCE." Therefore, be definitely sure that the trouble is not located elsewhere before disassembling the carburetor.

When overhauling the carburetor, several items of importance should be observed to assure a good job:

(1) The carburetor must be completely disassembled.

(2) All parts (except the choke diaphragm assembly) should be cleaned in a suitable solvent then inspected for damage or wear.

(3) Use air pressure only, to clean the various orifices or channels.

(4) Replace questionable parts with NEW ONES.

## CLEANING CARBURETOR PARTS

The recommended solvent for gum deposits is denatured alcohol which is easily obtainable. However, there are other commercial solvents which may be used with satisfactory results.

The choke diaphragm can be damaged by solvents. Avoid placing the diaphragm assembly in **ANY** liquid. Clean the external surfaces with a clean cloth or a soft wire brush. Shake dirt or other foreign material from the stem (plunger) side of the diaphragm. Depressing the stem to the retracted position, will provide an additional hole for the removal of dirt. Compressed air can be used to remove loose dirt **but should not be connected to the vacuum diaphragm fitting.**

**IMPORTANT: If the commercial solvent or cleaner recommends the use of water as a rinse, it should be "HOT." After rinsing, all trace of water must be blown from the passages with air pressure. It is further advisable to rinse all parts in clean kerosene or gasoline to be certain no trace of moisture remains. Never clean jets with a wire, drill, or other mechanical means, because the orifices may become enlarged, making the mixture too rich for proper performance.**

MyMopar.com

## AUTOMATIC CHOKE—WELL TYPE

To function properly, it is important that all parts be clean and move freely. Other than an occasional cleaning, the choke requires no servicing. However, it is very important that the choke control unit work freely in the well and at the choke shaft. Move the choke rod up and down to check for free movement in the pivot. If the unit binds, a new choke unit should be installed. **The well type choke is serviced as an assembly. Do not attempt to repair or change the setting, unless authorized by service literature. Changes of the choke materially affect summer temperature cold starting and seldom are a satisfactory correction of driveability problems, which are generally associated with carburetors or vacuum diaphragms.**

When installing the well type choke unit, be certain that the coil housing does not contact the sides of the well in the exhaust manifold. Any contact at this point will affect choke operation. DO NOT lubricate any parts of the choke or the control unit. This causes an accumulation of dirt which will result in binding of the mechanism.

## CLOSED CRANKCASE VENT SYSTEM

The closed crankcase ventilator valve is located in the crankcase vent tube cap and is connected to the carburetor throttle body via a rubber tube.

The function of the valve is to regulate the flow of unburned hydrocarbons from the crankcase and return them to the intake manifold. From here they enter the combustion chamber and then exist via the exhaust system as completely burned exhaust products.

For servicing procedures of this valve, refer to Engine Section of this Manual.

## SERVICE DIAGNOSIS

| Condition | Possible Cause | Correction |
|---|---|---|
| **POOR IDLING** | (a) Idle air bleed carbonized or of incorrect size. | (a) Disassemble the carburetor. Then, use compressed air to clear idle bleed after soaking it in a suitable solvent. |
| | (b) Idle discharge holes plugged or gummed. | (b) Disassemble the carburetor. Then, use compressed air to clear idle discharge holes after soaking the main and throttle bodies in a suitable solvent. |
| | (c) Throttle body carbonized or worn throttle shaft. | (c) Disassemble the carburetor. Check the throttle valve shaft for wear. If excessive wear is apparent, replace the throttle body assembly. |
| | (d) Damaged or worn idle mixture needle. | (d) Replace the worn or damaged idle needle. Adjust the mixture. |
| | (e) Low grade fuel or incorrect float level. | (e) Test the fuel level in the carburetor. Adjust as necessary to obtain the correct float level. |
| | (f) Loose main body to throttle body screws. | (f) Tighten the main body to throttle body screws securely to prevent air leaks and cracked housings. |
| | (g) Worn or corroded needle valve and seat. | (g) Clean and inspect the needle valve and seat. If found to be in questionable condition, replace assembly. Then, test fuel pump pressure. Refer to Specifications for correct fuel pump pressure. |
| **POOR ACCELERATION** | (a) Accelerator pump piston (or plunger) leather too hard, worn, or loose on stem. | (a) Disassemble the carburetor. Replace accelerator pump assembly if leather is hard, cracked or worn. Test follow-up spring for compression. |
| | (b) Faulty accelerator pump discharge ball. | (b) Disassemble the carburetor. Use compressed air to clean the discharge nozzle and channels after soaking the main body in a suitable solvent. Test the fuel pump capacity. |
| | (c) Faulty accelerator pump inlet check ball. | (c) Disassemble the carburetor. Check the accelerator pump inlet, check ball for poor seat or release. If part is faulty, replace. |

MyMopar.com

| Condition | Possible Cause | Correction |
|---|---|---|
| | (d) Incorrect fuel or float level. | (d) Test the fuel or float level in the carburetor. Adjust as necessary to obtain the correct float level. |
| | (e) Worn accelerator pump and throttle linkage. | (e) Disassemble the Carburetor. Replace the worn accelerator pump and throttle linkage and measure for the correct position. |
| | (f) Manifold heat valve sticking. | (f) Free up manifold heat control valve, using recommended solvent. |
| **CARBURETOR FLOODS OR LEAKS** | (a) Cracked body. | (a) Disassemble the carburetor. Replace the cracked body. Make sure main to throttle body screws are tight. |
| | (b) Faulty body gaskets. | (b) Disassemble the carburetor. Replace the defective gaskets and test for leakage. Be sure the screws are tightened securely. |
| | (c) High float level. | (c) Test the fuel level in the carburetor. Make the necessary adjustment to obtain correct float level. |
| | (d) Worn needle valve and seat. | (d) Clean and inspect the needle valve and seat. If found to be in a questionable condition, replace the complete assembly and test the fuel pump pressure. Refer to specifications for correct fuel pump pressure. |
| | (e) Excessive fuel pump pressure. | (e) Test the fuel pump pressure. If the pressure is in excess of recommended pressure (refer to Specifications), replace fuel pump. |
| **POOR PERFORMANCE MIXTURE TOO RICH** | (a) Restricted air cleaner. | (a) Remove and clean the air cleaner. |
| | (b) Leaking float. | (b) Disassemble the carburetor. Replace leaking float. Test the float level and correct as necessary, to the proper level. |
| | (c) High float level. | (c) Adjust the float level as necessary to secure the proper level. |
| | (d) Excessive fuel pump pressure. | (d) Test the fuel pump pressure. Refer to specifications for recommended pressure. If pressure is in excess of recommended pressure, replace the fuel pump assembly. |
| | (e) Worn metering jet. | (e) Disassemble the carburetor. Replace the worn metering jet, using a new jet of the correct size and type. |
| **CARBURETOR MIXTURES LEAN** | (a) Air leak bypassing the carburetor. | (a) Repair. |
| | (b) Carburetor has economy metering system. | (b) Inform customer. |
| **ENGINE RUNS EXCESSIVELY RICH AFTER COLD START** | | |
| **CHOKE SYSTEM RICH** | (a) Choke thermostat adjustment richer than specified. | (a) Correct. |
| | (b) Choke thermostat distorted rich by overheating. | (b) Replace, since this problem can be corrected by use of proper choke assembly. |
| | (c) Choke vacuum diaphragm inoperative or misadjusted. | (c) Correct or replace. |
| | (d) Choke Vacuum passage blocked or leaking. | (d) Correct. |

MyMopar.com

| Condition | Possible Cause | Correction |
|---|---|---|
| **CARBURETOR RICH** | (a) Incorrect gasket or gasket installation between carburetor and intake manifold. | (a) Replace or correct. |
| **EXCESSIVE STALLS AFTER COLD START** | | |
| | (a) Choke System Lean. | (a) Check items under "Poor Starting—Choke Valve Fails to Close." |
| | (b) Choke vacuum diaphragm adjustment lean. | (b) Adjust to specification. |
| **ENGINE OUTPUT LOW** | (a) Fast idle speed low. | (a) Adjust to specification. |
| | (b) Fast idle cam position adjustment incorrect. | (b) Adjust to Specifications. |
| | (c) Engine lubrication oil of incorrect viscosity. | (c) Recommend 5W-20. |
| **CARBURETOR LEAN** | (a) Curb idle set very lean. | (a) Adjust. |
| | (b) Air leak bypassing the carburetor. | (b) Repair. |
| **POOR COLD ENGINE STARTING** | | |
| **INCORRECT PROCEDURE** | (a) Throttle must be opened to free choke system. Best position for all temperatures and all conditions is 1/3 open. (Standard Carburetors Only. CAP Carburetors require special procedures. See Owner's Manual.) | (a) Instruct owner. |
| **CHOKE VALVE FAILS TO CLOSE** | (a) Choke thermostat adjustment leaner than specified. | (a) Adjust. |
| | (b) Choke thermostat corroded such that it has cracked and distorted lean. | (b) Replace assembly. |
| | (c) Choke linkage, shaft or related parts corroded, bent or dirty such that the system is not entirely free to move from the open to the closed position. | (c) Repair, clean or replace. |
| | (d) Choke valve improperly seated. | (d) Reseat valve. |
| | (e) Air cleaner interferes with choke shaft or linkage. | (e) Rotate cleaner to correct position, instruct owner. |
| | (f) Air cleaner gasket interferes with choke valve or linkage. | (f) Reinstall gasket properly. |
| **LOW ENGINE OUTPUT (10°F or lower)** | (a) Engine lubricating oil of incorrect viscosity. | (a) Recommended 5W-20. |
| | (b) Valve Lash incorrect. | (b) Readjust. |
| | (c) Choke thermostat adjustment incorrect, rich. | (c) Adjust to correct setting. |
| **ENGINE RUNS LEAN, FIRST HALF MILE** | | |
| **CHOKE LEAN** | (a) Check items under (Poor Starting). | (a) See "Choke Valve Fails to Close." |
| | (b) Diaphragm adjustment lean. | (b) Readjust to specification. |
| **ENGINE RUNS LEAN AFTER HALF MILE** | | |
| **ENGINE HEAT INSUFFICIENT** | (a) Heat valve stuck open. | (a) Free with solvent. |
| | (b) Heat valve thermostat distorted. | (b) Replace thermostat. |
| | (c) Heat valve failed within exhaust. See engine section for proper diagnosis. | (c) Replace heat valve. |
| | (d) Water temperature sub-normal. | (d) Check thermostat. |

MyMopar.com

# HOLLEY MODEL NO. 1920 SERIES CARBURETOR INDEX


| | Page |
|---|---|
| Automatic Choke | 2 |
| Carburetor Adjustments | 9 |
| Cleaning Carburetor Parts | 1 |
| Closed Crankcase Vent System | 2 |
| Disassembling the Carburetor | 6 |
| General Information | 5 |
| Inspection and Reassembly | 7 |
| Specifications | 86 |


## GENERAL INFORMATION

The Standard Holley carburetor models R-3271A and R-3279A are used on the 225 cu. in. engine, when the vehicles are equipped with a manual transmission. R-3275A is used as above but with air conditioning.

The Holley carburetor models R-3272A and R-3280A are used on the 225 cu. in. engine, when the vehicles are equipped with an automatic transmission. R-3276A is used as above but with air conditioning (Fig. 1).

Special (CAP-Cleaner Air Package) Holley carburetor models R-3273A and R-3281A are used on the 225 cu. in. engine, when the vehicle is equipped with a manual transmission. R-3277A is used as above but with air conditioning. Models R-3274A and R-3282A are used on the 225 Cu. in. engines, when the vehicles are equipped with an automatic transmission. R-3277A is used as above but with air conditioning.

The dash pot (used only on manual transmission equipped vehicles) is mounted on the carburetor throttle body and retards the return of the throttle to idle position. **The proper adjustment of the dash pot is very important. (See Carburetor Adjustments.) (Fig. 2).**

These carburetors are equipped with a spring staged choke. The spring staged choke, shown in Figure 1 is a device incorporated in the choke mechanism which reduces the choke blade closing torque when cranking the engine at temperatures below zero. Thus the spring staging of the choke is a better match for the engine's starting mixture requirements at both the low and moderate temperatures.

Fuel from the bowl flows into the four basic fuel

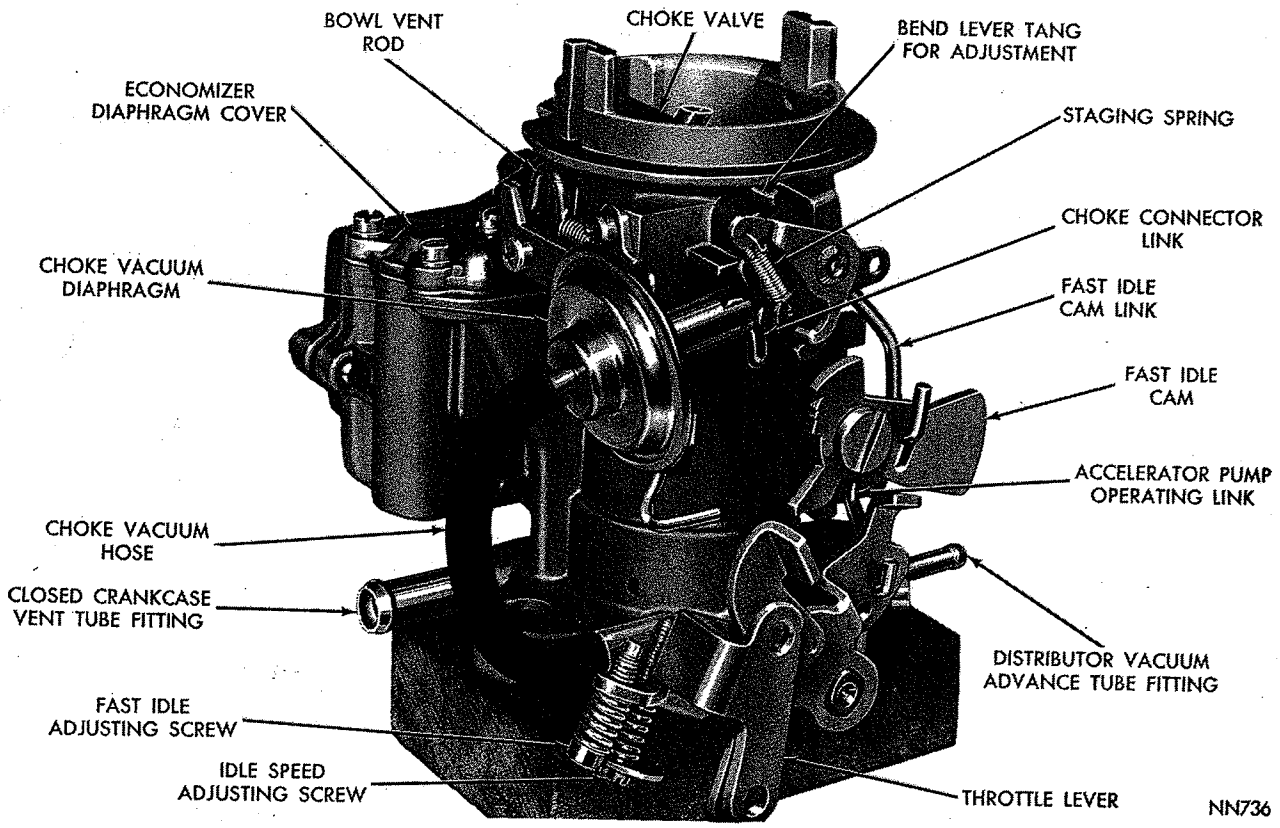


***Fig. 1—Carburetor Assembly (R-3271A, R-3275A, R-3272A, R-3276A, R-3279A and R-3280A)***

MyMopar.com

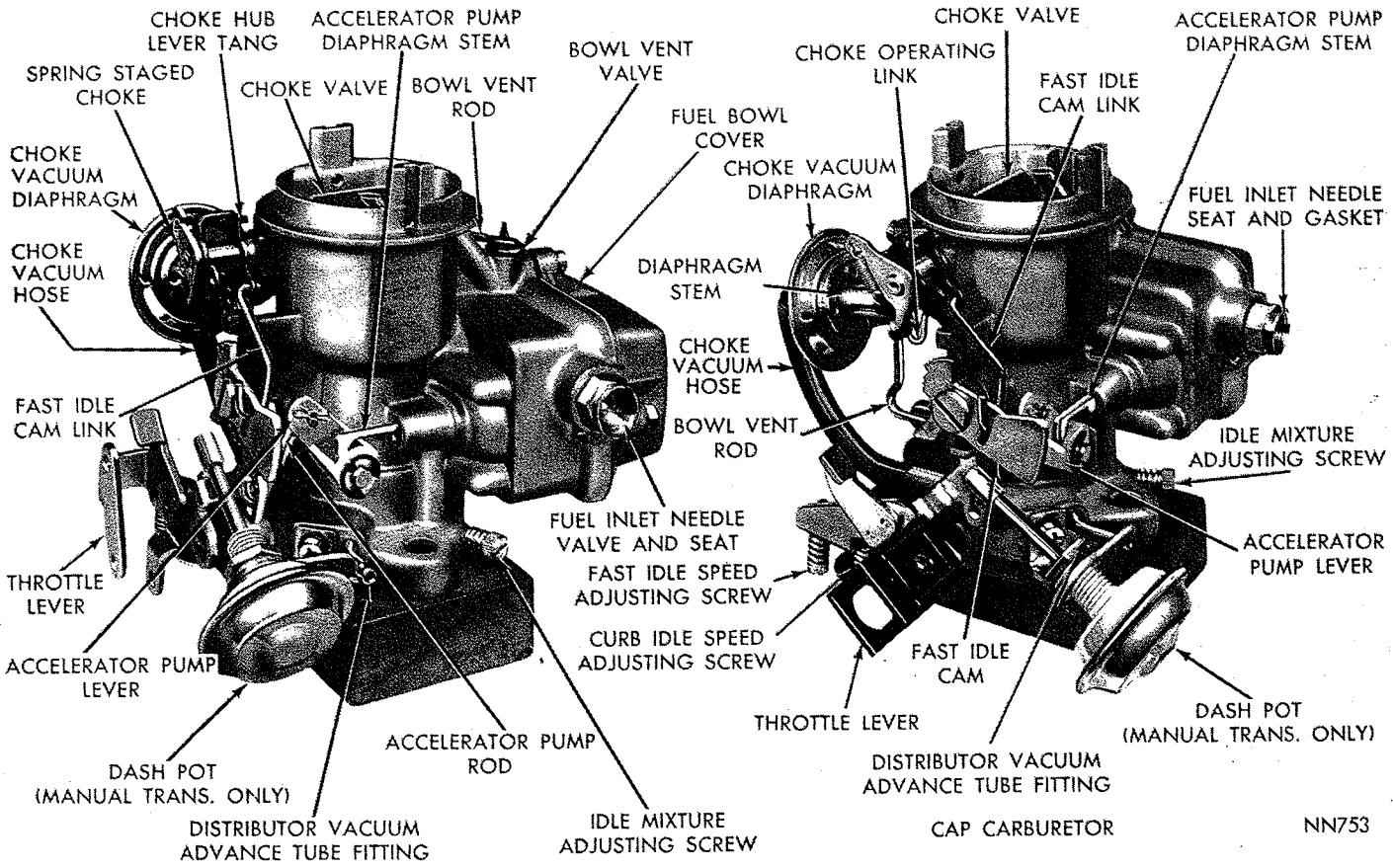


***Fig. 2—Carburetor Assembly (R-3273A, R-3277A, R-3274A, R-3278A, R-3281A and R-3282A)***

metering systems, which are: the idle system, the main metering system, the power enrichment system and the accelerating pump system.

The choke valve located in the bore of the carburetor is connected to a well-type automatic choke.

Additional fuel for acceleration is supplied by a diaphragm type, spring driven pump. The pump is operated by a lever connected by linkage to the throttle shaft.

A power valve mounted in the metering body, actuated by manifold vacuum, delivers the additional fuel necessary for full power and high speed operation.

Since the service procedures are identical on all Holley carburetors, the illustrations showing the various disassembly procedures will not always show any one specific carburetor.

## SERVICE PROCEDURES

### DISASSEMBLING THE CARBURETOR

To disassemble the carburetor for cleaning or overhauling, refer to (Figs. 1 and 2), then proceed as follows:

(1) Place carburetor assembly on repair stand, Tool C-3886, and remove dashpot (if so equipped).

(2) Remove vacuum hose between carburetor throttle body fitting and the vacuum diaphragm.

(3) Remove "E" clip from choke operating link and disengage the link from diaphragm plunger (stem) and choke lever. Refer to (Fig. 1 or 2).

(4) Remove choke vacuum diaphragm and bracket assembly and place to one side to be cleaned as a special item. **As the vacuum diaphragm bracket is being removed, the bowl vent valve rod and spring will fall out. Refer to (Fig. 3).**

(5) Using a 5/8" wrench, remove the fuel inlet needle valve and seat.

(6) Remove economizer retaining screws, then lift economizer cover, diaphragm and stem out of carburetor, as shown in (Fig. 4).

(7) Remove fuel bowl attaching screws, then remove fuel bowl, baffle and gasket, as shown in (Fig. 5). Slide baffle out of bowl. Discard gasket. Remove float bumper spring.

(8) Using a suitable tool, remove float retaining clip, then slide float off fulcrum pin.

(9) Remove screws that attach the economizer body and plugs, then remove economizer body (Fig. 6).

MyMopar.com

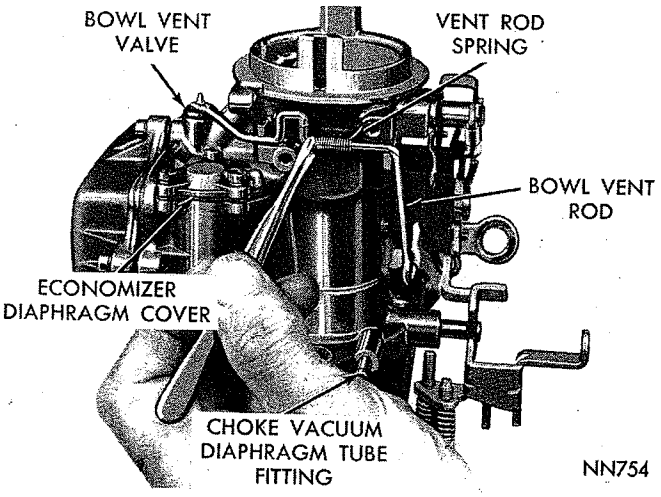


***Fig. 3—Removing or Installing Bowl Vent Rod***

(10) Tilt pump lever on its pivot until hook on the pump diaphragm stem can be released. Slide pump diaphragm and spring out of fuel bowl. Refer to (Fig. 7).

(11) Using Tool C-3748, remove main jet from economizer body. See (Fig. 8).

(12) Using a suitable tool, remove pump lever retaining clip. Slide lever off pivot and disengage link from throttle lever.

(13) Remove fast idle cam retaining screw, then remove cam, and at the same time, disengage fast idle cam rod.

(14) Remove idle air mixture adjusting screw and spring from the throttle flange.

(15) Remove fast idle and curb idle speed screws and springs from throttle lever.

(16) Remove screws that hold choke valve to the choke shaft.

(17) Lift out choke valve. Withdraw choke shaft and lever out of carburetor.

The carburetor assembly now has been disassembled as far as necessary for cleaning and inspection. It

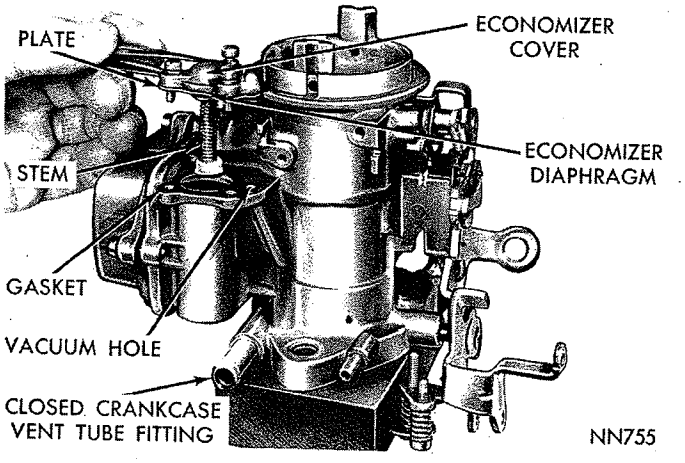


***Fig. 4—Removing or Installing the Economizer***

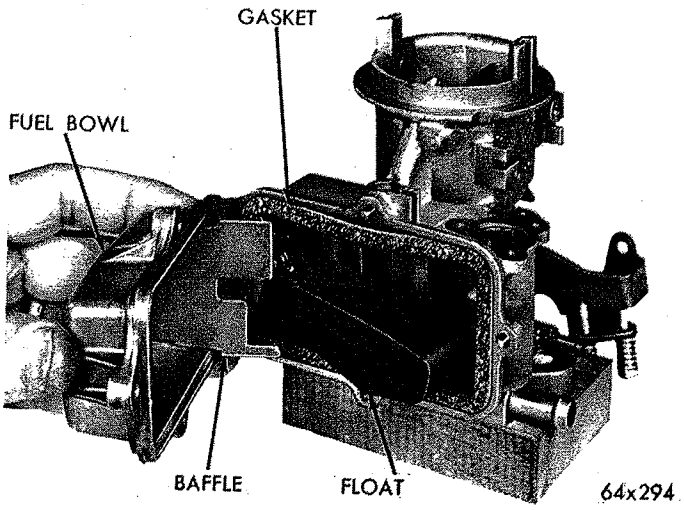


***Fig. 5—Removing or Installing Fuel Bowl***

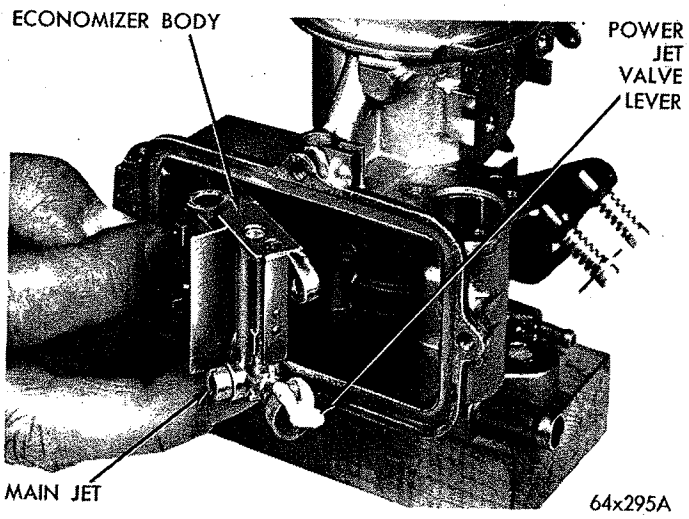


***Fig. 6—Removing or Installing Economizer Body***

is usually not advisable to remove the throttle shaft and valve from the throttle flange, unless wear or damage necessitates the installation of new parts.

## INSPECTION AND REASSEMBLY

### *Throttle Body*

(1) Check the throttle shaft for excessive wear in

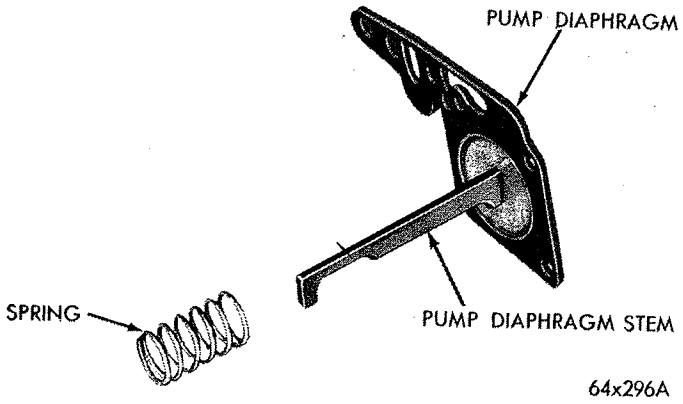


***Fig. 7—Pump Diaphragm and Spring***

MyMopar.com

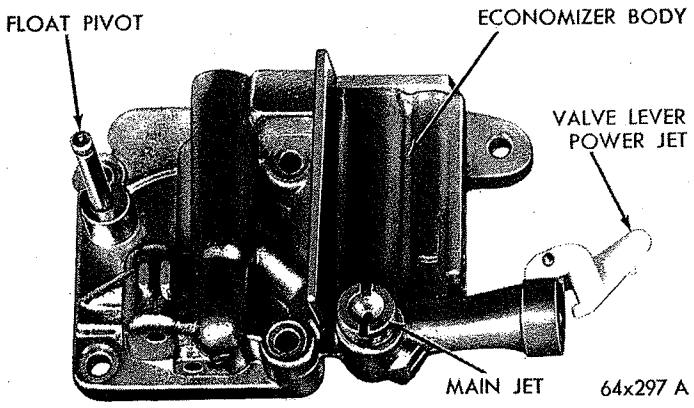


*Fig. 8—Economizer Body Assembly*

the throttle body. If wear is extreme, it is recommended that the carburetor assembly be replaced rather than installing a new shaft in old body.

During manufacture, the location of the idle transfer port and the spark advance control ports to the throttle valve is carefully established for one particular assembly.

If a new shaft should be installed in an old, worn throttle body, it would be very unlikely that the original relationship of the ports to the valve would be obtained. Changing the relationship of the valve to the ports would adversely affect normal car operation between the speeds of 15 and 30 miles per hour. However, if it has been determined that a new shaft or valve is to be installed, adhere to the following instructions:

(2) Mark position of throttle valve in the bore. (The CAP equipped valve has a small hole.)

(3) Remove screws that hold throttle valve to the shaft, then slide valve out of bore.

**CAUTION: These screws are staked on the opposite side and care should be used at removal so as not to break in the shaft.**

(4) Slide the throttle shaft out of the throttle body.

(5) Install new throttle shaft and lever (or new valve).

(6) Install NEW screws but do not tighten. Hold valve in place, with fingers pressing on the high side of valve. Tap valve lightly with a screwdriver to seat in the throttle bore. Now, tighten screws securely and stake by squeezing with pliers.

(7) Install idle mixture screw and spring in the throttle body. (The tapered portion must be straight and smooth. If tapered portion is grooved or ridged, a new idle mixture screw should be installed to insure having correct idle mixture control.) **Do not use a screwdriver.** Turn screw **lightly** against its seat with fingers. Back off 2 full turns for approximate adjustment.

### *Assembling the Carburetor*

(1) Slide hub lever of spring staged choke onto air horn boss. Insert choke shaft into air horn. Connect hub and shaft levers by installing spring see (Fig. 2). The shaft lever arm must be properly positioned between the stop surfaces and hub lever.

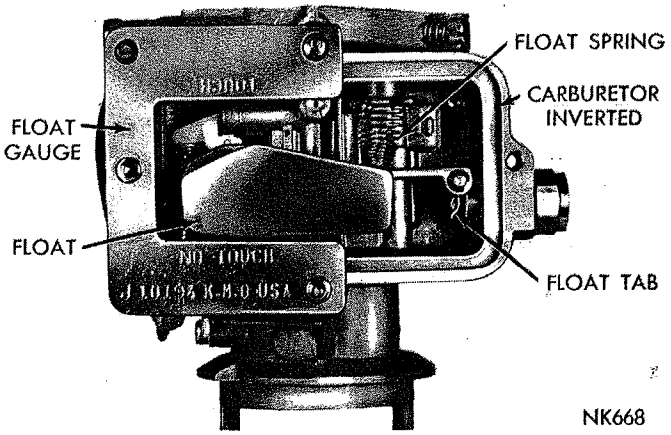


*Fig. 9—Checking the Float Setting*

(2) Install choke valve attaching screws but do not tighten. Hold valve closed, with fingers pressing on high side of the valve. Tap valve lightly with a screwdriver to seat in air horn. Tighten attaching screws securely and stake by squeezing with pliers.

(3) Test choke valve for binding by rotating lever through the extent of its full travel.

(4) Install fast idle and curb idle speed screws and springs in throttle lever.

(5) Engage pump cam link with lever and throttle lever, then install cam and secure with clip. When installing link, be sure link is in center hole of throttle lever.

(6) Refer to (Fig. 7), then slide pump spring over pump diaphragm stem. Install assembly in position in fuel bowl and at same time, engage hook on diaphragm stem with the recess in pump lever.

(7) Install main jet in economizer body, using Tool C-3748. Refer to (Fig. 8).

(8) Turn carburetor with bowl opening up then position the main well and economizer body in carburetor, as shown in (Fig. 6). Install screws and tighten securely.

(9) Engage choke link with choke lever and fast idle cam. Place cam in position, then install retaining screw. Tighten screw securely.

(10) Slide float into position over the fulcrum pin and secure with retainer clip.

(11) Install fuel inlet needle, seat and new gasket. Tighten seat securely. Install the float bumper spring. Check float setting as follows:

### *Checking Float Setting*

With the carburetor inverted, slide the float gauge C-3903 into position and check the setting on the

MyMopar.com

"touch" leg of the gauge, as shown in (Fig. 9). The float should just touch the gauge. Reverse the gauge and check the "No touch" leg. The float should just clear the gauge.

If an adjustment is necessary, bend the float tab (which touches the head of the fuel inlet needle) using needle nosed pliers. **Do not allow the float tab to contact the float needle head during this operation as the synthetic rubber tip of the needle can be compressed, giving a false setting. Do not touch contact area of float tab with pliers.**

Recheck float setting as described above after adjustment.

(1) Slide economizer diaphragm and stem assembly into position, making sure the vacuum holes are aligned and that stem is on power valve. Refer to (Fig. 4). Install cover and retaining screws. Tighten screws securely.

(2) Slide baffle into position in fuel bowl, now, place fuel bowl gasket on the cover. Place fuel bowl in position, install screws and washers and tighten alternately. (Be sure gasket is sealed in recess section of main body. Tighten the screws gently so as to compress only lock-washers. (Screws drawn down too tightly could distort the fuel bowl and cause a leak.)

### *Installing the Choke Vacuum Diaphragm*

Inspect the diaphragm vacuum fitting to insure that the passage is not plugged with foreign material. Leak check the diaphragm to determine if it has internal leaks. To do this, first depress the diaphragm stem. Then place a finger over the vacuum fitting to seal the opening. Release the diaphragm stem. If the stem moves more than 1/16 inch in 10 seconds, the leakage is excessive and the assembly must be replaced. Install the diaphragm as follows:

(1) Slide bowl vent valve rod assembly in position on air horn. Hold rod centered in its grooves, using a finger.

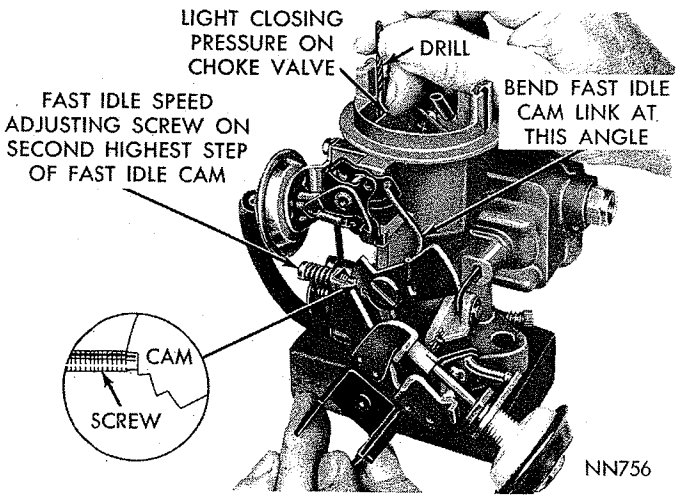


*Fig. 10—Fast Idle Cam Position Adjustment*

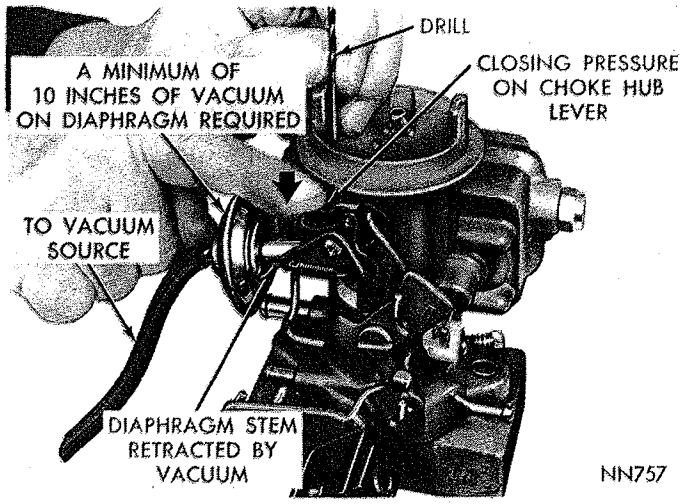


*Fig. 11—Checking the Choke Vacuum Kick Setting*

(2) Install vacuum diaphragm assembly on the air horn, being sure vent rod is in position. Install diaphragm attaching screws and tighten securely.

(3) Install choke operating link in position between diaphragm plunger (stem) and choke lever. Install the "E" clip to secure.

(4) Inspect vacuum diaphragm fitting and remove any dirt or foreign material which could plug vacuum passage. Inspect rubber hose for cracks, before placing it on the correct fitting. Refer to (Fig. 1). (Install dash pot if so equipped.)

Do not connect the vacuum hose to the diaphragm fitting until after the vacuum kick adjustment has been made. (See Carburetor Adjustments.)

## CARBURETOR ADJUSTMENTS

It is very important that the following adjustments be made on a reconditioned carburetor and in the sequence listed.

### *Fast Idle Speed and Cam Position Adjustment*

The fast idle engine speed adjustment should be made on the vehicle, as described in "Fast Idle Speed Adjustment" (On the Vehicle) Paragraph. However, the Fast Idle Cam Position Adjustment can be made on the bench. This adjustment is important to assure that the speeds of each cam step occur at the proper time during engine warm-up. Adjust as follows:

(1) With fast idle speed adjusting screw contacting step on the fast idle cam shown in (Fig. 10), move the choke valve toward closed position with light pressure. Insert a Number 52 drill between choke valve and the wall of air horn.

Standard carburetors (manual and automatic transmissions) and CAP carburetors (automatic transmissions). Use a Number 41 drill on CAP carburetors (manual transmissions).

(2) An adjustment will be necessary if a slight

MyMopar.com

drag is not obtained as drill or gauge is being removed.

(3) If an adjustment is necessary, bend fast idle link at lower angle, using Tool T109-213, until correct valve opening has been obtained. Refer to (Fig. 10).

**When the correct fast idle position cam adjustment has been made, the choke unloader (wide open kick) adjustment has also been obtained. No further adjustment is required.**

### *Vacuum Kick Adjustments—(This test can be made ON or OFF the vehicle)*

The choke diaphragm adjustment controls the fuel delivery while the engine is running. It positions the choke valve within the air horn by action of the linkage between the choke shaft and the diaphragm. The diaphragm must be energized to measure the vacuum kick adjustment. Use either a distributor test machine with a vacuum source or vacuum supplied by another vehicle. Adjust as follows:

(1) With engine **Not** running, open throttle valve far enough to allow choke valve to be moved to the closed position.

(2) Disconnect vacuum hose from the diaphragm and connect hose from vacuum supply, as shown in (Fig. 11). A minimum of 10 inches of mercury (HG) will be required.

(3) Insert a Number 38 drill, automatic transmissions (Standard and CAP carburetors.) Use a Number 30 drill, manual transmissions (Standard carburetors,) or a Number 28 drill, manual transmissions (CAP carburetors.)

Apply sufficient closing pressure on the choke shaft lever to provide the smallest choke valve opening possible without distortion of the diaphragm link. Note that the cylindrical stem of the diaphragm will extend as an internal spring is compressed. The spring must be fully compressed for proper measurement of the kick adjustment.

(4) An adjustment will be necessary, if a slight drag is not obtained as the drill or gauge is being removed.

The adjustment of this opening will require the removal of the choke operating link. **DAMAGE TO THE DIAPHRAGM AND THE CHOKE LEVER SLOT CAN RESULT IF THE LINK IS NOT REMOVED FOR THE BENDING OPERATION.**

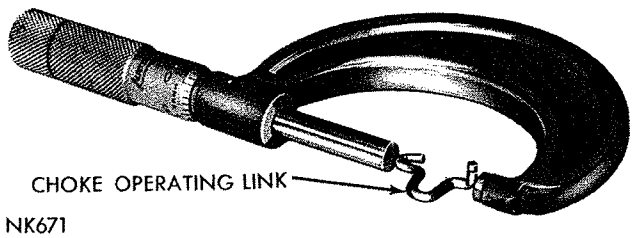


***Fig. 12—Choke Operating Link Measurements***

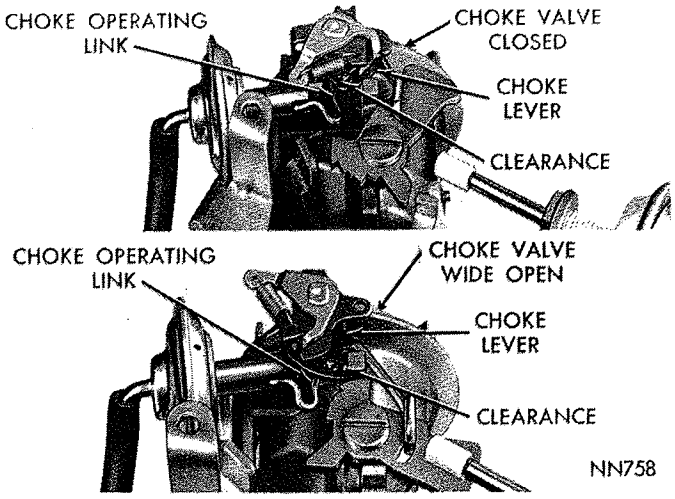


***Fig. 13—Choke Operating Link Clearances***

(5) Remove the "E" clip and disengage the choke operating link from diaphragm stem (plunger), then disengage the link from choke lever. (The best bending results will be obtained by using a vise and a pair of pliers.)

(6) Bend choke operating link at the angle to provide the correct choke valve opening. **CAUTION: A correction in the length of the link of .010 inch, will result in a change of .010 inch in the choke valve opening.**

As an example, if choke valve opening is .010 inch in error, the correction in the link length would be .010 inch.

A "1" inch micrometer will be helpful in establishing original length of the link, as shown in Figure 12, before completing the adjustment.

(7) Install choke operating link and recheck choke valve opening, using a gauge or drill. Refer to (Fig. 11).

Reinstall vacuum hose to diaphragm fitting and make the following check:

(8) With no vacuum applied to diaphragm, some clearance should exist between choke operating link and choke lever slot, in both the open and closed choke valve positions, as shown in (Fig. 13). **This clearance is necessary to allow the choke valve to close for starting as well as fully open, after the engine reaches the normal operating temperature.**

If a clearance does not exist in both of these positions, a recheck of the operating link adjustment should be made.

**Free movement of the choke valve between the closed and open positions is very necessary.**

This free movement should also exist between the kick and the open choke valve positions with the engine running. If binding does exist, the choke operating link has been improperly bent and should be corrected.

MyMopar.com

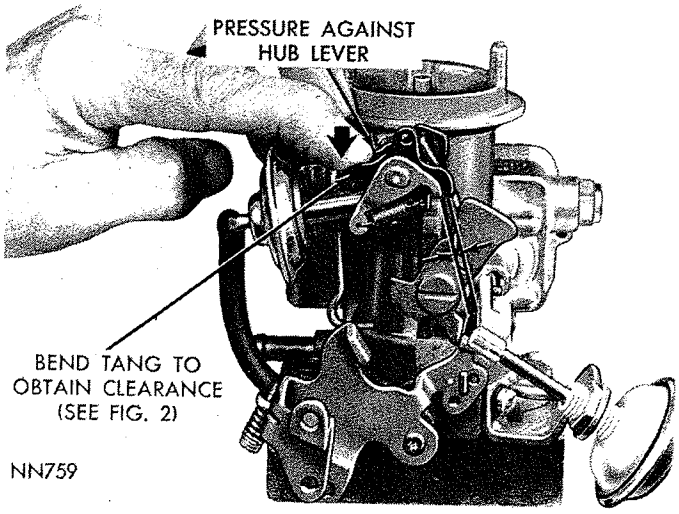


*Fig. 14—Spring Staged Choke Clearance*

### Spring Staged Choke Adjustment

To check the spring staged choke for correct operating clearance, refer to (Fig. 14), then proceed as follows:

The following steps are required to check this adjustment:

(1) With choke closed, press the hub lever firmly in closing direction.

(2) Check clearance between hub lever and the shaft lever, as shown in (Fig. 14).

(3) The clearance in this position, should be from .005 to .025 inches.

(4) If an adjustment is necessary, bend the lever tang slightly, until correct clearance has been obtained.

### Curb Idle Speed Adjustment (Standard Carburetors)

To make the idle speed adjustment, the engine must be thoroughly warmed up. A much more reliable idle adjustment can usually be obtained if the car has been driven a minimum of five miles. For the best results, it is recommended that tachometer be used in this adjustment. (Before making the idle speed adjustment, observe the following precautions.)

Because the alternator can charge at idle speeds and impose a load on the engine, the headlights should be turned on. This will assure setting the idle to compensate for the alternator load. On cars equipped with automatic transmission, unsnap the ball joint connection at the accelerator shaft bell crank. If this is not done, it is possible that the carburetor throttle will be held open against the stop in the transmission. The carburetor would therefore not respond to adjustment of the idle speed screw. After the proper idle speed has been obtained at the carburetor, screw the ball joint connector up or down until the ball on the bell crank will exactly mate with the socket. Snap into place.

To make the idle speed adjustment, place transmission in neutral position then proceed as follows:

(1) Turn idle speed screw **in** or **out** to obtain 550 r.p.m. (Be sure that choke valve is fully open and that fast idle adjusting screw is not contacting the cam.)

(2) Adjust idle mixture screw to obtain highest r.p.m. While making adjustment, carefully watch the tachometer and notice that speed can be decreased by turning the screw in either direction from setting that gave highest r.p.m. reading.

(3) From highest idle speed setting, turn the mixture screw clockwise (leaner) until the speed starts to drop. Turn the screw in the opposite direction (counterclockwise) just far enough to recover the speed that was lost.

This procedure will assure that the idle has been set to the leanest mixture possible for smooth idle. **This setting is very important.**

Since correct speed was originally set using speed screw, the speed obtained after finding the leanest smooth idle setting will probably be too fast.

(4) Readjust speed screw to obtain correct idle speed. Repeat steps 2 and 3 above.

### Fast Idle Speed Adjustment (On Vehicle)*

To set the fast idle speed on the car, connect a tachometer to vehicle, then set the curb idle speed and proceed as follows:

(1) With engine running and the transmission in

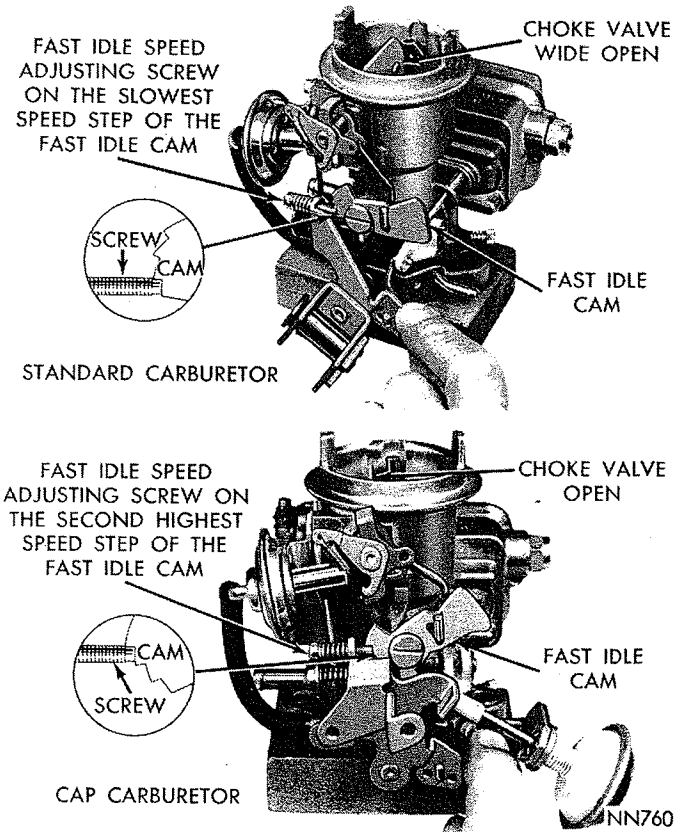


*Fig. 15—Fast Idle Speed Adjustment (on Vehicle)*

MyMopar.com

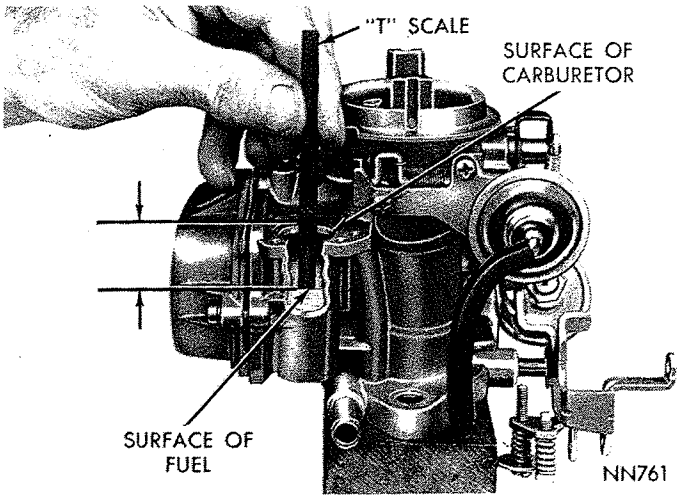


*Fig. 16—Measuring the Wet Fuel Level*

neutral position, open the throttle slightly.

(2) **On Standard Carubretors,** close the choke valve about 20 degrees then allow throttle to close. Return choke valve to the open position. The fast idle speed adjusting screw should contact the slowest speed step on fast idle cam (Fig. 15).

(3) **On CAP Carburetors,** open the throttle until the fast idle screw can be positioned on the second highest step of the cam (Fig. 15). **The air cleaner must be installed while measuring the engine speed.**
*After Approx. 500 Miles (if Necessary).

(4) With engine warmed-up to the normal operating temperature, turn fast idle speed adjusting screw **in** or **out** to secure 700 r.p.m. (Standard Carburetors) or 1550 rpm (CAP Carburetors).**

**Reposition the cam and throttle after every screw adjustment to apply normal throttle closing torque.**
****Special Note: CAP equipped Vehicles.** Before adjusting idle and/or fast idle speeds and mixtures, make sure that the basic timing and the distributor control valve are correctly adjusted as outlined under Idle Speed Adjustment (Curb Idle) CAP Carburetors.

### *Checking Wet Fuel Level*

With engine running and car on a level floor, the fuel level can be checked or measured through the economizer diaphragm opening. Using a 6″ scale with a depth gauge, measure the distance from the machined surface of the opening to the exact fuel surface, as shown in (Fig. 16). The measurement should be 27/32 inch.

### *Bowl Vent Adjustment*

With throttle valve at curb idle speed, it should be possible to insert a 3/32″ (.0937″) drill between the bowl vent and the seat, as shown in (Fig. 17). This measurement should never exceed .125 inch (⅛″ drill).

If an adjustment is necessary, bend vent rod at

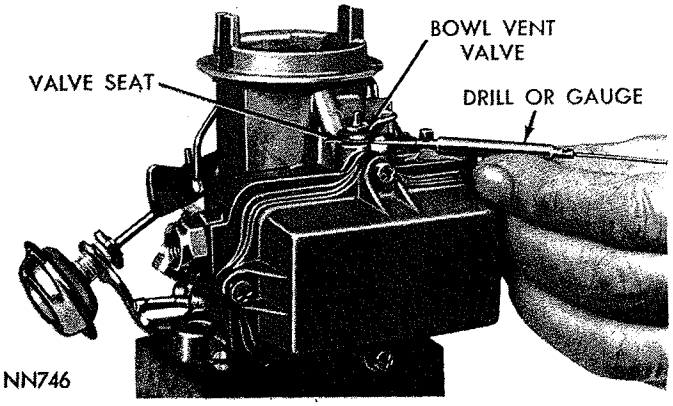


*Fig. 17—Checking Bowl Vent Opening*

horizontal portion until correct clearance has been obtained. Be sure vent rod does not bind in guide after adjusting.

## DASHPOT SETTING AND ADJUSTMENT—C.A.P. CARBURETORS

With the curb idle speed and mixture properly set and a tachometer installed, position the throttle lever so that the actuating tab on the lever is contacting the stem of the dashpot but not depressing it. The tachometer should read 2000 rpm if the setting is correct. To adjust the setting if necessary, screw the dashpot in or out as required. When the desired setting is obtained, tighten the lock nut on the dashpot against the bracket. (Fig. 18.)

### *Idle Speed Adjustment (Curb Idle) CAP Carburetors*

To make the idle speed adjustment on CAP carburetors, secure an accurate ignition tachometer and a Sun Electric Combustion-Vacuum Unit, Model 80, Exhaust Condenser, Model EC, and Hose 669-14 or equivalent. (The above analyzer is recommended; however, other reliable makes of analyzers in good

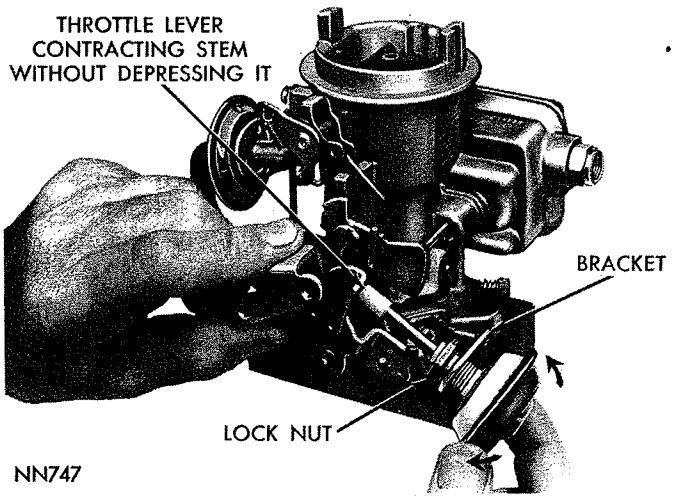


*Fig. 18—Adjusting the Dash Pot*

MyMopar.com

condition may be used.) Proceed as follows:

(1) Engine running at normal operating temperature, and timing checked and set at 5° at ATDC.

(2) Air Cleaner installed.

(3) Six cylinder engines only—turn headlights on high beam position.

(4) Automatic transmissions in neutral position (not in park position).

(5) On air conditioned vehicles, turn air conditioning **off.**

(6) Connect ignition tachometer.

(7) Insert probe of the exhaust gas analyzer in the tail pipe as far as possible (2 ft. minimum distance). On dual exhaust cars use the left side tail pipe (side opposite heat valve). It is very important that the probe and connecting tubing be free of leaks to prevent erroneous readings. If a garage exhaust system is used to conduct the exhaust gases away, a plenum chamber or other means must be used to reduce the vacuum of the exhaust system to ½ inch water or less.

(8) Connect the exhaust gas analyzer, warm up and calibrate according to manufacturer's instructions.

(9) Place clamp on hose between distributor vacuum control valve and intake manifold.

(10) Set the idle speed to the specified value for the specific engine-transmission combination.

**IMPORTANT: When adjusting mixture screws to obtain the air/fuel ratio specified for CAP, do not turn the mixture screw more than 1/16 turn at a time. The combustion analyzer is so sensitive that the ratio must be changed by very small increments if accurate readings are to be obtained. The meters read in air/fuel ratio so that a higher reading indicates a leaner mixture and vice versa.**

(a) Adjust each screw 1/16 turn richer (counterclockwise) and wait 10 seconds before reading the meter.

(b) If necessary, repeat step "a" until the meter indicates a definite increase in richness (lower reading). This step is very important since the meter reverses its readings and indicates a richer mixture as the carburetor is leaned out if the carburetor is set very lean.

(c) When it has been established that the meter is indicating a lower reading (richer mixture) when the idle mixture screws are turned in the richer direction, proceed to adjust the carburetor to give 14.2 air/fuel ratio, turning the screws counterclockwise (richer) to lower the meter reading and clockwise (leaner) to increase the meter reading.

(d) If the idle speed changes as the mixture screws are turned, adjust the speed to the specified value and readjust the mixture as required so that 14.2 air/fuel ratio is obtained at the specified idle speed.

(e) If the idle is rough the screws may be adjusted independently to achieve a smooth idle, provided the air/fuel ratio is held to the 14.2 value.

(11) Remove clamp from distributor vacuum valve hose. If idle speed changes materially check and set valve as described under "Distributor Vacuum Control Valve Adjustment."

# BBS SERIES CARBURETOR

## INDEX


| | Page |
|---|---|
| Automatic Choke | 2 |
| Carburetor Adjustments | 18 |
| Accelerator Pump | 18 |
| Fast Idle Speed (on the Car) | 21 |
| Choke Unloader (wide open kick) | 21 |
| Fast Idle Cam Index | 19 |
| Idle Speed Adjustment | 19 |
| Checking the Float Setting (on the vehicle) | 22 |
| Cleaning Carburetor Parts | 1 |
| Closed Crankcase Vent System | 2 |
| Disassembling the Carburetor | 14 |
| General Information | 13 |
| Inspection and Reassembly | 15 |
| Specifications | 87 |


## GENERAL INFORMATION

The Standard Ball and Ball single throat carburetor models BBS-4099S and BBS-4100S are used on the 170 cu. in. engine when the vehicles are equipped a manual or automatic transmission respectively. The BBS-4103S and BBS-4104S are used as above but with air conditioning. The BBS-4173S is used as above but with a Taxi application. (See Specifications) (Fig. 1).

The Special (CAP-Cleaner Air Package) Ball and Ball single throat carburetor models BBS-4101S and BBS-4102S are used on the 170 cu. in. engine when the vehicles are equipped a manual or automatic transmission respectively. The BBS-4105S and BBS-4106S are used as above but with air conditioning. (See Specifications) (Fig. 2).

The dash pot (used only on manual transmission equipped vehicles) is mounted on the carburetor air horn attaching screws and retards the return of the throttle to idle position. **The proper adjustment of the dash pot is very important!** (See Carburetor Adjustments.)

Since the service procedures are identical on all BBS carburetors, the illustrations showing the various disassembly procedures will not always show any one specific carburetor.

MyMopar.com

The spring staged choke, shown in (Fig. 1) is a device incorporated in the choke mechanism which limits the choke blade closing torque when cranking the engine at temperatures below zero. Thus the spring staging of the choke is a better match for the engine's starting mixture requirements at the low temperatures.

## SERVICE PROCEDURES

### DISASSEMBLING THE CARBURETOR

To disassemble the carburetor for cleaning or overhaul, refer to (Figs. 1 or 2), and proceed as follows:

(1) Place carburetor assembly on repair block, Tool C-3225.

(2) Remove hairpin clip and disengage accelerator pump operating rod.

(3) Remove vacuum hose between carburetor main body and vacuum diaphragm.

(4) Remove the clip from choke operating link and disengage link from diaphragm plunger (stem) and choke lever. Refer to (Fig. 1).

(5) Remove vacuum diaphragm and bracket assembly and place to one side to be cleaned as a special item. A liquid cleaner may damage diaphragm material.

(6) Remove air horn retaining screws. Remove dash pot (if so equipped).

(7) Tilt air horn toward throttle lever far enough to disengage fast idle cam link from the fast idle cam, as shown in (Fig. 3). Lift air horn up and away from main body. Discard gasket.

(8) Disengage accelerator pump plunger from rocker arm, by pushing up on bottom of plunger and sliding plunger shaft off hook. Slide plunger out of air horn and remove bowl vent valve, spring seat and spring. If old plunger can be used again, or if a new plunger is to be installed, place plunger in a jar of clean gasoline or kerosene to prevent the leather from drying out.

(9) Lift out float fulcrum pin retainer, then lift out the floats and fulcrum pin.

(10) Remove fuel inlet needle valve, seat and gasket from main body.

(11) Remove step-up piston retaining screw, and slide step-up piston and rod out of well, as shown in (Fig. 4). Now lift out the step-up piston spring. Remove step-up piston gasket from bottom of the well.

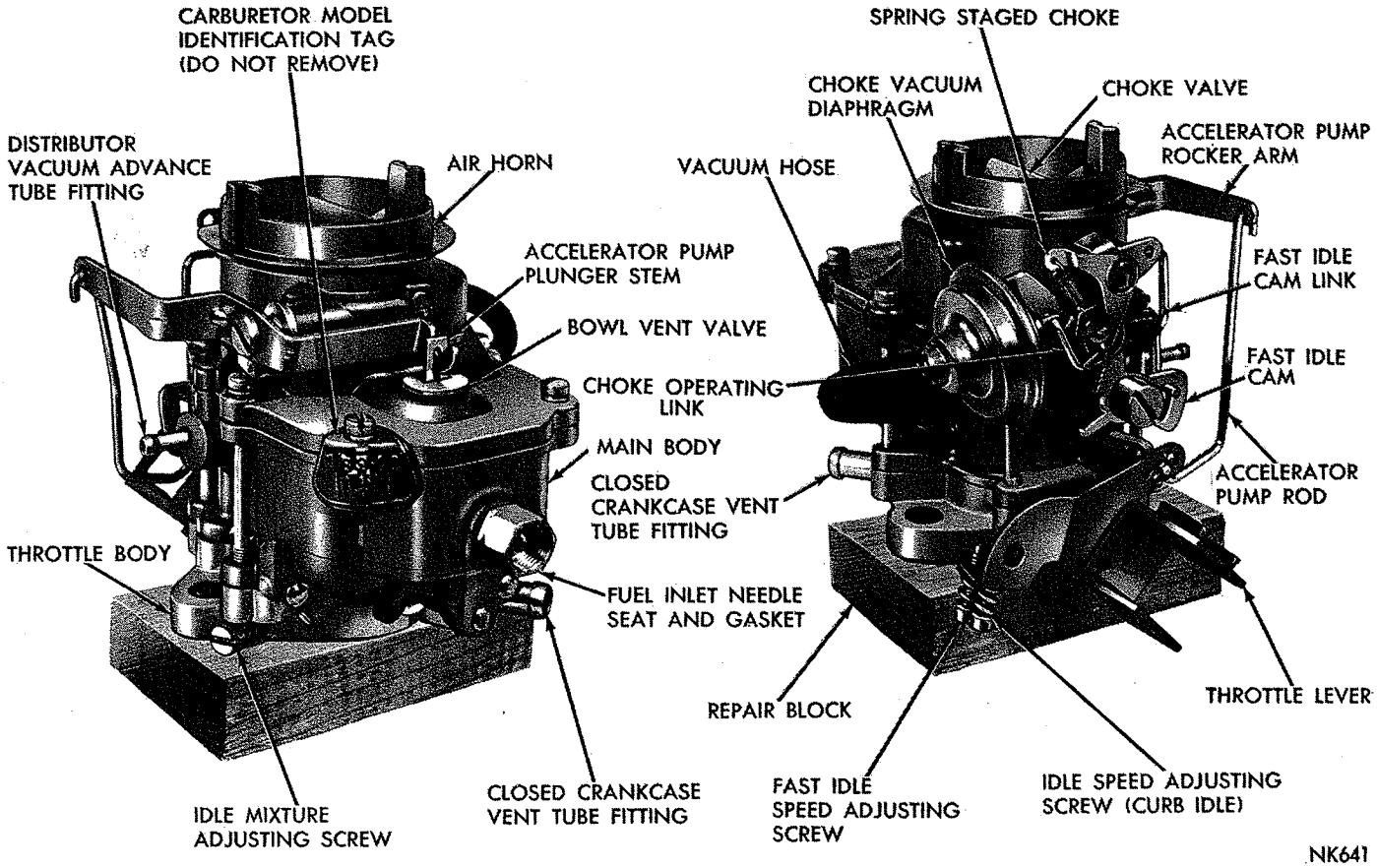


*Fig. 1—Carburetor Assembly (BBS-4099S, BBS-4100S, BBS-4103S, BBS-4104S and BBS-4173S)*

MyMopar.com

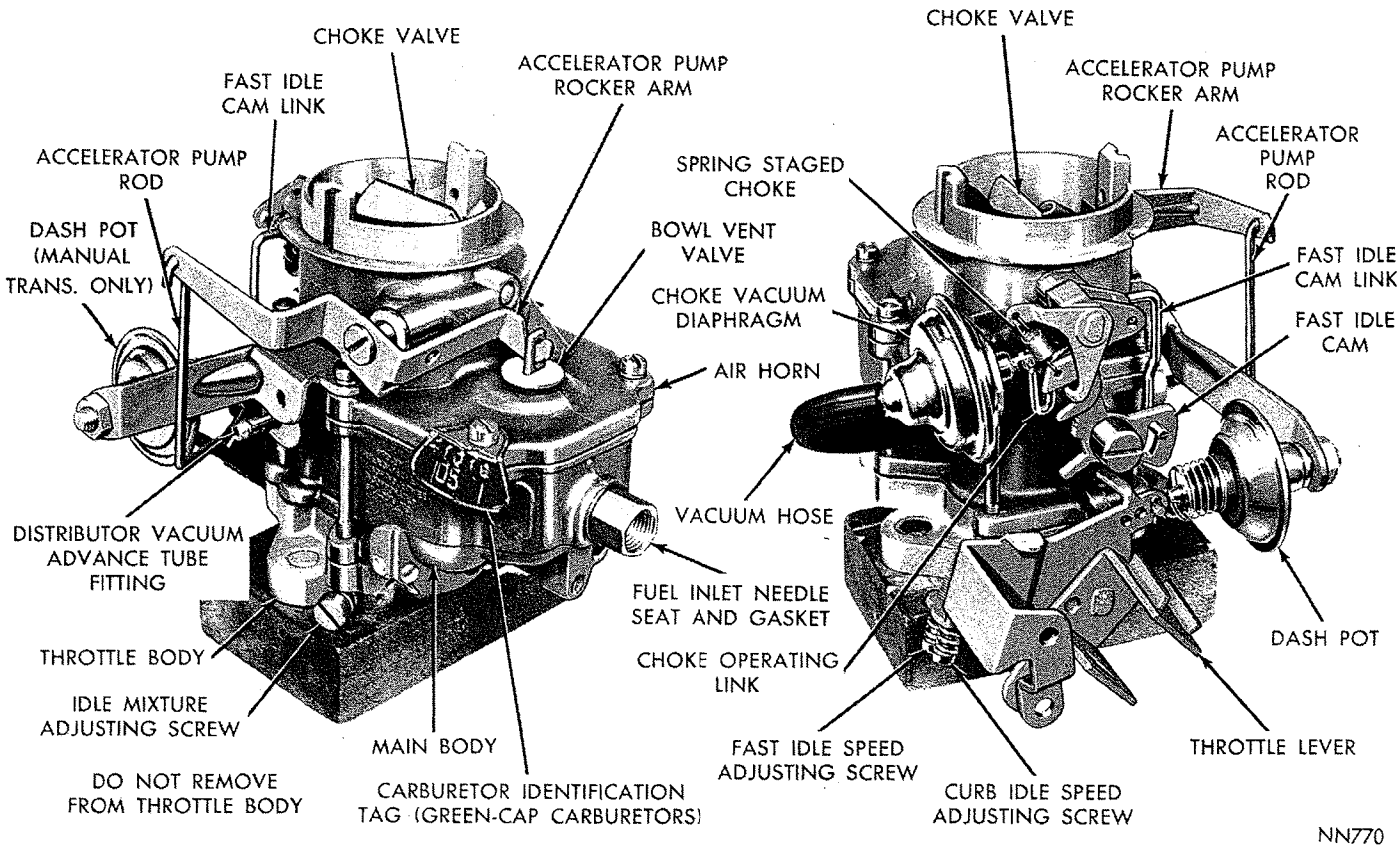


***Fig. 2—Carburetor Assembly (BBS-4101S, BBS-4102S, BBS-4105S and BBS-4106S)***

(12) Remove main metering jet and gasket (Fig. 5).

(13) Unscrew and remove idle orifice tube (Fig. 6).

(14) Invert carburetor and drop out the accelerator pump check balls from their respective seats.

(15) Using Tool T109-43 plug remover, remove accelerator pump jet plug. Using Tool T109-59T, remove accelerator pump jet, as shown in (Fig. 7).

(16) **Do not remove the idle mixture adjusting screw as this screw has limited travel and will be broken if removed.**

The carburetor now has been disassembled into three main units; air horn, main body and throttle body and the component parts of each disassembled as far as necessary for cleaning and inspection.

It is usually not advisable to remove the throttle shaft or valve from the throttle body, unless wear or damage necessitates the installation of new parts.

## INSPECTION AND REASSEMBLY

### *Throttle Body*

(1) Check the throttle shaft for excessive wear in

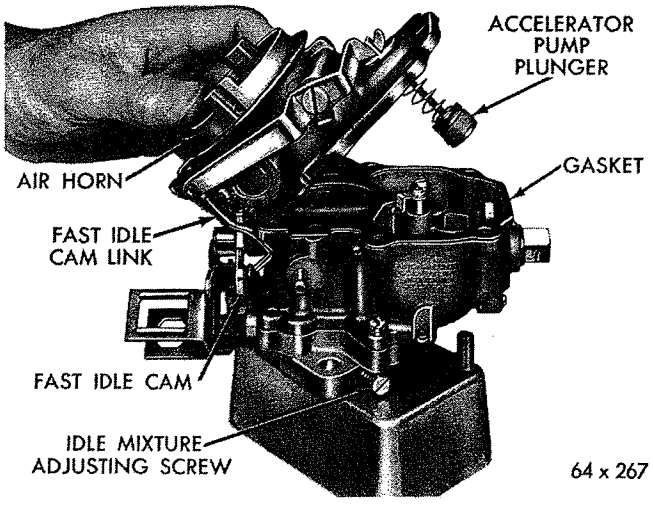


***Fig. 3—Removing or Installing Air Horn***

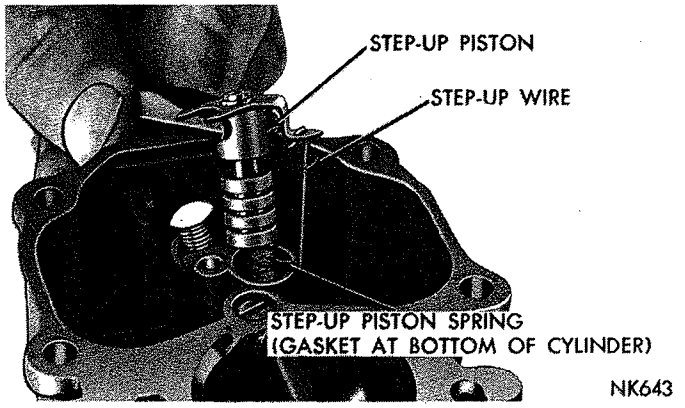


***Fig. 4—Removing or Installing Step-Up Piston***

MyMopar.com

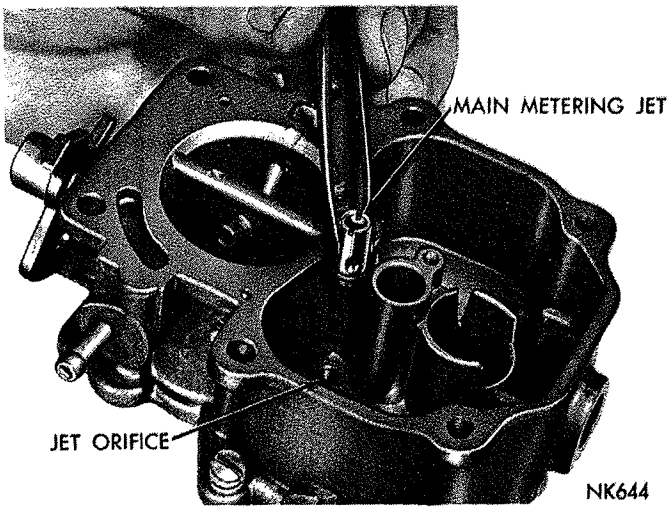


***Fig. 5—Removing or Installing Main Metering Jet***

the throttle body. If wear is extreme, it is recommended that the throttle body assembly be replaced rather than installing a new shaft in the old body.

During manufacture, the location of the idle transfer port and the spark advance control ports to the throttle valve is carefully established for one particular assembly. See (Fig. 8).

If a new shaft should be installed in an old, worn throttle body; it would be very unlikely that the original relationship of the ports to the valve would be obtained. Changing the relationship of the valve to the ports would adversely affect normal car operation between the speeds of 15 and 30 miles per hour. If a new shaft or valve is to be installed, adhere to the following instructions:

(2) Mark position of the throttle valve in the bore, so that it can be reinstalled in the same position.

(3) Remove screws that hold throttle valve to shaft, then slide the valve out of bore.

**CAUTION: These screws are staked on the opposite side and care should be used at removal so as not to break off in the shaft.**

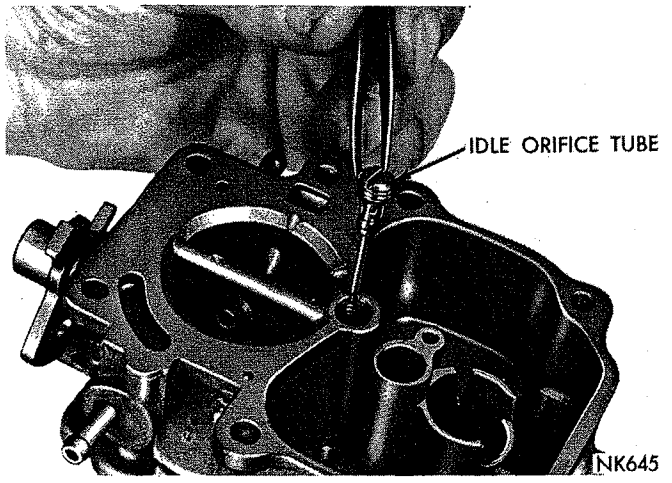


***Fig. 6—Removing or Installing Idle Orifice Tube***

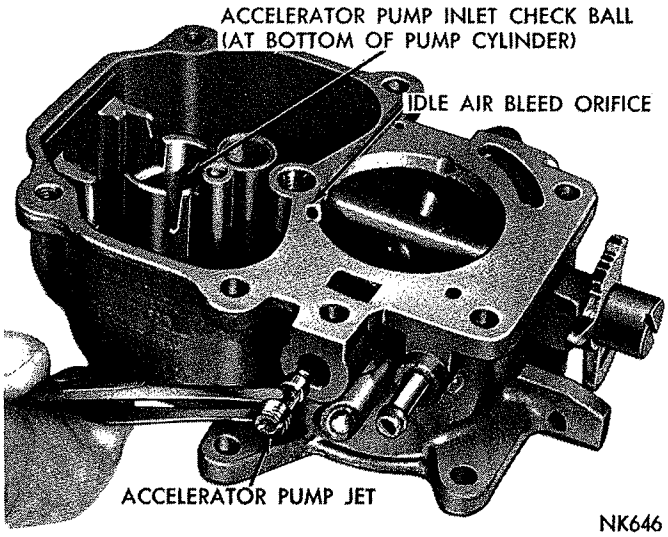


***Fig. 7—Removing or Installing Accelerator Pump Jet***

(4) Slide throttle shaft out of throttle body.

(5) Install new throttle shaft and lever (or new valve).

(6) Install NEW screws but do not tighten. Hold valve in place, with the fingers pressing on high side of valve. Tap valve lightly with a screwdriver to seat in throttle bore. Now tighten the screws securely and stake by squeezing with pliers.

(7) Turn the idle mixture screw lightly against its seat with the fingers. Back off 1 to 2 turns, for approximate adjustment. **Do Not Use a Screwdriver.**

### *Main Body*

(1) Install accelerator pump discharge and intake check balls in their respective passages, as shown in (Fig. 9).

To check accelerator pump system; fuel inlet and discharge check balls proceed as follows:

(2) Pour clean gasoline into carburetor bowl, approximately ½ inch deep. Remove pump plunger from jar of gasoline and slide down into pump cylinder. Raise plunger and press lightly on plunger shaft to expel air from the pump passage.

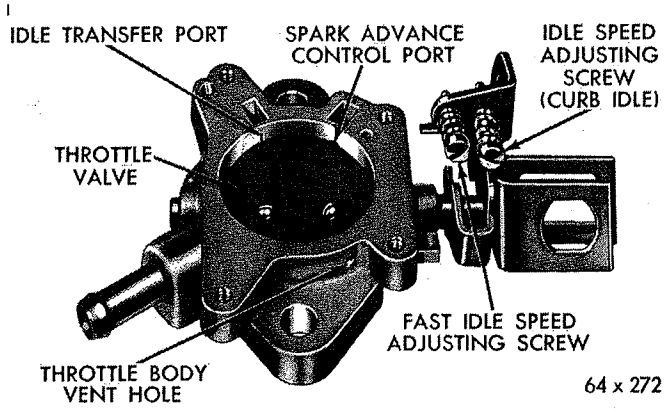


***Fig. 8—Ports in Relation to Throttle Valve***

MyMopar.com

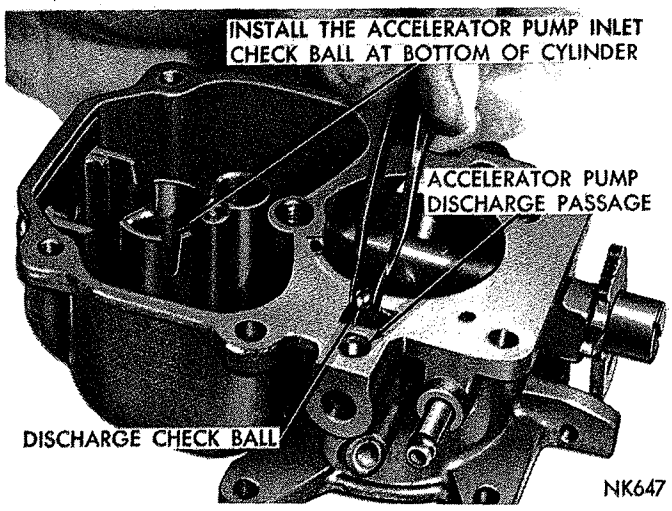


***Fig. 9—Installing Accelerator Pump Discharge and Intake Check Balls***

(3) Using a small clean brass rod, hold the discharge check ball down firmly on its seat. Again raise plunger and press downward. No fuel should be emitted from either the intake or discharge passage, as shown in (Fig. 10).

If any fuel does emit from either passage, it indicates the presence of dirt or a damaged check ball. Clean the passage again and repeat test. If leakage is still evident, install a NEW check ball. The fuel inlet check ball is located at the bottom of the plunger well.

(4) Install accelerator pump jet, as shown in (Fig. 7). Tighten securely, using Tool T109-59T. Install a new plug and drive tightly in place.

(5) Install idle orifice tube, refer to (Fig. 6). Tighten securely.

(6) Install the main metering jet and gasket, refer to (Fig. 5). Tighten securely.

(7) Before installing step-up piston, be sure step-up rod is able to move freely each side of the vertical

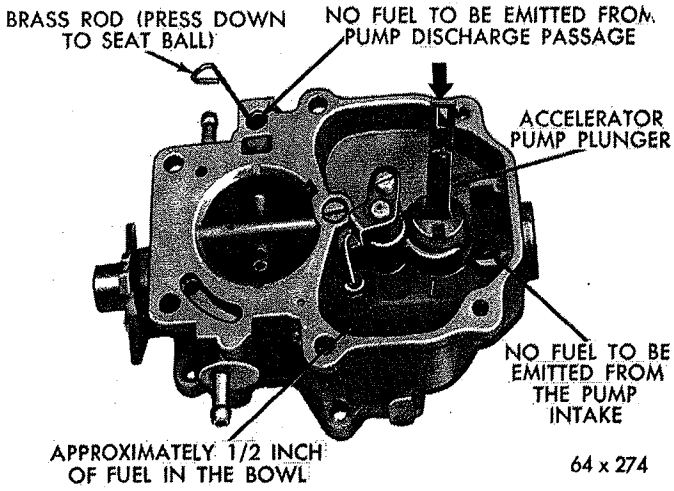


***Fig. 10—Testing Accelerator Pump Intake and Discharge Check Balls***

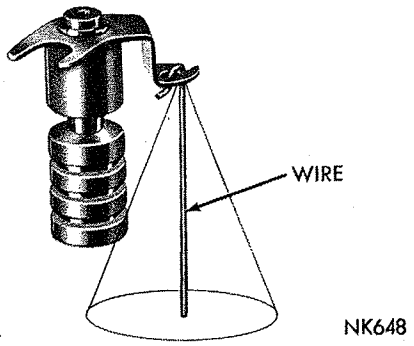


***Fig. 11—Step-Up Piston Wire Free Play***

position, as shown in (Fig. 11). The step-up rod must be straight and smooth.

(8) Slide step-up piston gasket down into position in piston well, then install step-up piston spring and step-up piston and rod (Refer to Fig. 4). Install retaining screw and tighten securely. Carefully guide the step-up rod into main metering jet. Be sure step-up piston slides freely in its cylinder. A step-up piston stuck in **UP** position will cause a rich mixture at part throttle, whereas a piston stuck in **DOWN** position will cause a lean mixture at wide open throttle and poor acceleration.

### *Checking Float Setting*

The carburetors are equipped with a synthetic rubber tipped fuel inlet needle. The needle tip is a rubber material which is not affected by gasoline and is stable over a wide range of temperatures. The tip is flexible enough to make a good seal on the needle seat.

The use of the new inlet needle requires a new procedure in adjusting the float setting. Care should be taken to perform this operation accurately in order to secure the best performance and fuel economy.

To correctly set the float height, when the carburetor is being overhauled, proceed as follows:

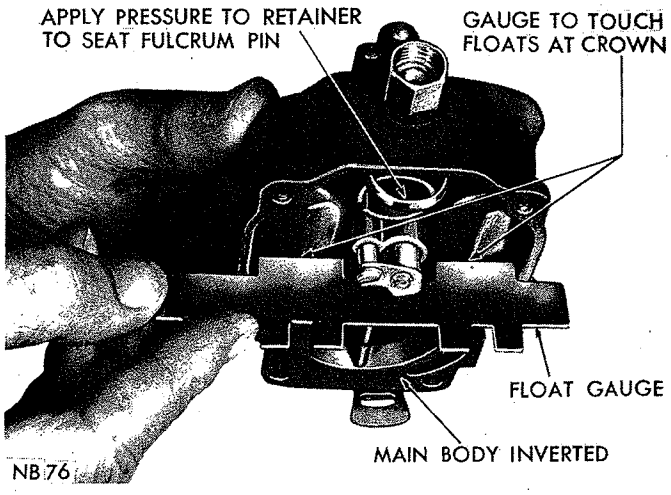


***Fig. 12—Checking the Float Setting***

MyMopar.com

(1) Install floats with fulcrum pin and pin retainer in main body.

(2) Install needle, seat and gasket in the body and tighten securely.

(3) Invert main body so that weight of the floats **only,** is forcing the needle against seat. Hold finger against retainer to fully seat the fulcrum pin.

(4) Using Tool T109-282 or T109-220; or a T scale, check the float, as shown in (Fig. 12). There should be ¼ or 9/32 inch (Taxi) (depending on carburetor, Refer to Specifications), from surface of fuel bowl to crown of each float at the center.

If an adjustment is necessary, bend the lip of float lever either in or out until correct setting has been obtained.

**CAUTION: Do not attempt to change the setting without removing the float, as the synthetic rubber tip can be compressed sufficiently to cause a false setting which will affect correct level of fuel in the bowl.** After being compressed, the tip is very slow to recover its original shape. Recheck as described in Step 4 above.

**It is very important that the float lip be perpendicular to the needle or slanted not more than 10 degrees away from the needle when the float is set correctly.**

(5) Place a new gasket on throttle body and position the main body making sure they are aligned.

### *Air Horn*

Check freedom of choke mechanism in the air horn. The shaft must float free to operate correctly.

(1) Assemble pump plunger, spring and spring seat and slide plunger shank through opening in air horn. Install bowl vent cap over plunger shank, then engage with pump rocker arm. (On the BBS-3841S carburetor, be sure hairpin clip is in upper position on plunger rod; all others in middle position.)

(2) Place a new gasket on the main body, then install air horn by tilting air horn, as shown in (Fig. 3), in order to engage fast idle link with fast idle cam. After engaging link, slowly lower air horn and at the same time guide accelerator plunger into its well.

(3) Install air horn attaching screws. Tighten securely.

(4) Install accelerator pump operating rod and secure with hairpin clip. Normal operation of the accelerator pump is obtained by installing pump rod in the center hole of throttle arm. (On the BBS-3841S carburetor, be sure pump rod is in the short stroke hole of throttle arm.)

### *Choke Vacuum Diaphragm*

Inspect the diaphragm vacuum fitting to insure that the passage is not plugged with foreign material. Leak test the diaphragm to determine if it has internal leaks. To do this, first depress the diaphragm stem. Then place a finger over the vacuum fitting to seal the opening. Release the diaphragm stem. If the stem moves more than 1/16 inch in ten seconds, the leakage is excessive and the assembly must be replaced.

Install the diaphragm assembly on the air horn as follows:

(1) Assemble to the air horn and tighten the attaching screws securely.

(2) Install choke operating link in position between the diaphragm plunger (stem) and choke lever. Install clip to secure.

(3) Inspect rubber hose for cracks before placing it on correct carburetor fitting. Refer to (Fig. 1). Do not connect the vacuum hose to diaphragm fitting until after vacuum kick adjustment has been made. (See Carburetor Adjustments.)

## CARBURETOR ADJUSTMENTS

It is very important that the following adjustments be made on a reconditioned carburetor, and in the sequence listed:

### *Accelerator Pump and Bowl Vent*

When assembling the accelerator pump to the air horn, note that the hairpin clip (which opens the bowl vent) can be placed in any one of three positioning notches. These notches correspond to the long, medium and short pump stroke holes in the throttle lever. Normally, the bowl vent clip on the pump stem will be at the middle notch and the pump operating rod in the medium stroke hole.

The proper procedure is to adjust the amount of bowl vent opening instead of measuring and setting the height of the pump plunger.

To check or set the adjustment, proceed as follows:

(1) Back off idle speed adjusting screw. Open the choke valve, so that when throttle valves are closed, the fast idle adjusting screw will not contact fast idle cam.

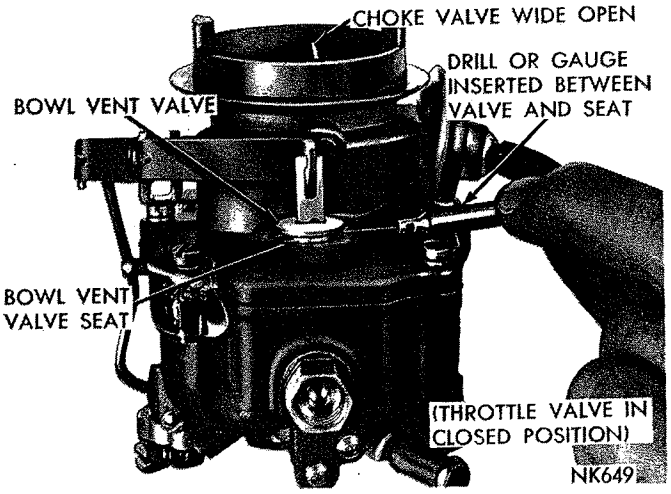


***Fig. 13—Checking Bowl Vent Opening***

MyMopar.com

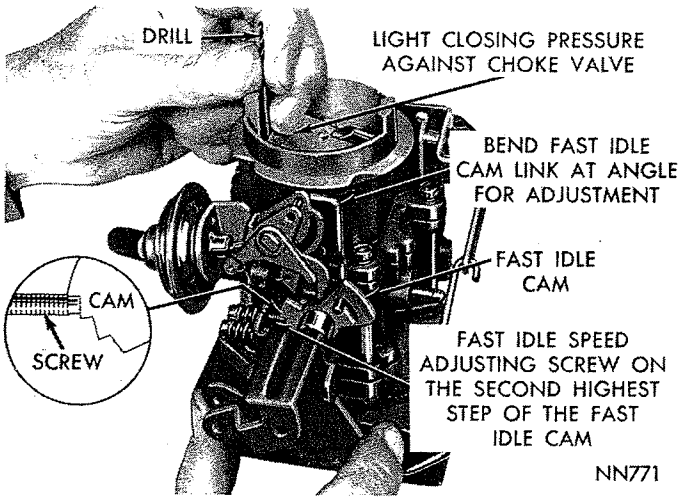


***Fig. 14—Fast Idle Cam Position Adjustment***

(2) Be sure pump operating rod is in medium stroke hole in the throttle lever, and that bowl vent clip on the pump stem is in the center notch.

(3) Close throttle valves tightly. It should be just possible to insert a 1/16 inch drill (.060) between the bowl vent and air horn, as shown in (Fig. 13).

If an adjustment is necessary, bend the pump operating rod, using Tool T109-213, at the lower angle, until correct bowl vent opening has been obtained.

This is an important adjustment, since too much lift at the bowl vent will result in considerable loss in low speed fuel economy.

Remember that if the pump operating rod is moved to either the short or long stroke position, a corresponding change must be made in the location of the bowl vent clip, and the amount of lift of the bowl vent rechecked and adjusted.

**The accelerator pump travel is automatically taken care of when the bowl vent is properly adjusted.**

### *Fast Idle Speed and Cam Position Adjustment*

The fast idle engine speed adjustment should be made on the vehicle, as described in the Fast Idle Speed Adjustment (On the Vehicle) Paragraph. However, the fast idle cam position adjustment can be made on the bench. This adjustment is important to assure that the speeds of each cam step occur at the proper time during engine warm-up. Adjust as follows:

(1) With fast idle speed adjusting screw contacting the step on fast idle cam shown in (Fig. 14), move choke valve toward closed position with light pressure. Insert a #48 drill between the choke valve and wall of the air horn.

(2) An adjustment will be necessary if a slight drag is not obtained as the drill is being removed.

(3) If an adjustment is necessary, bend fast idle rod at upper angle, using Tool T109-213, until correct valve opening has been obtained. Refer to (Fig. 14).

### *Vacuum Kick Adjustment—(This test can be made ON or OFF the vehicle.)*

The choke diaphragm adjustment controls the fuel delivery while the engine is running. It positions the choke valve within the air horn by action of the linkage between the choke shaft and the diaphragm. The diaphragm must be energized to measure the vacuum kick adjustment. Use either a distributor test machine with a vacuum source, or vacuum supplied by another vehicle.

(1) With engine **Not** running, open the throttle valves far enough to allow choke valve to be moved to closed position.

(2) Disconnect vacuum hose from diaphragm and connect hose from the vacuum supply, as shown in (Fig. 15). A minimum of 10 inches of mercury (HG) will be required.

(3) Insert specified drill between the choke valve and wall of the air horn. (Refer to Specifications.) Apply sufficient closing pressure on choke shaft lever to provide the smallest choke valve opening possible without distortion of the diaphragm link. Note that cylindrical stem of diaphragm will extend, as an internal spring is compressed. The spring must be fully compressed for proper measurement of the kick adjustment.

(4) An adjustment will be necessary if a slight drag is not obtained as drill or gauge is being removed.

The adjustment of this opening will require the removal of the choke operating link. **DAMAGE TO THE DIAPHRAGM AND THE CHOKE LEVER SLOT CAN RESULT, IF THE LINK IS NOT REMOVED FOR THE BENDING OPERATION.**

(5) Remove clip and disengage choke operating link from the diaphragm stem, then disengage link from choke lever. (The best bending results will be obtained by using a vise and a pair of pliers.)

(6) Bend choke operating link at angle to provide correct choke valve opening. **CAUTION: A correction**

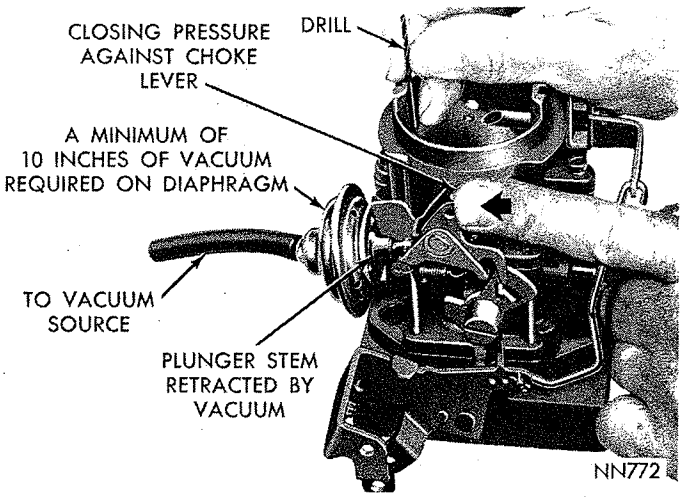


***Fig. 15—Vacuum Kick Adjustment***

MyMopar.com

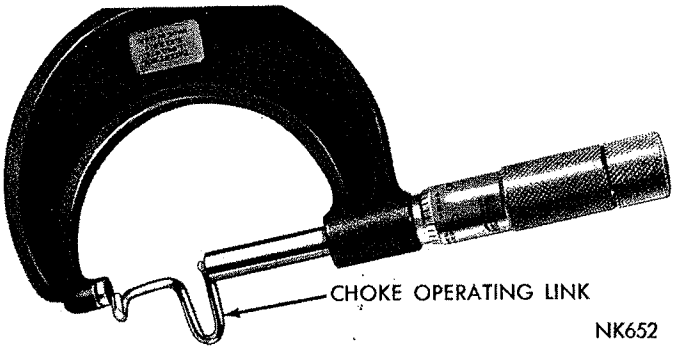


*Fig. 16—Choke Operating Link Measurements*

**in the length of the link of .010 inch, will result in a change of .015 inch in the choke valve opening.**

As an example, if the choke valve opening is 0.015 inch in error, correction in link length would be .010 inch.

A 2 inch micrometer will be helpful in establishing original length of the link, as shown in (Fig. 16), before completing adjustment.

(7) Install choke operating link and recheck choke valve opening, using a drill (Fig. 15).

Reinstall vacuum hose to diaphragm and make the following check:

(8) With no vacuum applied to the diaphragm, some clearance should exist between the choke operating link and choke lever slot, in both the open and closed choke valve positions, as shown in (Fig. 17). **This clearance is necessary to allow choke valve to close for starting as well as fully open after the engine reaches normal operating temperature.**

If a clearance does not exist in both of these positions, a recheck of the operating link adjustment should be made.

**Free movement of the choke valve between the closed and open positions is very necessary.**

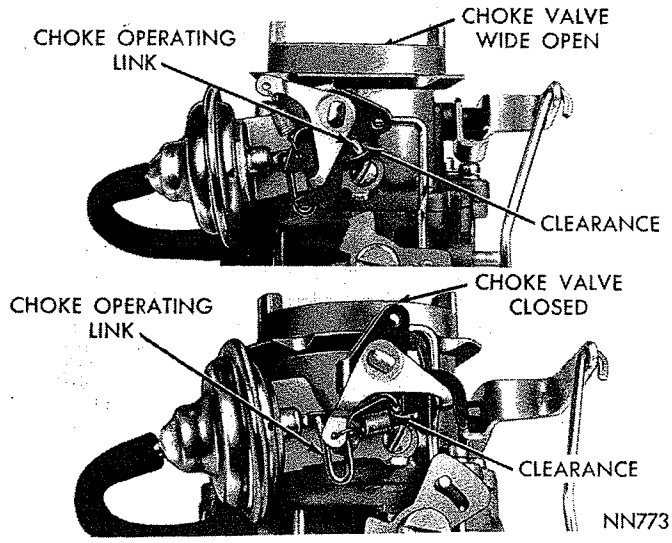


*Fig. 17—Choke Operating Link Clearances*

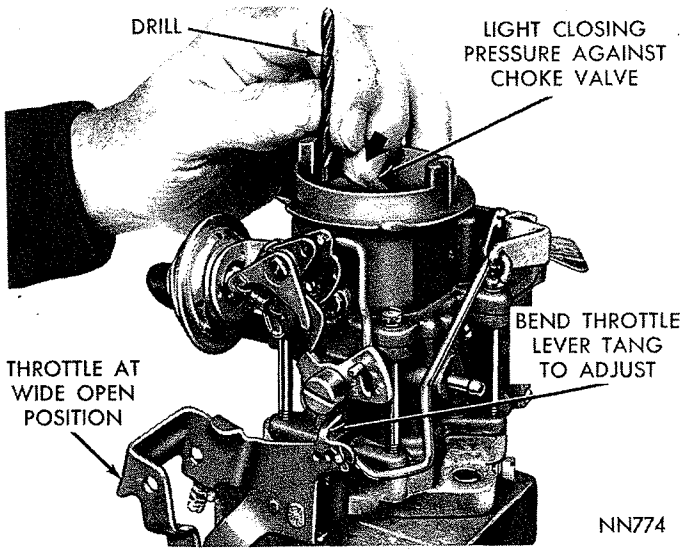


*Fig. 18—Checking the Choke Unloader Setting (Wide Open Kick)*

This free movement should also exist between the kick and the open choke valve positions with the engine running. If binding does exist, the choke operating link has been improperly bent and should be corrected.

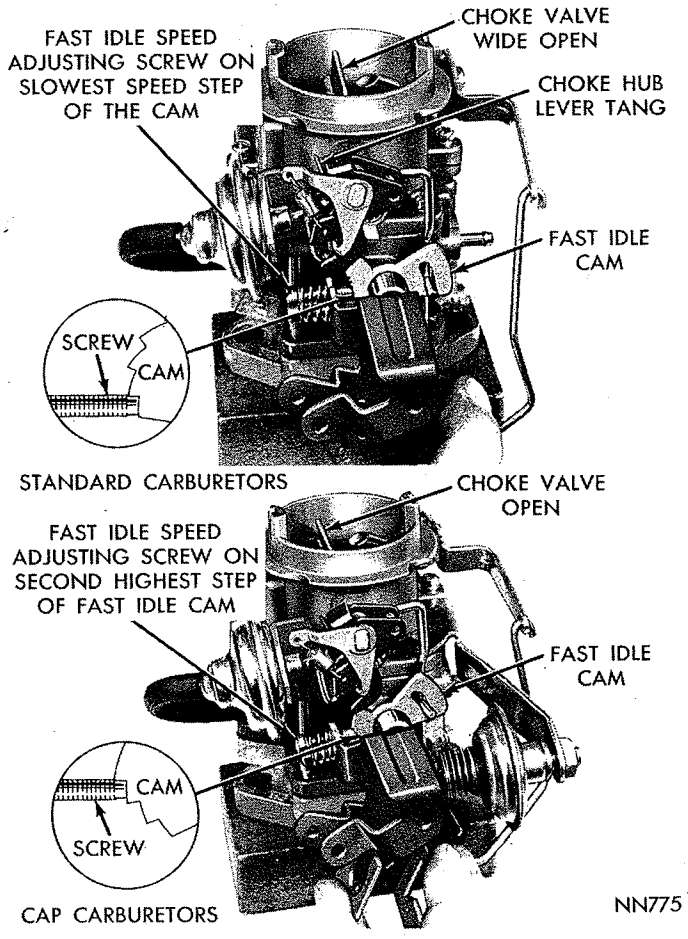


*Fig. 19—Fast Idle Speed Adjustment (on the Vehicle)*

MyMopar.com

### Choke Unloader (Wide Open Kick)

(1) Hold throttle valve in wide open position, insert Tool T109-28 or 3/16″ drill between the upper edge of choke valve and the inner wall of air horn, as shown in (Fig. 18).

(2) If no drag is felt, or if too much drag is apparent, bend unloader tang on the throttle lever, until correct clearance has been obtained.

### Fast Idle Speed Adjustment (On the Car)*

To set the fast idle speed on the car, connect a tachometer to the vehicle, then set the curb idle and proceed as follows:

(1) With engine running, and transmission in neutral position, open the throttle slightly.

(2) **On Standard carburetors,** close the choke valve about 20 degrees, then allow throttle to close. Return choke valve to the open position. The fast idle speed adjusting screw should contact the slowest speed step on fast idle cam (Fig. 19).

(3) **On CAP Carburetors,** open the throttle until the fast idle screw can be positioned on the second highest step of the cam (Fig. 19). **The air cleaner must be installed while measuring the engine speed.**

(4) With the engine warmed up to normal operating temperature, turn fast idle speed adjusting screw **in** or **out** to secure 700 rpm (Standard Carburetors) or 1550 rpm (CAP Carburetors).**

### Spring Staged Choke Adjustment

To check the spring staged choke for correct operating clearance, refer to (Fig. 20), then proceed as follows:

(1) Push on hub lever with finger, at the closed choke position. A small opening should exist between the shaft and hub levers, as shown in (Fig. 20).

(2) Using a drill or gauge, measure the opening. The opening should be from .010 to .040 inches.

(3) If an adjustment is necessary, bend hub lever tang until correct opening has been obtained.

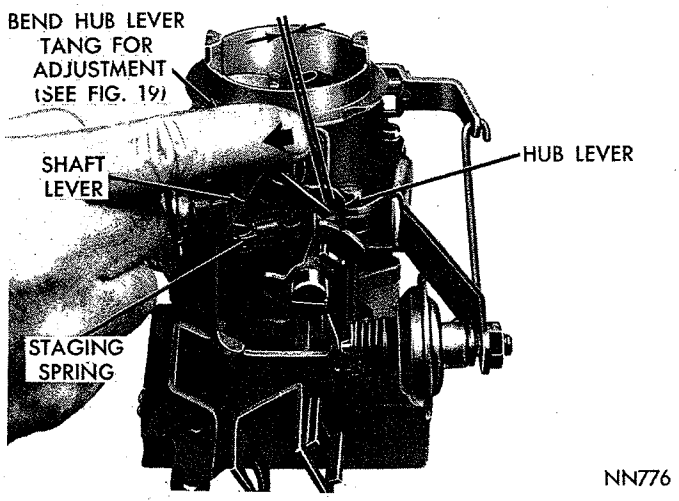


*Fig. 20—Spring Staged Choke Adjustment*

### Idle Speed Adjustment (Curb Idle) (Standard Carburetors)

To make the idle speed adjustment, the engine must be thoroughly warmed up. A much more reliable idle adjustment can usually be obtained if the car has been driven a minimum of five miles. For the best results, it is recommended that a tachometer be used in this adjustment. (Before making the idle speed adjustment, observe the following precautions:)

Because the alternator can charge at idle speeds and impose a load on the engine, the headlights should be turned on. This will assure setting the idle to compensate for the alternator load. On cars equipped with automatic transmissions, unsnap the ball joint connection at the accelerator shaft bell crank. If this is not done, it is possible that the carburetor throttle will be held open against the stop in the transmission. The carburetor would therefore not respond to adjustment of the idle speed screw. After the proper idle speed has been obtained at the carburetor, screw the ball joint connector up or down until the ball on the bell crank will exactly mate with the socket. Snap into place.

To make the idle speed adjustment, proceed as follows:

(1) Turn idle speed screw **in** or **out** to obtain 550 r.p.m. (Be sure that choke valve is fully open and that fast idle adjusting screw is not contacting the cam.)

(2) Adjust idle mixture screw to obtain the highest r.p.m. While making adjustment, carefully watch the tachometer and notice that speed can be decreased by turning screw in either direction from setting that gave the highest r.p.m. reading.

(3) From highest idle speed setting, turn mixture screw clockwise (leaner) until speed starts to drop. Turn screw in opposite direction (counter-clockwise) just far enough to recover speed that was lost.

This procedure will assure that the idle has been set the leanest mixture possible for smooth idle. **This setting is very important.**

Since the correct speed was originally set using the speed screw, the speed obtained after finding the leanest smooth idle setting will probably be too fast.

(4) Readjust speed screw to obtain correct idle speed. Repeat steps 2 and 3 above.

*After Approx. 500 (If Necessary).

**Special Note: CAP Equipped Vehicles**

Before adjusting idle and/or fast idle speeds and mixtures, make sure that the basic timing and the distributor control valve are correctly adjusted, as outlined under Idle Speed Adjustment (Curb Idle) CAP Carburetors.

MyMopar.com

## DASHPOT SETTING AND ADJUSTMENT—C.A.P. CARBURETOR

### *(Manual Transmission Only)*

With the curb idle speed and mixture properly set and a tachometer installed, position the throttle lever so that the actuating tab on the lever is contacting the stem of the dashpot but not depressing it. The tachometer should read 2000 rpm if the setting is correct. To adjust the setting if necessary, screw the dashpot in or out as required. When the desired setting is obtained, tighten the lock nut on the dashpot against the bracket.

## CHECKING THE FLOAT SETTING—(on the Vehicle)

To check the float setting with the carburetor mounted on the vehicle, proceed as follows:

(1) Remove accelerator pump operating rod.

(2) Remove two of the long air horn attaching screws and two short screws, then install the two short screws in place of the two long screws removed. This will hold the main body to throttle body. Tighten screws securely.

(3) Remove remaining air horn screws, then tilt air horn far enough to disengage fast idle cam link from fast idle cam. Remove air horn and gasket.

Check float setting as follows:

(4) Seat float fulcrum pin by pressing on the fulcrum pin retainer.

There should be enough fuel in the bowl to raise float so that lip bears firmly against needle. Additional fuel may be admitted by slightly depressing float. If the fuel pressure in line is insufficient to force additional fuel into the bowl, add the necessary fuel from a clean container.

**CAUTION: Since the manifolds may be hot, it is dangerous to spill fuel on these surfaces. Therefore, take the necessary precautions to avoid spillage.**

(5) With only the pressure of the buoyant float holding float lip against inlet needle, check float setting, using Tool T109-239 or a "T" scale. There should be ¼ inch from the surface of the bowl (gasket removed) to the crown of floats at center. (9/32" on certain Carburetors.)

If an adjustment is necessary, hold the float on the bottom of the bowl, then bend the float lip toward or away from the needle. Recheck the ¼ inch setting again, then repeat the lip bending operation as required.

**CAUTION: When bending the float lip, do not allow the lip to push against the needle as the tip can be compressed sufficiently to cause a false setting which will affect correct level of the fuel in the bowl.**

After being compressed, the tip is very slow to recover its original shape.

It is very important that the float lip be perpendicular to the needle or slanted not more than 10 degrees away from the needle when the float is correctly set.

(6) Reassemble air horn as described previously.

### *Idle Speed Adjustment (Curb Idle) CAP Carburetors*

To make the idle speed adjustment on CAP carburetors, secure an accurate ignition tachometer and a Sun Electric Combustion-Vacuum Unit, Model 80, Exhaust Condenser, Model EC, and Hose 669-14 or equivalent. (The above analyzer is recommended; however, other reliable makes of analyzers in good condition may be used.) Proceed as follows:

(1) Engine running at normal operating temperature, and timing checked and set at 5° ATDC.

(2) Air Cleaner installed.

(3) Six cylinder engines only—turn headlights on high beam position.

(4) Automatic transmissions in neutral position (not in park position).

(5) On air conditioned vehicles, turn air conditioning **off.**

(6) Connect ignition tachometer.

(7) Insert probe of the exhaust gas analyzer in the tail pipe as far as possible (2 ft. minimum distance). On dual exhaust cars use the left side tail pipe (side opposite heat valve). It is very important that the probe and connecting tubing be free of leaks to prevent erroneous readings. If a garage exhaust system is used to conduct the exhaust gases away, a plenum chamber or other means must be used to reduce the vacuum of the exhaust system to ½ inch water or less.

(8) Connect the exhaust gas analyzer, warm up and calibrate according to manufacturer's instructions.

(9) Place clamp on hose between distributor vacuum control valve and intake manifold.

(10) Set the idle speed to the specified valve for the specific engine-transmission combination.

**IMPORTANT: When adjusting mixture screws to obtain the air/fuel ratio specified for CAP, do not turn the mixture screw more than 1/16 turn at a time. The combustion anaylzer is so sensitive that the ratio must be changed by very small increments if accurate readings are to be obtained. The meters read in air/fuel ratio so that a higher reading indicates a leaner mixture and vice versa.**

(a) Adjust each screw 1/16 turn richer (counterclockwise) and wait 10 seconds before reading the meter.

(b) If necessary, repeat step "a" until the meter indicates a definite increase in richness (lower reading). This step is very important since the meter reverses its readings and indicates a richer mixture as the carburetor is leaned out if the carburetor is set very lean.

(c) When it has been established that the meter is indicating a lower reading (richer mixture) when the

MyMopar.com

idle mixture screws are turned in the richer direction, proceed to adjust the carburetor to give 14.2 air/fuel ratio, turning the screws counterclockwise (richer) to lower the meter reading and clockwise (leaner) to increase the meter reading.

(d) If the idle speed changes as the mixture screws are turned, adjust the speed to the specified value and readjust the mixture as required so that 14.2 air/fuel ratio is obtained at the specified idle speed.

(e) If the idle is rough, the screws may be adjusted independently to achieve a smooth idle, provided the air/fuel ratio is held to the 14.2 value.

(11) Remove clamp from distributor vacuum valve hose. If idle speed changes materially check and set valve as described under "Distributor Vacuum Control Valve Adjustment."

# BBD SERIES CARBURETORS (1-1/4")

## INDEX


| | Page |
|---|---|
| Automatic Choke | 2 |
| Carburetor Adjustments | 28 |
| Accelerator Pump and Bowl Vent | 28 |
| Choke Unloader (wide open kick) | 30 |
| Fast Idle Adjustment | 29 |
| Fast Idle Speed Adjustment (on the vehicle) | 31 |
| Idle Speed Adjustment | 30 |
| Closed Crankcase Vent System | 2 |
| Cleaning Carburetor Parts | 1 |
| Disassembling the Carburetor | 25 |
| Inspection and Reassembly | 26 |
| Specifications | 88 |


## GENERAL INFORMATION

The Ball and Ball Standard Carburetor models BBD-4113S and BBD-4114S are used on the 273 cu. in. engine when the vehicle is equipped with a manual or automatic transmission respectively.

Special (CAP-Cleaner Air Package) Ball and Ball Carburetor models BBD-4115S (with Dash pot) and BBD-4116S are used on the 273 cu. in. engine when the vehicle is equipped with a manual or automatic transmission respectively.

The dash pot (used on manual transmission equipped vehicles) is mounted on the carburetor and retards the return of the throttle to idle position. **The proper adjustment of the dash pot is very important.** (See Carburetor Adjustments.)

Since the service procedures are identical on all BBD carburetors, the illustrations showing the various disassembly procedures will not always show any one specific carburetor.

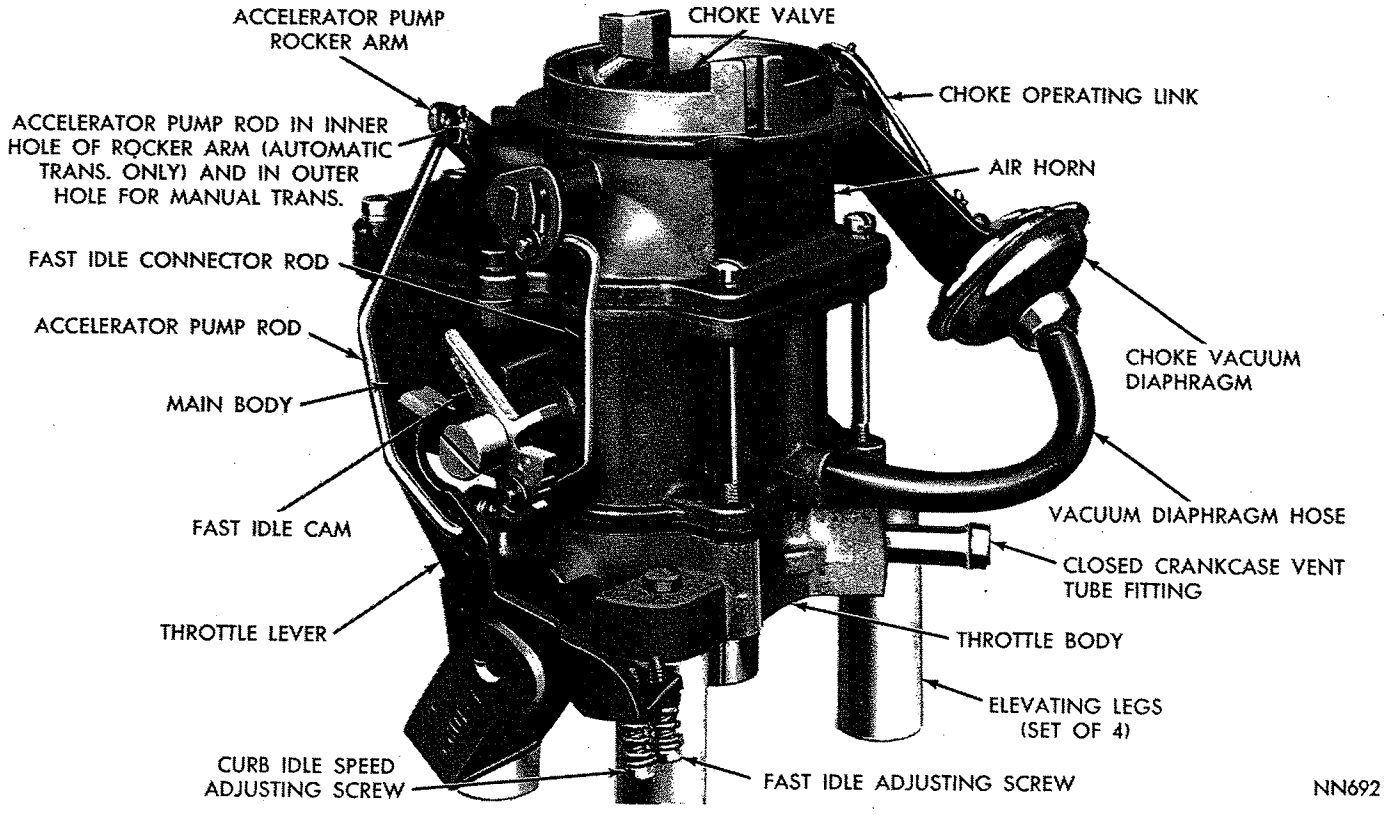


***Fig. 1—Standard Carburetor Assembly (BBD-4113S, BBD-4114S and CAP BBD-4116S)***

MyMopar.com

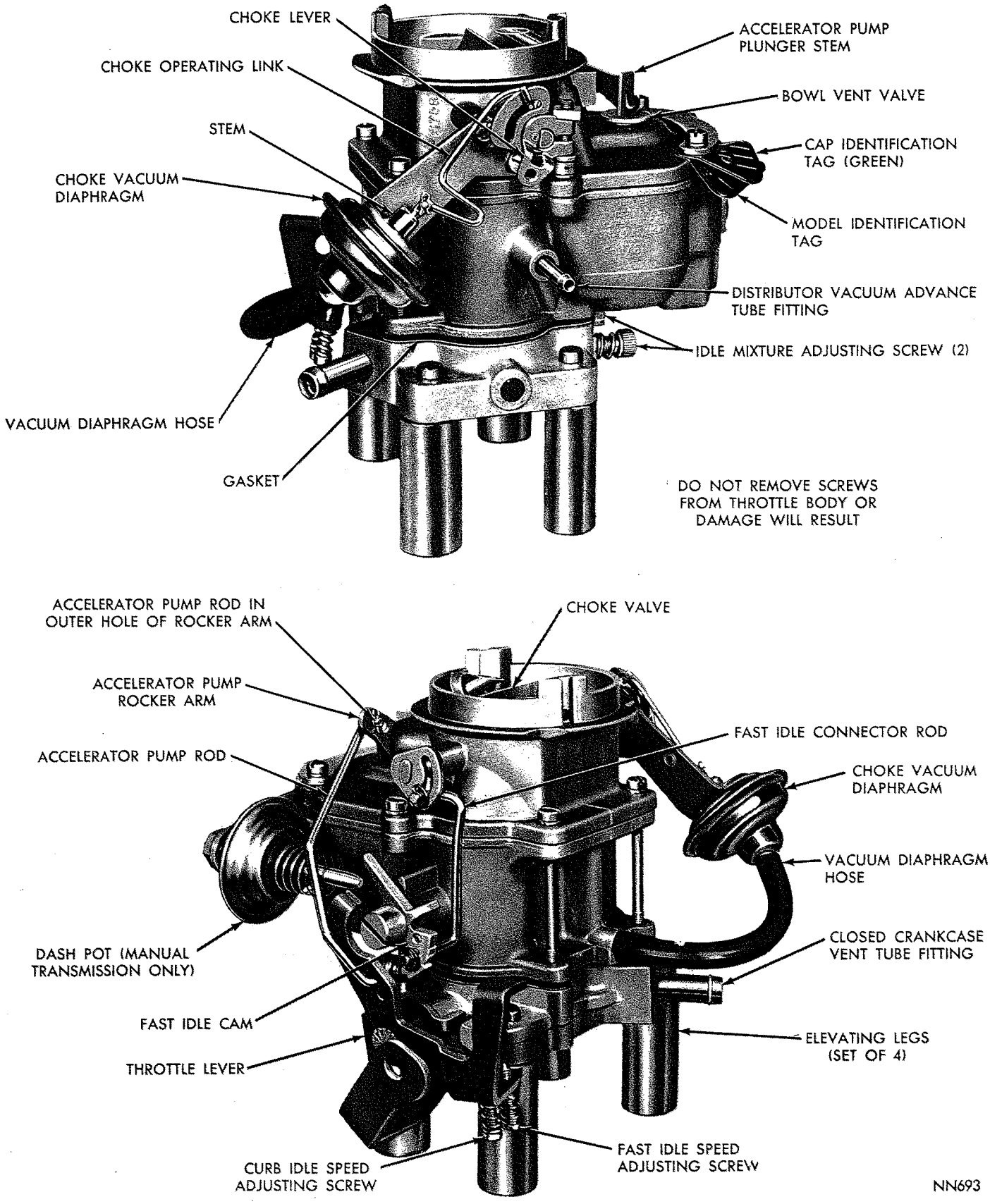


***Fig. 2—CAP Carburetor Assembly (BBD-4115S)***

MyMopar.com

## SERVICE PROCEDURES

### DISASSEMBLING THE CARBURETOR

To disassemble carburetor for cleaning or overhaul, refer to (Figs. 1 or 2.), and proceed as follows:

(1) Place carburetor assembly on repair block Tool C-3225.

(2) Remove hairpin clips and disengage accelerator pump operating rod. (On the 273 cubic inch engine, accelerator pump rod is located in the outer hole of the accelerator pump rocker arm, with manual transmission and in the inner hole with automatic transmission.)

(3) Remove clips and disengage the fast idle connector rod from fast idle cam and choke lever.

(4) Remove vacuum hose between carburetor main body and choke vacuum diaphragm.

(5) Remove clip from choke operating link and disengage link from the diaphragm plunger (stem) and choke lever. Refer to (Fig. 1).

(6) Remove choke vacuum diaphragm and bracket assembly and place to one side to be cleaned as a special item. **A liquid cleaner may damage the diaphragm material.**

(7) Remove air horn retaining screws and lift air horn straight up and away from main body, as shown in (Fig. 3). Discard gasket. Remove dash pot and bracket (if so equipped).

(8) Disengage accelerator pump plunger from rocker arm by pushing up on bottom of plunger and sliding plunger shaft off hook. Slide plunger out of air horn and remove bowl vent valve, spring seat and spring.

If the old plunger can be used again, or if a new plunger is to be installed, place the plunger in a jar of clean gasoline or kerosene to prevent the leather from drying out.

(9) Remove fuel inlet needle valve, seat and gasket from main body.

(10) Lift out float fulcrum pin retainer, then lift out floats and fulcrum pin.

(11) Remove step-up piston retaining screw, and slide step-up piston and rods out of well, as shown in (Fig. 4). Now, lift out step-up piston spring. Remove step-up piston gasket from the bottom of the well.

(12) Remove main metering jets, as shown in (Fig. 5).

(13) Remove venturi cluster screws, then lift venturi cluster and gaskets up and away from main body, as shown in (Fig. 6). Discard gaskets. **Do not remove the idle orifice tubes or main vent tubes from the cluster.** They can be cleaned in a solvent and dried with compressed air.

(14) Invert carburetor and drop out accelerator pump discharge and intake check balls.

**On the CAP carburetors, do not remove idle mixture adjusting screws from the throttle body. These screws have limited travel and will be broken if removed.**

(15) Remove screws that attach the throttle body to main body. Separate bodies.

(16) Test freeness of the choke mechanism in air horn. The choke shaft must float free to operate correctly. If choke shaft sticks in bearings, or appears to be gummed from deposits in air horn, a thorough cleaning will be required.

The carburetor now has been disassembled into three main units, namely, the air horn, main body and throttle body and the component parts of each disassembled as far as necessary for cleaning and inspection.

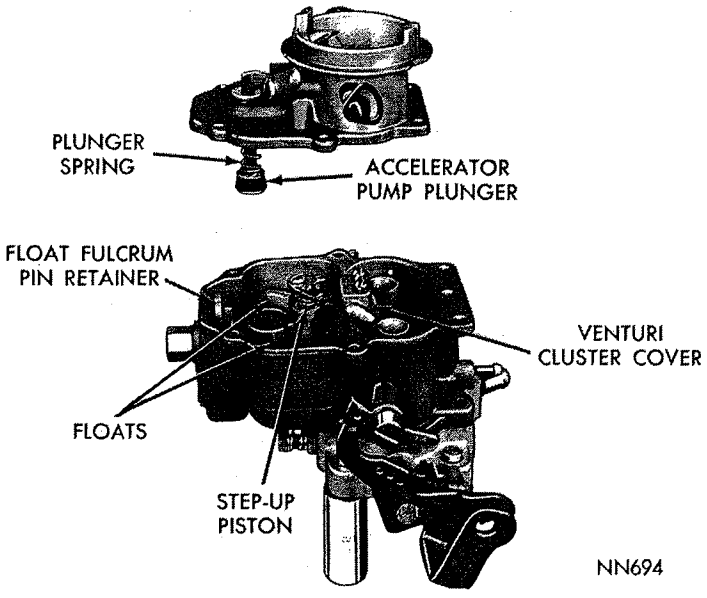


*Fig. 3—Removing or Installing the Air Horn*

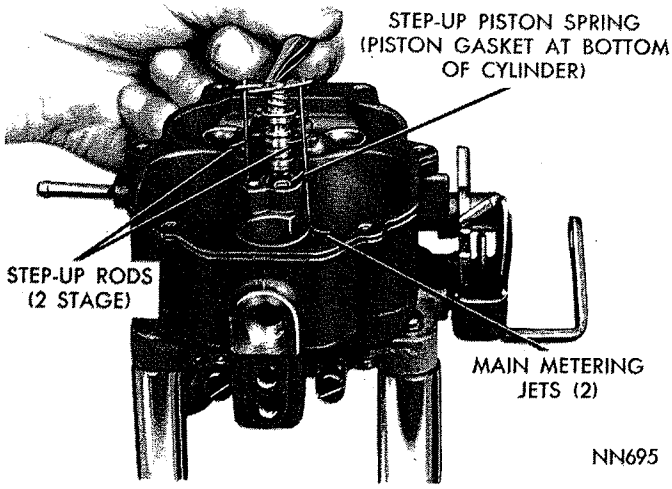


*Fig. 4—Removing or Installing Step-Up Piston*

MyMopar.com

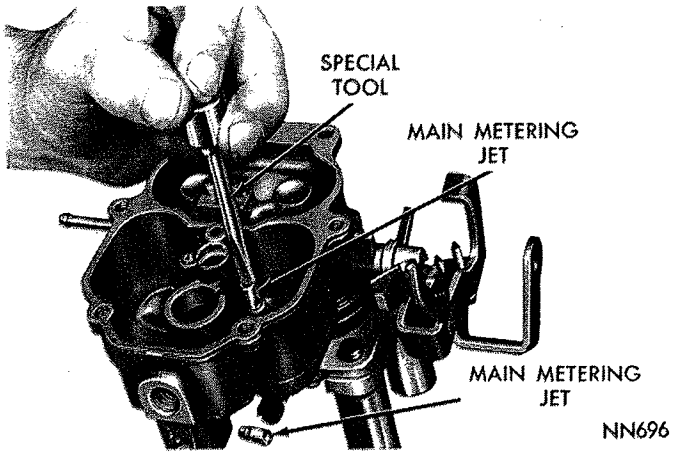


*Fig. 5—Removing or Installing Main Metering Jets*

It is usually not advisable to remove the throttle shaft or valves from the throttle body, unless wear or damage necessitates the installation of new parts.

## INSPECTION AND REASSEMBLY

### Throttle Body

(1) Check throttle shaft for excessive wear in the throttle body. (If wear is extreme, it is recommended that the throttle body assembly be replaced rather than installing a new shaft in the old body.)

During manufacture, the location of the idle transfer port and the spark advance control ports to the throttle valve, is carefully established for one particular assembly. See (Fig. 7).

If a new shaft should be installed in an old, worn throttle body, it would be very unlikely that the original relationship of the ports to the valves would be obtained. Changing the relationship of the valves to the ports would adversely affect normal vehicle operation between the speeds of 15 and 30 miles per hour. However, if it has been determined that a new shaft or valves is to be installed, adhere to the following instructions:

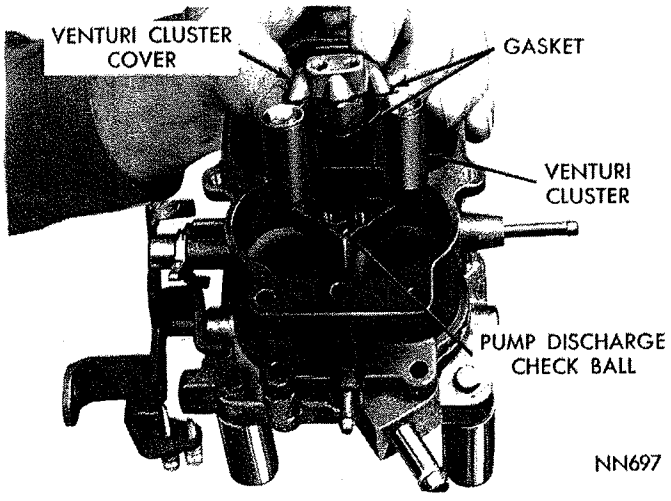


*Fig. 6—Removing or Installing Venturi Cluster*

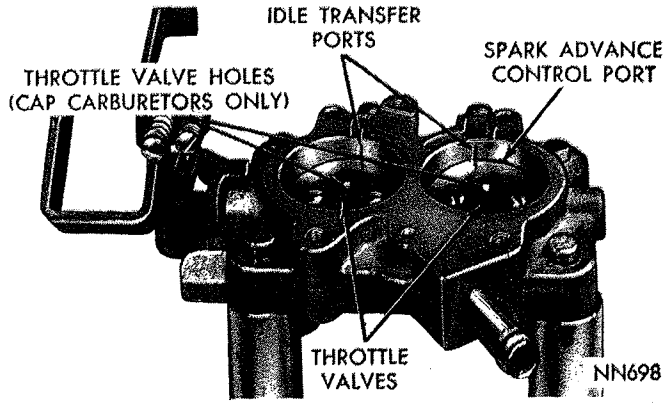


*Fig. 7—Ports in Relation to Throttle Valves*

(2) Mark position of throttle valves to shaft, then slide the valves out of the bores. **CAUTION: These screws are staked on the opposite side and care should be used at removal so as not to break off in the shaft.**

(4) Slide throttle shaft out of throttle body.

(5) Slide new throttle shaft into throttle body.

(6) Install throttle valves in their respective bores (with valve numbers toward manifold flange). Install **NEW** screws but do not tighten. Hold the valves in place, with fingers pressing on high sides of the valves. Tap valves lightly with a screwdriver to seat valves in throttle bores. Now, tighten screws securely and stake by squeezing with pliers.

### Main Body

(1) Invert main body and place insulator in position, then place throttle body on main body and align. Install screws and tighten securely.

(2) Install accelerator pump discharge check ball (5/32 inch diameter) in discharge passage, as shown in (Fig. 8). Drop accelerator pump intake check ball (3/16 inch diameter) into the bottom of the pump cylinder.

To check the accelerator pump system; fuel inlet and discharge check balls, proceed as follows:

(3) Pour clean gasoline into carburetor bowl, approximately ½ inch deep. Remove pump plunger

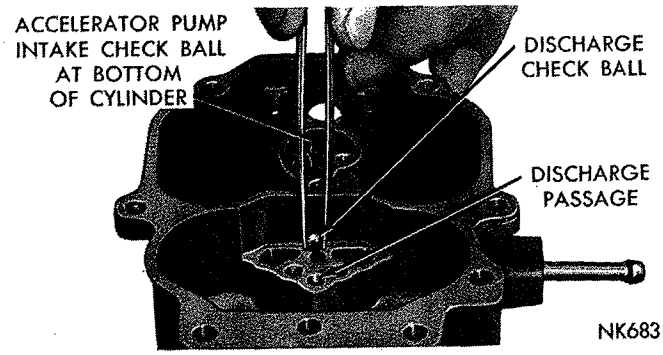


*Fig. 8—Installing Accelerator Pump Discharge Check Ball*

MyMopar.com

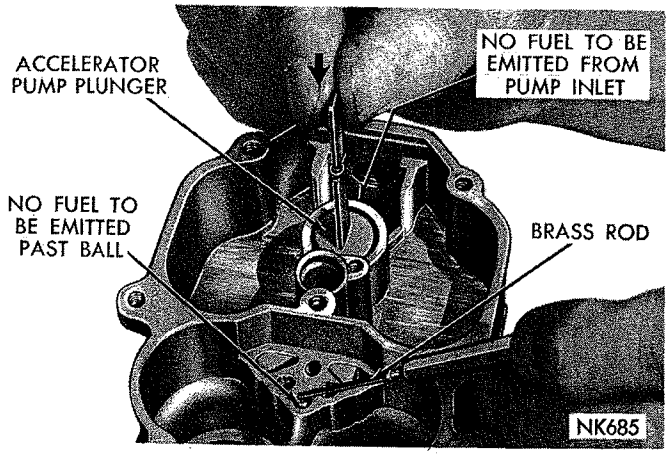


***Fig. 9—Testing Accelerator Pump Intake and Discharge Check Balls***

from jar of gasoline and slide down into pump cylinder. Raise plunger and press lightly on plunger shaft to expel air from the pump passage.

(4) Using a small clean brass rod, hold discharge check ball down firmly on its seat. Again raise the plunger and press downward. No fuel should be emitted from either the intake or discharge passage, as shown in (Fig. 9).

If any fuel does emit from either passage, it indicates the presence of dirt or a damaged check ball or seat. Clean passage again and repeat test. If leakage is still evident, install new check balls. The fuel inlet check ball is located at bottom of the plunger well. Remove fuel from bowl.

(5) Install new gaskets on venturi cluster, then install in position in main body. Refer to (Fig. 6). Install the cluster screws and tighten securely.

(6) Install main metering jets and tighten securely. Refer to (Fig. 5).

(7) Before installing step-up piston, be sure the step-up rods are able to move freely each side of vertical position, as shown in (Fig. 10). The step-up rods must be straight and smooth.

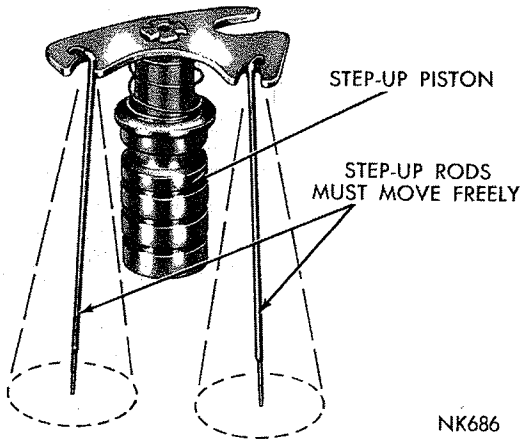


***Fig. 10—Step-Up Piston and 2 Stage Rods***

(8) Slide step-up piston gasket down into position in piston well, then install the step-up piston spring and step-up piston and rods. Carefully guide step-up rods into the main metering jets. Refer to (Fig. 4). Install retaining screw and tighten securely.

A step-up piston stuck in the **UP** position will cause a rich mixture at part throttle, whereas a piston stuck in the **DOWN** position will cause a lean mixture at wide open throttle and poor acceleration.

### *Checking Float Setting*

The carburetors are equipped with a synthetic rubber tipped fuel inlet needle. The needle tip is a rubber material which is not affected by gasoline and is stable over a wide range of temperatures. The tip is flexible enough to make a good seal on the needle seat, and to give increased resistance to flooding.

The use of the new inlet needle requires a new procedure in adjusting the float setting. Care should be taken to perform this accurately in order to secure the best performance and fuel economy.

To correctly set the float height, when the carburetor is being overhauled, proceed as follows:

(1) Install floats with the fulcrum pin and pin retainer in the main body.

(2) Install needle, seat and gasket in the body and tighten securely.

(3) Invert main body (catch the pump intake check ball) so that weight of floats **only,** is forcing needle against seat. Hold finger against retainer to fully seat fulcrum pin.

(4) Using Tool T109-282 or a "T" scale, check the float, as shown in (Fig. 11). There should be ¼ inch from surface of fuel bowl to crown of each float at the center.

If an adjustment is necessary, hold the floats on the bottom of the bowl and bend the float lip toward or away from the needle. Recheck the ¼ inch setting again then repeat the lip bending operation as required. **CAUTION: When bending the float lip, do not allow the lip to push against the needle as the synthetic rubber tip can be compressed sufficiently to**

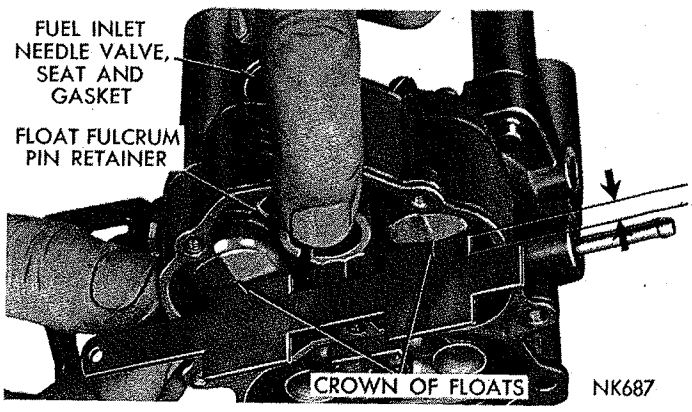


***Fig. 11—Checking the Float Setting***

MyMopar.com

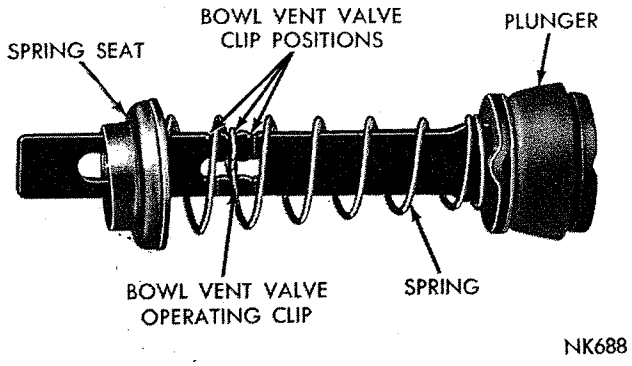


*Fig. 12—Accelerator Pump Assembly*

**cause a false setting which will affect correct level of fuel in the bowl.** After being compressed, the tip is very slow to recover its original shape.

It is very important that the float lip be perpendicular to the needle or slanted not more than ten degrees away from the needle when the float is set correctly.

### Air Horn

(1) Assemble pump plunger, spring and spring seat, as shown in (Fig. 12). Slide plunger shaft through opening in air horn. Install bowl vent valve over plunger shaft, then engage with pump rocker arm.

(2) Place a new gasket on main body, then install air horn. Refer to (Fig. 3). Install attaching screws and tighten securely. (When installing air horn be sure the leather on the plunger does not fold back.) Install dash pot (if so equipped).

(3) Engage fast idle connector rod in the choke lever and fast idle cam. Secure with clips.

(4) Engage accelerator pump operating rod in the proper hole in the rocker arm (depending on carburetor) and in the center hole in the throttle lever. Refer to (Fig. 1). Install clips to secure.

### Choke Vacuum Diaphragm

Inspect the diaphragm vacuum fitting to insure that the passage is not plugged with foreign material. Leak check the diaphragm to determine if it has internal leaks. To do this, first depress the diaphragm stem, then place a finger over the vacuum fitting to seal the opening. Release the diaphragm stem. If the stem moves more than 1/16 inch in 10 seconds, the leakage is excessive and the assembly must be replaced.

Install the diaphragm assembly on the air horn as follows:

(1) Assemble to air horn and tighten the attaching screws securely.

(2) Install choke operating link in position between diaphragm plunger (stem) and the choke lever. Install clip to secure.

(3) Inspect the rubber hose for cracks before placing it on the correct carburetor fitting. Refer to (Fig. 1). Do not connect vacuum hose to diaphragm fitting until after the vacuum kick adjustment has been made. (See Carburetor Adjustments.)

## CARBURETOR ADJUSTMENTS

It is very important that the following adjustments be made on a reconditioned carburetor, and in the sequence listed:

### Accelerator Pump and Bowl Vent

When assembling the accelerator pump to the air horn, note that the hair pin clip (which opens the bowl vent) can be placed in any one of three positioning notches. These notches correspond to the long, medium and short pump stroke holes in the throttle lever. Normally, the bowl vent clip on the pump stem will be at the middle notch and the pump operating rod in the medium stroke hole.

The proper procedure is to adjust the amount of bowl vent opening instead of measuring and setting the height of the pump plunger.

To check or set the adjustment, proceed as follows:

(1) Back off idle speed adjusting screw. Open choke valve so that fast idle cam allows the throttle valves to be completely seated in bores.

(2) Be sure pump operating rod is in medium stroke hole in throttle lever, and that bowl vent clip on pump stem is in center notch.

(3) Close throttle valves tightly. It should be just possible to insert a 1/16 inch drill between bowl vent and its seat, as shown in (Fig. 13).

If an adjustment is necessary, bend the pump operating rod, using Tool T109-213, at the lower angle, until the correct bowl vent opening has been obtained. On CAP model carburetors, bend pump operating rod to give a height of pump plunger stem above bowl cover of 1 to 1-1/32 inch.

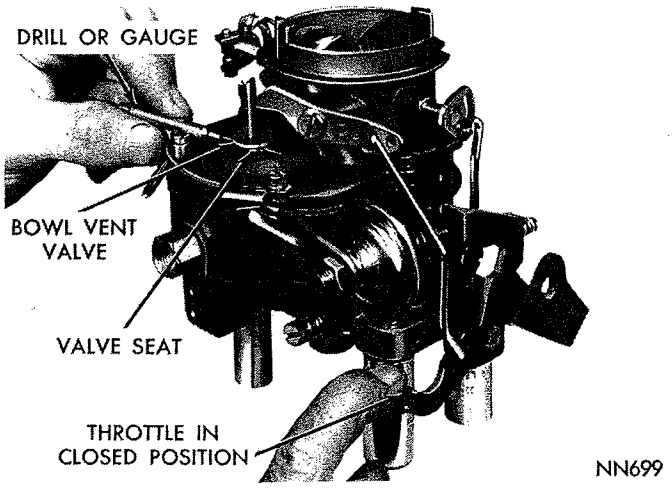


*Fig. 13—Checking Bowl Vent Opening*

MyMopar.com

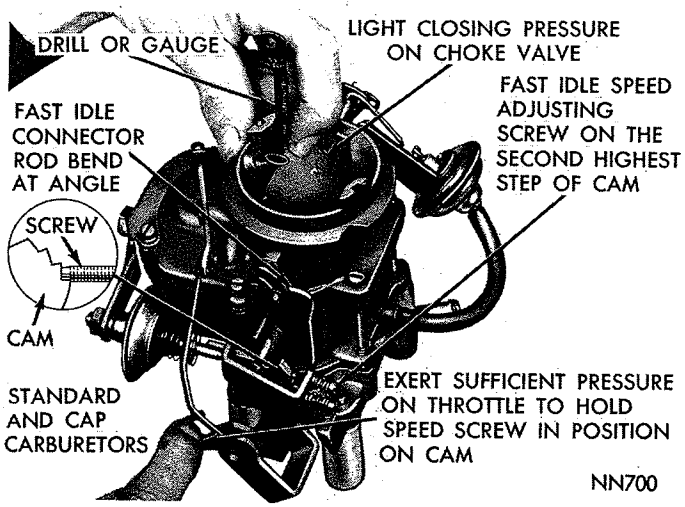


***Fig. 14—Fast Idle Cam Position Adjustment***

This is an important adjustment, since too much lift at the bowl vent will result in considerable loss in low speed fuel economy.

Remember that if the pump operating rod is moved to either the short or long stroke position, a corresponding change must be made in the location of the bowl vent clip, and the amount of lift of the bowl vent rechecked and adjusted.

### *Fast Idle Speed and Cam Position Adjustment*

The fast idle engine speed adjustment should be made on the vehicle, as described in the Fast Idle Speed Adjustment (On the Vehicle) Paragraph. However, the Fast Idle Cam Position Adjustment can be made on the bench. This adjustment is important to assure that the speeds of each cam step occur at the proper time during engine warm-up. Adjust as follows:

(1) With fast idle speed adjusting screw contacting step on the fast idle cam shown in (Fig. 14), move choke valve toward closed position with light pressure. Insert a Number 41 drill (.095") (manual trans. or automatic trans.) between the choke valve and wall of the air horn.

(2) An adjustment will be necessary if a slight drag is not obtained as the drill or gauge is being removed.

(3) If an adjustment is necessary, bend fast idle connector rod at angle, using Tool T109-213, until correct valve opening has been obtained. Refer to (Fig. 14).

### *Vacuum Kick Adjustment—(This test can be made ON or OFF vehicle.)*

The choke diaphragm adjustment controls the fuel delivery while the engine is running. It positions the choke valve within the air horn by action of the linkage between the choke shaft and the diaphragm. The diaphragm must be energized to measure the vacuum kick adjustment. Use either a distributor test machine with a vacuum source or vacuum supplied by another vehicle. Adjust as follows:

(1) With engine **Not** running, open throttle valves far enough to allow choke valve to be moved to closed position.

(2) Disconnect vacuum hose from diaphragm and connect hose from vacuum supply as shown in (Fig. 15). A minimum of 10 inches of mercury (HG) will be required.

(3) Insert a Number 16 drill (manual transmission) or a Number 30 drill (automatic transmission) between the choke valve and wall of air horn on either the CAP or Standard Carburetors (Fig. 15). Apply sufficient closing pressure on the choke shaft lever to provide the smallest choke valve opening possible without distortion of the diaphragm link. Note that the cylindrical stem of the diaphragm will extend as an internal spring is compressed. The spring must be fully compressed for proper measurement of the kick adjustment.

(4) An adjustment will be necessary if a slight drag is not obtained as the drill or gauge is being removed.

The adjustment of this opening will require the removal of the choke operating link. **DAMAGE TO THE DIAPHRAGM AND THE CHOKE LEVER SLOT CAN RESULT, IF THE LINK IS NOT REMOVED FOR THE BENDING OPERATION.**

(5) Remove clip and disengage choke operating link from diaphragm stem, then disengage link from choke lever. (The best bending results will be obtained by using a vise and a pair of pliers.)

(6) Bend choke operating link at angle to provide correct choke valve opening. **CAUTION: A Correction in the length of the link of .010 inch, will result in a change of .015 inch in the choke valve opening.**

As an example, if choke valve opening is 0.015 inch in error, correction in the link length would be .010 inch.

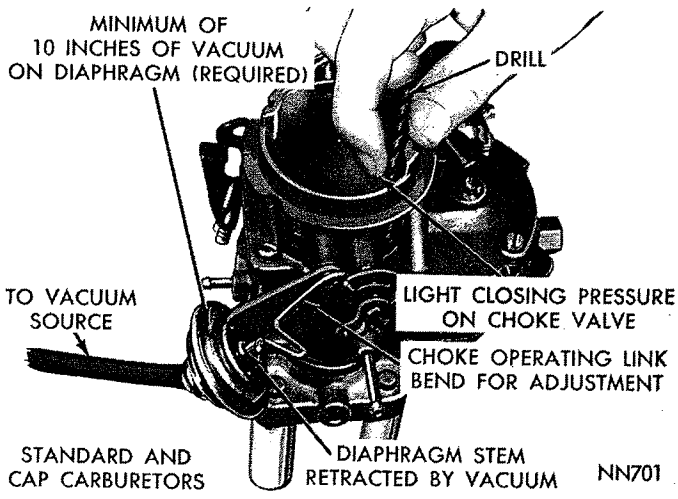


***Fig. 15—Checking the Choke Vacuum Kick Setting***

MyMopar.com

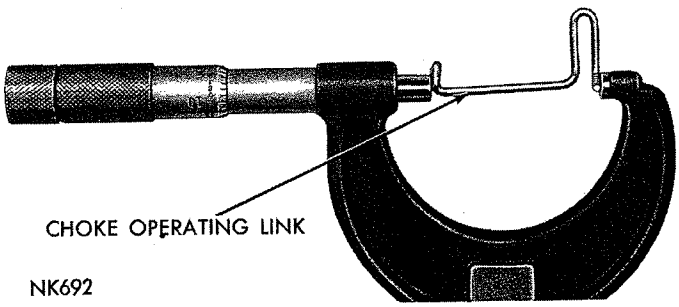


*Fig. 16—Choke Operating Link Measurements*

A "2" inch micrometer will be helpful in establishing original length of the link, as shown in (Fig. 16), before completing the adjustment.

(7) Install choke operating link and recheck choke valve opening, using a gauge or drill. Refer to (Fig. 15).

Reinstall vacuum hose to diaphragm and make the following check:

(8) With no vacuum applied to diaphragm, some clearance should exist between the choke operating link and choke lever slot, in both open and closed choke valve positions, as shown in (Fig. 17). **This clearance is necessary to allow the choke valve to close for starting as well as fully open after the engine reaches the normal operating temperature.**

If a clearance does not exist in both of these positions, a recheck of the operating link adjustment should be made.

**Free movement of the choke valve between the closed and open positions is very necessary.**

This free movement should also exist between the kick and the open choke valve positions with the engine running. If binding does exist, the choke operating link has been improperly bent and should be corrected.

### Choke Unloader (Wide Open Kick)

(1) Hold throttle valves in wide open position. Insert Tool T109-31 or ¼" drill shank between upper

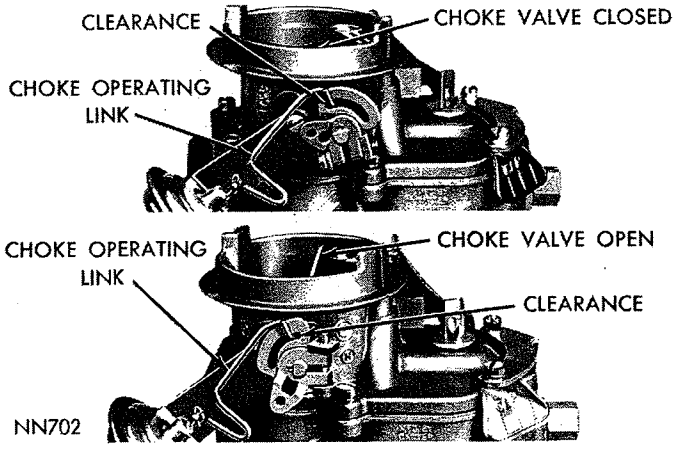


*Fig. 17—Choke Operating Link Clearances*

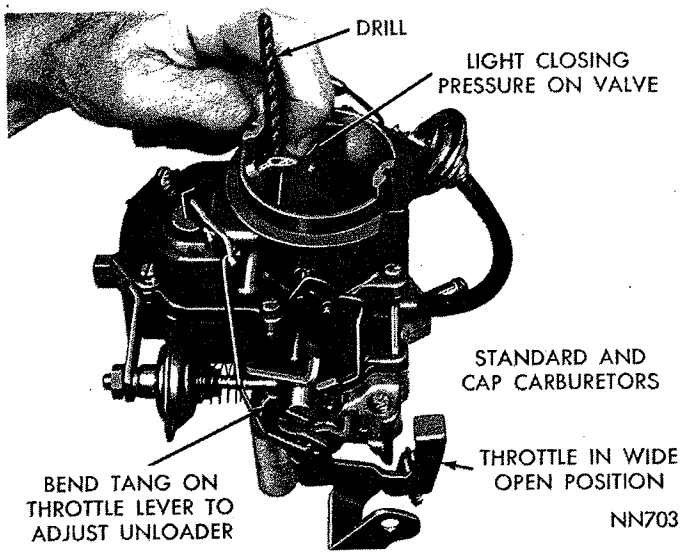


*Fig. 18—Measuring the Choke Unloader Setting*

edge of choke valve and inner wall of the air horn, as shown in (Fig. 18).

(2) If no drag is felt, or if too much drag is apparent, bend unloader tang on throttle lever, until correct clearance has been obtained.

### Idle Speed Adjustment (Curb Idle) (Standard Carburetors)

To make the idle speed adjustment, the engine must be thoroughly warmed up. A much more reliable idle adjustment can usually be obtained if the car has been driven a minimum of five miles. For the best results, it is recommended that a tachometer be used in this adjustment. (Before making the idle speed adjustment, observe the following precautions:)

Because the alternator can charge at idle speeds and impose a load on the engine, the headlights should be turned on (high beam). This will assure setting the idle to compensate for the alternator load. On vehicles equipped with the automatic transmission, disconnect the transmission control rod from the carburetor lever so that the stop in the transmission will not interfere with the free movement of the carburetor throttle lever.

To make the idle speed adjustment, proceed as follows:

(1) Turn idle speed screw **in** or **out** to obtain 500 r.p.m. (On cars with air conditioning, set idle speed at 500 r.p.m., with air conditioning **On.**) Be sure that choke valve is fully open and that fast idle adjusting screw is not contacting the fast idle cam.

(2) Turn each idle mixture screw to obtain the highest r.p.m. While making adjustment, carefully watch tachometer and notice that speed can be decreased by turning screws in either direction from setting that gave the highest r.p.m. reading.

(3) Readjust to 500 r.p.m. with idle speed screw.

MyMopar.com

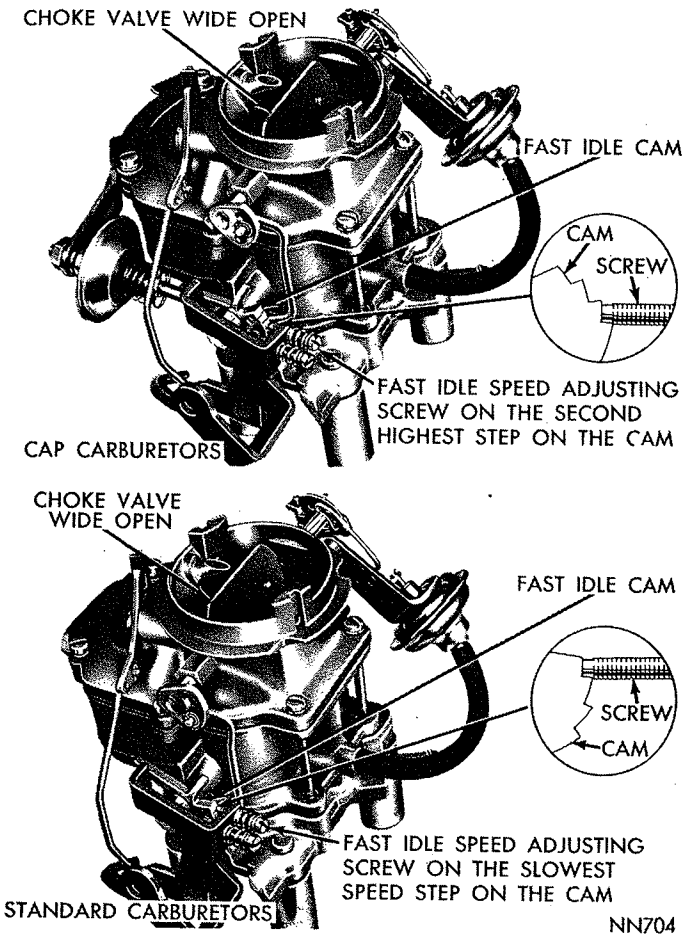


***Fig. 19—Fast Idle Speed Adjustment (on the Vehicle)***

(4) Turn each idle mixture adjusting screw in clockwise direction (leaner) until there is a slight drop in r.p.m. Now, turn each screw out counterclockwise (richer) just enough to regain the lost r.p.m.

This procedure will assure that idle has been set to leanest mixture possible for smooth idle. **This setting is very important.**

Since correct speed was originally set using the speed screw, speed obtained after finding the leanest smooth idle setting will probably be too fast.

(5) Readjust speed screw to obtain correct idle speed. Repeat steps 2 and 4 above if necessary. After the proper idle speed has been obtained, refer to Throttle Linkage Group in this Section, for the procedure on adjusting the transmission control rod.

### *Fast Idle Speed Adjustment (On Vehicle)**

To set the fast idle speed on the car, connect a tachometer to the vehicle, then set the curb idle speed and proceed as follows:

(1) With engine running and transmission in the neutral position, open the throttle slightly.

(2) **On Standard Corburetors,** close the choke valve about 20 degrees then allow throttle to close. Return choke valve to the open position. The fast idle speed adjusting screw should contact the slowest speed step on fast idle cam (Fig. 19).

(3) **On CAP Carburetors,** open the throttle until the fast idle speed screw can be positioned on the second highest step of the cam (Fig. 19). **The air cleaner must be installed while measuring the engine speed.**

*After Approx. 500 Miles (If Necessary).

(4) With engine warmed-up to normal operating temperature, turn fast idle speed adjusting screw **in** or **out** to secure 700 r.p.m. (Standard Carburetors), 1400 rpm (CAP) manual transmission or 1500 rpm (CAP) automatic transmission** **Reposition the cam and throttle after every screw adjustment to apply normal throttle closing torque.**

****Special Note: CAP Equipped Vehicles**

Before adjusting idle and/or fast idle speeds and mixtures, make sure that the basic timing and the distributor control valve are correctly adjusted as outlined under Idle Speed Adjustment (Curb Idle) CAP Carburetors.

## DASHPOT SETTING AND ADJUSTMENT—C.A.P. CARBURETOR

### *(Manual Transmission Only)*

With the curb idle speed and mixture properly set and a tachometer installed, position the throttle lever so that the actuating tab on the lever is contacting the stem of the dashpot but not depressing it. The tachometer should read 20000 rpm if the setting is correct. To adjust the setting if necessary, screw the dashpot in or out as required. When the desired setting is obtained, tighten the lock nut on the dashpot against the bracket.

### Idle Speed Adjustment (Curb Idle) CAP Carburetors

To make the idle speed adjustment on CAP carburetors secure an accurate ignition tachometer and a Sun Electric Combustion-Vacuum Unit, Model 80, Exhaust Condenser, Model EC, and Hose 669-14 or equivalent. (The above analyzers are recommended; however, other reliable makes of analyzers in good condition may be used.) Procced as follows:

(1) Engine running at normal operating temperature, and timing checked and set at 5° at ATDC.

(2) Air Cleaner installed.

(3) Six cylinder engines only—turn headlights on high beam position.

(4) Automatic transmissions in neutral position (not in park position).

(5) On air conditioned vehicles, turn air conditioning **off.**

(6) Connect ignition tachometer.

(7) Insert probe of the exhaust gas analyzer in the tail pipe as far as possible (2 ft. minimum distance). On dual exhaust cars use the left side tail pipe (side opposite heat valve). It is very important that the probe and connecting tubing be free of leaks to prevent erroneous readings. If a garage exhaust system is

MyMopar.com

used to conduct the exhaust gases away, a plenum chamber or other means must be used to reduce the vacuum of the exhaust system to ½ inch water or less.

(8) Connect the exhaust gas analyzer, warm up and calibrate according to manufacturer's instructions.

(9) Place clamp on hose between distributor vacuum control valve and intake manifold.

(10) Set the idle speed to the specified value for the specific engine-transmission combination.

**IMPORTANT: When adjusting mixture screws to obtain the air/fuel ratio specified for CAP, do not turn the mixture screw more than 1/16 turn at a time. The combustion analyzer is so sensitive that the ratio must be changed by very small increments if accurate readings are to be obtained. The meters read in air/fuel ratio so that a higher reading indicates a leaner mixture and vice versa.**

(a) Adjust each screw 1/16 turn richer (counterclockwise) and wait 10 seocnds before reading the meter.

(b) If necessary, repeat step "a" until the meter indicates a definite increase in richness (lower reading). This step is very important since the meter reverses its readings and indicates a richer mixture as the carburetor is leaned out if the carburetor is set very lean.

(c) When it has been established that the meter is indicating a lower reading (richer mixture) when the idle mixture screws are turned in the richer direction, proceed to adjust the carburetor to give 14.2 air/fuel ratio, turning the screws counterclockwise (richer) to lower the meter reading and clockwise (leaner) to increase the meter reading.

(d) If the idle speed changes as the mixture screws are turned, adjust the speed to the specified value and readjust the mixture as required so that 14.2 air/fuel ratio is obtained at the specified idle speed.

(e) If the idle is rough, the screws may be adjusted independently to achieve a smooth idle, provided the air/fuel ratio is held to the 14.2 value.

(11) Remove clamp from distributor vacuum valve hose. If idle speed changes materially check and set valve as described under "Distributor Vacuum Control Valve Adjustment."

# WW SERIES STROMBERG CARBURETOR

## INDEX


| | Page |
|---|---|
| Automatic Choke | 2 |
| Carburetor Adjustments | 38 |
| Fast Idle Speed and Cam Position Adjustment | 38 |
| Unloader Adjustment (wide open kick) | 39 |
| Vacuum Kick Adjustment | 38 |
| Accelerator Pump and Bowl Vent Adjustment | 40 |
| Idle Speed Adjustment (curb idle) | 40 |
| Fast Idle Speed Adjustment (on the car) | 38 |
| Cleaning Carburetor Parts | 1 |
| Closed Crankcase Vent System | 2 |
| Disassembling the Carburetor | 32 |
| General Information | 32 |
| Inspection and Reassembly | 35 |
| Specifications | 88 |


## GENERAL INFORMATION

There are two models of the WW3 series carburetor, depending on the type of transmission with which the car is equipped. The same basic design applies to all models regardless of adaptions. Refer to Specifications for detailed information.

The Standard Stromberg WW3 series carburetor models WW3-258 and WW3-259 are used on the 318 cu. in. engines when the vehicles are equipped with the manual or automatic transmissions respectively.

The Special (CAP-Cleaner Air Package) Stromberg WW3 series carburetor models WW3-260 and WW3-261 are used on the 318 cu. in. engines when the vehicles are equipped with the manual or automatic transmissions respectively. The CAP carburetors are identified by a dab of green paint on the airhorn, over the top of the accelerator pump shaft.

# SERVICE PROCEDURES

## DISASSEMBLING THE CARBURETOR

To disassemble carburetor for cleaning or overhauling, refer to (Fig. 1), then proceed as follows:

(1) Place carburetor assembly on repair block Tool C-3225. (This Tool is used to protect throttle valves from damage and to provide a suitable base for working.)

(2) Remove cotterpin that holds the pump operating rod in center hole of throttle lever. Disengage rod from lever.

(3) Remove clip that retains fast idle rod, then disconnect the rod.

(4) Remove vacuum hose between carburetor air horn and vacuum diaphragm.

(5) Remove "E" clip from choke operating link at the choke lever and disengage link from vacuum diaphragm stem (plunger). Refer to (Fig. 1).

MyMopar.com

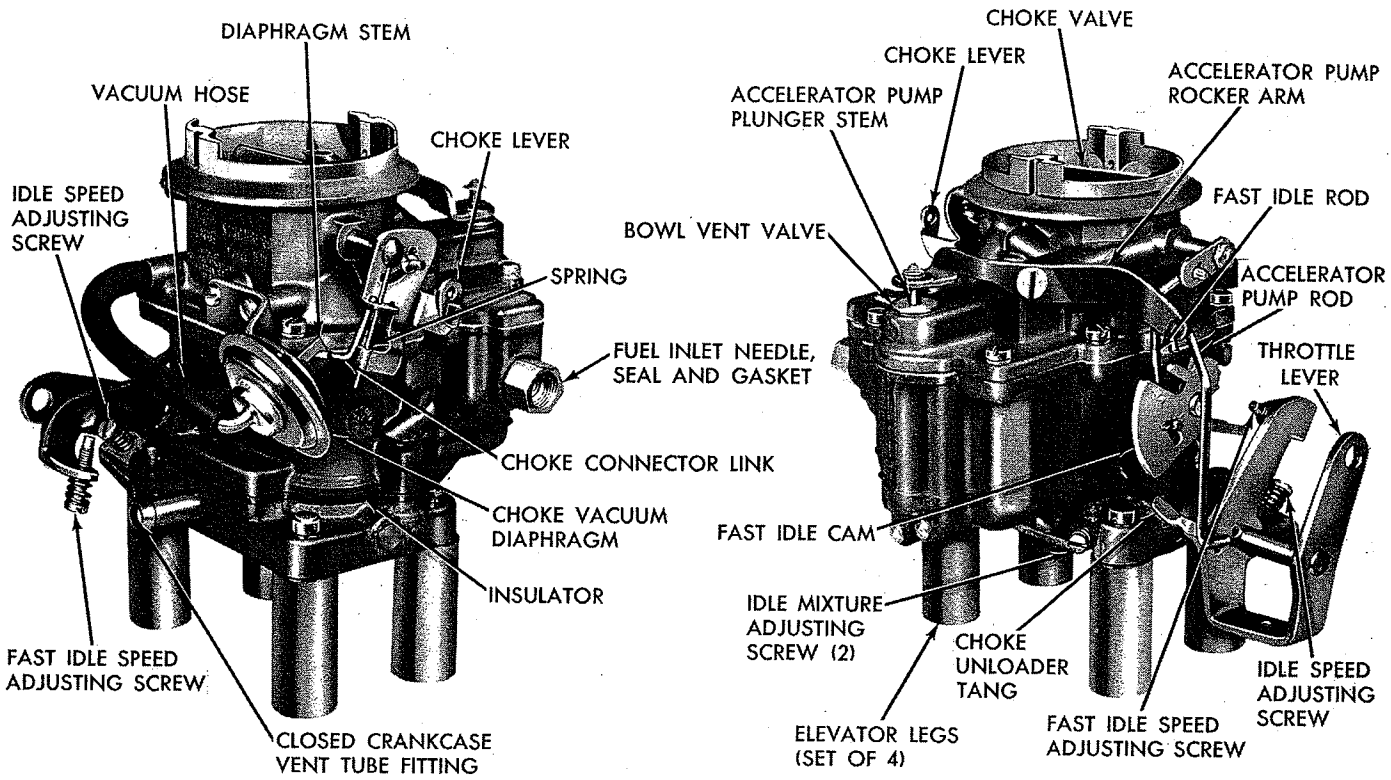


***Fig. 1—Carburetor Assembly WW3-258 and WW3-259 (Standard) WW3-260 and WW3-261 (CAP)***

(6) Remove choke vacuum diaphragm and bracket assembly and place to one side to be cleaned as a special item. **A liquid cleaner may damage the diaphragm material.**

(7) Remove air horn attaching screws and remove air horn.

(8) Disengage accelerator pump plunger rod from rocker arm by removing clip; and the bowl vent valve. Slide plunger and rod out of the air horn. Slide compression spring off rod.

**Place accelerator pump plunger in a jar of clean gasoline or kerosene to prevent leather from drying out.**

(9) Remove vacuum power piston from the air horn, using an open end wrench and a support, as shown in (Fig. 2). (Exert sufficient pressure on end of wrench to force pistion out of air horn. This assembly is staked and care should be used at removal.)

(10) Lift idle tubes out of main body, as shown in (Fig. 3). (The idle tubes are interchangeable.)

(11) Remove screw and gasket from accelerator pump discharge cluster, then lift off cluster and gasket, as shown in (Fig. 4).

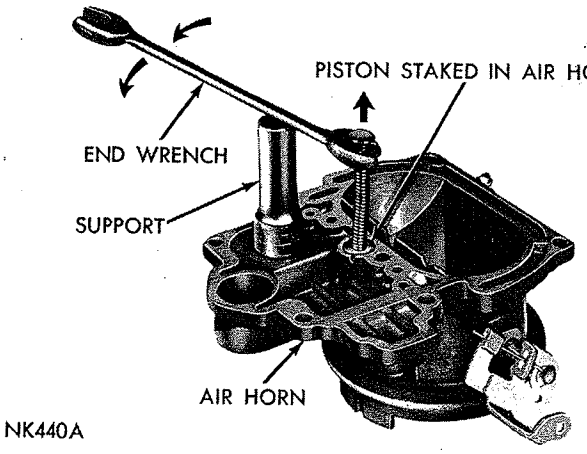


***Fig. 2—Removing the Vacuum Power Piston***

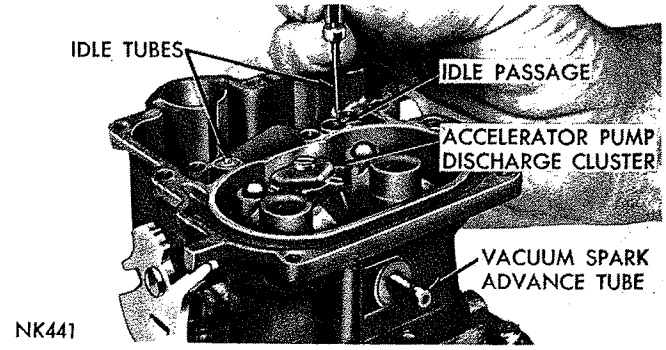


***Fig. 3—Removing or Installing Idle Tubes***

MyMopar.com

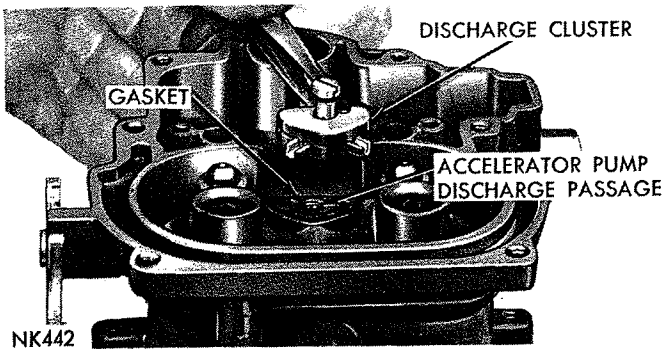


***Fig. 4—Removing or Installing Discharge Cluster***

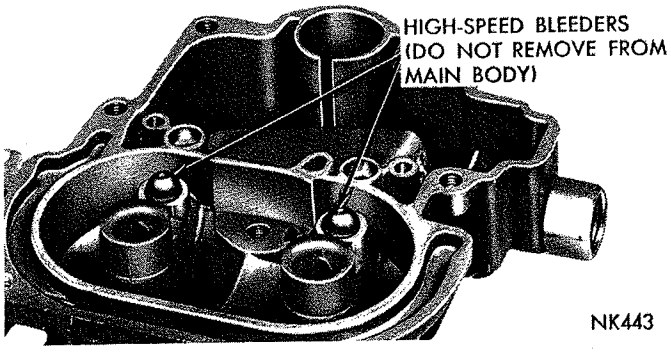


***Fig. 5—High Speed Bleeders***

(12) Invert carburetor main body, and drop out accelerator pump inlet and discharge check balls.

(13) **Do not attempt to remove the high-speed bleeders located in the main discharge strut section of the carburetor main body. See (Fig. 5).**

(14) Remove fuel inlet needle valve seat and gasket assembly. Discard gasket. Remove fuel bowl baffle.

(15) Using a small screwdriver, pry out float fulcrum pin retaining spring. (Cup the hand over the float chamber to prevent spring from flying out.) Lift out float and fulcrum pin.

(16) Remove power by-pass jet and gasket, (Fig. 6).

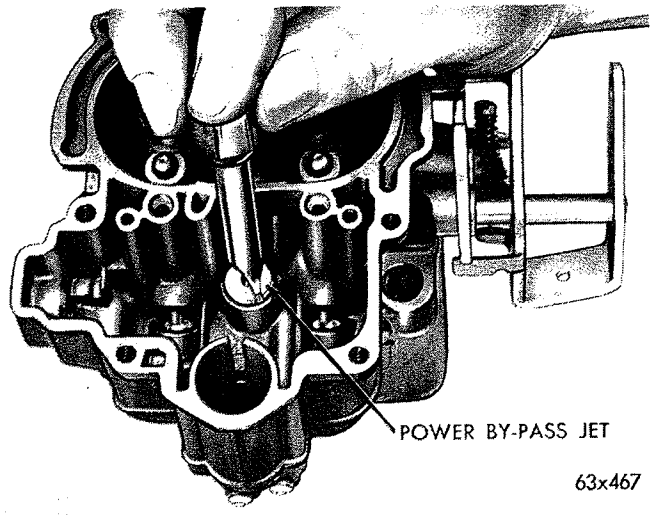


***Fig. 6—Removing or Installing Power By-Pass Jet***

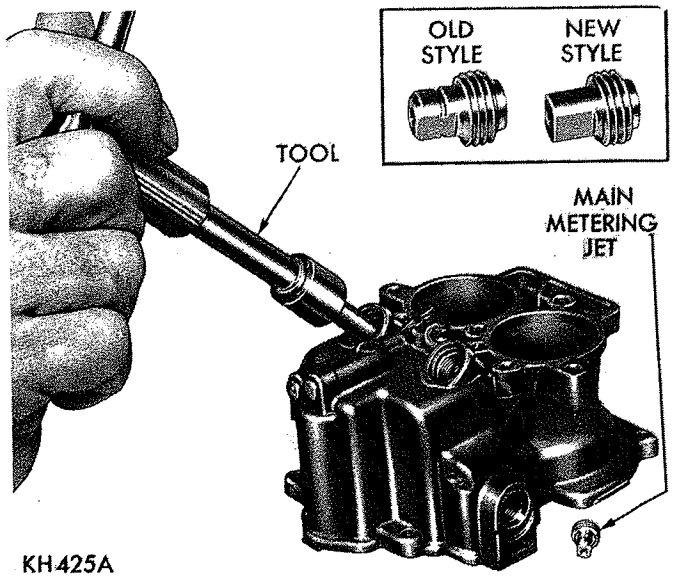


***Fig. 7—Removing or Installing Main Metering Jets***

(17) Remove screws and lockwashers that hold the throttle body to main body. Lift off the throttle body.

(18) With main body in an inverted position, remove main jet plugs; using Tool 73598 and 73609. Discard the plug gaskets.

(19) Using Tool 73606, remove main steering jets, as shown in (Fig. 7). Do not substitute main metering jets NO. 388208 used in previous carburetors for NO. 388539. (New type.)

(20) Now, remove main discharge jets (or tubes), using Tool 73608. This Tool has tapered right hand thread and should be screwed into jet. The threads that are formed in jet during removal, will not damage the jet.

(21) Unscrew and remove idle mixture adjusting screws and springs, from throttle body.

The carburetor now has been disassembled into three units, namely, the air horn, main body and throttle body, and the component parts of each disassembled as far as necessary for cleaning and inspection.

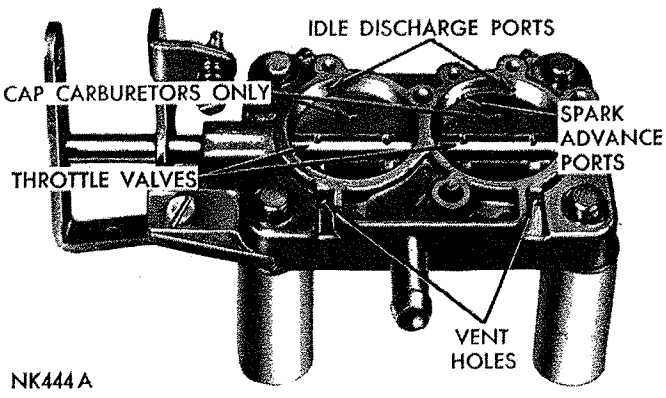


***Fig. 8—Ports in Relation to Throttle***

MyMopar.com

**It is usually not advisable to remove the throttle shaft or valves unless wear or damage necessitates installation of new parts. To install new valves or throttle shaft, refer to Inspection and Reassembly Paragraph.**

## INSPECTION AND REASSEMBLY

### *Throttle Body*

(1) Check throttle shaft for excessive wear in the throttle body. If wear is extreme, it is recommended that the throttle body be replaced, rather than installing a new throttle shaft in the old body.

During manufacture, the location of the idle transfer port and the spark advance control ports to the valves is carefully established for one particular assembly. See (Fig. 8).

If a new shaft should be installed in an old worn throttle body, it would be very unlikely that the original relationship of these ports to the valves would be obtained. Changing the port relationship would adversely affect normal car operation between the speeds of 15 and 30 miles per hour. However, if it has been determined that a new shaft is to be installed, adhere closely to the following instructions:

(2) Mark the valves to be sure each is replaced in the same bore from whence removed.

(3) Remove screws, that hold throttle valves to throttle shaft, then slide valves out of throttle shaft. **CAUTION: These screws are staked on the opposite side and care should be used at removal so as not to break the screws in the shaft.**

(4) Slide throttle shaft out of the throttle body.

(5) Install new throttle shaft and lever in the throttle body. The fast idle lever should rest against the idle speed adjusting screw. **The idle speed adjusting screw must be backed out when seating the valves in the following operation.**

The "dash" stamped on the valves must be toward the idle port and visible from top of the throttle body when valves are installed.

(6) Slide valves in position through throttle shaft, then insert **NEW** screws, but do not tighten. Now hold valves in place with the fingers. (Fingers pressing on the high side of valves.)

(7) Tap valves lightly with a screwdriver to seat in throttle bores. Holding valves in this position, tighten screws securely and stake by squeezing with pliers.

(8) Install two idle mixture adjusting screws and springs in the throttle body. (The tapered portion must be straight and smooth.) If the tapered portion is grooved or ridged, a new idle mixture adjusting screw should be installed to insure having correct idle mixture control.

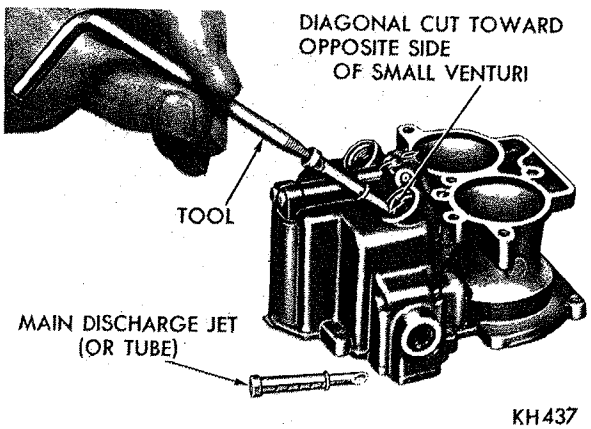


***Fig. 9—Installing Main Discharge Jets (or Tubes)***

### *Idle Mixture Screw Adjustment*

**DO NOT USE A SCREWDRIVER.** The adjustment should be made with the fingers. Turn the idle mixture adjusting screw lightly against its seat, then back off one full turn for approximate adjustment.

### *Reassembling the Carburetor Main Body*

(1) Place main discharge jets (or tubes) firmly on Tool 73608, as shown in (Fig. 9). Now, slide into position in main body. Be sure opening in the end of tube (diagonal cut ends) is facing opposite side of small venturi. **These two jets must be seated firmly in main body.**

(2) Insert main metering jets in body over discharge jets (or tubes) just installed. Tighten securely, using Tool 73606. See (Fig. 7).

(3) Slide new copper gaskets in the main jet plug openings, then insert the plugs and tighten securely.

(4) Place assembled throttle body on the inverted main body and position insulator. Install screws and lockwashers then tighten securely.

(5) Invert carburetor and place on repair block C-3225, then install power by-pass jet and new gaskets.

The change from the lean road load mixture to the richer wide open throttle maximum power mixture is made with an intermediate step. This is accomplished with a spring loaded two position power jet, actuated by vacuum on the power jet piston. The purpose of this two stage action is to secure best fuel economy in the lower road load speed range without sacrificing performance in the intermediate speed range.

During initial or part throttle operation, the vacuum above the piston is sufficient to overcome the compression spring and hold the piston in the up position. As the throttle valves are opened, the manifold vacuum drops and the piston compression spring moves the piston down to open the first stage valve (upper) of the power by-pass jet, as shown in (Fig. 12). This meters additional fuel through the upper hole, into the main metering system.

With increased demand for power and a further drop in vacuum, the piston moves down an additional amount to open the second stage valve (lower) as shown in (Fig. 12), and meters an additional amount of fuel through the hole at the bottom of the power by-pass jet.

MyMopar.com

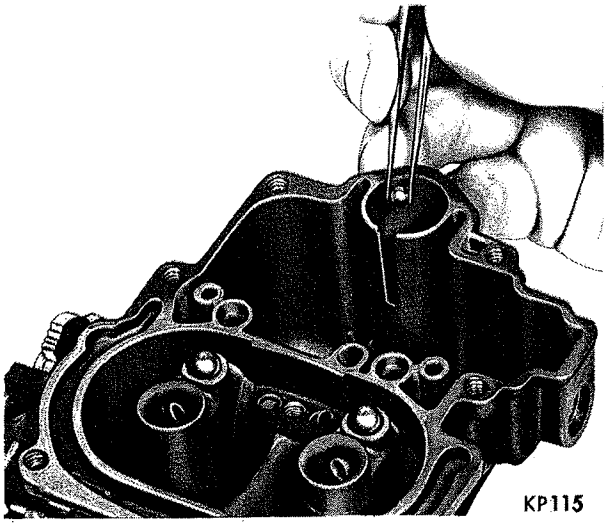


*Fig. 10—Installing Accelerator Pump Check Ball*

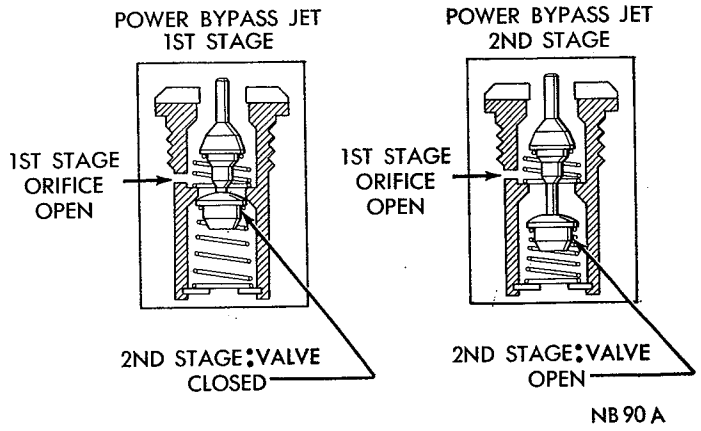


*Fig. 12—Power By-Pass Jet (1st and 2nd Stage Operation)*

When the demand for power is satisfied and the throttle opening is decreased, the manifold vacuum builds up to raise the power piston and closes the 2nd stage valve (lower) cutting off the supply of fuel through the bottom hole of the jet. A further reduction of power closes the 1st stage valve (upper) cutting off the supply of fuel through the upper hole.

No changes in service procedures are required except to be sure the Power By-Pass Jet is clean.

(6) Install accelerator pump inlet check ball (3/16 inch diameter) in check ball seat at the bottom of pump cylinder, as shown in (Fig. 10).

(7) Install accelerator pump discharge check ball (⅛ inch diameter) in orifice in the center passage of discharge strut section of main body, as shown in (Fig. 11).

### Accelerator Pump Test

(1) Pour clean gasoline into carburetor bowl, approximately ½ inch deep. Remove accelerator pump plunger from jar of gasoline and slide down into pump cylinder. Raise plunger and press lightly on plunger shaft to expel air from the pump passage.

(2) Using a small clean brass rod, hold discharge check ball firmly down on its seat. Again raise the plunger and press downward. No fuel should be emitted from either the intake or discharge passage, as shown in (Fig. 13).

(3) If any fuel does emit from either the intake or discharge passages, it indicates the presence of dirt or an imperfect check ball seat. The passage should be recleaned and then thoroughly blown out with compressed air. Examine the check ball seat for signs of damage that would not allow the ball to seat properly.

(4) Reinstall check ball and test again. If still leaking, place a piece of drill rod down on ball and rap sharply with hammer. Remove the old check ball and install new ball. Then retest. (This operation forms a new ball seat in the carburetor casting.)

(5) Install discharge cluster gasket, cluster and screw. Tighten securely. See (Fig. 4).

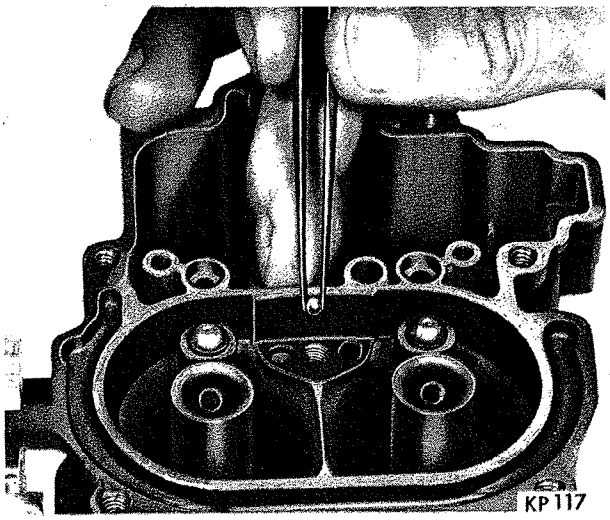


*Fig. 11—Installing Discharge Check Ball*

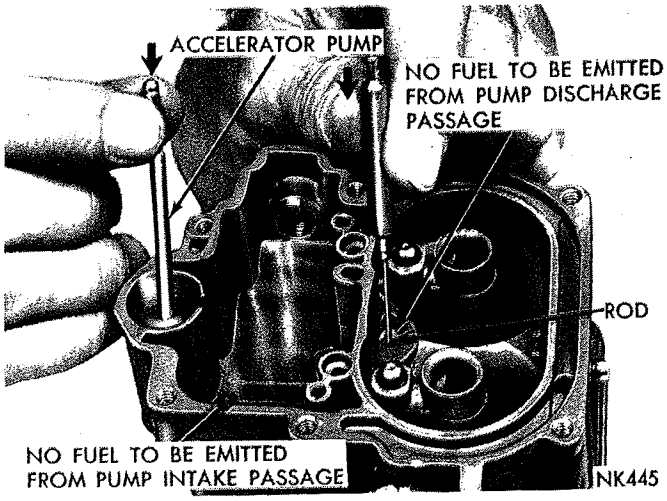


*Fig. 13—Testing Accelerator Pump Intake and Discharge Check Balls*

MyMopar.com

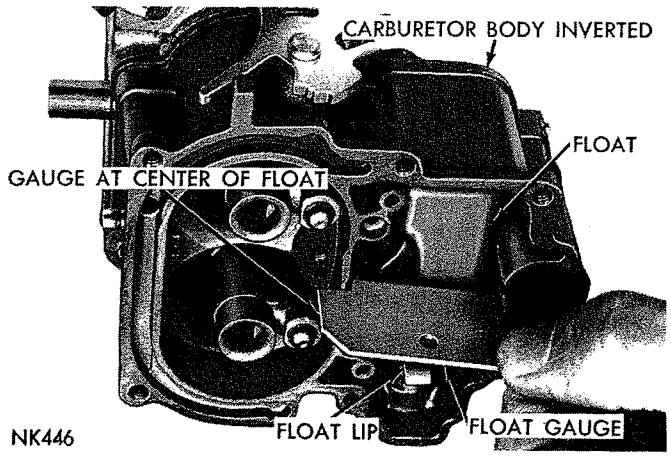


*Fig. 14—Checking the Float Setting*

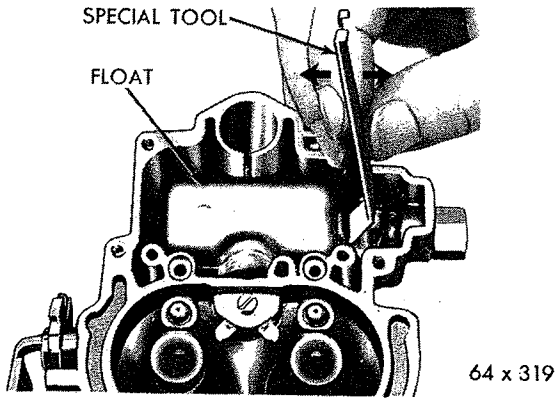


*Fig. 15—Bending Float Lip*

Again depress the accelerator pump plunger. A clear straight stream should emit from each cluster jet. If the streams are not identical (if either one is diverted or restricted), a new discharge cluster should be installed.

After test, pour the gasoline from the carburetor bowl and remove the accelerator pump plunger.

(6) Check float for leaks or damage. If satisfactory for further service, install in position in the carburetor bowl.

(7) Assemble fuel inlet needle valve, seat and gasket, then insert in position in main body. Tighten securely. (If needle is ridged or badly worn, install a new needle valve and seat assembly.)

(8) Install float fulcrum pin retaining spring in position and force under lip of boss to keep fulcrum pin in position.

### Checking Float Height

The carburetors are equipped with a synthetic rubber tipped fuel inlet needle. The needle tip is a rubber material which is not affected by gasoline and is stable over a wide range of temperatures. The tip is flexible enough to make a good seal on the needle seat, and to give increased resistance to flooding.

The use of the new inlet needle requires a new procedure in adjusting the float setting. Care should be taken to perform this operation accurately in order to secure the best performance and fuel economy.

To correctly set the float height when the carburetor is being overhauled proceed as follows:

(1) Install float with the fulcrum pin and retaining spring in main body.

(2) Install needle, seat and gasket in the body and tighten securely.

(3) Invert main body so that weight of the float **only** is forcing needle against the seat.

(4) Using Tool 73725 or a "T" scale, check float, as shown in (Fig. 14). There should be 7/32 inch from surface of fuel bowl (gasket removed) to the top of the float at center.

If an adjustment is necessary, hold the float on the bottom of the bowl, then bend the float lip toward or away from the needle, using Tool 73605. Recheck the 7/32 inch setting again then repeat the lip bending operation as required.

**CAUTION: When bending the float lip, do not allow the lip to push against the needle as the synthetic rubber tip can be compressed sufficiently to cause a false setting which will affect correct level of fuel in the bowl.** After being compressed, the tip is very slow to recover its original shape.

**It is very important that the float lip be perpendicular to the needle or slant not more than 10 degrees away from the needle when the float is set correctly.** Do not bend float lip by forcing float. Use Tool 73605, as shown in (Fig. 15).

(5) To change float setting, bend float lip toward needle to lower, and away from needle to raise the float.

Install idle tubes in the main body. See (Fig. 3). **These tubes are interchangeable.**

### Assembling Air Horn

To reassemble the air horn, refer to (Fig. 1), then proceed as follows:

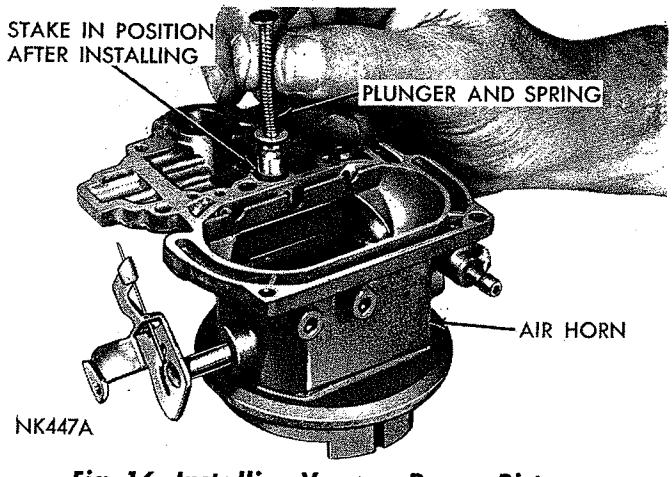


*Fig. 16—Installing Vacuum Power Piston*

MyMopar.com

(1) Remove accelerator pump plunger from jar of gasoline. If leather is hard, cracked or worn, install a new plunger and shaft.

(2) Slide compression spring over plunger shaft. Insert the assembly through air horn.

(3) Slide bowl vent valve over shaft and down against seat. Engage pump shaft with pump arm and secure with clip.

(4) Install vacuum power piston and plunger in air horn, as shown in (Fig. 16). Lock in position by prick punching on retaining rim. Compress piston plunger to be sure no binding exists. If piston sticks or binds enough to hinder smooth operation, install a new piston assembly.

(5) Slide a new air horn gasket over accelerator pump plunger, and down against air horn. Now, lower air horn straight down on main body, with the accelerator pump plunger sliding into its well. (Be sure the leather on the pump does not curl or fold back.) Install air horn retaining screws and lockwashers, then tighten securely.

(6) Install accelerator pump and fast idle connector rods, then work accelerator pump plunger several times, to be sure it operates freely.

### Choke Vacuum Diaphragm

Inspect the vacuum diaphragm fitting to insure that the passage is not plugged with foreign material. Leak check the diaphragm to determine if it has internal leaks. To do this, first depress the diaphragm stem. Then place a finger over the vacuum fitting to seal the opening. Release the diaphragm stem. If the stem moves more than 1/16 inch in 10 seconds, the leakage is excessive and the assembly must be replaced. Install the diaphragm assembly on the air horn as follows:

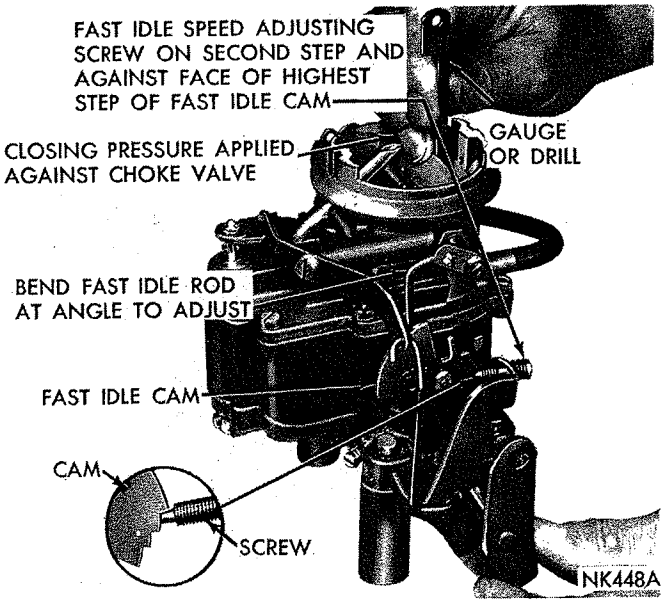


*Fig. 17—Fast Idle Cam Position Adjustment*

(1) Assemble to air horn and tighten the attaching screws securely.

(2) Install choke operating link in position between diaphragm plunger (stem) and choke lever. Install clip to secure.

(3) Inspect rubber hose for cracks before placing it on correct carburetor fitting. Refer to (Fig. 1). Do not connect the vacuum hose to diaphragm fitting until after vacuum kick adjustment has been made. (See Carburetor Adjustments.)

## CARBURETOR ADJUSTMENTS

It is very important that the following adjustments be made on a reconditioned carburetor and in the sequence listed, namely,

Cam Position Adjustment
Vacuum Kick Adjustment
Unloader Adjustment (wide open kick)
Accelerator Pump Travel Adjustment
Fast Idle Speed

### Fast Idle Speed and Cam Position Adjustment

The fast idle engine speed adjustment should be made on the vehicle, as described in the Fast Idle Speed Adjustment (On the Vehicle) Paragraph. However, the Fast Idle Cam Position Adjustment can be made on the bench. This adjustment is important to assure that the speeds of each cam step occur at the proper time during engine warm-up. Adjust as follows:

(1) With fast idle speed adjusting screw contacting step on the fast idle cam, shown in (Fig. 17), move choke valve toward the closed position with light pressure. Insert a Number 28 drill between the choke valve and wall of the air horn.

(2) An adjustment will be necessary if a slight drag is not obtained as the drill or gauge is being removed.

(3) If an adjustment is necessary, bend fast idle rod at upper angle, using Tool T109-213, until correct valve opening has been obtained. Refer to (Fig. 17).

### Vacuum Kick Adjustment—(This test can be made On or Off vehicle.)

The choke diaphragm adjustment controls the fuel delivery while the engine is running. It positions the choke valve within the air horn by action of the linkage between the choke shaft and diaphragm. The diaphragm must be energized to measure the vacuum kick adjustment. Use either a distributor test machine with a vacuum source or vacuum supplied by another vehicle. Adjust as follows:

(1) With engine **Not** running, open throttle valves far enough to allow choke valve to be moved to closed position.

(2) Disconnect vacuum hose from diaphragm and

MyMopar.com

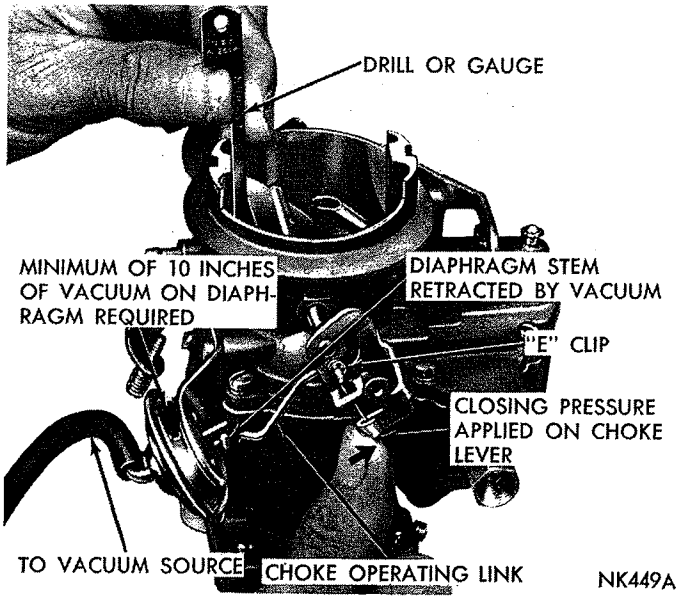


***Fig. 18—Checking the Choke Vacuum Kick Setting***

connect hose from vacuum supply as shown in (Fig. 18). (A minimum of 10 inches of mercury (HG) will be required.)

(3) Insert a G letter drill (Manual Transmissions-Standard and CAP Carburetors) or a D letter drill (Automatic Transmissions-Standard and CAP Carburetors), between the choke valve and the wall of the air horn. Refer to (Fig. 18). Apply sufficient closing pressure on the choke shaft lever to provide smallest choke valve opening possible without distortion of diaphragm link. Note that link must deflect a wire spring before it reaches the end of travel within the lever slot. The link must travel to end of the slot for proper measurement of kick adjustment.

(4) An adjustment will be necessary if a slight drag is not obtained as the drill or gauge is being removed.

The adjustment of this opening will require the removal of the choke operating link. **DAMAGE TO THE DIAPHRAGM AND THE CHOKE LEVER SLOT CAN RESULT, IF THE LINK IS NOT REMOVED FOR THE BENDING OPERATION.**

(5) Remove clip and disengage choke operating link from choke lever, then disengage link from the diaphragm stem. (The best bending results will be obtained by using a vise and a pair of pliers.)

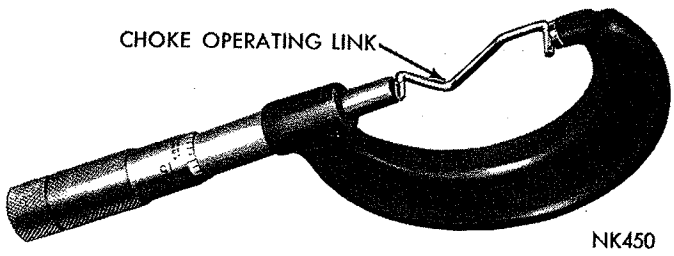


***Fig. 19—Choke Operating Link Measurement***

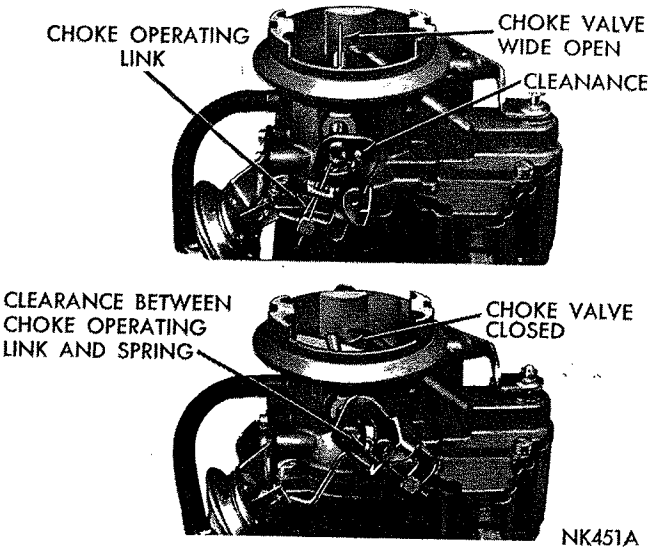


***Fig. 20—Choke Operating Link Clearances***

(6) Bend choke operating link at the angle to provide the correct choke valve opening. **CAUTION: A correction in length of the link of .010 inch, will result in a change of .020 inch in the choke valve opening.**

As an example, if choke valve opening is .020 inch in error, correction in the link length would be .010 inch.

A "2" inch micrometer will be helpful in establishing original length of the link, as shown in (Fig. 19), before completing the adjustment.

(7) Install choke operating link and recheck choke valve opening, using a drill or gauge. Refer to (Fig. 18).

Reinstall vacuum hose to diaphragm and make the following check:

(8) With no vacuum applied to diaphragm, some clearance should exist between choke operating link and choke lever slot, in both open and closed choke positions, as shown in (Fig. 20). **This clearance is necessary to allow the choke valve to close for starting as well as fully open after the engine reaches the normal operating temperature.**

If a clearance does not exist in both of these positions, a recheck of the operating link adjustment should be made.

**Free movement of the choke valve between the closed and open positions is very necessary.**

This free movement should also exist between the kick and the open choke valve positions with the engine running. If binding does exist, the choke operating link has been improperly bent and should be corrected.

### *Unloader Adjustment (Wide Open Kick)*

(1) To make unloader adjustment, lightly hold choke valve closed, then open throttle valves to wide

MyMopar.com

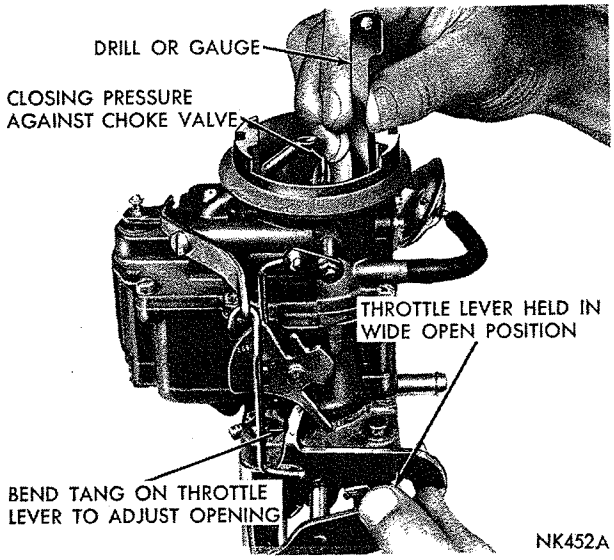


***Fig. 21—Unloader Adjustment (Wide Open Kick)***

open position. The choke valve should open sufficiently to allow a 5/16″ drill to be inserted between choke valve and wall of air horn, as shown in (Fig. 21).

(2) To adjust, bend tang on throttle lever using Tool T109-214, as shown in (Fig. 21).

(3) Hold choke open and then open and close throttle valves. Failure to obtain full throttle operation indicates improper assembly of the choke mechanism.

(4) With throttle valves held in open position, open choke valve slowly to wide open position. There should be no bind throughout entire travel of choke mechanism.

### *Accelerator Pump and Bowl Vent Adjustment*

When assembling the accelerator pump to the air horn, note that the horseshoe clip (which opens the bowl vent) can be placed in any one of the three positioning notches. These notches correspond to the long, medium and short pump stroke holes in the throttle lever. Normally, the bowl vent clip on the pump stem will be at the middle notch and the pump rod in the medium stroke hole.

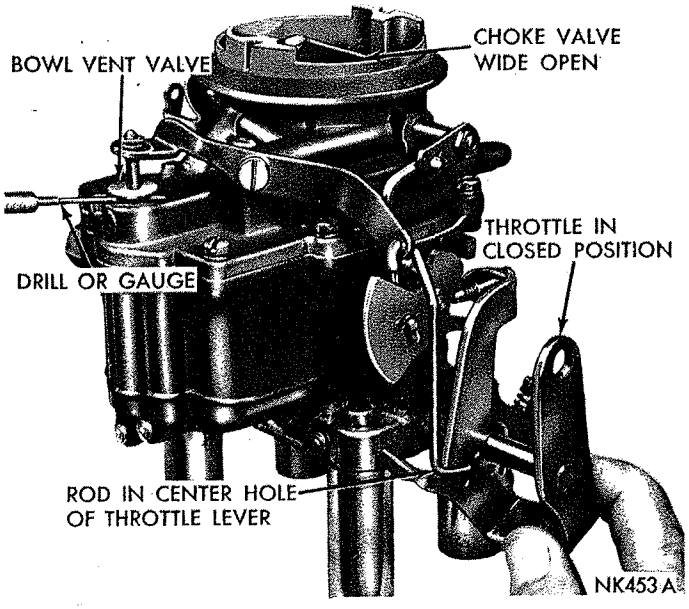


***Fig. 22—Checking Bowl Vent Valve Opening***

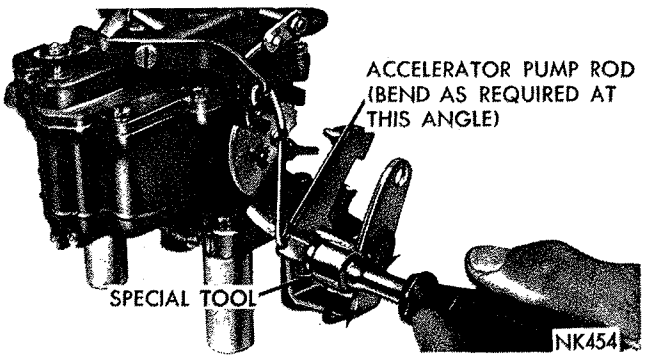


***Fig. 23—Bending Accelerator Pump Rod***

The proper procedure is to adjust the amount of bowl vent opening instead of measuring and setting the height of the pump plunger.

To check or set the adjustment, proceed as follows:

(1) Back off idle speed adjusting screw. Open choke valve, so that when throttle valves are closed, fast idle adjusting screw will not contact fast idle cam.

(2) Be sure pump rod is in medium stroke hole in throttle lever, and that bowl vent clip on the pump stem is in center notch.

(3) Close throttle valves tightly. It should be just possible to insert a .060 inch drill or gauge (Standard Carburetors) or a .050 inch drill or gauge (CAP Carburetors), between bowl vent and vent seat protruding through air horn, as shown in (Fig. 22).

If an adjustment is necessary, bend pump rod, using Tool T109-213 at lower angle, until correct bowl vent opening has been obtained, as shown in (Fig. 23).

This is an important adjustment, since too much lift at bowl vent will result in considerable loss in low speed fuel economy.

Remember that if pump rod is moved to either the short or long stroke position, a corresponding change must be made in the location of the bowl vent clip, and the amount of the lift of the bowl vent rechecked and adjusted.

**The accelerator pump travel is automatically taken care of when the bowl vent is properly adjusted.**

### *Idle Speed Adjustment (Curb Idle)*

To make the idle speed adjustment, the engine must be thoroughly warmed up. A much more reliable idle adjustment can usually be obtained if the car has been driven a minimum of five miles. For the best results, it is recommended that a tachometer be used in this adjustment. (Before making the idle speed adjustment observe the following precautions:)

MyMopar.com

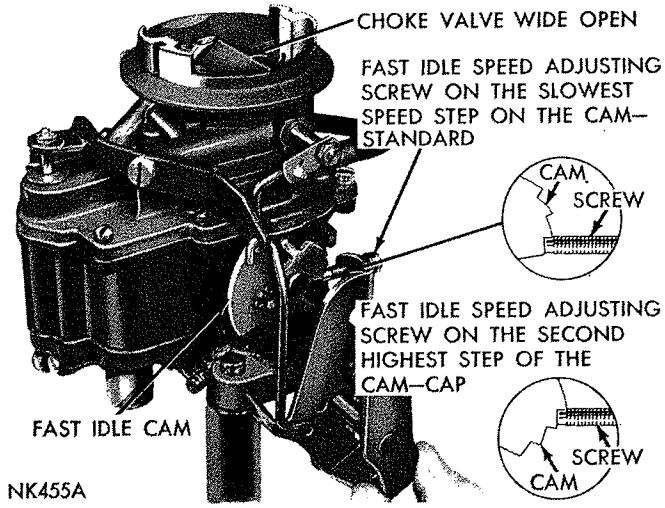


***Fig. 24—Fast Idle Speed Adjustment (on the Vehicle)***

Because the alternator can charge at idle speeds and impose a load on the engine, the headlights should be turned on (high beam). This will assure setting the idle to compensate for the alternator load. On vehicles equipped with the automatic transmission, disconnect the transmission control rod from the ball joint on the carburetor lever so that the stop in the transmission will not interfere with the free movement of the carburetor lever.

To make the idle speed adjustment, proceed as follows:

(1) Turn idle speed screw in or out to obtain 500 r.p.m. (With air conditioning **On,** set idle speed at 500 r.p.m.) Be sure choke valve is fully open and fast idle adjusting screw is not contacting fast idle cam.

(2) Turn each idle mixture screw to obtain highest r.p.m. While making adjustment, carefully watch tachometer and notice that speed can be decreased by turning screws in either direction from setting that gave highest r.p.m. reading.

(3) Readjust to 500 r.p.m. with the idler speed screw.

(4) Turn each idle mixture adjusting screw in clockwise direction (leaner) until there is a slight drop in r.p.m. Now, turn each screw out, counter-clockwise (richer) just enough to regain lost r.p.m.

This procedure will assure that the idle has been set to the leanest mixture possible for smooth idle. **This setting is very important.**

Since the correct speed was originally set using the speed screw, the speed obtained after finding the leanest smooth idle setting will probably be too fast.

(5) Readjust speed screw to obtain correct idle speed. Repeat steps 2 and 4 above if necessary.

After proper idle speed has been obtained, refer to (Fig. 3), in Throttle Linkage Section of this Group for procedure on adjusting transmission control rod.

### *Fast Idle Speed Adjustment (On the Car)**

To set fast idle speed on car, connect a tachometer to vehicle, then set curb idle speed and proceed as follows:

(1) With engine running and transmission in the neutral position, open the throttle slightly.

(2) **On Standard carburetors,** close choke valve about 20 degrees, then allow throttle to close. Return choke valve to the open position. The fast idle speed adjusting screw should contact the slowest speed step on the fast idle cam (Fig. 24).

(3) **On CAP carburetors,** open the throttle until the fast idle screw can be positioned on the second highest step of the cam (Fig. 24). **The air cleaner must be installed while measuring the engine speed.**

(4) With the engine warmed up to the normal operating temperature, turn the fast idle speed adjusting screw in or out to secure 700 rpm (Standard carburetors) or 1450 rpm (CAP manual transmission) or 1600 rpm (CAP Automatic transmission).**

*After Approx. 500 Miles (If Required).

**Before adjusting idle and/or fast idle speeds and mixtures, make sure that the basic timing and the distributor control valve are correctly adjusted as outlined under Idle Speed Adjustment (Curb Idle) CAP Carburetors.

### *Idle Speed Adjustment (Curb Idle) CAP Carburetors*

To make the idle speed adjustment on CAP carburetors secure an accurate ignition tachometer and a Sun Electric Combustion-Vacuum Unit, Model 80, Exhaust Condenser, Model EC, and Hose 669-14 or equivalent. (The above analyzer is recommended; however, other reliable makes of analyzers in good condition may be used.) Proceed as follows:

(1) Engine running at normal operating temperature, and timing checked and set at 5° at ATDC.

(2) Air Cleaner installed.

(3) Six cylinder engines only—turn headlights on high beam position.

(4) Automatic transmissions in neutral position (not in park position).

(5) On air conditioned vehicles, turn air conditioning **off.**

(6) Connect ignition tachometer.

(7) Insert probe of the exhaust gas analyzer in the tail pipe as far as possible (2 ft. minimum distance). On dual exhaust cars use the left side tail pipe (side opposite heat valve). It is very important that the probe and connecting tubing be free of leaks to prevent erroneous readings. If a garage exhaust system is used to conduct the exhaust gases away, a plenum chamber or other means must be used to reduce the vacuum of the exhaust system to ½ inch water or less.

(8) Connect the exhaust gas analyzer, warm up and calibrate according to manufacturer's instructions.

(9) Place clamp on hose between distributor vacuum control valve and intake manifold.

MyMopar.com

(10) Set the idle speed to the specified value for the specific engine-transmission combination.

**IMPORTANT: When adjusting mixture screws to obtain the air/fuel ratio specified for CAP, do not turn the mixture screw more than 1/16 turn at a time. The combustion analyzer is so sensitive that the ratio must be changed by very small increments if accurate readings are to be obtained. The meters read in air/fuel ratio so that a higher reading indicates a leaner mixture and vice versa.**

(a) Adjust each screw 1/16 turn richer (counterclockwise) and wait 10 seconds before reading the meter.

(b) If necessary, repeat step "a" until the meter indicates a definite increase in richness (lower reading). This step is very important since the meter reverses its readings and indicates a richer mixture as the carburetor is leaned out if the carburetor is set very lean.

(c) When it has been established that the meter is indicating a lower reading (richer mixture) when the idle mixture screws are turned in the richer direction, proceed to adjust the carburetor to give 14.2 air/ fuel ratio, turning the screws counterclockwise (richer) to lower the meter reading and clockwise (leaner) to increase the meter reading.

(d) If the idle speed changes as the mixture screws are turned, adjust the speed to the specified value and readjust the mixture as required so that 14.2 air/fuel ratio is obtained at the specified idle speed.

(e) If the idle is rough, the screws may be adjusted independently to achieve a smooth idle, provided the air/fuel ratio is held to the 14.2 value.

(11) Remove clamp from distributor vacuum valve hose. If idle speed changes materially check and set valve as described under "Distributor Vacuum Control Valve Adjustment."

# BBD SERIES CARBURETORS

## INDEX


| | Page |
|---|---|
| Automatic Choke | 2 |
| Carburetor Adjustments | 46 |
| Accelerator Pump and Bowl Vent | 46 |
| Choke Unloader (wide open kick) | 48 |
| Fast Idle Adjustment | 49 |
| Fast Idle Speed Adjustment (on the car) | 46 |
| Idle Speed Adjustment | 48 |
| Cleaning Carburetor Parts | 1 |
| Disassembling the Carburetor | 42 |
| Inspection and Reassembly | 44 |
| Servicing the Carburetor | 1 |
| Specifications | 89 |
| Closed Crankcase Vent System | 2 |


## GENERAL INFORMATION

**The Standard Ball and Ball** carburetor models BBD-4125S and BBD-4127S are used on the 361/383 cu. in. engine when the vehicles are equipped with a manual or automatic transmission respectively.

**The Special (CAP-Cleaner Air Package) Ball and Ball** carburetor models BBD-4126S and BBD-4128S are used on the 361/383 cu. in. engine when the vehicles are equipped with a manual or automatic transmission respectively. These carburetors are identified by a green tag attached to the air horn mounting screw.

The dash pot (used on manual transmission equipped vehicles only) is mounted on the carburetor and retards the return of the throttle to idle position. **The proper adjustment of the dash pot is very Important!** (See Carburetor Adjustments.)

Since the service procedures are identical on all BBD carburetors, the illustrations showning the various disassembly procedures will not always show any one specific carburetor.

The Ball and Ball carburetor is of the dual downdraft type. Each throat has its own throttle valve, idle and main metering systems and are supplemented by the float, accelerating and power systems.

On each BBD series carburetor, the model number is stamped on metal tag attached to air horn. Do not remove or destroy this tag, as it is the only means provided for carburetor model identification. Before attempting to repair or overhaul carburetor, refer to model number and secure a repair kit for number indicated on tag.

# SERVICE PROCEDURES

## DISASSEMBLING THE CARBURETOR

To disassemble the carburetor for cleaning or overhauling, refer to (Fig. 1), then proceed as follows:

(1) Insert three Tool T-109-287S and one Tool T109-288S elevating legs through carburetor throttle body stud holes. (These tools are used to protect throttle valves from damage and to provide a suitable base for working.)

(2) Remove hairpin clip and disengage fast idle connector rod from the throttle and fast idle levers.

(3) Remove hairpin clip and disengage accelerator rod from throttle lever and pump rocker arm.

MyMopar.com

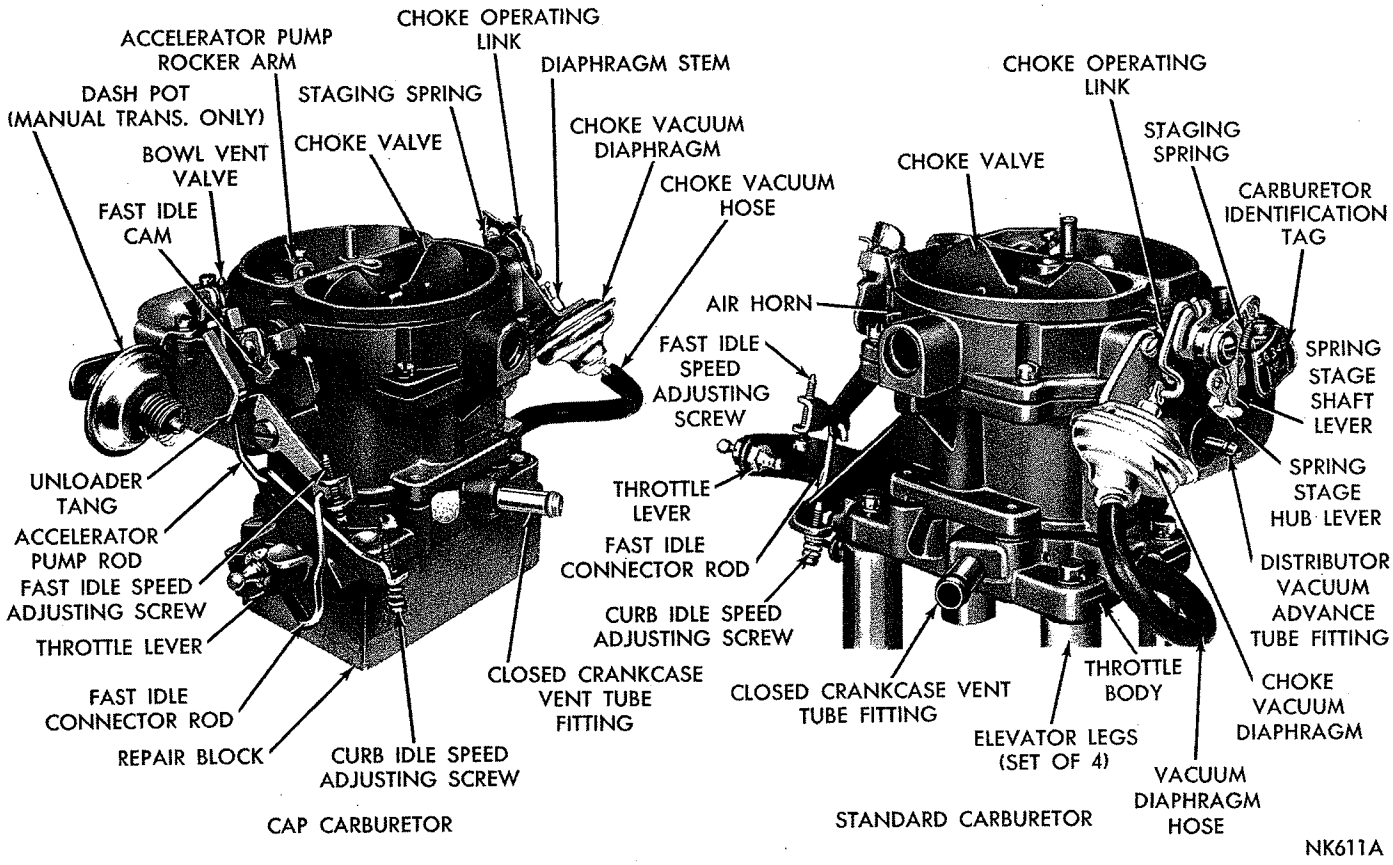


***Fig. 1—Carburetor Assembly (Standard) BBD-4125S and (CAP—Cleaner Air Package) BBD-4126S***

(4) Remove vacuum hose between the carburetor throttle body fitting and vacuum diaphragm.

(5) Remove clip from choke operating link and disengage link from diaphragm plunger and choke lever. Refer to (Fig. 1).

(6) Remove vacuum diaphragm and bracket assembly and place to one side, to be cleaned as a special item. **A liquid cleaner may damage the diaphragm material.**

(7) Remove air horn retaining screws and lift air horn straight up and away from main body. Discard gasket (2 screws recessed). Remove dash pot (if so equipped.)

(8) Disengage accelerator pump plunger from accelerator pump arm by pushing up on bottom of plunger and sliding plunger shaft off hook. Slide plunger out of air horn and remove the compression spring and seat.

If old plunger can be used again or if a new plunger is to be installed, place plunger in a jar of clean gasoline or kerosene to prevent leather from drying out.

(9) Remove fuel inlet needle valve, seat and gasket from main body.

(10) Lift out float fulcrum pin retainer, and lift out floats and fulcrum pin.

(11) Remove step-up piston and retaining screw and slide step-up piston and rods out of well, as shown in (Fig. 2). Lift out step-up piston spring. Remove the step-up piston gasket from bottom of well.

(12) Remove main metering jets (Fig. 3).

(13) Remove venturi cluster screws, then lift venturi cluster and gaskets up and away from main

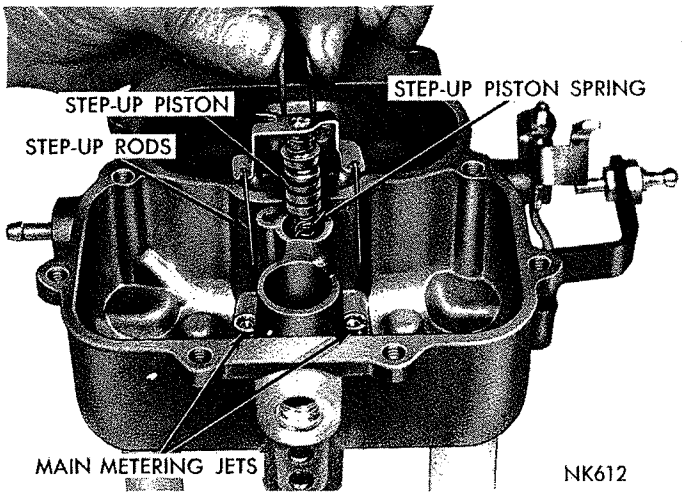


***Fig. 2—Removing or Installing the Step-Up Piston***

MyMopar.com

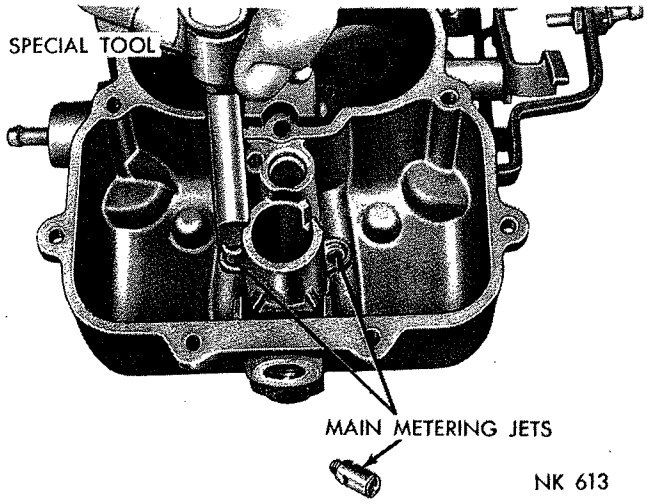


*Fig. 3—Removing or Installing the Main Metering Jets*

body, as shown in (Fig. 4). Discard gaskets. **Do not remove idle orifice tubes or main vent tubes from cluster.** They can be cleaned in a solvent and dried with compressed air.

(14) Invert carburetor and drop out accelerator pump discharge check ball and intake check ball. (The intake check ball is the largest.)

(15) Remove screws that attach throttle body to main body. Separate the bodies and discard gasket.

The carburetor now has been disassembled into three sub-assemblies, the air horn, main body and throttle body and the components of each disassembled as far as necessary for cleaning and inspection.

It is usually not advisable to remove the throttle shaft or valves from the throttle body, unless wear or damage necessitates the installation of new parts.

There is about .005 inch clearance between the

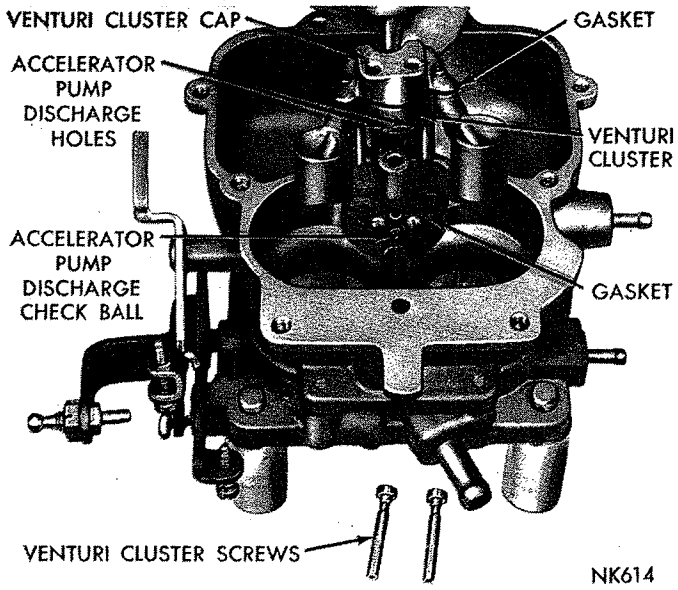


*Fig. 4—Removing or Installing the Venturi Cluster*

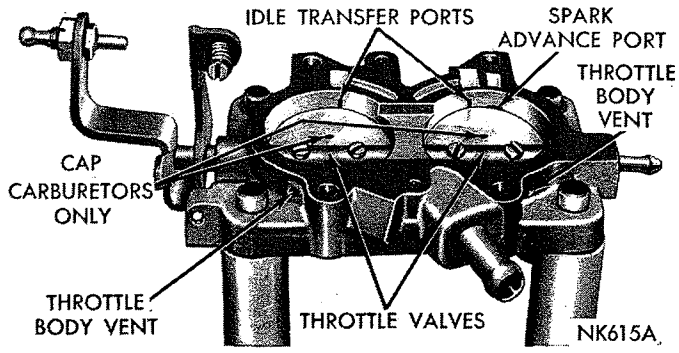


*Fig. 5—Ports in Relation to Throttle Valves*

throttle shaft and the throttle shaft bores in the throttle body. Any clearance over .010 inch, a new throttle shaft and/or throttle body should be installed.

## INSPECTION AND REASSEMBLY

### *Throttle Body*

(1) Inspect the throttle shaft and throttle body for excessive wear. If either or both are worn to the point where the carburetor operation will be affected, replace as required.

During manufacture, the location of the idle transfer port and the spark advance control ports to the throttle valve, is carefully established for one particular assembly, refer to (Fig. 5).

If a new shaft should be installed in an old, worn throttle body, it would be very unlikely that the original relationship of the ports to the valves would be obtained. Changing the relationship of the valves to the ports would adversely affect normal car operation between the speeds of 15 and 30 miles per hour. If it has been determined, however, that a new shaft or valves is to be installed, adhere to the following instructions:

(2) Mark position of the throttle valves in bores. Be sure idle speed screw is backed off.

(3) Remove screws that hold throttle valves to shaft and slide valves out of the bores. **These screws are staked on the opposite side and care should be used at removal so as not to break off in the shaft.**

Remove the staked end of the screws with a file.

(4) Slide throttle shaft and lever out of body.

(5) Install new throttle shaft and lever.

(6) Install throttle valves in their respective bores (with valve numbers toward manifold). Install new screws but do not tighten. Hold valves in place, with fingers pressing on high sides of valves. Tap valves lightly with a screwdriver to seat in throttle bores. Tighten screws securely and stake by squeezing with pliers.

(7) Turn the idle mixture adjusting screws **lightly** against their seats with the fingers. Back off one full turn for approximate adjustment. **DO NOT USE A SCREWDRIVER.**

MyMopar.com

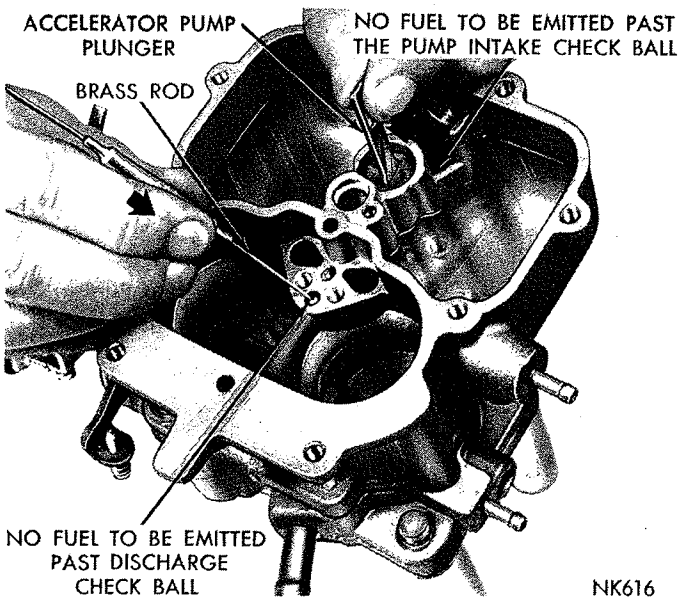


***Fig. 6—Testing the Accelerator Pump Intake and Discharge Check Balls***

**On CAP carburetors, do not remove the idle mixture adjusting screws from the throttle body. These screws have limited travel and will be broken if removed.**

### *Main Body*

(1) Invert main body and place a new gasket in position and place throttle body on the main body and align. Install screws and tighten securely.

(2) Install accelerator pump discharge check ball in discharge passage and check accelerator pump system; fuel inlet and discharge check balls as follows:

(3) Pour clean gasoline into carburetor bowl, approximately ½ inch deep. Remove pump plunger from jar of gasoline, flex leather several times, then slide down into the pump cylinder. Raise plunger and press lightly on plunger shaft to expel all air from the pump passage.

(4) Using a small clean brass rod, hold discharge check ball down firmly on its seat. Again raise plunger and press downward. No fuel should be emitted from either the intake or discharge passage, as shown in (Fig. 6).

If any fuel does emit from either passage, it indicates the presence of dirt or a damaged check ball seat. Check the passage again and repeat test. If leakage is still evident, install a new check ball. The fuel inlet check ball is located at the bottom of the plunger well.

(5) Install new gaskets on venturi cluster, and install in position in main body. Install cluster screws and tighten securely. Test pump discharge by pressing pump plunger down. Two fine streams of fuel should be forced from cluster. If either stream is restricted or diverted, remove cluster and reclean. After test, pour the fuel from the bowl and remove pump plunger.

(6) Install the main metering jets. Tighten securely. (Refer to Fig. 3.)

(7) Before installing step-up piston, be sure step-up rods are able to move freely, each side of the vertical position, as shown in (Fig. 7). The step-up rods must be straight, smooth and free to move forward and backward from vertical.

(8) Slide step-up piston gasket down into position in the piston well, then install the step-up piston spring, step-up piston and rods. Carefully guide the step-up rods into the main metering jets. (Fig. 2.) Install the retaining screw and tighten securely. Check piston for free operation in the well.

A step-up piston stuck in the **Up** position will cause a rich mixture at part throttle, whereas a piston stuck in the **Down** position will cause a lean mixture at wide open throttle and poor acceleration.

### *Measuring Float Setting*

The carburetors are equipped with a rubber-tipped fuel inlet needle. The rubber tip is flexible enough to make a good seal on the needle seat, and to give increased resistance to flooding.

The use of the rubber-tipped needle requires a new procedure in adjusting the float setting. Care should

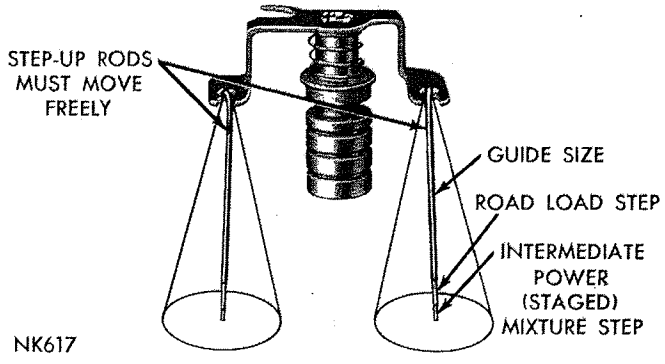


***Fig. 7—Step-Up Rods Free Play***

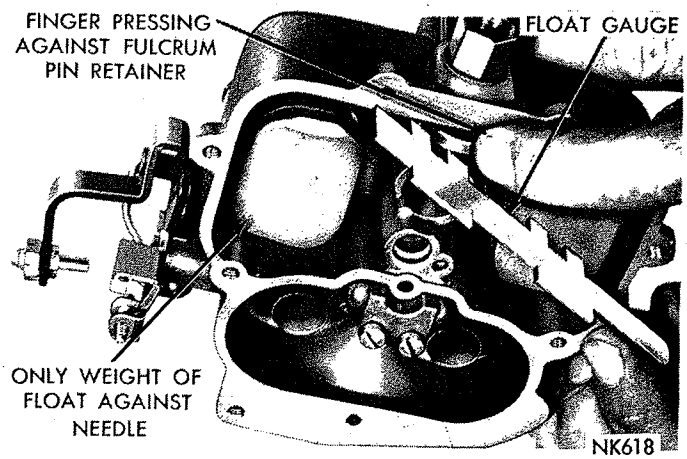


***Fig. 8—Checking the Float Setting***

MyMopar.com

be taken to perform this operation accurately in order to secure the best performance and fuel economy.

(1) To correctly set float height when the carburetor is being overhauled, install the floats with fulcrum pin and pin retainer in main body.

(2) Install rubber-tipped needle, seat and gasket in the body and tighten securely.

(3) Invert main body so that weight of the float only is forcing needle against seat. Hold finger against retainer to fully seat fulcrum pin.

(4) Using Tool T109-280 or a "T" scale, measure float, as shown in (Fig. 8). There should be 5/16 inch from surface of fuel bowl to crown of each float at the center.

If an adjustment is necessary, hold the floats on bottom of the bowl and bend float lip toward or away from needle. Recheck the 5/16 inch setting again and repeat the lip bending operation as required.

**CAUTION: When bending the float lip, do not allow the lip to push against the needle as the synthetic rubber tip can be compressed sufficiently to cause a false setting which will affect correct level of fuel in the bowl.**

After being compressed, the tip is very slow to recover its original shape.

**CAUTION: It is very important that the float lip be perpendicular to the needle or slanted nor more than ten degrees away from the needle when the float height is correct.**

### *Air Horn*

(1) Test freeness of the choke mechanism in air horn. The choke shaft must float free to operate correctly. If choke shaft sticks in bearing areas, or appears to be gummed from deposits in air horn, a thorough cleaning will be required.

(2) Remove accelerator pump plunger from gasoline, slide compression spring and spring seat over shaft. Install assembly in air horn and engage with accelerator pump arm.

(3) Place a new gasket on main body, and install air horn. Install attaching screws and tighten securely. (When installing air horn, be sure leather on the plunger does not wrinkle or fold back.)

(4) Engage accelerator pump rod with pump rocker arm and install loose end in center hole of throttle lever. Install hairpin clip to secure. (Fig. 1.)

(5) Engage fast idle connector rod in fast idle lever and throttle lever. Install hairpin clip to secure.

### *Choke Vacuum Diaphragm*

Inspect the diaphragm vacuum fitting to be sure that the passage is not plugged with foreign material. Leak check the diaphragm to determine if it has internal leaks. To do this, first depress the diaphragm stem, then place a finger over the fitting to seal the opening. Release the stem. If the stem moves more than 1/16 inch in ten (10) seconds, the leakage is excessive and the assembly must be replaced.

Install the diaphragm assembly on the airhorn as follows:

(1) Assemble diaphragm to airhorn and tighten the attaching screws securely.

(2) Install choke operating link in position between diaphragm plunger (stem) and the choke lever. Install clip to secure.

(3) Inspect rubber hose for cracks before placing it on correct carburetor fitting. Refer to (Fig. 1). Do not connect vacuum hose to diaphragm fitting until after vacuum kick adjustment has been made. (See Carburetor Adjustments.)

## CARBURETOR ADJUSTMENTS

It is very important that the following adjustments are made on a reconditioned carburetor and in the sequence listed:

### *Accelerator Pump*

(1) Back off idle speed adjusting screw. Open choke valve so that fast idle cam allows throttle valves to be completely seated in bores. Be sure that pump connector rod is installed in center hole of the throttle lever.

(2) Close throttle valves tightly. Measure the distance between top of air horn and end of plunger shaft, as shown in (Fig. 9). This measurement should be 1" + or — 1/64 inch.

(3) To adjust pump travel, bend pump connector rod using Tool T109-213, at the lower angle of rod, until correct setting has been obtained.

### *Fast Idle Speed and Cam Position Adjustment*

The fast idle engine speed adjustment should be made on the vehicle, as described in the Fast Idle

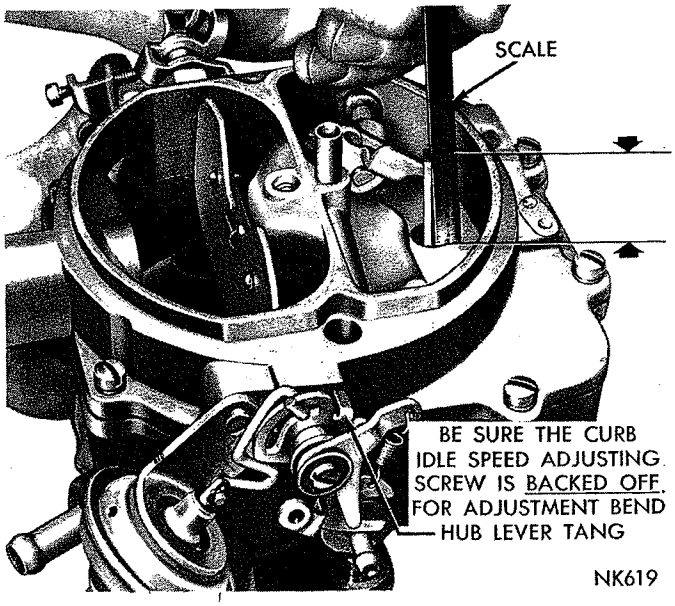


***Fig. 9—Checking the Accelerator Pump Setting***

MyMopar.com

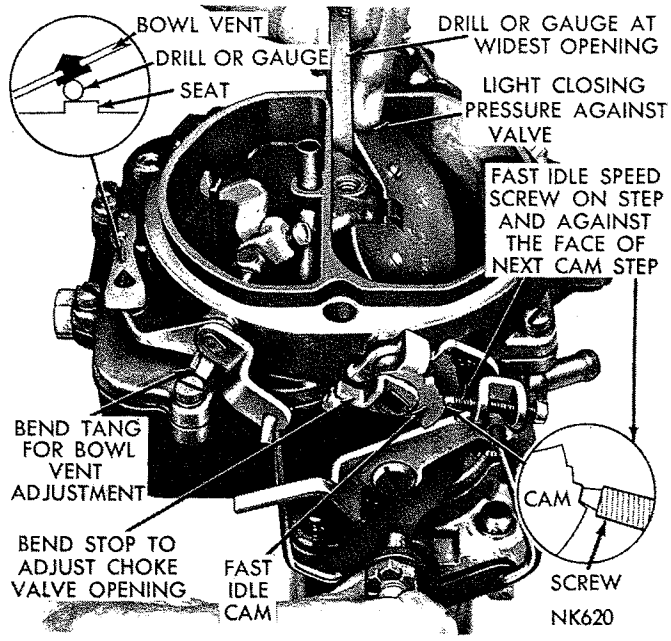


***Fig. 10—Fast Idle Cam Position Adjustment***

Speed Adjustment (On the Vehicle) Paragraph. However, the Fast Idle Cam Position Adjustment can be made on the bench. This adjustment is important to assure that the speeds of each step of the cam occur at the proper time during engine warm-up.

(1) With fast idle speed adjusting screw contacting step on fast idle cam shown in (Fig. 10), move choke valve toward closed position with light pressure. Insert a Number 30 drill between choke valve and wall of the air horn.

(2) An adjustment will be necessary if a slight drag is not obtained as the drill or gauge is being removed.

(3) If an adjustment is necessary, bend stop on choke shaft, using Tool T109-22 until correct valve opening has been obtained. Refer to (Fig. 10).

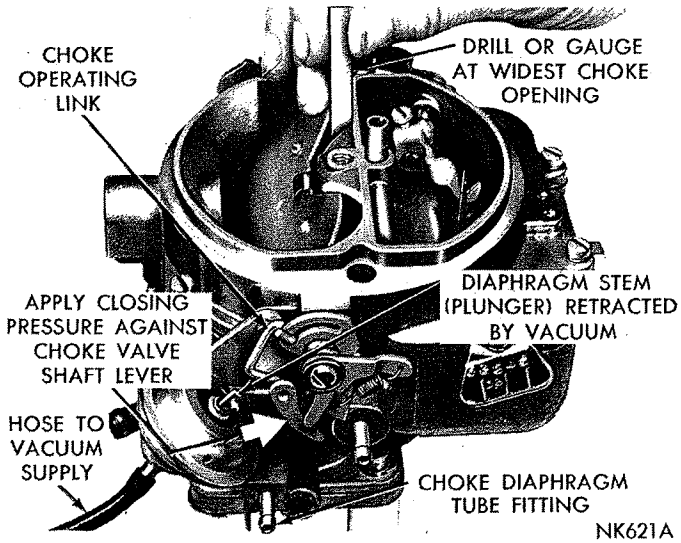


***Fig. 11—Checking the Choke Vacuum Kick Setting***

**Vacuum Kick Adjustment**—This test can be made **ON** or **OFF** the vehicle.

The choke diaphragm adjustment controls the fuel delivery while the engine is running. It positions the choke valve within the airhorn by action of the linkage between the choke shaft and the diaphragm. The diaphragm must be energized to measure the vacuum kick adjustment. Use either a distributor test machine with a vacuum source, or vacuum supplied by another vehicle.

(1) With engine **Not** running, open throttle valves far enough to allow choke valve to be moved to closed position.

(2) Disconnect vacuum hose from diaphragm and connect hose from vacuum supply, as shown in (Fig. 11). (A minimum of 10 inches of mercury (HG) will be required.)

(3) Insert a Number 15 drill (Manual Transmission CAP and Standard carburetors) or a Number 26 drill (Automatic Transmission, CAP and Standard carburetors), between the choke valve and wall of the airhorn. Refer to (Fig. 11). Apply sufficient closing pressure on choke shaft lever to provide smallest choke valve opening possible without distortion of the diaphragm link. Note that the cylindrical stem of diaphragm will extend as an internal spring is compressed. This spring must be fully compressed for proper measurement of the vacuum kick adjustment.

(4) An adjustment will be necessary if a slight drag is not obtained as the drill or gauge is being removed.

The adjustment of this opening will require the removal of choke operating link.

**CAUTION: Damage to the diaphragm and the choke lever slot can result, if the link is not removed for the bending operation.**

(5) Remove clip and disengage choke operating link from diaphragm stem (plunger), then disengage link from choke lever. (The best bending results will be obtained by using a vise and a pair of pliers.)

(6) Bend choke operating link to provide the correct choke valve opening.

**CAUTION: A correction in the length of the link of .010 inch, will result in a change of .010 inch in the choke valve opening.**

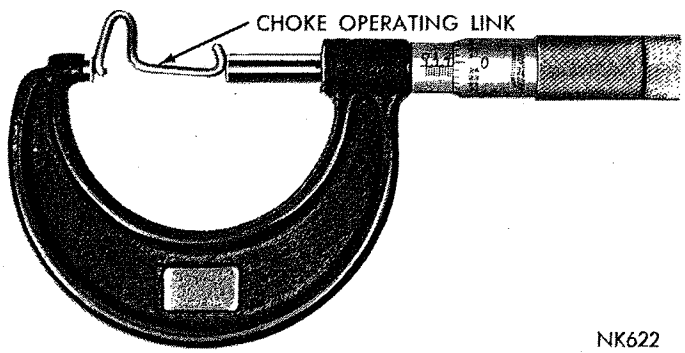


***Fig. 12—Choke Operating Link Measurements***

MyMopar.com

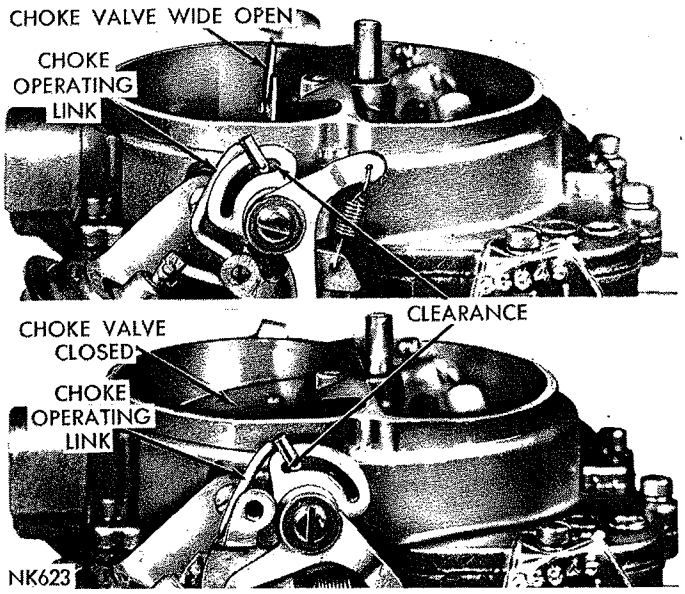


***Fig. 13—Choke Operating Link Clearances***

As an example, if choke valve opening is .010 inch in error, correction in link length would be .010 inch.

A 2″ micrometer will be helpful in establishing original length of link, as shown in (Fig. 12), before completing adjustment.

(7) Install choke operating link and recheck choke valve opening, using a gauge or drill. (Refer to Fig. 11.)

Reinstall vacuum hose to diaphragm and make following check:

(8) With no vacuum applied to diaphragm, some clearance should exist between choke operating link and choke lever slot, in both the open and closed choke valve positions, as shown in (Fig. 13).

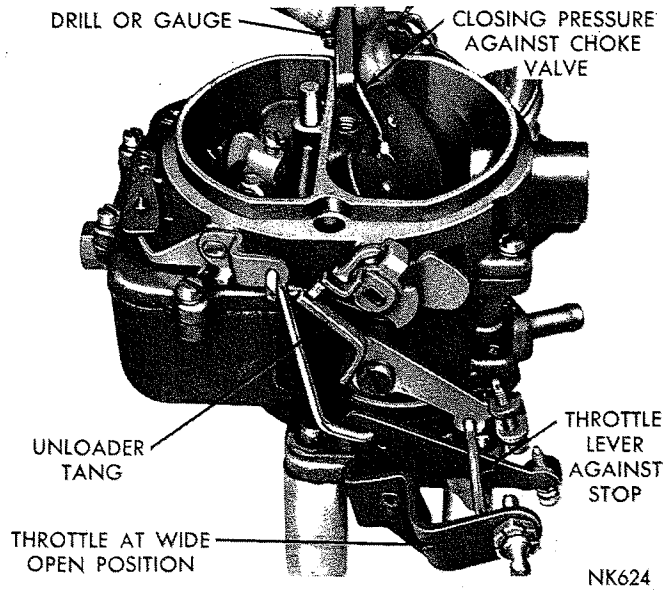


***Fig. 14—Checking the Choke Unloader Setting***

**This clearance is necessary to allow the choke valve to close for starting as well as fully open position after the engine reaches the normal operating temperature.**

If a clearance does not exist in both of these positions, a recheck of the operating link adjustment should be made. **Free movement of the choke valve between the closed and open positions is very necessary.**

This free movement should also exist between the kick and the open choke valve positions with the engine running. If binding does exist, the choke operating link has been improperly bent and should be corrected.

### *Choke Unloader (Wide Open Kick)*

(1) Hold throttle valves in wide open position. Insert Tool T109-31 (or a ¼″ drill shank) between upper edge of choke valve and inner wall of air horn, as shown in (Fig. 14).

(2) With a finger lightly pressing against valve, a slight drag should be felt as gauge is being withdrawn. If an adjustment is necessary, bend tang on fast idle lever, using Tool T109-22, as shown in (Fig. 15) until correct clearance has been obtained.

### *Bowl Vent Adjustment*

(1) With throttle valves at curb idle, there should be 1/16 inch clearance between bowl vent valve and air horn, when measured at innermost or smallest dimension with a drill shank.

(2) If an adjustment is necessary, bend short tang on vent valve operating lever, using Tool T109-22 until correct opening has been obtained. **Any adjustment to the accelerator pump means, that the bowl vent valve must be readjusted.**

### *Idle Speed Adjustment (Curb Idle) Standard Carburetors*

To make the idle speed adjustment, the engine must be thoroughly warmed up. A more reliable idle adjustment can usually be obtained if the car has been driven a minimum of five miles. For best results, it is recommended that a tachometer be used in this adjustment.

The following precautions should be taken before making the idle speed adjustment:

(1) To make idle speed adjustment, turn the idle speed screw in or out to obtain 500 rpm. (On cars with air conditioning, set the idle speed at 500 rpm with **air conditioning On.**) Be sure choke valve is fully open and that fast idle adjusting screw is not contacting fast idle cam.

(2) Turn each idle mixture screw **in** or **out** to obtain highest rpm. While making adjustment, carefully watch tachometer and notice that speed can be decreased by turning screws in either direction from setting that gave highest rpm reading.

(3) Readjust to 500 rpm with idle speed screw. (With air conditioning ON.)

MyMopar.com

(4) Turn each idle mixture adjusting screw in clockwise direction (leaner) until there is a slight drop in rpm. Turn each screw out, counterclockwise (richer) just enough to regain lost rpm.

This procedure will assure that idle has been set to leanest mixture possible for smooth idle. **This setting is very important.**

Since correct speed was originally set, using speed screw, speed obtained after finding leanest smooth idle will probably be too fast.

(5) Readjust speed screw to obtain correct idle speed. Repeat steps 2 and 4 above if necessary.

### *Measuring Float Setting (On the Vehicle)*

To measure the float setting with the carburetor mounted on the engine, proceed as follows:

(1) Remove hairpin clip and disengage accelerator pump rod from throttle lever and pump rocker arm. Disconnect automatic choke rod by unsnapping clip.

(2) Remove the air horn attaching screws and lift the air horn straight up and away from the main body. Remove the gasket.

(3) Set float fulcrum pin by pressing a finger against fulcrum pin retainer.

There should be enough fuel in the bowl to raise floats so that the lip bears firmly against needle. Additional fuel may be admitted by slightly depressing float. If fuel pressure in the line is insufficient to force additional fuel into bowl, add necessary fuel from a clean container.

**WARNING: Since the manifolds may be hot, it is dangerous to spill fuel onto these surfaces. Take the necessary precautions to avoid spillage.**

(4) With only pressure from buoyant float holding lip against inlet needle, check float setting, using Tool T109-280, or a "T" scale. There should be 5/16 inch from surface of bowl (gasket removed) to crown of the floats at the center.

If an adjustment is necessary, hold the floats on the bottom of the bowl, then bend the float lip toward or away from the needle. Recheck the 5/16 inch setting again, then repeat the lip bending operation as required. **When bending the float lip, do not allow the lip to push against the needle as the rubber tip can be compressed sufficiently to cause a false setting which will affect correct level of fuel in the bowl. After being compressed, the rubber tip is very slow to recover its original shape. It is very important that the float lip be perpendicular to the needle or slanted not more than 10 degrees away from the needle when the float is set correctly.**

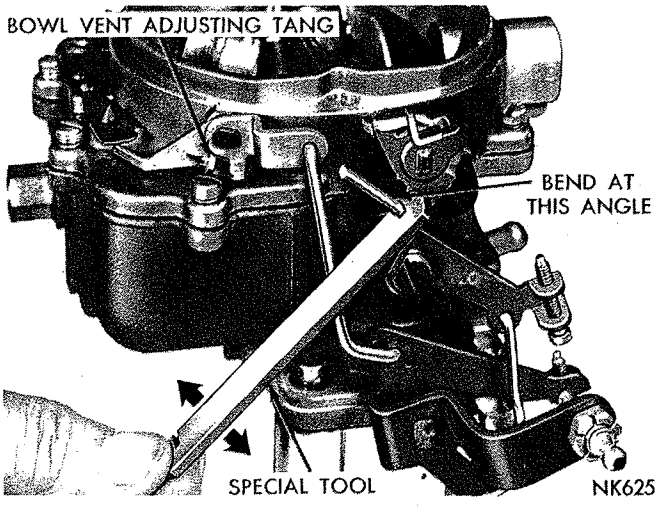


*Fig. 15—Bending the Choke Unloader Tang*

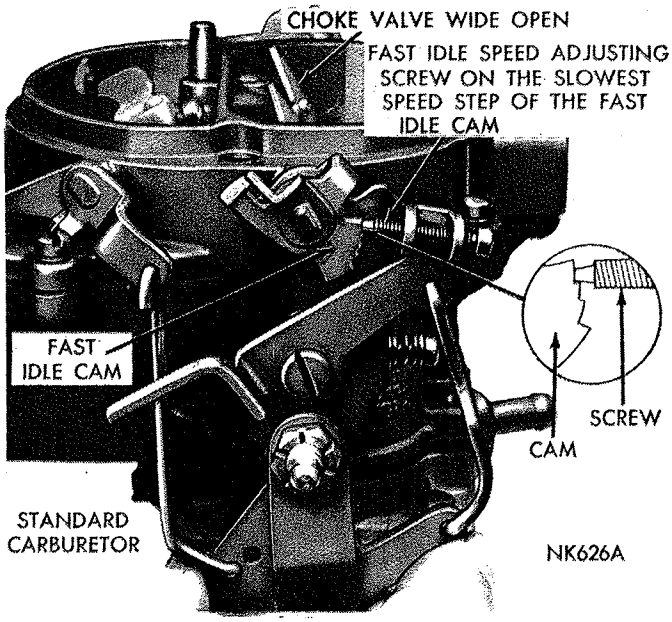


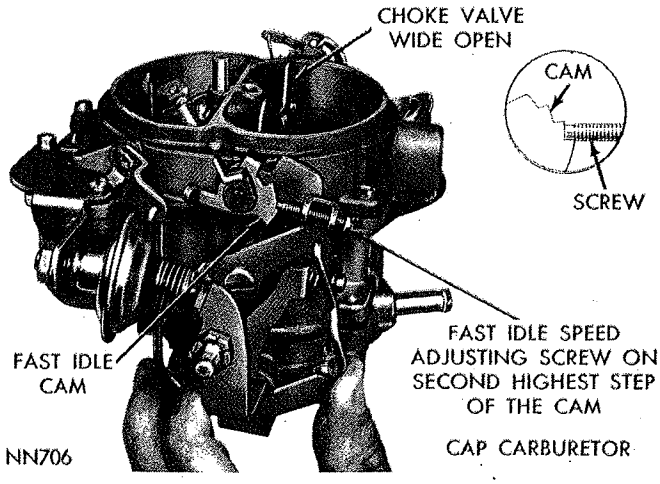


*Fig. 16—Fast Idle Speed Adjustment (on the Vehicle)*

(5) After float has been correctly set, reassemble the air horn.

### *Fast Idle Speed Adjustment (On the Vehicle)**

To set the fast idle speed on the vehicle, connect a tachometer to the vehicle, then set the curb idle speed and proceed as follows:

MyMopar.com

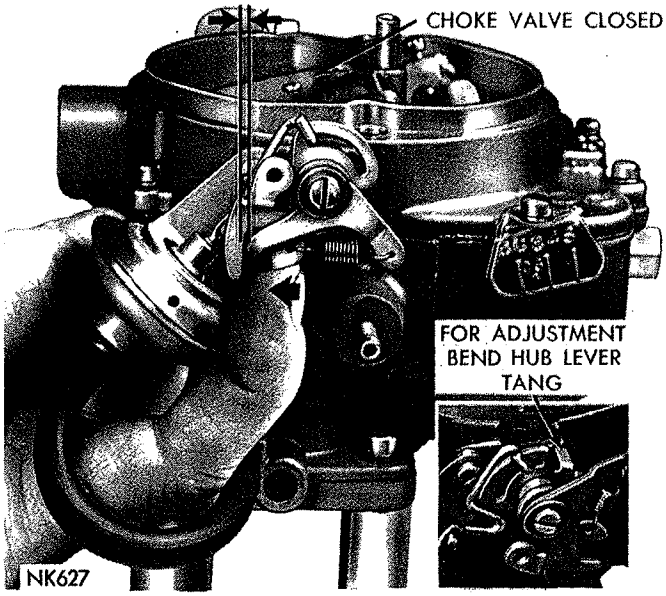


*Fig. 17—Spring Staged Choke Adjustment*

(1) With engine running and transmission in neutral position, open throttle slightly.

(2) **On Standard carburetors,** close the choke valve about 20 degrees, then allow the throttle to close. Return choke valve to the open position. The fast idle speed screw should contact the slowest speed step on the fast idle cam (Fig. 16).

(3) **On CAP carburetors,** open the throttle until the fast idle screw can be positioned on the second highest step of the cam (Fig. 16). **The air cleaner must be installed while measuring the engine speed.**

(4) With the engine warmed up to the normal operating temperature, turn the fast idle speed screw **in** or **out** to secure 700 rpm (Standard carburetors) or 1600 rpm (CAP carburetors Manual Transmission) or 1400 rpm (CAP Carburetors Automatic Transmission).** **Reposition the cam and throttle after every screw adjustment to apply normal throttle closing torque.**

*After Approx. 500 Miles (If Necessary).

****Special Note: CAP equipped Vehicles**

Before adjusting idle and/or fast idle speeds and mixtures, make sure that the basic timing and the distributor control valve are correctly adjusted as outlined under Idle Speed Adjustment (Curb Idle) CAP Carburetors.

### *Spring Staged Choke Adjustment*

The new spring staged choke, shown in (Fig. 17) is a device incorporated in the choke mechanism which limits the choke blade closing torque when cranking the engine at temperatures below zero. Thus the spring staging of the choke is a better match for the engine's starting mixture requirements at the low temperatures.

To check the spring staged choke for correct operating clearance, refer to (Fig. 17) then proceed as follows:

(1) Push on hub lever with finger, at closed choke position. A small opening should exist between shaft and hub levers.

(2) Using a drill or gauge, measure opening. The opening should be from .020 to .030 inch.

(3) If an adjustment is necessary, bend the hub lever tang until correct opening has been obtained.

## DASHPOT SETTING AND ADJUSTMENT—C.A.P. CARBURETOR

### *(Manual Transmission Only)*

With the curb idle speed and mixture properly set and a tachometer installed, position the throttle lever so that the actuating tab on the lever is contacting the stem of the dash pot but not depressing it. The tachometer should read 1000 rpm if the setting is correct. To adjust the setting if necessary, screw the dashpot in or out as required. When the dashpot desired setting is obtained, tighten the lock nut on the dashpot against the bracket.

### *Idle Speed Adjustment (Curb Idle) CAP Carburetors*

To make the idle speed adjustment on CAP carburetors, secure an accurate ignition tachometer and a Sun Electric Combustion-Vacuum Unit, Model 80, Exhaust Condenser, Model EC, and Hose 669-14 or equivalent. (The above analyzer is recommended; however, other reliable makes of analyzers in good condition may be used.) Proceed as follows:

(1) Engine running at normal operating temperature, and timing checked and set at 5° at ATDC.

(2) Air Cleaner installed.

(3) Six cylinder engines only—turn headlights on high beam position.

(4) Automatic transmissions in neutral position (not in park position).

(5) On air conditioned vehicles, turn air conditioning **off.**

(6) Connect ignition tachometer.

(7) Insert probe of the exhaust gas analyzer in the tail pipe as far as possible (2 ft. minimum distance). On dual exhaust cars use the left side tail pipe (side opposite heat valve). It is very important that the probe and connecting tubing be free of leaks to prevent erroneous readings. If a garage exhaust system is used to conduct the exhaust gases away, a plenum chamber or other means must be used to reduce the vacuum of the exhaust system to ½ inch water or less.

(8) Connect the exhaust gas analyzer, warm up and calibrate according to manufacturer's instructions.

(9) Place clamp on hose between distributor vacuum control valve and intake manifold.

(10) Set the idle speed to the specified value for the specific engine-transmission combination.

MyMopar.com

**IMPORTANT: When adjusting mixture screws to obtain the air/fuel ratio specified for CAP, do not turn the mixture screw more than 1/16 turn at a time. The combustion analyzer is so sensitive that the ratio must be changed by very small increments if accurate readings are to be obtained. The meters read in air/fuel ratio so that a higher reading indicates a leaner mixture and vice versa.**

(a) Adjust each screw 1/16 turn richer (counterclockwise) and wait 10 seconds before reading the meter.

(b) If necessary, repeat step "a" until the meter indicates a definite increase in richness (lower reading). This step is very important since the meter reverses its readings and indicates a richer mixture as the carburetor is leaned out if the carburetor is set very lean.

(c) When it has been established that the meter is indicating a lower reading (richer mixture) when the idle mixture screws are turnd in the richer direction, proceed to adjust the carburetor to give 14.2 air/fuel ratio, turning the screws counterclockwise (richer) to lower the meter reading and clockwise (leaner) to increase the meter reading.

(d) If the idle speed changes as the mixture screws are turned, adjust the speed to the specified valve and readjust the mixture as required so that 14.2 air/fuel ratio is obtained at the specified idle speed.

(e) If the idle is rough, the screws may be adjusted independently to achieve a smooth idle, provided the air/fuel ratio is held to the 14.2 value.

(11) Remove clamp from distributor vacuum valve hose. If idle speed changes materially check and set valve as described under "Distributor Vacuum Control Valve Adjustment."

# WWC3 SERIES STROMBERG CARBURETOR

## INDEX


| | Page | | Page |
|---|---|---|---|
| Automatic Choke | 2 | General Information | 51 |
| Carburetor Adjustments | 56 | Inspection and Reassembly | 53 |
| Cleaning Carburetor Parts | 1 | Service Diagnosis | 2 |
| Disassembling the Carburetor | 51 | Specifications | 90 |


## GENERAL INFORMATION

The WWC3 Series Stromberg carburetor is a dual throat downdraft type, with each throat having its own idle system, main metering system and throttle valve. The idle and main metering systems are supplemented by the float system, the accelerating system and the power system.

The WWC3 Series carburetor incorporates an idle system vent, operated from the throttle linkage, a double venturi cluster which in addition to the small venturi also includes the discharge nozzles, the main discharge tubes and the idle in a single assembly.

The Standard Stromberg carburetor model WWC3-262 is used on the 383 cu. in. engine-automatic equipped vehicles. Special (CAP-Cleaner Air Package) Stromberg carburetor model WWC#-263 is used on the 383 cu. in. engine-automatic transmission equipped vehicles, and is identified by a dab of green paint on the airhorn, over the top of the accelerator pump shaft.

# SERVICE PROCEDURES

## DISASSEMBLING THE CARBURETOR

To disassemble the carburetor for cleaning or overhaul, refer to (Figs. 1 and 2), then proceed as follows:

(1) Install four elevating legs, Tool T109-287S in mounting flange holes in throttle body. These legs are used to protect throttle valves from damage and to provide a suitable base for working.

(2) Remove hairpin clip that holds pump rod in center of pump arm. Remove rod from slot and disengage from the throttle lever.

(3) Remove hairpin clip that holds fast idle rod in fast idle cam. Disengage rod from cam, then rotate rod to disengage from choke lever.

(4) Remove three short air horn attaching screws, then remove two long air horn attaching screws. Install two short screws through main body into throttle body to hold bodies together. (Refer to Fig. 3.)

(5) Remove vacuum hose between carburetor air horn and vacuum diaphragm.

(6) Remove clip from choke operating link and disengage link from diaphragm plunger (stem) and the choke lever. (Refer to Fig. 1.)

(7) Remove remaining air horn attaching screws, then lift air horn straight up and away from main body, as shown in (Fig. 3).

### *Disassembling the Air Horn*

(1) Disengage accelerator pump plunger from pump arm hook by tilting down and out from under hook, as shown in (Fig. 4). Remove the compression spring.

Place accelerator pump plunger in a jar of clean gasoline or kerosene to prevent leather from drying out.

MyMopar.com

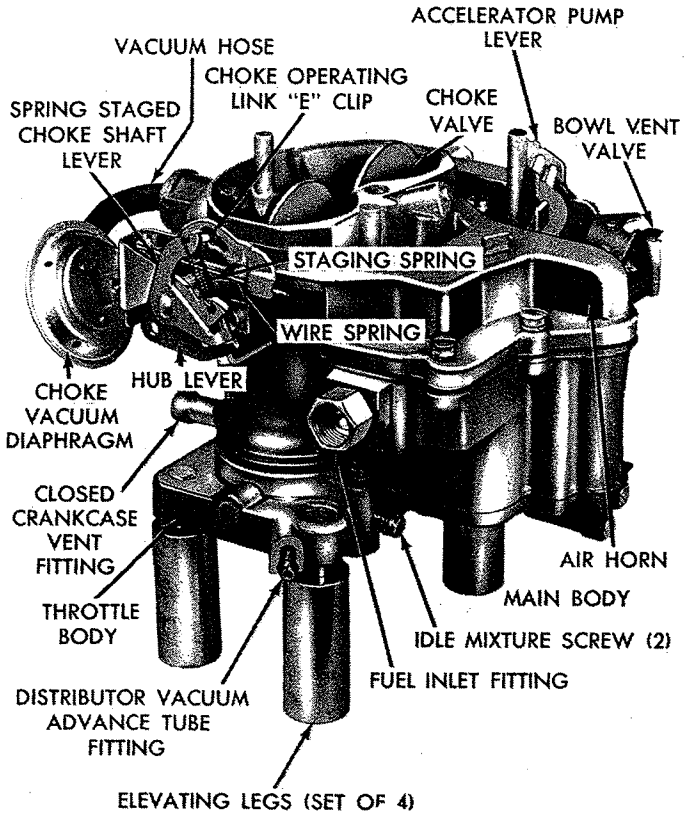


***Fig. 1—Carburetor Assembly WWC3-262 or WWC3-263 (Right Side)***

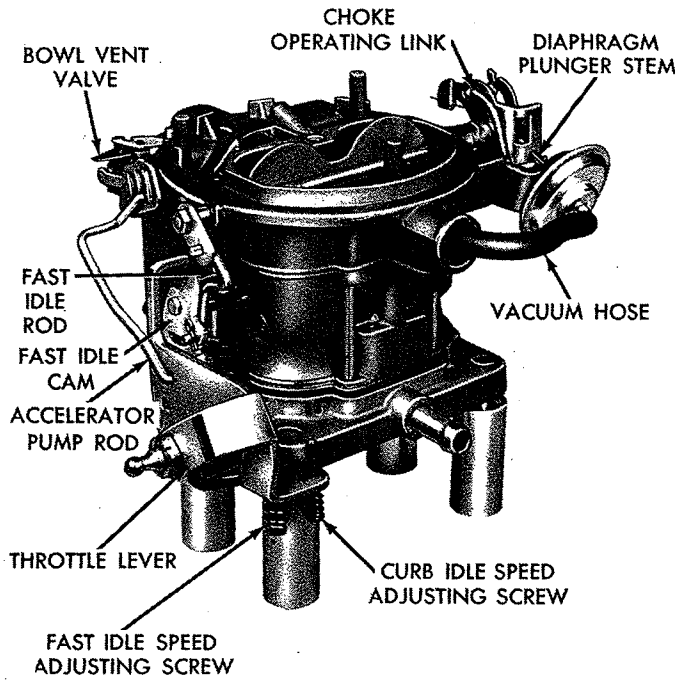


***Fig. 2—Carburetor Assembly WWC3-262 or WWC3-263 (Left Side)***

(2) Remove vacuum power piston from air horn, using an open end wrench and wood block, as shown in (Fig. 5). (Exert sufficient pressure on end of wrench to force piston out of its well in air horn. This assembly is staked in air horn and care should be used at removal.) Discard air horn gasket.

(3) Remove choke vacuum diaphragm and bracket assembly and place to one side to be cleaned as a special item. **A liquid cleaner may damage the diaphragm material.**

(4) Test freeness of choke mechanism in air horn. The choke shaft must float free to operate correctly. If choke shaft sticks in bearing area or appears to be gummed from deposits in the air horn, a thorough cleaning will be required.

## *Main Body*

(1) Remove float fulcrum pin spring, then remove fuel inlet needle valve, seat and gasket.

(2) Slide the float baffle up out of its grooves, then remove the float and fulcrum pin.

(3) Remove venturi cluster attaching screws, then remove venturi cluster gasket, as shown in (Fig. 6). Discard gasket.

(4) Invert carburetor main body and drop out discharge check ball from discharge passage, refer to (Fig. 6), and accelerator pump inlet check ball from the pump well.

(5) Using T109-73S, remove power by-pass jet and gasket, as shown in (Fig. 7).

(6) Using Tool T109-173, remove two main metering jets, as shown in (Figs. 7 or 8).

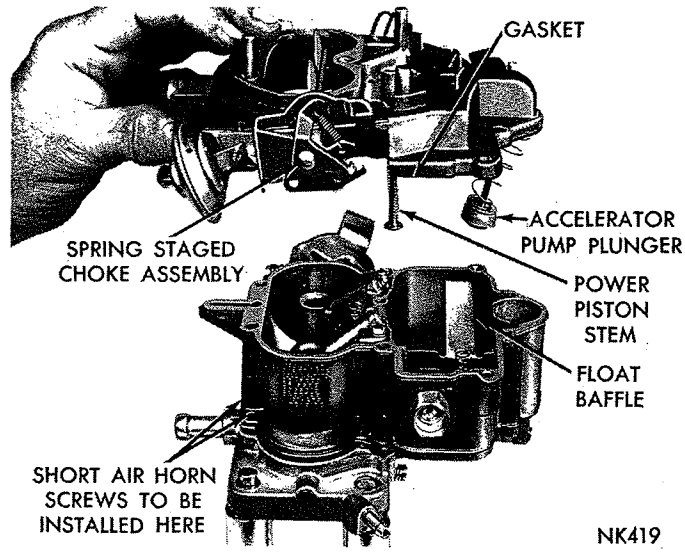


***Fig. 3—Removing or Installing the Air Horn***

MyMopar.com

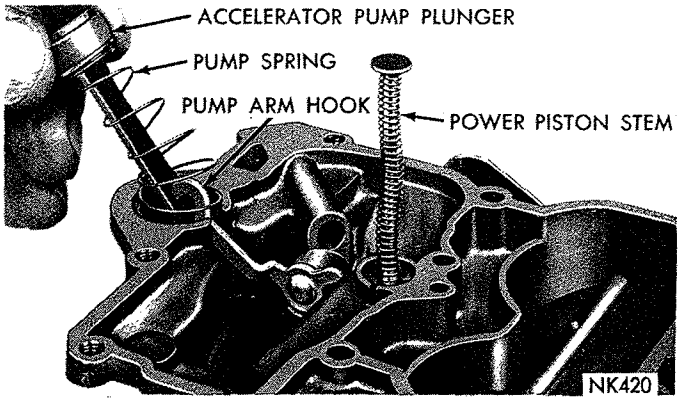


***Fig. 4—Removing or Installing Accelerator Pump Plunger***

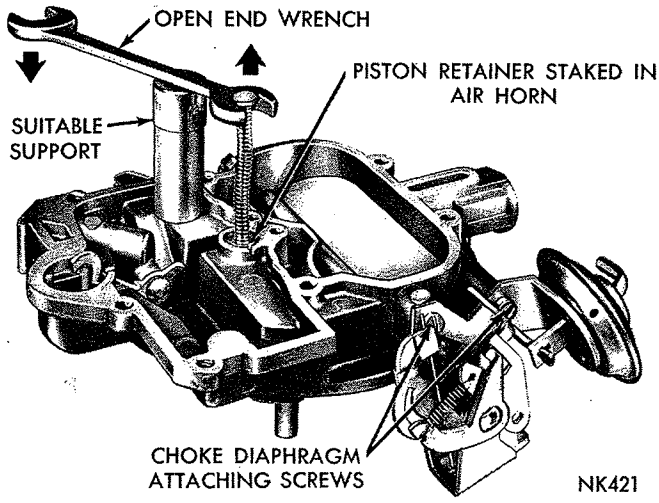


***Fig. 5—Removing the Vacuum Power Piston***

(7) Remove two air horn screws, used to hold main and throttle bodies together. Separate throttle and main bodies, and discard gasket.

### *Throttle Body*

(1) Unscrew and remove two idle mixture adjusting screws and springs from throttle body.

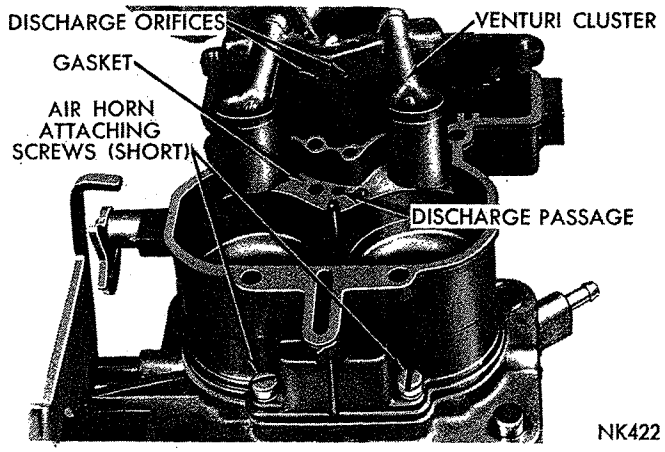


***Fig. 6—Removing or Installing the Venturi Cluster***

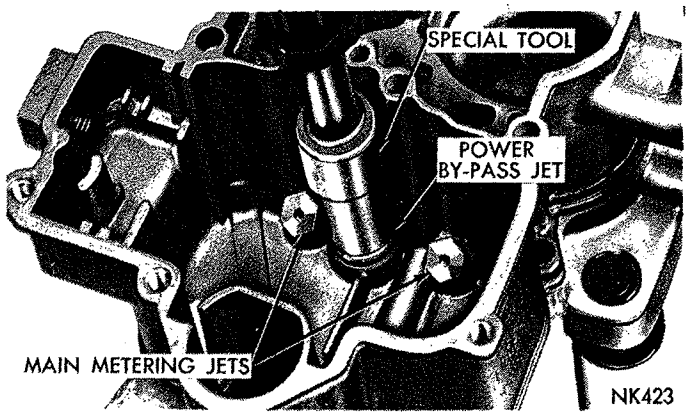


***Fig. 7—Removing or Installing the Power By-Pass Jet***

(2) The carburetor now has been disassembled into three units, namely, air horn, main body and throttle body and the component parts of each disassembled as far as necessary for cleaning and inspection. **It is usually not advisable to remove the throttle shaft or valves unless wear or damage necessitates installation of new parts. To install new valves or throttle shaft, refer to Inspection and Reassembly paragraph. Normal throttle shaft clearance is .005 inch. If wear is over .010 inch, install new shaft.**

## INSPECTION AND REASSEMBLY

### *Throttle Body*

(1) Check throttle shaft for excessive wear in throttle body. If wear is extreme, it is recommended that throttle body be replaced, rather than installing a new throttle shaft in old body.

During manufacture, the location of the idle transfer ports and the spark advance control ports to the valves are carefully established for one particular assembly. See (Fig. 9).

If a new shaft should be installed in an old worn throttle body, it would be very unlikely that the original relationship of these ports to the valves would be obtained. Changing the port relationship would adversely affect normal car operation between the speeds of 15 and 30 miles per hour. However, if it has

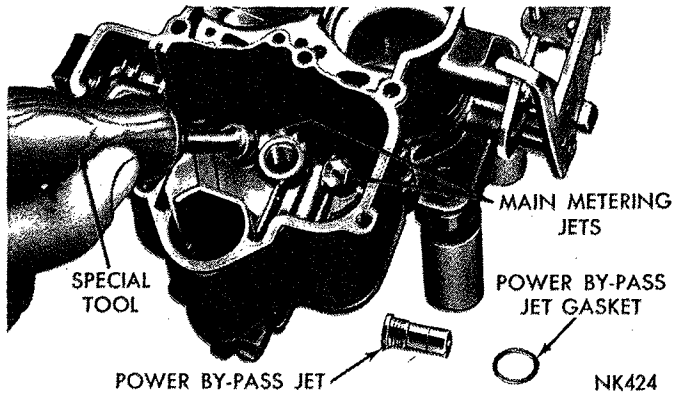


***Fig. 8—Removing or Installing the Main Metering Jets***

MyMopar.com

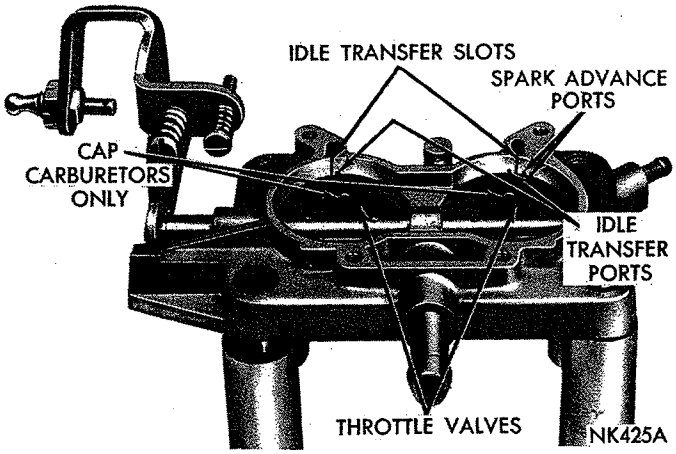


***Fig. 9—Ports in Relation to Throttle Valves***

been determined that a new shaft or valves are to be installed, adhere closely to the following instructions:

To install a new throttle shaft or valves, refer to (Fig. 10), then proceed as follows:

(2) Mark valves to be sure each is replaced in same bore from whence removed (if replacing throttle shaft only).

(3) Remove screws that hold throttle valves to the shaft. Slide the valves out of shaft and bore.

**CAUTION: These screws are staked on the opposite side and care should be used at removal so as not to break the screws in the shaft.**

Remove the staking with a file.

(4) Slide throttle shaft and lever out of throttle body.

(5) Install new throttle shaft and lever in throttle body. **The idle speed adjusting screw must be backed off when seating the valves in the following operation.**

(6) Slide valves down into position. Install new screws but do not tighten. Hold valves in place with fingers pressing on high side of valves.

(7) Tap valve lightly with a screwdriver to seat in throttle bores. Holding valves in this position, tighten

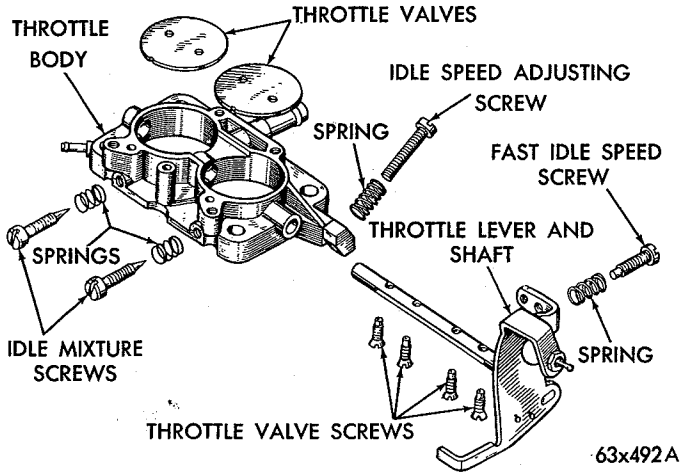


***Fig. 10—Throttle Body (Exploded View)***

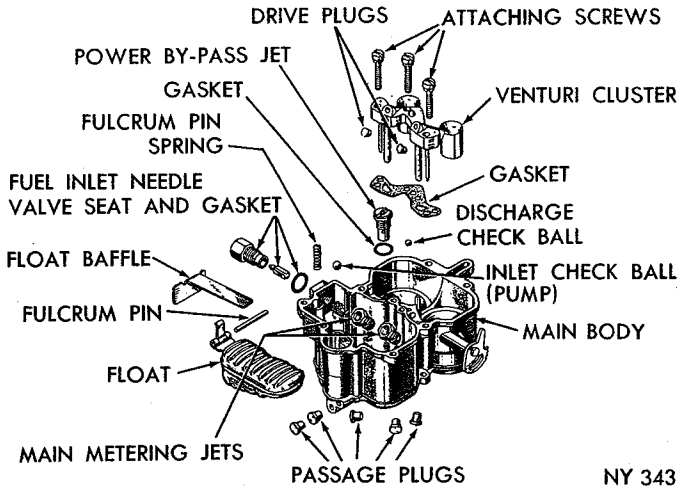


***Fig. 11—Main Body (Exploded View)***

screws securely and stake by squeezing with pliers.

(8) Install two idle mixture adjusting screws and springs in throttle body. (The tapered portion must be straight and smooth.) If tapered portion is grooved or ridged, a new idle mixture adjusting screw should be installed to insure having correct idle mixture control.

### *Idle Mixer Screw Adjustment*

Turn screws **lightly** against their seats, then back off one and a half turns for an approximate setting.

### *Main Body*

To assembly the main body, refer to (Fig. 11), then proceed as follows:

(1) Place a new gasket on throttle body, then install main body. Install two short screws to secure.

(2) Install main metering jets in main body. Tighten securely, using Tool T-109-173. Refer to (Fig. 8).

(3) Install power by-pass jet and new gasket. Tighten securely, using Tool 73598. Refer to (Fig. 7).

(4) Install accelerator pump inlet check ball (3/16 inch) in pump well, as shown in (Fig. 12).

(5) Install accelerator pump discharge check ball (⅛ inch) in discharge passage, as shown in Fig. 13.

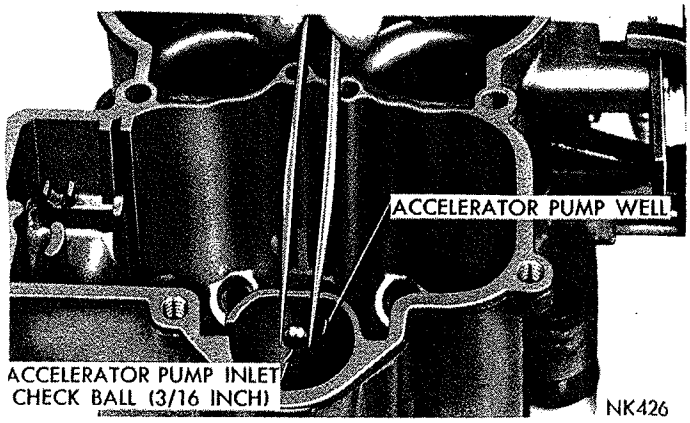


***Fig. 12—Installing Accelerator Pump Inlet Check Ball***

MyMopar.com

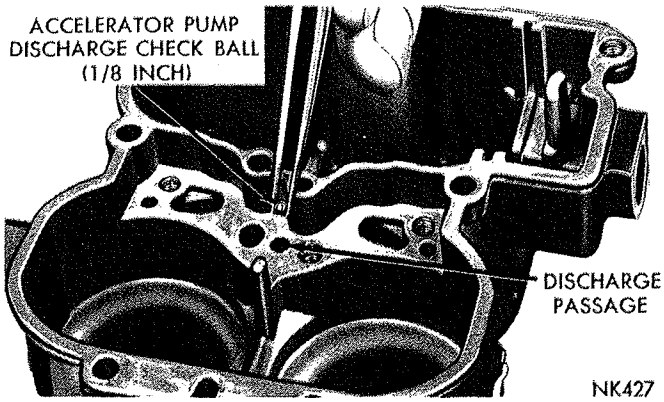


*Fig. 13—Installing the Discharge Check Ball*

### Accelerator Pump Test

(1) Pour clean gasoline into carburetor bowl approximately ½ inch deep. Remove accelerator pump plunger from jar of gasoline and slide down in its well. Raise plunger and press lightly in plunger shaft to expel air from pump passage.

(2) Using a small clean brass rod, hold discharge check ball firmly down on its seat. Raise pump plunger and press downward. No fuel should be emitted from either intake or discharge passage, as shown in (Fig. 14).

(3) If any fuel does emit from either intake or discharge passages, it indicates presence of dirt or an imperfect seat. The passage should be recleaned and then thorougly blown out with compressed air. Examine ball seat for signs of damage that would not allow check ball to seat properly.

(4) Reinstall check ball and test again. If still leaking, place a piece of drill rod down on the check ball and rap sharply with a hammer. Remove old check ball and install a new one. Then retest. (This operation forms a new ball seat in carburetor casting.)

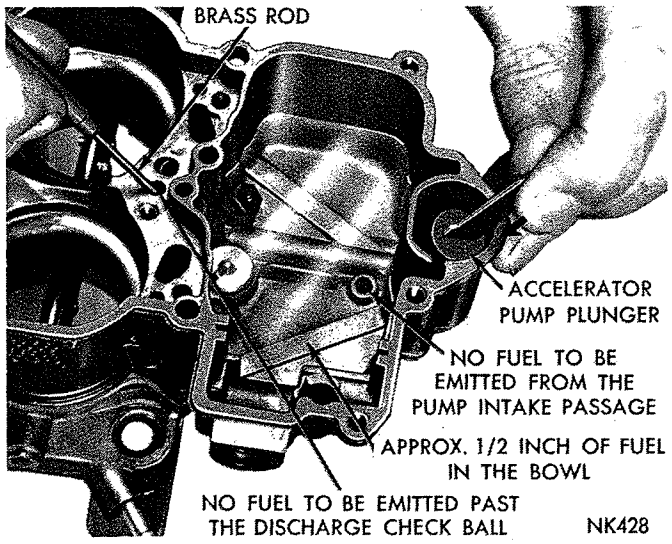


*Fig. 14—Testing Accelerator Pump Discharge and Inlet Check Balls*

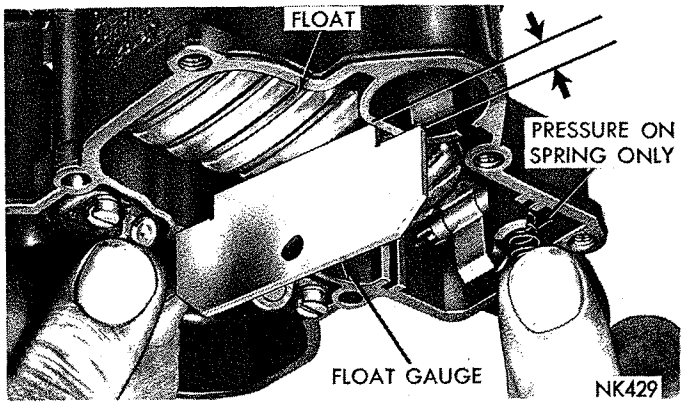


*Fig. 15—Checking the Float Setting*

(5) Install venturi cluster gasket, then slide venturi cluster down into position. Install attaching screws and tighten securely. (Refer to Fig. 6.)

Again depress accelerator plunger. A clear straight stream should emit from each jet orifice. If streams are not identical (if either one is restricted or diverted), remove venturi cluster and reclean.

After test, pour gasoline from bowl and remove pump plunger.

(6) Check float for leak or damage. If satisfactory for further service, install in position in the bowl.

(7) Assemble fuel inlet needle valve, seat and gasket, then insert in main body. Tighten securely. (If needle valve is ridged or grooved, or badly worn, a new inlet needle valve assembly should be installed.)

### Measuring Float Height

The carburetor is equipped with a synthetic rubber-tipped fuel inlet needle.

(1) Invert main body so that weight of floats only is forcing needle against seat. **Be sure hinge pin does not drop out of float hinge.** Hold down with fulcrum pin spring.

(2) Using Tool 73725 or a "T" scale, measure float level, as shown in (Fig. 15). There should be 5/32 inch from surface of fuel bowl to crown of the float at center.

If an adjustment is necessary, remove the float and the fulcrum spring. Bend the lip of the float lever either in or out until the correct setting has been obtained.

**CAUTION: Do not attempt to change the setting without removing the float, as the synthetic rubber tip can be compressed sufficiently to cause a false setting, which will affect correct level of fuel in the bowl.**

**It is important that the float lip is perpendicular to the needle or slanted not more than 10 degrees away from the needle when the float is set correctly. Do not bend float lip by forcing float, use Tool 73605.**

(3) Install float, then slide float baffle down into position. Install fulcrum pin spring.

MyMopar.com

### Assembling the Air Horn

To assemble the air horn, refer to (Fig. 1), then proceed as follows:

(1) Slide hub lever of spring staged choke onto air horn boss. Insert choke shaft into air horn. Connect hub and shaft levers by installing spring (Fig. 1). The shaft lever arm must be properly positioned between stop surfaces of the hub lever. Slide the choke valve down into slot in shaft.

(2) Hold choke valve closed, and install new screws. **DO NOT TIGHTEN.** Holding valve in closed position tap gently with a screwdriver, to center and locate valve.

(3) Tighten attaching screws securely, then stake by squeezing with pliers. Reinstall fast idle lever and secure with lockwasher and nut.

(4) Remove accelerator pump plunger from jar of gasoline. Check the leather. If the leather is hard, cracked, or worn, install a new pump plunger. (Be sure to flex the leather several times before installing plunger in air horn.)

(5) Slide compression spring over plunger shaft, then slide plunger over hook and into position. Refer to (Fig. 4).

(6) Install a new air horn gasket, then install vacuum power piston in air horn. Lock in position by prick punching on air horn rim. Compress piston plunger to be sure no binding exists. If piston sticks or binds enough to hinder smooth operation, install a new piston assembly.

(7) Install air horn assembly on main body, guiding pump plunger into its well. (Be sure leather does not curl or fold back.) Install retaining screws and tighten securely. (Refer to Fig. 2.) **The choke valve must be held partially closed while installing the air horn.**

(8) Remove two short screws holding main body and throttle body together, refer to (Fig. 3), and install air horn. Reinstall two long screws and tighten securely.

(9) Install fast idle rod and secure with hairpin clip.

(10) Install pump rod and secure with hairpin clip. (Be sure rod is in center slot of arm, refer to Fig. 1.) Work accelerator pump plunger several times to be sure it operates smoothly.

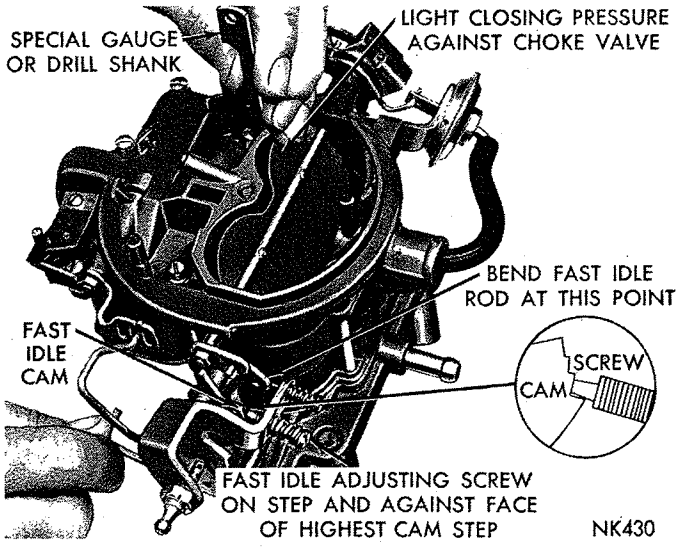


*Fig. 16—Fast Idle Cam Position Adjustment*

### Choke Vacuum Diaphragm

Inspect the diaphragm vacuum fitting to be sure that the passage is not plugged with foreign material. Leak check the diaphragm to determine if it has internal leaks. To do this, first depress the stem, then place a finger over the fitting to seal the opening. Release the stem. If the stem moves more than 1/16 inch in 10 seconds, the leakage is excessive and the assembly must be replaced.

Install the diaphragm assembly on the air horn as follows:

(1) Assemble to air horn and tighten attaching screws securely.

(2) Install choke operating link in position between diaphragm plunger (stem) and choke lever. Install clip to secure. **Be sure link is on the proper side of wire spring. See (Fig. 1).**

(3) Inspect rubber hose for cracks before placing it on correct carburetor fitting. Refer to (Fig. 2). Do not connect vacuum hose to diaphragm fitting until after vacuum kick adjustment has been made. (See Carburetor Adjustments.)

## CARBURETOR ADJUSTMENTS

### Fast Idle Speed and Cam Position Adjustment

The fast idle engine speed adjustment should be made on the vehicle, as described in the Fast Idle Speed Adjustment (On the Car) Paragraph. However, the Fast Idle Cam Position Adjustment can be made on the bench. This adjustment is important to assure that the speeds of each step of the cam, occur at the proper time during engine warm-up.

To make the fast idle cam position adjustment refer to (Fig. 16), then proceed as follows:

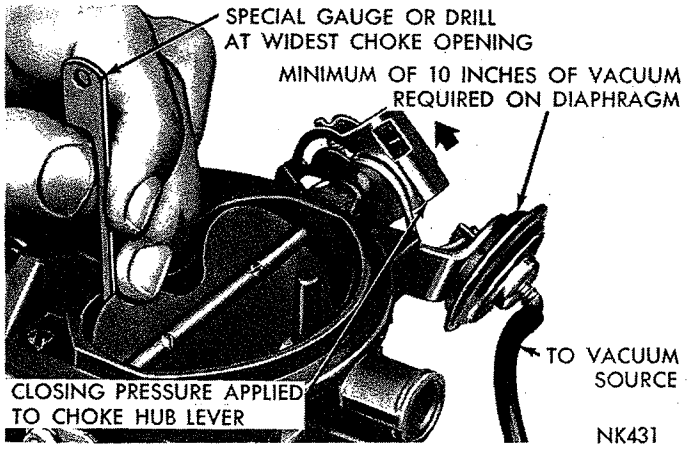


*Fig. 17—Checking the Vacuum Kick Setting*

MyMopar.com

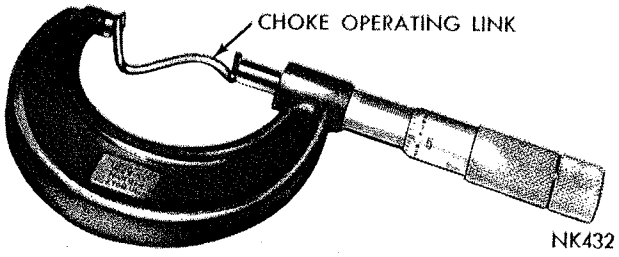


*Fig. 18—Choke Operating Link Measurement*

(1) With fast idle speed adjusting screw contacting step on the fast idle cam shown in (Fig. 17), move choke valve toward closed position with light pressure. Insert a Number 38 drill between choke valve and wall of the air horn.

(2) An adjustment will be necessary if a slight drag is not obtained as drill is being removed.

(3) If an adjustment is necessary, bend fast idle rod at upper angle, using Tool T109-213, until correct valve opening has been obtained.

**Vacuum Kick Adjustment**—(This test can be made **ON** or **OFF** the vehicle.)

The choke diaphragm adjustment controls the fuel delivery while the engine is running. It positions the choke valve within the airhorn by action of the linkage between the choke shaft and the diaphragm. The diaphragm must be energized to measure the vacuum kick adjustment. Use either a distributor test machine with a vacuum source, or vacuum supplied by another vehicle.

(1) With engine **Not** running, open throttle valves far enough to allow the choke valve to be moved to closed position.

(2) Disconnect vacuum hose from diaphragm and connect hose from vacuum supply, as shown in (Fig. 17). (A minimum of 10 inches of mercury (HG) will be required.)

(3) Insert a Number 22 drill (CAP Carburetors) or a Number 28 drill (Standard Carburetors) between the choke valve and wall of air horn. Refer to (Fig. 17). Apply sufficient closing pressure on choke shaft lever to provide smallest opening possible, without distortion of diaphragm link. Note that link must deflect a wire spring before it reaches end of travel within lever slot. The link must travel to end of slot for proper measurement of kick adjustment.

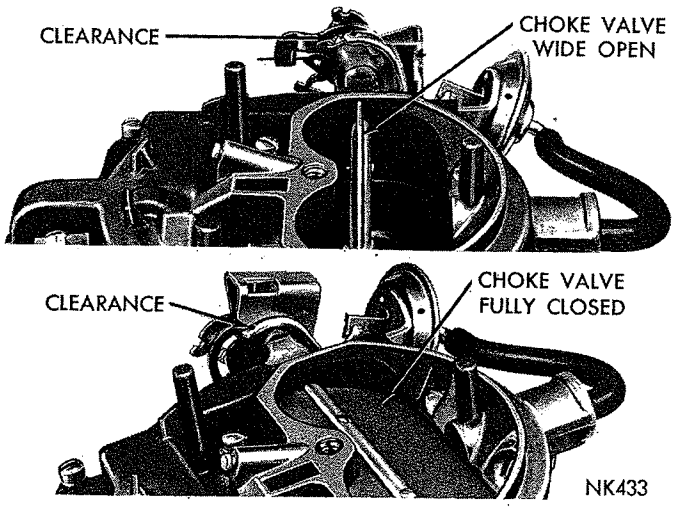


*Fig. 19—Choke Operating Link Clearances*

(4) An adjustment will be necessary if a slight drag is not obtained as drill or gauge is being removed.

The adjustment of this opening will require the removal of the choke operating link.

**CAUTION: Damage to the diaphragm and the choke lever slot can result, if the link is not removed for the bending operation.**

(5) Remove clip and disengage choke operating link from choke lever, then disengage link from diaphragm stem. (The best bending results will be obtained by using a vise and a pair of pliers.)

(6) Bend the choke operating link at angle to provide correct choke valve opening.

**CAUTION: A correction in the length of the link of .010 inch, will result in a change of .010 inch in the choke valve opening.**

As an example, if the choke valve opening is .010 inch in error, the correction in the link length would be .010 inch.

A 2″ micrometer will be helpful in establishing the original length of the link, as shown in (Fig. 18), before completing the adjustment.

(7) Install choke operating link and recheck choke valve opening, using a gauge or drill. Refer to (Fig. 17).

Reinstall the vacuum hose to the diaphragm and make the following check:

(8) With no vacuum applied to diaphragm, some clearance should exist between choke operating link and choke lever slot, in both open and closed choke valve positions, as shown in (Fig. 19). **This clearance is necessary to allow the choke valve to close for starting as well as fully open after the engine reaches the normal operating temperature.**

If a clearance does not exist in both of these positions, a recheck of the operating link adjustment should be made. **Free movement of the choke valve between the closed and open positions is very necessary.**

This free movement should also exist between the kick and the open choke valve positions with the engine running. If binding does exist, the choke operating link has been improperly bent and should be corrected.

### *Unloader Adjustment (Wide Open Kick)*

To make unloader adjustment, refer to (Fig. 20), then proceed as follows:

MyMopar.com

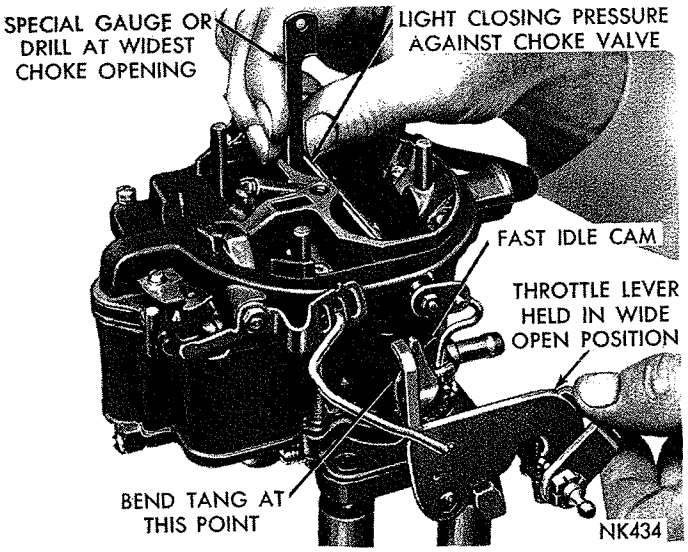


***Fig. 20—Choke Unloader Adjustment (Wide Open Kick)***

(1) Lightly hold choke valve closed, then open throttle valves to wide open position. The choke valve should open sufficiently to allow a 15/64 inch drill or gauge T109-32 to be inserted between choke valve and wall of the air horn as shown.

(2) To adjust, bend tang on throttle lever, using Tool T109-214 until correct opening has been obtained.

(3) Hold choke valve open and then open and close throttle valves. Failure to obtain full throttle operation indicates improper assembly or adjustment of the choke mechanism.

(4) With throttle valves held in an open position, choke valve should fall open freely. There should be no bind throughout the entire travel of the choke mechanism.

### Accelerator Pump Travel

To check the accelerator pump travel, refer to (Fig. 21), then proceed as follows:

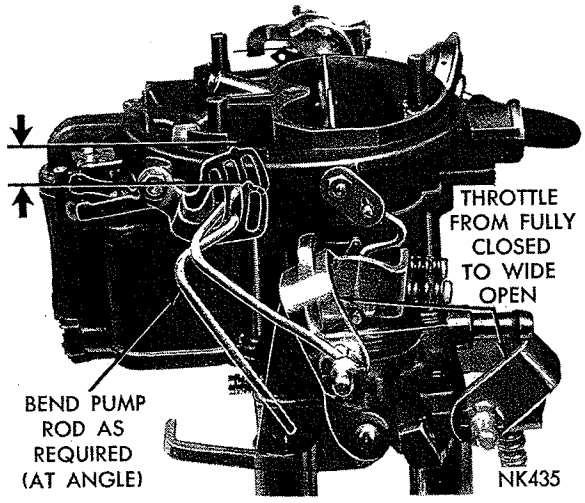


***Fig. 21—Accelerator Pump Travel***

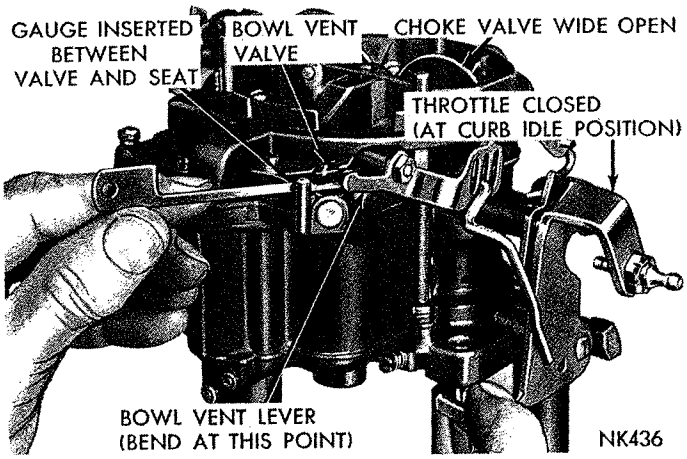


***Fig. 22—Checking the Bowl Vent Valve Opening***

(1) With throttle valves fully closed, measure pump travel from the fully closed to the fully open throttle.

(2) This travel should be 7/16 inch as shown.

(3) If an adjustment is necessary, bend pump rod at point shown, using Tool T109-213, until correct travel has been obtained.

### Bowl Vent Valve Setting

To make bowl vent valve setting, refer to (Fig. 22), then proceed as follows:

This setting is made after the pump travel setting.

(1) With throttle valves at curb idle, there should be 1/16 inch clearance between bowl vent valve and air horn, when measured (at center of vent valve and seat) with a gauge or drill shank.

(2) If an adjustment is necessary, bend bowl vent lever, using Tool T109-214, until correct opening has been obtained. **Any adjustment to the accelerator pump setting, means that the bowl vent must be readjusted.**

### Idle Speed Adjustment (Standard Carburetors)

The idle speed adjustment is made after the carburetor has been installed on the engine.

For the best results, it is recommended that a tachometer be used in this adjustment.

(1) Turn idle speed screw **in** or **out** to obtain 500 rpm. (On vehicles with air conditioning, set idle speed at 500 rpm, with air conditioning ON.) Be sure choke valve is fully open and that fast idle adjusting screw is not contacting fast idle cam (engine off fast idle).

(2) Turn each idle mixture screw **in** or **out** until smooth idle has been obtained.

(3) Readjust to 500 rpm with the idle speed screw.

(4) Repeat idle mixture screw adjustment.

### Fast Idle Speed Adjustment* (On the Vehicle)

To set the fast idle speed on the vehicle, connect a tachometer to the vehicle, then set the curb idle speed and proceed as follows:

MyMopar.com

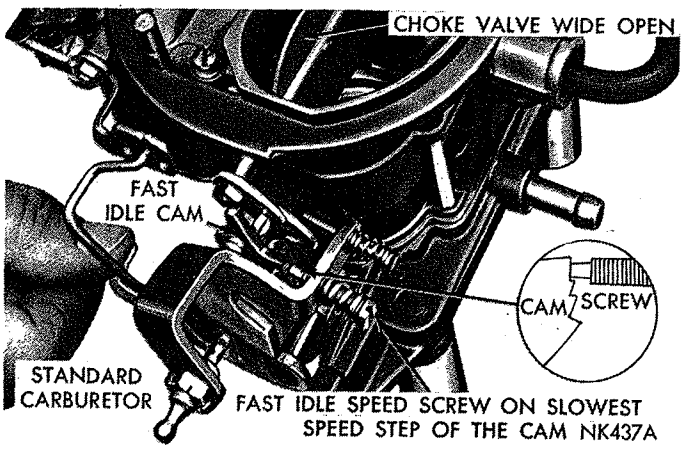


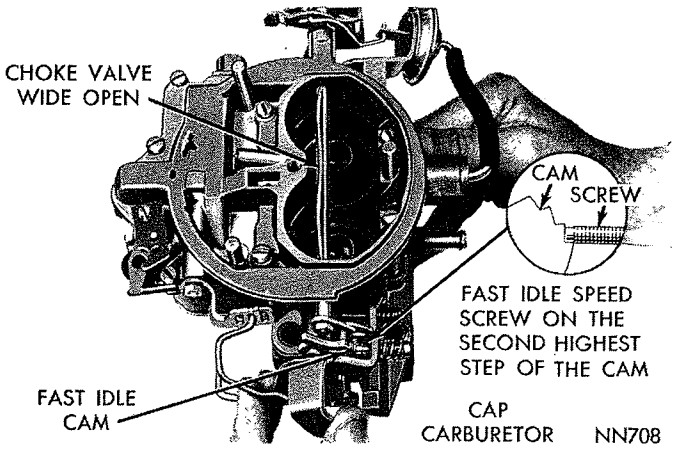


***Fig. 23—Fast Idle Speed Adjustment (on the Engine)***

(1) With the engine running and the transmission in the neutral position, open the throttle slightly.

(2) **On Standard carburetors,** close the choke valve about 20 degrees, then allow throttle to close. Return choke valve to the open position. The fast idle speed adjusting screw should contact the slowest speed step on the fast idle cam (Fig. 23).

(3) **On CAP Carburetors,** open the throttle until the fast idle screw can be positioned on the second highest step of the cam (Fig. 23). **The air cleaner must be installed while measuring the engine speed.**

(4) With the engine warmed up to the normal operating temperature, turn the fast idle speed adjusting screw in or out to secure 700 rpm (Standard carburetors) or 1300 rpm (CAP carburetors).**

**Reposition the cam and throttle after every screw adjustment to apply normal throttle closing torque.**

*After Approx. 500 Miles (If Necessary).

****Special Note: CAP Equipped Vehicles**

Before adjusting idle and/or fast idle speeds and mixtures, make sure that the basic timing and the distributor control valve are correctly adjusted as outlined under Idle Speed Adjustment (Curb Idle) CAP Carburetors.

### *Measuring the Float Setting or Fuel Level (On the Vehicle)*

Remove the three short air horn to main body at taching screws. Then remove one long air horn t throttle body screw next to fuel bowl and assembl short screw through main body flange and thread int the throttle body. Remove long screw from sid away from fuel bowl and on opposite side and assem ble short screw through main body flange. Securel tighten. Remove the air horn as follows:

(1) Remove spring clip and disconnect choke oper ating rod.

(2) Remove hairpin clip and disconnect the fast idl rod.

(3) Remove hairpin clip that holds pump rod ir center slot of pump arm. Disconnect pump rod.

(4) Remove remaining two long screws and lift of air horn.

Check the float setting as follows:

(5) Seat float fulcrum pin by pressing finge against fulcrum pin spring.

There should be enough fuel in the bowl to rais the float so that lip bears firmly against needle. Addi tional fuel may be admitted by slightly depressing th float. If the pressure in the line is insufficient to force additional fuel into the bowl, add the necessary fue from a clean container.

**CAUTION: Since the manifolds may be hot, it i dangerous to spill onto these surfaces. Therefore, take the necessary precautions to avoid spillage.**

(6) With only pressure from the buoyant float holding lip against inlet needle, check float setting using Tool 73725 or "T" scale. There should be 5/32 inch from the surface of bowl (gasket removed) to the top of float at the center.

If an adjustment is necessary, hold the float on the bottom of the bowl, then bend the float lip toward or away from the needle, using Tool 73605. Recheck the 5/32 inch setting again, then repeat the lip bending operation as required.

**CAUTION: When bending the float lip, do not allow the lip to push against the needle as the rubber tip can be compressed sufficiently to cause a false setting which will affect correct level of fuel in the bowl. After being compressed, the rubber tip is very slow to recover its original shape.**

It is very important that the float lip be perpendicular to the needle or slanted not more than 10 degrees away from the needle when the float is set correctly.

(7) Reassemble air horn.

### *Spring Staged Choke Adjustment*

The new spring staged choke, shown in (Fig. 24) is a device incorporated in choke mechanism which limits choke blade closing torque when cranking the engine at temperatures below zero. Thus the spring

MyMopar.com

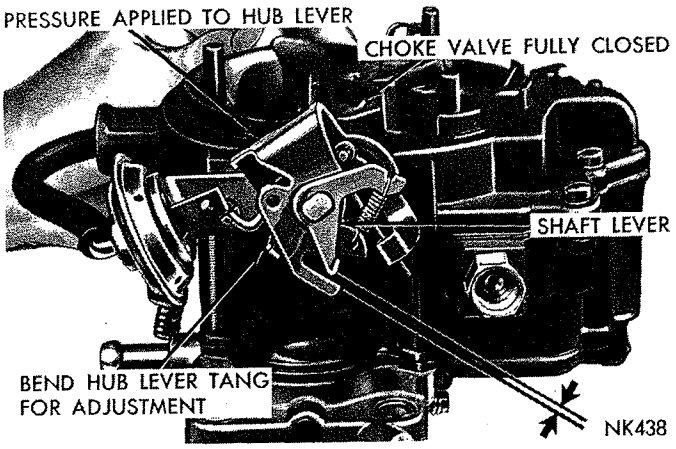


***Fig. 24—Spring Staged Choke Clearance***

staging of the choke is a better match for the engine's starting mixture requirements at the low temperatures.

To check the spring staged choke for correct operating clearance, refer to (Fig. 24), then proceed as follows:

(1) Push on hub lever with finger, at closed choke position. A small opening should exist between the shaft and hub levers, as shown in (Fig. 24).

(2) Using a drill or gauge, measure opening. The opening should be from .010 to .040 inches.

(3) If an adjustment is necessary, bend hub lever tang until the correct opening has been obtained.

### *Idle Speed Adjustment (Curb Idle) CAP Carburetors*

To make the idle speed adjustment on CAP carburetors, secure an accurate ignition tachometer and a Sun Electric Combustion-Vacuum Unit, Model 80, Exhaust Condenser, Model EC, and Hose 669-14 or equivalent. (The above analyzer is recommended; however, other reliable makes of analyzers in good condition may be used.) Proceed as follows:

(1) Engine running at normal operating temperature, and timing checked and set at 5° ATDC.

(2) Air Cleaner installed.

(3) Six cylinder engines only—turn headlights on high beam position.

(4) Automatic transmissions in neutral position (not in park position).

(5) On air conditioned vehicles, turn air conditioning **off.**

(6) Connect ignition tachometer.

(7) Insert probe of the exhaust gas analyzer in the tail pipe as far as possible (2 ft. minimum distance). On dual exhaust cars use the left side tail pipe (side opposite heat valve). It is very important that the probe and connecting tubing be free of leaks to prevent erroneous readings. If a garage exhaust system is used to conduct the exhaust gases away, a plenum chamber or other means must be used to reduce the vacuum of the exhaust system to ½ inch water or less.

(8) Connect the exhaust gas analyzer, warm up and calibrate according to manufacturer's instructions.

(9) Place clamp on hose between distributor vacuum control valve and intake manifold.

(10) Set the idle speed to the specified value for the specific engine-transmission combination.

**IMPORTANT: When adjusting mixture screws to obtain the air/fuel ratio specified for CAP, do not turn the mixture screw more than 1/16 turn at a time. The combustion analyzer is so sensitive that the ratio must be changed by very small increments if accurate readings are to be obtained. The meters read in air/fuel ratio so that a higher reading indicates a leaner mixture and vice versa.**

(a) Adjust each screw 1/16 turn richer (counterclockwise) and wait 10 seconds before reading the meter.

(b) If necessary, repeat step "a" until the meter indicates a definite increase in richness (lower reading). This step is very important since the meter reverses its readings and indicates a richer mixture as the carburetor is leaned out if the carburetor is set very lean.

(c) When it has been established that the meter is indicating a lower reading (richer mixture) when the idle mixture screws are turned in the richer direction, proceed to adjust the carburetor to give 14.2 air/fuel ratio, turning the screw counterclockwise (richer) to lower the meter reading and clockwise (leaner) to increase the meter reading.

(d) If the idle speed changes as the mixture screws are turned, adjust the speed to the specified valve and readjust the mixture as required so that 14.2 air/fuel ratio is obtained at the specified idle speed.

(e) If the idle is rough, the screws may be adjusted independently to achieve a smooth idle, provided the air/fuel ratio is held to the 14.2 value.

(11) Remove clamp from distributor vacuum valve hose. If idle speed changes materially check and set valve as described under "Distributor Vacuum Control Valve Adjustment."

MyMopar.com

# AFB SERIES CARTER CARBURETOR

## INDEX


| | Page |
|---|---|
| Automatic Choke | 2 |
| Carburetor Adjustments | 67 |
| Accelerator Pump | 69 |
| Choke Unloader (wide open kick) | 69 |
| Fast Idle Adjustment—(on the car) | 70 |
| Idle Speed Adjustment—(curb idle) | 69 |
| Secondary Throttle Lever Adjustment | 69 |
| Secondary Throttle Lock-out Adjustment | 69 |
| Cleaning Carburetor Parts | 1 |
| Closed Crankcase Vent System | 2 |
| Disassembling the Carburetor | 61 |
| General Information | 6 |
| Inspection and Reassembly | 64 |
| Specifications | 90 |


## GENERAL INFORMATION

**The Standard Carter AFB** carburetor models AFB-4130S and AFB-4131S are used on the 383 and 426 cu. in. engines when the vehicles are equipped with the manual or automatic transmission respectively.

**The Special (CAP-Cleaner Air Package)** Carter carburetors models AFB-4132S and AFB-4136S are used on the 383 and 426 cu. in. engines respectively, when the vehicles are equipped with a manual transmission. These two carburetors are supplied with a dash pot which is mounted on the carburetor. The dash pot (used only on manual transmission equipped vehicles) retards the return of the throttle to idle position. **The proper adjustment of the dash pot is very important! (See Carburetor Adjustments.)**

**The Special (CAP-Cleaner Air Package)** Carter carburetor models AFB-4133S and AFB-4137S are used on the 383 and 426 cu. in. engines respectively, when the vehicles are equipped with the automatic transmission.

All CAP AFB carburetors are identified by a green tag mounted on an air horn attaching screw.

Since the service procedures are identical on all Carter AFB carburetors, the illustrations showing the various disassembly procedures will not always show any one specific carburetor.

**The Standard Carter AFB** carburetor models AFB-4119S and AFB-4120S are used on the 273 cu. in. engine when the vehicle is equipped with a manual or automatic transmission respectively.

**The Special (CAP-Cleaner Air Package) Carter** carburetor models AFB-4121S and AFB-4122S are used on the 273 cu. in. engine when the vehicles are equipped with a manual or automatic transmissions respectively. The dash pot which is mounted on the carburetor, (manual transmissions only) retards the return of the throttle to idle position. **The proper adjustment of the dashpot is very important. (See Carburetor Adjustments.)**

The 273 Cu. In. AFB carburetors are equipped with a pair of velocity valves, which control the secondary valve operation.

The throttle valves of the secondary half of the carburetor are mechanically connected to the primary valves and open with the primary after an approximate 60° lag; and continue to open until both primary and secondary throttle valves reach the wide open position simultaneously. As engine speed increases, the forces exerted by the velocity of intake air down through the venturis of the carburetor increases and tends to overcome the counterweight attached to the velocity shaft, permitting the offset velocity valves to position themselves according to engine requirements.

The AFB (aluminum four barrel) carburetor contains many features, some of which are the locations for the step-up rods and pistons. The step-up rods, pistons and springs are accessible for service without removing the air horn or the carburetor from the engine. The venturi assemblies (primary and secondary) are replaceable and contain many of the calibration points for both the high and low speed system. One fuel bowl feeds both the primary and secondary nozzles on the right side while the other fuel bowl takes care of the primary and secondary nozzles on the left side. This provides improved performance in cornering, quick stops and acceleration.

All the major castings of the carburetor are aluminum, with the throttle body cast integral with the main body. This allows an overall height reduction in the carburetor. The section containing the accelerator pump is termed the primary side of the carburetor. The rear section is the secondary. The five conventional systems used in previous four barrel carburetors are also used in this unit. The five conventional systems are, two float systems, two low speed systems, (primary side only) two high speed systems, one accelerator pump system and one automatic choke control system.

## SERVICE PROCEDURES

### DISASSEMBLING THE CARBURETOR

To disassemble the carburetor for cleaning or overhaul, refer to (Fig. 1), then proceed as follows:

(1) Place carburetor assembly on repair stand Tool C-3400 or T-109-287S elevating legs. These tools are used to protect throttle valves from damage and to

MyMopar.com

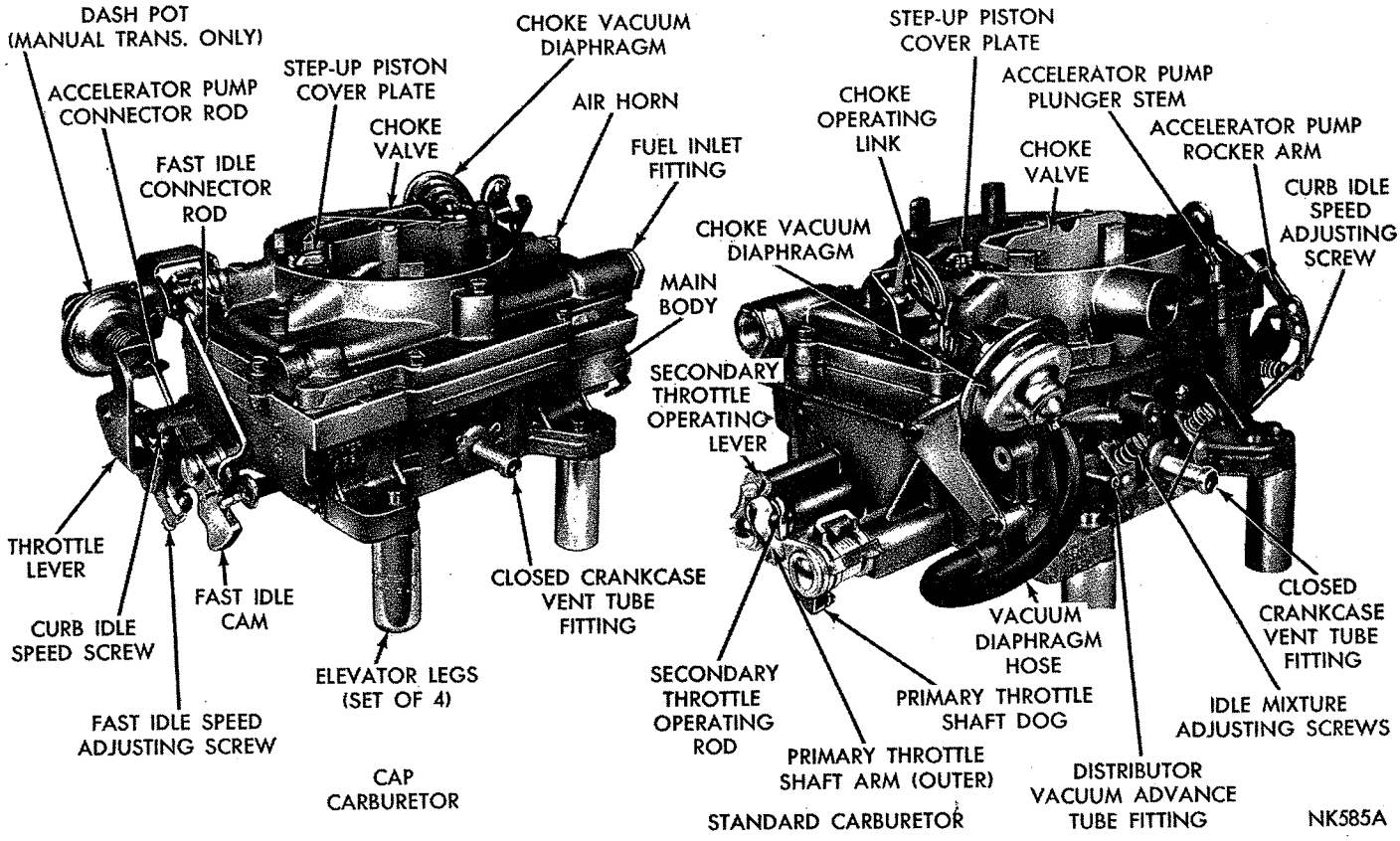


***Fig. 1—Carburetor Assembly (Carter AFB)***

provide a suitable base for working.

(2) Remove hairpin clip that attaches fast idle connector rod to choke lever. Disengage rod from lever, then swing rod at an arc until it can be disengaged from fast idle cam.

(3) Remove celvis pin that holds throttle connector rod in center hole of accelerator pump arm. Remove hairpin clip that attaches lower end of rod in primary throttle shaft lever. Disengage rod from arm and lever, then remove from carburetor.

(4) Remove screws attaching step-up piston and rod cover plates. **Hold cover down with a finger to prevent piston and rods from flying out.** Lift off plates and slide step-up pistons and rods out of air horn, as shown in (Fig. 2). Remove step-up piston springs.

(5) Remove vacuum hose between carburetor throttle body and vacuum diaphragm.

(6) Remove clip from choke operating link and disengage link from diaphragm plunger (stem) and choke lever. Refer to (Fig. 1).

(7) Remove vacuum diaphragm and bracket assembly and place to one side to be cleaned as a special item. **A liquid cleaner may damage diaphragm material.**

(8) Remove ten screws that attach air horn to main body. (1 screw in hole in air horn.) Lift air horn straight up and away from main body. **When removing air horn, use care so as not to bend or damage floats.** Remove accelerator pump, plunger lower spring from pump cylinder. Remove dash pot (if so equipped).

### *Disassembling the Air Horn*

Place air horn in an inverted position on bench (to

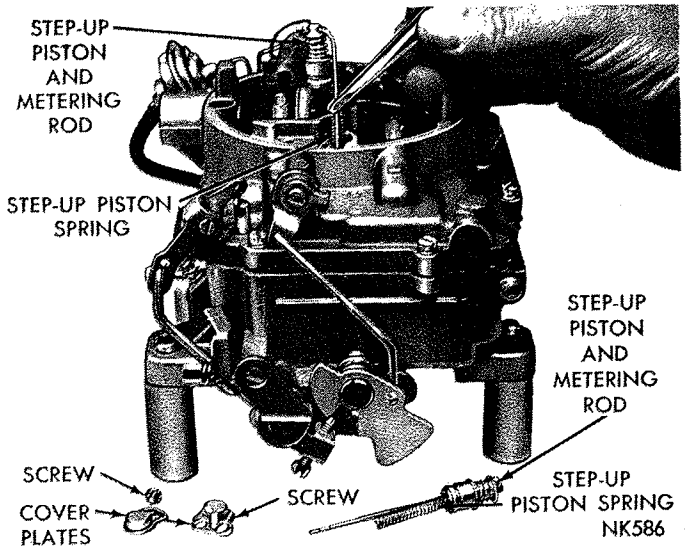


***Fig. 2—Removing or Installing Step-Up Pistons and Rods***

MyMopar.com

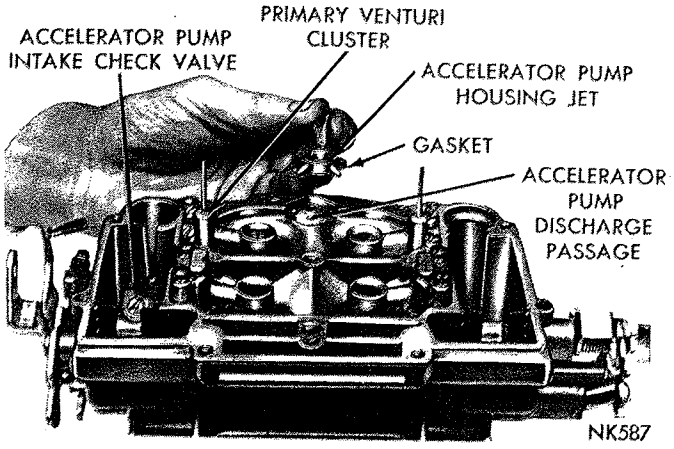


***Fig. 3—Removing or Installing Accelerator Pump Jet Housing***

protect the floats) then proceed to disassemble as follows:

(1) Using a suitable Tool, remove float fulcrum pins, (left and right) then lift float up and out of bosses on air horn. **It is suggested that the float on the pump side be marked so that the floats can be reinstalled in their respective positions.**

(2) Remove two needle valves from their respective seats, after marking one on pump side for identification. Using a wide blade screw driver, remove needle valve seats. Be sure each needle valve is returned to its original seat at reassembly.

(3) Remove spring clip that holds throttle connector rod in center hole of pump arm. Remove pump arm pivot screw and lift off pump arm, at same time, disengage link from arm and pump stem. Slide the accelerator pump plunger and spring out of air horn. Remove gasket.

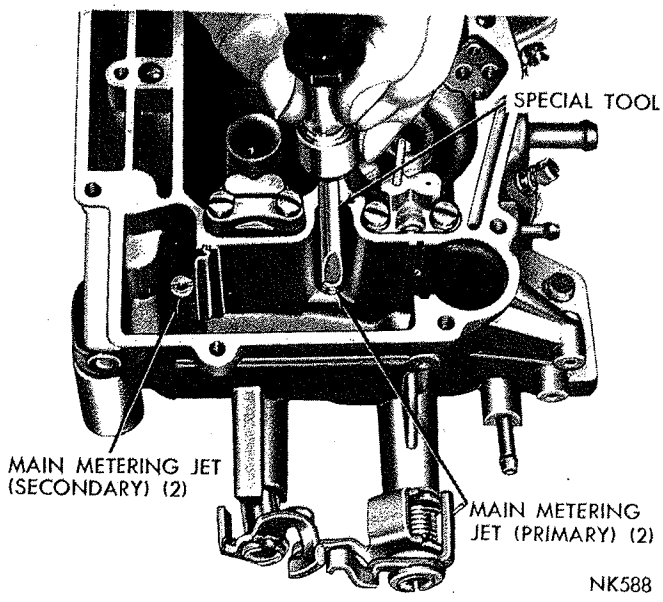


***Fig. 4—Removing or Installing Main Metering Jets***

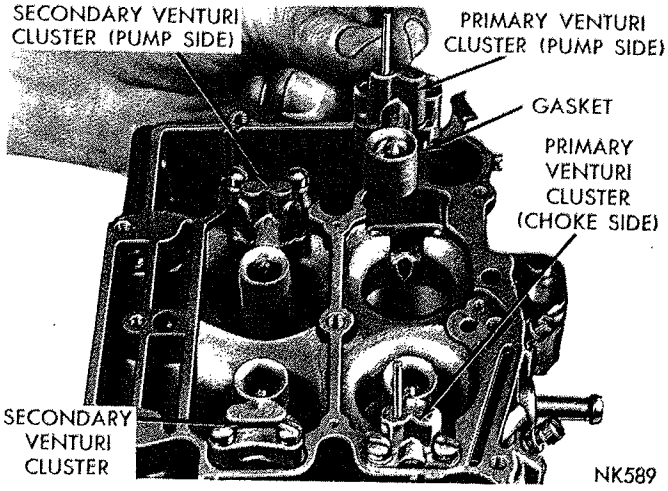


***Fig. 5—Removing or Installing Primary Venturi Cluster***

(4) Place accelerator pump plunger in a jar of clean gasoline or kerosene, to prevent leather from drying out.

(5) Remove fuel inlet fitting and filter screen from the horn.

(6) Test freeness of choke mechanism in air horn. The choke shaft must float free to operate correctly. If choke shaft sticks in bearing area, or appears to be gummed from deposits in the air horn, a thorough cleaning will be required.

### *Main Body Disassembly*

(1) Remove screws that attach accelerator pump jet housing to main body. Lift out jet housing and gasket as shown in (Fig. 3). Discard gasket. Now, invert main body drop out discharge check needle from discharge passage.

(2) Using Tool T109-58, remove main metering jets (primary side), as shown in (Fig. 4). **The primary and secondary main metering jets are not interchangeable. It is very important that these jets be installed**

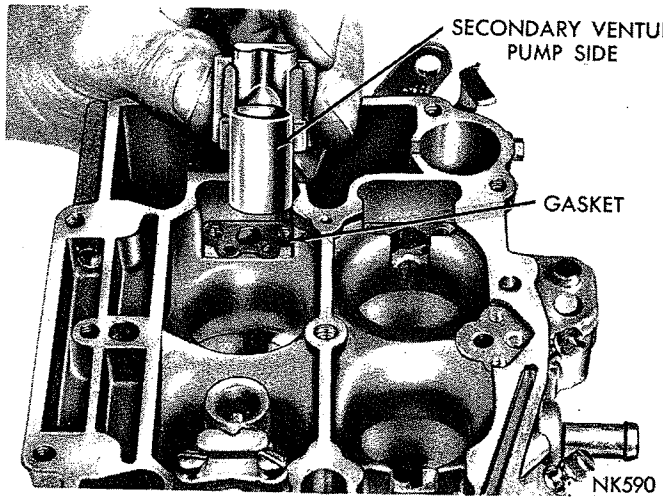


***Fig. 6—Removing or Installing Secondary Venturi Cluster***

MyMopar.com

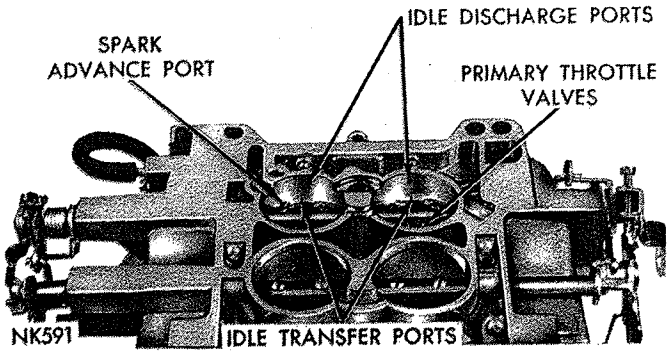


*Fig. 7—Ports in Relation to Throttle Valves*

**in their respective locations in the main body at reassembly.**

(3) Again using Tool T109-58, remove main metering jets (secondary side), as shown in (Fig. 4).

(4) Remove screws that attach primary venturi (choke and pump side) to main body. Lift the venturi straight up and away from main body, as shown in (Fig. 5). Discard the gaskets. **The venturi assemblies are not interchangeable, side for side and must be reinstalled in their original locations at reassembly.**

(5) Remove screws that attach secondary venturi (choke and pump side) to main body. Lift secondary venturi assemblies straight up and away from the body, as shown in (Fig. 6). Remove the velocity valves (if so equipped).

(6) Using Tool T109-59, screw driver bit, remove accelerator pump intake check valve located inside fuel bowl, adjacent to the accelerator pump cylinder.

**On CAP carburetors, do not remove the idle mixture adjusting screws from the throttle body. These screws have limited travel and will be broken if removed.**

The carburetor now has been disassembled into two units, namely the air horn and the main and throttle body casting. The component parts of each have been disassembled as far as necessary for cleaning and inspection.

It is usually not advisable to remove the throttle shafts or valves unless wear or damage necessitates the installation of new parts. During the manufacture of the carburetor, the location of the idle transfer ports and the idle discharge ports to the valve is carefully established for one particular assembly, as shown in (Fig. 7). The valves are milled to give the proper port relation.

If new throttle shafts should be installed in an old worn body, it would be very unlikely that the original relationship of these ports to the valves would be obtained. A very slight change in the port relationship to the valves would adversely affect normal carburetor operation, between the speeds of 15 and 30 miles per hour.

It is recommended that if the throttle shafts are excessively worn, that a new carburetor be installed. However, if the throttle valves have become nicked, burred or damaged, new valves may be installed, providing the following instructions are carefully followed. **The screws that attach the throttle valves are staked on the opposite side and care should be used in removal so as not to break the screws in the throttle shaft. Remove the staked portion of the screws with a file.**

Remove the screws that attach the primary throttle valves to the throttle shaft and slide valve (or valves) out of bores.

Remove the screws that attach the secondary throttle valves to the throttle shaft and slide valve (or valves) out of bores.

The primary valves and secondary valves are not interchangeable and should be kept separate in order that each may be returned to its respective bore. (See Fig. 8.)

## INSPECTION AND ASSEMBLY

(1) Slide primary throttle valve (or valves) into their respective bores, install new screws, but do not tighten. Be sure idle speed adjusting screw is backed out. Hold valves in place with fingers. (Fingers pressing on high side of valves.)

(2) Tap valves lightly in this position, tighten screws securely. Stake screws by squeezing with pliers.

(3) Turn the idle mixture adjusting screws lightly against their seats, then back off one full turn for an approximate adjustment. **Do not use a screwdriver.** Install the velocity valves, (if so equipped).

(4) Place new secondary venturi gaskets in position, then install secondary venturi (pump and choke side) by lowering straight down on gaskets. Install attaching screws and tighten securely. **Be sure all the metering holes and vent tubes are clean, in both the primary and secondary venturi.**

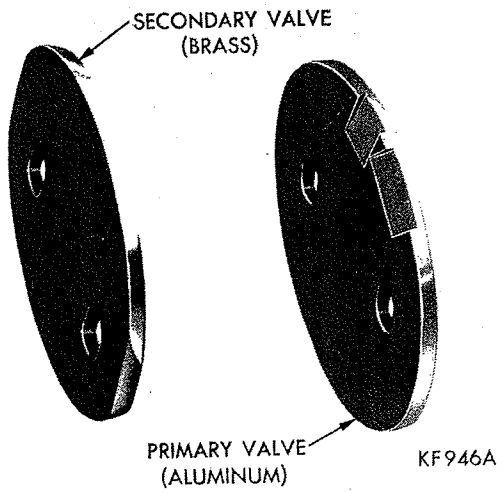


*Fig. 8—Throttle Valve Identification*

MyMopar.com

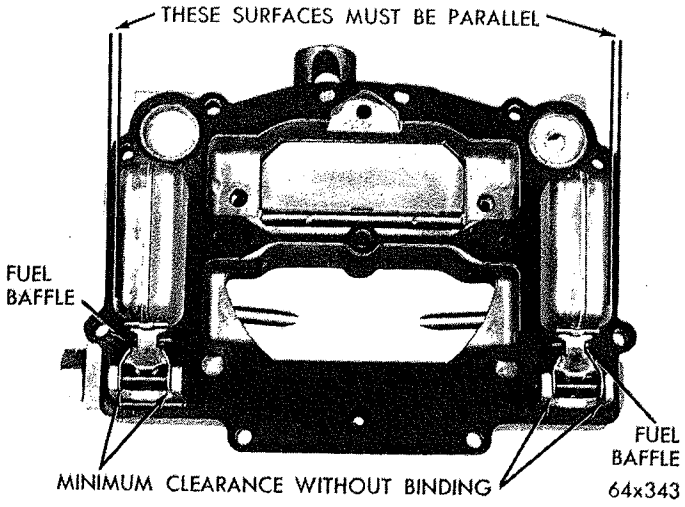


***Fig. 9—Checking Float Alignment***

(5) Place new primary venturi gaskets in position, then install the primary venturi (pump and choke side) by lowering straight down on gaskets. Refer to (Fig. 5). Install attaching screws and tighten securely.

(6) Install primary and secondary main metering jets, using Tool T109-58. Refer to (Fig. 4). Tighten jets securely.

(7) Install accelerator pump intake check ball using Tool T-109-59.

### Accelerator Pump Test

(1) Pour clean gasoline into carburetor bowl (approximately ½ inch deep). Remove the accelerator pump plunger from the jar of gasoline. Flex the leather several times, then slide into pump cylinder.

(2) Install accelerator pump discharge check needle in discharge passage. Raise pump plunger and press lightly on plunger shaft to expel air from pump passages. Using a small clean brass rod, hold discharge check needle firmly on its seat. Again raise plunger and press downward. No fuel should be emitted from either the intake or discharge passage.

(3) If fuel does emit from intake passage, remove intake check ball and reclean the passage. Fuel leakage at the discharge check needle indicates the presence of dirt or a damaged check needle. Clean again and then install a new check needle. Retest for leakage.

(4) If either intake check assembly or discharge check needle leaks after above test and service fix, attempt to reseat as follows:

### Intake Check Ball

Remove the intake check assembly from the throttle body. Install a new check assembly, then retest as described previously.

### Discharge Check Needle

(1) With the discharge check needle installed, insert a piece of drill rod down on the needle. Lightly tap the drill rod with a hammer to form a new seat. Remove and discard old needle and install a new one. Retest as described previously. If the service fix does not correct the condition, a new carburetor will have to be installed.

(2) Install accelerator pump discharge check needle, jet housing and gasket. Install housing and attaching screws. Tighten screws securely.

(3) Press down on accelerator pump plunger shaft, and as plunger is being depressed, a clear straight stream should emit from each jet. If the streams are not identical, (if either one is diverted or restricted) a new accelerator pump jet housing should be installed. After test, pour gasoline from carburetor bowl and remove pump plunger.

### Assembling the Air Horn

(1) Slide fuel inlet screen into fuel line fitting, then install in air horn. Tighten securely.

(2) Check to see if leather on accelerator pump plunger is hard, cracked or worn. If any sign of wear or deterioration is evident, install a new plunger assembly.

(3) When reassembling, make sure the large diameter of pivot screw enters hole in pump arm and that shoulder on screw has not pinched pump arm.

The carburetors are equipped with synthetic rubber tipped fuel inlet needles. The needle tip is a rubber material which is not affected by gasoline and is stable over a wide range of temperatures. The tip is flexible enough to make a good seal on the needle seat, and to give increased resistance to flooding.

The use of new inlet needles require that care be used when making float adjustments. Avoid applying any pressure on the floats which might compress the tip of the fuel inlet needles. **The tip can be compressed sufficiently to cause a false setting which will affect correct level of fuel in the bowl.**

(4) Place a new air horn to main body gasket in position on air horn, then install float needle valve seats. (Be sure each needle seat and needle is reinstalled in its original position.)

(5) Slide right and left floats into position in air horn, then install float fulcrum pins. **(Be sure marked float is installed on pump side of the air horn.)** See disassembly procedures.

(6) After floats have been installed, check float alignment, level and drop settings as follows:

### Float Alignment Setting

(1) Sight down side of each float shell to determine if side of the float is parallel to outer cage of air horn casting, as shown in (Fig. 9).

(2) If sides of float are not in alignment with edge of casting, bend float lever by applying pressure to end of the float shell with the thumb. **To avoid damage to the float, apply only enough pressure to bend the float lever.**

MyMopar.com

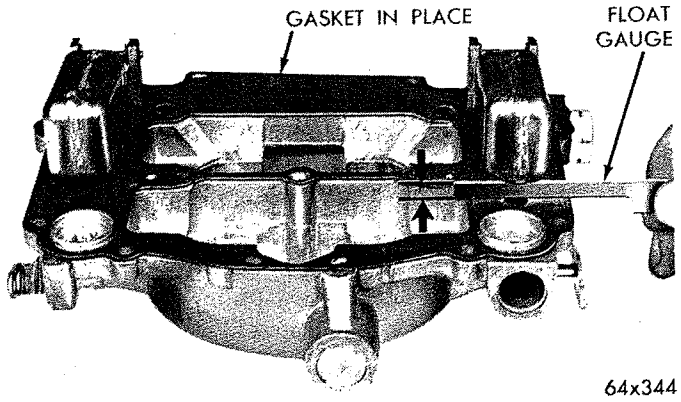


*Fig. 10—Checking Float Height*

(3) After aligning floats, remove as much clearance as possible between arms of float lever and lugs of air horn. To do this, bend float lever. The arms of the float lever should be as parallel as possible to the inner surfaces of the lugs or the casting.

### Float Level Setting

(1) With air horn inverted, air horn gasket in place and the float needle seated, slide float gauge (refer to specifications for carburetor being worked on) between top of the float (at outer end) and air horn gasket, as shown in (Fig. 10). Float should just touch gauge (T109-106).

(2) Check other float in same manner. If an adjustment is necessary, bend float arm using Tool T109-22, until correct clearance has been obtained. After bending arm, recheck the float alignment.

### Float Drop Setting

(1) Holding air horn in an upright position, measure distance from the top of floats (outer end) to the air horn gasket, as shown in (Fig. 11). This measurement should be ¾ inch. If an adjustment is necessary, bend the stop tabs on float levers until correct drop setting has been obtained. Bend tab toward the needle seat to lessen drop, or away from seat to increase drop.

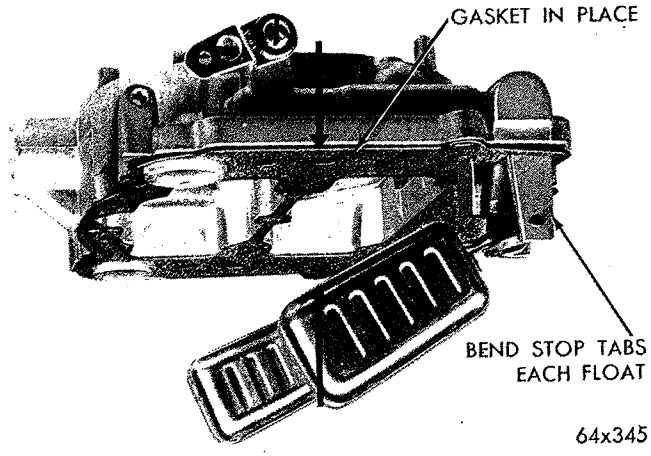


*Fig. 11—Checking Float Drop*

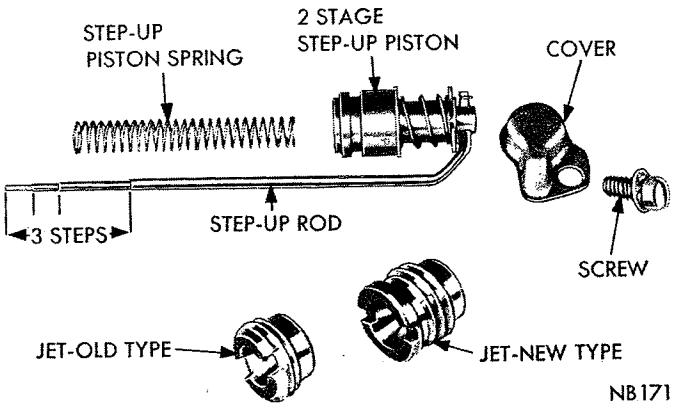


*Fig. 12—Step-Up Piston, Rod and Jet*

(2) After floats have been checked and adjusted, continue to assemble the carburetor as follows:

(3) Place accelerator pump plunger lower spring in the pump cylinder, then lower the air horn carefully down on the main body. Care must be taken to center small brass main bleed tubes so that they will pass through the holes in air horn without being damaged. **Be sure the fuel baffles on the air horn, slide down in front, (bowl side) of the float chamber baffles, or the air horn will not index correctly with the main body and can cause the floats to hang up. Be sure the leather on the plunger does not curl or wrinkle. Accelerator pump operation will be affected if this precaution is not observed.**

(4) Install 10 air horn attaching screws and tighten securely. (The two long screws should be installed in holes that are located at air cleaner mounting surface. The 1 inch screw at the front and the 1½ inch at the rear.)

The change from low speed, best fuel economy, road load mixtures to richer wide open throttle full power mixtures is now accomplished in two steps. This has made it possible to secure best low speed fuel economy without sacrificing performance in the intermediate speed range. To do this, there is a new step-up piston and spring assembly, new metering rods with three diameters, and new style primary metering jets, as shown in (Fig. 12).

(5) Slide step-up piston spring into piston cylinders, followed by step-up pistons and step-up rods. Install cover plates and attaching screws while holding the step-up pistons down in position. Tighten screws securely.

(6) Check fit of the choke valve in air horn. The valve should be evenly spaced on all sides. Loosen screws and reposition if necessary.

(7) Engage throttle connector rod with the primary throttle shaft lever, then install hairpin clip. Install clevis clip to rod and pump arm.

MyMopar.com

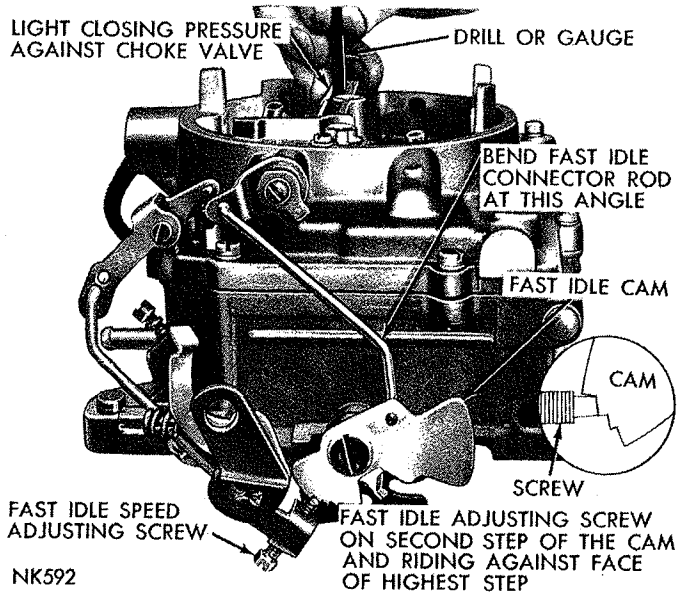


***Fig. 13—Fast Idle Cam Position Adjustment***

(8) Engage lower end of fast idle connector rod with fast idle cam, then swing in an arc to lock in cam. Slide other end of rod into the choke shaft lever and secure with hairpin clip.

### *Installing the Vacuum Diaphragm*

Inspect the diaphragm vacuum fitting to be sure that the passage is not plugged with foreign material. Leak check the diaphragm to determine if it has internal leaks. To do this, first depress the diaphragm stem, then place a finger over the vacuum fitting to seal the opening. Release the diaphragm stem. If the stem moves more than 1/16 inch in ten (10) seconds, the leakage is excessive and the assembly must be replaced. Install the diaphgram assembly on the carburetor as follows:

(1) Assemble to carburetor and tighten attaching screws securely.

(2) Install choke operating link in position between diaphragm plunger (stem) and choke lever. Install the clip to secure.

(3) Inspect rubber hose for cracks, before placing it on correct carburetor fitting. Refer to (Fig. 1). **Do not connect the vacuum hose to the diaphragm fitting until after the vacuum kick adjustment has been made. (See Carburetor Adjustments.)**

## CARBURETOR ADJUSTMENTS

The following adjustments should be made with the carburetor on the bench for ease of working, and, should be made in the following order:

### *Fast Idle Speed and Cam Position Adjustment*

The fast idle engine speed adjustment should be made on the vehicle, as described in the Fast Idle Speed Adjustment (On the Vehicle Paragraph). However, the Fast Idle Cam Position Adjustment can be made on the bench.

This adjustment is important to assure that the speeds of each cam step occur at the proper time during engine warm-up. Adjust as follows:

(1) With fast idle speed adjusting screw contacting step on fast idle cam, shown in (Fig. 13), move choke valve toward closed position with light pressure. Insert a NO. 50 drill between choke valve and the wall of the airhorn.

(2) An adjustment will be necessary if a slight drag is not obtained as the drill is being removed.

(3) If an adjustment is necessary, bend fast idle connector rod at angle, using Tool T109-213 until correct valve opening has been obtained. Refer to (Fig. 13).

### *Vacuum Kick Adjustment—(This test can be made ON or OFF the vehicle.)*

The choke diaphragm adjustment controls the fuel delivery while the engine is running. It positions the choke valve within the airhorn by action of the linkage between the choke shaft and the diaphragm. The diaphragm must be energized to measure the vacuum kick adjustment. Use either a distributor test machine with a vacuum source, or vacuum supplied by another vehicle.

(1) With engine **Not** running, open throttle valves far enough to allow choke valve to be moved to closed position.

(2) Disconnect vacuum hose from diaphragm and connect hose from vacuum supply, as shown in (Fig. 14). (A minimum of 10 inches of vacuum) will be required.

(3) **Standard Carburetors,** insert a ⅛ inch drill (manual transmissions) or a Number 35 drill (automatic transmissions). Use a Number 42 drill (automatic transmission) on the 273 cu. in. engine carburetor.

**Special CAP Carburetors,** insert a Number 44 drill (manual transmission) or a Number 40 drill (automatic transmission). Use a ⅛ inch drill on both manual and automatic transmissions on the 273 cu. in. engine carburetor, between choke valve and wall of the air horn. Refer to (Fig. 14). Apply sufficient closing pressure on choke shaft lever to provide smallest choke valve opening possible without distortion of diaphragm link. Note that cylindrical stem of diaphragm will extend as an internal spring is compressed. The spring must be fully compressed for proper measurement of the kick adjustment. (Refer to Specifications.)

(4) An adjustment will be necessary if a slight drag is not obtained as drill or gauge is being removed.

The adjustment of this opening will require the removal of the choke operating link.

MyMopar.com

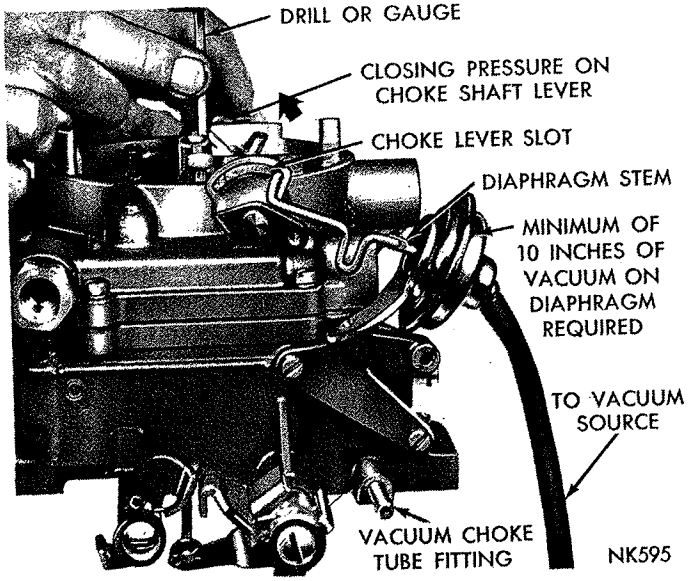


*Fig. 14—Checking the Choke Vacuum Kick Setting*

**CAUTION: Damage to the diaphragm and the choke lever slot can result, if the link is not removed for the bending operation.**

(5) Remove clip and disengage choke operating link from the choke lever, then disengage the link from the diaphragm stem. (The best bending results will be obtained by using a vise and a pair of pliers.)

(6) Bend choke operating link to provide the correct choke valve opening.

**CAUTION: A correction in the length of the link of .015 inch, will result in a change of .010 inch in the choke valve opening.**

As an example, if the choke valve opening is .010 inch in error, the correction in the link length would be .015.

A 2" micrometer will be helpful in establishing the original length of the link, as shown in (Fig. 15), before completing the adjustment.

(7) Install choke operating link and recheck choke valve opening, using a drill or gauge. Refer to (Fig. 14).

Reinstall vacuum hose to diaphragm and make the following check:

(8) With no vacuum applied to diaphragm, some

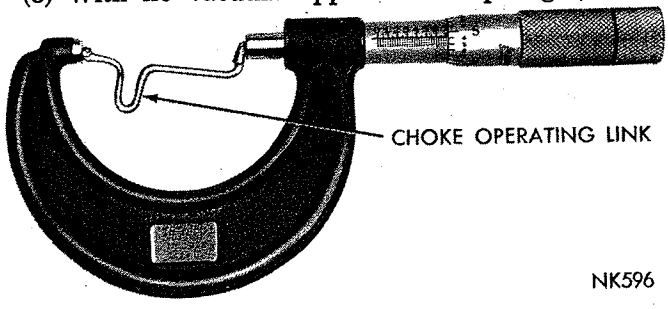


*Fig. 15—Choke Operating Link Measurement*

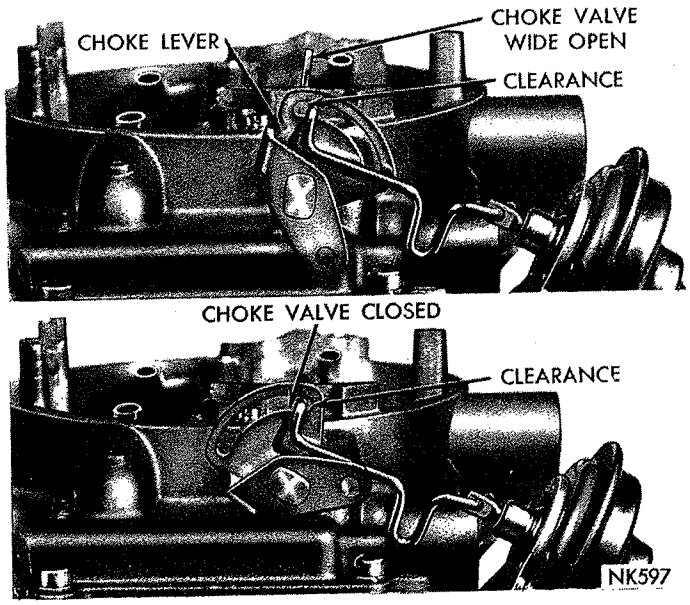


*Fig. 16—Choke Operating Link Clearances*

clearance should exist between choke operating link and choke lever slot, in both open and closed choke valve positions, as shown in (Fig. 16). **This clearance is necessary to allow the choke valve to close for starting as well as fully open after the engine reaches the normal operating temperature.**

If a clearance does not exist in both of these positions, a recheck of the operating link adjustment should be made. **Free movement of the choke valve between the closed and open positions is very necessary.**

This free movement should also exist between the kick and the open choke valve positions with the engine running. If binding does exist, the choke operating link has been improperly bent and should be corrected.

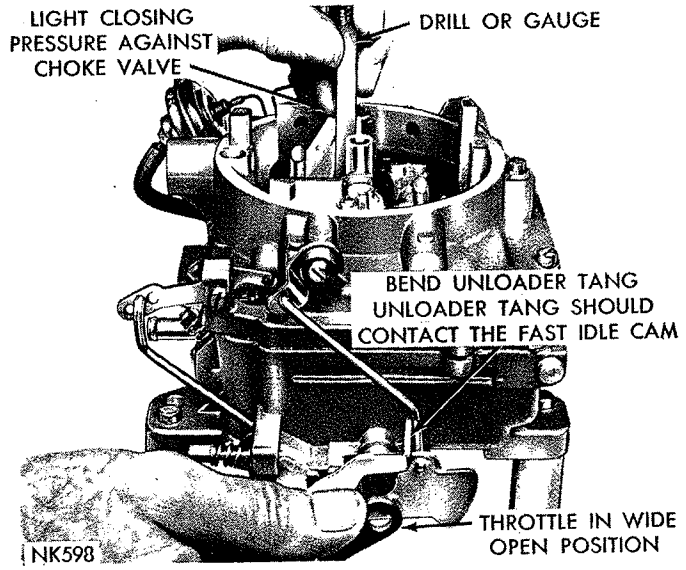


*Fig. 17—Checking Choke Unloader (Wide Open Kick)*

MyMopar.com

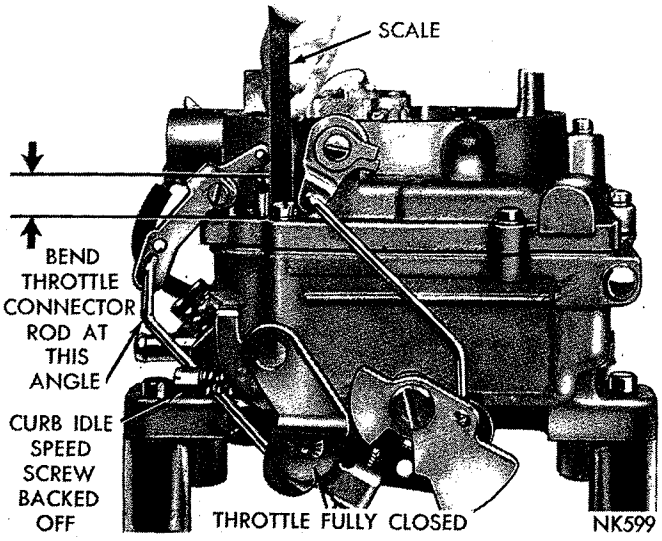


***Fig. 18—Checking the Accelerator Pump Adjustment***

### Choke Unloader Adjustment

With the throttle valves in the wide open position, it should be possible to insert Tool T109-80 (⅜ inch) gauge between the upper edge of the choke valve and the inner wall of the air horn, as shown in (Fig. 17).

If an adjustment is necessary, bend the unloader lip on the throttle shaft lever, using Tool T109-41, until correct opening has been obtained.

### Accelerator Pump Adjustment

Move the choke valve to wide open position, to release the fast idle cam. Back off the idle speed adjusting screw (curb idle) until the throttle valves are seated in the bores.

Measure the distance from the top of the air horn to the top of the plunger shaft, using a "T" scale, as shown in (Fig. 18). This distance should be 7/16 inch.

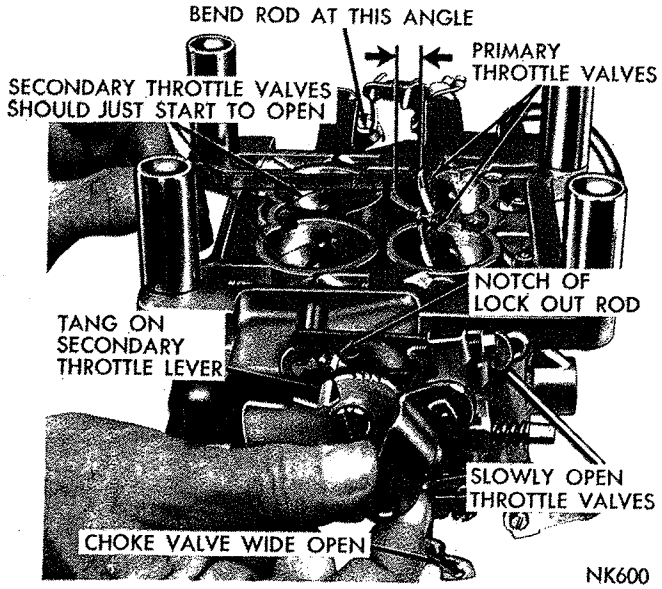


***Fig. 19—Checking the Secondary Throttle Adjustment***

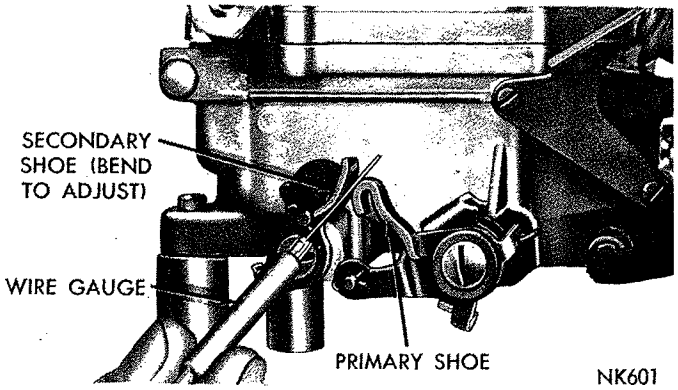


***Fig. 20—Checking Clearance Between Closing Shoes***

If an adjustment is necessary, bend the throttle connector rod at the lower angle, using Tool T109-213, until correct travel has been obtained.

### Secondary Throttle Lever Adjustment

To check the secondary throttle lever adjustment, block the choke valve in the wide open position and invert the carburetor. Slowly open the primary throttle valves until it is possible to measure 21/64 inch between the lower edge of the primary valve and the bore (opposite idle port) as shown in (Fig. 19). At this measurement, the secondary valves should just start to open. If an adjustment is necessary, bend the secondary throttle operating rod at the angle, using Tool T109-213, until correct adjustment has been obtained.

With the primary and secondary throttle valves in the tightly closed position, it should be possible to insert Tool T109-20 (.020") wire gauge, between the positive closing shoes on the secondary throttle levers, as shown in (Fig. 20).

If an adjustment is necessary, bend the shoe on the secondary throttle lever, using Tool T109-22, until correct clearance has been obtained.

### Secondary Throttle Lock Out Adjustment

Crack the throttle valves, then manually open and close the choke valve. The tang on the secondary throttle lever should freely engage in the notch of the lockout dog. Refer to (Fig. 19).

If an adjustment is necessary, bend the tang on the secondary throttle lever, until engagement has been made. Use Tool T109-22 for this operation.

After adjustments have been made, reinstall carburetor on engine, using a new gasket.

It is suggested that the carburetor be filled with clean gasoline. This will help prevent dirt that is trapped in the fuel system, from being dislodged by the free flow of fuel, as the carburetor is primed.

### Idle Speed Adjustment (Curb Idle) Standard Carburetors

To make the idle speed adjustment, the engine

MyMopar.com

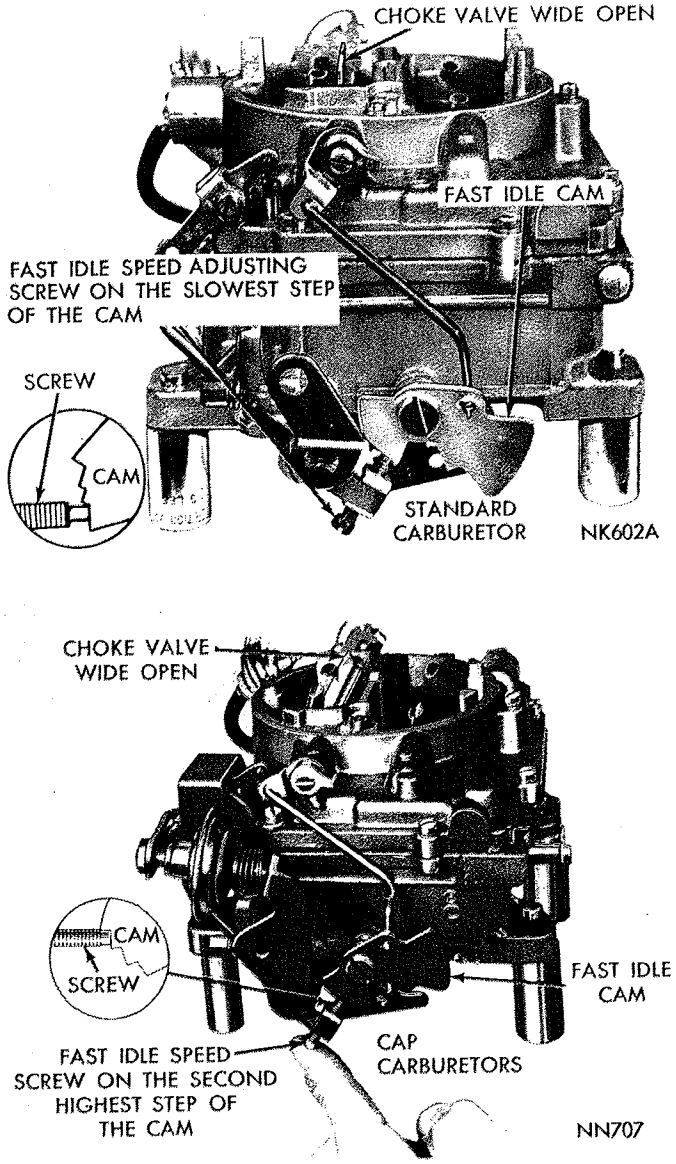


***Fig. 21—Fast Idle Speed Adjustment (on the Vehicle)***

must be thoroughly warmed up. A much more reliable idle adjustment can usually be obtained if the car has been driven a minimum of five miles. For the best results, it is recommended that a tachometer be used in this adjustment. (Before making the idle speed adjustment observe the following precautions:)

On cars equipped with the automatic transmission, loosen the nut in the slidling link of the carburetor to bellcrank rod so that the stop in the transmission will not interfere with the free movement of the carburetor throttle lever.

To make the idle speed adjustment, proceed as follows:

(1) Turn the idle speed screw **in** or **out** to obtain 500 r.p.m. (With air conditioning **On,** set the idle speed at 500 r.p.m.) Be sure the choke valve is fully open and that the fast idle adjusting screw is not contacting the fast idle cam. (Refer to Specifications.)

(2) Turn each idle mixture screw to obtain the highest r.p.m. While making the adjustment, carefully watch the tachometer and notice that the speed can be decreased by turning the screws in either direction from the setting that gave the highest r.p.m. reading.

(3) Readjust to 500 r.p.m. with the idle speed screw.

(4) Turn each idle mixture adjusting screw in the clockwise direction (leaner) until there is a slight drop in r.p.m. Now, turn each screw out, counterclockwise (richer) just enough to regain the lost r.p.m.

The procedure will assure that the idle has been set to the leanest possible mixture for smooth idle.

**This setting is very important.**

Since the correct speed was originally set using the speed screw, the speed obtained after finding the leanest smooth idle setting will probably be too fast.

(5) Readjust the speed screw to obtain correct idle speed. Repeat steps 2 and 4 above if necessary.

After the proper idle speed has been obtained, move the sliding link to the rear, against the stop, and tighten the nut securely.

### *Fast Idle Speed Adjustment (On the Vehicle)**

To set the fast idle speed on the vehicle, connect a tachometer to the vehicle, then set the curb idle speed and proceed as follows:

(1) With engine running and transmission in neutral position, open throttle slightly.

(2) **On Standard carburetors,** close the choke valve about 20 degrees, then allow throttle to close. Return choke valve to the open position. The fast idle speed adjusting screw should contact the slowest speed step on the fast idle cam (Fig. 21).

(3) **On CAP carburetors,** open the throttle until the fast idle adjusting screw can be positioned on the second highest step of the cam (Fig. 21). **The air cleaner must be installed while measuring the engine speed.**

(4) With the engine warmed up to the normal operating temperature, turn the fast idle speed adjusting screw in or out to secure 700 rpm (Standard Carburetors) or 1500 rpm (CAP Carburetors).** (Refer to Specifications.)

**Reposition the cam and throttle after every fast idle speed screw adjustment to apply normal throttle closing torque.**

****Special Note: CAP Equipped Vehicles**

Before adjusting idle and/or fast idle speeds and mixtures, make sure that the basic timing and the distributor control valve are correctly adjusted as outlined under Idle Speed Adjustment (Curb Idle) CAP Carburetors.

*After Approx. 500 Miles (If Necessary).

MyMopar.com

## DASHPOT SETTING AND ADJUSTMENT—C.A.P. CARBURETOR

### *(Manual Transmission Only)*

With the curb idle speed and mixture properly set and a tachometer installed, position the throttle lever so that the actuating tab on the lever is contacting the stem of the dashpot but not depressing it. The tachometer should reach 2000 rpm if the setting is correct. To adjust the setting if necessary, screw the dashpot in or out as required. When the desired setting is obtained, tighten the lock nut on the dashpot against the bracket.

### *Idle Speed Adjustment (Curb Idle) CAP Carburetors*

To make the idle speed adjustment on CAP carburetors, secure an accurate ignition tachometer and a Sun Electric Combustion-Vacuum Unit, Model 80, Exhaust Condenser, Model EC, and Hose 669-14 or equivalent. (The above analyzer is recommended; however, other reliable makes of analyzers in good condition may be used.) Proceed as follows:

(1) Engine running at normal operating temperature, and timing checked and set at 5° at ATDC.

(2) Air Cleaner installed.

(3) Six cylinder engines only—turn headlights on high beam position.

(4) Automatic transmissions in neutral position (not in park position).

(5) On air conditioned vehicles, turn air conditioning **off.**

(6) Connect ignition tachometer.

(7) Insert probe of the exhaust gas analyzer in the tail pipe as far as possible (2 ft. minimum distance). On dual exhaust cars use the left side tail pipe (side opposite heat valve). It is very important that the probe and connecting tubing be free of leaks to prevent erroneous readings. If a garage exhaust system is used to conduct the exhaust gases away, a plenum chamber or other means must be used to reduce the vacuum of the exhaust system to ½ inch water or less.

(8) Connect the exhaust gas analyzer, warm up and calibrate according to manufacturer's instructions.

(9) Place clamp on hose between distributor vacuum control valve and intake manifold.

(10) Set the idle speed to the specified value for the specific engine-transmission combination.

**IMPORTANT: When adjusting mixture screws to obtain the air/fuel ratio specified for CAP, do not turn the mixture screw more than 1/16 turn at a time. The combustion analyzer is so sensitive that the ratio must be changed by very small increments if accurate readings are to be obtained. The meters read in air/fuel ratio so that a higher reading indicates a leaner mixture and vice versa.**

(a) Adjust each screw 1/16 turn richer (counterclockwise) and wait 10 seconds before reading the meter.

(b) If necessary, repeat step "a" until the meter indicates a definite increase in richness (lower reading). This step is very important since the meter reverses its readings and indicates a richer mixture as the carburetor is leaned out if the carburetor is set very lean.

(c) When it has been established that the meter is indicating a lower reading (richer mixture) when the idle mixture screws are turned in the richer direction, proceed to adjust the carburetor to give 14.2 air/fuel ratio, turning the screws counterclockwise (richer) to lower the meter reading and clockwise (leaner) to increase the meter reading.

(d) If the idle speed changes as the mixture screws are turned, adjust the speed to the specified value and readjust the mixture as required so that 14.2 air/fuel ratio is obtained at the specified idle speed.

(e) If the idle is rough, the screws may be adjusted independently to achieve a smooth idle, provided the air/fuel ratio is held to the 14.2 value.

(11) Remove clamp from distributor vacuum valve hose. If idle speed changes materially check and set valve as described under "Distributor Vacuum Control Valve Adjustment."

## DISTRIBUTOR VACUUM CONTROL VALVE ADJUSTMENT

To adjust the control valve, refer to (Fig. 1) then proceed as follows:

(1) Connect a tachometer to the engine and warm engine up to the normal operating temperature.

(2) Connect a vacuum gage (0-30 in. mercury) to the distributor vacuum tube. The tee should have the same inside diameter as the distributor vacuum tube.

(3) If the carburetor is equipped with a dash pot, adjust it so that it does not contact the throttle lever at curb idle.

(4) Clamp closed the vacuum tube that connects the vacuum valve to manifold vacuum.

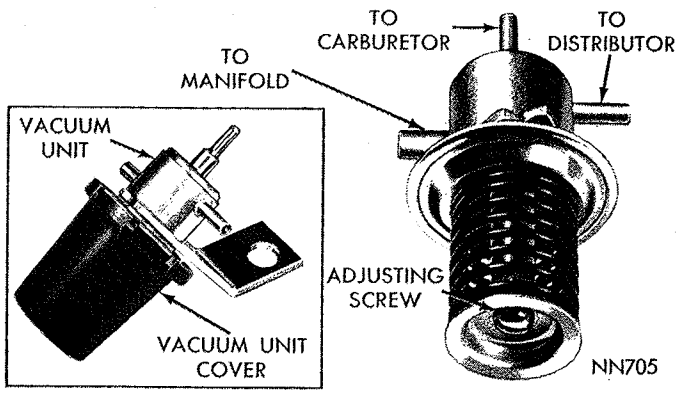


***Fig. 1—Distributor Vacuum Control Valve Adjustment***

MyMopar.com

(5) Remove the distributor vacuum tube at the distributor and clamp the tube closed.

(6) Set the basic ignition timing to manufacturers specifications (5° ATDC). The curb idle speed must be at the specified rpm before the timing is adjusted.

(7) Adjust carburetor to obtain the specified engine speed and exhaust emission level. The distributor vacuum must be below 6 in. of mercury at curb idle.

(8) Remove the clamps from the vacuum tubes and reconnect vacuum tube to the distributor. Remove vacuum valve cover (Fig. 1).

(9) Speed engine up to 2000 rpm in neutral and hold speed for approximately 5 seconds. Release throttle and observe distributor vacuum. When the throttle is released, the distributor vacuum should increase to above 16 inches of mercury and remain there for a minimum of 1 second. The distributor vacuum must fall below 6 inches of mercury within 3 seconds after the throttle is released.

(10) Adjust valve is necessary. Turning the spring end adjusting screw counterclockwise will increase the time the distributor vacuum remains above 6 inches of mercury after the throttle is released. One turn of the adjusting screw will change the valve setting by approximately ½ inch of mercury. If the valve cannot be adjusted to the specifications described in step no. 9, replace valve (Fig. 1).

(11) Replace vacuum valve cover. Reset the carburetor dash pot (if so equipped) and check valve performance as outlined in step no. 9. If the distributor vacuum does not fall below 6 inches of mercury within 4 seconds after the throttle is released, readjust or replace the dash pot.

# FUEL PUMP

## INDEX


| | Page | | Page |
|---|---|---|---|
| Service Diagnosis | 72 | Specifications | 91 |
| Servicing the Fuel Pump | 72 | Testing Fuel Pump (on car) | 73 |


## SERVICE DIAGNOSIS

| Condition | Possible Cause | Correction |
|---|---|---|
| **FUEL PUMP LEAKS—FUEL** | (a) Worn, ruptured or torn diaphragm. | (a) Install new pump. |
| | (b) Loose diaphragm mounting plates. | (b) Install new pump. |
| | (c) Loose inlet or outlet line fittings. | (c) Tighten line fittings. |
| **FUEL PUMP LEAKS—OIL** | (a) Cracked or deteriorated pull rod oil seal. | (a) Install new pump. |
| | (b) Loose rocker arm pivot pin. | (b) Install new pivot pin. |
| | (c) Loose pump mounting bolts. | (c) Tighten mounting bolts securely. |
| | (d) Faulty pump to block gasket. | (d) Install new gasket. |
| **INSUFFICIENT FUEL DELIVERY** | (a) Vent in tank filler cap restricted. (This will also cause collapsed fuel tank.) | (a) Install new cap, and inspect tank for leaks. |
| | (b) Leaks in fuel line or fittings. | (b) Tighten line fittings. |
| | (c) Dirt or restriction in fuel tank. | (c) Install new fuel filter and clean out tank. |
| | (d) Worn, ruptured, or torn diaphragm. | (d) Install new pump. |
| | (e) Frozen gas lines. | (e) Thaw lines and drain tank. |
| | (f) Improperly seating valves. | (f) Install new fuel pump. |
| | (g) Vapor lock. | (g) Install heat shield where lines or pump are near exhaust. |
| | (h) Low Pressure. | (h) Install new fuel pump. |
| | (i) Incorrect fuel pump. | (i) Install correct fuel pump. |
| | (j) Restricted fuel filter. | (j) Install new filter. |
| **FUEL PUMP NOISE** | (a) Loose mounting bolts. | (a) Tighten mounting bolts. |
| | (b) Scored or worn rocker arm. | (b) Install new fuel pump. |
| | (c) Weak or broken rocker arm spring. | (c) Install new spring. |

## SERVICE PROCEDURES

### SERVICING THE FUEL PUMP

Fuel pump Model MS-3674S shown in (Fig. 1), is used exclusively on the 170/225 cubic inch 6 cylinder engine. Model MS-3673S shown in (Fig. 2) is used on the 318 cubic inch V-8 engine and model MS-3962S is used on the 273 cu. in. engine.

MyMopar.com

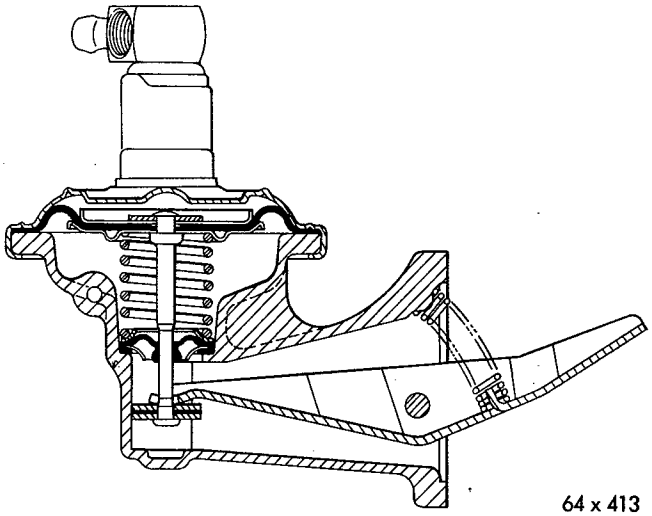


***Fig. 1—Fuel Pump Assembly (170-225 Cu. In. Engine)***

Model MS-3672S shown in (Fig. 3) is used on the 361-383-426 cubic inch engines.

The fuel pumps are driven by an eccentric cam that is cast on the camshaft in the 170/225 and 361-383-426 cubic inch engines, or by a pressed steel eccentric cam mounted on the gear end of the camshaft in the 273, 318 cubic inch engine.

As the camshaft rotates, the eccentric cam presses down on the pump rocker arm. (On the 361-383-426 cubic inch engine, a push rod operates between the camshaft and the fuel pump rocker arm.) This action lifts the pull rod and diaphragm upwards against the fuel pump main spring, thus creating a vacuum in the valve housing and opens the inlet valve and fuel is drawn into the valve housing chamber. On the return stroke the main spring forces the diaphragm to the down position, which closes the inlet valve and expels the fuel in the valve housing chamber through the outlet valve, to the fuel filter and the carburetor.

The fuel filter should be changed every 24,000 miles, to insure having an unrestricted flow of fuel at all times. **Do not attempt to clean.**

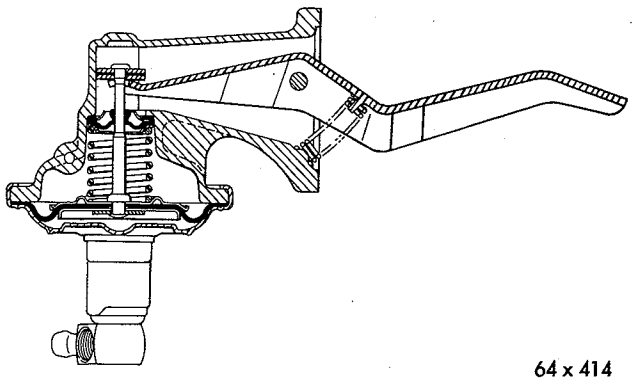


***Fig. 2—Fuel Pump Assembly (318 Cu. In. Engine)***

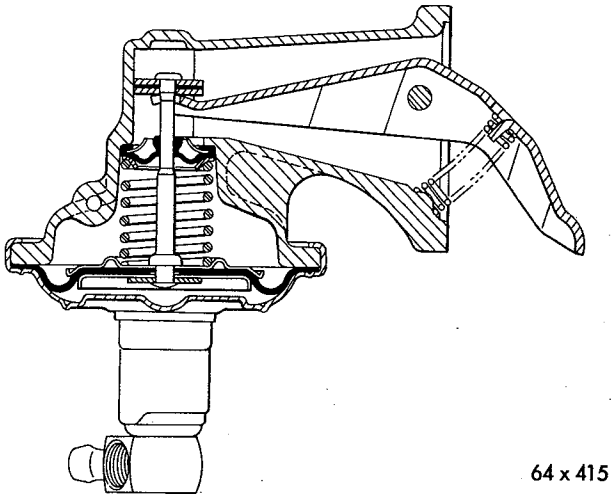


***Fig. 3—Fuel Pump Assembly (361, 383, 426 Cu. In. Engine)***

## TESTING FUEL PUMP (On Car)

If the fuel pump fails to supply fuel properly to the carburetor, the following tests should be made before removing the fuel pump from the vehicle.

### *Pressure Test*

If leakage is not apparent, test pump for pressure, as follows:

(1) Insert a "T" fitting in fuel line at carburetor, as shown in (Fig. 4).

(2) Connect a 6 inch piece of hose between "T" fitting and gauge C-3411. (The hose should not exceed 6 inches. A longer hose may collect fuel and the additional weight of fuel would be added to the pressure of pump and result in an inaccurate reading.)

(3) Vent pump for a few seconds (this relieves the air trapped in fuel chamber). If this is not done, pump will not operate at full capacity and low pressure reading will result.

(4) Connect a tachometer, then start engine and

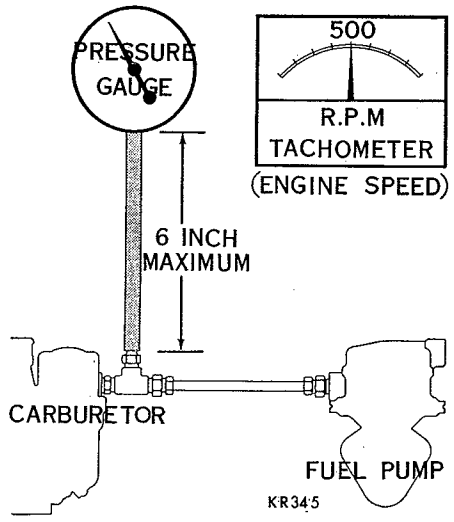


***Fig. 4—Pressure Testing the Fuel Pump***

MyMopar.com

run at 500 r.p.m. The reading should be from 3½ to 5 p.s.i. (or from 5 to 7 p.s.i., depending on pump) and remain constant or return to zero very, very, very slowly when the engine is stopped. An instant drop to zero indicates a leaky outlet valve. If pressure is too low a weak diaphragm main spring, or improper assembly of the diaphragm may be the cause. If pressure is too high, the main spring is too strong.

### *Vacuum Test*

The vacuum test should be made with the fuel line disconnected from the carburetor. (This will allow the pump to operate at full capacity, which it must do to prime a dry carburetor. The minimum reading should be at least 10 inches of vacuum at 500 r.p.m. with the fuel line disconnected at the carburetor.)

### *Volume Test*

The fuel pump should supply 1 quart of fuel in 1 minute or less at 500 r.p.m.

### *Inlet Valve Test*

To test the inlet valve, connect a vacuum gauge on the inlet fitting while the line is disconnected.

(1) Start engine or turn over with starting motor.

(2) There should be a noticeable vacuum present, not alternated by blowback.

(3) If blowback is present, the inlet valve is not seating properly and a new pump should be installed.

If fuel pump does not perform to above test requirements, fuel pump should be removed from the vehicle.

## FUEL TANK

### GENERAL INFORMATION

The fuel tank on both the conventional and station wagon models (106″ wheelbase) is located at the rear of the body, under the trunk compartment floor, as shown in (Figs. 1 or 3). The filler tube is located in the left rear quarter panel.

The fuel tank on all models (117″ wheelbase) is located at the rear of the body under the trunk compartment floor, as shown in (Fig. 4).

**If a car is to be stored for any appreciable length of time, the gasoline should be drained from the entire system in order to prevent gum formation. If the vehicle has been undercoated, be sure the tank vent tube is open. If this vent is plugged, a collapsed fuel tank will result.**

The fuel tank on all 106″ wheelbase models has an 18 gallon capacity. The fuel tank on all conventional 117″ W/B cars have a 19 gallon capacity. The fuel tank is fitted with a gauge unit, including the suction pipe, as shown in (Fig. 7). The filter on the end of the suction pipe is a replaceable unit and prevents the entry of water or foreign material. When installing a tank unit, be sure the filter is pushed down on the pipe until seated.

The fuel tank on all 119 inch wheelbase Fury models is located at the rear of the body, under the trunk compartment floor, as shown in Figure 5. In the station wagon models, the fuel tank is mounted in the left rear quarter panel beyond the wheel house, as shown in (Fig. 6)

The fuel tank on all 119 inch wheelbase Fury models has a 25 gallon capacity. The Fury 121 inch W/B station wagon capacity is 22 gallons. The filler tube on the conventional models is accessible through the center of the deck opening lower panel, while the station wagon fills at the left rear upper quarter panel. The fuel tank is fitted with a gauge unit, including the suction pipe, as shown in (Fig. 7). The filter on the end of the suction pipe is a replaceable unit and prevents the entry of water or dirt. When installing a gauge unit, be sure the filter is pushed on the end of the tube until seated.

## SERVICE PROCEDURES

### REMOVING FUEL TANK 106″ W/B SEDANS

Should it become necessary to remove a fuel tank for repair, gauge removal, or installation of a new tank refer to (Figs. 1 and 2), then proceed as follows:

(1) Drain fuel tank dry by disconnecting fuel line at pump and then connect a siphon tube. Collect drained fuel in a suitable container. Disconnect fuel line and wire lead to the gauge unit. (Right side near top of tank.)

(2) Disconnect vent tube from filler tube at the connector.

(3) Remove 3 screws that hold filler tube and gasket, to rear quarter panel.

(4) Remove 5 screws and washers that attach the filler tube seal to the floor pan, then remove end of

MyMopar.com

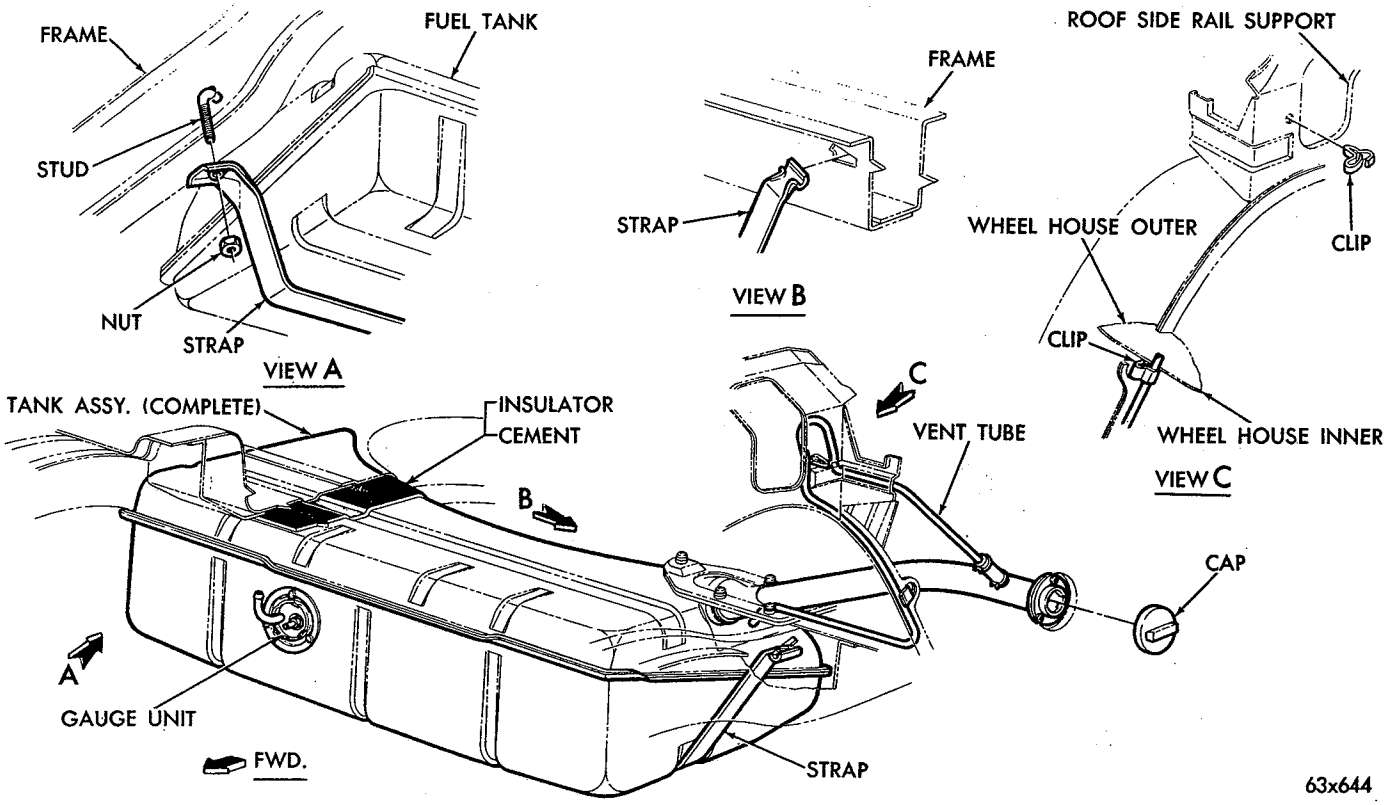


***Fig. 1—Fuel Tank Assembly (106W/B Cars)***

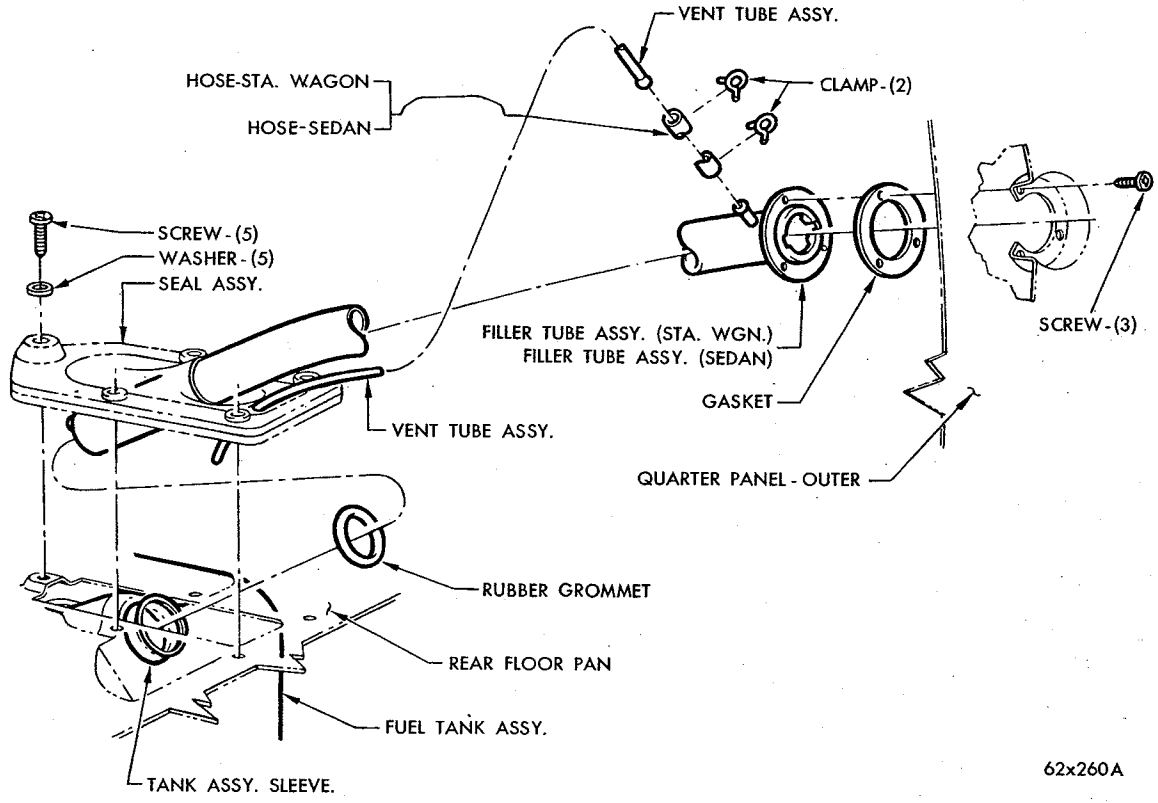


***Fig. 2—Filler Tube Assembly (106W/B Cars)***

MyMopar.com

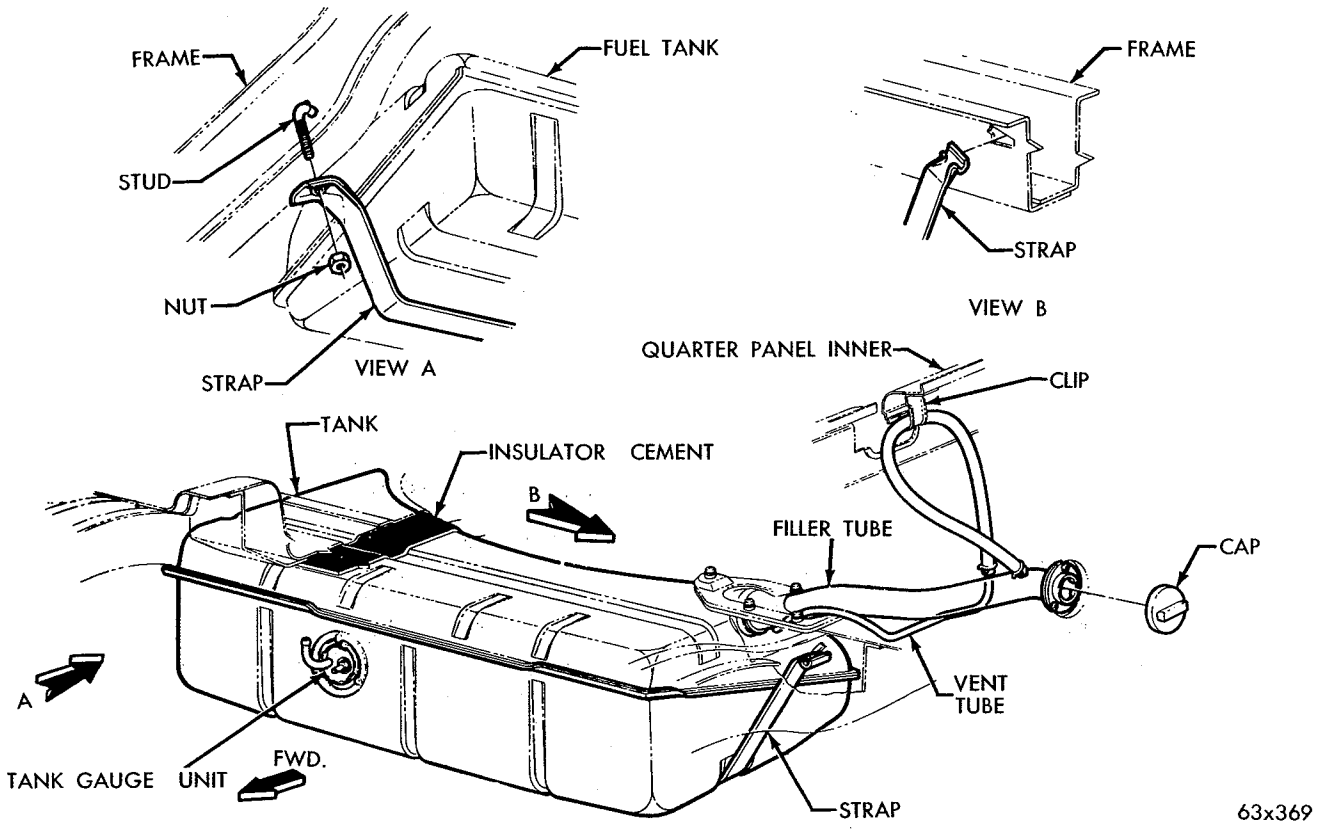


***Fig. 3—Fuel Tank Assembly (Station Wagon - 106" W/B Cars)***

vent tube from the seal.

(5) Grasp filler tube with both hands, twist tube, and at the same time, force downward into tank, until end of tube clears quarter panel. Remove gasket. (If tube is frozen in the tank, use a rubber lubricant around joint and work into grommet, after sliding dust shield out of the way.)

(6) Twist (or rotate) filler tube approximately 180 degrees, then work tube carefully out of the tank and dust shield seal. Remove tube from the inside of the trunk compartment.

(7) Remove nut that holds tank retaining strap to "J" bolt. Allow strap to drop or hang, then lower tank and remove from under car.

(8) Remove tank gauge unit, using spanner wrench C-3582. Slide gauge assembly out of the fuel tank. Discard the gasket.

(9) If necessary check operation of the fuel gauge, as described in the Electrical Section of the Manual.

## INSTALLING FUEL TANK— 106" W/B SEDANS

Before installing the fuel gauge, check the condition of the filter on the end of the suction tube. If the filter is plugged, install a new filter.

To install the fuel tank, refer to (Fig. 1), then proceed as follows:

(1) Install a new rubber grommet in tank. Insert a new gasket in fuel gauge opening recess then slide gauge into tank. Align the positioning tangs on gauge with those in the tank. Install the lockring, then tighten securely, using Tool C-3582.

(2) Slide tank under the car and up in position. Hold tank in this position, then raise the retaining strap and thread onto the "J" bolt. Install the attaching nut, and tighten securely. (Not over 60 inch-pounds.)

(3) Lubricate rubber grommet using a suitable rubber lubricant, then slide filler tube down through dust seal and into tank, for enough to clear quarter panel. Twist (or rotate) filler tube 180 degrees and align with opening in quarter panel. Install a new gasket over end of tube, then slowly withdraw tube from tank and into position against quarter panel. Align attaching screw holes; install screws and tighten securely. Slide vent tube through seal.

(4) If dust seal was disturbed during removal operation, realign and tighten attaching screws securely.

(5) Reconnect vent tube to filler tube connector.

(6) Reconnect fuel supply line and wire lead to the gauge.

(7) Refill tank and check for leaks.

## REMOVING FUEL TANK (Station Wagon) 106" W/B

Should it become necessary to remove the Station Wagon fuel tank for repair, gauge removal or the

MyMopar.com

installation of a new tank, refer to (Fig. 3), then proceed as follows:

(1) Drain fuel tank, by disconnecting fuel line at fuel pump and connect siphon tube. Collect drained fuel in a suitable container.

(2) Disconnect fuel line at tank and lead wire to fuel gauge.

(3) Remove nut that holds tank retaining strap to "J" bolt. Allow strap to hang, then using care, slightly drop righthand side of tank and with a twisting motion, work tank off the end of filler tube. (If tube is frozen in tank, use a rubber lubricant around joint and work into rubber grommet. Drop tank and remove from under car.

(4) Remove tank unit (gauge), using spanner wrench C-3582. Slide gauge assembly out of fuel tank. Discard the gasket.

If it was found necessary to remove the filler tube for repair or the installation of a new tube, proceed as follows:

(1) Remove screws that attach upper trim plate to quarter panel, to expose fuel tank vent tube clip.

(2) Reach through the access hole (directly above filler tube location) with fingers, and unhook vent hose from clip. Refer to (Fig. 3).

(3) Remove rear floor mat and raise spare tire cover (rear floor section), to expose the filler tube, vent tube and seal (filler tube to floor pan).

(4) Remove screws and washers that attach filler tube to panel and floor pan seals. Slide both seals toward center of filler tube.

(5) Remove 3 screws that attach outer end of filler tube to outer quarter panel skin.

(6) Withdraw complete assembly (tube seals, vent tube and hose) into luggage area and out of car. Discard filler tube to outer skin seal. Check condition of tube to floor pan and inner panel seals for signs of deterioration or damage. Replace questionable seals with new ones at reassembly.

## INSTALLING FUEL TANK (Station Wagon) 106" W/B

Before installing the fuel gauge assembly, check the filter on the end of the suction tube. If the filter is plugged, install a new filter.

To install the fuel tank, refer to (Fig. 3), then proceed as follows:

(1) Install a new gasket in fuel gauge opening recess, then slide gauge into tank. Align the positioning tangs on gauge with those in tank. Install lockring then tighten securely, using Tool C-3582.

(2) Slide fuel tank under car and up to meet filler tube. (Be sure a new grommet was installed in tank.) Engage tank spout with filler tube, then work tank onto tube. Hold in this position, then raise retaining strap and thread onto the "J" bolt. Install the attaching nut, and tighten to 60 inch-pounds.

(3) Reconnect fuel line and the lead wire to fuel gauge unit.

(4) Refill fuel tank and check for leaks.

If filler tube assembly was removed, it will be necessary to install the tube assembly before installing the tank. To install the filler tube assembly, refer to (Fig. 3), then proceed as follows:

(1) Place a new seal over end of filler tube and a new grommet in tank. (Be sure and check vent hose connections, as a leak at this point may allow fuel odor to enter passenger compartment.)

(2) Slide filler tube assembly (tube, seals, vent tube and hose) into position. Rotate the filler tube so that it can enter the tank.

(3) Align screw holes and install screws. Tighten securely.

(4) Position both inner panel to tube seal and tube to floor pan seal. Install attaching screws and washers and tighten securely.

(5) Reaching through the access hole, reposition the vent hose over clip.

(6) Reinstall the trim plate in the quarter panel.

(7) Reinstall the rear floor pan filler and secure with screws.

(8) Reinstall spare tire cover and floor mat.

## REMOVING FUEL TANK— 116" W/B MODELS

### *Sedans and Station Wagons*

To remove the fuel tank, refer to (Fig. 4) then proceed as follows:

(1) Disconnect rubber elbows from inner filler tube and intermediate filling vent tube.

(2) Remove bolts from intermediate vent tube and inner filler tube attaching brackets to frame members.

(3) Remove inner filler tube from tank.

(4) Cut Keystone clamp from rubber elbow connection between inner and intermediate filling vent tube and disconnect.

(5) Disconnect fuel gage sending unit and fuel line.

(6) Remove "J" bolt and strap.

(7) Lower tank and remove from under vehicle.

## FUEL TANK INSTALLATION— 116" W/B MODELS

### *Sedans and Station Wagons*

To install the fuel tank, refer to (Fig. 4), then proceed as follows:

(1) Install "T" end of strap in longitudinal.

(2) Install rubber elbow on filler vent tube. Securely fasten new Keystone clamp to avoid leaks.

(3) Raise tank into position, install "question mark" bolt in keyhole slot, and tighten to 60 in-lbs.

MyMopar.com

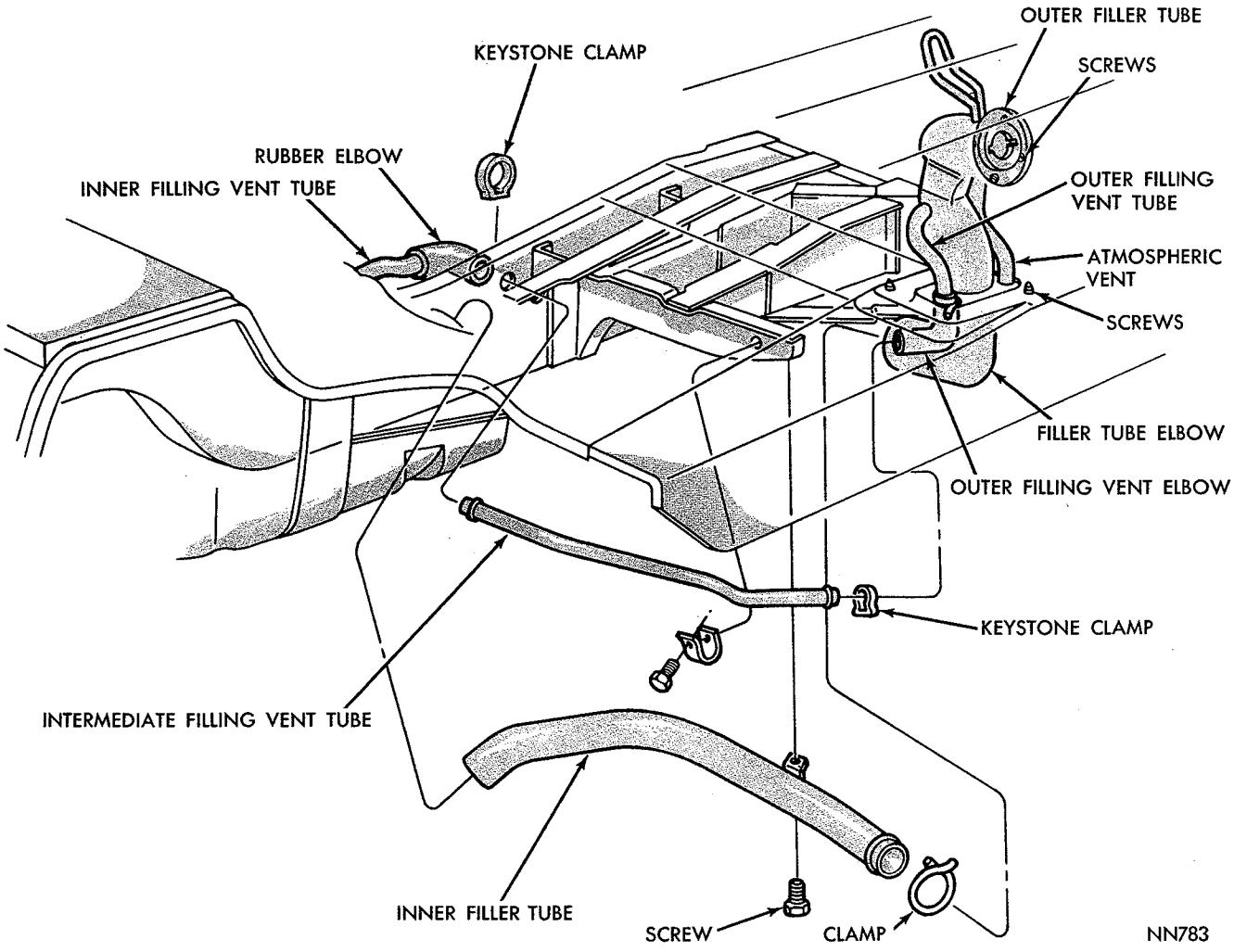


***Fig. 4—Fuel Tank Assembly (116" W/B Cars)***

(4) Slide Keystone clamp on rubber elbow and insert intermediate filler vent tube through longitudinal into rubber elbow. Securely fasten Keystone clamp (using special tool).

(5) Lubricate rubber grommet with lubriplate and install inner filler tube.

(6) Lubricate rubber elbows and slide intermediate vent tube and inner filler tube into elbows. (Be sure clamps are installed on tube before installing.) Fasten Keystone clamp to intermediate vent tube elbow and Corbin clamp to outer filler tube elbow securely to avoid leaks.

## REMOVING THE OUTER FILLER TUBE—116" W/B MODELS

### *Sedans and Station Wagons*

(1) Disconnect rubber elbows from inner filler tube and intermediate filler vent tube.

(2) Remove quarter panel to filler tube attaching screws.

(3) Remove floor pan to filler tube rubber end attaching screws.

(4) Remove outer filler tube on sedans from trunk and on station wagons from underneath the vehicle.

## INSTALLING THE FILLER TUBE—116" W/B MODELS

### *Sedans and Station Wagons (Fig. 4)*

(1) Slide rubber floor pan to outer filler tube seal on outer filler tube, outer filler vent tube, and atmospheric vent tube.

(2) Position Corbin clamp on outer filler tube and new Keystone clamp on outer filler vent tube, slide rubber elbows on tubes, and fasten clamps securely to avoid leaks.

(3) On sedans, outer filler tube and rubber elbow assembly should be installed through trunk, install attaching screws for floor pan to outer filler tube seal and fasten securely.

(4) On station wagons, outer filler tube and rubber elbow assembly should be installed from underneath through the floor pan, install attaching screws and tighten securely.

MyMopar.com

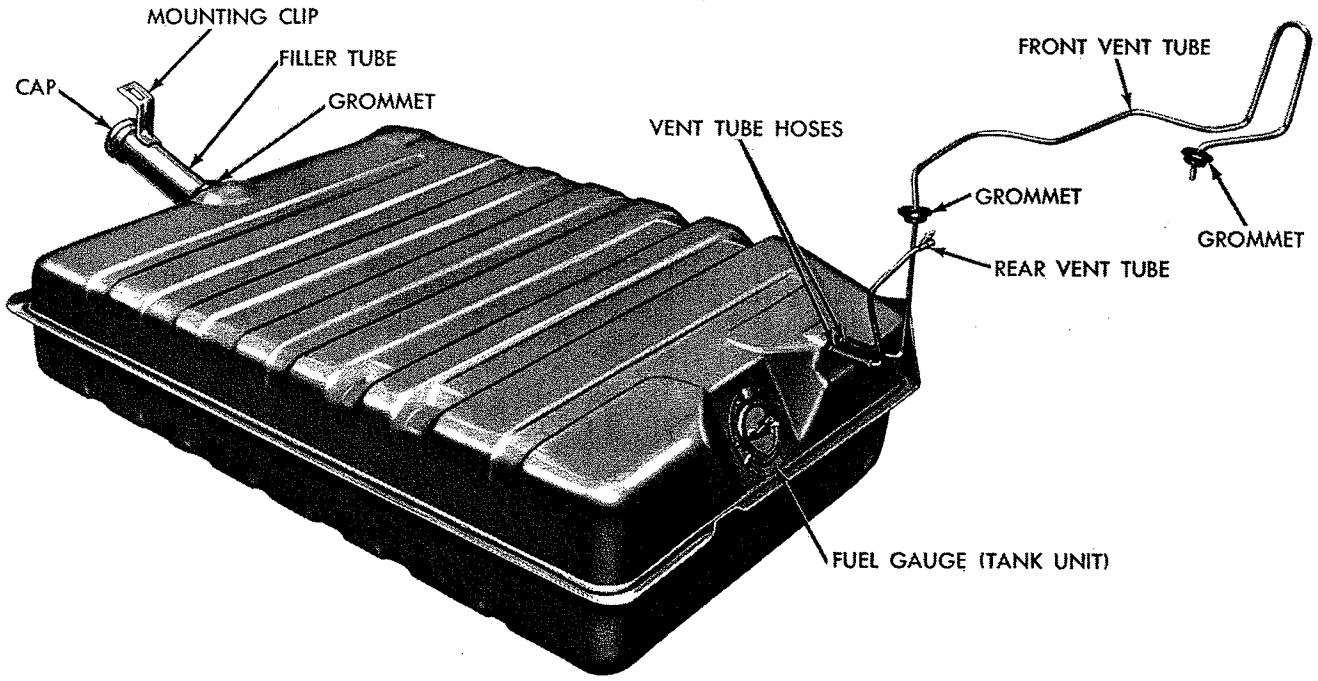


*Fig. 5—Fuel Tank Mounting (119" W/B Cars)*

## REMOVING GAUGE UNIT (Sedans) 119" W/B MODELS

The vehicle should be lifted with a frame type hoist to let the rear axle fall away from the body. Remove tank unit, using Spanner wrench Tool C-3582.

## REMOVING FUEL TANK (Sedans) 119" W/B MODELS

Should it become necessary to remove a fuel tank for repair, or installation of a new tank, refer to (Fig. 5), then proceed as follows:

**CAUTION: Be sure the Ignition Switch is turned OFF before disconnecting or connecting the gauge wire.**

(1) Drain tank into a safety can, then disconnect fuel line and wire lead to gauge unit.

(2) Remove the nuts that hold the ends of fuel tank hold down straps to frame. Lower front end of the tank far enough to disengage the filler tube from rear panel and slide out from under vehicle.

(3) Remove tank gauge unit, using spanner wrench Tool C-3582. Check the rubber grommet around filler tube. If cracked or deteriorated, install a new grommet at reassembly.

## INSTALLING GAUGE UNIT (Sedans)

Before installing the fuel gauge, check the condition of the filter on the end of the suction tube. If the filter is plugged, install a new filter unit. Position the fuel tank gauge unit in the tank, using a new gasket. Tighten securely, using Tool C-3582.

## INSTALLING FUEL TANK (Sedans) 119" W/B MODELS

Before installing the fuel gauge, check the condition of the filter on the end of the suction tube. If the filter is plugged, install a new filter.

To install the fuel tank, refer to (Fig. 5), then proceed as follows:

**CAUTION: Be sure the Ignition Switch is turned OFF before disconnecting or connecting the gauge wire.**

(1) Position fuel tank gauge unit in tank, using a new gasket. Tighten securely, using Tool C-3582.

(2) Slide fuel tank under vehicle. Raise tank far enough to engage filler spout with opening in rear panel, and locator embossments on floor pan.

(3) Push tank toward rear to fully engage the filler spout in the opening.

(4) Hold fuel tank in this position, and place hold down straps in position, feeding attaching studs through holes in end of straps. Install the nuts but do not tighten.

(5) Guide button head of studs into slots in frame and down into position. Tighten hold down strap attaching nuts securely to 60 inch-pounds.

(6) Connect lead wire to tank gauge unit and reconnect the fuel line.

(7) Refill the tank and check for leaks.

## REMOVING GAUGE UNIT (Station Wagon)

Remove the screws that attach the stone shield to

MyMopar.com

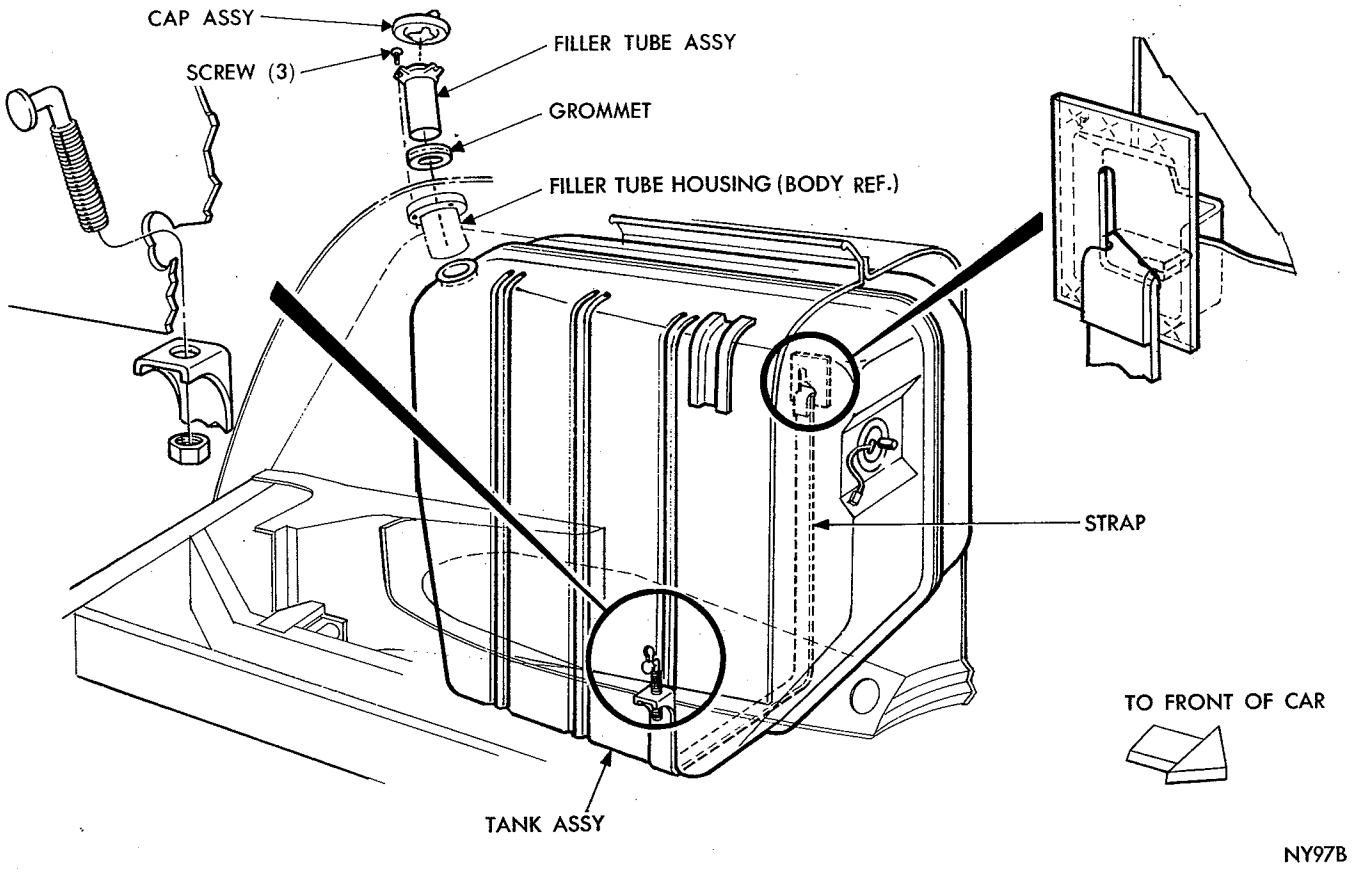


*Fig. 6—Fuel Tank Mounting (121" W/B Cars)*

the lower edge of the wheel house at the rear. Remove the shield. Loosen the tank gauge unit, using spanner wrench Tool C-3582. Slide the unit up and out of the tank.

## REMOVING FUEL TANK (Station Wagon) 121" W/B

Should it become necessary to remove the station wagon fuel tank for repair, or the installation of a new tank, refer to (Fig. 6), then proceed as follows:

**CAUTION: Be sure the Ignition Switch is turned OFF before disconnecting or connecting the gauge wire.**

(1) Drain tank into safety can, then disconnect fuel line and lead to the gauge unit under the rear fender, behind wheel house.

(2) Remove screws that attach stone shield to lower edge of wheel house at rear. Remove the shield.

(3) Remove button plug at the rear of wheel house (in front of gauge unit).

(4) Raise vehicle on a frame type hoist to allow rear axle to fall away from body. Disconnect the left shock absorber.

(5) Disconnect rear hangers on both springs and swing the axle forward, using a suitable support.

(6) Remove bolt and washer that attaches tank hold down strap to the lower support.

(7) Remove filler cap and the filler tube sleeve attaching screws. Using a suitable tool, or Tool C-3584, pull out filler tube. (In some cases, it will be necessary to lubricate rubber grommet to remove filler tube. Squirt light engine oil (SAE 10) down the side of filler tube. Work filler tube back and forth to work the oil between filler tube and grommet.) Slide sleeve out of body opening. Remove gasket from sleeve.

(8) Slide tank down and out from under quarter panel. Reach up under the quarter panel and disengage hold down strap from bracket. If strap is to be replaced, refer to (Fig. 6).

(9) Loosen tank gauge unit, using a spanner wrench Tool C-3582. Slide unit up and out of tank.

Check the condition of the rubber grommet. If cracked or deteriorated, install a new grommet at reassembly.

## INSTALLING GAUGE UNIT (Station Wagon)

Before installing the fuel gauge assembly, check the filter on the end of the suction tube. If the filter is plugged, install a new filter. Position the fuel tank gauge in the tank, using a new gasket. Tighten securely, using Tool C-3582.

MyMopar.com

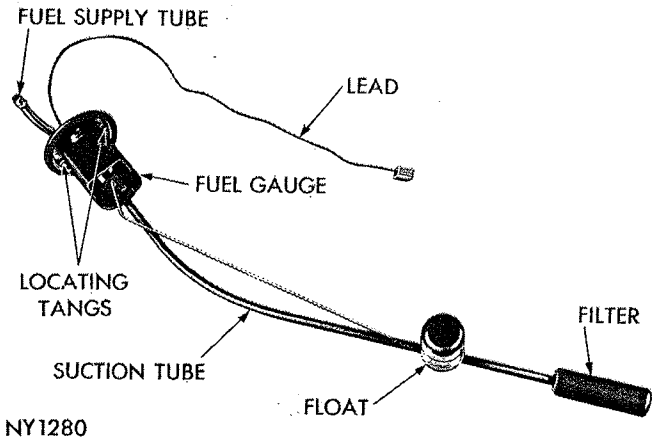


*Fig. 7—Fuel Gauge (Tank Unit)*

## INSTALLING FUEL TANK (Station Wagon) 121" W/B MODELS

Before installing the fuel gauge assembly, check the filter on the end of the suction tube. If the filter is plugged, install a new filter.

To install the fuel tank, refer to (Fig. 6), then proceed as follows:

(1) Position fuel tank gauge unit in tank, using a new gasket. Tighten securely using Tool C-3582.

(2) Slide hold down strap up under quarter panel, inserting end of strap into slot. Allow strap to hang.

(3) Install a new grommet in neck of tank. Refer to (Fig. 6).

(4) Slide tank up under quarter panel with gauge unit facing front of vehicle. Push tank up into position, with locator embossments on body aligned with those on tank. Make sure filler neck is aligned with opening in top of quarter panel. Attach with strap and bolt. Do not tighten.

(5) Place a new gasket over filler tube and down against flange. Insert filler tube down into neck of tank. Be sure anchor tab on tube is aligned with a screw hole. Install screws and tighten securely.

(6) Tighten tank hold down strap bolt securely.

(7) Install stone shield. Connect fuel line and lead to gauge unit. Reinstall the button plugs. Refill the tank and check for leaks.

(8) Swing rear axle rearward and connect the rear hangers on both springs.

(9) Connect the left rear shock absorber.

For testing the fuel gauge, refer to the "Electrical" Group 8 "Gauges."

## THROTTLE LINKAGE ADJUSTMENT

***Automatic Transmission (Fig. 1)***
***(Belvedere with 318-361-383 or 426 Cu. In. Eng.)***
***(Fury with 318-383 or 426 Cu. In. Eng.)***

(1) Apply a thin film of multi-purpose grease on both ends of accelerator shaft [1] where it turns in the bracket, nylon roller [2] where it contacts the pedal, pivot points of both upper [8] and lower [9] transmission linkage bellcranks, also the clipped ends of transmission linkage rod bearing areas [10] [11].

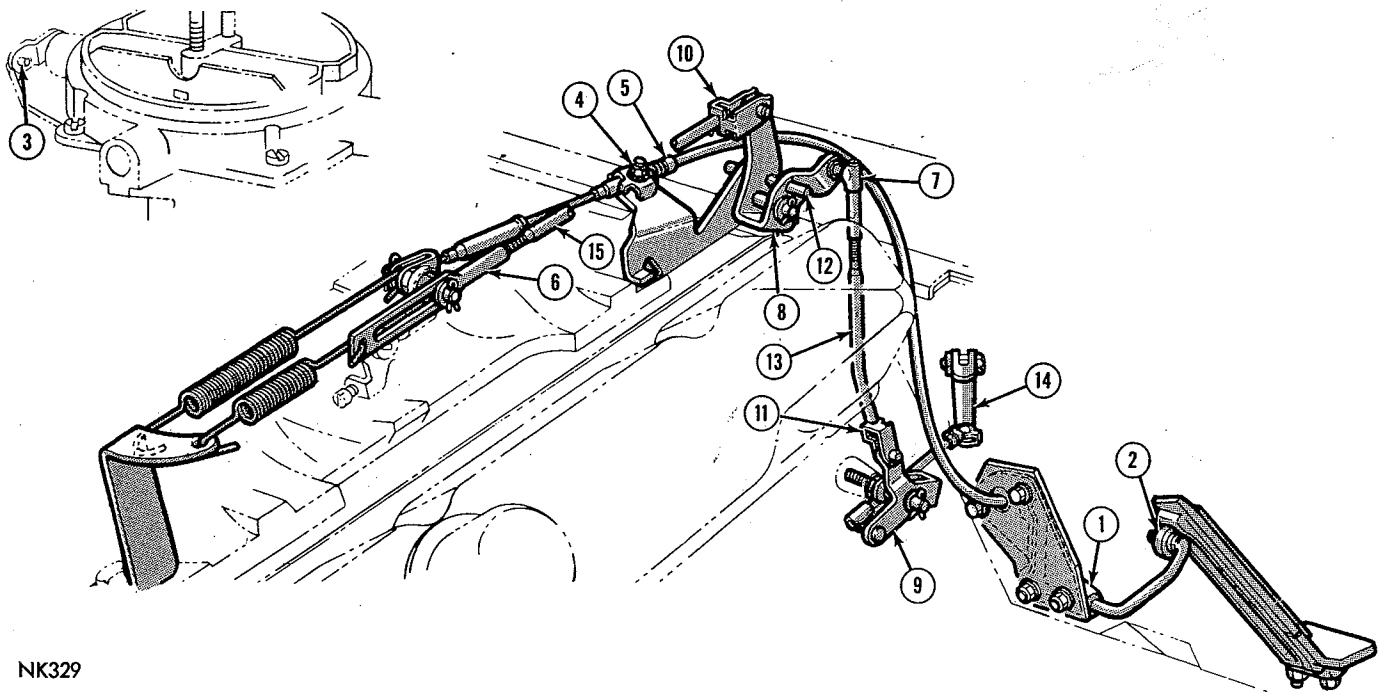


*Fig. 1—Throttle Linkage Adjustment (Belvedere with 318, 361, 383 or 426 Cu. In. Engine. Fury with 318, 383, or 426 Cu. In. Engine)*

MyMopar.com

(2) Disconnect return spring and slotted transmission rod [6] from carburetor lever pin. Disconnect transmission intermediate rod ball socket [7] from upper bellcrank ball end.

(3) Disconnect choke [3] at carburetor or block choke valve in full open position. Open throttle slightly to release fast idle cam, then return carburetor to curb idle.

(4) With a 3/16 inch diameter rod [12] placed in the holes provided in upper engine mounted bellcrank and lever [8], adjust length of intermediate transmission rod [13] by means of threaded adjustment at upper end. The ball socket [7] must line up with ball end with rod held upward against transmission stop [14].

(5) Assemble ball socket [7] to ball end and remove 3/16 inch rod [12] from upper bellcrank and lever.

(6) Hold carburetor rod [15] forward against transmission stop [14] and adjust its length by means of threaded adjustment so that rear end of slot in adjusting link [6] just contacts carburetor lever pin.

(7) Lengthen carburetor rod [15] two full turns by turning slotted link [6].

(8) Assemble slotted link [6] to the carburetor.

(9) Loosen cable clamp nut [4], then adjust position of cable housing ferrule [5] in the clamp so that all slack is removed from cable with carburetor at curb idle. To remove slack from cable, move ferrule [5] in the clamp in direction **away** from carburetor lever.

(10) Back off ferrule [5] ¼ inch. This provides ¼ inch cable slack at idle. Tighten cable clamp nut [4].

(11) Route cable so it does not interfere with the carburetor rod [15] or upper bellcrank [8] throughout full throttle linkage travel.

(12) Connect choke rod [3] or remove blocking fixture.

### *Manual Transmission (Fig. 1) (Belvedere with 318-361-383 or 426 Cu. In. Eng.) (Fury with 318-383 or 426 Cu. In. Eng.)*

(1) Apply a thin film of multi-purpose grease on both ends of accelerator shaft [1] where it turns in the bracket and nylon roller [2] where it contacts pedal.

(2) Disconnect choke [3] at carburetor or block choke valve in full open position. Open throttle slightly to release fast idle cam, then return carburetor to curb idle.

(3) Loosen cable clamp nut [4], then adjust position of cable housing ferrule [5] in the clamp so slack is removed from cable with carburetor at curb idle. To remove slack from cable move ferrule [5] in the clamp in direction **away** from the carburetor lever.

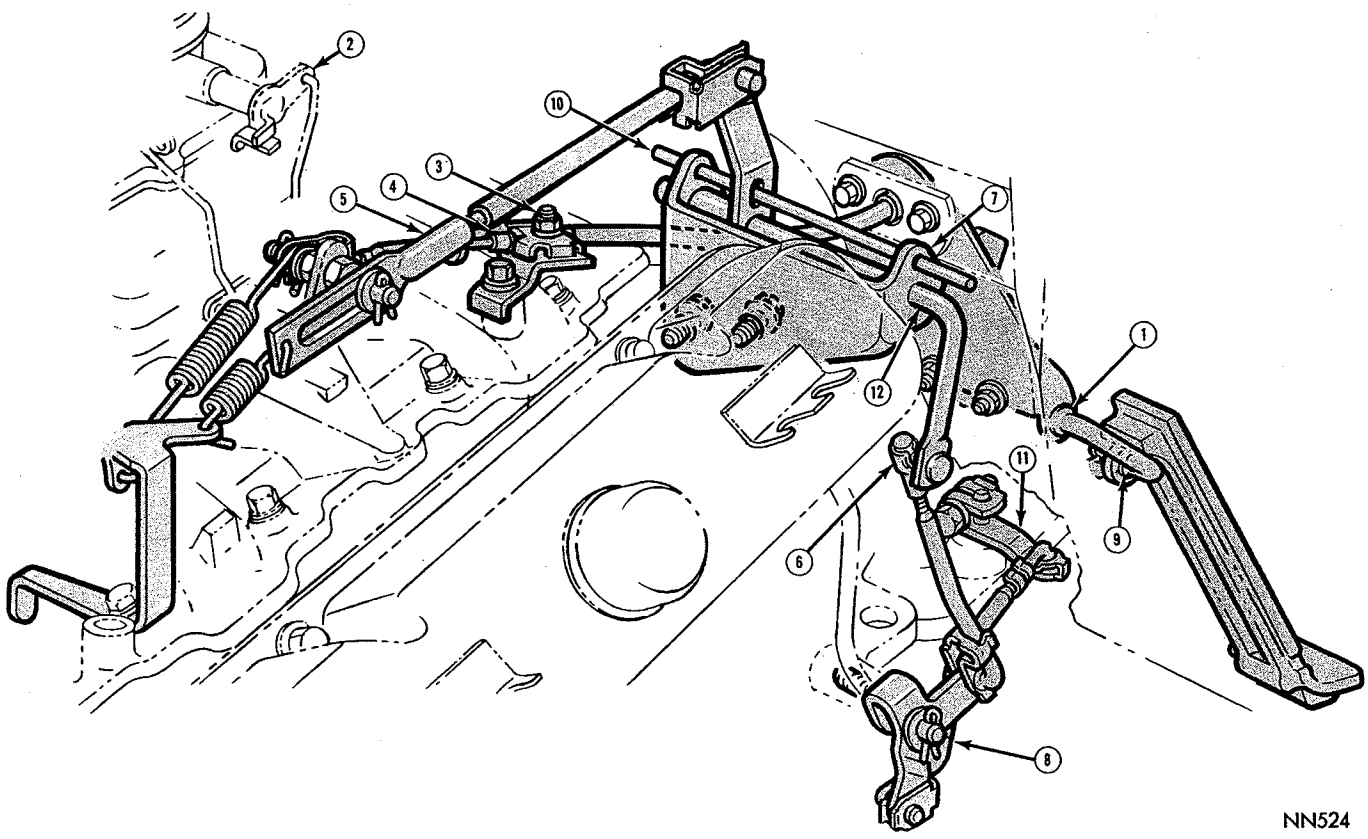


***Fig. 2—Throttle Linkage Adjustment (Belvedere with 273 Cu. In. Engine)***

MyMopar.com

(4) Back off ferrule [5] ¼ inch. This provides ¼ inch cable slack at idle. Tighten cable clamp nut [4].

(5) Connect choke rod [3] or remove blocking fixture.

### *Automatic Transmission (Fig. 2) (Belvedere with 273 Cu. In. Eng.)*

(1) Apply a thin film of multi-purpose grease on both ends of accelerator shaft [1] where it turns in the bracket, and where it turns in roller [9] also pivot points of both upper [12] and lower [8] transmission linkage bellcranks.

(2) Disconnect return spring and slotted transmission rod [5] from carburetor lever pin. Disconnect transmission intermediate rod ball socket [6] from upper bellcrank ball end.

(3) Disconnect choke [2] at carburetor or block choke valve in full open position. Open throttle slightly to release fast idle cam, then return carburetor to curb idle.

(4) With a 3/16 inch diameter rod [10] placed in the holes provided in upper engine mounted bellcrank [7] and lever, adjust length of intermediate transmission rod by means of threaded adjustment [6] at the upper end. The ball socket must line up with ball end with rod held **downward** against the transmission stop [11].

(5) Assemble ball socket [6] to ball end and remove 3/16 inch rod [10] from upper bellcrank and lever.

(6) Hold transmission lever [11] forward against its stop while adjusting length of carburetor rod [5]. While pushing rearward on rod [5] with slight effort, adjust its length by means of the threaded adjustment. Rear end of slot should contact carburetor lever pin without any forward force on pin when slotted rod is in its normal operating position against lever pin nut.

(7) Position slotted rod [5] on carburetor lever pin and secure with washer and pin. Connect return spring. Check freedom of operation by moving slotted rod [5] to full rearward position, then allow it to return slowly, making sure it returns to full forward position.

(8) Loosen cable clamp nut [3], then adjust position of cable housing ferrule [4] in the clamp so all slack is removed from cable with carburetor at curb idle. To remove slack from cable, move ferrule [4] in the clamp in direction **away** from carburetor lever.

(9) Back off ferrule [4] ¼ inch. This provides ¼ inch free play between front edge of accelerator shaft lever and the dash bracket. Tighten clamp nut [3].

(10) Route cable so it does not interfere with carburetor rod [5] or upper bellcrank [7] throughout full throttle linkage travel.

(11) Connect choke rod [2] or remove blocking fixture.

### *Manual Transmission (Fig. 2) (Belvedere with 273 Cu. In. Eng.)*

(1) Apply a thin film of multi-purpose grease on both ends of accelerator shaft [1] where it turns in the bracket, and where it turns in roller [9].

(2) Disconnect choke [2] at carburetor or block choke valve in full open position. Open throttle slight-

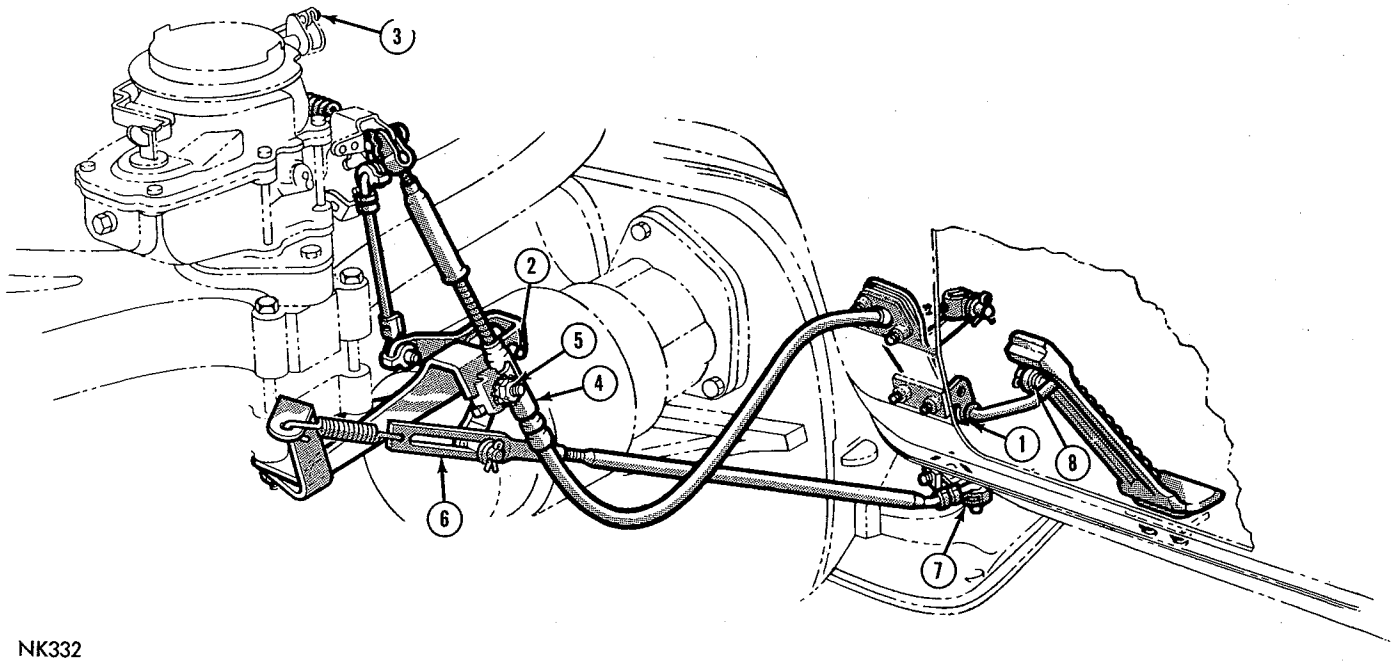


*Fig. 3—Throttle Linkage Adjustment (Belvedere—Fury with 225 Cu. In. Engine. Valiant with 225 Cu. In. Engine and A/C)*

MyMopar.com

ly to release fast idle cam, then return carburetor to curb idle.

(3) Loosen cable clamp nut [3], then adjust position of cable housing ferrule [4] in the clamp so all slack is removed from cable with carburetor at curb idle. To remove slack from cable, move ferrule [4] in the clamp in direction **away** from carburetor lever.

(4) Back off ferrule [4] ¼ inch. This provides ¼ inch free play between front edge of accelerator shaft ever and the dash bracket. Tighten cable clamp nut [3].

(5) Connect choke rod [2] or remove blocking fixture.

### *Automatic Transmission (Fig. 3) (Belvedere-Fury wih 225 Cu. In. Eng.) (Valiant with 225 Cu. In. Eng. and A . C)*

(1) Apply a thin film of mulit-purpose grease on both ends of accelerator shaft [1] where it turns in the bracket, nylon roller [8] where it contacts pedal, and the bellcrank pin [2].

(2) Disconnect return spring and slotted transmission rod [6] from bellcrank lever pin.

(3) Disconnect choke [3] at carburetor or block choke valve in full open position. Open throttle slightly to release fast idle cam, then return carburetor to curb idle.

(4) Hold transmission lever [7] forward against its stop (rod or lever must not be moved vertically while holding against stop) and adjust length of transmission rod by means of threaded adjustment [6] at the upper end. The rear end of slot should contact bellcrank lever pin without exerting any forward force.

(5) Lengthen rod by one full turn of the adjustment.

(6) Assemble slotted adjustment [6] to bellcrank lever pin and install washer and retainer pin. Assemble transmission linkage return spring in place. To check transmission linkage freedom of operation, move slotted adjuster link [6] to full rearward position, then allow it to return slowly, making sure it returns to full forward position.

(7) Loosen cable clamp nut [5], then adjust the position of cable housing ferrule [4] in the clamp so all slack is removed from cable with carburetor at curb idle. To remove slack from the cable, move ferrule [4] in the clamp in direction **away** from carburetor lever.

(8) Back off ferrule [4] ¼ inch. This provides ¼ inch cable slack at idle. Tighten cable clamp nut [5].

(9) Route cable so that it does not interfere with the transmission rod throughout its full travel.

(10) Connect choke rod [3] or remove blocking fixture.

### *Manual Transmission (Fig. 3) (Belvedere-Fury with 225 Cu. In. Eng.) (Valiant with 225 Cu. In. Eng. and A . C)*

(1) Apply a thin film of multi-purpose grease on

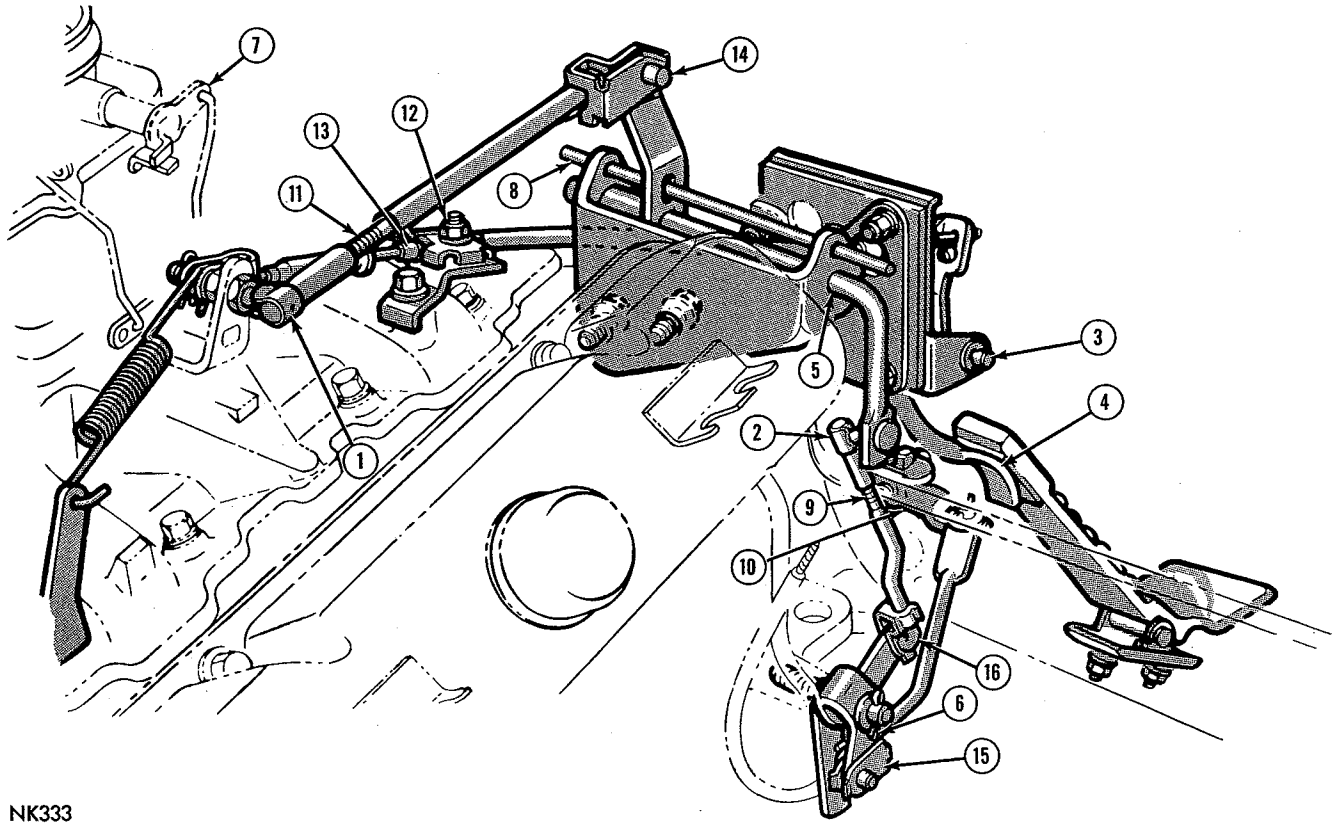


*Fig. 4—Throttle Linkage Adjustment (Valiant with 273 Cu. In. Engine)*

MyMopar.com

both ends of accelerator shaft [1] where it turns in the bracket, and nylon roller [8] where it contacts pedal.

(2) Disconnect choke [3] at carburetor or block choke valve in full open position. Open throttle slightly to release fast idle cam, then return carburetor to curb idle.

(3) Loosen cable clamp nut [5], then adjust position of cable housing ferrule [4] in the clamp so that all slack is removed from cable with carburetor at curb idle. To remove slack from cable move ferrule [4] in the clamp in direction **away** from carburetor lever.

(4) Back off ferrule [4] ¼ inch. This provides ¼ inch cable slack at idle. Tighten cable clamp nut [5].

(5) Connect choke rod [3] or remove blocking fixture.

### *Automatic Transmission (Fig. 4) (Valiant with 273 Cu. In. Eng.)*

(1) Apply a thin film of multi-purpose grease to both ends of accelerator shaft [3] where it turns in the bracket, and bottom side of pedal [4] where it contacts accelerator shaft lever. Also to pivot points of both upper [5] and lower [6] bellcranks, and clipped ends of transmission linkage rod bearing areas [14], [15] and [16].

(2) Disconnect the return spring and carburetor rod ball socket [1] from carburetor or disconnect the transmission intermediate rod ball socket [2] from the upper bellcrank ball end.

(3) Disconnect choke [7] at carburetor or block choke valve in full open position. Open throttle slightly to release fast idle cam, then return carburetor to curb idle.

(4) Insert a 6 inch long 3/16 inch diameter rod [8] in the holes provided in upper engine mounted bellcrank [5] and lever, adjust length of intermediate transmission rod by means of threaded adjustment [9] at upper end. The ball socket must line up with ball end with rod held downward against transmission stop [10].

(5) Assemble ball socket [2] to bell end and remove 3/16 inch rod [8] from upper bellcrank [5] and lever.

(6) Hold carburetor rod [11] forward against transmission stop [10] and adjust its length by means of threaded adjustment [11] so ball socket [1] lines up with ball end of carburetor lever.

(7) Lengthen carburetor rod four turns by turning ball socket [1] counterclockwise.

(8) Assemble ball socket [1] to ball end and connect return spring.

(9) Loosen cable clamp nut [12], then adjust position of cable housing ferrule [13] in the clamp so all slack is removed from cable with carburetor at curb idle. To remove slack from cable, move ferrule [13] in the clamp in direction **away** from carburetor lever.

(10) Back off ferrule [13] ¼ inch. This provides ¼ inch cable slack at idle. Tighten cable clamp nut [12].

(11) Route cable so that it does not interfere with transmission rod throughout its full travel.

(12) Connect choke rod [7] or remove blocking fixture.

### *Manual Transmission (Fig. 4) (Valiant with 273 Cu. In. Eng.)*

(1) Apply a thin film of multi-purpose grease to both ends of accelerator shaft [3] where it turns in the bracket, and bottom side of pedal [4] where it contacts accelerator shaft lever.

(2) Disconnect choke [7] at carburetor or block choke valve in full open position. Open throttle slightly to release fast idle cam, then return carburetor to curb idle.

(3) Loosen cable clamp nut [12], then adjust position of cable housing ferrule [13] in the clamp so all slack is removed from cable with carburetor at curb idle. To remove slack from cable, move ferrule [13] in the clamp in direction **away** from carburetor lever.

(4) Back off ferrule [13] ¼ inch. This provides ¼ inch cable slack at idle. Tighten cable clamp nut [12].

(5) Connect choke rod [7] or remove blocking fixture.

### *Automatic Transmission (Fig. 5) (Valiant with 170 or 225 Cu. In. Eng.)*

(1) Apply a thin film of multi-purpose grease on outside surface of carburetor lever isolator [1], and torque shaft plastic bushing [2], also torque shaft ball stud [3] and bellcrank pin [10].

(2) Disconnect transmission intermediate rod ball socket [5] from bellcrank ball end.

(3) Disconnect choke at carburetor [4] or block choke valve in full open position. Open throttle slightly to release fast idle cam, then return throttle to curb idle.

(4) Loosen lock nut [8] in transmission rod, insert a 3/16 inch diameter rod [7] approximately [4] inches long in the holes provided in transmission rod bellcrank bracket and lever assembly.

(5) Move transmission lever [9] forward against the stop and tighten transmission rod lock nut [8].

(6) Disconnect top end of accelerator pedal rod [6]. Adjust length of rod to provide a pedal angle of 111° to 113°. To increase pedal angle, increase length of rod by means of the screw adjustment. Reinstall top end of the rod [6].

(7) Remove the 3/16 inch diameter rod [7] from transmission rod bracket and lever assembly. Adjust length of transmission bellcrank to torque shaft rod by means of screw adjustment to top end. The correct rod length allows ball socket to line up with ball end when rod is held upward against transmission stop.

(8) Install ball socket on torque shaft lever ball end [5].

MyMopar.com

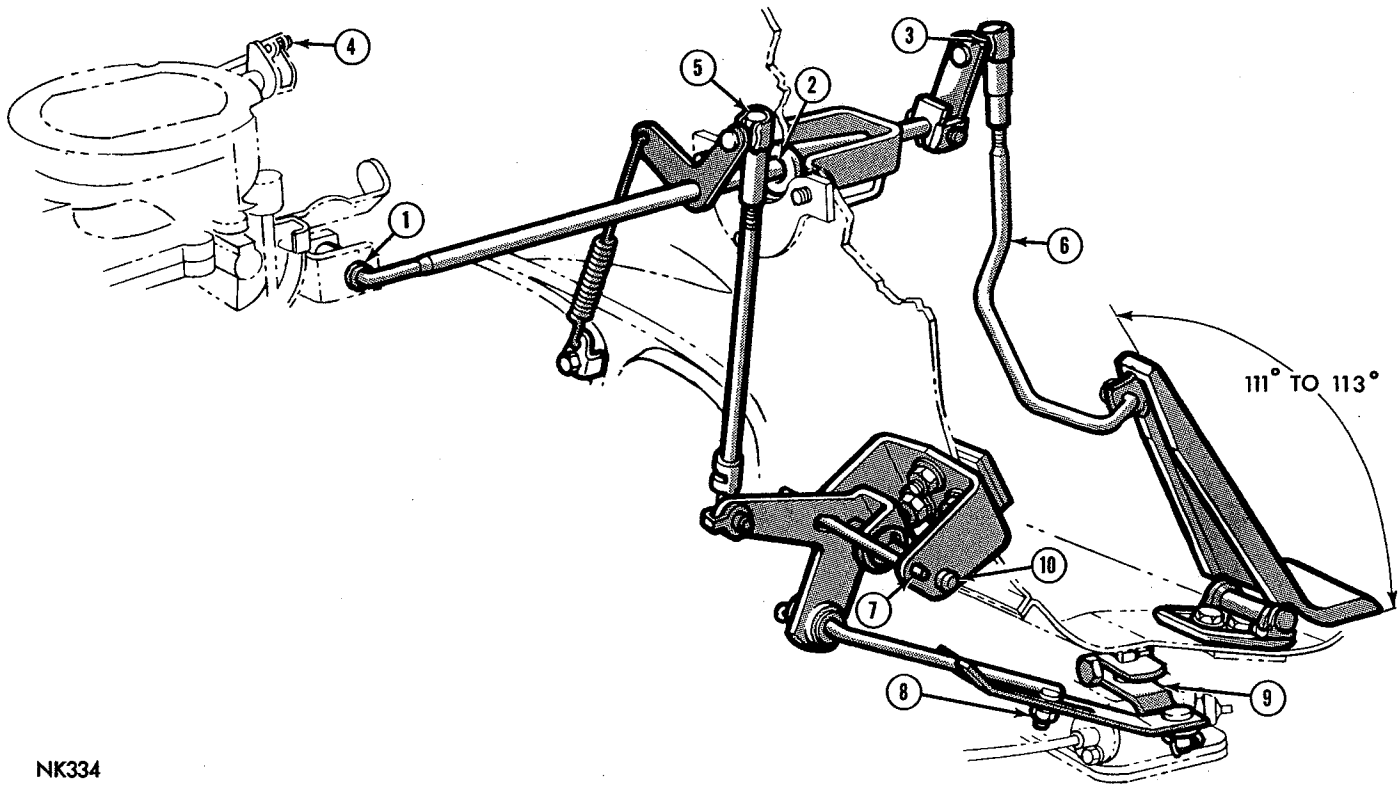


*Fig. 5—Throttle Linkage Adjustment (Valiant with 170 or 225 Cu. In. Engine)*

(9) Connect choke rod [4] or remove blocking fixture.

### *Manual Transmission (Fig. 5) (Valiant with 170 or 225 Cu. In. Eng.)*

(1) Apply a thin film of multi-purpose grease on outside surface of carburetor lever isolator [1], and torque shaft plastic bushing [2], also torque shaft ball stud [3].

(2) Disconnect choke at carburetor [4] or block choke valve in full open position. Open throttle slightly to release fast idle cam, then return throttle to curb idle.

(3) Disconnect top end of accelerator pedal rod [6]. Adjust length of rod to provide a pedal angle of 111° to 113°. To increase pedal angle, increase length of rod by means of the screw adjustment. Reinstall top end of rod [6]. Connect choke [4] rod or remove blocking fixture.

# SPECIFICATIONS

## HOLLEY

| CARBURETOR | | | | |
|---|---|---|---|---|
| Type | Single Throat Down Draft | | | |
| Model | Holley—#1920 Standard | | | |
| Manual Trans. | R-3271A R-3275A** | — | R-3279A | — |
| Automatic Trans. | — | R-3272A R-3276A** | — | R-3280A |
| Engine Displacement (Cu. In.) | 225 | 225 | 225 | 225 |
| Bore | 1-11/16" | 1-11/16" | 1-11/16" | 1-11/16" |
| Venturi | 1-5/16" | 1-5/16" | 1-5/16" | 1-5/16" |
| Main Metering Jet | | | | |
| Standard | 58 | 56 | 58 | 56 |
| One Step Lean | 56 | 54 | 56 | 54 |
| 2 Steps Lean | 54 | 52 | 54 | 52 |

MyMopar.com

| | | | | |
|---|---|---|---|---|
| ADJUSTMENTS | | | | |
| Float Setting | Use Gauge | | Use Gauge | |
| Fuel Level Height (Wet) | 27/32" | 27/32" | 27/32" | 27/32" |
| Vacuum Kick (Drill Size) | #30 | #38 | #30 | #38 |
| Cam Position Adjustment (Drill Size) | #52 | #52 | #52 | #52 |
| Choke Unloader (See Fast Idle Cam Pos. Adj.) | — | — | — | — |
| Bowl Vent Valve | 3/32" | 3/32" | 3/32" | 3/32" |
| Idle Mixture Screw (turns open) Approx. | 2 | 2 | 2 | 2 |
| Idle Speed (Curb Idle rpm) | 550* | 550* | 550* | 550* |
| Fast Idle Speed (Engine Hot and Screw on Lowest Step of Cam rpm) | | | | |
| Manual Trans. | 700 | — | 700 | — |
| Automatic Trans. | — | 700 | — | 700 |
| CHOKE | | | | |
| Control | Thermostatic Coil Spring | | | |
| Type | Well | | Well | |
| Setting | 2 Notches Rich | | 2 Notches Rich | |
| Type | Single Throat Down Draft | | | |
| Model | Holley—#1920 (CAP-Cleaner Air Package) | | | |
| Manual Trans. | R-3273A R-3277A** | — | R-3281A | — |
| Automatic Trans. | — | R-3274A R-3278A** | — | R-3282A |
| Engine Displacement (Cu. In.) | 225 | 225 | 225 | 225 |
| Bore | 1-11/16" | 1-11/16" | 1-11/16" | 1-11/16" |
| Venturi | 1-5/16" | 1-5/16" | 1-5/16" | 1-5/16" |
| Main Metering Jet | | | | |
| Standard | 58 | 56 | 58 | 56 |
| One Step Lean | 56 | 54 | 56 | 54 |
| 2 Steps Lean | 54 | 52 | 54 | 52 |
| ADJUSTMENTS | | | | |
| Float Setting | Use Gauge | | Use Gauge | |
| Fuel Level Height (Wet) | 27/32" | 27/32" | 27/32" | 27/32" |
| Vacuum Kick (Drill Size) | #28 | #38 | #28 | #38 |
| Cam Position Adjustment (Drill Size) | #41 | #52 | #41 | #52 |
| Choke Unloader (See Fast Idle Cam Pos. Adj.) | — | — | — | — |
| Bowl Vent Valve | 3/32" | 3/32" | 3/32" | 3/32" |
| Idle Mixture Screw (turns open) Approx. | 2 | 2 | 2 | 2 |
| Idle Speed (Curb Idle rpm) | 650* | 650* | 650* | 650* |
| Fast Idle Speed (Engine Hot and Screw on 2nd Highest Step of Cam rpm) | | | | |
| Manual Trans. | 1550 | — | 1550 | — |
| Automatic Trans. | — | 1550 | — | 1550 |
| CHOKE | | | | |
| Control | Thermostatic Coil Spring | | | |
| Type | Well | | Well | |
| Setting | 2 Notches Rich | | 2 Notches Rich | |

**With Air Conditioning
*With Headlights ON

## BBS CARBURETOR

| | Manual Trans. | Auto. Trans. | Manual Trans. | Auto. Trans. | |
|---|---|---|---|---|---|
| Type Ball and Ball Single Throat | Standard | | CAP—Cleaner Air Package | | Taxi |
| Model | BBS-4099S BBS-4103S* | BBS-4100S BBS-4104S* | BBS-4101S BBS-4105S* | BBS-4102S BBS-4106S* | BBS-4173S BBS-4173S* |
| Engine Displacement (Cu. In.) | 170 | 170 | 170 | 170 | 225 |
| Bore | 1-9/16" | 1-11/16" | 1-9/16" | 1-11/16" | 1-9/16" |
| Venturi | 1-1/4" | 1-11/32" | 1-1/4" | 1-11/32" | 1-1/4" |

MyMopar.com

| | | | | | |
|---|---|---|---|---|---|
| Main Metering Jet | | | | | |
| Standard | #120-267S | #120-293S | #120-267S | #120-293S | #120-209S |
| One Step Lean | #120-264S | #120-277S | #120-264S | #120-277S | #120-211S |
| Two Steps Lean | #120-265S | #120-263S | #120-265S | #120-263S | #120-210S |
| Step-Up Wire (Standard) | 75-1593 | 7-1591 | 75-1593 | 75-1634 | 75-1208 |
| Diameter | (.026") | (.032") | (.026") | (.034") | (.023") |
| ADJUSTMENTS | | | | | |
| Float Setting | 1/4" | 1/4" | 1/4" | 1/4" | 9/32" |
| Choke Unloader | 3/16" | 3/16" | 3/16" | 3/16" | 3/16" |
| Fast Idle Cam Position | #48 | #48 | #48 | #48 | #48 |
| Vacuum Kick (drill size) | #22 | #35 | #22 | #28 | #22 |
| Bowl Vent Valve Setting (from under side of valve to air horn) | .060" | .060" | .060" | .060" | .060" |
| Idle Mixture Screw (turns open) | 1-2 | 1-2 | 1-2 | 1-2 | 1-2 |
| Idle Speed R.P.M. (curb idle)** | 550 | 550 | 700 | 650 | 550 |
| Fast Idle Speed (r.p.m.) | 700† | 700† | 1550† | 1550† | 700† |
| CHOKE | | | | | |
| Control | | | Thermostatic Coil Spring | | |
| Type | Well | | Well | | Well |
| Setting | 2 Notches Rich | | 2 Notches Rich | | 2 Notches Rich |

†AfterApprox. 500 miles (if necessary)
*When equipped with Air Conditioning
**With Headlights ON and Air Conditioning ON (if so equipped)

## BALL AND BALL BBD SERIES CARBURETORS (1 ¼")

| | STANDARD | | CAP | |
|---|---|---|---|---|
| Type | Ball and Ball Dual Downdraft | | Ball and Ball Dual Downdraft | |
| Model | 273 Cu. In. | | 273-Cu. In. | |
| Manual Transmission | BBD-4113S | — | BBD-4115S | — |
| Automatic Transmission | — | BBD-4114S | — | BBD-4116S |
| Bore | 1-7/16 | 1-7/16 | 1-7/16 | 1-7/16 |
| Venturi | 1-1/16 | 1-1/16 | 1-1/16 | 1-1/16 |
| Main Metering Jet | | | | |
| Standard | 120-294S | 120-294S | 120-310S | 120-310S |
| One Step Lean | 120-297S | 120-297S | 120-294S | 120-294S |
| Two Steps Lean | 120-298S | 120-298S | 120-297S | 120-297S |
| Step-Up Wire | 75-1734 | 75-1736 | 75-1641 | 75-1727 |
| Diameters (2 stage) | .026 × .021 | .027 × .021 | .028 × .025 | .029 × .025 |
| ADJUSTMENTS | | | | |
| Float Setting (at center of floats) | 1/4" | 1/4" | 1/4" | 1/4" |
| Bowl Vent Valve (throttle closed) | .060" | .060" | None | None |
| Choke Unloader | 1/4" | 1/4" | 1/4" | 1/4" |
| Idle Mixture Screws (turns open) | 1 | 1 | 2 | 2 |
| Idle Speed R.P.M. (curb idle) | 500 | 500 | 700 | 650 |
| (Air Conditioning ON) | 500 | 500 | As above | A/C OFF |
| Vacuum Kick Adjustment (Drill Size) | #16 (.177) | #30 (.128) | #16 (.177) | #30 (.128) |
| Fast Idle Cam Position (Drill Size) | #41 (.095) | #41 (.095) | #41 (.095) | #41 (.095) |
| Fast Idle Speed R.P.M. | 700 | 700 | 1400 | 1500 |
| CHOKE | | | | |
| Control | Thermostatic Coil Spring | | | |
| Type | WELL | WELL | WELL | WELL |
| Setting | 2 NOTCHES RICH | | ON INDEX | |

*After Approx. 500 Miles (if necessary)

## STROMBERG WW3 SERIES CARBURETOR (1 ¼")

| | | | | |
|---|---|---|---|---|
| Type | Stromberg Dual Throat Downdraft | | | |
| Engine Displacement (Cu. In.) | 318 | | 318 | |
| Model | STANDARD | | CAP—CLEANER AIR PACKAGE | |
| Manual Transmission | WW3-258 | | WW3-260 | |
| Automatic Transmission | | WW3-259 | | WW3-261 |
| Bore | 1-7/16 | 1-7/16 | 1-7/16 | 1-7/16 |

MyMopar.com

| | | | | |
|---|---|---|---|---|
| Venturi | 1-3/16 | 1-3/16 | 1-1/8 | 1-3/16 |
| Main Metering Jet | | | | |
| Standard (388539) | .055" | .054" | .052" | .054" |
| 1 Size Lean (388539) | .053" | .052" | .050" | .052" |
| 2 Sizes Lean (388539) | .051" | .050" | .048" | .050" |
| Power Jet (2 Stage) | .028 × .075 | .025 × .075 | .031 × .067 | .025 × .075 |
| ADJUSTMENTS | | | | |
| Idle Mixture Screws (turns open) | 1-1/4 | 1-1/4 | 1/2 | 1/2 |
| Idle Speed (curb idle) | 500 | 500 | 650 | 600 |
| Air Conditioning ON | 500 | 500 | As above | A/C off |
| Fast Idle Speed | 700 | 700 | 1450 | 1600 |
| Fast Idle Cam Position | #28 | #28 | #28 | #28 |
| Bowl Vent (closed throttle) | .060" | .060" | .050" | .050" |
| Vacuum Kick Adjustment (Drill Size) | G | D | G | D |
| Float Setting | 7/32" | 7/32" | 7/32" | 7/32" |
| Choke Unloader | 5/16" | 5/16" | 5/16" | 5/16" |
| CHOKE | | | | |
| Control | | **Thermostatic Coil Spring** | | |
| Type | Well | Well | Well | Well |
| Setting | 2 Notches Rich | 2 Notches Rich | On Index | On Index |

## BBD SERIES CARBURETOR

| | Manual Transmission | Automatic Transmission | Manual Transmission | Automatic Transmission |
|---|---|---|---|---|
| | **Standard** | | **CAP—Cleaner Air Package** | |
| Type | Dual Throat Downdraft | Dual Throat Downdraft | Dual Throat Downdraft | Dual Throat Downdraft |
| Model | BBD-4125S | BBD-4127S | BBD-4126S | BBD-4128S |
| Engine Displacement (cu. in.) | 361-383 | 361-383 | 361-383 | 361 |
| Bore | 1-9/16" | 1-9/16" | 1-9/16" | 1-9/16" |
| Venturi | 1-5/16" | 1-5/16" | 1-5/16" | 1-5/16" |
| Main Metering Jet | | | | |
| Standard | 120-304S | 120-304S | 120-311S | 120-311S |
| One Step Lean | 120-296S | 120-296S | — | — |
| Two Steps Lean | 120-302S | 120-302S | — | — |
| One Step Rich | 120-306S | 120-306S | — | — |
| Step-Up Wire (Standard) | 75-1652 | 75-1652 | 75-1738 | 75-1738 |
| Diameter (2 Stage) | .035 × .027" | .035 × .027" | .038 × .034" | .038 × .034" |
| ADJUSTMENTS | | | | |
| Accelerator Pump Setting | 1" ± 1/64" | 1" ± 1/64" | 1" ± 1/64" | 1" ± 1/64" |
| Float Setting (at Center of Floats) | 5/16" | 5/16" | 5/16" | 5/16" |
| Vacuum Kick Adjustment | #15 | #26 | #15 | #26 |
| Fast Idle Cam Position Adjustment | #30 | #30 | #30 | #30 |
| Bowl Vent Valve (at curb idle) | 1/16" | 1/16" | 1/16" | 1/16" |
| Choke Unloader | 1/4" | 1/4" | 1/4" | 1/4" |
| Idle Mixture Screws (Turns Open) | 1 | 1 | 1 | 1 |
| Idle Speed RPM (Curb Idle) | 500 | 500 | 650 | 600 |
| Air Conditioning ON | 500 | 500 | 650 | 600 |
| Fast Idle Speed RPM | 700* | 700* | 1600* | 1400* |
| CHOKE | | | | |
| Type | Well | Well | Well | Well |
| Control | Thermostatic Coil Spring | Thermostatic Coil Spring | Thermostatic Coil Spring | Thermostatic Coil Spring |
| Setting | 2 Notches Rich | 2 Notches Rich | 2 Notches Rich | 2 Notches Rich |

*After Approx. 500 Miles (If Necessary)

MyMopar.com

## STROMBERG WWC3 SERIES CARBURETOR (1½")

| | Automatic Transmission | CAP Automatic Transmission |
|---|---|---|
| Type | Dual Throat Downdraft | Dual Throat Downdraft |
| Model | WWC3-262 | WWC3-263 |
| Engine Displacement (cu. in.) | .383 | .383 |
| Bore | 1-9/16" | 1-9/16" |
| Venturi | 1-5/16" | 1-5/16" |
| Main Metering Jet (Standard) (#389323) | .065" | .064" |
| (One Step Lean) (#389323) | .063" | .062" |
| (Two Steps Lean) (#389323) | .061" | .060" |
| Power Jet | .031 × .086" | .031 × .086" |
| ADJUSTMENTS | | |
| Idle Mixture (Both Screws) | 1-1/2 Turns Open | 1-1/2 Turns Open |
| Idle Speed (rpm) | 500 | 600 |
| (with Air Conditioning ON) | 500 | |
| Fast Idle Speed (rpm) | 700 | 1300 |
| Fast Idle Cam Position Adjustment (drill size) | #38 | #38 |
| Accelerator Pump Travel (throttle fully closed) | 7/16" | 7/16" |
| Bowl Vent Valve (throttle at curb idle) | .040" | .020" |
| Vacuum Kick (drill size) | #28 | #22 |
| Float Setting | 5/32" | 5/32" |
| Unloader Adjustment (wide open kick) | 15/64" | 15/64" |
| CHOKE | | |
| Type | Well Type | Well Type |
| Control | Thermostatic Coil Spring | Thermostatic Coil Spring |
| Setting | 2 Notch Rich | ON |

## AFB CARBURETORS

| STANDARD | Manual Transmission | Automatic Transmission | Manual Transmission | Automatic Transmission |
|---|---|---|---|---|
| Type | | | 4 Barrel Downdraft | |
| Model | AFB-4119S | AFB-4120S | AFB-4130S | AFB-4131S |
| Engine Displacement (Cu. In.) | 273 | 273 | 383-426 | 383-426 |
| THROTTLE BORE | | | | |
| Primary | 1-7/16" | 1-7/16" | 1-7/16" | 1-7/16" |
| Secondary | 1-9/16" | 1-9/16" | 1-9/16" | 1-9/16" |
| MAIN VENTURI | | | | |
| Primary | 1-1/16" | 1-1/16" | 1-3/16" | 1-3/16" |
| Secondary | 1-1/4" | 1-1/4" | 1-5/16" | 1-5/16" |
| MAIN JET | | | | |
| Primary | .089" | .089" | .089" | .089" |
| Secondary | .073" | .073" | .0689" | .0689" |
| LOW SPEED JET | | | | |
| Primary | #66-.033" | #66-.033" | #65-.035" | #65-.035" |
| SET-UP ROD (2 Stage) | | | | |
| Standard | 16-403 | 16-405 | 16-404 | 16-404 |
| 1 Size Lean | | | | |
| 2 Sizes Lean | | | | |
| ADJUSTMENTS | | | | |
| Accelerator Pump (top of plunger to air horn) | 7/16" | 7/16" | 7/16" | 7/16" |
| Fast Idle Cam Position (drill size) | #50 | #50 | #50 | #50 |
| Choke Unloader | 7/32" | 7/32" | 3/8" | 3/8" |
| Vacuum Kick (drill size) | 1/8" | #42 | 1/8" | #35 |
| Fast Idle Speed (r.p.m.) | 625* | 700* | 700* | 700* |
| Idle Speed (r.p.m.) | 600 | 600 | 500 | 500 |
| With air conditioning ON) | 600 | 600 | 500 | 500 |
| Secondary Throttle Lever Adj. | 21/64" | 21/64" | 21/64" | 21/64" |
| Secondary Throttle Lockout Adj. | .020" | .020" | .020" | .020" |
| Float Setting | 7/32" | 7/32" | 7/32" | 7/32" |
| Float Drop | 3/4" | 3/4" | 3/4" | 3/4" |
| Idle Mixture (both screws open) | 1-2 Turns | 1-2 Turns | 1-2 Turns | 1-2 Turns |

MyMopar.com

| | | | | | | |
|---|---|---|---|---|---|---|
| CHOKE | | | | | | |
| Control | Well | Well | Well | Well | | |
| Type | Coil Spring | Coil Spring | Coil Spring | Coil Spring | | |
| Setting | 2 Notches Rich | 2 Notches Rich | 2 Notches Rich | 2 Notches Rich | | |

| CAP—Cleaner Air Package | Manual Trans-mission | Automatic Trans-mission | Manual Trans-mission | Automatic Trans-mission | Manual Trans-mission | Automatic Trans-mission |
|---|---|---|---|---|---|---|
| Type | | | 4 Barrel Downdraft | | | |
| Model | AFB-4121S | AFB-4122S | AFB-4132S | AFB-4133S | AFB-4136S | AFB-4137S |
| Engine Displacement (Cu. In.) | 273 | 273 | 383 | 383 | 383, 426 | 383, 426 |
| THROTTLE BORE | | | | | | |
| Primary | 1-7/16" | 1-7/16" | 1-7/16" | 1-7/16" | 1-7/16" | 1-7/16" |
| Secondary | 1-9/16" | 1-9/16" | 1-9/16" | 1-9/16" | 1-9/16" | 1-9/16" |
| MAIN VENTURI | | | | | | |
| Primary | 1-1/16" | 1-1/16" | 1-1/16" | 1-1/16" | 1-1/16" | 1-1/16" |
| Secondary | 1-1/4" | 1-1/4" | 1-1/4" | 1-1/4" | 1-1/4" | 1-1/4" |
| MAIN JET | | | | | | |
| Primary | .089" | .089" | .089" | .089" | .089" | .089" |
| Secondary | .073" | .073" | .082" | .082" | .082" | .082" |
| LOW SPEED JET | | | | | | |
| Primary | #65-.035" | #66-.033" | #65-.035" | #66-.033" | #65-.035" | #66-.033" |
| SET-UP ROD (2 Stage) | | | | | | |
| Standard | 16-408 | 16-409 | 16-407 | 16-406 | 16-407 | 16-406 |
| 1 Size Lean | | | | | | |
| 2 Sizes Lean | | | | | | |
| ADJUSTMENTS | | | | | | |
| Accelerator Pump (top of plunger to air horn) | 7/16" | 7/16" | 7/16" | 7/16" | 7/16" | 7/16" |
| Fast Idle Cam Position (drill size) | #50 | #50 | #50 | #50 | #50 | #50 |
| Choke Unloader | 7/32" | 7/32" | 7/32" | 7/32" | 7/32" | 7/32" |
| Vacuum Kick (drill size) | 1/8" | 1/8" | #44 | #40 | #44 | #40 |
| Fast Idle Speed (r.p.m.) | 1500* | 1600* | 1500* | 1500* | 1500* | 1500* |
| Idle Speed (r.p.m.) | 700 | 650 | 650 | 600 | 650 | 600 |
| (With air conditioning ON) | 700 | 650 | 650 | 600 | 650 | 600 |
| Secondary Throttle Lever Adj. | 21/64" | 21/64" | 21/64" | 21/64" | 21/64" | 21/64" |
| Secondary Throttle Lockout Adj. | .020" | .020" | .020" | .020" | .020" | .020" |
| Float Setting | 7/32" | 7/32" | 7/32" | 7/32" | 7/32" | 7/32" |
| Float Drop | 3/4" | 3/4" | 3/4" | 3/4" | 3/4" | 3/4" |
| Idle Mixture (both screws open) | 1-2 Turns | 1-2 Turns | 1-2 Turns | 1-2 Turns | 1-2 Turns | 1-2 Turns |
| CHOKE | | | | | | |
| Control | Well | Well | Well | Well | Well | Well |
| Type | Coil Spring | Coil Spring | Coil Spring | Coil Spring | Coil Spring | Coil Spring |
| Setting | On Index | On Index | On Index | On Index | On Index | On Index |

## FUEL PUMP

| Fuel Pump | 6 170 Cu. In. 225 Cu. In. | V-8 273 Cu. In. | V-8 318 Cu. In. | V-8 361, 383 Cu. In. 426 Cu. In. |
|---|---|---|---|---|
| Make | Carter | Carter | Carter | Carter |
| Model | MS-3674S | MS-3962S | MS-3673S | MS-3672S |
| Type | Diaphragm | Diaphragm | Diaphragm | Diaphragm |
| Number of Valves | 2 | 2 | 2 | 2 |
| Driven by | Camshaft | Camshaft | Camshaft | Camshaft |
| Pump Pressure (pounds) | 3-1/2 to 5 | 5 to 7 | 5 to 7 | 3-1/2 to 5 |

MyMopar.com

MyMopar.com

# PROPELLER SHAFT AND UNIVERSAL JOINTS

## CONTENTS


| | Page | | Page |
|---|---|---|---|
| CROSS AND ROLLER UNIVERSAL JOINT | 6 | SERVICE DIAGNOSIS | 1 |
| GENERAL INFORMATION | 1 | SPECIFICATIONS | 7 |
| PROPELLER SHAFT ANGULARITY | 2 | TIGHTENING REFERENCE | 6 |


## GENERAL INFORMATION

Three types of propeller shafts are used on Valiant and Plymouth models, dependent upon model application and axle ratio.

The front universal joint on all Valiant and Plymouth models incorporate an internally splined yoke which slides fore and aft on the transmission output shaft to compensate for the movement of the rear axle. A bellows type rubber seal provided with a nylon ring which fits over the sliding yoke is used in the opening of the extension housing to exclude road splash and other foreign material (Fig. 1).

On certain applications on Plymouth models with 8 cylinder engine and automatic transmission, the propeller shaft incorporates an inertia type ring at the front universal joint (Fig. 2). Other Valiant and Plymouth models use both solid propeller shafts and shafts that are rubber isolated near the rear universal joint (Figs. 3 or 4).

The universal joints and sliding spline are permanently lubricated. The joints should be inspected every time the car is serviced, for external seal leakage. The joints need not be disassembled or relubricated unless seal leakage is observed. If the cross and roller universal joints are disassembled and inspected for any reason, they should be repacked with Universal Joint Grease NLGI grade "O" before reassembly.

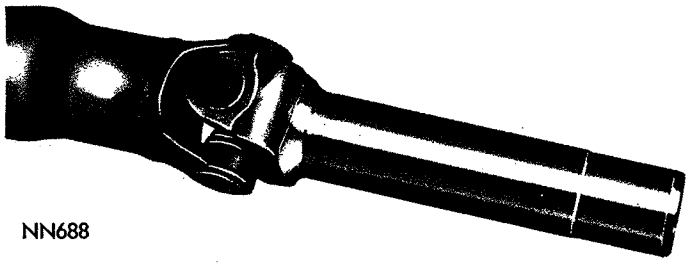


*Fig. 1—Cross and Roller Universal Joint—Front*

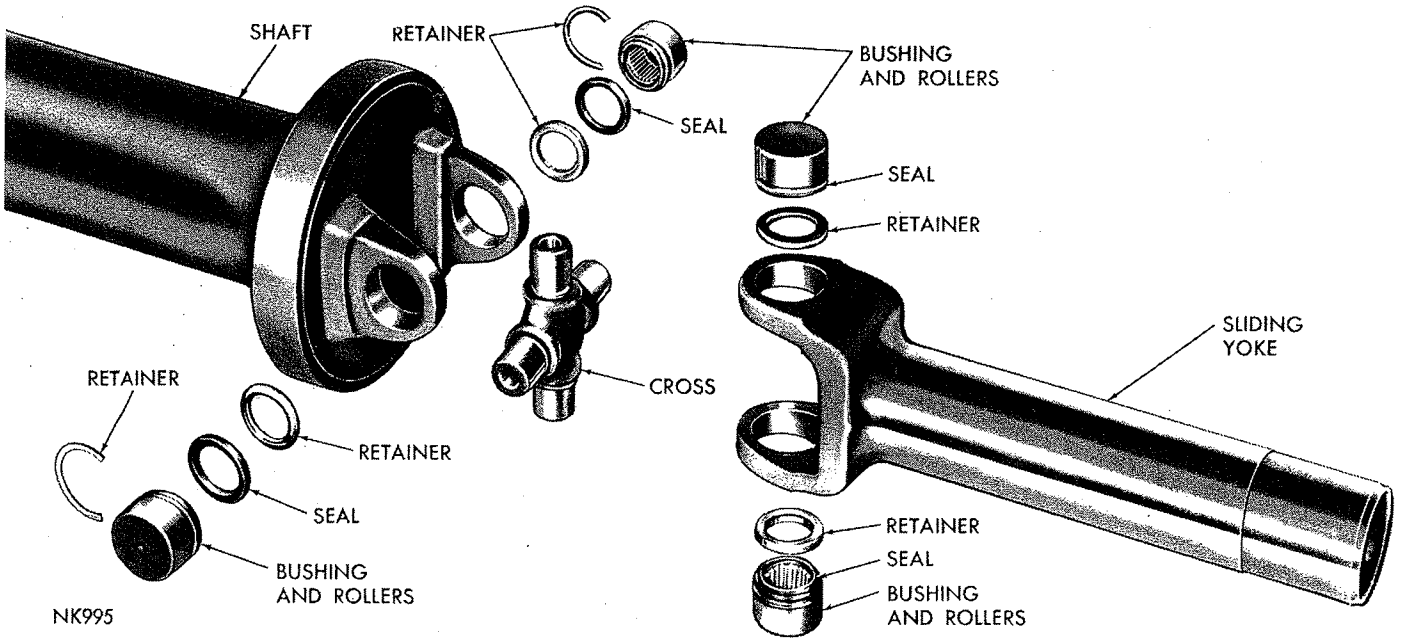


*Fig. 2—Cross and Roller Universal Joint with Inertia Ring—Front*

## SERVICE DIAGNOSIS

| Condition | Possible Cause | Correction |
|---|---|---|
| PROPELLER SHAFT VIBRATION | (a) Undercoating or other foreign matter on shaft. | (a) Clean exterior shaft and wash with solvent. |
| | (b) Loose universal joint flange bolts. | (b) Tighten bolt nuts to specified torque. |
| | (c) Loose or bent universal joint flange. | (c) Install new flange. Tighten to specifi- |

MyMopar.com

| Condition | Possible Cause | Correction |
|---|---|---|
| | | cations. |
| | (d) Improper drive line angularity. | (d) Correct angularity. See "Propeller Shaft Angularity." |
| | (e) Rear spring center bolt not in seat. | (e) Loosen spring U-bolts, reseat center bolts and tighten U-bolts to specifications. |
| | (f) Worm universal joint bearings or missing rollers. | (f) Recondition universal joint. |
| | (g) Propeller shaft damaged (bent tube) or out of balance. | (g) Install new propeller shaft. |
| | (h) Broken rear spring. | (h) Replace rear spring. |
| | (i) Rear springs not matched. | (i) Install correct spring. |
| **UNIVERSAL JOINT NOISE** | (a) Propeller shaft flange bolt nuts loose. | (a) Tighten nuts to specifications. |
| | (b) Lack of lubrication. | (b) Recondition universal joint. |

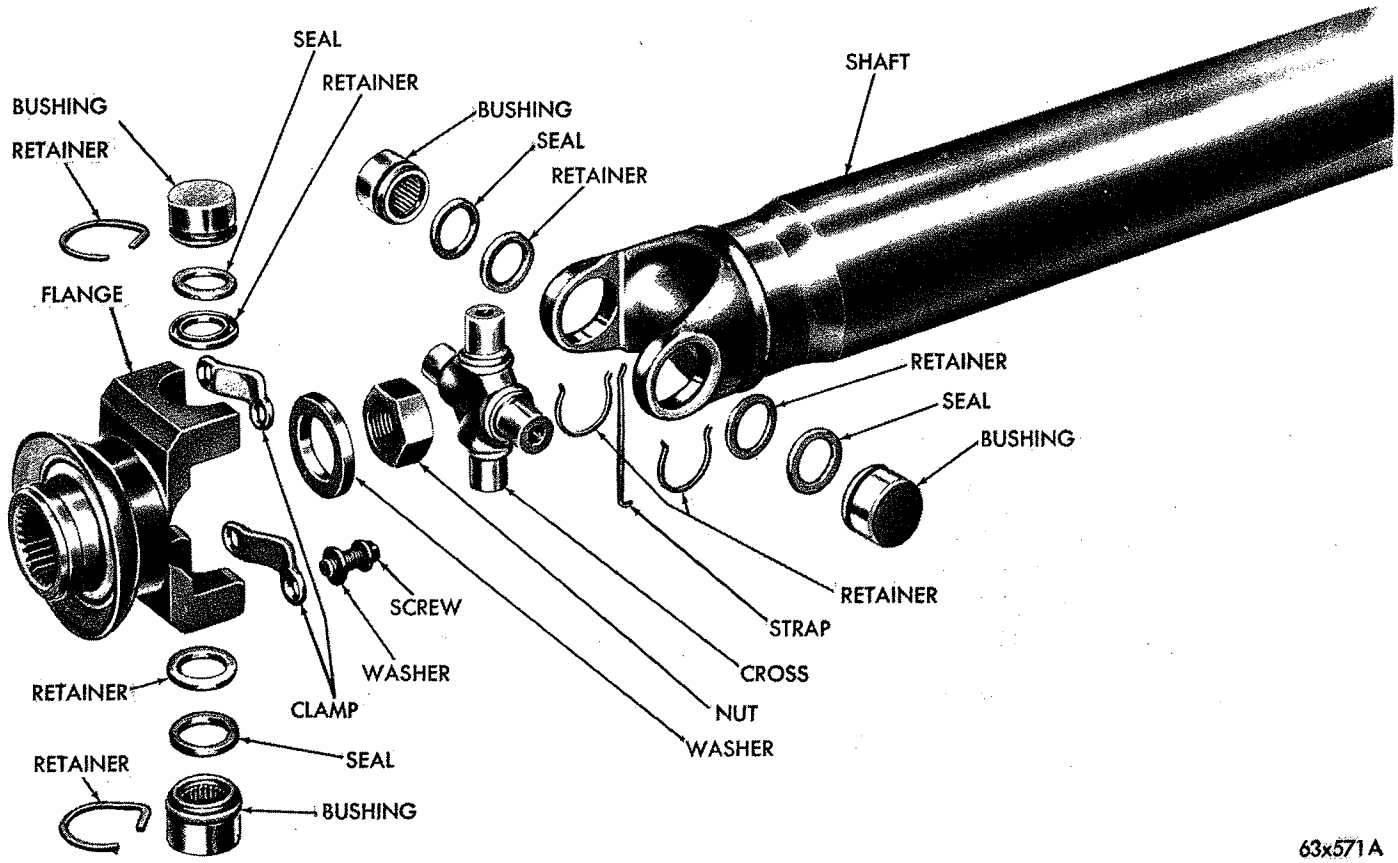


***Fig. 3—Cross and Roller Universal Joint—Rear—All Models***

## SERVICE PROCEDURES

### PROPELLER SHAFT ANGULARITY

The increased emphasis on the need for a quiet, smooth operating drive line in all cars require that the universal joint angles be maintained within acceptable tolerances. Propeller shaft and rear axle housing angularity may be measured by using the Propeller Shaft Angularity Tool C-3976 (Fig. 5). This tool makes it possible to check the angularity at the engine and differential and carrier.

All joint angle measurements on the vehicle should be made with the car supported by the tires if possible; such as, on an alignment pit or a platform hoist. A two post hoist may be used where other means are not available. The vehicle should be approximately level when taking angle measurements with any heavy items removed from the luggage compartment or passenger compartment. The fuel tank should be full or the equivalent weight simulated.

When using a twin post hoist, the vehicle must be

MyMopar.com

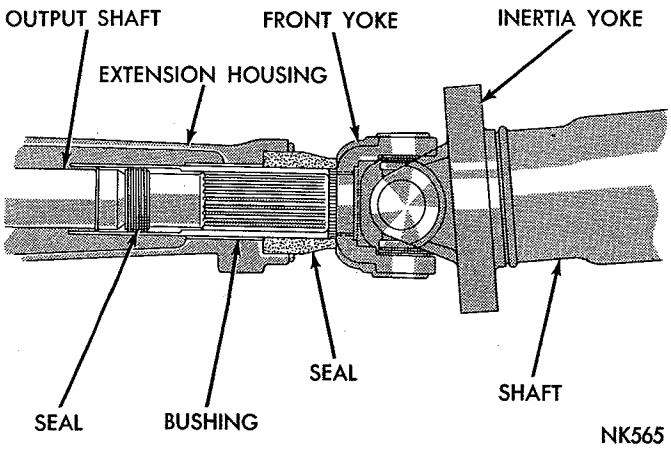


*Fig. 4—Front Universal Joint Sliding Yoke*

supported by the lower control arms and rear axle housing. **DO NOT USE A FRAME CONTACT HOIST WHEN MEASURING PROPELLER SHAFT ANGULARITY.**

## FRONT UNIVERSAL JOINT ANGLE

(1) Attach engine adapter SP-5046 to gauge SP-5060.

(2) Position gauge on left side of engine so that adapter pins contact flat surface of engine oil pan flange adjacent to the vertical wall of the oil pan (Fig. 6). On models equipped with six cylinder engines, use right side of the engine. The gauge must be held vertical as shown with arrow on gauge SP-5060 pointing toward the front of car.

(3) Adjust position of bubble in spirit level in accordance with the listing for appropriate car model as shown in Chart (Fig. 13).

(4) Remove engine adapter SP-5046 and gauge SP-5060 from flange adjacent to the vertical wall of oil pan and separate the gauge from engine adapter.

(5) With gauge SP-5060 adjusted for the correct engine angle reference, position gauge SP-5060

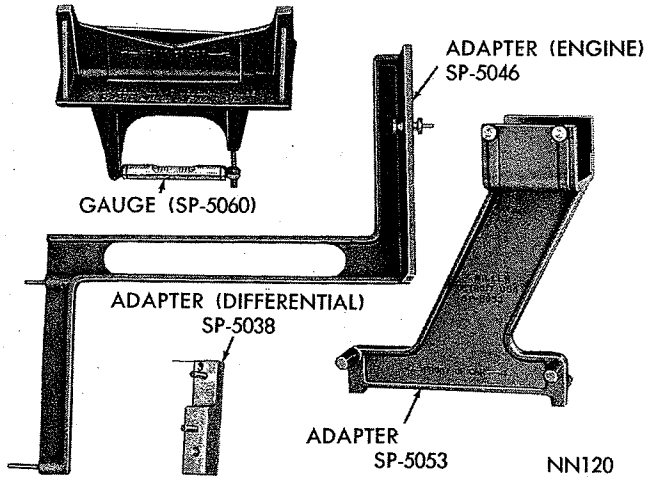


*Fig. 5—Propeller Shaft Angularity Tool C-3976*

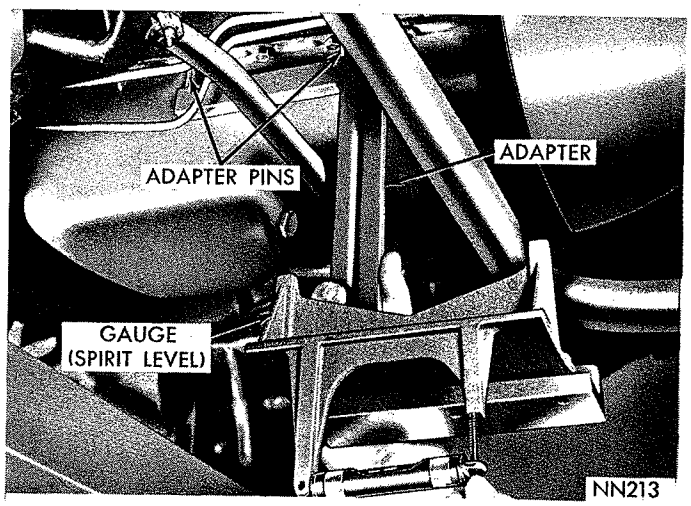


*Fig. 6—Adjusting Gauge on Engine (Front Joint Angle Reference)*

squarely and firmly along underside of the propeller shaft (Fig. 7). Make sure Veeway is in alignment and that both adapter pins are contacting propeller shaft. Be sure arrow on gauge is pointing toward the front of car.

(6) Observe position of bubble in spirit level and compare the position with that shown on Chart (Fig. 13) for front joint angle. A normal joint angle will cause bubble to position itself within the acceptable range. If bubble is found to be slightly forward of the acceptable tolerance range, this means that the angle is actually smaller than that specified and does not need correcting. If bubble in spirit level is found to be rearward of the acceptable range, the angle is too large, and must be corrected. To reduce front universal joint angle, install a flat shim between the transmission extension housing and rear engine mount (Fig. 8). Flat shims ⅛ inch in thickness are required to move the bubble in spirit level one graduation.

(7) To install shim, loosen bolts in rear mount to transmission extension housing.

(8) Raise transmission sufficiently using a floor

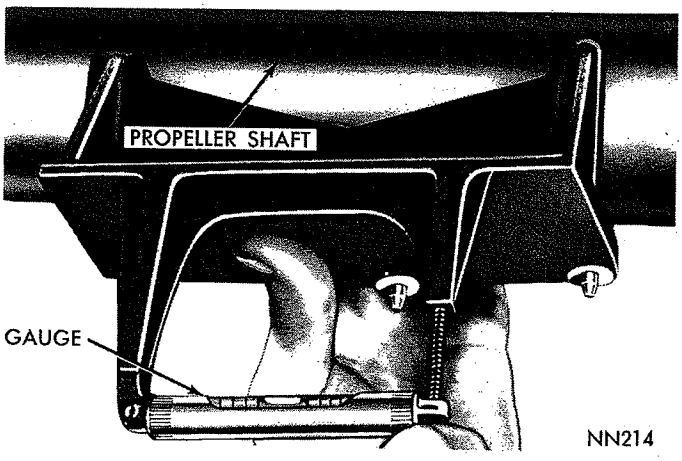


*Fig. 7—Measuring Front Universal Joint Angle*

MyMopar.com

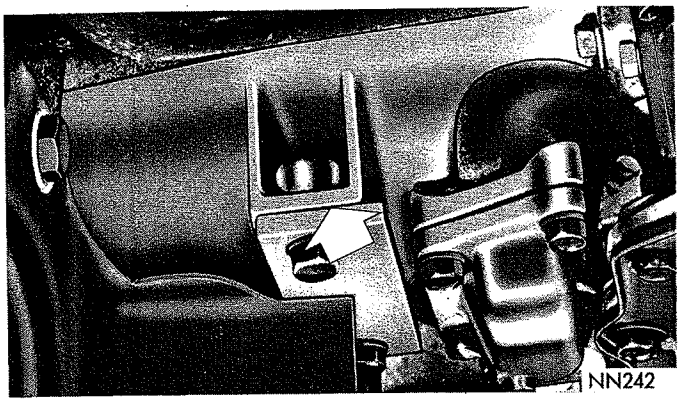


*Fig. 8—Shim Location (Front Universal Joint Angle Correction)*

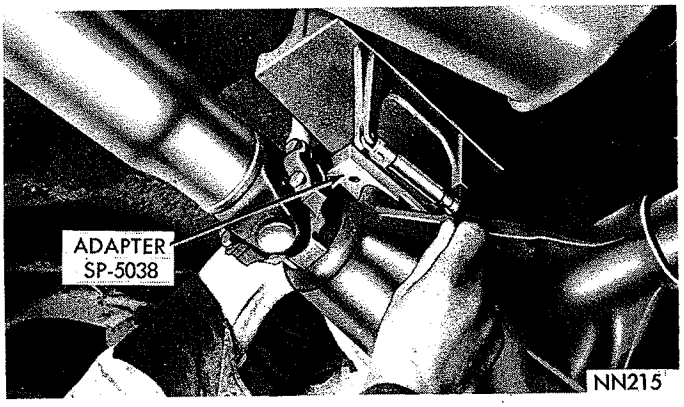


*Fig. 10—Adjusting Gauge on Differential (Rear Joint Angle Reference) Models with 7¼" Axle*

stand and block of wood beneath transmission oil pan.

(9) Install ⅛" shim, lower transmission, remove floor stand and tighten bolts in rear mount to transmission extension housing to specifications.

(10) Recheck front joint angle, starting with step (1) of "Procedure."

**CAUTION: If a great amount of shimming is required at the transmission extension rear mount, make sure extension housing and inertia dampner on propeller shaft will not make contact with floor pan or make interference with seat belt mounting bolts.**

## REAR UNIVERSAL JOINT ANGLE

(1) Remove pinion bumper plate from differential and carrier housing and position gauge SP-5060 on the machined pads with locating pin in rear bolt hole (Fig. 9). The arrow on gauge should point toward the front of car. On models equipped with 7¼ axle place propeller shaft alignment gauge adapter SP-5038 between the gauge and machined pads of the carrier (Fig. 10).

(2) Adjust position of bubble in spirit level in accordance with the listing for appropriate car model as shown in Chart (Fig. 13).

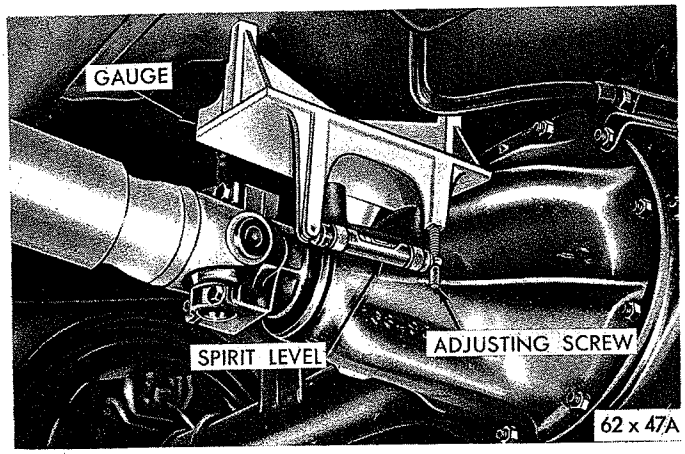


*Fig. 9—Adjusting Gauge on Differential (Rear Joint Angle Reference)*

(3) Remove gauge SP-5060 from differential and carrier assembly and position it squarely and firmly along underside of propeller shaft (Fig. 11). Make sure Veeway is in alignment and that both adapter pins are contacting shaft. Be sure arrow on gauge is pointing toward the front of car.

(4) Observe position of bubble in spirit level and compare the position with that shown on Chart (Fig. 13) for rear joint angle. A normal joint angle will cause the bubble to position itself within the acceptable range.

(5) If bubble in spirit level is found outside the acceptable range indicated on Chart (Fig. 13), you will have to install a wedge type shim between both rear springs and the axle housing spring pads to bring position of bubble within the acceptable range.

To make sure shims are installed properly, remember this rule. If bubble is too far forward, insert shim with thick end toward front of car. If bubble is too far to rear, the nose of differential is too high, so thick end of shim goes toward rear of car (Fig. 12). A 1° shim will move bubble in spirit level about 3 graduations forward or rearward, depending on which way the thick end is installed.

Presently, there are a number of makes of wedge

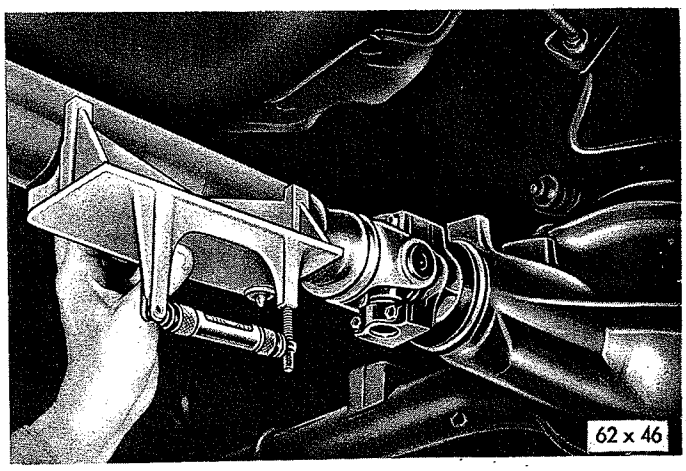


*Fig. 11—Measuring Rear Universal Joint Angle*

MyMopar.com

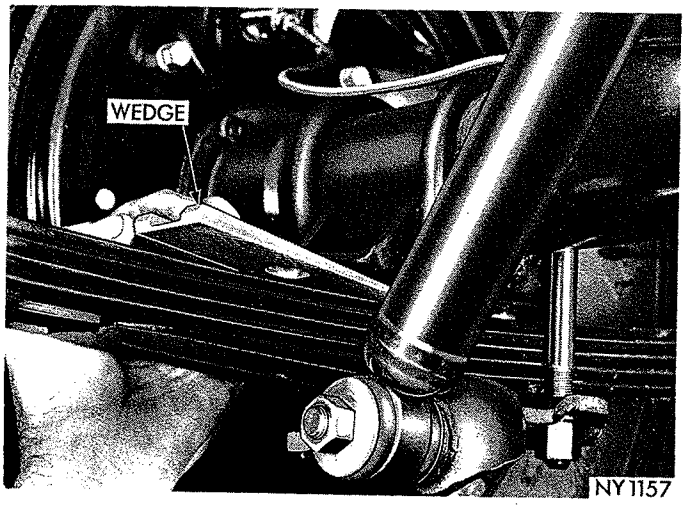


***Fig. 12—Tapered Wedge Location (Rear Universal Joint Angle Correction)***

type shims available commercially. Always make sure shims you use are made of steel and are the same width as the springs on the car. Chrysler Parts Division has made available steel shims in varying angles of ½°, 1°, 2°, and 3° making it possible with these combinations to set the rear universal joint angle within ½° of a perfect angle.

(6) To install shims, loosen spring "U" bolt nuts and install shims between rear springs and axle housing spring pads.

(7) Tighten spring "U" bolt nuts to proper specifications.

(8) Recheck rear universal joint angle after installation of wedge type shim, to make sure position of bubble in spirit level is within the acceptable range.

(9) Reinstall rebound bumper and plate assembly on differential carrier, tighten screws to 200 inch-pounds.

**CAUTION: Under no circumstances should a shim pack be used that is over ¼ inch thick at the center. If that much shimming is required, look for a possible broken rear spring, mislocated spring seat, etc.**

## PROPELLER SHAFT

### *Removal—Rear Joint (All Models)*

(1) Remove both rear universal joint roller and bushing assembly clamps from drive pinion flange (Fig. 3). **Do not disturb the retaining strap used to hold the bushing assemblies on the universal joint cross.**

| UNIVERSAL JOINT | ANGULARITY MEASUREMENT AND CORRECTION CHART | |
|---|---|---|
| CAR TYPE AND WHEELBASE | FRONT JOINT ANGLE<br>ADJUST POSITION OF BUBBLE WITH GAUGE AT ENGINE OIL PAN FLANGE. | REAR JOINT ANGLE<br>ADJUST POSITION OF BUBBLE WITH GAUGE ON DIFFERENTIAL CARRIER. |
| VALIANT (EXCEPT STATION WAGON) 106" W.B. | ←FRONT OF CAR | ←FRONT OF CAR |
| VALIANT STATION WAGON 106" W.B. | | |
| PLYMOUTH (EXCEPT STATION WAGON) 116" W.B. | | |
| PLYMOUTH STATION WAGON 117" W.B. | | |
| PLYMOUTH (EXCEPT STATION WAGON) 119" W.B. | | |
| PLYMOUTH STATION WAGON 121" W.B. | | |
| FINAL READING ON PROPELLER SHAFT (ALL MODELS) | ACCEPTABLE REGION<br>ANGLE LOW / ANGLE HIGH<br>←FRONT OF CAR | ACCEPTABLE REGION<br>ANGLE HIGH / ANGLE LOW<br>←FRONT OF CAR |
| CORRECTION PROCEDURE | ADD SHIMS AT ENGINE REAR MOUNT (⅛" FOR EACH GAUGE DIVISION) TO REDUCE FRONT JOINT ANGLE. CORRECT LOW ANGLES ONLY IF FLOOR PAN INTERFERENCE IS ENCOUNTERED. | ADD SHIMS AT REAR AXLE HOUSING SPRING SEATS. 1° WEDGE SHIM MOVES BUBBLE 3 TO 4 GAUGE DIVISIONS. TO REDUCE ANGLE, INSTALL THICK END OF WEDGE TO FRONT OF CAR. NN216 |

***Fig. 13—Universal Joint Angularity Reference Chart***

MyMopar.com

**CAUTION: Do not allow propeller shaft to drop or hang loose from either joint during removal. Wire up or otherwise support the loose end of shaft to prevent damage to joint.**

### *Front Joint (All Models with Sliding Front Yoke)*

(1) Slide propeller shaft with the front yoke from the transmission output shaft (Fig. 4). Be careful not to damage splines on output shaft or yoke. Examine sliding yoke seal for evidence of leakage. If no leakage is evident, do not disturb the seal. If necessary to replace the seal, refer to Transmission Group, 21.

**CAUTION: It is important to protect the machined surface of the sliding yoke from damage after propeller shaft has been removed.**

### *Installation*

### *Front Joint (All Models with Sliding Front Yoke)*

(1) Before installing propeller shaft clean old lubricant from splines of slip spline yoke (Fig. 2). Lubricate with approximately one-third ounce of an Automotive Multi-Purpose Grease, NLGI grade 2. Multi-Mileage Lubricant Part Number 2525035 is suitable for this application. Spread evenly over all the splined area of yoke.

(2) Engage the yoke splines on end of output shaft, being careful not to burr the splines (Fig. 4).

### *Rear Joint (All Models)*

(1) Install rear universal joint cross roller bushings in the seats of pinion yoke. Install bushing clamps and attaching screws (Fig. 3). Tighten screws to 170 inch-pounds.

## CROSS AND ROLLER UNIVERSAL JOINT

### *Disassembly*

(1) **Before disassembling universal joint, mark yoke, cross and bushings to facilitate reassembly if inspection discloses parts are serviceable.**

(2) Remove the four bushings retainers from yoke (Figs. 2 and 3). Press one roller and bushing out of yoke by pressing opposite bushing.

(3) Press out remaining roller and bushing assembly by pressing on end of cross.

(4) Remove cross assembly from yoke. **Do not remove seal retainers from cross.** The cross and retainers are serviced as an assembly.

### *Cleaning and Inspection*

(1) Clean all parts in a suitable solvent and dry with compressed air. Examine bearing surfaces of cross. They should be smooth and free from ripples and pits. If bearing surfaces or seal retainers are damaged, replace cross assembly.

(2) Examine rollers in bushings. Rollers that have operated on a worn cross should be replaced. Rollers should have a uniformly good appearance and roll freely inside bushings.

### *Assembly*

(1) Lubricate roller and bushing assemblies with Universal Joint Grease, NLGI Grade O. Also, fill reservoirs in the ends of the cross.

(2) Place cross in propeller shaft yoke, observing identification marks made at disassembly. Install roller and bushing assemblies in yoke, matching identifying marks.

(3) Press both bushing assemblies into yoke while guiding cross into bushings. Press until bushing retainers can be installed in grooves in bushings.

(4) Position remaining two bushing assemblies on cross. Install retainer strap to hold bushings on cross during installation of shaft on pinion flange. Lightly tap outer ends of bushings while rotating cross to be sure cross and bushings operate freely.

## TIGHTENING REFERENCE

| | POUNDS FOOT | POUNDS INCH |
|---|---|---|
| Pinion Flange Clamp Screw (Rear) | | 170 |
| Rear Spring "U" Bolt Nut (Models with 7-1/4" Axle) | 40 | |
| Rear Spring "U" Bolt Nut (Models with 8-3/4" Axle) | 45 | |
| Pinion Bumper Plate Screw (Models with 7-1/4" Axle) | | 150 |
| Pinion Bumper Plate Screw (Models with 8-3/4" Axle) | | 200 |

MyMopar.com

# SPECIFICATIONS

| MODEL APPLICATION | Valiant 6 Cyl. | Valiant 8 Cyl. | Belvedere-Satellite 6 Cyl. | Belvedere-Satellite 8 Cyl. | Fury 6 Cyl. | Fury 8 Cyl. |
|---|---|---|---|---|---|---|
| PROPELLER SHAFT | | | | | | |
| Type | Tubular | | Tubular | | Tubular | |
| * LENGTH—INCHES | | | | | | |
| MANUAL 3-SPEED TRANSMISSION | | | | | | |
| 170, 225 Cu. In. Engines—except station wagon | 51.61 | ..... | (1)57.60 | ..... | 58.50 | ..... |
| station wagon | 51.61 | ..... | 56.42 | ..... | 60.54 | ..... |
| 273 Cu. In. Engine—except station wagon | ..... | 51.61 | ..... | 51.28 | ..... | ..... |
| station wagon | ..... | 51.61 | ..... | 52.28 | ..... | ..... |
| 318, 361, 383, 426 Cu. In. Engines—except station wagon | ..... | ..... | ..... | 51.28 | ..... | 54.13 |
| station wagon | ..... | ..... | ..... | 52.28 | ..... | 56.17 |
| MANUAL 4-SPEED TRANSMISSION | | | | | | |
| 225, 273 Cu. In. Engines—except station wagon | 51.61 | 51.61 | ..... | ..... | ..... | ..... |
| station wagon | 51.61 | 51.61 | ..... | ..... | ..... | ..... |
| 318, 361, 383, 426 Cu. In. Engines—except station wagon | ..... | ..... | ..... | 51.28 | ..... | 54.13 |
| station wagon | ..... | ..... | ..... | 52.28 | ..... | 56.17 |
| AUTOMATIC TRANSMISSION | | | | | | |
| 170, 225 Cu. In. Engines—except station wagon | 51.61 | ..... | (1)57.60 | ..... | 58.50 | ..... |
| station wagon | 51.61 | ..... | 56.42 | ..... | 60.54 | ..... |
| 273 Cu. In. Engine—except station wagon | ..... | 51.61 | ..... | 55.42 | ..... | ..... |
| station wagon | ..... | 51.61 | ..... | 56.42 | ..... | ..... |
| 318, 361, 383, 426 Cu. In. Engines—except station wagons | ..... | ..... | ..... | 51.28 | ..... | 54.13 |
| station wagons | ..... | ..... | ..... | 52.28 | ..... | 56.17 |

| MODEL APPLICATION | Valiant | | | Belvedere-Satellite | | | | Fury | | | |
|---|---|---|---|---|---|---|---|---|---|---|---|
| AXLE RATIO | 2.93 | 3.23 | 3.55 | 2.76 | 2.94 | 3.23 | 3.55 | 2.76 | 2.94 | 3.23 | 3.55 |
| DIAMETER—INCHES | | | | | | | | | | | |
| MANUAL 3-SPEED TRANSMISSION | | | | | | | | | | | |
| 170, 225 Cu. In. Engines— | | | | | | | | | | | |
| except station wagon | 2.75(R) | 2.75 | 2.75(R) | .... | .... | 2.75+(x) | 2.75(R) | .... | .... | 3.00 | 3.00 |
| station wagon | 2.75(R) | 2.75 | 2.75(R) | .... | .... | 2.75(R) | 2.75(R) | .... | .... | 3.25 | 3.25 |
| 273 Cu. In. Engine (2 BBl.)— | | | | | | | | | | | |
| except station wagon | 2.75(R) | 2.75 | 2.75(R) | .... | 2.75(R) | 2.75(R) | 3.25(R) | .... | .... | .... | .... |
| station wagon | 2.75(R) | 2.75 | 2.75(R) | .... | 2.75(R) | 2.75(R) | 3.25(R) | .... | .... | .... | .... |
| 273 Cu. In. Engines (4 BBl.)— | | | | | | | | | | | |
| except station wagon | 2.75(R) | 2.75 | 2.75(R) | .... | .... | .... | .... | .... | .... | .... | .... |
| 318, 361, 383 Cu. In. Engines— | | | | | | | | | | | |
| except station wagon | .... | .... | .... | .... | 2.75(R) | 2.75(R) | 3.25(R) | .... | .... | 2.75 | 2.75 |
| station wagon | .... | .... | .... | .... | 2.75(R) | 2.75(R) | 3.25(R) | .... | .... | 3.25 | 3.25 |
| MANUAL 4-SPEED TRANSMISSION | | | | | | | | | | | |
| 170, 225 Cu. In. Engine— | | | | | | | | | | | |
| except station wagon | 2.75(R) | 2.75 | 2.75(R) | .... | .... | .... | .... | .... | .... | .... | .... |
| station wagon | 2.75(R) | 2.75 | 2.75(R) | .... | .... | .... | .... | .... | .... | .... | .... |
| 273 Cu. In. Engine (2 BBl.)— | | | | | | | | | | | |
| except station wagon | 2.75(R) | 2.75 | 2.75(R) | .... | .... | .... | .... | .... | .... | .... | .... |
| station wagon | 2.75(R) | 2.75 | 2.75(R) | .... | .... | .... | .... | .... | .... | .... | .... |
| 273, Cu. In. Engine (4 BBl.)— | | | | | | | | | | | |
| except station wagon | 2.75(R) | 2.75 | 2.75(R) | .... | .... | .... | .... | .... | .... | .... | .... |
| 361, 383, 426 Cu. In. Engines— | | | | | | | | | | | |
| except station wagon | .... | .... | .... | .... | .... | 3.25(R) | 3.25(R) | .... | .... | 2.75 | .... |
| station wagon | .... | .... | .... | .... | .... | 3.25(R) | 3.25(R) | .... | .... | 3.25 | .... |
| AUTOMATIC TRANSMISSION | | | | | | | | | | | |
| 170, 225 Cu. In. Engines— | | | | | | | | | | | |
| except station wagon | 2.75(R) | 2.75 | 2.75(R) | .... | 2.75(R)+ | 2.75(R)+ | 2.75(R) | .... | 3.00 | 3.00 | 3.00 |
| station wagon | 2.75(R) | 2.75 | 2.75(R) | .... | 2.75(R) | 2.75(R) | 2.75(R) | .... | 3.25 | 3.25 | 3.25 |
| 273 Cu. In. Engine (2 BBl.)— | | | | | | | | | | | |
| except station wagon | 2.75(R) | 2.75 | 2.75(R) | .... | 2.75(R) | 2.75(R) | 2.75 | .... | .... | .... | .... |
| station wagon | 2.75(R) | 2.75 | 2.75(R) | .... | 2.75(R) | 2.75(R) | 2.75 | .... | .... | .... | .... |
| 273 Cu. In. Engine (4 BBl.)— | | | | | | | | | | | |
| except station wagon | 2.75(R) | 2.75 | .... | .... | .... | .... | .... | .... | .... | .... | .... |
| 318 Cu. In. Engine—except station wagon | .... | .... | .... | .... | 2.75(I) | 2.75(R) | .... | .... | 2.75(I) | 2.75(I) | 3.00(I) |
| station wagon | .... | .... | .... | .... | 2.75(I) | 2.75(R) | .... | .... | 3.00(I) | 3.00(I) | 3.00(I) |
| 361, 383, 426 Cu. In. Engines— | | | | | | | | | | | |
| except station wagon | .... | .... | .... | .... | 2.75(I) | 2.75(I) | .... | 2.75(I) | 2.75(I) | 2.75(I) | .... |
| station wagon | .... | .... | .... | .... | 2.75(I) | 2.75(I) | .... | 3.00(I) | 3.00(I) | 3.00(I) | .... |
| UNIVERSAL JOINTS | | | | | | | | | | | |
| Type—Front | Sliding Spline Cross and Roller | | | Sliding Spline Cross and Roller | | | | Sliding Spline Cross and Roller | | | |
| Rear | Cross and Roller | | | Cross and Roller | | | | | | | |

(1) Length used with 7¼ in axle except special application with 8¾ inch axle 55.42 inch length.
* From centerline of front yoke bearing bores to centerline of rear bearing bores.
\+ 7¼ inch axle with 6 cylinder except station wagon.
(x) 2.75 (R) used with 8¾ inch axle with 6 cylinder for special application.
(I) Inertia ring at front joint of propeller shaft.
(R) Rubber isolated at rear joint of propeller shaft.

MyMopar.com

MyMopar.com

# SHOCK ABSORBERS AND REAR SPRINGS

## CONTENTS


| | Page | | Page |
|---|---|---|---|
| REAR SPRINGS | 4 | SPECIFICATIONS | 5 |
| SHOCK ABSORBERS | 1 | TIGHTENING REFERENCE | 6 |


## GENERAL INFORMATION

The rear springs are of the semi-elliptic type with rubber bushings in the "eye" of each end of the main leaf.

The front ends of the springs are attached to mounting brackets bolted to the body. The rear ends of the springs are attached to the body by flat plate shackles (except Belvedere and Fury Station Wagons, which are equipped with offset plates) with rubber shackle bushings. The springs are attached to the rear axle housing spring seats by "U" bolts.

Zinc interleaves are used between the spring leaves on heavy duty suspension equipped cars to help reduce corrosion.

Double acting "Oriflow" shock absorbers are used with rubber mounting bushings at each end of the shock absorber.

Shock absorbers should only be replaced when they have lost their resistance in one or both directions, if they DRIP or if they have been damaged, EVIDENCE OF OIL MOISTURE IS NOT CAUSE TO REPLACE THEM.. REPLACE ONLY THE FAULTY UNIT, DO NOT REPLACE IN PAIRS.

## SERVICE DIAGNOSIS

| Condition | Possible Cause | Correction |
|---|---|---|
| SPRINGS SAG OR BOTTOM | (a) Springs sagged or taken a set. | (a) Replace the spring. |
| | (b) Broken, bent or weak spring leaves. | (b) Replace the spring main leaf, or spring as necessary. |
| SPRING NOISE | (a) Loose "U" bolts. | (a) Tighten "U" bolt nuts to specifications. |
| | (b) Loose or worn shackle bushings. | (b) Replace the bushings and tighten the shackle bolt nuts to specifications. |
| | (c) Worn or missing interliners. | (c) Install new interliners. |
| SPRING BREAKAGE | (a) Loose "U" bolts. | (a) Replace spring. Inspect "U" bolts for damage. Tighten "U" bolt nuts to specifications. |
| | (b) Shock absorber inoperative. | (b) Replace the spring and the shock absorber. |
| SHOCK ABSORBER NOISY | (a) Bushing excessively worn. | (a) Replace bushing. |
| | (b) Faulty internal valve. | (b) Replace shock absorber. |
| | (c) Loose bolt or stud. | (c) Tighten to specifications. |
| SHOCK ABSORBER DRIPPING OIL | (a) Air trapped in system. | (a) Bleed the shock absorber. |
| | (b) Faulty Seal. | (b) Replace the shock absorber. |

## SERVICE PROCEDURES

### SHOCK ABSORBERS

***Front-Removal* (Figs. 1, 2, and 3).**

(1) Remove nut and washer from upper end of piston rod.

(2) Raise car and remove pivot bolt and nut from lower shock absorber eye and mounting bracket.

(3) Compress shock absorber and remove from car by pulling down and out of upper shock absorber mounting bushing.

(4) If upper bushing appears worn, damaged, or deteriorated, remove it by first pressing out inner sleeve, then prying-out or cutting-out the rubber bushing. (This bushing will take some set after it has been in service and should be replaced once it has been removed).

(5) If lower bushing is to be replaced, remove it from shock absorber using Tool C-3553 to press on the outer sleeve of bushing (Fig. 4).

Pressing on inner sleeve will not remove outer sleeve from the shock absorber. **New shock absorbers are furnished with the lower bushing installed; how-**

MyMopar.com

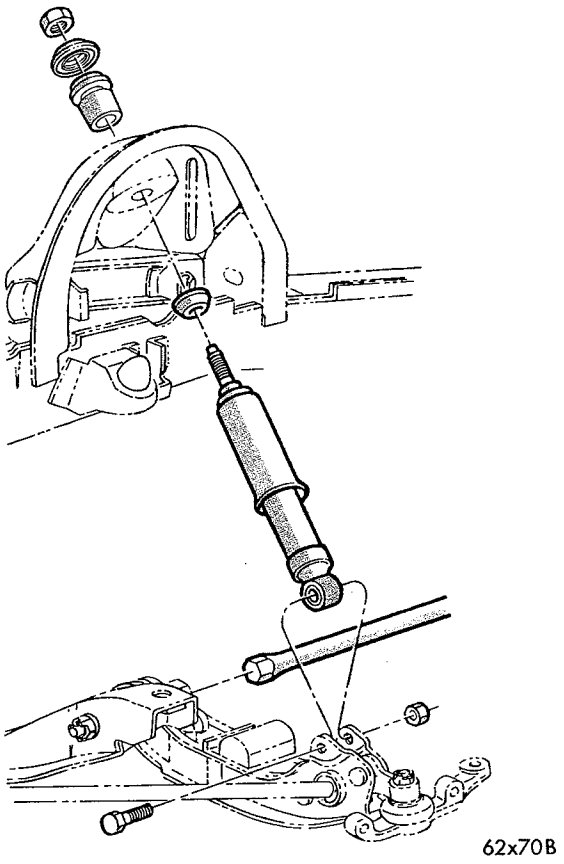


*Fig. 1—Front Shock Absorber (Belvedere - Satellite)*

**ever, bushings are furnished separately for service installation.** Test and bleed shock absorber.

### Installation

(1) With inner steel sleeve removed from upper rubber bushing, immerse bushing in water **(do not use oil or soap)** and with a twisting motion, start bushing into hole of mounting bracket, then tap into place with a hammer. Reinstall steel sleeve.

(2) Install lower mounting bushing in eye of shock absorber using Tool C-3553 (Fig. 4).

(3) Compress shock absorber and install washer on upper rod of shock absorber and insert rod through upper bushing.

(4) Install upper compression washer and retaining nut and tighten to 25 foot-pounds.

(5) Align lower mounting bracket and eye of shock absorber. Install bolt and nut and tighten to 50 foot-pounds with full weight of vehicle on the wheels.

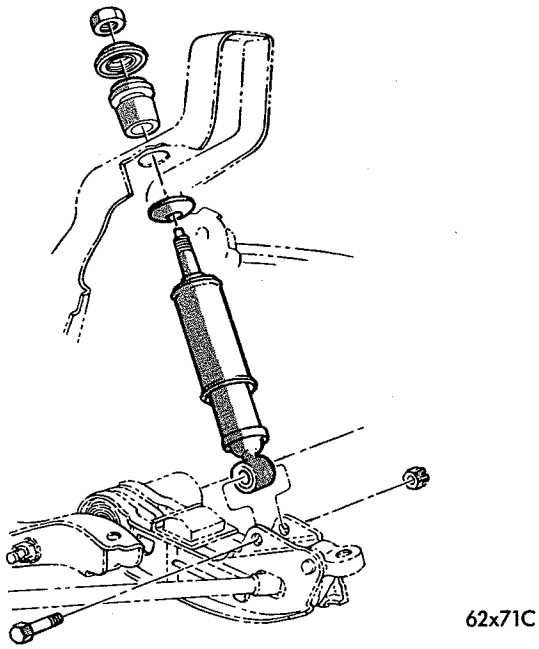


*Fig. 3—Front Shock Absorber (Valiant)*

### Rear-Removal

(1) Remove nuts and washers attaching shock ab-

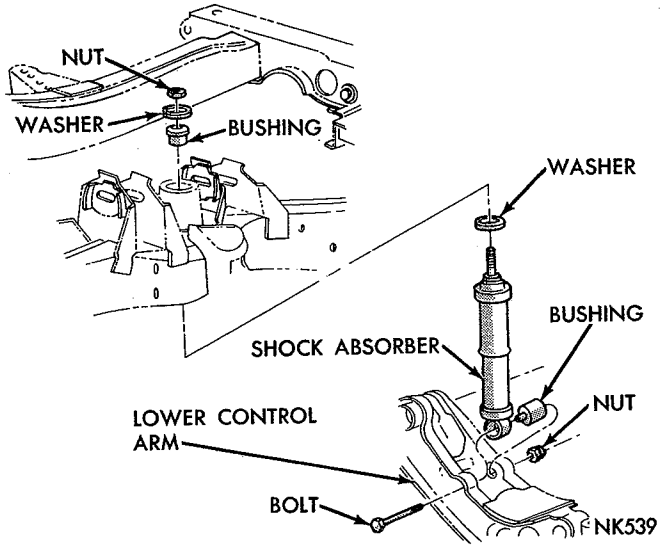


*Fig. 2—Front Shock Absorber (Fury)*

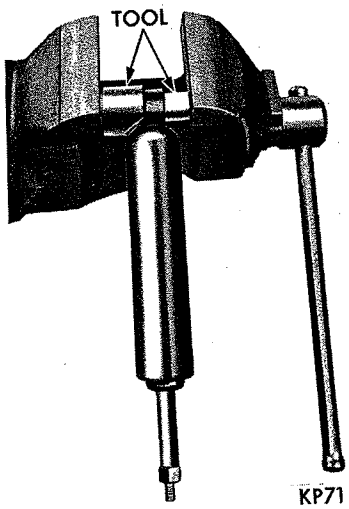


*Fig. 4—Installing Shock Absorber Bushing*

MyMopar.com

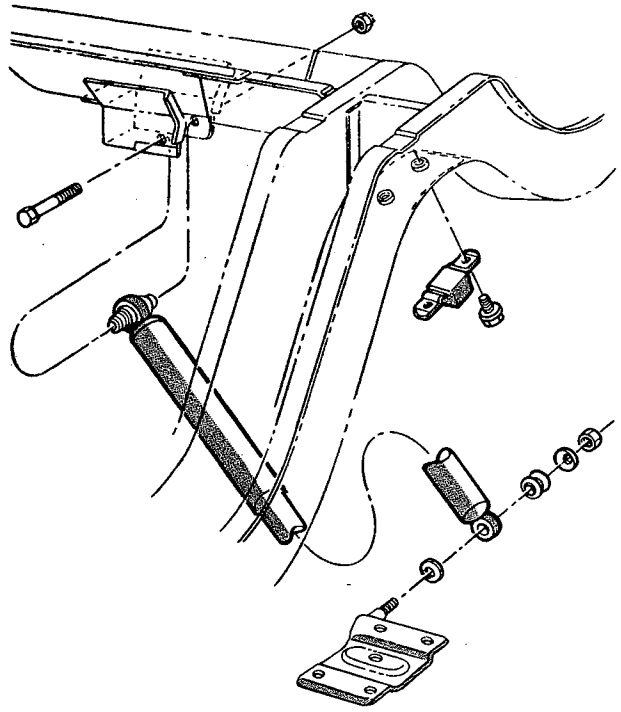

62x68A

**Fig. 5—Rear Shock Absorber (Belvedere-Satellite)**

sorber to its mounting studs. (Figs. 5, 6 and 7).

(2) Remove shock absorber from studs.

(3) Remove remaining cupped washers from studs.

(4) Inspect bushings for deterioration or fatigue, and replace if necessary.

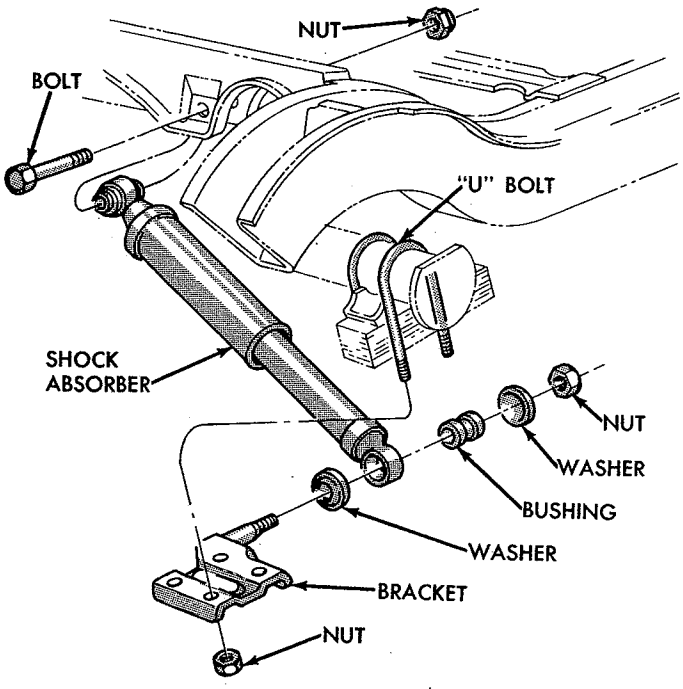


NK543

**Fig. 6—Rear Shock Absorber (Fury)**

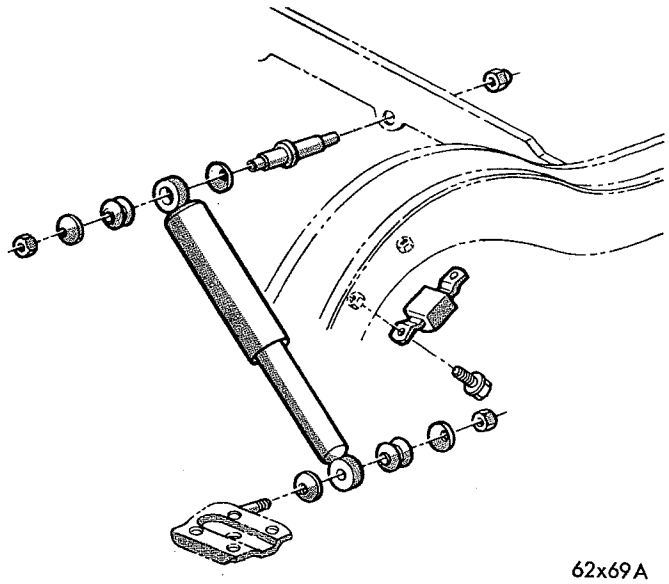

62x69A

**Fig. 7—Rear Shock Absorber (Valiant)**

(5) Test and bleed shock absorber.

### Installation

(1) Position washers on shock absorber mounting studs.

(2) Position shock absorber on mounting studs and install remaining cupped washers and nuts. **Do not tighten nuts until full weight of vehicle is on the wheels.** Tighten upper nut 70 foot-pounds, (Valiant 50 foot-pounds). Tighten lower nut 50 foot-pounds.

### Testing

(1) With shock absorber removed, extend fully in an upright position.

(2) Inspect for evidence of fluid running from the upper end of reservoir. (Actual leakage will be a stream of fluid running down the side and dripping off lower end of unit. A slight amount of seepage is not unusual and does not affect performance.)

(3) To test for low fluid level or trapped air in cylinder, hold shock absorber in a vertical position and alternately extend and compress the unit. There should be no lost motion in either direction.

(4) Should lost motion be evident hold shock absorber in its normal vertical position and fully extend it.

(5) Invert unit and compress it. **Do not extend unit while inverted.**

(6) Repeat steps 4 and 5 several times to expel any air trapped in cylinder.

(7) Should lost motion persist, replace shock absorber. Repeat operation 4 and 5 prior to installation of a new shock absorber. (New shock absorbers may have a greater resistance than an old one due to friction of new seal.)

MyMopar.com

## REAR SPRINGS

### Measuring Height

When measuring rear spring heights, vehicle should be placed on a level floor, have the correct front suspension height on both sides, correct tire pressures, no passenger or luggage compartment load and a full tank of fuel.

(1) Jounce car several times (front bumper first). Release the bumpers at the same point in each cycle.

(2) Measure shortest distance from highest point on the underside of rear axle bumper strap (at rear of bumper) to top of axle housing.

(3) Measure both right and left sides.

If these measurements vary by more than ¾ inch, from side to side, it is an indication that one of the rear springs may need replacing. **It is normal for rear springs to show some reverse arch, even with no load, so appearance alone should not be the reason for spring replacement.**

### Spring Interliner Replacement

(1) Release weight from rear spring by elevating body at closest lifting point of body.

(2) Remove nut and washer from spring alignment clips and remove clips. (On Valiant Models equipped with four leaf springs, discard alignment clips.)

(3) Separate the spring leaves with a tapered pry bar or screwdriver and remove interliners.

(4) Keeping spring leaves separated, clean mating area of both spring leaves thoroughly. **If rust or corrosion is evident, wrap sandpaper around a flat file or putty knife and sand until area is smooth and clean.**

(5) With spring leaves still separated, insert new interliner with retaining buttons in alignment with locating holes.

(6) Press retaining buttons into retainer holes and remove pry bar from spring leaves.

(7) Repeat above procedure for balance of the interliners. **(Do not lubricate interliners.)**

(8) Reinstall aligning clips and replace retaining nuts and washers. (On Valiant Models equipped with a four leaf spring, install a new bolt on type clip.)

(9) Lower vehicle onto its wheels.

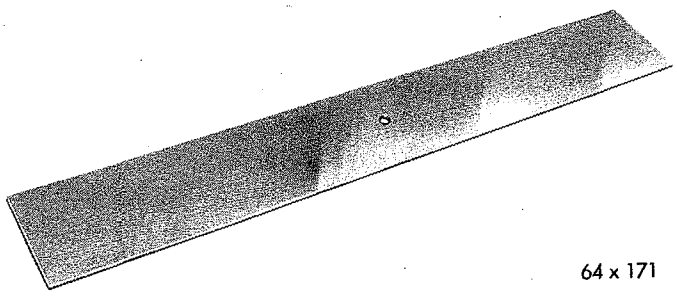


*Fig. 8—Zinc Interleaf*

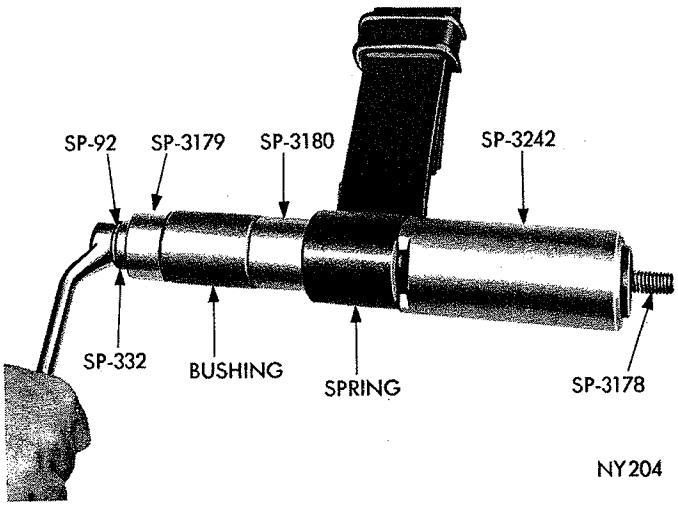


*Fig. 9—Pivot Bushing Replacement*

### Zinc Interleaf

To remove or install zinc interleaves (Fig. 8). between spring leaves, it will be necessary to remove center bolt and disassemble spring leaves. Tighten spring center bolt nut 10 foot-pounds.

### Pivot Bushing Replacement

(1) Raise car so spring is relaxed with rear wheels just touching floor. **Do not permit weight of rear axle to be suspended on fully extended shock absorbers.**

(2) To replace front bushing, remove rear spring front hanger from body bracket. Remove pivot bolt and hanger from spring.

(3) Place new bushing on Tool C-3729 (Fig. 9). Arrange tool on spring eye, then press out old bushing while pressing new bushing in the one operation.

(4) Assemble front hanger to spring, but do not tighten pivot bolt nut until full weight of vehicle is on the wheels.

(5) Attach spring hanger to body bracket and tighten mounting bolts to 30 foot-pounds.

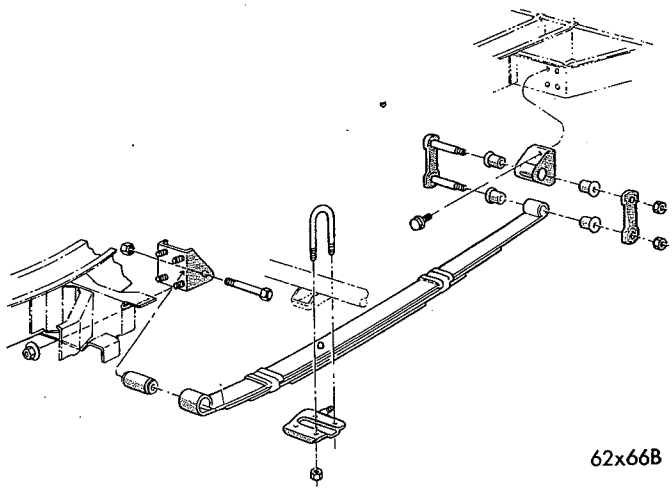


*Fig. 10—Rear Spring (Valiant)*

MyMopar.com

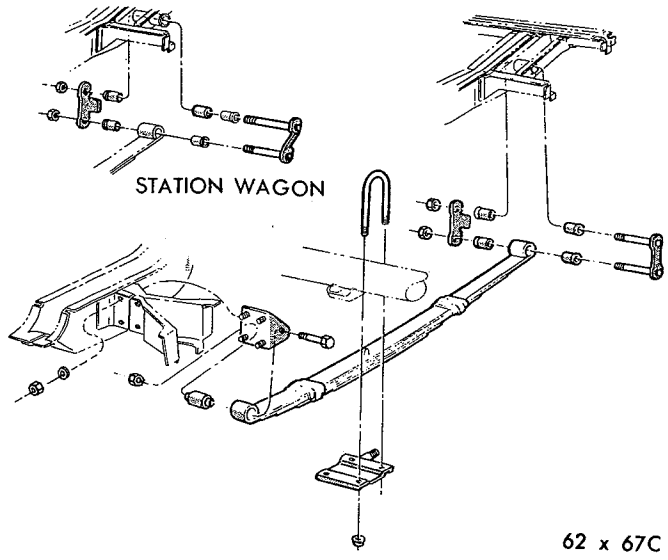


*Fig. 11—Rear Spring (Belvedere-Satellite)*

(6) To replace spring shackle bushing, remove rear hanger from body bracket. Remove shackle, then slide bushings out of spring and hanger.

(7) Insert new bushings in spring and hanger, then assemble shackle and hanger on spring. Start shackle bolt nuts.

(8) Attach hanger to body bracket and tighten mounting bolt to 30 foot-pounds.

(9) With full weight of vehicle on the wheels, tighten rear spring front pivot bolt nut 60 foot-pounds on 6 cyl. Valiant and 125 foot-pounds on all other models. Tighten the shackle nuts 40 foot-pounds (Belvedere-Satellite), 35 foot-pounds (Fury), 30 foot-pounds (Valiant).

## Replacement

### Removal

(1) Raise vehicle to a comfortable working level.

(2) Disconnect rear shock absorber at lower mounting stud.

(3) Support vehicle at lifting points, permitting rear springs to hang free.

(4) Support rear axle housing to this position.

(5) Remove nuts attaching rear spring front pivot hanger to body frame (Figs. 10, 11 and 12).

(6) Remove "U" bolt nuts and spring plate.

(7) Remove rear hanger bolts and remove spring from car.

(8) Remove rear spring front pivot bolt and remove hanger from spring.

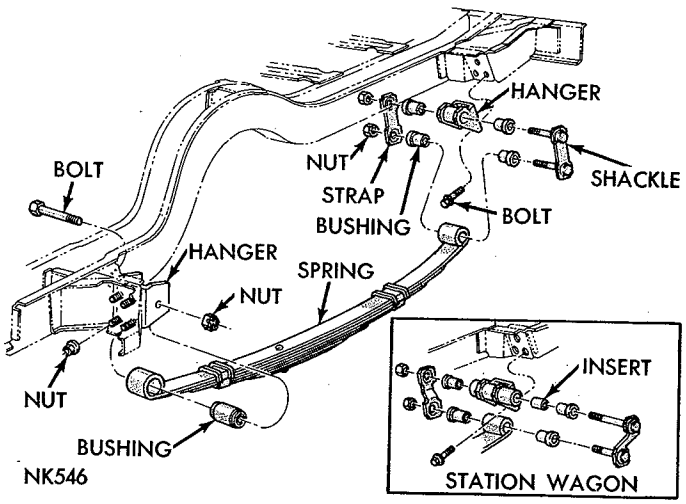


*Fig. 12—Rear Spring (Fury)*

(9) Remove rear shackle and bushing from spring and hanger.

### Installation

Inspect rear spring front pivot bolt bushing and if necessary replace bushing using Tool C-3729.

(1) Attach front hanger to front end of spring and start pivot bolt nut. **Do not tighten.**

(2) Assemble rear shackle and bushing in rear of spring and rear spring hanger. **(Do not lubricate rubber bushings.)** Start shackle bolt nuts. **Do not tighten.**

(3) Attach rear spring rear hanger to body bracket and tighten bolts to 30 foot-pounds.

(4) Attach rear spring front hanger to body bracket and tighten nuts to 30 foot-pounds.

(5) Remove rear axle housing support and place center hole of axle spring seat over the head of spring center bolt.

(6) Place spring plate under spring and install "U" bolts and tighten nuts to 45 foot-pounds. (Valiant 40 foot-pounds.)

(7) Raise vehicle and connect rear shock absorbers. Remove stands and lower car onto its wheels.

(8) Jounce the car several times (front bumper first) and compare spring heights. It may be necessary to replace the mating spring to insure position of vehicle.

(9) Tighten pivot bolt and or nut 125 foot-pounds (Valiant 6 cyl. 60 foot-pounds) and shackle nuts 40 foot-pounds (Belvedere-Satellite) 35 foot-pounds (Fury) 30 foot-pounds (Valiant) with full weight of vehicle on the wheels.

MyMopar.com

# SPECIFICATIONS

| MODEL APPLICATION | Fury | Belvedere-Satellite | 6 Cyl. Valiant | 8 Cyl. |
|---|---|---|---|---|
| REAR SPRINGS | | | | |
| Type | | Semi-Elliptic | | |
| NUMBER OF LEAVES | | | | |
| Sedan | | | | |
| (Standard) | 5 | 4½ | 4 | 4½ |
| (Heavy Duty) | 6* | 4½* | 5 | 5½ |
| (383-426 Engine) | 6 | | | |
| (225 Engine) | | | 5 | |
| Station Wagon | | | | |
| (Standard) | 6½ | 4½* | 5 | 6 |
| (Heavy Duty) | 6½* | 5½* | 6 | 7 |
| Barracuda | | | | |
| (Standard) | | | 4½ | 4½ |
| (Heavy Duty) | | | 6 | 6 |
| (4 Bbl. Carb.) | | | — | 5½ |
| Police & Taxi | | | | |
| (Standard) | | 4½* | 5 | |
| (Heavy Duty) | | 5½* 8 Cyl. | 6 | |
| (Station Wagon) (Std.) | | 4½* | 6 | |
| (Heavy Duty) | | 5½* | 7 | |
| LENGTH (inches) | 58 | 58 | 55 | |
| WIDTH (inches) | 2½ | 2½ | 2½ | |
| MOUNTING | | | | |
| Front | | Pivot, Rubber Bushing | | |
| Rear | | Shackle, Rubber Bushing | | |
| SHOCK ABSORBERS | | | | |
| Type | | Oriflow | | |
| Mounting | | Rubber Bushing | | |

* Zinc interleaves used between all leaves.

# TIGHTENING REFERENCE

| | Foot Pounds |
|---|---|
| **REAR SPRINGS** | |
| Center Bolt Nut | 10 |
| Front Hanger Nut | 30 |
| Pivot Bolt or Nut (Except Valiant 6 Cyl.) | 125 |
| Valiant 6 Cyl. | 60 |
| Rear Hanger Bolt | 30 |
| Shackle Nut—Belvedere-Satellite | 40 |
| Valiant | 30 |
| Fury | 35 |
| "U" Bolt Nut (Except Valiant) | 45 |
| Valiant | 40 |
| **SHOCK ABSORBERS** | |
| Front Lower Bolt Nut | 50 |
| — Upper Shaft Nut | 25 |
| Rear Lower Stud Nut | 50 |
| — Upper Bolt Nut (Except Valiant) | 70 |
| Stud Nut Valiant | 50 |

MyMopar.com

# STEERING

## CONTENTS


| | Page | | Page |
|---|---|---|---|
| MANUAL STEERING GEAR | 1 | POWER STEERING PUMP | 24 |
| POWER STEERING GEAR | 10 | SPECIFICATIONS | (Rear of each Section) |


## MANUAL STEERING GEAR

### INDEX


| | Page | | Page |
|---|---|---|---|
| Adjustments | 2 | General Information | 1 |
| Cross Shaft Oil Seal | 9 | Service Diagnosis | 1 |
| Gear Installation | 8 | Specifications | 9 |
| Gear Reconditioning | 4 | Tightening Reference | 10 |
| Gear Removal | 3 | | |


### GENERAL INFORMATION

The manual steering gear (Fig. 1) is designed to provide easy steering with a minimum of friction in the steering gear. A ball nut travels up or down on the wormshaft, riding on recirculating balls acting as a screw thread.

The wormshaft and ball nut assembly is supported in the gear housing by an adjustable ball thrust type upper and lower bearing. The lower bearing cup is pressed into the gear housing, and the upper bearing cup is pressed into the wormshaft bearing adjuster.

The cross shaft is integral with the sector gear. The sector gear meshes with the rackteeth on the re-circulating ball nut. Adjustment at this point is controlled by the cross shaft adjusting screw which extends through the housing cover.

### SERVICE DIAGNOSIS

| Condition | Possible Cause | Correction |
|---|---|---|
| **HARD STEERING** | (a) Low or uneven tire pressure. | (a) Inflate tires to recommended pressures. |
| | (b) Insufficient lubricant in the steering gear housing or in steering linkage. | (b) Lubricate as necessary. |
| | (c) Steering gear shaft adjusted too tight. | (c) Adjust according to instructions. |
| | (d) Front wheels out of line. | (d) Align the wheels. See "Front Suspension." |
| | (e) Steering column misaligned. | (e) See "Steering Gear Alignment." |
| **PULL TO ONE SIDE (Tendency of the Vehicle to veer in one direction only)** | (a) Incorrect tire pressure. | (a) Inflate tires to recommended pressures. |
| | (b) Wheel bearings improperly adjusted. | (b) See "Front Wheel Bearing Adjustment." |
| | (c) Dragging brakes. | (c) Inspect for weak, or broken brake shoe spring, binding pedal. |
| | (d) Improper caster and camber. | (d) See "Front Wheel Alignment Group." |
| | (e) Incorrect toe-in. | (e) See "Front Wheel Alignment Group." |
| | (f) Grease, dirt, oil or brake fluid on brake linings. | (f) Inspect, replace and adjust as necessary. |
| | (g) Front and rear wheels out of alignment. | (g) Align the front wheels. See "Front Suspension Group." |
| | (h) Broken or sagging rear springs. | (h) Replace rear springs. |
| | (i) Bent suspension parts. | (i) Replace parts necessary. |
| **WHEEL TRAMP (Excessive Vertical Motion of Wheels)** | (a) Incorrect tire pressure. | (a) Inflate tires to recommended pressures. |
| | (b) Improper balance of wheels, tires and brake drums. | (b) Balance as necessary. See "Wheels and Tires." |
| | (c) Loose tie rod ends or steering connections. | (c) Inspect and repair as necessary. |
| | (d) Worn or inoperative shock absorbers. | (d) Replace shock absorbers as necessary. |

MyMopar.com

| Condition | Possible Cause | Correction |
|---|---|---|
| **EXCESSIVE PLAY OR LOOSENESS IN THE STEERING WHEEL** | (a) Steering gear shaft adjusted too loose or badly worn. | (a) Replace worn parts and adjust according to instructions. |
| | (b) Steering linkage loose or worn. | (b) Replace worn parts. See "Front Wheel Alignment." |
| | (c) Front wheel bearings improperly adjusted. | (c) Adjust according to instructions. |
| | (d) Steering arm loose on steering gear shaft. | (d) Inspect for damage to gear shaft and steering arm, replace parts as necessary. |
| | (e) Steering gear housing attaching bolts loose. | (e) Tighten attaching bolts to tightening reference. |
| | (f) Steering arms loose at steering knuckles. | (f) Tighten according to tightening reference. |
| | (g) Worn ball joints. | (g) Replace ball joints as necessary. See "Front Suspension." |

## SERVICE PROCEDURES

### ADJUSTMENTS

Two adjustments are provided in the steering gear (Figs. 2 and 3). The worm bearing pre-load adjustment, and the ball nut rack sector gear mesh adjustment.

Before the correct adjustment can be made at the ball nut rack and the sector gear, it must be determined that the worm bearing pre-load is properly adjusted.

The worm bearing pre-load adjustment is controlled by the worm thrust bearing adjuster which threads into the housing at the upper end of the wormshaft.

#### *Worm Bearing Pre-Load*

(1) Disconnect steering gear arm from cross shaft with Tool C-3646 (Fig. 4).

(2) Remove horn button or horn ring.

(3) Loosen cross shaft adjusting screw lock nut, and back out adjusting screw approximately two turns. This will relieve any friction load which may be present at the closely meshed ball nut rack and sector gear teeth.

(4) Turn steering wheel two complete turns from straight ahead position, and place torque wrench Tool C-3380 on steering shaft nut.

(5) Rotate steering shaft at least one turn toward straight ahead position, while testing rotating torque with torque wrench.

The torque required to keep wheel moving should be between 1½ and 4½ inch-pounds. If reading is not within these limits, adjustment can be made, in or out of the vehicle as follows:

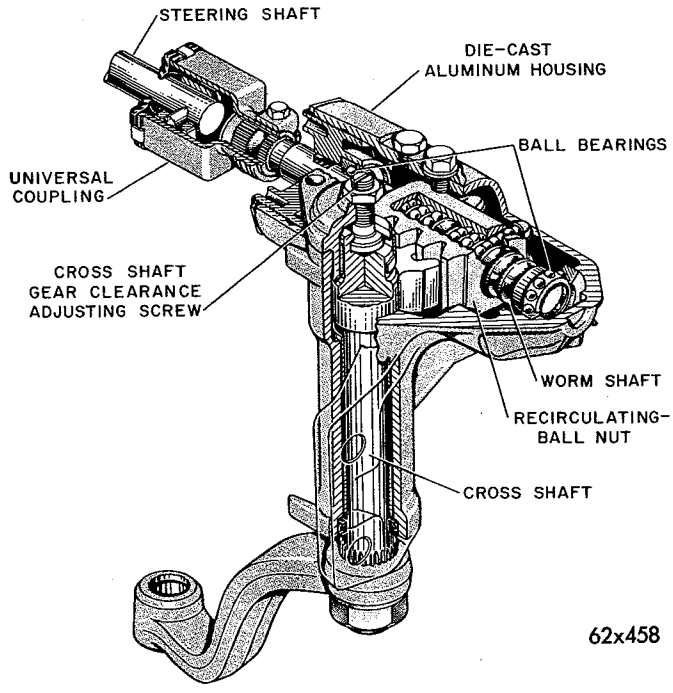


*Fig. 1—Steering Gear Cross Section*

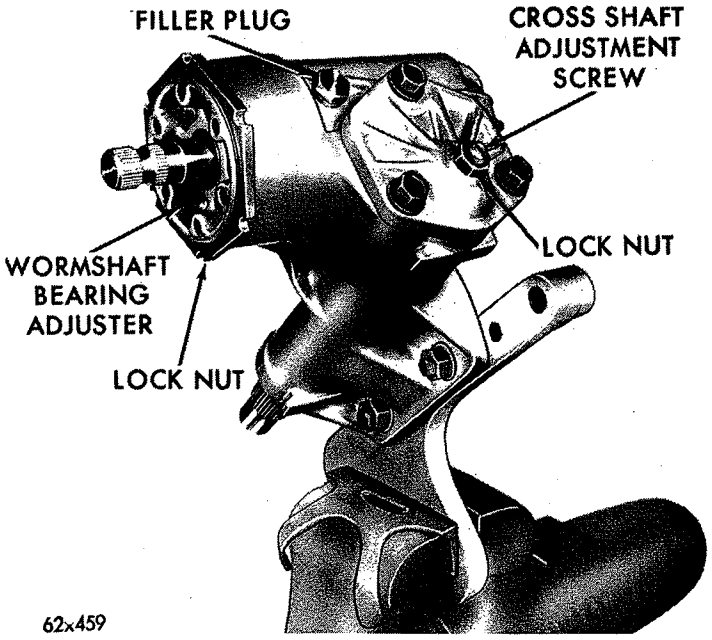


*Fig. 2—Steering Gear Adjustment Locations*

MyMopar.com

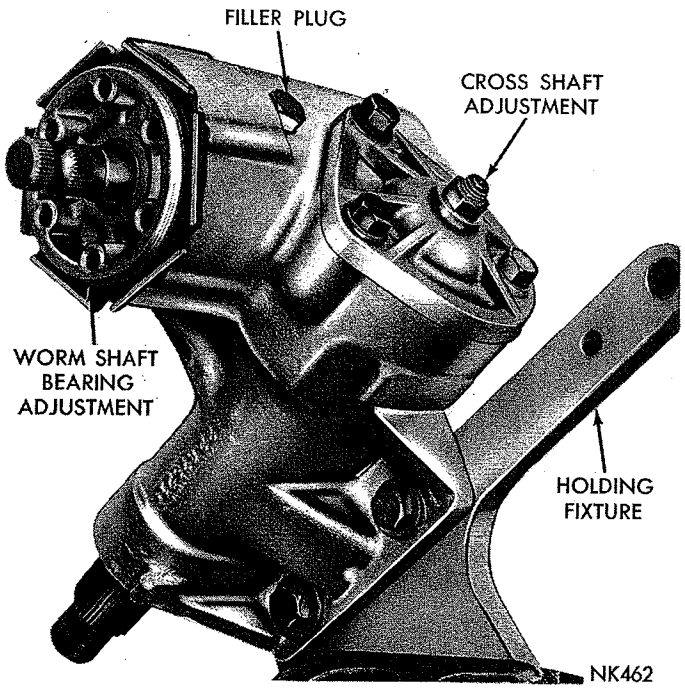


*Fig. 3—Steering Gear Adjustment Locations—Fury*

(a) Loosen adjuster lock nut.

(b) Use adjuster wrench from Tool C-3884 set and turn adjuster clockwise to increase pre-load, or counterclockwise to decrease pre-load.

(c) While holding adjuster from turning, tighten lock nut securely, then retest worm bearing pre-load.

### *Ball Nut Rack and Sector Mesh*

The cross shaft adjusting screw, located in housing cover, raises or lowers shaft to provide proper mesh load between tapered teeth of sector gear and tapered teeth of ball nut.

**This adjustment can be accurately made only after proper worm bearing preload has been established.**

(1) Turn steering wheel gently from one stop all the way to the other, carefully counting number of turns. Turn steering wheel back exactly half way, to center position.

(2) Turn cross shaft adjusting screw clockwise to take out all lash between ball nut rack and sector gear teeth, then tighten adjusting screw lock nut to 35 foot-pounds.

(3) Turn steering wheel about ¼ turn away from center of "high spot" position. Then, using torque wrench Tool C-3380, at steering wheel nut, measure torque required to rotate steering wheel through high spot at center position. The reading should be between 8¼ and 11¼ inch-pounds. This represents the total of worm shaft bearing pre-load and ball nut rack and sector gear mesh load. Readjust cross shaft adjustment screw if necessary, to obtain proper torque reading.

(4) After adjustments have been completed, place front wheels in a straight ahead position, and with steering gear and steering wheel centered, install steering arm on cross shaft.

(5) Tighten steering arm retaining nut to 120 foot-pounds.

## GEAR REMOVAL

### *All Models Except Valiant and Barracuda Equipped with 273 Cu. In. V-8 Engine*

**The manual steering gear can be removed without removing steering column assembly.**

(1) Remove steering arm retaining nut. Remove arm with Tool C-3646 (Fig. 4).

(2) Remove pin from coupling clamp at upper end of steering gear wormshaft.

(3) To provide sufficient clearance at coupling, loosen column jacket to instrument panel clamp bolts sufficient to disengage tab on clamp from slot in column jacket. Slide column assembly up far enough to disengage coupling from wormshaft.

**CAUTION: Care is required to avoid scratching the column jacket when sliding it up and down in the clamp assemblies.**

**It is necessary to disconnect shift linkage on models equipped with manual transmission and to remove floor plate to floor pan bolts when removing the steering gear. It will be necessary to realign steering column when reinstalling the gear.** See "Steering Column Alignment," Transmissions-Group 21.

(4) Remove the three steering gear housing mounting bolts and remove steering gear from vehicle. On models with 6 cylinder engines, steering gear can be removed through engine compartment. On models equipped with 8 cylinder engines steering gear can be removed from under vehicle.

### *Valiant and Barracuda Models Equipped with 273 Cu. In. V-8 Engine*

(1) Disconnect battery ground cable.

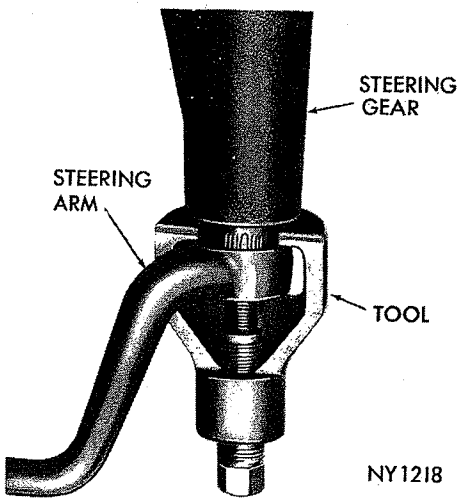


*Fig. 4—Removing Steering Gear Arm*

MyMopar.com

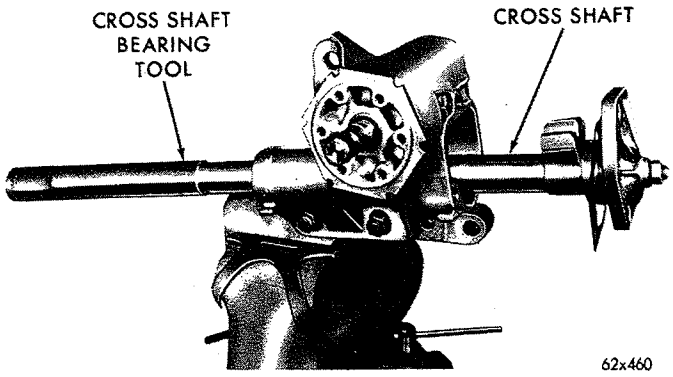


*Fig. 5—Removing Cross Shaft (Belvedere and Satellite)*

(2) Remove pin from coupling clamp at upper end of steering gear wormshaft. To provide sufficient clearance at coupling, loosen column jacket to instrument panel clamp bolts and slide column assembly up far enough to disengage the coupling from wormshaft.

(3) Raise vehicle and remove left front engine mount stud nut and washer. Use a suitable jack and raise engine slightly to provide clearance between left exhaust manifold and body sheet metal to allow removal of gear.

(4) Remove starting motor.

(5) Remove steering arm retaining nut and remove steering arm from cross shaft with puller Tool C-3646.

(6) Remove the three gear housing mounting bolts and remove gear from under vehicle.

## GEAR RECONDITIONING

Thoroughly clean entire outside surface of steering gear before disassembly to avoid contaminating wormshaft and ball nut assembly with dirt or grit.

(1) Attach steering gear to holding fixture Tool C-3323 and install holding fixture in a vise (Fig. 2).

(2) Loosen cross shaft adjusting screw lock nut, and back out screw about two turns to relieve load caused by close mesh between ball nut rack and sector gear teeth.

**Remove the cross shaft seal as outlined in "Cross Shaft Oil Seal Replacement."**

(3) Position steering wormshaft in straightahead position.

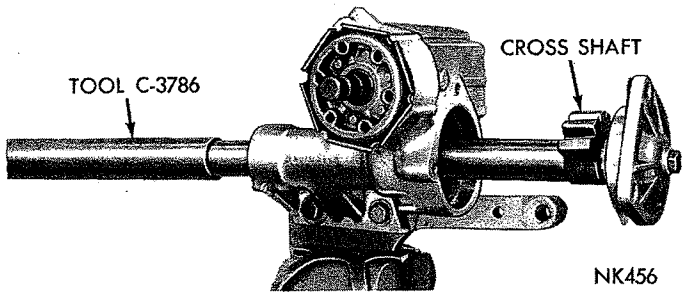


*Fig. 6—Removing Cross Shaft (Fury)*

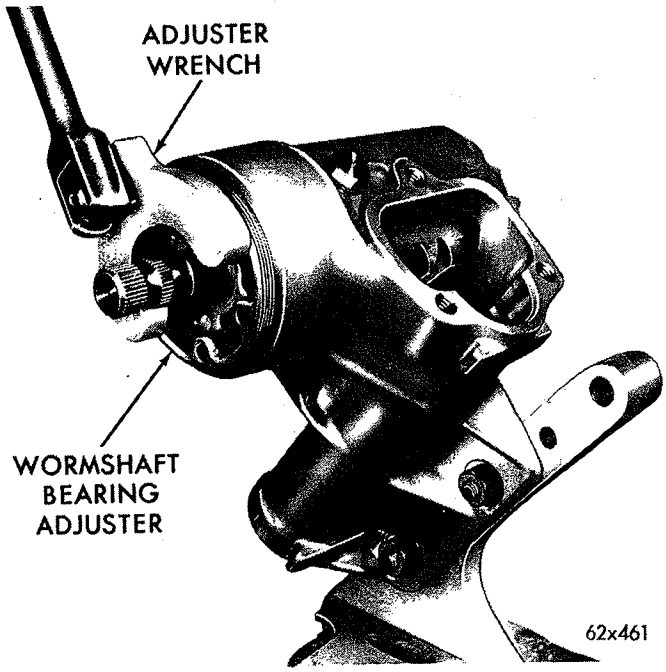


*Fig. 7—Removing Worm Shaft Adjuster*

(4) Remove bolts from cross shaft cover and slowly remove cross shaft while sliding arbor Tool C-3875 for Belvedere and Satellite models and Tool C-3786 for Fury models into housing (Figs. 5 and 6).

**The arbor tool is not necessary on Valiants and Barracuda 6 cylinder models.**

(5) Remove lock nut from cross shaft adjusting screw and remove screw from cover by turning screw clockwise.

(6) Slide adjustment screw and shim out of slot in end of cross shaft.

(7) Loosen wormshaft bearing adjuster lock nut with a soft drift and remove lock nut. Hold wormshaft from turning while unscrewing adjuster, using tool wrench from Tool Set C-3884 (Figs. 7 and 8).

(8) Slide wormshaft adjuster off shaft.

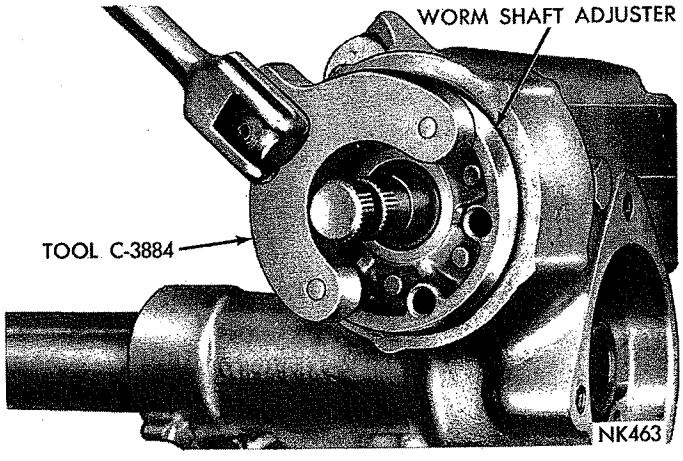


*Fig. 8—Removing Worm Shaft Adjuster—Fury*

MyMopar.com

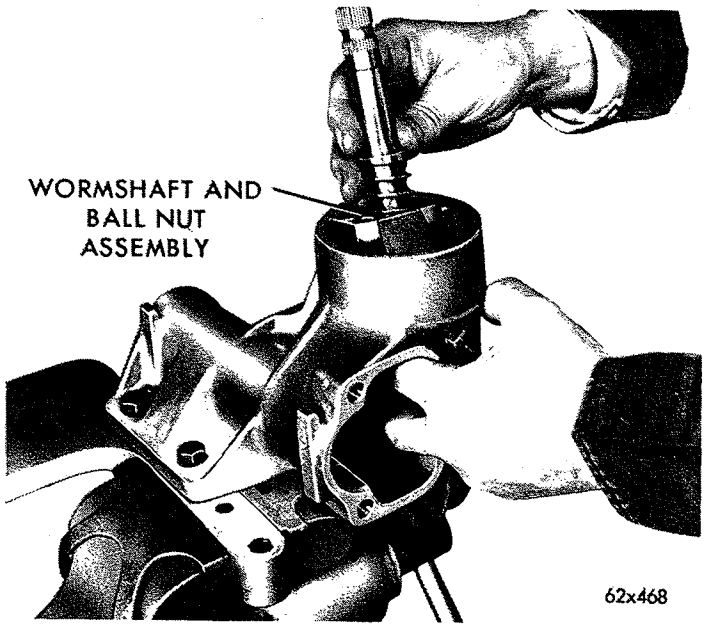


*Fig. 9—Removing Worm Shaft and Ball Nut Assembly*

**CAUTION: The adjuster must be handled carefully to avoid damage to aluminum threads.**

**Be careful that the ball nut does not run down to either end of the wormshaft as the ball guide ends can be damaged if the ball nut is allowed to rotate until stopped at the end of the worm.**

(9) Carefully remove worm and ball nut assembly (Fig. 9).

The ball nut and wormshaft are serviced as an assembly only, and are not to be disassembled. Do not remove or disturb ball return guides.

**Place ball nut and wormshaft assembly in a clean place.**

(10) Remove cross shaft needle bearing (if so equipped) by placing steering gear housing in an arbor press; insert Tool C-3875 for Belvedere and Satellite models and Tool C-3786 for Fury models with adapter ring in lower end of housing (Fig. 10) and press both bearings through housing. For Tool C-3786 no adapter ring is required.

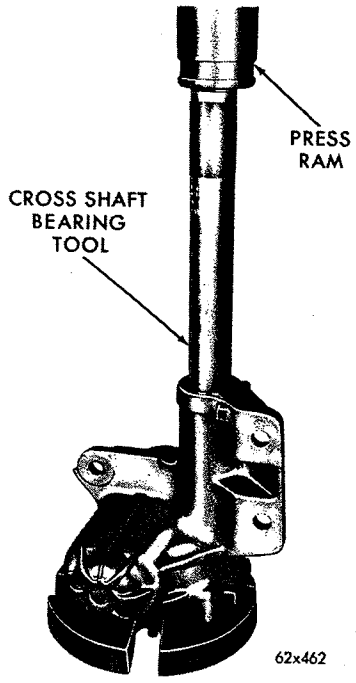


*Fig. 10—Removing Cross Shaft Inner and Outer Bearings*

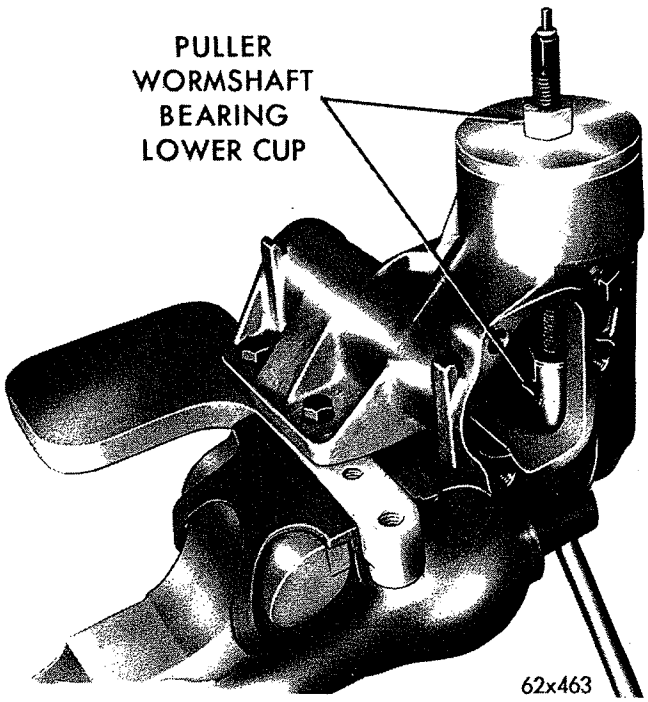


*Fig. 11—Removing Lower Bearing Cup (All Models Except Fury)*

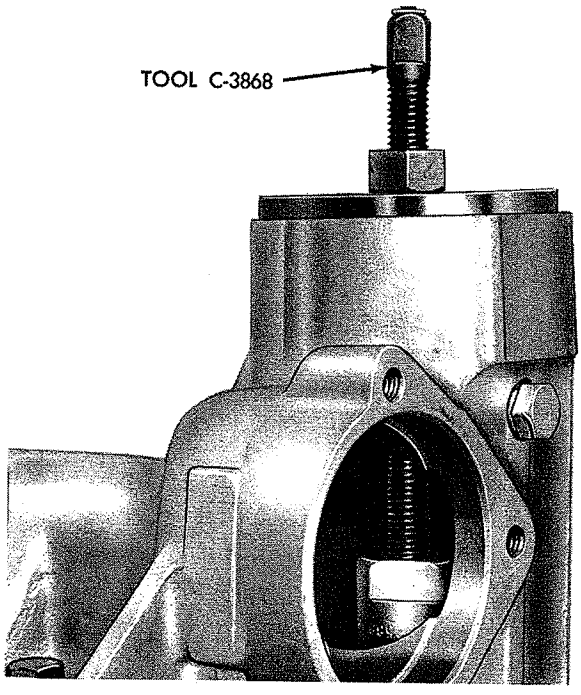


*Fig. 12—Removing Lower Bearing Cup (Fury)*

MyMopar.com

**CAUTION: The adapter ring must be used with remover and installer arbor Tool C-3875 otherwise bearings will be crushed.**

**Housings equipped with cross shaft bushings are serviced in assembly only. The cross shaft cover assembly, including a needle bearing or bushing, is serviced as an assembly.**

(11) Remove wormshaft oil seal from wormshaft bearing adjuster, by inserting a blunt punch behind seal and tap alternately on each side of seal until seal is driven out of adjuster.

(12) Remove wormshaft upper bearing cup for Belvedere, Satellite, Valiant and Barracuda models in same manner. For Fury models there is a spacer behind bearing cup. However, this must be done carefully to avoid cocking the bearing cup and distorting adjuster counterbore.

(13) Remove lower cup if replacement is necessary by positioning locking head jaws of remover Tool C-3868 (Figs. 11 and 12) behind the bearing cup and expanding remover head by pressing down on center plunger of tool. Withdraw bearing cup by turning remover screw nut in clockwise direction while holding center screw.

(14) Wash all parts in clean solvent and blow dry with compressed air.

(15) Test operation of ball nut assembly on wormshaft. If ball nut does not travel smoothly and freely on wormshaft and there is roughness or binding, assembly must be replaced.

(16) Extreme care is necessary when handling aluminum worm bearing adjuster to avoid damaging threads. It is equally important to avoid damaging

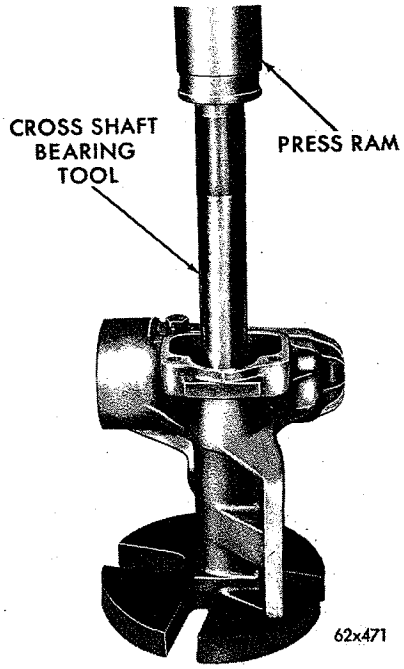


***Fig. 13—Pressing Lower Bearing into Housing (All Models Except Fury)***

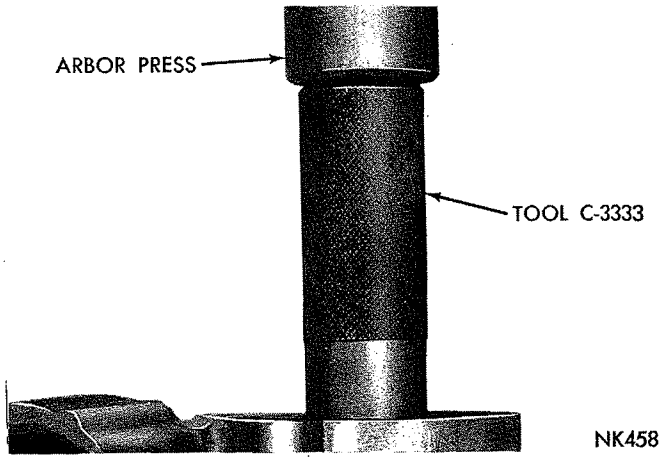


***Fig. 14—Pressing Lower Bearing into Housing (Fury)***

mating threads in gear housing. The wormshaft adjuster must **never** be screwed into housing without lubrication, or when threads are dirty or damaged. These precautions **must** be taken to avoid "picking up" threads and ruining the housing and/or wormshaft bearing adjuster.

(17) Inspect cross shaft for wear and check fit of shaft in housing bearings. Inspect fit of shaft pilot in its housing bearing in cover. Make sure the wormshaft has not been bent or otherwise damaged.

(18) Cross shaft and wormshaft oil seals should be replaced when unit is reconditioned.

(19) Install cross shaft outer needle bearing by placing bearing on end of Tool C-3875 for Belvedere and Satellite models and Tool C-3333 for Fury models with adapter ring. Press bearing into housing to 7/16 inch below end of bore for Belvedere and Satellite models and ½ inch below for Fury models to provide space for oil seal.

**CAUTION: The adapter ring must be used with remover and installer arbor Tool C-3875 for Belvedere and Satellite models and Tool C-3333 for Fury models, otherwise bearings will be crushed.**

(20) Install inner needle bearing by placing bearing on Tool C-3875 with adapter ring for Belvedere and Satellite models and Tool C-3333 for Fury models (Figs. 13 and 14). Press bearing into inside end of housing bore flush with inside end of bore surface.

(21) Install wormshaft bearing cups, position cups in housing and bearing adjuster nut. Then press them in place with Tool C-3865 (Figs. 15, 16, and 17).

(22) Install wormshaft oil seal by positioning seal in wormshaft adjuster with lip of seal up. Drive seal into place with a suitable sleeve so it is slightly below end of bore in adjuster.

(23) Apply a coating of steering gear lubricant to all moving parts during assembly, also place lubricant on and around oil seal lips.

(24) Clamp holding fixture and housing in a vise with bearing adjuster opening upward.

MyMopar.com

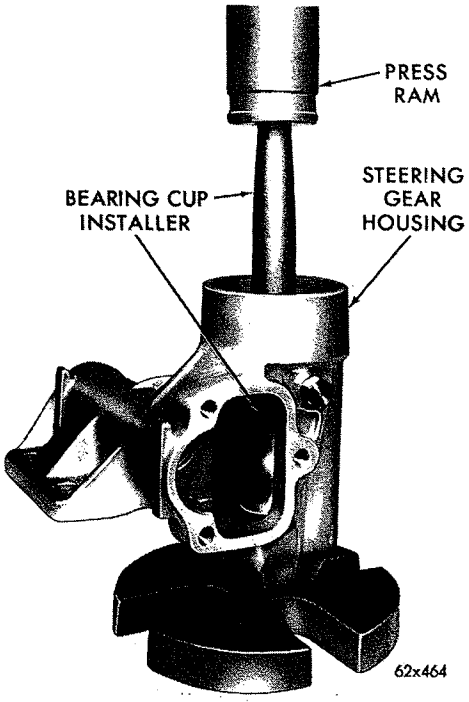


***Fig. 15—Installing Worm Shaft Lower Bearing Cup (All Models Except Fury)***

(25) Place a thrust bearing in lower cup in housing.

(26) Hold ball nut from turning (Fig. 9), and insert wormshaft and ball nut assembly into housing with end of worm resting in thrust bearing.

(27) Place upper thrust bearing on wormshaft. Thoroughly lubricate threads on adjuster and threads on housing.

(28) Place a protective sleeve of plastic tape over wormshaft splines so splines do not damage seal. Slide adjuster assembly over shaft.

(29) Thread adjuster into steering housing, and with Tool wrench C-3884 and splined nut set, tighten adjuster to 50 foot-pounds while rotating wormshaft. This is done to effectively seat bearings.

(30) Loosen adjuster so no bearing pre-load exists. Then, using torque wrench Tool C-3380, adjust wormshaft bearing pre-load from 1⅛ to 4½ inch-pounds.

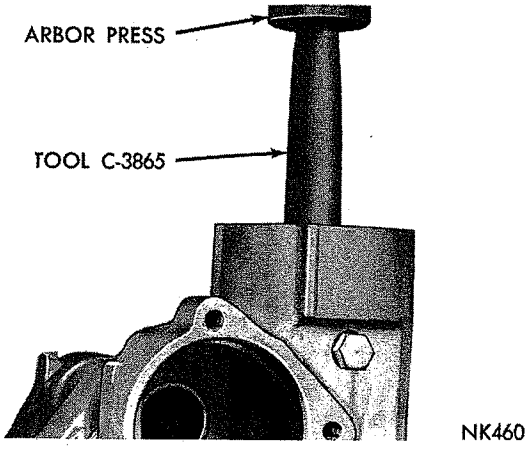


***Fig. 16—Installing Worm Shaft Lower Bearing Cup (Fury)***

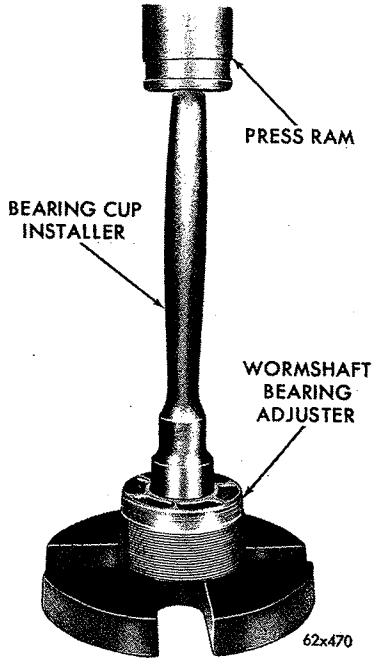


***Fig. 17—Installing Worm Shaft Upper Bearing Cup—Fury***

(31) After adjusting preload, tighten bearing adjuster lock nut, and retest to be sure preload remains between 1⅛ and 4½ inch-pounds.

(32) Before installing cross shaft, pack wormshaft cavities in housing above and below the ball nut with steering gear lubricant. Use steering gear lubricant whenever possible, but if not available, a good grade of multi-purpose lubricant may be used. Do not use gear oil. When gear is properly packed with steering gear lubricant it will contain eleven fluid ounces of lubricant, and level of lubricant will be at top of worm.

(33) Slide cross shaft adjusting screw and shim into slot in end of shaft.

(34) Test end clearance (Fig. 18). The screw must be free to turn with zero to .004 inch end play. Three different thickness shims are available to obtain specified clearance.

(35) Start cross shaft and adjuster screw into bearing in housing cover. Then, using a screw driver

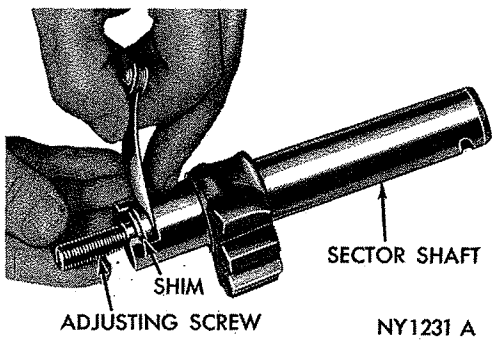


***Fig. 18—Checking Cross Shaft Adjusting Screw End Clearance***

MyMopar.com

through hole in cover, turn screw counterclockwise to pull shaft into cover.

(36) Install adjusting screw lock nut, but do not tighten at this time.

(37) Rotate wormshaft to centralize ball nut.

(38) Place new cover gasket on housing cover.

(39) Carefully install cross shaft and cover assembly into steering gear housing (Fig. 5).

**Coat the cross shaft and sector teeth with steering gear lubricant before installing cross shaft in housing.**

(40) Make certain some lash exists between cross shaft sector teeth and ball nut rack then install and tighten the cover bolts to 25 foot-pounds.

## GEAR INSTALLATION

### *All models except Valiant and Barracuda equipped with 273 Cu. In. V-8 Engine*

(1) Slide steering column assembly upward to where column coupling will clear end of wormshaft and permit installation of steering gear. Also make sure clamp is in place on steering shaft coupling.

**On models equipped with 6 cylinder engines steering gear can be entered through hood opening. However, when installing steering gear in models equipped with 8 cylinder engines, place the gear in position from underneath the vehicle.**

(2) Position steering gear and install the three mounting bolts.

(3) Tighten mounting bolts to 55 foot-pounds for Valiant, Barracuda, Belvedere and Satellite models and 80 foot-pounds for Fury models.

(4) With master serration on wormshaft aligned with notch mark on coupling housing, slide steering column assembly down far enough to engage column coupling with wormshaft.

(5) Align groove on steering column coupling with groove in wormshaft.

(6) Install coupling pin.

(7) While jacket clamp bolts are loose, position jacket assembly so steering shaft coupling is centered at midpoint of its travel.

The coupling travel midpoint can be determined by a 3/16" diameter gauge hole which is provided in steering shaft.

The dimension from the top of the coupling to the center of the gauge hole is 13/16 inch.

(8) After centering coupling, tighten column jacket to instrument panel clamp bolts to 95 inch-pounds.

**On vehicles equipped with manual transmission and concentric shift linkage, it will be necessary to readjust length of 1st and reverse shift rod and 2nd and 3rd shift rod after steering column assembly has been secured in position. See "Manual Transmission Linkage Adjustments." Group 21.**

(9) Turn steering gear and steering wheel to midpoint of its travel.

(10) Adjust as necessary. See "Ball Nut Rack and Sector Mesh Adjustment."

(11) Place front wheels in straight ahead position so master serrations in steering gear arm align with those on steering cross shaft.

(12) Install steering gear arm, lock washer and nut on cross shaft and tighten nut to 120 foot-pounds.

(13) After steering gear has been completely installed, test steering wheel to be sure it is centered in straight ahead position. If it is found to be off center with wheels straight ahead, adjust tie rods to center wheel. See Group 2, "Front Suspension."

### *Valiant and Barracuda Models Equipped with 273 Cu. In. V-8 Engine*

(1) From under vehicle, position gear on crossmember and install the three gear housing mounting bolts. Tighten bolts to 55 foot-pounds.

(2) Lower engine on front engine mount pads and install front engine mount stud nuts and washers. Tighten nuts to 75 foot-pounds.

(3) With master serration on wormshaft aligned with notch mark on coupling housing, slide steering column assembly down far enough to engage column coupling with wormshaft.

(4) Move coupling down wormshaft until it bottoms.

(5) Install coupling pin.

(6) While jacket clamp bolts are loose, position jacket assembly so steering shaft coupling is centered at midpoint of its travel.

The coupling travel midpoint can be determined by a 3/16" diameter gauge hole which is provided in the steering shaft.

The coupling is centered in its travel when dimension from top of coupling to center of gauge hole is 13/16 inch.

(7) After centering coupling, tighten column jacket to instrument panel clamp bolts to 95 inch-pounds.

**On vehicles equipped with manual transmission and concentric shift linkage, it will be necessary to readjust length of 1st and reverse shift rod and 2nd and 3rd shift rod after steering column assembly has**

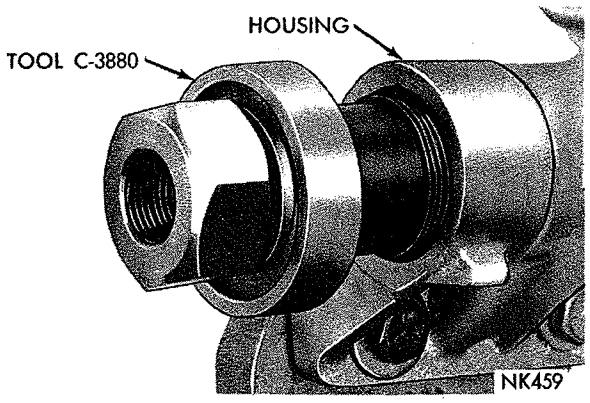


***Fig. 19—Removing Cross Shaft Oil Seal***

MyMopar.com

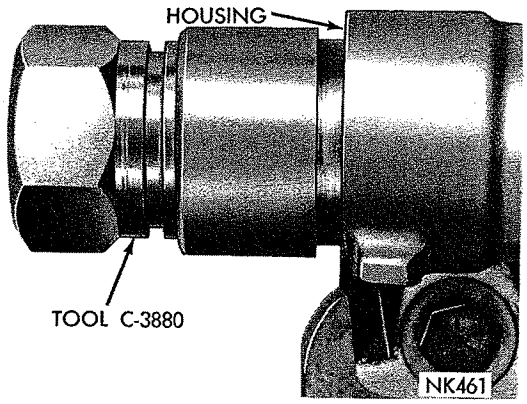


*Fig. 20—Installing Cross Shaft Oil Seal*

**been secured in position. See "Manual Transmission Linkage Adjustments," Group 21.**

(8) Turn steering gear and steering wheel to the midpoint of its travel.

(9) Adjust as necessary. See "Ball Nut Rack and Sector Mesh Adjustment."

(10) Place front wheels in straight ahead position so master serrations in steering gear arm align with those on steering cross shaft.

(11) Install steering gear arm, lock washer and nut on cross shaft and tighten nut to 120 foot-pounds.

(12) Install starting motor.

(13) Connect battery ground cable.

(14) After steering gear has been completely installed, test steering wheel to be sure it is centered in straight ahead position. If it is found to be off center with wheels straight ahead, adjust the tie rods to center the wheel. See Group 2, "Front Suspension."

## CROSS SHAFT OIL SEAL REPLACEMENT

The cross shaft oil seal may be replaced by the following procedure either on bench, or without removing steering gear from the vehicle.

**When replacing oil seal in vehicle clean exposed portion of cross shaft to help prolong oil seal life.**

(1) Tool C-3880 is used for service of cross shaft seal. For Valiant, Barracuda, Belvedere and Satellite models, use adapter SP-3609, half-rings SP-1932 and nut SP-3610. For Fury models use adapter SP-3056 in place of SP-3609.

Slide threaded adapter of Tool C-3880 over end of cross shaft and install nut portion of tool on shaft (Fig. 19). Maintain pressure on adapter with tool nut while screwing the adapter into seal until it grips oil seal firmly. Place two half rings and retainer over both portions of tool. Turn tool nut counterclockwise to withdraw seal from housing.

(2) Place seal onto splines on cross shaft with lip of seal facing gear housing.

(3) Place installing adapter from Tool C-3880 against seal. For Valiant, Barracuda, Belvedere and Satellite models use adapter SP-3828 with **short step end** toward seal (Fig. 20). For Fury models use adapter SP-3052.

(4) For Valiant Barracuda Belvedere and Satellite models, place the nut down (from Tool set C-3880) on cross shaft, and turn it down against adapter, pressing seal into housing until step on adapter contacts end of housing. For Fury models, press in seal until a gap of ¼ inch exists between adapter and housing.

# SPECIFICATIONS

| | |
|---|---|
| STEERING (Manual) | |
| Type | Recirculating Ball Nut |
| Ratio | 24 to 1 |
| Cross Shaft Bearings | 3-Needle Bearings |
| Cross Shaft Bearings Valiant Barracuda 6 cylinder models | 3-Bronze Bushings |
| Wormshaft Bearings | 2-Caged Ball Bearings |
| Cross Shaft Adjusting Screw End Play | .000-.004 Inch |
| Worm Bearing Pre-Load (in vehicle) | 1½ to 4½ in. lbs. to Keep Wheel Moving |
| Worm Bearing Pre-Load (out of vehicle) | 1½ to 4½ lbs. to Keep Wheel Moving |
| Sector Mesh Adjustment Pre-Load Torque— Includes Worm Bearing Pre-Load (in vehicle) | 8¼ to 11¼ in. lbs. Pull through high spot |
| Sector Mesh Adjustment Pre-Load Torque— Includes Worm Bearing Pre-Load (out of vehicle) | 7⅞ to 11¼ in. lbs. Pull through high spot |

MyMopar.com

# TIGHTENING REFERENCE

| | FOOT POUNDS |
|---|---|
| Cross Shaft Cover Bolt | 25 |
| Steering Arm Nut | 120 |
| Gear Assembly to Frame Bolt All Except Fury Models | 55 |
| Fury | 80 |
| Steering Wheel Nut | 24 |
| Cross Shaft Adjusting Screw Lock Nut | 35 |

# POWER STEERING

## INDEX


| | Page |
|---|---|
| General Information | 10 |
| Service Diagnosis | 10 |
| Service in Vehicle | 12 |
| Gear Shaft Adjustment | 12 |
| Gear Shaft Oil Seal Replace | 14 |
| Valve Body Recondition | 12 |
| Service Out of Vehicle | 15 |
| Final Tests and Adjustments | 21 |
| Gear Reconditioning | 15 |
| Installation | 22 |
| Removal | 15 |
| Worm Shaft Oil Seal Replace | 23 |
| Specifications | 23 |
| Tightening Reference | 24 |


## GENERAL INFORMATION

The power steering gear (Figs. 1 and 2) consists of a gear housing containing a gear shaft with sector gear, a power piston with gear teeth broached into the side of the piston which is in constant mesh with the gear shaft sector, and a wormshaft connecting the steering wheel to the power piston through a U-joint type coupling. The wormshaft is geared to the piston through recirculating ball contact. The steering valve, mounted on top of the steering gear, directs the flow of fluid in the system.

Fluid is supplied to the steering gear, by an engine driven constant displacement slipper type pump through a pressure hose. Oil is returned to the pump reservoir from the steering gear through a return hose.

## SERVICE DIAGNOSIS

| Condition | Possible Cause | Correction |
|---|---|---|
| **HARD STEERING** | (a) Tires not properly inflated. | (a) Inflate tires to recommended pressures. |
| | (b) Low oil level in pump reservoir (usually accompanied by pump noise). | (b) See "Fluid Level," Power Steering Pump. |
| | (c) Loose pump belt. | (c) See "Group 7—Cooling." |
| | (d) Improper caster and camber. | (d) See "Front Wheel Alignment" Front Suspension Group 2. |
| | (e) Power steering output low. | (e) Perform the "Pump Pressure and Flow Tests." |
| | (f) Steering linkage binding. | (f) Repair and lubricate as necessary. |
| | (g) Steering gear malfunctions. | (g) Adjust or repair as follows: |
| | 1. Gear shaft adjustment too tight. | 1. See "Gear Shaft Adjustment." |
| | 2. Faulty or damaged valve lever. | 2. Remove steering gear, repair as necessary. |
| | 3. External leakage. | 3. Inspect for leakage at the lower sector shaft oil seal; the sector shaft cover "O" ring. |
| | 4. Excessive internal leakage. | 4. Remove steering gear and repair as necessary. |
| **POOR RECOVERY FROM TURNS** | (a) Tires not properly inflated. | (a) Inflate tires to recommended pressures. |
| | (b) Steering linkage binding. | (b) Repair and lubricate as necessary. |
| | (c) Improper wheel alignment. | (c) See "Front Wheel Alignment," Front Suspension Group 2. |
| | (d) Damaged steering tube bearing. | (d) Remove jacket tube and replace bearings. |
| | (e) Steering wheel column jacket and steering nut improperly aligned. | (e) See "Gear Installation." |

MyMopar.com

| Condition | Possible Cause | Correction |
|---|---|---|
| | (f) Steering gear malfunctions.<br>1. Improper gear shaft adjustment.<br>2. Column support spanner nut loose.<br>3. Damaged valve lever.<br>4. Improper worm thrust bearing adjustment.<br>5. Worn or damaged cylinder head worm seal ring or faulty worm piston ring.<br>6. Burrs or nicks in the reaction ring grooves in the cylinder head or column support.<br>7. Dirt or chips in the steering gear unit.<br>8. Rough worm in the piston assembly. | (f) Adjust or repair as follows:<br>1. See "Gear Shaft Adjustment."<br>2. Remove steering gear, disassemble, inspect and reassemble as outlined in this section.<br>3. Remove steering gear and repair as necessary.<br>4. Remove steering gear, disassemble, inspect and reassemble. See "Gear Reconditioning."<br>5. See "Steering Gear Removal, Disassembly and Inspection," replace parts as necessary. See "Gear Reconditioning."<br>6. Remove steering gear and repair as necessary.<br>7. Remove steering gear, disassemble completely, clean in a clean solvent, inspect and make repairs as necessary.<br>8. Replace worm and piston assembly. See "Gear Reconditioning." |
| **CAR LEADS TO EITHER SIDE** | (a) Tires not properly inflated.<br>(b) Improper wheel alignment.<br>(c) Valve body out of adjustment.<br>(d) Valve lever damaged.<br>(e) Column support spanner nut loose.<br>(f) Coupling not centered. | (a) Inflate tires to recommended pressures; See "Wheels and Tires."<br>(b) See "Front Suspension, Front Wheel Alignment." Group 2.<br>(c) If vehicle leads to the left, move the steering valve housing down on the steering housing. If vehicle leads to the right, move the steering valve housing up on the steering housing.<br>(d) Remove steering gear and replace or repair as necessary.<br>(e) Remove steering gear and repair as necessary.<br>(f) Center coupling. Refer to "Gear Installation." |
| **EXCESSIVE STEERING WHEEL FREE-PLAY** | (a) Improper gear shaft adjustment.<br>(b) Column support spanner nut loose.<br>(c) Improper worm thrust bearing adjustment.<br>(d) Coupling loose on the worm shaft. | (a) See "Gear Shaft Adjustment."<br>(b) Remove the steering gear, disassemble, inspect, and reassemble.<br>(c) Remove the steering gear, disassemble, inspect and reassemble, See "Gear Reconditioning."<br>(d) Inspect wormshaft splines for wear. |
| **LACK OF ASSIST (One Direction)** | (a) Oil leaking past worm shaft oil seal ring.<br>(b) Broken or worn ring on worm piston.<br>(c) Piston end plug loose.<br>(d) Reaction seal missing. | (a) Remove steering gear, disassemble, inspect and replace the parts as necessary.<br>(b) See "Gear Reconditioning."<br>(c) Replace the worm and piston assembly.<br>(d) Remove the steering gear and repair as necessary. |
| **LACK OF ASSIST (Both Directions)** | (a) Pump belt slipping.<br>(b) Pump output low.<br>(c) Broken or worn ring on worm piston.<br>(d) Piston end plug loose. | (a) See Group 7.<br>(b) Perform the "Pump Pressure and Flow Tests," also refer to correction (e) in Diagnosis under "Hard Steering."<br>(c) See "Gear Reconditioning."<br>(d) Replace the worm and piston assembly. |

MyMopar.com

| Condition | Possible Cause | Correction |
|---|---|---|
| | (e) Internal leakage in the steering gear valve body. | (e) Replace the steering gear valve body assembly. |
| **TEMPORARY INCREASES IN EFFORT WHEN TURNING STEERING WHEEL TO THE RIGHT OR LEFT** | (a) Oil level low in pump reservoir. | (a) See "Fluid Level." |
| | (b) Loose pump belts. | (b) See "Group 7—Cooling." |
| | (c) Oil on pump belt. | (c) Replace the belt and adjust. |
| | (d) Binding steering linkage. | (d) Lubricate and repair as necessary. |
| | (e) Engine idle too slow. | (e) See "Fuel Specifications." Group 14. |
| | (f) Air in the system. | (f) Work the steering wheel from right to left until the air is expelled. |
| | (g) Power steering pump output low. | (g) See Diagnosis "Hard Steering" correction (e). |
| | (h) Gear malfunction. | (h) Adjust and repair as outlined under "Hard Steering"—condition and correction (g). |
| **NOISES** | (a) Buzzing noise in neutral and stops when the steering wheel is turned. | (a) Noisy pump, make pressure test and repair as necessary. Damaged hydraulic lines or interference of the hoses with components attached to the fender shield. Air in system; work steering wheel from right to left until the air is expelled. |
| | (b) Chucking noise. Cause as follows:<br>1. Improper gear shaft adjustment.<br>2. Improper worm shaft thrust bearing adjustment.<br>3. Coupling loose on the worm shaft.<br>4. Worn worm and piston assembly. | (b) Correct as follows:<br>1. See "Gear Shaft Adjustment."<br>2. Remove steering gear, disassemble, inspect and reassemble.<br>3. Inspect worm shaft splines for wear. Inspect coupling bolt for tightness, if loose, replace bolt and inspect wormshaft and coupling.<br>4. Replace worm and piston assembly. |
| | (c) Metallic clatter or tapping noise. | (c) Replace back pressure valve cushion. |
| | (d) Knocking condition at the bracket stop when the engine is running. | (d) Rubber stop worn or missing from pump bracket. |
| | (e) Loose pump belt. | (e) See Group 7 Cooling. |

## SERVICE PROCEDURES

### SERVICE IN VEHICLE

#### *Gear Shaft Adjustment*

(1) Disconnect center link from steering gear arm.

(2) Start engine and run at idle speed.

(3) Turn steering wheel gently from one stop all the way to the other, counting number of turns. Then turn wheel back exactly half way, to center position.

(4) Loosen adjusting screw until backlash is evident in steering gear arm. Feel backlash by holding end of steering gear arm between thumb and forefinger with a light grip. Do not "grasp" steering gear arm with whole hand. Tighten adjusting screw until backlash just disappears.

Continue to tighten to ⅜ to ½ turn from this position and tighten lock nut to 50 foot-pounds to maintain this setting.

#### *Valve Body Recondition*

(1) Disconnect high pressure and return hoses at the valve body and tie the ends above the reservoir level.

(2) Remove two screws attaching valve body to main gear housing.

(3) Lift valve body upward to disengage from valve lever (Fig. 8).

(4) Remove the two screws attaching control valve body to steering valve body and separate two bodies (Fig. 3).

(5) Compress control valve spring and remove retainer pin, spring, valve piston and cushion spring.

(6) Carefully shake out spool valve and inspect for nicks, burrs and scores. Do not remove valve body end plug unless inspection indicates a leak at gasket.

**If spool valve or valve body is damaged, replace valve and body assembly.**

Small burrs and nicks may be removed with crocus cloth if extreme care is used not to round off sharp edges of valve. The sharp edge is vitally important to operation of this valve.

(7) Clean valve bodies and valve piston thoroughly

MyMopar.com

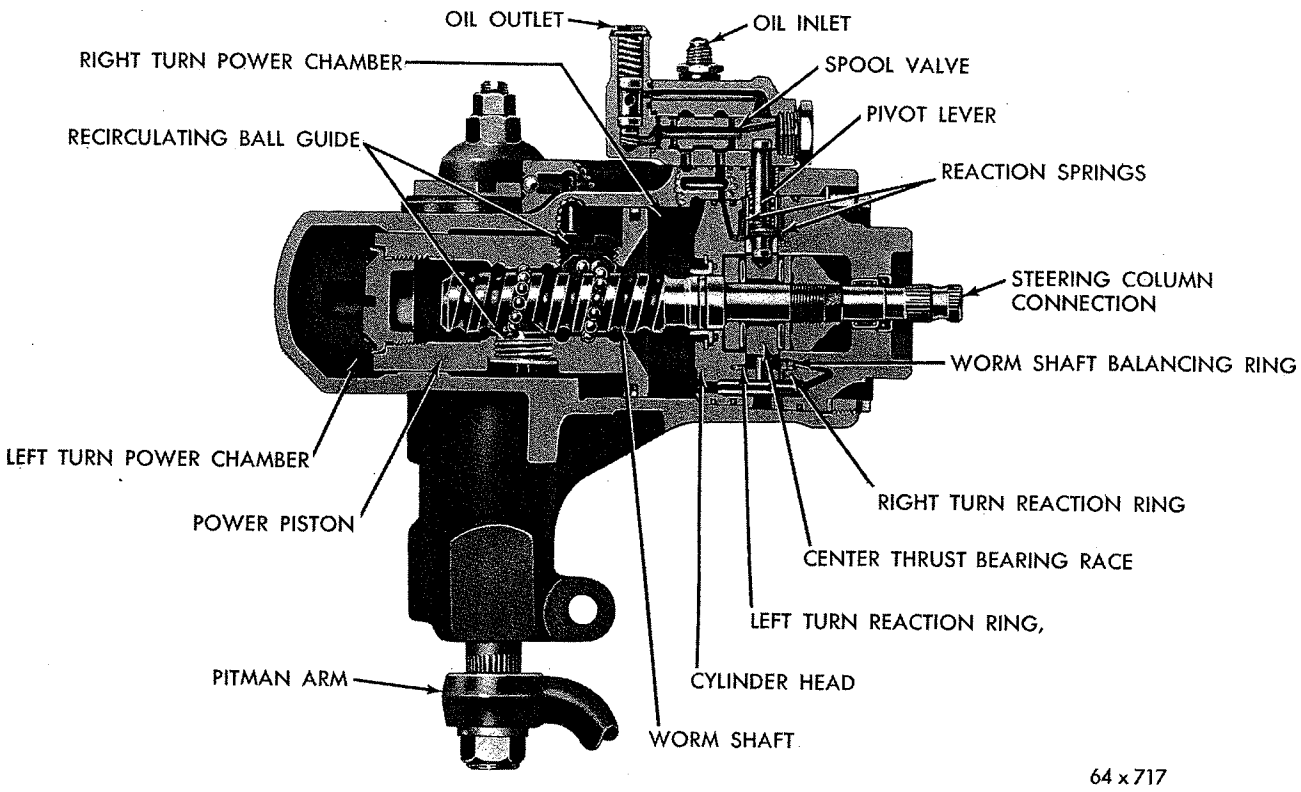


***Fig. 1—Power Steering Gear (Sectional View)***

in clean solvent. Blow out all passages with compressed air. Lubricate pistons and bores with power steering fluid.

(8) Install steering spool valve in valve body so valve lever hole is aligned with lever opening in valve body. Valve must be perfectly free in valve body without sticking or binding (Fig. 3).

(9) Install a new gasket on end plug (if removed). Tighten plug to 25 foot-pounds.

(10) Install piston cushion spring in control valve body being sure it seats in counterbore at bottom of housing. Lubricate piston and insert nose end of piston into body bore. Test for smooth operation. Be sure cushion spring is not cocked.

(11) Install spring on top of piston, compress spring and install retaining pin.

(12) Position two new "0" rings on control valve body and attach to steering valve body. Tighten the two attaching screws to 95 inch-pounds.

(13) If pressure inlet fitting has been removed, tighten fitting to 30 foot-pounds.

(14) Align lever hole in valve spool with lever opening in valve body.

(15) Install a gear housing making sure the valve lever enters hole in valve spool and key section on bottom of valve body nests with the keyway in housing.

**CAUTION: These parts should go together with relative ease. Use of force may damage the lever. If they do not go together easily, lift off valve assembly, re-**

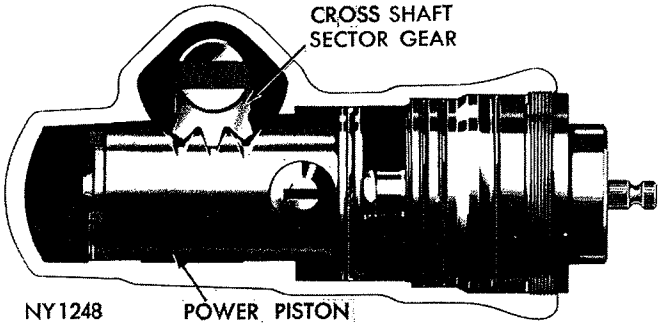


***Fig. 2—Steering Gear Housing (Sectional View)***

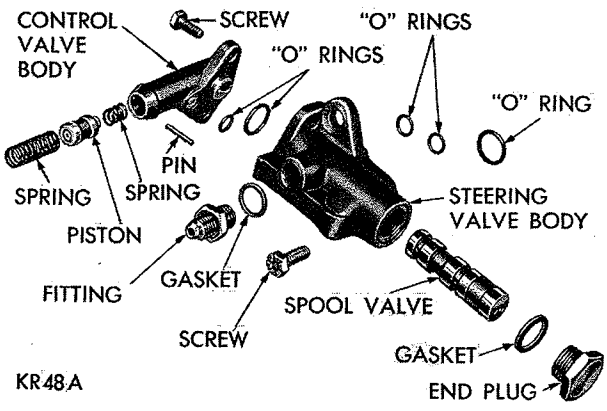


***Fig. 3—Valve Body (Disassembled View)***

MyMopar.com

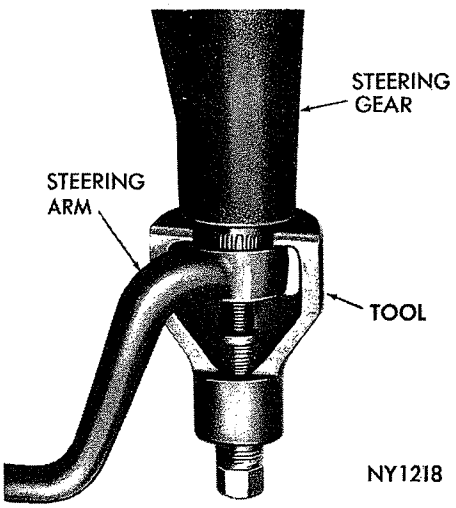


*Fig. 4—Removing Steering Gear Arm*

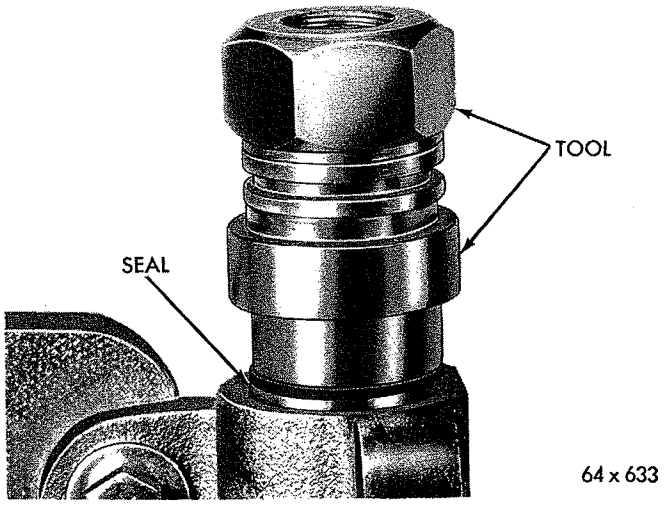


*Fig. 6—Installing Gear Shaft Inner Oil Seal*

**align valve spool hole with lever opening in valve body and install valve body.**

(16) Install two screws and tighten to 7 foot-pounds to prohibit leakage during valve centering operation.

(17) Connect high pressure and return hoses to valve body.

(18) Start the engine. If the unit is self-steering tap the valve up or down to correct. **When tapping valve "down," hit valve body on end plug. When tapping valve "up," tap on head of the screw attaching the valve body to main valve body. Do not hit control valve body.**

(19) Turn steering wheel from stop to stop several times to expel air from system. Refill reservoir as required.

**CAUTION: Do not turn hard against ends of travel. This will generate high pressure and may blow out the "O" rings since the valve body screws have not been finally tightened.**

(20) With steering wheel in straight ahead center position, start and stop the engine several times, tapping the valve body up or down as required until there is no movement of the steering wheel when the engine is both started or stopped.

(21) The valve is now centered. Tighten the two screws attaching valve body to housing to 200 inch-pounds.

### *Gear Shaft Oil Seal Replace*

The gear shaft oil seal may be replaced without removing the steering gear from the vehicle.

(1) Remove steering arm nut.

(2) Disconnect steering gear arm from sector shaft with Tool C-3646 (Fig. 4).

(3) Slide threaded adapter SP-3609 of Tool C-3880 over end of gear shaft and thread tool nut SP-3610 on gear shaft. Maintain pressure on threaded adapter with tool nut while screwing adapter far enough to engage metal portion of grease retainer. Place the two half rings SP-1932, and Tool retainer ring over both portions of the Tool (Fig. 5). Turn the tool nut counter-clockwise to withdraw grease retainer from housing.

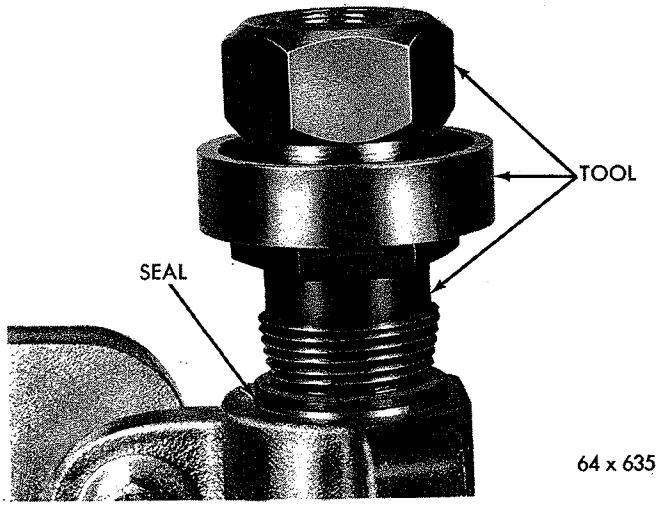


*Fig. 5—Removing Gear Shaft Oil Seal*

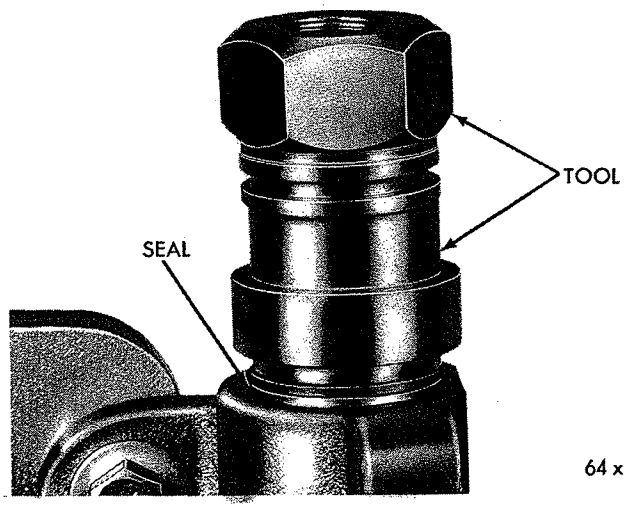


*Fig. 7—Installing Gear Shaft Grease Retainer*

MyMopar.com

(4) Remove oil seal snap ring with pliers Tool C-3229 and remove seal back-up washer.

(5) Use Tool C-3880 in same manner as outlined in step (3) to remove inner seal.

(6) Place tool adapter SP-3828 with long step of adapter against new seal and slide it over shaft with seal lip toward housing (Fig. 6). Install tool nut on gear shaft and tighten tool nut until shoulder of tool adapter contacts gear housing.

(7) Remove tool nut and adapter and install seal back-up washer and oil seal snap ring with sharp edge out.

(8) Position grease retainer in housing bore. Place tool adapter SP-3828 with short step of lip against seal (Fig. 7). Install tool nut on gear shaft and tighten tool nut until shoulder of tool adapter contacts gear housing.

(9) Place steering gear and front wheels in straight ahead position and install steering gear arm and nut.

(10) Tighten steering gear arm nut to 120 foot-pounds.

## SERVICE OUT OF VEHICLE

### Gear Removal

### Six Cylinder - All Except Fury Models

(1) Disconnect battery ground cable.

(2) Remove steering column coupling to wormshaft roll pin.

(3) Loosen column jacket clamp bolts at instrument panel, and pull column up about 2 inches.

(4) Tap coupling assembly upward and carefully lift off the end of wormshaft.

**Tie the column jacket tube to portect it against damage during the steering gear removal.**

(5) Disconnect pressure and return hoses at steering gear valve. Fasten ends of the hoses above oil level in pump reservoir and cap ends of hoses and fittings of steering valve.

(6) Raise the vehicle.

(7) Remove gear shaft nut and washer and remove steering arm from gear shaft with Tool C-3646.

(8) Remove bolts attaching steering gear to frame and remove steering gear assembly through engine compartment.

### Eight Cylinder - All Except Fury Models

(1) Disconnect battery ground cable.

(2) Remove roll pin in coupling clamp at upper end of steering gear wormshaft. To provide sufficient clearance at coupling, loosen column jacket to instrument panel clamp bolts and slide column assembly up far enough to disengage coupling from wormshaft.

(3) Disconnect two hoses at control valve.

(4) On Valiant and Barracuda models, raise vehicle and remove left front engine mount stud nut and washer. Use a suitable jack and raise engine slightly to provide clearance between left exhaust manifold and body sheet metal to allow removal of gear.

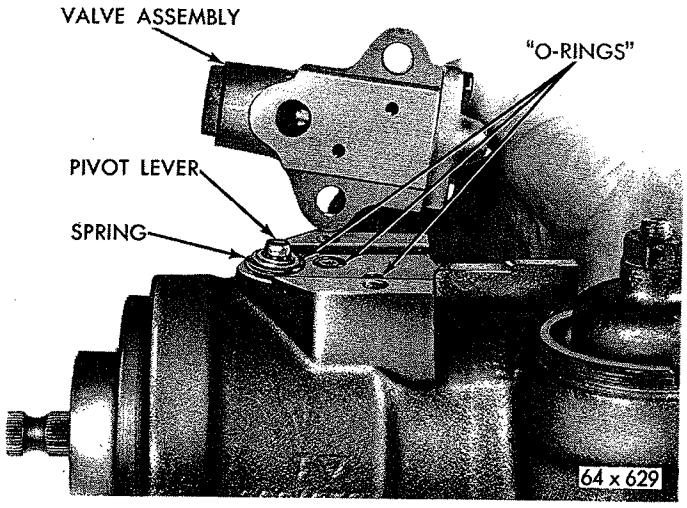


*Fig. 8—Removing Valve Body Assembly*

(5) Remove starting motor.

(6) Remove steering arm retaining nut and remove steering arm from cross shaft with remover, Tool C-3646.

(7) Remove three gear housing mounting bolts and remove gear from under vehicle.

### Fury Models

(1) Disconnect battery ground cable.

(2) Disconnect pressure and return hoses at steering gear. Fasten ends of the hoses above oil level in pump reservoir.

(3) Remove rubber coupling heat shield.

(4) Remove the two nuts and bolts retaining rubber coupling to flange of intermediate shaft.

(5) Remove roll pin attaching rubber coupling upper flange to steering column shaft.

(6) Tap rubber coupling upward as far as it will go onto steering column shaft splines.

(7) Remove roll pin attaching pot coupling to power steering worm shaft.

(8) Move intermediate shaft until upper flange clears rubber coupling and withdraw from worm shaft splines.

(9) Remove steering gear arm using Tool C-3646 (Fig. 4).

**CAUTION: Do not remove the steering arm by prying with a lever or striking with a hammer as serious steering gear internal damage may result.**

(10) Remove the three bolts that mount steering gear to crossmember and remove gear from under vehicle.

### Gear Reconditioning

Clean the gear assembly thoroughly in a suitable solvent and install unit in holding fixture Tool C-3323.

(1) Drain steering gear through the pressure and return connections by turning steering wormshaft

MyMopar.com

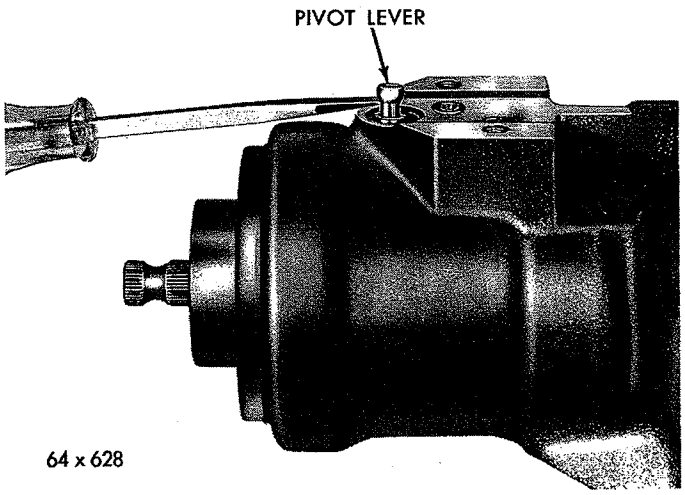


*Fig. 9—Remove Pivot Lever*

from one extreme of travel to the other.

(2) Remove valve body attaching screws, and remove valve body and three "O" rings (Fig. 8).

(3) Remove pivot lever and spring. Pry under spherical head with a screw driver (Fig. 9).

**CAUTION: Use care not to collapse slotted end of the valve lever as this will destroy the bearing tolerances of the spherical head.**

(4) Remove gear shaft grease retainer and oil seal as outlined in "Gear Shaft Oil Seal Replacement."

(5) Loosen gear shaft adjusting screw locknut and remove gear shaft cover spanner nut with Tool C-3633 (Fig. 10).

(6) Rotate wormshaft to position gear shaft sector teeth at center of piston travel. Loosen steering power train retaining nut with Tool C-3634 (Fig. 11).

(7) Position holding Tool C-3323 so sector shaft is in a horizontal position. Place Tool C-3875 on threaded end of gear shaft and slide tool into housing until both tool and shaft are engaged with bearings.

(8) Turn wormshaft to full left turn position to

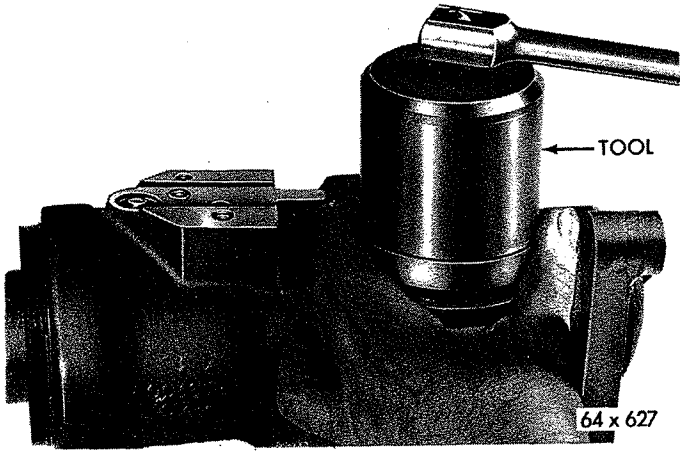


*Fig. 10—Removing Gear Shaft Cover Retaining Nut*

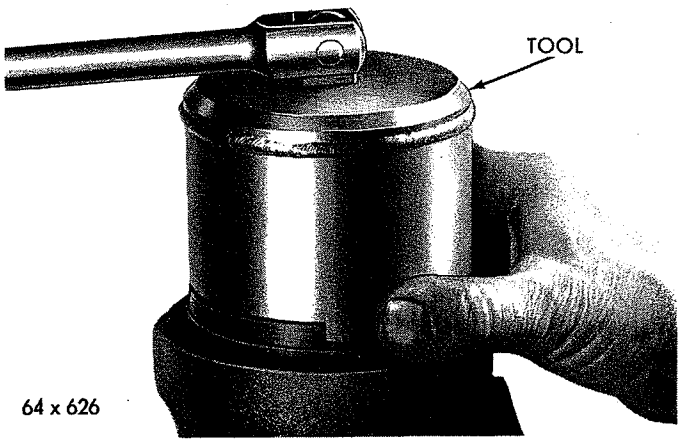


*Fig. 11—Removing Power Train Retaining Nut*

compress power train parts. Remove power train retaining nut with Tool C-3634 (Fig. 11). Remove housing head tang washer.

(9) While holding power train firmly compressed, pry on piston teeth with a screw driver using gear shaft as a fulcrum and remove complete power train (Fig. 12).

**It is important that the cylinder head, center race and spacer assembly and the housing head be maintained in close contact with each other. This will eliminate the possibility of the reaction rings becoming disengaged from their grooves in both the cylinder head and housing head. It will prohibit the center spacer from becoming separated from the center race and becoming "cocked" in the housing which may make it impossible to remove the power train without damaging the spacer, the housing, or both.**

(10) Place power train vertically in a vise equipped with soft jaws to avoid damaging piston assembly. See Fig. 13 for parts identification.

**The 33 worm bearing needle rollers will fall out when the housing head is removed from the wormshaft. Use arbor Tool C-3929 (Fig. 14) to hold rollers**

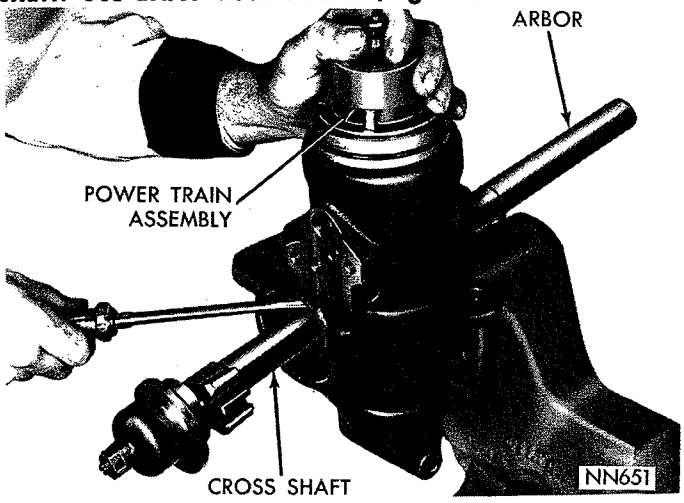


*Fig. 12—Removing Power Train*

MyMopar.com

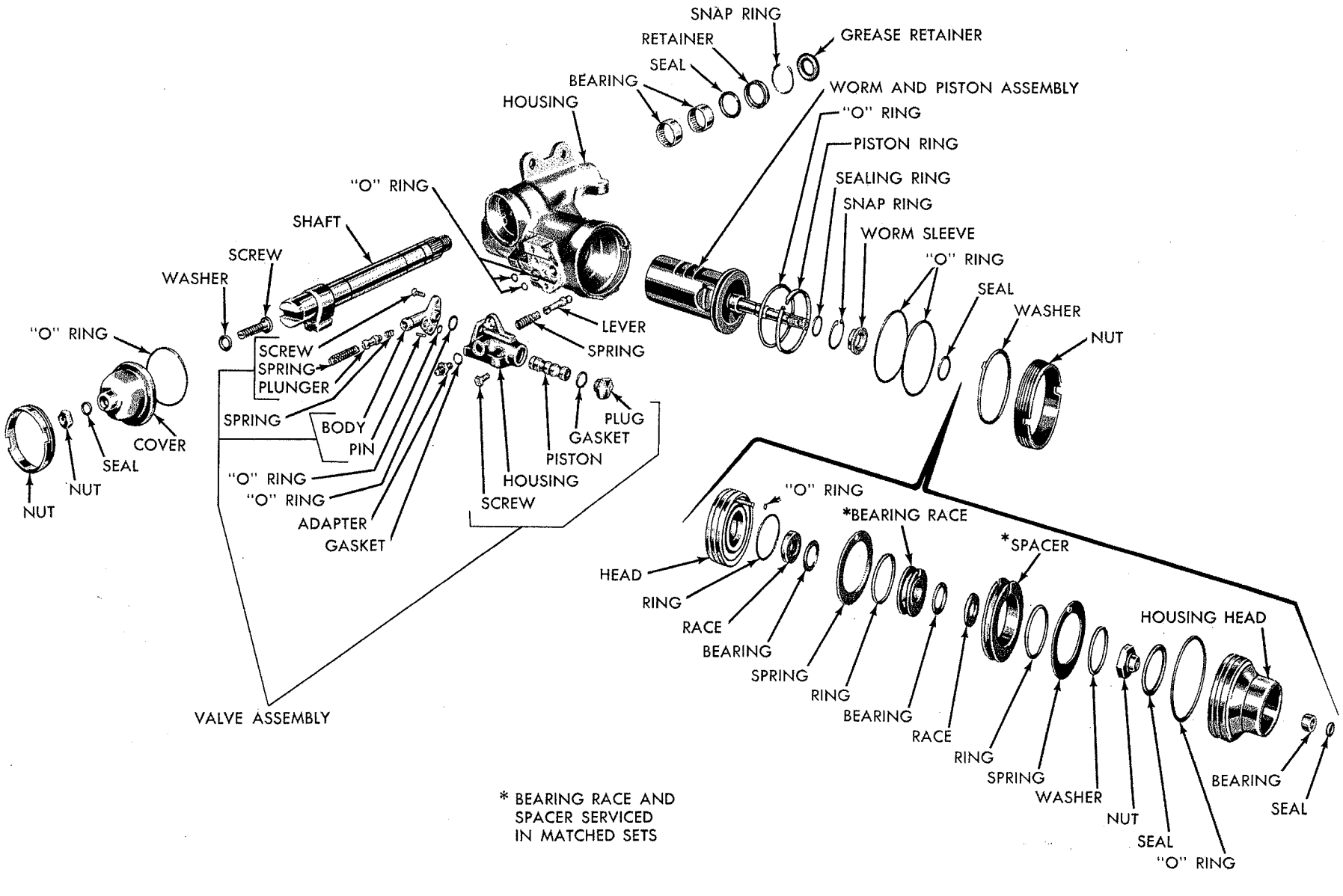


***Fig. 13—Steering Gear Disassembled View***



MyMopar.com

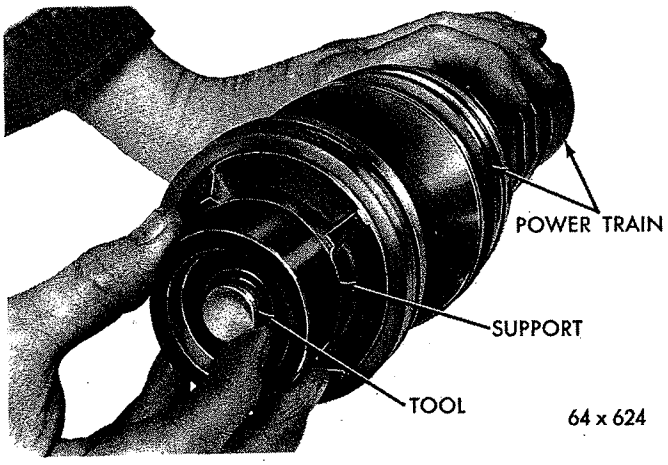


*Fig. 14—Retaining Bearing Rollers with Arbor Tool*

**in position when the housing head is removed.**

(11) Raise housing head until wormshaft oil seal just clears top of wormshaft and position arbor tool C-3929 on top of wormshaft and into oil seal. With arbor in position pull up on housing head until arbor is positioned in bearing. Remove housing head and arbor.

**To reinstall rollers, if they should become dislodged, retain rollers in the cage with wheel bearing lubricant.**

**CAUTION: If the wormshaft oil seal is to be replaced, perform the operation with the housing head assembled in the steering gear housing.**

(12) Remove large "O" ring from groove in housing head.

(13) Remove reaction seal from groove in face of housing head with air pressure directed into ferrule chamber (Fig. 15).

(14) Inspect all grooves for burrs. Make sure passage from ferrule chamber to upper reaction chamber is unobstructed.

(15) Remove reaction spring, reaction ring, worm balancing ring and spacer.

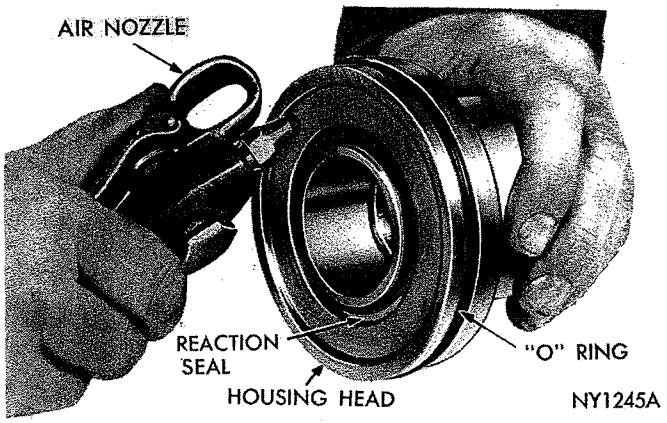


*Fig. 15—Removing Reaction Seal from Worm Shaft Support*

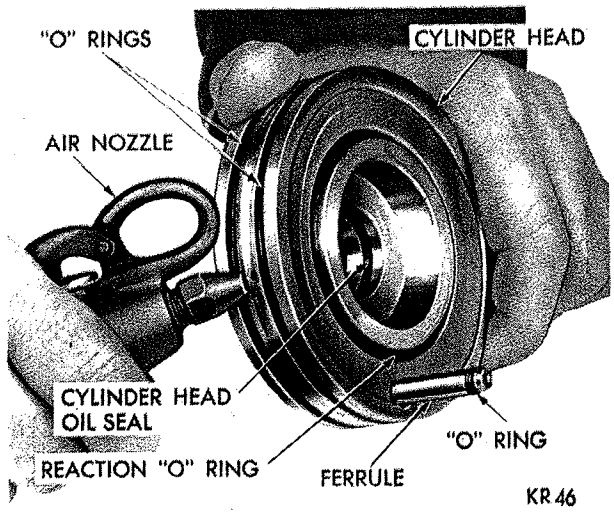


*Fig. 16—Removing Reaction Ring from Cylinder Head*

(16) Hold wormshaft from turning, then turn nut with sufficient force to release staked portions from knurled section and remove nut.

**Wire brush the knurled sections to remove the chips, then blow out the nut and wormshaft to remove any metal particles.**

(17) Remove upper thrust bearing race (thin) and uppper thrust bearing.

(18) Remove center bearing race.

(19) Remove lower thrust bearing and lower thrust bearing race (thick).

(20) Remove lower reaction ring and reaction spring.

(21) Remove cylinder head assembly.

(22) Remove two "O" rings in two outer grooves in cylinder head.

(23) Remove reaction "O" ring from groove in face of cylinder head with air pressure directed into oil hole located between two "O" ring grooves (Fig. 16).

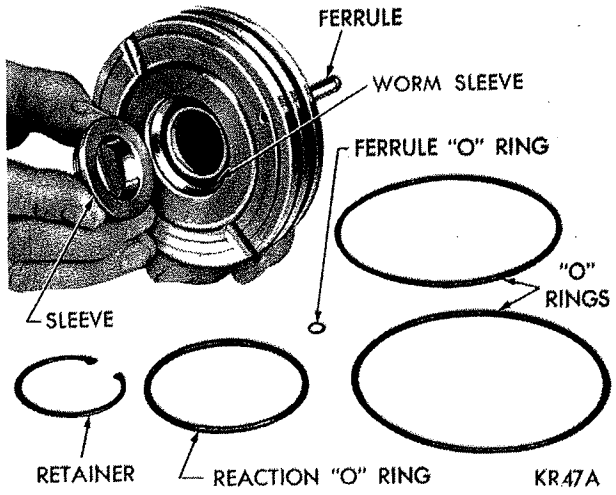


*Fig. 17—Removing Cylinder Head Oil Seal*

MyMopar.com

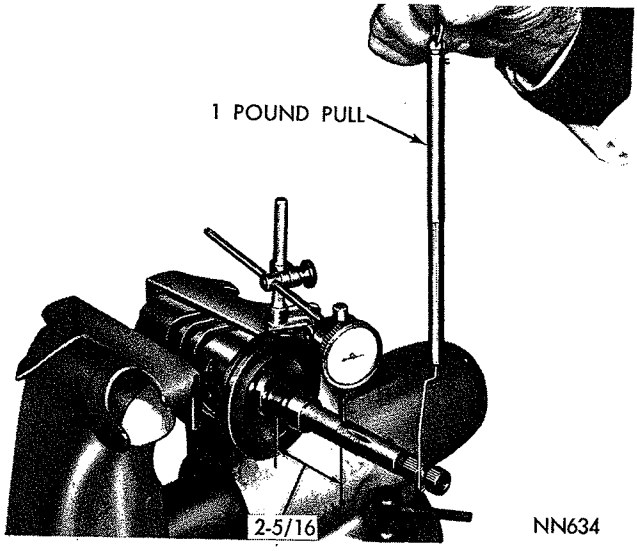


*Fig. 18—Checking Worm Shaft Side Play*

(24) Remove snap ring, sleeve and rectangular oil seal ring from cylinder head counterbore (Fig. 17).

(25) Test operation of wormshaft. The torque required to rotate wormshaft throughout its travel in or out of piston must not exceed 2 inch-pounds with a 15 pound side load. The worm should run in and out of piston under its own weight.

**The worm and piston is serviced as a complete assembly and should not be disassembled.**

(26) Test for excessive side play with the piston held firmly in a vise with the rack teeth up, and the worm in its approximate center of travel. The vertical side play measured at a point 2-5/16 from the piston flange should not exceed .008 inch when the end of the worm is lifted with a force of 1 pound (Fig. 18).

(27) Inspect condition of rubber sealing ring located under cast iron ring and replace if necessary. Install cast iron piston ring as follows:

(a) Slide a new piston ring into place in piston groove, then place piston and ring assembly in Tool C-3676 with lower part of piston and ring resting on land of tool (Fig. 19).

(b) Press down on piston to seat ring in piston groove, forcing open ends of ring out for ease of locking the ring.

(28) Place piston assembly in a vertical position (wormshaft up) in a vise equipped with soft jaws.

(29) Inspect cylinder head ferrule oil passage for obstructions and the lands for burrs, then lubricate the two large "O" rings and install them in the cylinder head grooves (Fig. 13).

(30) Install worm sleeve seal, sleeve and snap ring (if removed). Make sure snap ring is seated in groove.

(31) Install lower reaction seal (O-ring) in cylinder head groove.

(32) Slide cylinder head assembly (ferrule up) on wormshaft. Check wormshaft seal ring making sure gap is closed to avoid damaging the ring as the cylinder head moves against piston flange.

(33) Lubricate with power steering fluid, and install parts in the following order:

(a) Lower thrust bearing race (thick).

(b) Lower thrust bearing.

(c) Lower reaction spring (with the small hole over the ferrule).

(d) Lower reaction ring (flange up so ring protrudes through reaction spring and contacts the reaction "O" ring in the cylinder head).

(e) Center bearing race.

(f) Upper thrust bearing.

(g) Upper thrust bearing race (thin).

(h) Start wormshaft thrust bearing adjusting nut (do not tighten).

(34) Turn wormshaft clockwise one-half turn. Hold wormshaft in this position with splined nut, Tool C-3637 and socket wrench, and hold in this position thru items 35 and 36, then tighten nut to 50 foot-pounds to prestretch wormshaft threads.

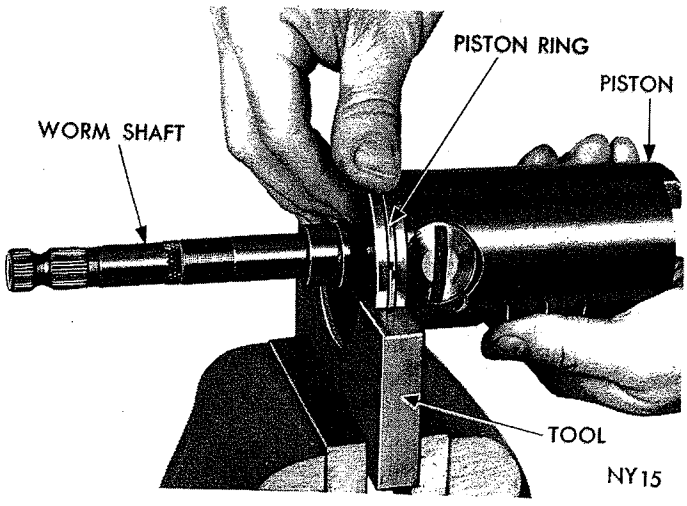


*Fig. 19—Installing Piston Ring*

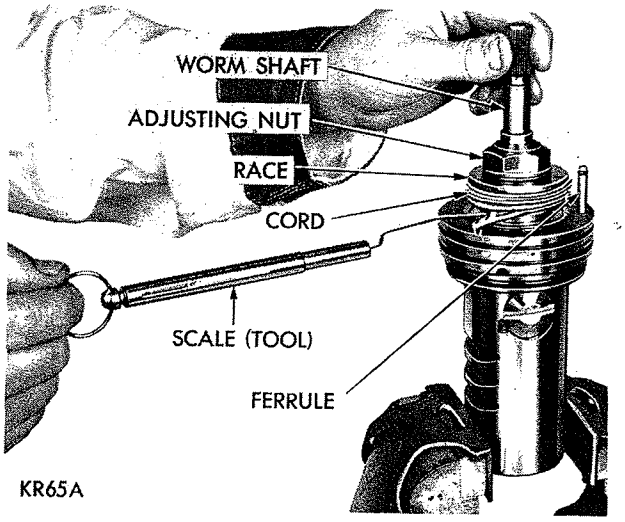


*Fig. 20—Checking Center Bearing Pre-Load*

MyMopar.com

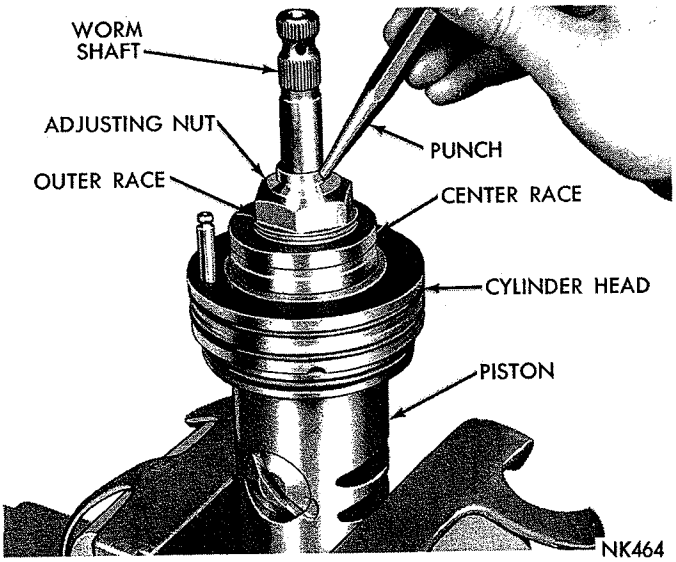


***Fig. 21—Staking Worm Shaft Bearing Adjusting Nut***

(35) Loosen adjusting nut. Place several rounds of cord around center bearing race (Fig. 20). Make a loop in one end of cord and hook loop of a distributor breaker arm spring scale Tool MUT-36 in cord loop. Pulling cord will cause bearing race to rotate. Retighten worm bearing adjusting nut while pulling on cord with scale. When adjusting nut is tightened properly, reading on the scale should be 16 to 24 ounces (20 ounces preferred while the race is turning).

(36) Stake upper part of wormshaft adjusting nut into knurled area of shaft.

(a) Hold a ¼ inch flat end punch on center line of wormshaft end at a slight angle to nut flange (Fig. 21).

(b) Strike punch a sharp blow with a hammer and test preload.

**If adjusting nut moved during staking operation, it can be corrected by striking the nut a glancing blow in the direction required to regain proper preload.**

(c) After retesting for proper preload, stake the nut at three more locations 90° apart around upper part of the nut.

(d) To test total staking, tighten nut to 20 foot-pounds in either direction. If nut does not move, staking operation is satisfactory.

**Retest preload adjustment, torque of 16 to 24 inch ounces must remain after adjusting nut is securely locked.**

(37) Position spacer assembly over center race, engaging dowel pin of spacer in slot of race, and slot of spacer entered over cylinder head ferrule.

**This will align the valve pivot lever hole in the center bearing race with the valve pivot lever hole in center bearing spacer assembly. The small "O" ring for the ferrule groove should not be installed until after upper reaction spring and spacer have been installed.**

(38) Install upper reaction ring on center race and spacer with flange down against spacer.

(39) Install upper reaction spring over reaction ring with cylinder head ferrule through hole in reaction spring.

(40) Install worm balancing ring (without flange) inside upper reaction ring.

(41) Lubricate ferrule "O" ring with Petrolatum and install in groove on cylinder head ferrule.

(42) If oil seal was removed from housing head, install a new seal with Tool C-3650 (Fig. 7). See "Wormshaft Oil Seal Replacement." With lip of seal toward bearing, drive seal until tool bottoms on the support.

(43) Lubricate and install reaction seal in groove in face of housing head with flat side of seal out (Fig. 22). Install "O" ring in groove on housing head.

(44) Slide housing head and arbor, Tool C-3929 over the wormshaft carefully engaging cylinder head ferrule and "O" ring and making sure reaction rings enter circular groove in housing head. The power train is now ready for installation in housing.

(45) It is generally not necessary to remove sector shaft cover. However, this may be easily accomplished by removing the adjusting screw. While holding the cover, turn adjusting screw clockwise until the shaft becomes disengaged from cover. The adjusting screw and thrust washer will now slide out of the "T" slot in end of shaft.

### *Gear Shaft Assembly*

(46) To remove gear shaft needle bearings from housing, remove grease retainer, oil seal snap ring with pliers Tool C-3875 and remove seal back-up washer.

(47) Insert Tool C-3875 in steering housing; place housing in a press and press out bearings and oil seal.

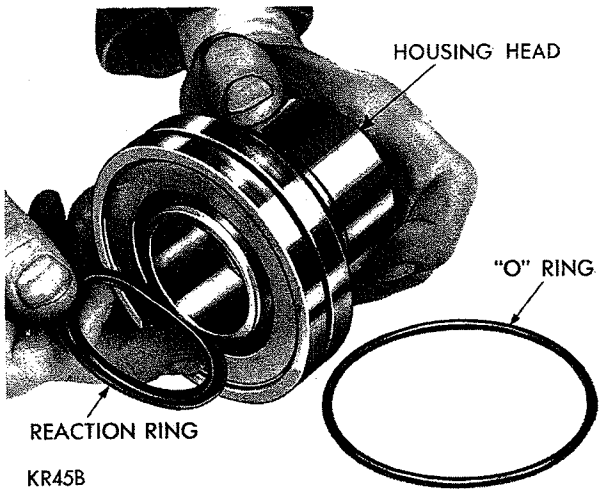


***Fig. 22—Installing Reaction Seal Ring in Worm Shaft Support***

MyMopar.com

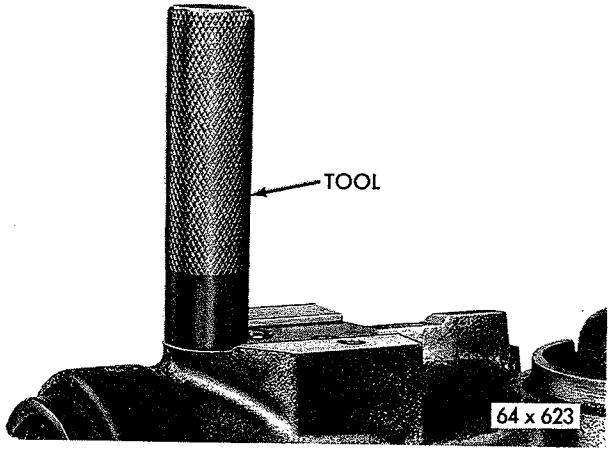


*Fig. 23—Aligning Center Bearing Spacer with Steering Valve*

(48) To install gear shaft lower needle bearing, place bearing on end of Tool C-3875. Press bearing into steering gear housing 1/32 inch below end of bearing bore to provide space for oil seal, back-up washer and snap ring and cross shaft grease retainer. See "Cross Shaft Oil Seal Replacement."

**CAUTION: The arbor adapter ring must be used with C-3875 Remover and Installer Arbor, otherwise the bearings may be crushed.**

(49) To install upper needle bearing, place bearing on end of Tool C-3875. Press bearing into housing flush with end surface of bore.

(50) Insert gear shaft and adjusting screw into cover and using a screwdriver through the threaded hole in cover, turn screw counterclockwise to pull shaft completely into the cover. Lubricate a new square section seal ring and slide it over adjusting screw into position on top of cover. Install adjusting screw lock nut, but do not tighten at this time.

(51) Lubricate cover "O" ring and gear shaft cover groove with wheel bearing grease and place "O" ring in cover groove. The shaft assembly is now ready for installation.

### Gear Shaft Installation

(52) Lubricate power train bore of the housing with power steering fluid, and carefully install power train assembly. To keep reaction rings from coming out of their grooves keep worm turned fully counterclockwise. The piston teeth must be facing to the right and the valve lever hole in center race and spacer must be in the "up" position.

**CAUTION: Make sure the cylinder head is bottomed on the housing shoulder (Figs. 1 and 2).**

(53) Align valve lever hole in center bearing race and spacer exactly with the valve lever hole in the gear housing. Turn the housing head by tapping on a reinforcing rib with hammer and drift. Use Tool C-3649 to maintain alignment (Fig. 23).

**The aligning tool should not be removed until the spanner nut is securely tightened.**

(54) Install housing head tang washer to index with groove in housing. Install spanner nut and tighten to 110 to 200 foot-pounds with Tool C-3634.

(55) Set the power piston at the center of travel and install gear shaft and cover assembly so that sector teeth index with piston rack teeth. Make sure "O" ring is positioned in face of cover.

(56) Install cover spanner nut and tighten 110 to 200 foot-pounds with Tool C-3633.

(57) Install valve pivot lever (double bearing end first) (Fig. 24) into center race and spacer through hole in steering housing so that slots in valve lever are parallel to wormshaft in order to engage the anti-rotation pin in center race. Install valve pivot lever spring small end first.

**Turn worm until the piston bottoms in both directions and observe the action of the lever. It must be in the center of the hole and snap back to its center position when the worm torque is relieved.**

(58) Install valve body on housing making sure valve pivot lever enters hole in valve spool (Fig. 1). Be sure "O" ring seals are in place. Tighten valve mounting screws to 7 foot-pounds.

(59) Install new gear shaft seal followed by seal back-up washer and snap ring and a new grease retainer as outlined under "Gear Shaft Oil Seal Replacement."

### Final Tests and Adjustments

(1) Remove oil reservoir cover and fill reservoir with Power Steering Fluid, Part No. 2084329 or equivalent, to the level mark.

(2) Connect test hoses C-3211 and C-3318 with proper adapters to hydraulic pump on the vehicle with pressure gauge C-3309B installed between the pump and steering gear.

(3) Start the engine.

(4) Roughly center valve until the unit is not self-steering. Expel all air from the unit by turning wormshaft back and forth through the travel several times. Tap on the head of valve body attaching screws to

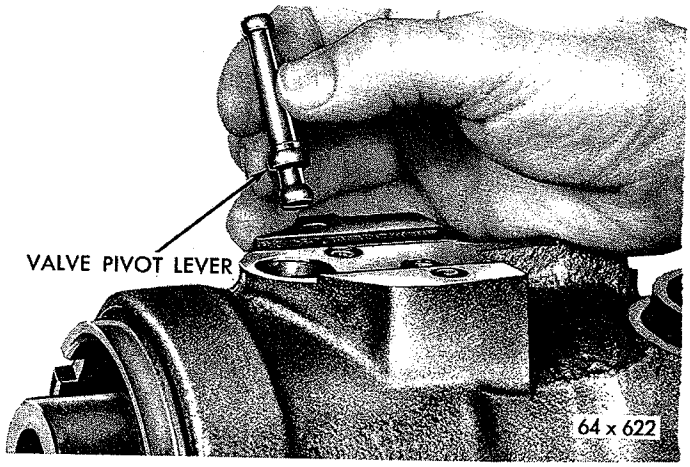


*Fig. 24—Installing Valve Pivot Lever*

MyMopar.com

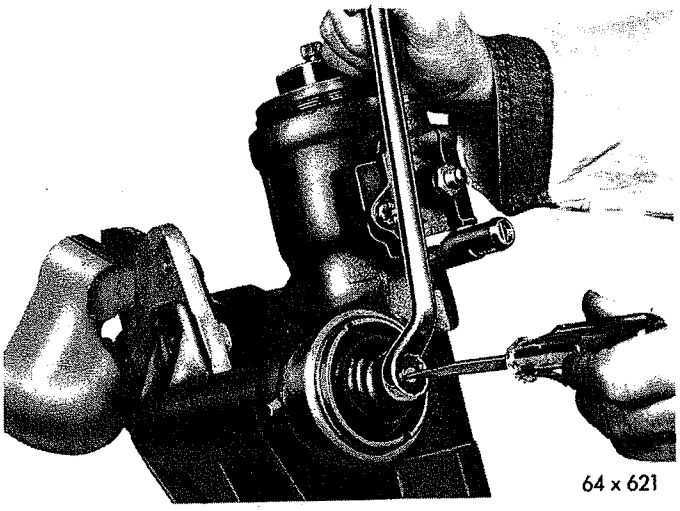


*Fig. 25—Adjusting Steering Gear Mesh*

move valve body up on steering housing, and tap on end plug to move valve body down on housing.

(5) Refill reservoir before proceeding with following tests and adjustments on the bench.

(a) With steering gear on center, tighten gear shaft adjusting screw until backlash in steering gear arm just disappears. See "Gear Shaft Adjustment."

If the power train has been removed, tighten 1-1/4 turns from this position and while holding the adjusting screw in this position, tighten lock nut (Fig. 25).

**This is a temporary adjustment to bring the piston rack and sector teeth in full alignment.**

(b) Operate the unit through its full travel several times to align piston rack and sector teeth.

(c) With the gear on center, readjust the sector shaft backlash. This will require loosening the adjusting screw until backlash is evident. Then retighten the adjusting screw until the backlash just disappears. Continue to tighten for 3/8 to 1/2 turn from this position and tighten the lock nut to 50 foot-pounds to maintain this setting.

(d) Starting from a point at least one full turn of the wormshaft either side of center, torque at the sector shaft required to turn the unit through center at 2 rpm in each direction shall not exceed 20 foot-pounds or vary more than 5 foot-pounds from left to right.

(e) Adjust the torque to be equal in both directions by readjusting the valve.

Tighten valve body adjusting screw to 200 inch-pounds.

(f) With gear at or near the full turn in either direction, attempt to return the unit to center by applying a torque wrench at steering gear shaft. Hold wormshaft until cross shaft torque builds up to 50 foot-pounds. Release wormshaft and maintain a constant steady pull at 2 rpm on the gear shaft. If cross shaft torque does not drop to 20 foot-pounds maximum as the unit passes through center, check for too much interior drag; binding valve lever, binding spool valve, or tight cross shaft adjustment.

(6) With unit under power, but with no load, the torque required to rotate wormshaft through an included angle of 180° (90° either side of center) at 6 rpm (or one revolution every ten seconds) shall be 6-10 inch-pounds. Disconnect test equipment and mounting fixture and install unit in vehicle.

### Gear Installation

### Six Cylinder - All Except Fury Models

(1) Install steering gear from top of engine compartment.

**DO NOT damage the automatic transmission oil cooler lines on vehicles so equipped.**

(2) Install the steering gear housing retaining bolts and tighten to 55 foot-pounds, on Valiant, Barracuda, Belvedere and Satellite models, and 80 foot-pounds on Fury models.

(3) Install the starting motor.

(4) Position steering gear in center of high spot, the worm master serration should be at 12 o'clock, and install the steering gear arm, washer and nut. Tighten nut to 120 foot-pounds.

(5) Connect the hydraulic hoses to the steering valve.

(6) Position clamp on steering shaft coupling and with master serration on wormshaft and notch on body of coupling aligned, engage column coupling with steering gear wormshaft.

(7) Install coupling roll pin.

(8) Position steering jacket assembly so steering shaft coupling is centered at midpoint of up and down travel.

A 3/16 inch gauge hole is provided in the steering shaft as a reference point for centering the shaft in the coupling. Move the steering column up or down (before tightening the column clamp) until the centerline of gauge hole is 13/16 inch from top face of coupling.

(9) With coupling centered, tighten column jacket to instrument panel clamp bolts to 95 inch-pounds.

(10) Connect battery ground cable.

(11) Start engine and turn steering wheel to right and left several times to expel the air from system.

(12) Inspect power steering pump reservoir fluid level, replenish as necessary.

### Eight Cylinder - All Except Fury Models

(1) From under vehicle position the gear on the crossmember and install the three gear housing mounting bolts. Tighten bolts to 55 foot-pounds, on Valiant, Barracuda, Belvedere and Satellite models, and 80 foot-pounds on Fury models.

(2) On Valiant and Barracuda models lower engine on front engine mount pads and install front engine mount stud nuts and washers. Tighten nuts to 75 foot-pounds.

MyMopar.com

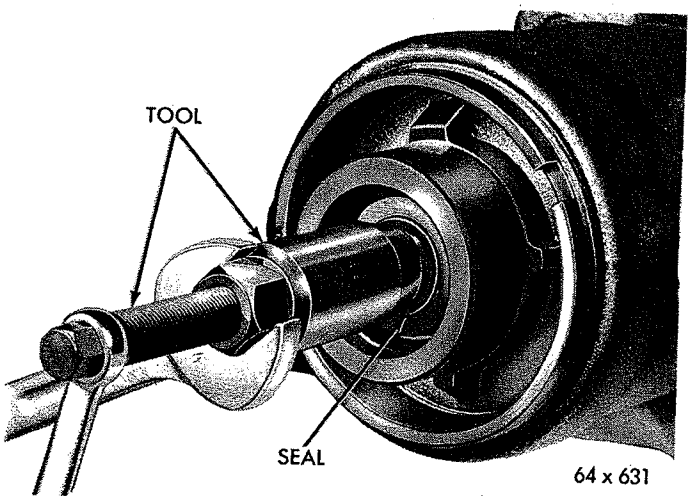


*Fig. 26—Removing Worm Shaft Oil Seal*

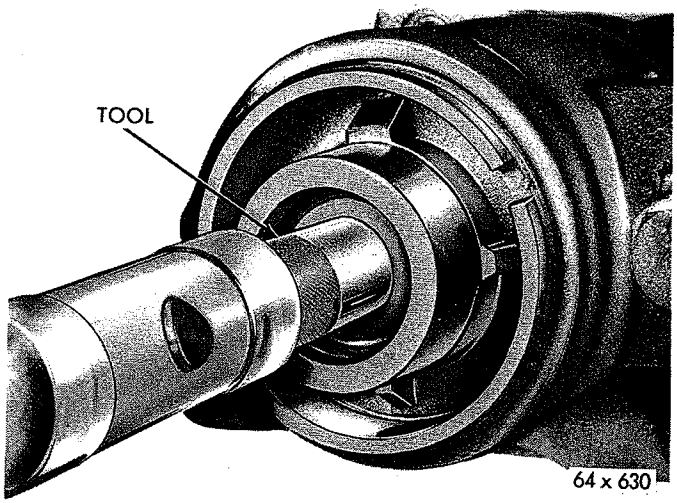


*Fig. 27—Installing Worm Shaft Oil Seal*

(3) Install starting motor.

(4) Position steering gear in center of high spot (worm master serration should be at 12 o'clock) and install steering gear arm, washer and nut. Tighten nut to 120 foot-pounds.

(5) Connect hydraulic hoses to steering valve.

(6) Position clamp on steering shaft coupling and with master serration on wormshaft and notch on body of coupling aligned, engage column coupling with steering gear wormshaft.

(7) Install the coupling roll pin.

(8) Position steering jacket assembly so steering shaft coupling is centered at midpoint of up and down travel.

A 3/16 inch gauge hole is provided in the steering shaft as a reference point for centering the shaft in the coupling. Move the steering column up or down (before tightening the column clamp) until the centerline of gauge hole is 3/16 inch from top face of coupling.

(9) With coupling centered, tighten column jacket to instrument panel clamp bolts to 95 inch-pounds.

(10) Connect battery ground cable.

(11) Start engine and turn steering wheel to right and left several times to expel the air from the system.

(12) Inspect power steering pump reservoir fluid level and replenish as necessary.

### Installation - Fury Models

(1) From under vehicle, position steering gear on crossmember, install the three bolts and tighten to 80 foot-pounds.

(2) Position steering gear in center of high spot (worm shaft master serration should be at 12 o'clock). With the front wheels in straight ahead position, install steering arm, washer and nut and tighten to 120 foot-pounds.

(3) Center steering wheel and install intermediate shaft pot coupling on worm shaft indexing master serration.

(4) Install roll pin in pot coupling.

(5) Tap rubber coupling down, install roll pin in flange hub, install the two flange bolts and nuts and tighten to 200 inch pounds.

(6) Install rubber coupling heat shield making sure it does not interfere with rubber coupling.

(7) Connect pressure and return hoses to steering gear.

(8) Connect battery ground cable.

(9) Fill pump reservoir, start engine and expel all air from system by turning steering wheel several times from right to left.

(10) Inspect pump reservoir fluid level and replenish as necessary.

### Worm Shaft Oil Seal Replacement

The worm shaft oil seal replacement requires removal of the steering gear assembly from the vehicle. See "Gear Removal."

(1) Remove oil seal with Tool C-3638 (Fig. 26).

(2) Drive new oil seal in place (lip of seal toward housing head) with Tool C-3650 (Fig. 27).

## SPECIFICATIONS

| | |
|---|---|
| Type | Constant Control Full Time Power |
| Ratio | 15.7 to 1 |
| Wheel Turns—Stop to Stop | 3 ½ |
| Cross Shaft Bearings | 2 Needle Bearings and 1 Direct Bearing on Gray Iron Cover |
| Worm Shaft Thrust Bearing Pre-Load | 16-24 Ozs. |

MyMopar.com

| | |
|---|---|
| Cross Shaft Adjustment | Tighten Adjusting Screw 3/8 to 1/2 turn past Zero Back Lash (Center of High Spot) |
| Fluid Capacity of Hydraulic System | 4 Pts. |
| Type of Fluid | Power Steering Fluid Part No. 2084329 or equivalent |

## TIGHTENING REFERENCE

| | FOOT POUNDS | INCH POUNDS |
|---|---|---|
| Gear Housing to Frame Bolt | | |
| Valiant, Barracuda, Belvedere and Satellite | 55 | |
| Fury Models | 80 | |
| Gear Shaft Adjusting Screw Lock Nut | 50 | |
| Gear Shaft Cover Nut | 20 | |
| Pump Inlet Fitting | 30 | |
| Steering Arm Nut | 120 | |
| Steering Column Support Nut | 12 | |
| Steering Shaft Coupling Bolts | | 200 |
| Valve Body Attaching Bolts | | 200 |
| Valve Body End Plug | 25 | |
| Steering Wheel Nut | 24 | |

## POWER STEERING PUMP

### INDEX


| | Page | | Page |
|---|---|---|---|
| Discharge Fitting Ferrule | 28 | Pump Installation | 31 |
| Flow Control Valve | 28 | Pump Removal | 27 |
| General Information | 24 | Slipper Ring Replacement | 24 |
| Oil Filter Screen | 29 | Service Diagnosis | 25 |
| Oil Seal Replacement | 27 | Specifications | 31 |
| Pressure Relief Valve | 29 | Tests and Adjustments | 26 |


### GENERAL INFORMATION

Two models of power steering pumps are used on Plymouth models. The pump identified as the .96 can be recognized by the plain end of the shaft, visible from the pulley end. This pump is used exclusively on Valiant, Barracuda, Belvedere and Satellite models.

The second pump is the 1.2 pump and can be identified by a hexagon shaped hole in the pulley end of the shaft. On the Fury models, either pump may be used. Before servicing a power steering pump, it is necessary to make the proper identification because

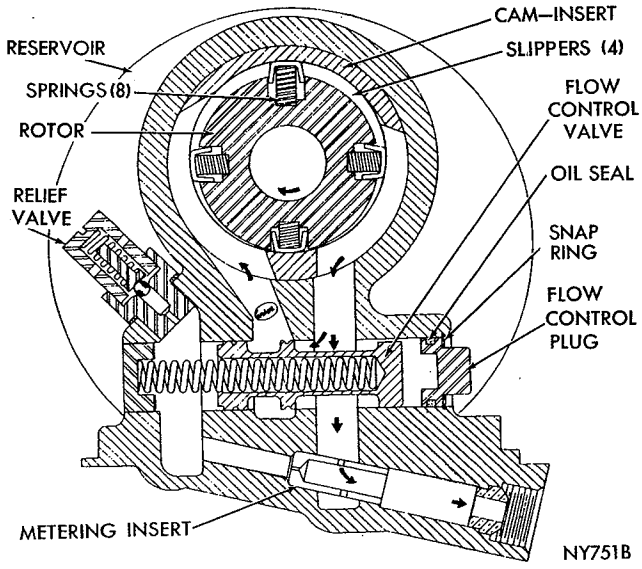


*Fig. 1—Power Steering Pump (1.2 Pump)*

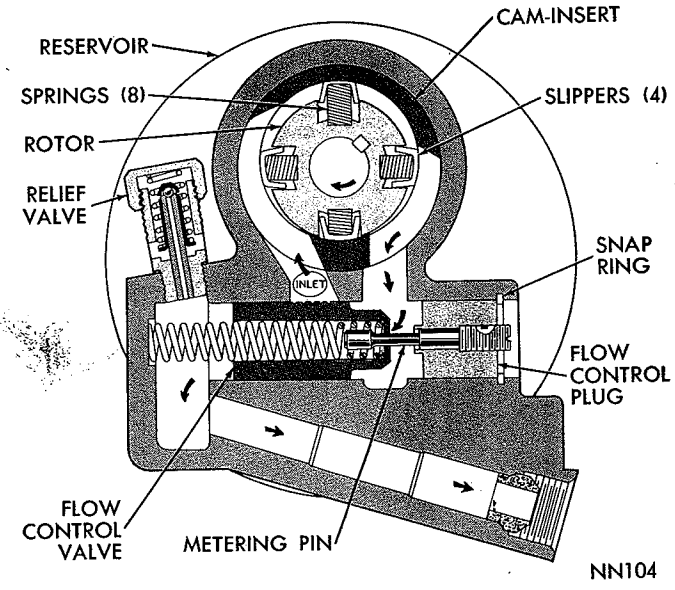


*Fig. 2—Power Steering Pump (.96 Pump)*

MyMopar.com

some of the special tools and specifications are different.

Both pumps are belt driven constant displacement type pumps. In operation the spring loaded slippers in the pump rotor are in contact with the eccentric inside diameter of the cam-insert. As the rotor turns, the slippers force the oil from the inlet side of the pump to the flow control valve. In the 1.2 pump, orifices in the metering insert permit a flow of approximately two gallons per minute to the steering gear before the valve moves to the left to allow the excess to flow back to the inlet side of the pump. Maximum pressure in the system is limited by the pressure relief valve. The valve opens into the reservoir when the pressure exceeds the maximum pressure specified (Fig. 1).

In the .96 pump, the slippers in the rotor force the oil from the inlet side of the pump to the flow control valve and through a variable orifice formed in the head of the valve by the metering rod. Higher pump output caused by higher engine speed is sensed as a pressure drop through the orifice which moves the flow valve to the left (Fig. 2). This movement causes a change in orifice size as the valve moves to the larger part of the metering-rod at engine speeds above approximately 3000 rpm. This metering-rod principle allows high flow for improved steering at low speeds and low flow for lower fluid temperatures at high speeds.

Maximum pressure in the system is limited by the pressure relief valve which opens into the reservoir when the pressure exceeds the maximum specified.

## SERVICE DIAGNOSIS

| Condition | Possible Cause | Correction |
|---|---|---|
| **INTERMITTANT ASSIST** | (a) Flow control valve sticking. | (a) See "Pump Flow Test." Service flow control valve as necessary. |
| | (b) Low fluid level. | (b) Inspect and correct fluid level. |
| | (c) Low pump efficiency. | (c) Perform "Pump Flow Test" and service as necessary. |
| **NO ASSIST** | (a) Pump seizure. | (a) Replace pump. |
| | (b) Broken slipper spring(s). | (b) Recondition pump or replace as necessary. |
| | (c) Flow control bore plug ring not in place. | (c) Replace snap ring. Inspect groove for depth. |
| | (d) Flow control valve sticking. | (d) See "Pump Flow Test." Service flow control valve as necessary. |
| **NO ASSIST WHEN PARKING ONLY** | (a) Wrong pressure—relief valve. | (a) Install proper relief valve. |
| | (b) Broken "O" ring on flow control bore plug. | (b) Replace "O" ring. |
| | (c) Loose pressure—relief valve. | (c) Tighten valve. DO NOT ADJUST. |
| | (d) Low pump efficiency. | (d) Perform "Pump Flow Test." |
| **NOISY PUMP** | (a) Low fluid level. | (a) Inspect and correct fluid level. |
| | (b) Belt noise. | (b) Inspect for pulley alignment, paint or grease on pulley and correct. |
| | (c) Foreign material blocking pump housing oil inlet hole. | (c) Remove reservoir, visually check inlet oil hole and service as necessary. |
| **PUMP VIBRATION** | (a) Pump hose interference with sheet metal or brakes lines. | (a) Reroute hoses. |
| | (b) Belt loose. | (b) Adjust belt. See "Cooling System," Group 7. |
| | (c) Pulley loose or out of round. | (c) Replace pulley. |
| | (d) Crankshaft pulley loose or damaged. | (d) Replace crankshaft pulley. |
| **PUMP LEAKS** | (a) Cap or filler neck leaks. | (a) Correct fluid level. |
| | (b) Reservoir solder joints leak. | (b) Resolder or replace reservoir as necessary. |
| | (c) Reservoir "O" ring leaking. | (c) Inspect sealing area of reservoir. Replace "O" ring or reservoir as necessary. |
| | (d) Shaft seal leaking. | (d) Replace seal. |
| | (e) Loose rear bracket bolts. | (e) Torque bolts. See "Tightening Reference." |
| | (f) Loose or faulty high pressure ferrule. | (f) Torque fitting to 24 foot-pounds or replace as necessary. |
| | (g) Rear bolt holes stripped or casting cracked. | (g) Repair, if possible, or replace pump. |

MyMopar.com

## TESTS AND ADJUSTMENTS

### CHECKING FLUID LEVEL

(1) Start engine, turn steering wheel back and forth several times to expel air from system, then shut off engine.

(2) Wipe reservoir filler cap free of dirt, remove cap and visually inspect oil level in reservoir.

**Engine Cold**—Oil level should be at bottom of filler neck.

**Engine Hot**—Oil level should be one-half way up in filler neck.

If necessary, add only Power Steering Fluid Part No. 2084329 or equivalent.

### PRESSURE TEST

(1) Measure pump belt tension. See "Cooling System," Group 7.

(2) Disconnect pressure hose at pump and in its place install the adapter fitting and test hose C-3388. Connect pressure hose, from steering gear, to shut off valve of test hose (Fig. 3).

**Before disconnecting power steering hoses, carefully observe routing so they are in same position when reinstalled.**

(3) Remove oil reservoir cap and place a thermometer, with a range of 200°F. in oil.

(4) Install a tachometer and operate engine 500 RPM. Inspect and correct pump fluid level if necessary.

(5) Expel all air from unit by turning steering wheel to full right turn and back to full left turn several times and recheck oil level.

**To assist in heating the pump oil; slowly close the pressure gauge valve until gauge reads 400 psi and open valve fully when oil temperature reaches 150 degrees F.**

(6) With engine running at 500 rpm and no steering effort applied, oil temperature at 150-170 degrees, pressure gauge should read less than 100 psi. If pressure is higher inspect hoses for kinking or obstructions and steering gear for restrictions.

(7) Increase engine speed to 1000 rpm and slowly close valve. With valve fully closed, pump pressure should be as listed under "Specifications."

**CAUTION: Closing valve for more than a few seconds will cause abnormal pump wear.**

(8) If pressure is higher or lower than shown in "Specifications" relief valve could be faulty. Replace valve with a valve known to be good and repeat test. If pressures are still below the minimum, disassemble pump and inspect flow control valve for fouling and rotating parts for unusual wear.

(9) If pressure is correct, open valve fully and operate steering unit through another cycle, holding steering wheel at extreme travel in each direction while watching pressure gauge. Unequal gauge readings indicate internal leakage in steering gear unit. Do not hold gear in either extreme position for more than a few seconds.

(10) If pressures are within specifications, perform pump flow test.

### PUMP FLOW TEST

(1) Inspect pump belt tension and correct if necessary. See "Belt Adjustment" Group 7.

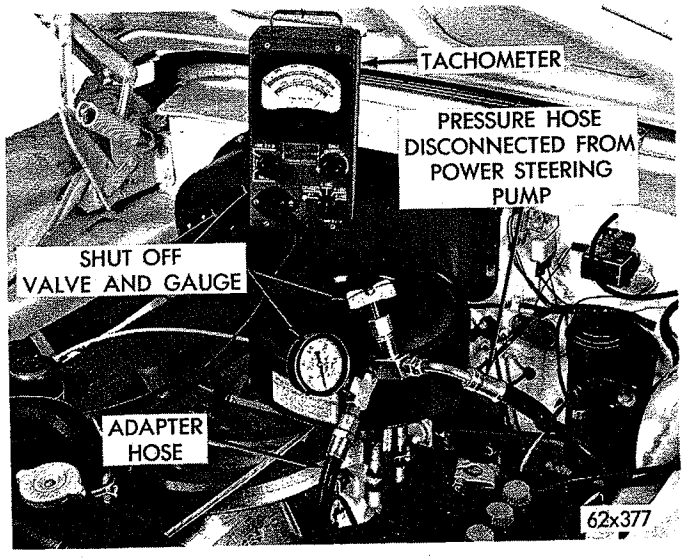


*Fig. 3—Pressure Test*

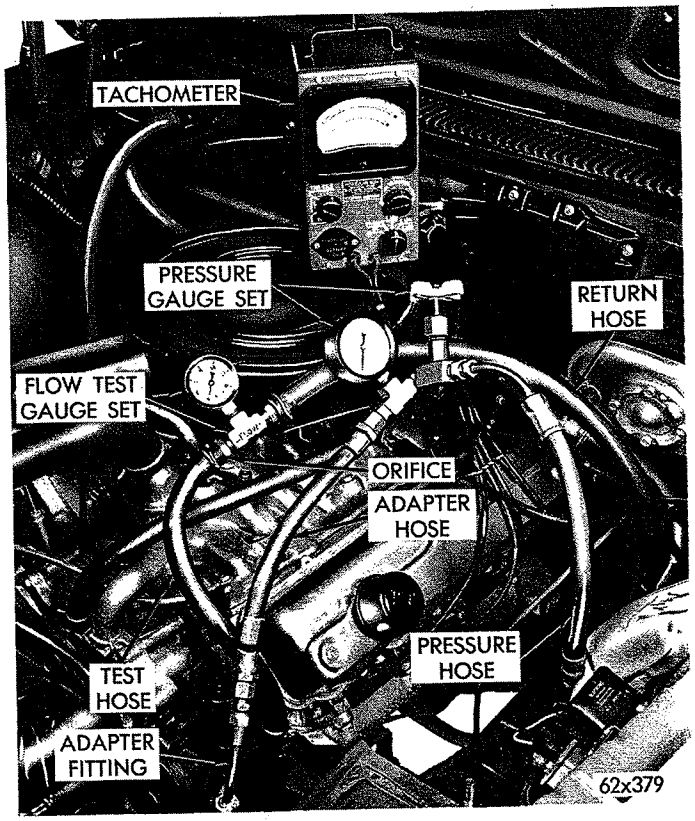


*Fig. 4—Flow Test*

MyMopar.com

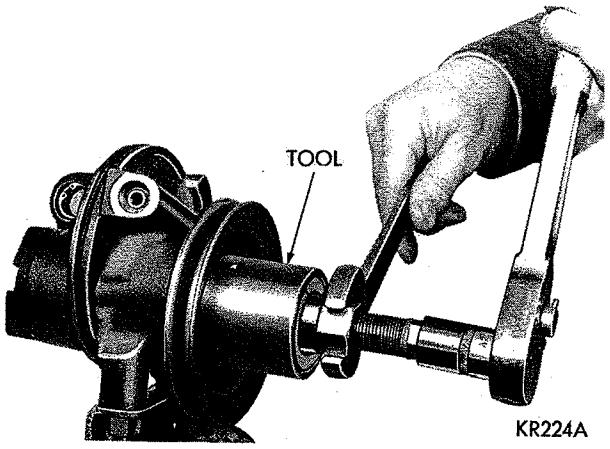


*Fig. 5—Removing Pump Pulley*

(2) With test hose and pressure gauge connected as in preceeding pressure test (Fig. 3) open valve fully.

(3) Disconnect return hose from pump and install flow gauge set C-3885 between pump and return hose. The arrow on "tee" connector must be pointed towards pump (Fig. 4). Use orifice SP-5074 for .96 pump and orifice SP-3825 for 1.2 pump.

(4) Inspect and correct pump fluid level if necessary.

(5) Start engine and operate at 500 rpm.

(6) Expel all air from system by turning steering wheel from full right to full left turn several times.

(7) Increase engine speed to 1000-1200 rpm. Heat oil to 150-170 degrees F. by steering car from side to side. With no steering effort applied, gauge in return line should read 16-28 psi. A reading of less than 16 psi. or greater than 28 psi., indicates flow valve may be sticking or pump may be badly worn. Remove, clean and reinstall flow valve.

(8) Decrease engine speed to 500 rpm and slowly close valve till gauge in pressure line reads 850 psi without fully closing valve. The flow gauge in return line should read a minimum of 10 psi. A valve of less than 10 psi indicates a sticking flow control valve, a leaking pressure-relief valve or a badly worn pump.

When removing test equipment, reinstall pressure and return hoses in same position they were in before removal.

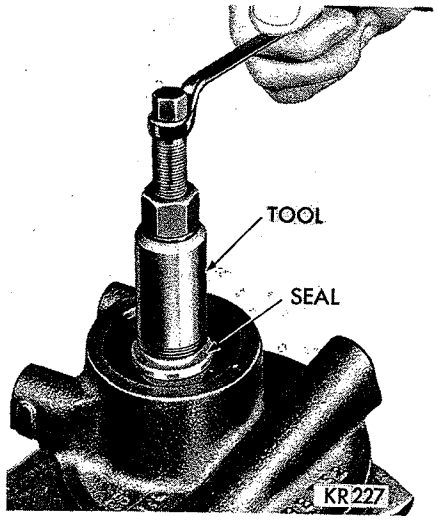


*Fig. 6—Removing Pump Shaft Oil Seal*

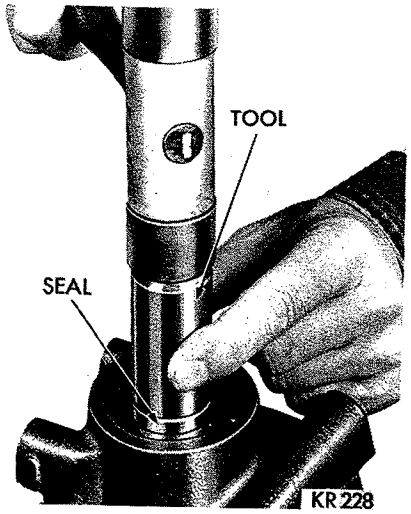


*Fig. 7—Installing Pump Oil Seal*

## PUMP REMOVAL

(1) Loosen pump lower mounting and locking bolts and remove belt.

(2) Disconnect both hoses at pump.

(3) Remove mounting and locking bolts and remove pump and bracket.

## OIL SEAL REPLACEMENT

(1) Remove pump from engine. Drain reservoir and clean exterior before servicing.

(2) Remove brackets, reservoir screws, reservoir, gasket and "O" ring.

(3) Using spacer washers between front bracket and pump, reinstall front bracket for use as holding fixture. Clamp bracket in a vise (Fig. 5).

(4) Remove pulley with Tool C-3615 as follows:

(a) Engage one half-collar under flange of pulley hub. Position screw shaft and nut with flange section inside collar.

(b) Engage other half-collar under pulley hub and over flange of screw shaft. Install retainer sleeve over both half-collars.

(c) Hold nut from turning and turn screw till pulley is removed.

(5) Thread Tool C-3683 (1.2 pump) or C-3642 (.96 pump into metal portion of seal and turn puller center screw while holding tool body. Be careful not to damage pump shaft (Fig. 6).

(6) After inspecting for and removing all burrs and scratches from end of shaft, install a new seal with lip toward pump. Use Tool C-3782 (1.2 pump) or Tool C-3640 (.96 pump) to drive seal flush with insert (Fig. 7).

MyMopar.com

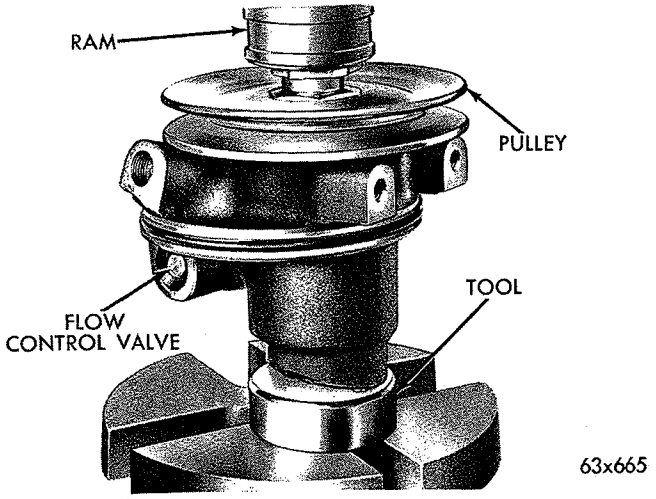


*Fig. 8—Installing Pump Pulley*

(7) Support pump body on holding fixture Tool C-3643, with locating pins in reservoir bolt holes so all pressure will be applied to lower end of pump shaft.

The pump **MUST** be supported in a manner in which all pressing force will be applied to shaft only; otherwise pump body and rotor will be damaged.

(8) Press pulley hub on shaft with a heavy duty arbor press until hub of pulley is flush with end of shaft (Fig. 8).

(9) Install new pump "O" ring and reservoir, gasket. Lubricate "O" ring before installation.

(10) Install reservoir and pump brackets. Tighten screws to 16 foot-pounds.

(11) Install pump and adjust belt as outlined under "Cooling," Group 7.

## DISCHARGE FITTING FERRULE REPLACEMENT

(1) Remove pump from engine.

(2) Clamp pump in vise upside down to prevent chips from falling into pump.

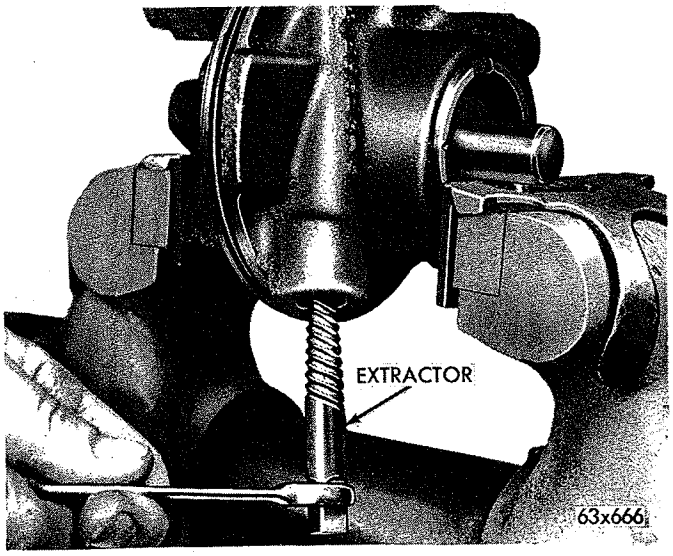


*Fig. 9—Removing Brass Ferrule (.96 Pump Shown)*

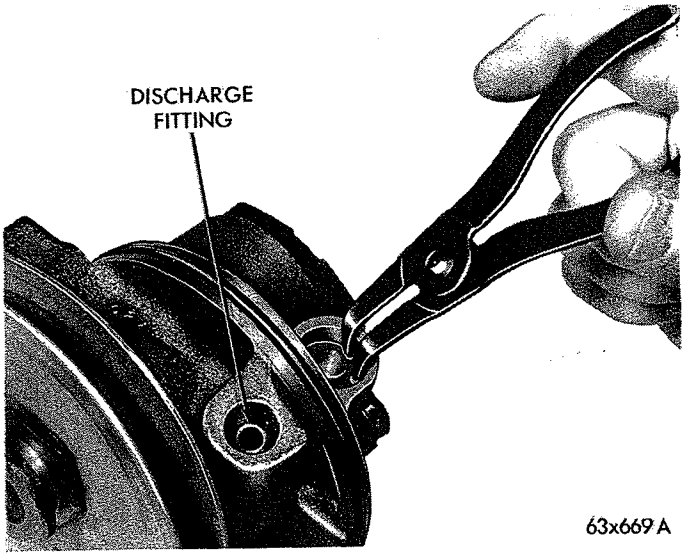


*Fig. 10—Removing Flow Control Valve Retaining Ring*

(3) Use a No. 4 screw-extractor (E-Z out) and turn into ferrule. Carefully rock extractor back and forth so as not to damage threads of housing (Fig. 9).

(4) Clean bore and center new ferrule with tapered end up in bore. Installing pressure hose and tightening to 24 foot pounds will seat ferrule.

## FLOW CONTROL VALVE SERVICING

(1) Remove pump from engine and reservoir from the pump.

(2) Remove snap ring and plug from opening located next to discharge fitting in 1.2 pump (Fig. 10). In .96 pump remove the snap ring plug and pin assembly.

**DO NOT adjust metering rod pin in plug in .96 pump. The assembly has been preset and performance cannot be improved by adjusting.**

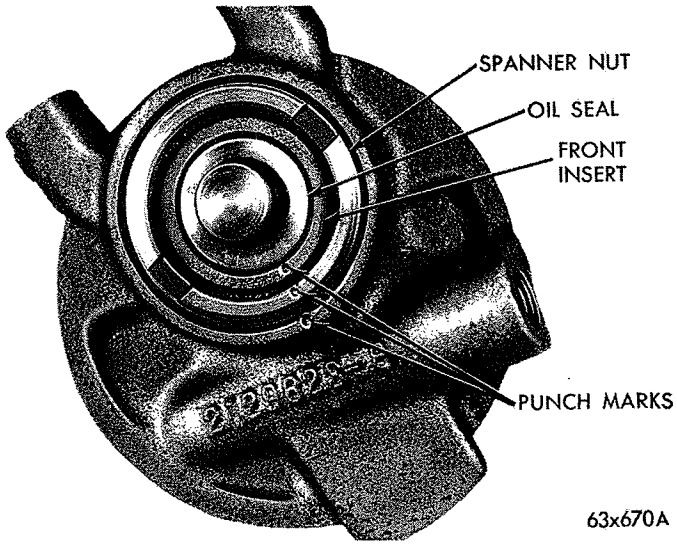


*Fig. 11—Center Punch Marks on Pump Body, Spanner Nut and Front Insert (1.2 Pump Shown)*

MyMopar.com

(3) Depress control valve against spring pressure and allow it to spring back. The valve should pop out of bore. It may be necessary to lightly rap valve and repeat above operation if it is stuck in position. Bottom plug may be removed in .96 pump to aid in removing valve. If dirt chips, etc. are found on valve or within valve bore, entire pump should be disassembled, washed out and rebuilt. If valve bore is badly scored, replace pump body.

(4) Seat control valve spring in spring pocket.

(5) Remove any burrs on valve with crocus cloth, but **DO NOT** round off edges of valve lands.

(6) Lubricate valve with Power Steering Fluid and install over spring making sure it moves freely in bore.

(7) Replace plug and pin assembly in .96 pump. On 1.2 pump, replace and lubricate "O" ring on plug and install with projection out.

(8) Install snap ring with sharp edge **UP.**

(9) Install pulley (Fig. 8), new "O" ring on pump body, new reservoir gasket, reservoir and brackets.

(10) Install pump on engine.

## PRESSURE RELIEF VALVE

The pressure relief valve should be replaced as an assembly if pressure test indicates it is incorrectly set or leaking. The valve screws out of pump body after brackets and reservoir are removed. Do not attempt to readjust this valve.

## OIL FILTER SCREEN

The oil filter screen is located in reservoir return tube. Remove and replace screen only when torn or completely clogged. Wash screen off whenever pump is disassembled.

## SLIPPER SPRING REPLACEMENT

(1) Remove pump from vehicle and bracket, pulley and reservoir from the pump.

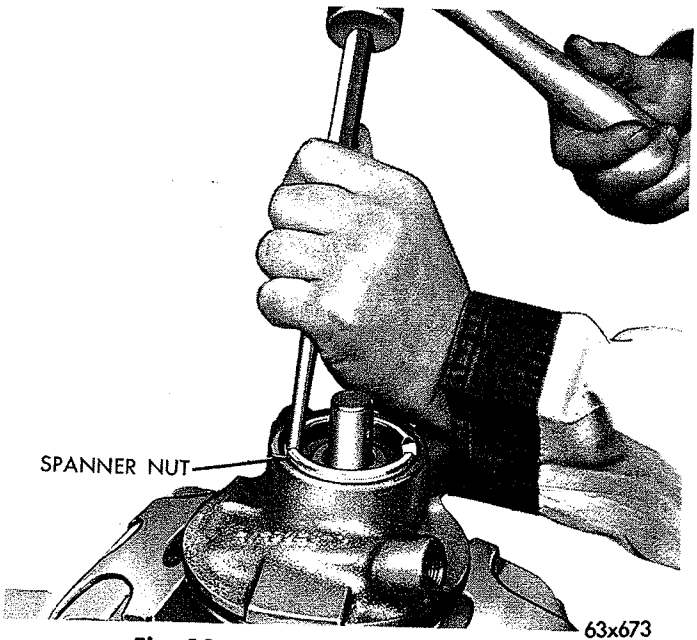


***Fig. 12—Removing Spanner Nut***

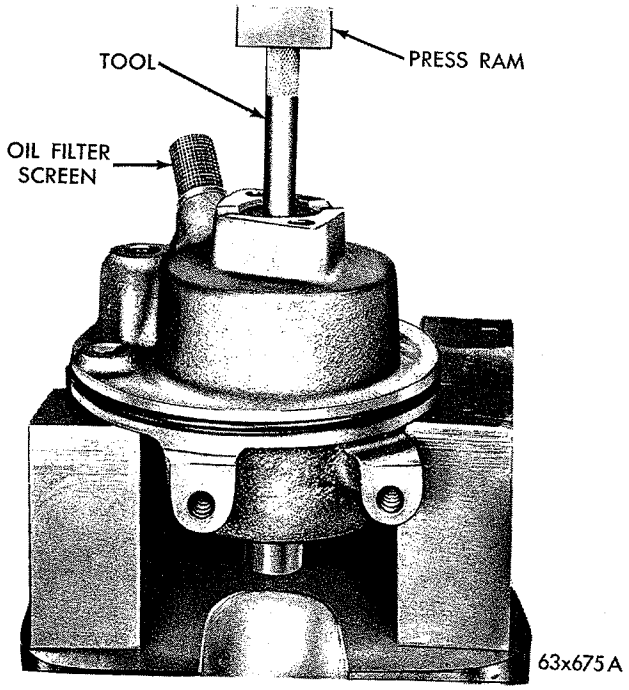


***Fig. 13—Removing Shaft, Rotor and Front Insert***

(2) Center punch spanner nut, front insert and housing to aid in proper indexing when reassembling (Fig. 11).

(3) Use a drift to remove the spanner nut (Fig. 12).

(4) Support pump housing with insert clear of arbor press table and press shaft, rotor and insert out of housing (Fig. 13).

(5) Broken edges or deep scoring of rotor and slippers will require pump body replacement.

**Do not mistake the machined notches on inside surface of cam insert, for scoring.**

(6) Smooth off burrs on pulley end (only) of pump shaft to prevent seal damage on installation. Clean all parts thoroughly with solvent. Cleanliness is essential throughout pump assembly. Reassemble with new slipper springs if possible.

(7) Using a piece of wire 25 inches long, make three turns around center of rotor, fastening ends

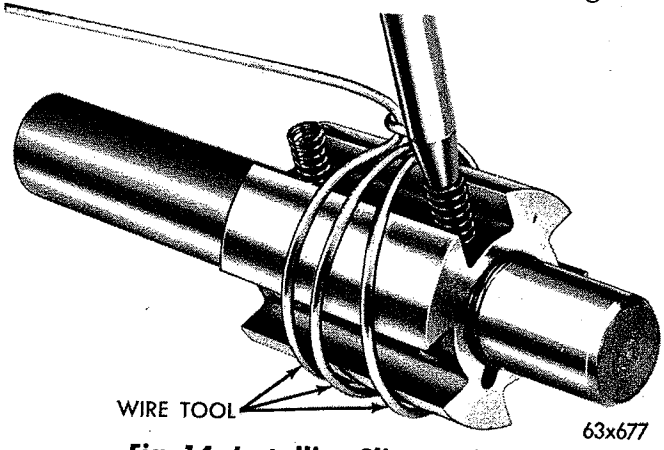


***Fig. 14—Installing Slipper Rings***

MyMopar.com

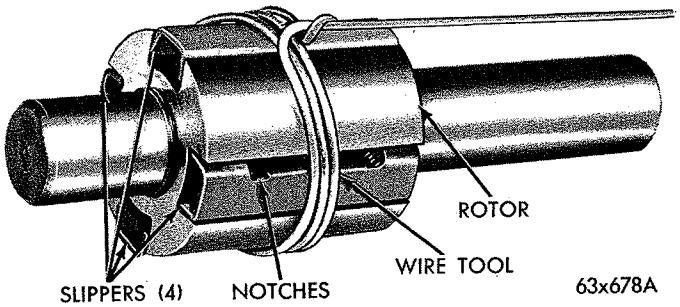


*Fig. 15—Slippers Installed in Rotor*

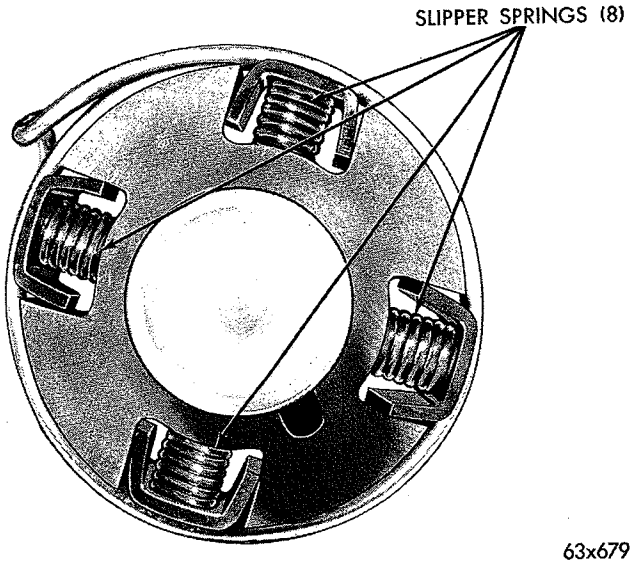


*Fig. 16—Slippers and Springs Installed in Rotor*

(Fig. 14). Bend ends of wire towards pulley end of shaft.

**Use caution in handling rotor to prevent damage to sharp corners which are necessary for good pump performance.**

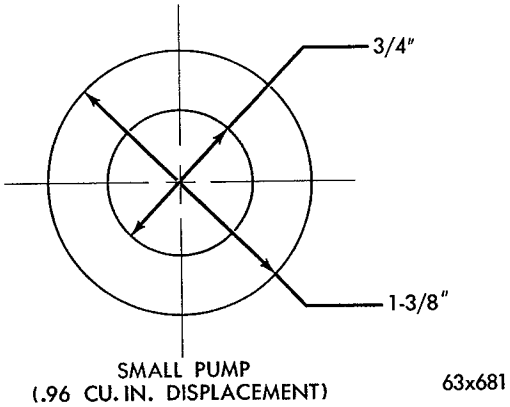


*Fig. 17—Slipper Retainer Tool (.96 Pump)*

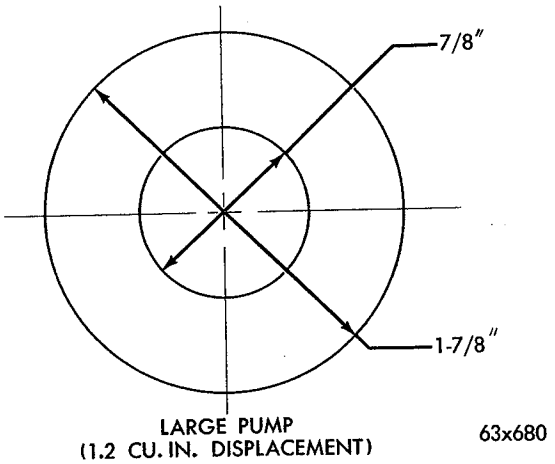


*Fig. 18—Slipper Retainer Tool (1.2 Pump)*

(8) Install springs by turning clockwise into pockets in rotor, using a pencil with point broken off (Fig. 14).

(9) Install each slipper by sliding between two springs and wire wrapping around rotor. The notched end must be installed as shown in Fig. 15.

(10) Inspect springs to make sure they are in pockets and in upright position under slipper (Fig. 16). Cocked springs will not right themselves, but will break in use.

(11) Install a washer of the dimensions shown in Fig. 17 or Fig. 18, over the pulley end of the shaft to keep the slippers flush with the end of the rotor throughout the assembly operation.

(12) Insert shaft and rotor assembly into pump cam insert so slippers are started in cam and shaft has entered pump body bearing housing (Fig. 19).

(13) Hold washer firm against rotor while removing wire and gently push rotor assembly down into cam-insert. The rotor will be flush with end of cam-insert

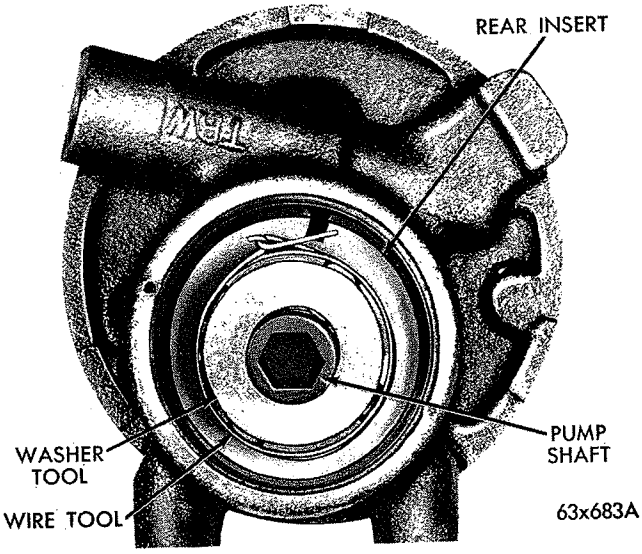


*Fig. 19—Installing Rotor, Shaft (1.2 Pump Shown)*

MyMopar.com

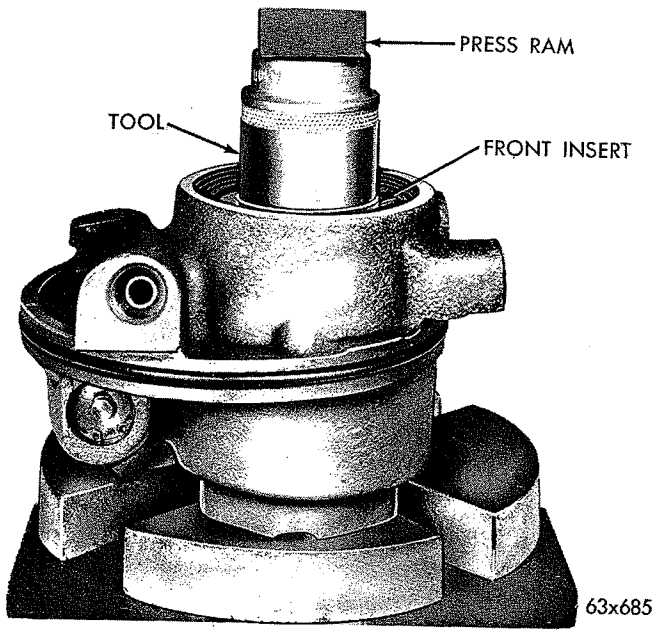


*Fig. 20—Pressing Front Insert into Pump Housing*

when fully inserted.

**The slipper ends may hang up in cam-insert ports during installation. Rotate shaft while installing to prevent this occurence.**

(14) Remove flat washer. Make sure slipper springs are in place by rotating shaft and looking through end of each slipper.

(15) Lubricate rotor assembly and rotate to make sure slippers do not bind.

(16) Replace shaft seal (See "Oil Seal Replacement") and "O" ring seal on front insert. Lubricate and position insert in pump body so punch marks align with punch marks on pump flange (Fig. 11).

(17) Support pump housing in an arbor press (Fig. 20), and using a 1¼ inch socket press insert into body making sure two punch marks remain aligned.

(18) Install spanner nut and tighten to its original position with a drift by aligning punch marks.

(19) Install pump pulley (Fig. 8), new "O" ring reservoir gasket, reservoir and pump brackets.

## PUMP INSTALLATION

(1) Position pump on engine and install retaining and locking bolt.

(2) Install drive belt and adjust. See "Cooling System—Group 7." Tighten pump bracket bolts to 30 foot-pounds.

(3) Connect pressure and return hoses, routing the hoses in same position they were in before removal.

(4) Fill pump reservoir with Power Steering Fluid, Part Number 2084329 or equivalent. See "Checking Fluid Level."

(5) Start engine and turn steering wheel all way from left to right to bleed system. Stop engine, check oil level and correct if necessary.

# SPECIFICATIONS

| | |
|---|---|
| Type | Constant Displacement—.96 Cu. In. per revolution<br>Constant Displacement—1.2 Cu. In per revolution |
| Maximum Pump Pressure | |
| .96 pump Valiant-Barracuda | 800 to 850 PSI |
| .96 pump Belvedere-Satellite-Fury I and II | 950 to 1000 PSI |
| 1.2 pump Fury II-111—318Cu. In. Engine | 900 to 1000 PSI |
| 1.2 pump Fury II-III—All except 318 Cu. In. Engine | 1000 to 1100 PSI |
| Fluid Flow | |
| 9.6 pump | |
| High Level | 2.5 to 3.0 gpm |
| Low Level | 1.2 to 1.8 gpm |
| 1.2 pump | 1.75 to 2.25 gpm |
| Type of Fluid | Power Steering Fluid—Part No. 2084329 or equivalent—**Do Not** use Type "A" Transmission Fluid |

# TIGHTENING REFERENCE

| | FOOT-POUNDS |
|---|---|
| Pump Inlet Fitting | 30 |
| Pump to Bracket Bolts (.96 Pump) | 30 |
| (1.2 Pump) | 35 |
| Reservoir to Pump Body Bolts | 10-15 |

MyMopar.com

MyMopar.com

# Plymouth

## SERVICE MANUAL 1966

### FOREWORD

This Plymouth Service Manual has been prepared with the latest service information available for use on 1966 models. Diagnosis, disassembly, repair, assembly and installation procedures coupled with complete specifications and tightening references can be found in each group. This publication is one of the most important "tools" available to the service technician. It will prove an invaluable aid in properly performing any phase of service necessary to maintain or restore the fine performance and reliability characteristics designed, engineered, and manufactured into these outstanding automobiles.

### PLYMOUTH MODELS

| | 1966 | |
|---|---|---|
| Valiant V-100, V-200, Signet and Barracuda | 6 Cyl. | BV-1 |
| Valiant V-100, V-200, Signet and Barracuda | 8 Cyl. | BV-2 |
| Belvedere I, II | 6 Cyl. | BR-1 |
| Belvedere I, II and Satellite | 8 Cyl. | BR-2 |
| Fury I, II, III | 6 Cyl. | BP-1 |
| Fury I, II, III and Sport Fury | 8 Cyl. | BP-2 |

| | 1965 | |
|---|---|---|
| Valiant V-100, V-200, Signet and Barracuda | 6 Cyl. | AV-1 |
| Valiant V-100, V-200, Signet and Barracuda | 8 Cyl. | AV-2 |
| Belvedere I, II | 6 Cyl. | AR-1 |
| Belvedere I, II and Satellite | 8 Cyl. | AR-2 |
| Fury I, II, III | 6 Cyl. | AP-1 |
| Fury I, II, III and Sport Fury | 8 Cyl. | AP-2 |

The service tools referred to in this Manual are available through Kelsey-Hayes Company, Miller Special Tools, 17640 Grand River, Detroit, Michigan 48227, U.S.A. unless otherwise specified.

Extra copies of this Manual are available at $5.00 each under Part Number 81-570-6450. Order from Chrysler-Plymouth Division, Service Department, P.O. Box 1658, Detroit, Michigan 48231.

### GROUP INDEX


- Introduction and General Specifications
- 0 Lubrication and Maintenance
- 1 Accessories—(Radios, Heaters, Mirrors)
- 2 Front Suspension
- 3 Rear Axle
- 5 Brakes—Service Parking
- 6 Clutch
- 7 Cooling System—Accessory Belt Drives
- 8 Electrical and Instruments
- 9 Engine—Engine Oiling
- 11 Exhaust System
- 14 Fuel System
- 16 Propeller Shaft and Universal Joints
- 17 Springs and Shock Absorbers
- 19 Steering Gear—Manual Power
- 21 Transmission—Standard Automatic
- 22 Wheels, Bearings and Tires
- 23 Body, Sheet Metal and Frame
- 24 Air-Conditioning



CHRYSLER - PLYMOUTH DIVISION

CHRYSLER MOTORS CORPORATION



Chrysler Corporation reserves the right to make changes in design or to make additions to or improvements in its product without imposing any obligations upon itself to install them on its products previously manufactured.



Litho in U. S. A.

35M SD & T 8-65

81-570-6450



MyMopar.com

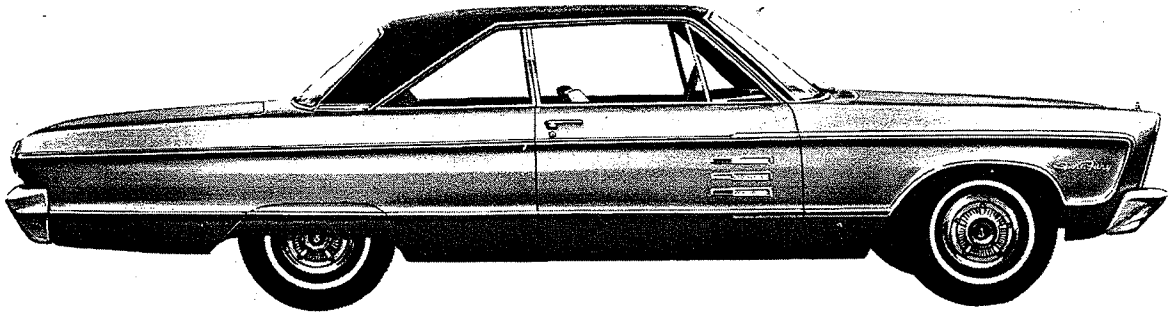

SPORT FURY 2-DOOR HARDTOP

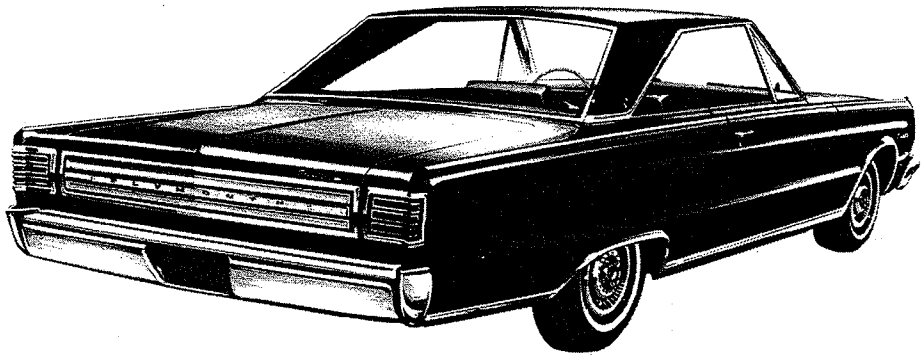

SATELLITE 2-DOOR HARDTOP

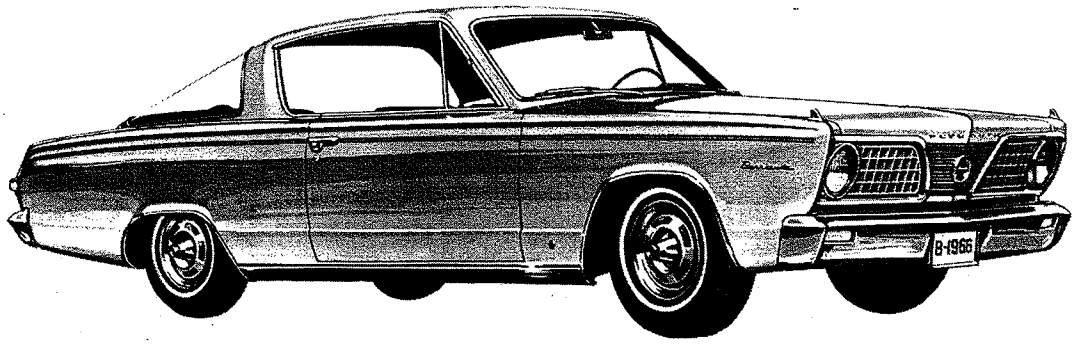


BARRACUDA

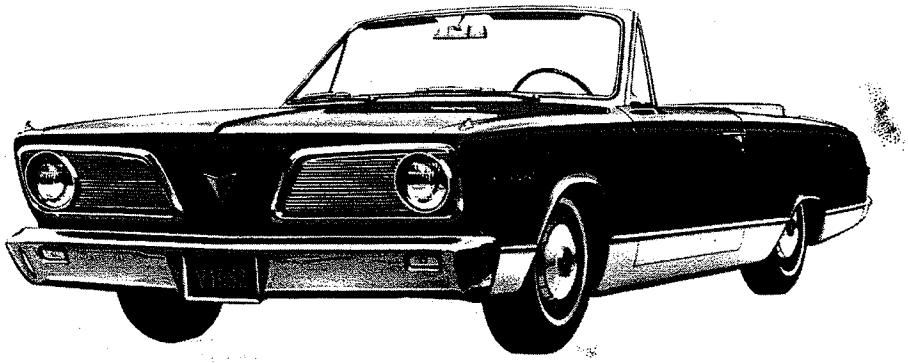

SIGNET CONVERTIBLE

NN807

***Fig. 1—1966 Plymouth Models***

MyMopar.com

# TRANSMISSIONS

## CONTENTS


| | Page | | Page |
|---|---|---|---|
| MANUAL TRANSMISSIONS—3 SPEED | 1 | SPECIFICATIONS | 97 |
| MANUAL TRANSMISSION—4 SPEED | 17 | TORQUEFLITE TRANSMISSIONS | 29 |


## MANUAL TRANSMISSIONS—3 SPEED (A-903 and A-745)

### INDEX


| | Page | | Page |
|---|---|---|---|
| Cleaning and Inspection | 9 | Service Out of Vehicle | 5 |
| General Information | 1 | Assembling the Transmission | 10 |
| Service Diagnosis | 1 | Disassembling the Transmission | 5 |
| Service In Vehicle | 2 | Transmission Installation | 13 |
| Extension Housing and Bushing | 4 | Transmission Removal | 5 |
| Extension Housing Yoke Seal | 4 | Specifications | 97 |
| Gearshift Linkage Adjustment | 2 | Steering Column and Gearshift | 13 |
| Speedometer Pinion | 3 | Tightening Reference | 99 |


### GENERAL INFORMATION

The three speed manual transmission used on 6-cylinder vehicles is referred to as Model A-903 (Fig. 1), and the three speed heavy duty manual transmission used on 8-cylinder vehicles is referred to as Model A-745 (Fig. 2). The Model A-745 is also used on 6-cylinder Models for Taxi and Police car operations.

The service procedures and illustrations for the two transmissions are combined in this manual. Where variations in procedures occur, the differences will be identified as A-903 or A-745. When replacement of parts is required, always refer to the Parts Catalog to make sure the correct part is being installed.

The three speed manual transmissions are of the synchromesh type with helical cut gears to provide silent operation. The countershaft gear is in constant mesh and is supported by roller bearings at each end.

The mainshaft front end is piloted in roller bearings in the end of the main drive pinion, and is supported by a ball bearing in the rear of the case. The rear end of the mainshaft is supported by the sliding yoke and bushing in the extension housing. The speedometer drive gear is integral with the mainshaft. **IMPORTANT: All transmissions have the sliding spline type output shaft. Whenever the propeller shaft front sliding yoke is removed from the transmission, it should be cleaned and relubricated as outlined in Group "0" of this Manual.**

### SERVICE DIAGNOSIS

| Condition | Possible Cause | Correction |
|---|---|---|
| **HARD SHIFTING** | (a) Incorrect clutch adjustment. | (a) Refer to the Clutch Group for corrections. |
| | (b) Improper cross-over adjustment. | (b) Perform the cross-over adjustment as outlined in "Gearshift Linkage Adjustments." |
| | (c) Synchronizer clutch sleeve damaged. | (c-d-e) Causes noted can only be corrected by disassembling the transmission and replacing damaged or worn parts. |
| | (d) Synchronizer spring improperly installed. | |
| | (e) Broken or worn synchronizer stop rings. | |
| **TRANSMISSION SLIPS OUT OF GEAR** | (a) Linkage interference. | (a) Inspect and remove all linkage interferences. |
| | (b) Gearshift rods out of adjustment. | (b) Adjust the gearshift rods as outlined in "Gearshift Linkage Adjustments." |
| | (c) Second or direct speed gear synchronizer clutch teeth worn. | (c) Disassemble the transmission and replace parts as necessary. |
| | (d) Clutch housing bore or face out of alignment. | (d) Refer to the Clutch Group for correction procedures. |

MyMopar.com

| Condition | Possible Cause | Correction |
|---|---|---|
| TRANSMISSION NOISES | (a) Excessive end play in the countershaft gear. | (a) Replace the thrust washers. |
| | (b) Loose synchronizer hub spline fit on mainshaft. | (b) Inspect the mainshaft and synchronizer hub and replace parts as necessary. |
| | (c) Loose spline fit on low speed sliding to mainshaft spline. | (c) Inspect the low speed sliding gear and mainshaft. Replace parts as necessary. |
| | (d) Damaged, broken or excessively worn gear teeth. | (d) Replace the worn gears. |
| | (e) Drive pinion bearing worn. | (e) Replace the worn bearing. |

## SERVICE PROCEDURES

### SERVICE IN VEHICLE

### GEARSHIFT LINKAGE ADJUSTMENT

(1) With 2nd and 3rd control rod disconnected from lever on the column and 1st and reverse control rod disconnected from transmission lever, position both transmission levers in neutral. (The neutral detent balls must be engaged to make this adjustment correctly.) To check this, start engine (with clutch disengaged) then release the clutch slowly.

(2) Inspect fore and aft movement of shift levers in the steering column. If movement at outer end of levers exceeds 1/16 inch, loosen the two upper bushing screws (Fig. 3) and rotate bushing (downward) until all free play of levers has been removed. Retighten bushing screws securely.

(3) Install a wedge or suitable tool between cross-over blade and 2nd and 3rd lever, so that cross-over blade is engaged with both lever cross-over pins.

(4) Adjust length of 2nd and 3rd control rod until stub shaft of control rod or swivel enters hole in the column lever (Fig. 4 or 5). Install washer and clip to secure and tighten swivel lock nut to 70 inch-pounds.

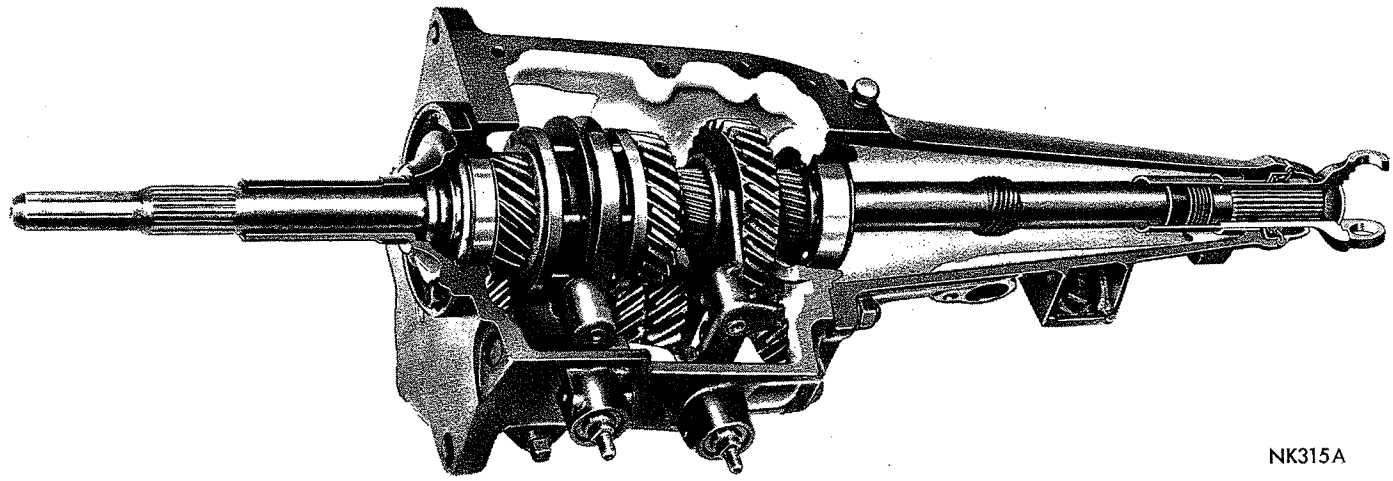


*Fig. 1—A-903 Three Speed Transmission*

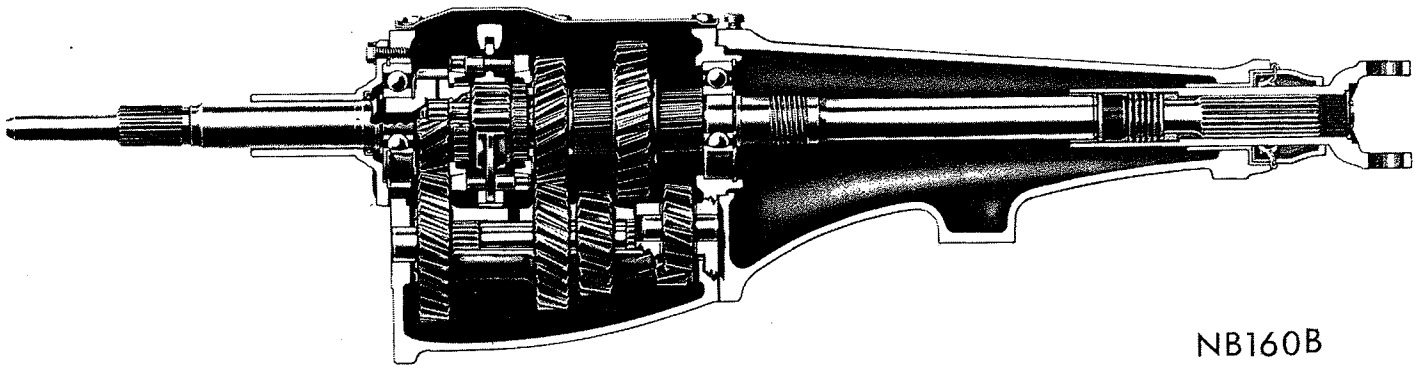


*Fig. 2—A-745 Three Speed Transmission*

MyMopar.com

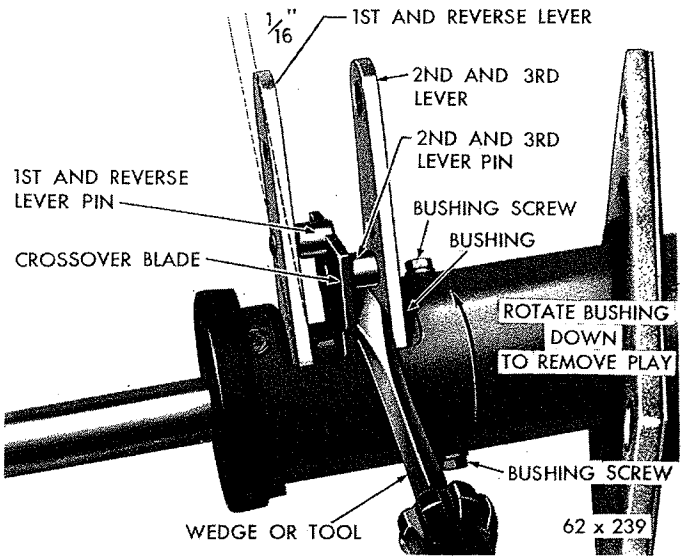


***Fig. 3—Gearshift Lever Adjustment***

During above setting, the 2nd and 3rd control rod should be adjusted to also position selector lever (on column) 5 degrees above horizontal level on 116 and 119 inch wheelbase cars, and 10 degrees on 106 inch wheelbase cars (transmission in neutral).

(5) Slide clamp and swivel (on end of 1st and reverse control rod) either **in** or **out,** until swivel stub shaft enters hole in the transmission lever (Fig. 4 or 5). Install washers and clip to secure. Determine mid back-lash position in linkage, then tighten control rod lock nut.

(6) Remove positioning wedge or tool from cross-over blade and lever, then move selector lever through all positions to check adjustments and to insure cross-over smoothness.

### *Gearshift Interlock—(A-745 Transmission)*

(7) Shift transmission into neutral (Fig. 6). Make sure clutch pedal free play is adjusted to specifications.

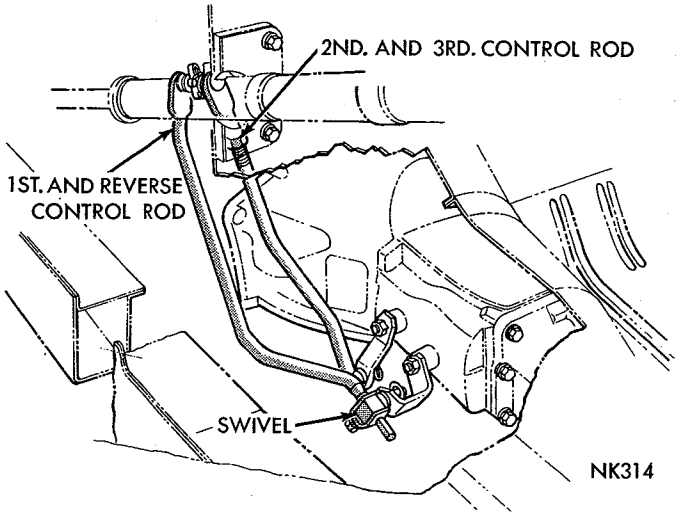


***Fig. 4—A-903, A-745 Gearshift Controls (Valiant Models)***

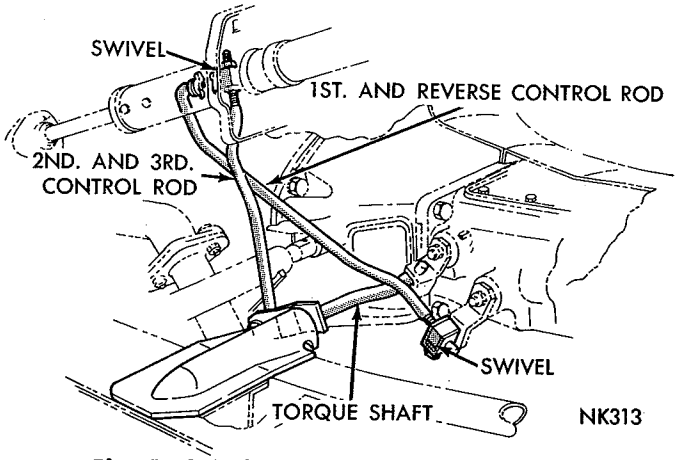


***Fig. 5—A-903, A-745 Gearshift Controls (Belvedere, Fury Models)***

(8) Loosen clutch interlock rod swivel clamp bolt; hold clutch pedal to its fully returned position. Slide swivel along interlock rod to fully engage pawl with lever, then tighten swivel clamp bolt.

**CAUTION: Do not pull interlock rod rearward to engage swivel in the pawl.**

(9) Shift transmission in normal manner from neutral to first, and from neutral to reverse (disengage clutch while shifting and engage clutch when in gear). If operation is not normal; perform the following steps:

(a) Disconnect interlock rod from pawl and check clutch pedal free play.

(b) Connect interlock rod and re-adjust as in step (8).

(10) Disengage the clutch. Shift transmission halfway between neutral and first. Let out the clutch pedal. The interlock when properly adjusted should allow pedal to return to about one inch from the floor.

## SPEEDOMETER PINION

### *Removal and Installation*

Rear axle gear ratio and tire size determines pinion gear size requirements. Refer to "Speedometer Pinion Chart" for pinion usage.

(1) Remove bolt and retainer securing speedometer pinion adapter in the extension housing (Fig. 7).

(2) With cable housing connected, carefully work adapter and pinion out of extension housing.

(3) If transmission fluid is found in cable housing, replace seal in adapter (Fig. 8).

(4) Select pinion range numbers on outside of adapter to correspond with number of pinion teeth.

(5) Install adapter in pinion housing with pinion range numbers aligned with 6 o'clock position (Fig. 7).

(6) Install retainer and bolt, with retainer tangs in adapter positioning slots. Tap adapter firmly into extension housing and tighten retainer bolt to 100 inch-pounds.

MyMopar.com

## SPEEDOMETER PINION CHART
## A-903 AND A-745—3 SPEED
## OUTPUT SHAFT DRIVE GEAR—13 TEETH

| Tire Size | Axle Ratios Number of Pinion Gear Teeth and Color | | | |
|---|---|---|---|---|
| | 2.93:1 | 3.23:1 | 3.55:1 | 3.91:1 |
| 6.50-13 | 32—Black | 35—Orange | 38—Blue | 42—White |
| 7.00-13 | 31—Green | 34—Green | 38—Blue | 41—Red |
| 6.95-14 | 31—Green | 34—Green | 37—White | |
| 7.35-14 | 30—Yellow | 33—Yellow | 36—Red | 40—Orange |
| 7.75-14 | 29—Black | 32—Black | 35—Orange | 39—Green |
| 8.25-14 | 29—Black | 32—Black | 35—Orange | 38—Blue |
| 8.55-14 | 28—Blue | 31—Green | 34—Green | 37—White |
| 7.75-15 | 29—Black | 32—Black | 35—Orange | 39—Green |
| 8.15-15 | 29—Black | 32—Black | 35—Orange | 38—Blue |
| 8.45-15 | 28—Blue | 31—Green | 34—Green | 37—White |

## EXTENSION HOUSING AND BUSHING

### *Removal*

(1) Disconnect propeller shaft at rear universal joint. Carefully pull shaft yoke out of transmission extension housing.

**CAUTION: Be careful not to scratch or nick ground surface on sliding spline yoke during removal and installation of the shaft assembly.**

(2) Remove the speedometer pinion and adapter, refer to Page 3.

(3) Remove bolts securing extension housing to crossmember. Raise transmission slightly with service jack and remove center crossmember.

(4) Remove extension housing to transmission bolts and slide extension housing off the mainshaft.

**NOTE: To replace the extension housing bushing, refer to Page 12.**

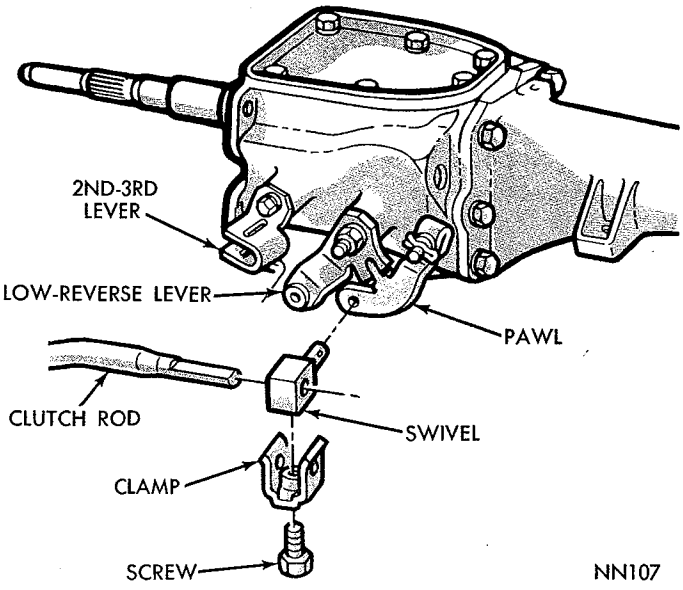


*Fig. 6—Gearshift Interlock*

### *Installation*

(1) Using a new gasket, slide extension housing over mainshaft and down against the case. Install and tighten attaching bolts to 50 foot-pounds.

(2) Install center crossmember and tighten retaining bolts securely. Lower transmission, install extension housing to crossmember bolts and tighten to 50 foot-pounds.

(3) Install the speedometer pinion and adapter, refer to Page 3.

(4) Clean and lubricate sliding spline yoke as outlined in Group 0 in this Manual. Carefully guide front universal joint yoke into extension housing and onto mainshaft splines. Connect propeller shaft to rear axle pinion yoke.

## EXTENSION HOUSING YOKE SEAL

### *Replacement*

(1) Disconnect propeller shaft at rear universal joint. Carefully pull shaft yoke out of transmission extension housing.

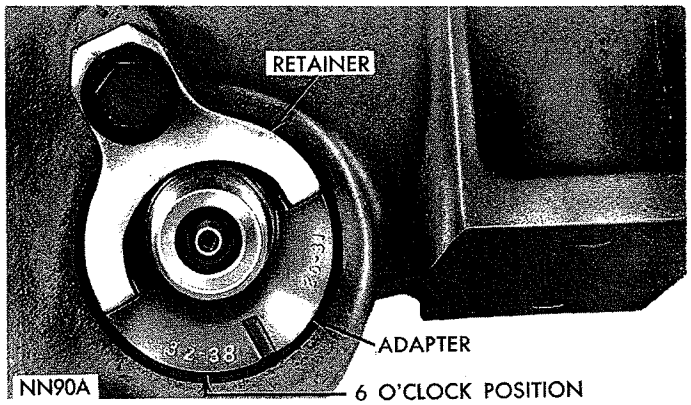


*Fig. 7—Speedometer Pinion and Adapter—Installed*

MyMopar.com

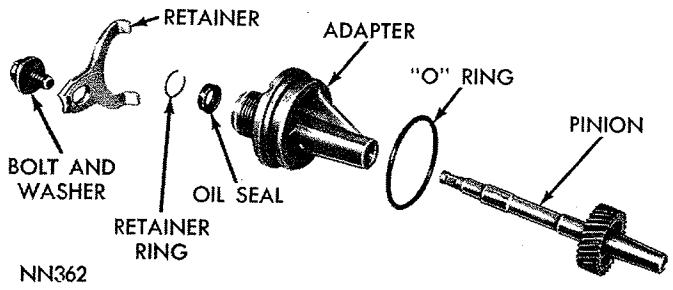


*Fig. 8—Speedometer Drive—Disassembled*

**CAUTION: Be careful not to scratch or nick ground surface on sliding spline yoke during removal and installation of the shaft assembly.**

(2) Remove the extension housing yoke seal (Fig. 9) with Tool C-3994 or C-3985.

(3) To install a new seal, position seal in opening of extension housing and drive it into housing with Tool C-3995 or C-3972 (Fig. 10).

(4) Carefully guide front universal joint yoke into extension housing and on the mainshaft splines. Connect propeller shaft to rear axle pinion shaft yoke.

## SERVICE OUT OF VEHICLE

## TRANSMISSION REMOVAL

### *Removal*

(1) Drain lubricant from the transmission.

(2) Disconnect propeller shaft at rear universal joint. Carefully pull shaft yoke out of transmission extension housing.

**CAUTION: Be careful not to scratch or nick ground surface on sliding spline yoke during removal and installation of the shaft assembly.**

(3) Disconnect the speedometer cable and back-up light switch leads.

(4) Install engine support fixture C-3487, mounting firmly into the holes in side frame members with support ends up against underside of oil pan flange. Use Adapter Leg C-3806 on 6-cyl. engines.

(5) Adjust fixture to support weight of engine, then raise engine slightly and remove the rear support crossmember attaching bolts.

(6) Support transmission, using a suitable jack and then remove bolts that attach transmission to the clutch housing.

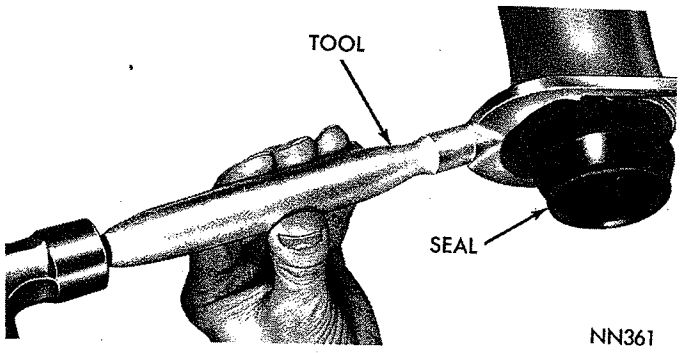


*Fig. 9—Removing Extension Housing Yoke Seal*

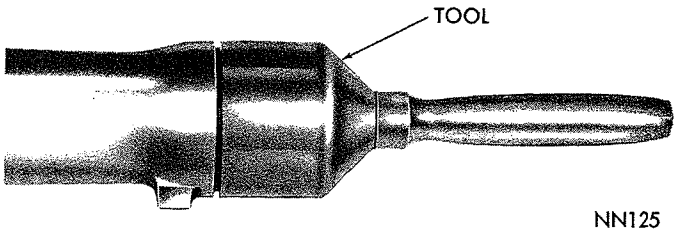


*Fig. 10—Installing Extension Housing Yoke Seal*

(7) Slide transmission rearward until pinion shaft clears clutch disc before lowering the transmission. (This precaution will avoid damaging the clutch disc.)

(8) Lower transmission and remove from under the vehicle.

(9) Remove rear motor support and crossmember, then mount the transmission in repair stand DD-1014.

## DISASSEMBLING THE TRANSMISSION

To disassemble transmission for cleaning and overhaul, refer to (Fig. 11 or 12), then proceed as follows:

(1) Remove bolts that attach cover to the case. Remove cover then discard the gasket.

(2) Using a pair of feeler gauges, measure synchronizer float. The measurement of the "float" should be taken before any further disassembly of transmission is attempted.

(3) The synchronizer "float" should be between .050 and .090 inch, when measured between synchronizer outer ring pin and opposite synchronizer outer ring (Fig. 13). This measurement must be made on two pins, 180 degrees apart with equal gap on both ends for "float" determination.

(4) There should be a snug fit between pins and outer rings, similar to that obtained when measuring with a micrometer.

### *Extension Housing*

(1) Remove bolt and retainer securing speedometer pinion adapter in the extension housing (Fig. 7). Carefully work adapter and pinion out of the extension housing.

(2) Remove bolts and one nut that attaches extension housing to the transmission case. Slide extension housing off the mainshaft.

(3) Unwind and slide yoke seal rear stop ring from the mainshaft (Fig. 14). Slide seal and front stop ring off the shaft.

### *Drive Pinion*

(1) Remove bolts that attach main drive pinion bearing retainer, then slide retainer off the pinion. Discard gasket and drive seal out of retainer, using a suitable drift.

(2) Grasp pinion shaft and pull assembly out of the case slightly, then slide synchronizer front inner stop

MyMopar.com

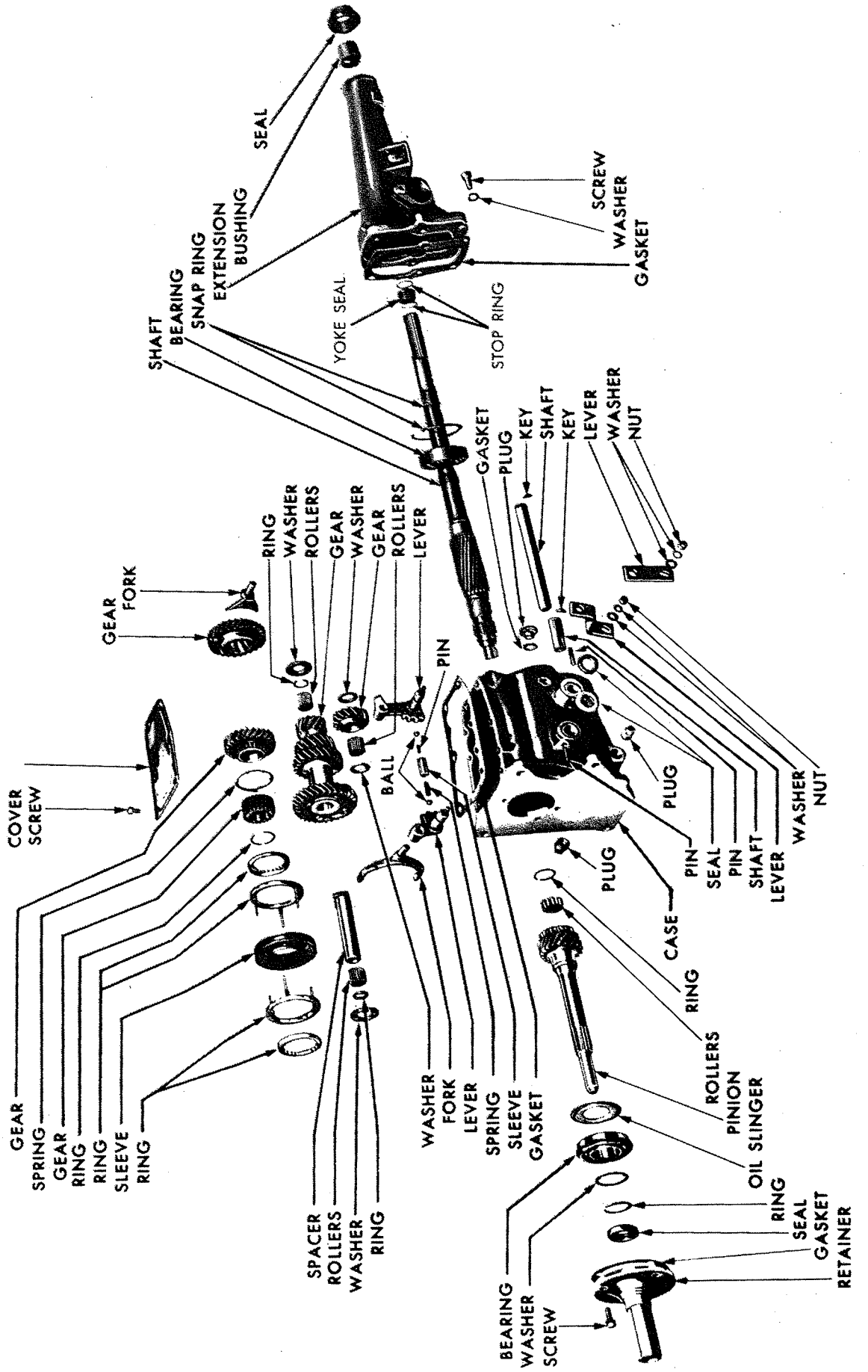


*Fig. 11—A-903 Transmission—Disassembled*

MyMopar.com

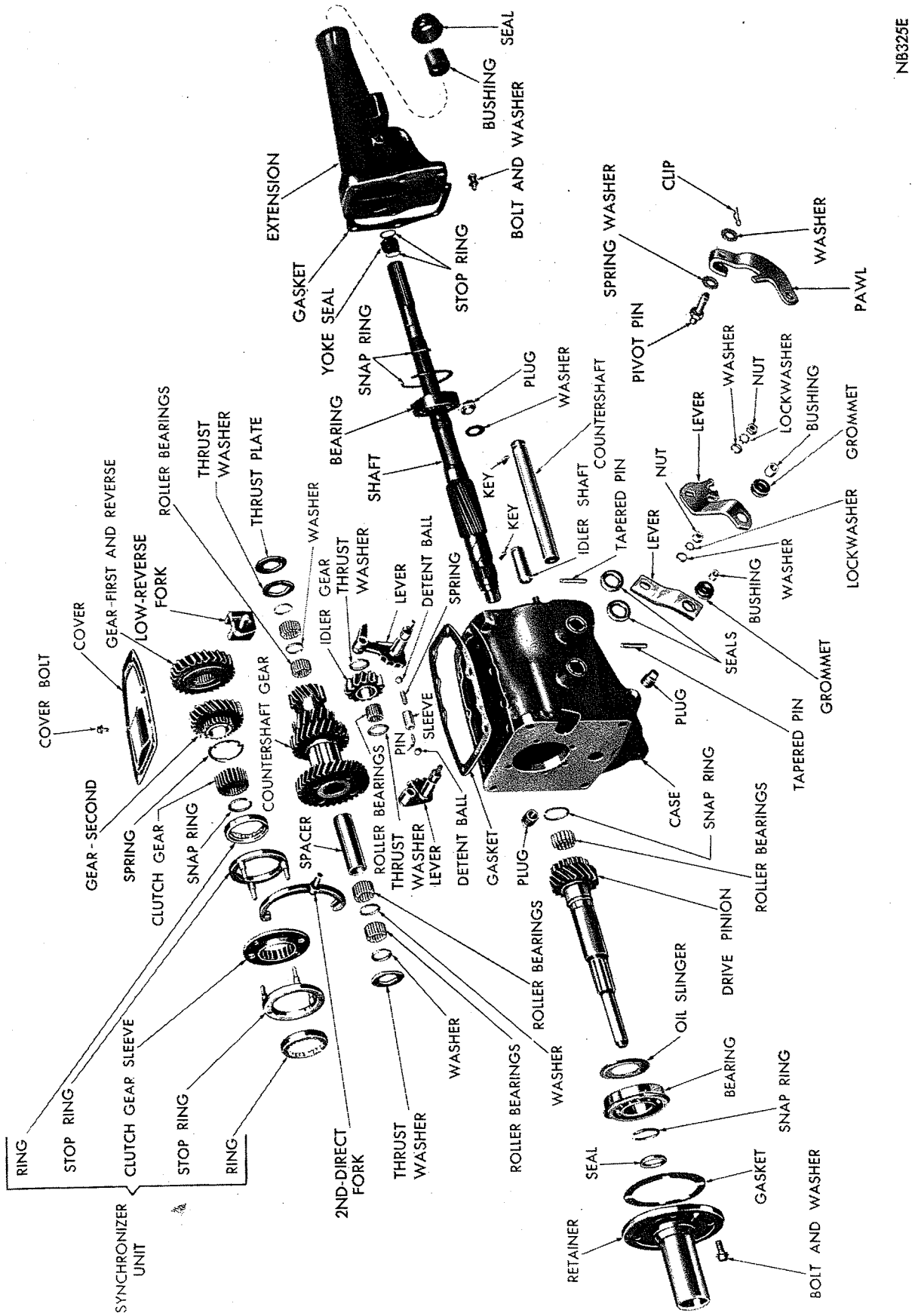


*Fig. 12—A-745 Transmission—Disassembled*

MyMopar.com

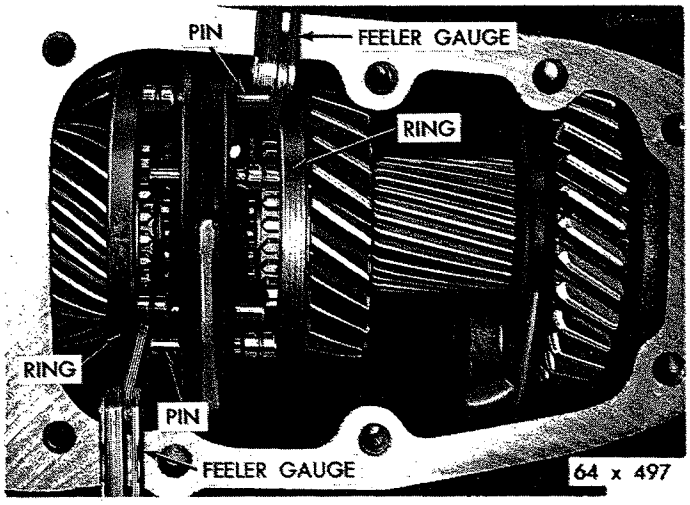


*Fig. 13—Measuring Synchronizer "Float"*

ring from the short splines on pinion as pinion assembly is being removed from the case (Fig. 15).

(3) Remove snap ring (Fig. 16), which locks main drive pinion bearing on the pinion shaft. Remove pinion bearing washer, then carefully press pinion shaft out of bearing, using an arbor press. Remove oil slinger.

(4) Remove snap ring and bearing rollers from cavity in end of the drive pinion. **A-903-14 rollers, A-745-15 rollers.**

### Mainshaft

(1) With transmission in reverse, remove mainshaft rear bearing outer snap ring, using a hook or a flat blade, then partially remove the mainshaft.

(2) Cock mainshaft, then remove clutch sleeve, outer synchronizer rings, front inner ring and 2-3 shift fork (Fig. 17 or 18).

(3) Remove clutch gear retaining snap ring, using snap ring pliers (Fig. 19). Slide clutch gear off end of the mainshaft.

(4) Slide second speed gear, stop ring and synchronizer spring off the mainshaft (Fig. 20).

(5) Remove low and reverse sliding gear and shift fork (Fig. 21), as mainshaft is completely withdrawn from the case.

### Countershaft Gear

(1) Using a feeler gauge measure end play of countershaft gear (Fig. 22). The end play should be from .0045 to .028 inch. This measurement will determine if new thrust washers are to be installed at reassembly.

(2) Using countershaft bearing arbor, Tool C-578 for A-903 transmission or C-3834 for A-745 transmission, drive countershaft toward rear of case until small key can be removed from the countershaft.

(3) Drive countershaft remaining way out of case, keeping arbor tight against end of countershaft to prevent loss of the bearing rollers.

(4) Remove countershaft gear, thrust washers and thrust plate from the case.

(5) Remove bearing rollers, washers and center spacer from the countershaft gear.

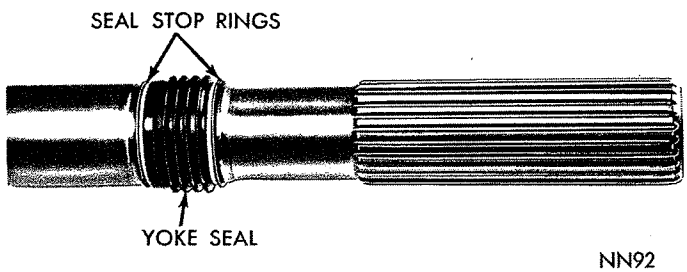


*Fig. 14—Sliding Spline Yoke Seal*

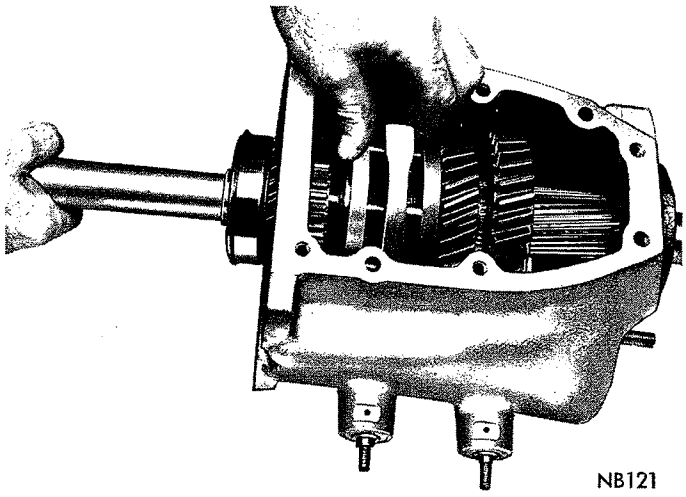


*Fig. 15—Removing Drive Pinion Assembly*

### Reverse Idler Gear

(1) Using a suitable drift, drive reverse idler gear shaft towards rear and out of the case. Remove woodruff key from end of the shaft.

(2) Lift reverse idler gear, thrust washers and bearing rollers (22) out of the case. Remove bearing rollers from the gear.

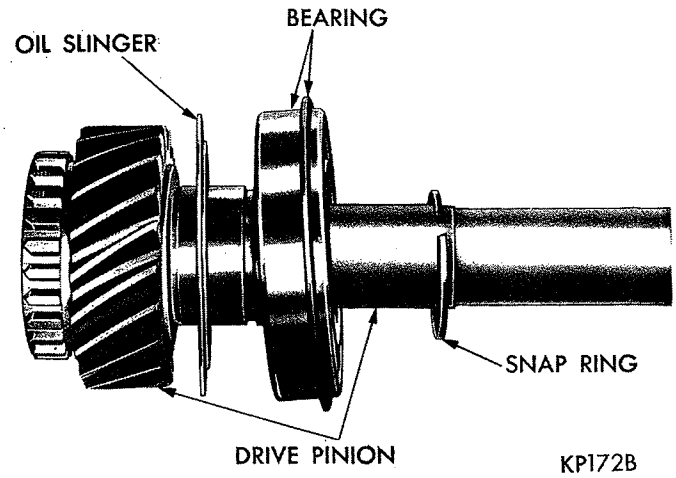


*Fig. 16—Drive Pinion Assembly*

MyMopar.com

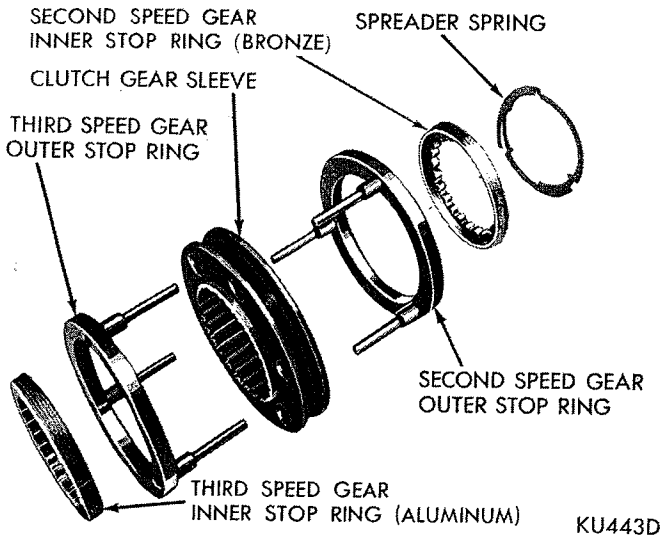


*Fig. 17—A-903 Synchronizer Unit*

### Gearshift Mechanism

(This operation need only be done if the seals are leaking.)

(1) Remove operating levers from their respective shafts.

(2) Drive out tapered retaining pin from either of the two lever shafts, then withdraw levershaft from inside the transmission. (The detent balls are spring loaded; as shaft is being withdrawn, the ball will drop to bottom of the case.)

(3) Remove interlock sleeve, spring, pin and both balls from the case (Fig. 23 or 24). Drive out remaining tapered pin, then slide lever shaft out of the transmission.

(4) Using a suitable drift, drive out lever shaft oil seals.

## CLEANING AND INSPECTION

Clean transmission case thoroughly, using a suitable solvent, dry with compressed air. Inspect case for cracks, stripped threads in various bolt holes and machined mating surfaces for burrs, nicks or any condition that would render case unfit for further service.

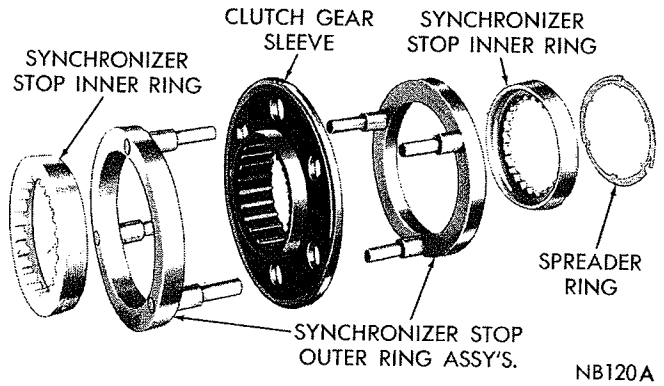


*Fig. 18—A-745 Synchronizer Unit*

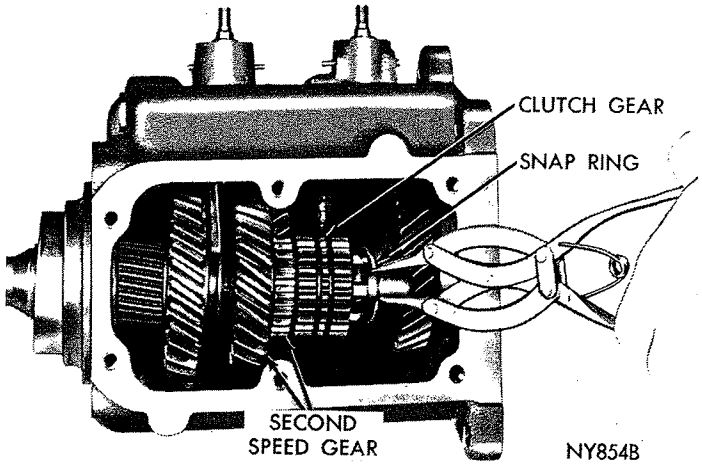


*Fig. 19—Removing or Installing Snap Ring*

The front mating surface should be smooth; if any burrs are present, dress them off with a fine mill file. If threads are stripped, install Helicoil inserts.

### Ball Bearings

Wash ball bearings, using a clean solvent and blow dry with compressed air.

**CAUTION: Do not spin bearings with air pressure; turn slowly by hand. Spinning unlubricated bearings may cause damage to the races and balls.**

Be sure ball bearings are clean, then lubricate them with light grade engine oil. Inspect bearings for roughness. This can best be determined by slowly turning outer race by hand. Measure fit of bearings on their respective shafts.

### Needle Type Bearing Rollers and Spacers

Inspect all bearing rollers for flat spots or brinnelling. Inspect all bearing roller spacers for signs of wear or galling. Install new parts as required.

### Gears

Inspect gear teeth on synchronizer clutch gears and stop rings. If there is evidence of chipping or exces-

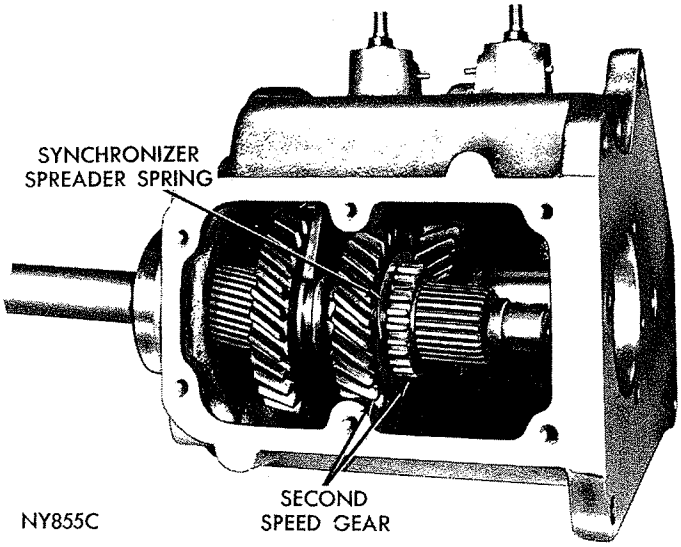


*Fig. 20—Mainshaft Assembly*

MyMopar.com

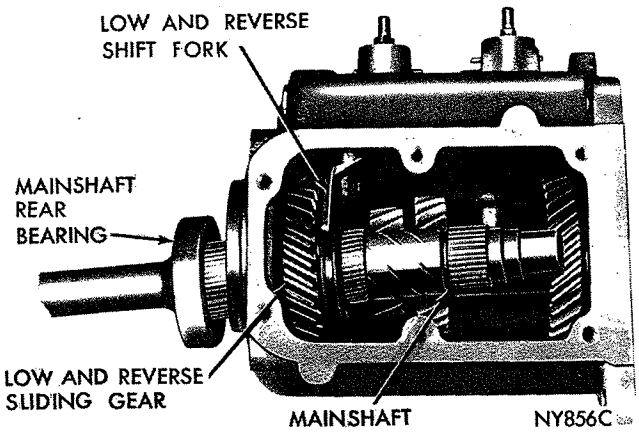


*Fig. 21—Removing or Installing Mainshaft*

sively worn teeth, install new parts at reassembly. Be sure clutch sleeve slides easily on the clutch gear. Inspect countershaft gear and all sliding gear teeth for chipped or broken teeth, or showing signs of excessive wear. Small nicks or burrs must be stoned off.

Inspect teeth on main drive pinion. If excessively worn, broken or chipped, a new pinion should be installed.

Test interlock sleeve and pin for free movement in bore of the shift housing. Examine detent balls for signs of brinelling. If lever detents show signs of excessive wear to extent of not locking in gear, install a new part. Inspect shift forks for wear on the shanks and pads.

### *Synchronizer Stop Rings*

Inspect gear teeth and threads on synchronizer inner stop rings for broken teeth or worn threads. Inspect pins on synchronizer outer stop ring assembly for being straight and attached securely. Replace parts as required.

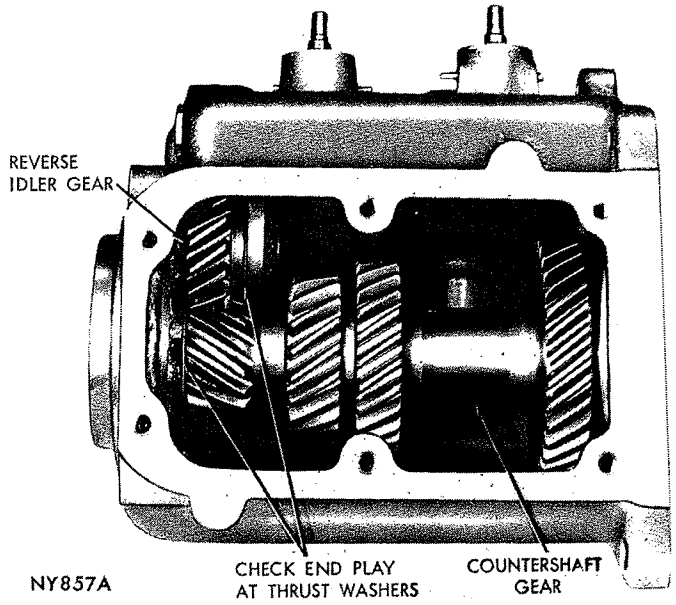


*Fig. 22—Countershaft and Reverse Idler Gear*

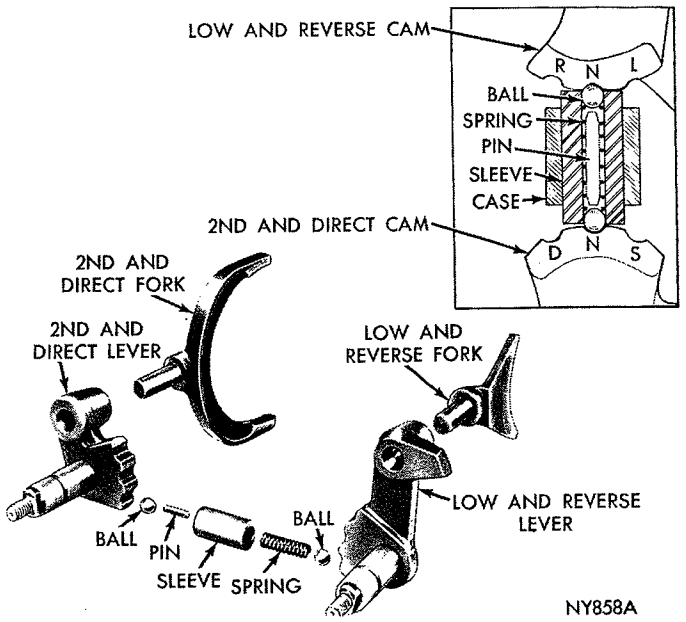


*Fig. 23—A-903 Shift Forks and Levers*

### *Mainshaft*

Inspect mainshaft gear and bearing mating surfaces. If gear contact surfaces show signs of galling or are excessively worn, a new mainshaft should be installed.

Inspect snap ring grooves for burred edges. If rough or burred, remove condition using a fine file or crocus cloth. Inspect synchronizer clutch gear teeth on the shaft for burrs.

## ASSEMBLING THE TRANSMISSION

### *Countershaft Gear*

To reassemble transmission, refer to (Fig. 11 or 12),

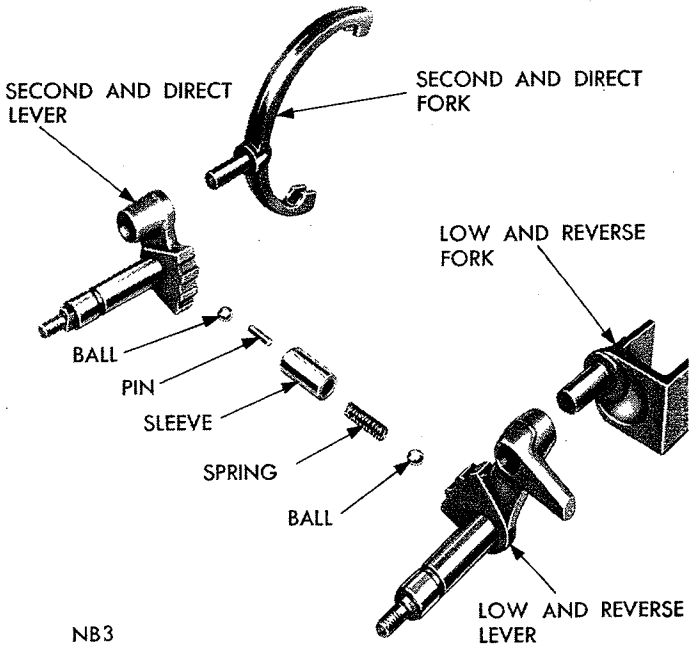


*Fig. 24—A-745 Shift Forks and Levers*

MyMopar.com

then proceed as follows:

(1) Slide countershaft gear bearing roller spacer over arbor Tool C-578 for A-903 transmission or C-3834 for A-75 transmission. Coat bore of gear with lubricant and slide tool and spacer in the gear bore.

(2) **A-903:** Lubricate bearing rollers with heavy grease and install 22 rollers in each end of gear in area around the arbor. Coat with heavy grease and install bearing spacer rings in each end of the gear.

**A-745:** Lubricate bearing rollers with heavy grease and install 22 rollers next to spacer in each end of gear in area around the arbor. Place a bearing spacer ring in each end of gear next to bearing rollers and install another row of 22 rollers in each end. Coat with heavy grease and install bearing spacer in each end of the gear.

(3) **If countershaft gear end play was found to exceed .028 inch during disassembly, install new thrust washers.**

**A-903:** Coat with heavy grease and install thrust washer at each end of countershaft gear and over the arbor. Install gear and arbor in the case making sure tabs on thrust washers slide into grooves in the case.

**A-745:** Coat with heavy grease and install front thrust washer over arbor at front of countershaft gear, with tabs outward. Install tabbed rear thrust washer over arbor with tabs positioned in grooves in the gear.

Install remaining rear thrust washer plate over arbor at rear of the gear. The washer plate must be installed so step on plate will engage on ledge inside rear of the case, thus preventing plate rotation. Install gear and arbor in the case making sure front thrust washer tabs slide into grooves in the case, and rear thrust washer step engages on the ledge.

(4) Using countershaft and a soft hammer, drive arbor forward out of countershaft gear and through bore in front of the case. Before driving countershaft all way into case, be sure keyway is positioned in line with key recess in rear of case. Insert shaft key and continue to drive countershaft forward in case until key is bottomed in recess.

### Reverse Idler Gear

(1) Position arbor Tool C-464 in reverse idler gear and using heavy grease, install 22 roller bearings in the gear.

(2) Place front and rear thrust washers at each end of reverse idler gear, and position assembly in transmission case with chamfered end of gear teeth toward the front.

(3) Insert reverse idler shaft into bore at rear of case with keyway to rear, pushing arbor toward front of the transmission.

(4) With keyway aligned with recess in case, drive shaft forward, inserting key before keyway is obscured. Continue driving shaft forward until key seats in recess.

### Gearshift Mechanism

To install gearshift mechanism, refer to (Fig. 23 or 24), then proceed as follows:

(1) Place new shift lever shaft seals centered in their bores in the case. Using Tool C-3766, drive both seals into the case, until tool bottoms.

(2) Install seal protector, Tool C-3767 on end of low and reverse lever shaft, then slide shaft into rear boss of the case and through the seal. Lock in position with tapered pin. Turn lever until center detent is in line with the interlock bore.

(3) Slide interlock sleeve in its bore in the case followed by one of the interlock balls. Install interlock spring and pin.

(4) Place remaining interlock ball on top of interlock spring, using Tool C-3765 (Fig. 25). (A good method of installing second ball is to stick ball in the tool recess by means of lubricant, then use tool to position ball on the detent spring.)

(5) Install seal protector Tool C-3767, on second and high lever shaft, depress interlock ball, using Tool C-3765 and at same time install the second and high lever, with center detent (neutral) aligned with detent ball. Remove the tool. Secure lever shaft with the remaining tapered pin.

(6) Install operating levers, install and tighten retaining nuts securely.

(7) Place low and reverse fork in the lever shaft, with offset toward rear of transmission.

### Mainshaft

(1) While holding low and reverse sliding gear in position in fork (Fig. 21), insert mainshaft with rear bearing through rear of case and into the sliding gear.

**A-745:** Position low-reverse sliding gear **with hub extension toward rear** to prevent interference in the straddle type shift fork.

(2) Place synchronizer spreader spring, and then

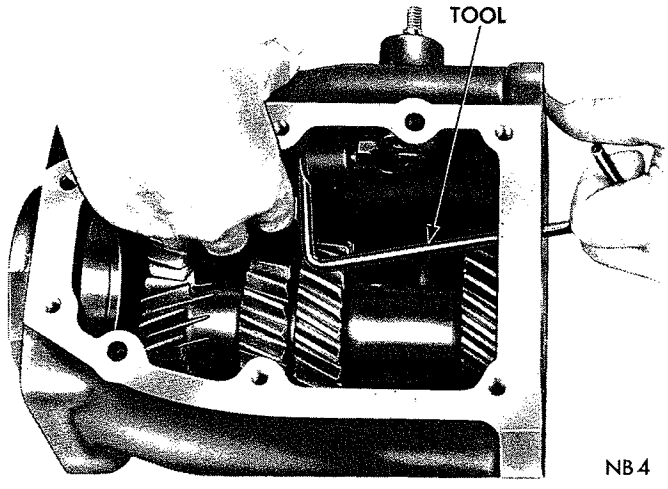


***Fig. 25—Installing Detent Balls***

MyMopar.com

rear stop ring on synchronizer splines of 2nd speed gear. Install 2nd speed gear on the mainshaft, (and/or shims if required).

In cases where synchronizer "float" measurement was above .090 inch, synchronizer shims should be installed to reduce "float" to .090 inch or less. Install shim on shoulder of second speed gear, before spreader spring is installed (Fig. 26).

If synchronizer "float" is below .050 inch, an equal amount of material should be removed from ends of all six synchronizer pins until the synchronizer "float" is above .050 inch.

(3) Install synchronizer clutch gear on the mainshaft. Install synchronizer clutch gear snap ring in the mainshaft groove. Make certain ring is bottomed all way around in the groove.

(4) Measure clearance between clutch gear and 2nd speed gear. Clearance should be .004 to .014 inch. End play in excess of .014 inch may cause 2nd speed gear "Jump out."

(5) **A-903:** Install 2nd and direct fork in lever shaft with offset toward rear of transmission (Fig. 23).

**A-745:** Install 2nd and direct fork in the lever shaft (Fig. 24).

Hold synchronizer clutch gear sleeve and two outer rings together, with pins properly entered in holes in the clutch gear sleeve. Engage 2nd and direct fork with the clutch gear sleeve.

(6) While holding synchronizer parts and fork in position, slide mainshaft forward, entering synchronizer clutch gear into clutch gear sleeve and at same time entering mainshaft rear bearing in the case bore. **If synchronizer parts are not positioned as described in steps 5 and 6, it will not be possible to place them in position after mainshaft is fully in position, due to interference with countershaft gear.**

(7) While continuing to hold synchronizer parts in position, tap mainshaft forward until rear bearing bottoms in the case bore.

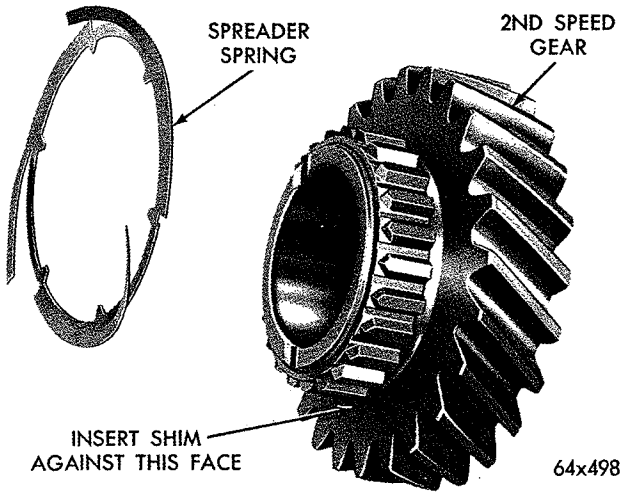


***Fig. 26—Synchronizer "Float" Shim Location***

(8) Install mainshaft rear bearing snap ring in groove in the case bore. **This snap ring is a select fit.**

(9) Unwind and slide yoke seal front stop ring into place on the mainshaft (Fig. 14). Slide seal on the shaft with lips of seal toward rear, then install rear snap ring.

### *Drive Pinion*

(1) Slide oil slinger (if removed) over pinion shaft and down against the gear (Fig. 16).

(2) Slide bearing over pinion shaft (snap ring groove away from gear end), then seat on the shaft, using an arbor press.

**A-903:** Install keyed washer between bearing and the retaining snap ring.

(3) Secure bearing and washer with selected thickness snap ring. Four snap rings are available to eliminate end play (same thickness as clutch gear and mainshaft snap rings).

Be sure snap ring is properly seated. If large snap ring around the bearing was removed, install at this time.

(4) Place pinion shaft in a vise (with soft jaws), then install bearing rollers in cavity of the shaft. 14 rollers for the A-903 transmission and 15 rollers for the A-745 transmission. Coat bearing rollers with heavy grease, then install bearing retaining ring in its groove.

(5) Install third gear inner stop ring (Fig. 17 or 18) in third gear outer stop ring. Guide drive pinion through front of case and engage inner stop ring with clutch teeth, then seat the pinion bearing. The pinion shaft bearing is fully seated when snap ring is in full contact with the case.

(6) Install a new seal in pinion bearing retainer, using Tool C-3789.

(7) Using a new gasket, install drive pinion and retainer in the case. Install attaching bolts and tighten to 35 foot-pounds.

### *Extension Housing*

(1) If extension housing bushing requires replacement, drive out the oil seal with a suitable tool. Be sure not to damage oil seal surface in the housing.

(2) Drive the bushing out of housing (Fig. 27) with Tool C-3996 or C-3974.

(3) Slide a new bushing on installing end of Tool C-3996 or C-3974. Align oil hole in bushing with oil slot in the housing, then drive bushing into place (Fig. 27).

(4) Drive a new oil seal into housing with Tool C-3995 or C-3972 (Fig. 10).

(5) Using a new gasket, slide the extension housing over mainshaft while guiding shaft through bushing and oil seal. Install and tighten attaching bolts to 50 foot-pounds.

(6) Install transmission gasket and cover, install and tighten cover bolts to 15 foot-pounds.

MyMopar.com

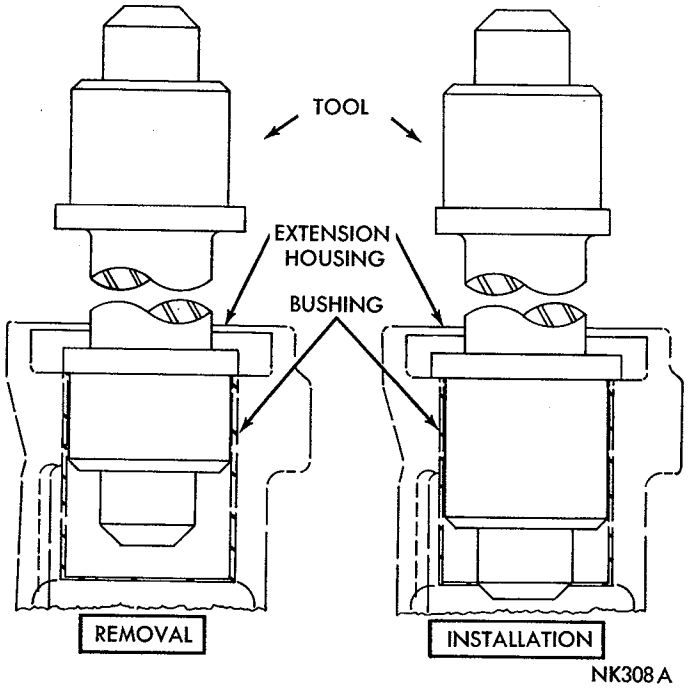


*Fig. 27—Replacing Extension Housing Bushing*

(7) Install the speedometer pinion and adapter assembly. Refer to Page 3.

(8) Install drain plug and back-up light switch and tighten securely.

(9) Refill transmission with Automatic Transmission Fluid AQ-ATF, Suffix "A." Install filler plug and tighten securely.

## TRANSMISSION INSTALLATION

Place a small amount of short fibre wheel bearing lubricant around inner end of pinion shaft pilot bushing in flywheel and on pinion bearing retainer release bearing sleeve area. **Do not lubricate end of the pinion shaft, clutch disc splines or clutch release levers.**

(1) Remove transmission from repair stand. Install rear crossmember and support on the transmission, then slide assembly under vehicle.

(2) Raise transmission, using a suitable jack, until drive pinion is centered in clutch housing bore.

(3) Roll transmission slowly forward until pinion shaft enters clutch disc. Turn pinion shaft until splines are aligned, then push transmission forward until seated against clutch housing. **Do not allow transmission to "hang" after pinion has entered the clutch disc.**

(4) Install transmission attaching bolts and tighten to 50 foot-pounds. Remove the jack.

(5) Using a pointed drift, align crossmember bolt holes, then install attaching bolts. Tighten to 35 foot-pounds.

(6) Remove engine support fixture and disengage hooks from the holes in frame side rails.

(7) Reconnect speedometer cable, gearshift rods and back-up light switch wires.

(8) Lubricate internal spline area of the front universal joint yoke, refer to "Lubrication and Maintenance," Group 0. Carefully guide front universal joint yoke into extension housing and on the mainshaft spline. Connect propeller shaft to the rear axle pinion shaft yoke.

(9) Road test vehicle, making sure transmission shifts smoothly and operates quietly.

(10) If shift linkage requires adjustment, refer to Page 2.

## STEERING COLUMN AND GEARSHIFT

### *Removal*

(1) Disconnect battery cable at the battery negative terminal.

(2) Disconnect shift linkage rods from the shift levers at bottom of the steering column.

(3) Remove steering shaft to wormshaft coupling roll pin.

**NOTE: On Fury models, remove clamp and heat shield from lower end of steering column. Disconnect steering shaft by removing roll pin from upper joint coupling.**

(4) Disconnect the turn signal, and horn wires.

(5) Depress horn ring or horn ring ornament and rotate ¼ turn counterclockwise to remove.

(6) Remove horn switch retaining screws.

(7) Disconnect horn wire clip and remove horn switch assembly.

(8) Remove steering wheel retaining nut and washer.

(9) Remove steering wheel, using remover Tool C-3428.

(10) Remove floor plate to toe board attaching screws.

(11) Disconnect steering column at instrument panel bracket by removing the retaining screws and clamp.

(12) Lift steering column assembly up and off end of the wormshaft, and remove assembly out through passenger compartment being careful not to soil or damage the headlining.

### *Disassembly*

Place steering column assembly on a clean padded bench to protect the paint finish.

(1) Remove turn signal lever retaining screw and remove the lever.

(2) Remove the three switch retaining screws (Fig. 28) and pull turn signal switch and switch plate up and out, feeding wires and connectors through the steering column jacket.

(3) Disengage column jacket lower seal from lip on the jacket, and slide seal down toward the coupling (not used on Fury Models).

(4) **Valiant and Belvedere Models:** Exert an upward force on steering shaft to force steering column

MyMopar.com

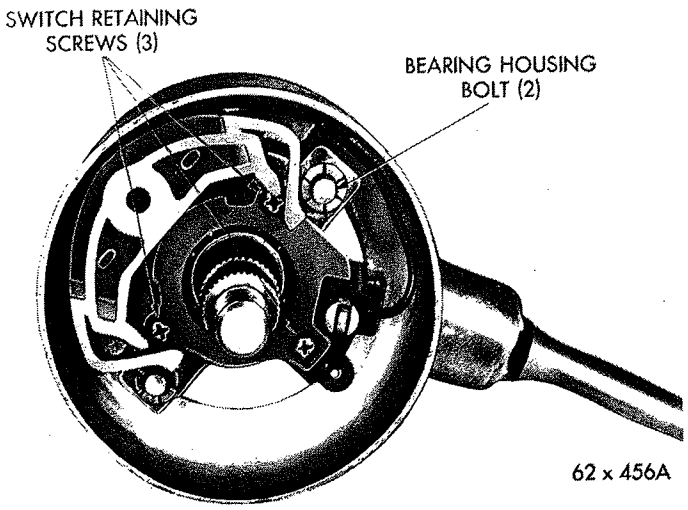


***Fig. 28—Steering Column—Upper End***

jacket upper bearing and insulator out of bore in the bearing housing. Remove insulator from the bearing. Remove snap ring from upper groove in steering shaft with Tool C-3128.

Using Tool C-3891, remove steering column upper bearing (Fig. 29). Remove lower snap ring and slide steering shaft and coupling downward out of the column jacket.

**Fury Models:** Install steering wheel nut on steering shaft, then bump steering shaft on a wood block to release bearings and shaft from the column jacket. Slide steering shaft out of column jacket and remove lower snap ring.

(5) Remove column jacket lower seal from the steering shaft (not used on Fury models).

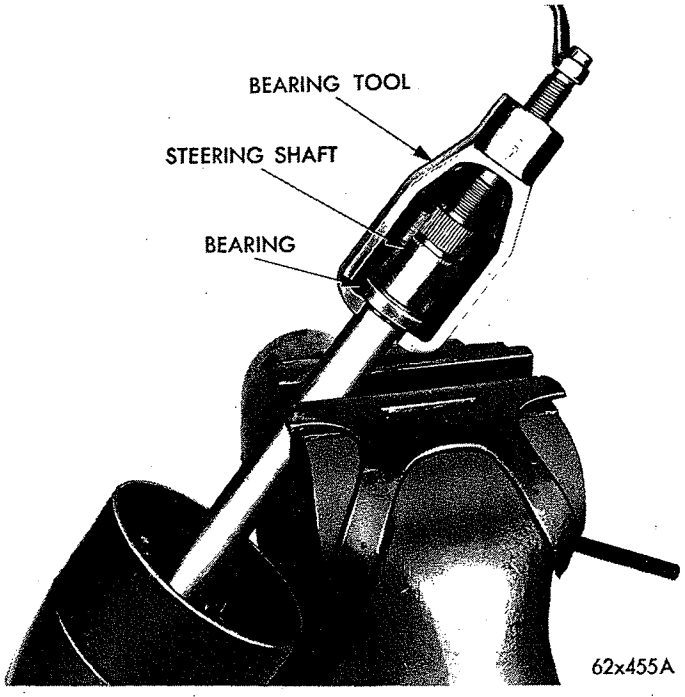


***Fig. 29—Removing Steering Shaft Bearing***

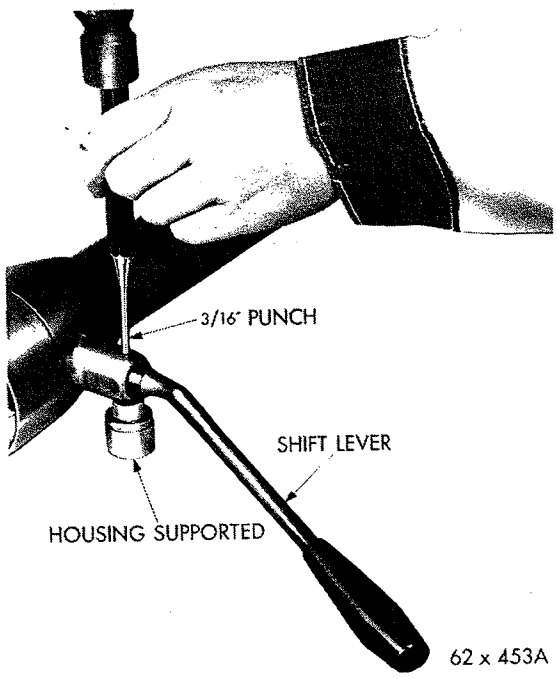


***Fig. 30—Removing Shift Lever Pivot Pin***

(6) While supporting gearshaft housing in area around shift lever pivot pin, drive out pivot pin, using a 3/16″ punch, and remove the shift lever (Fig. 30).

(7) Remove three lower support cup to jacket attaching screws (Fig. 31) and remove the cup.

(8) Remove nylon thrust washer, low and reverse lever, and the spacer.

(9) Remove two lower shift tube bushing retaining screws at slotted holes in the jacket.

(10) Slide shift tube with 2nd and direct lever, nylon bushing, spring and spring retainer out of the jacket (Fig. 32).

**NOTE: The shift tube with 2nd and direct lever spring, retainer and nylon bushing are serviced as an assembly, and are not to be disassembled.**

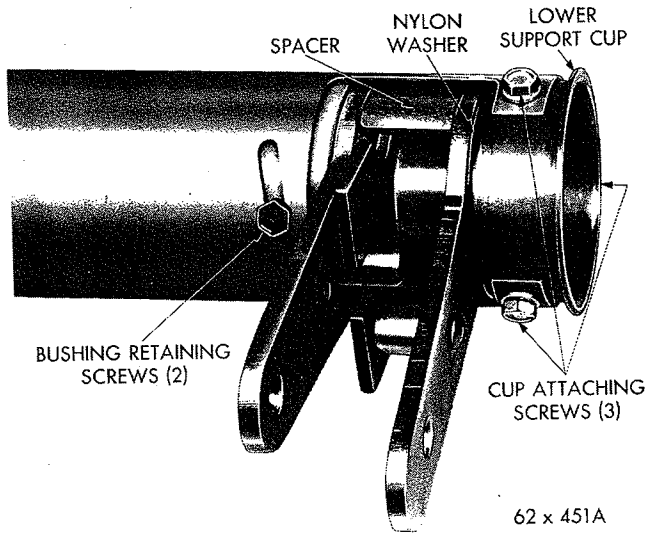


***Fig. 31—Steering Column—Lower End***

MyMopar.com

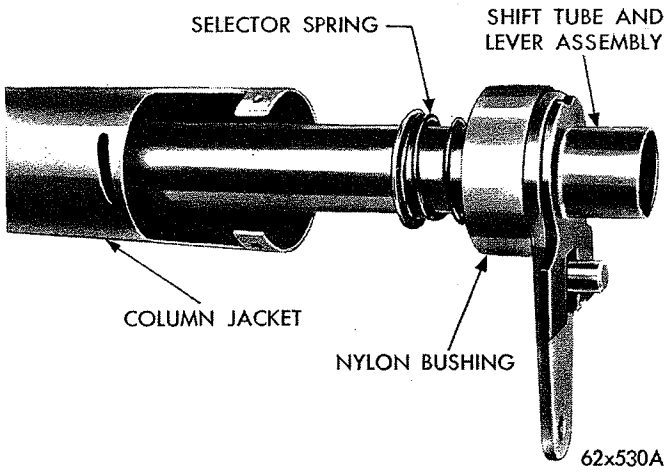


*Fig. 32—Removing Shift Tube Assembly*

(11) Remove floor plate assembly from the column jacket.

(12) Remove hexagon nuts from the two bearing housing retaining bolts, and lift steering column upper bearing housing off the jacket (Fig. 33).

(13) Lift gearshift housing and spring washer off the steering column jacket.

### Inspection

After cleaning, inspect all parts for wear or damage. Note condition of pins in two lower shift levers, shift lever socket at top end of shift tube, and inner end of shift lever.

Inspect steering shaft upper bearing for smooth operation, and lubricate with Multi-Purpose Chassis Lubricant or similar lubricant. If bearing has any signs of roughness or wear, it should be replaced. Replacement bearings are pre-lubricated.

### Assembly

(1) Position spring washer on the ledge in top end of steering column jacket (Fig. 33), and place shift lever housing in position at top of the column jacket.

(2) Place two bearing housing retaining bolts in position in the housing, and just start retaining nuts.

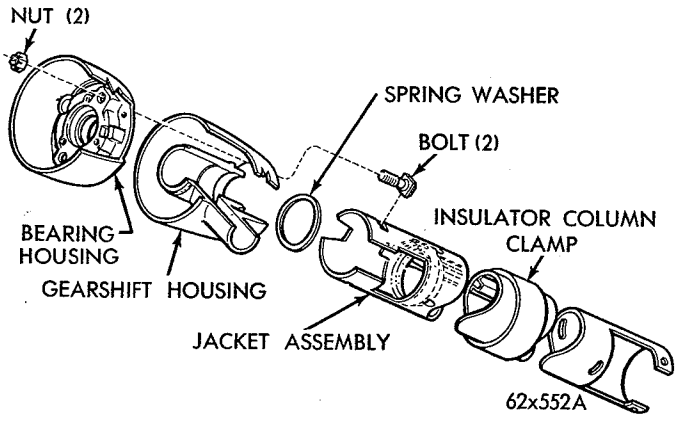


*Fig. 33—Jacket Tube—Disassembled*

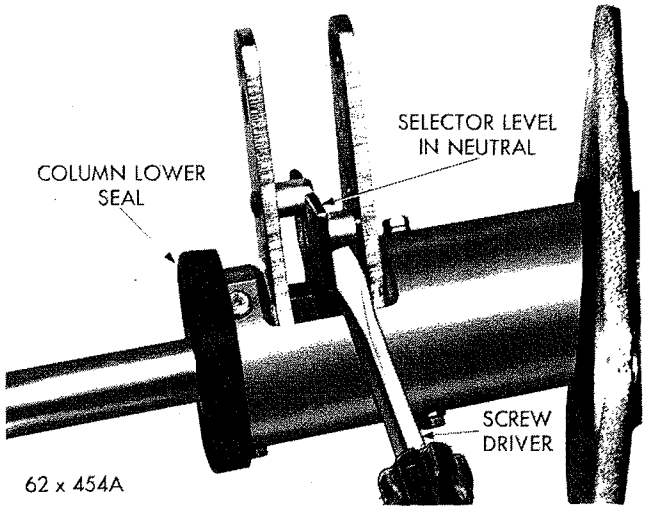


*Fig. 34—Holding Selector Lever in Neutral Position*

(3) Stand column upright, and lower the bearing housing into position, engaging bolt heads in slots in the column jacket.

(4) Tighten two retainer bolt nuts alternately and evenly in steps to prevent unseating bolt heads from the slots. Tighten to 50 inch-pounds.

(5) Lubricate floor plate 0-ring with a soap solution or rubber lubricant and slide assembly on the steering column.

The floor plate assembly must be installed before installing shift tube and levers, since this cannot be done after shift tube and levers are in place in the steering column.

(6) Turn nylon bushing on the shift tube (Fig. 32), so the two holes in bushing are aligned with centerline of 2nd and 3rd speed shift lever, then slide shift tube and lever assembly through jacket tube and into the bearing housing.

(7) Install spacer (Fig. 31), around selector lever so it rests against the 2nd and 3rd speed shift lever.

(8) Install low and reverse lever. Then install the nylon washer, centering it over end of the shift tube.

(9) Install lower support cup in the jacket (Fig. 31), while holding pressure against cup to overcome selec-

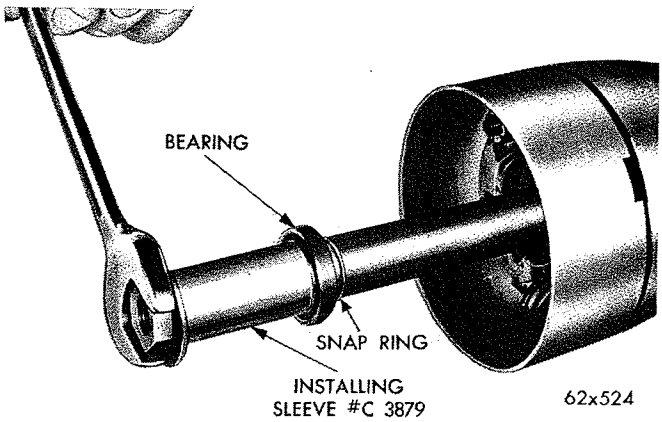


*Fig. 35—Installing Steering Column Upper Bearing*

MyMopar.com

tor spring load, start the three support cup retaining screws, and tighten to 30 inch-pounds.

(10) Loosely enter lower bushing retaining screws through slots in the jacket, and into the nylon bushings (Fig. 31).

(11) Rotate nylon bushing to where all play at shift levers and spacers is eliminated, but no binding occurs. With bushing in this position, tighten the two bushing to jacket screws to 30 inch-pounds.

(12) The gearshift lever insulator should be examined, and if any wear or damage is evident, it should be pulled off the lever and replaced.

(13) Place a screw driver blade between 2nd and 3rd speed shift lever and selector lever, so it will hold selector lever at neutral position half way between the two shift levers (Fig. 34).

(14) Position gearshift lever in shift lever housing so it engages hole in shift tube plate with the pin hole aligned.

(15) Support jacket tube housing in area around pin hole (Fig. 30) and drive pivot pin in flush with the housing.

(16) Before installing column lower seal (Fig. 34), fill cavity in the inside diameter of the seal between the two moulded-in seal bushings with short fiber wheel bearing lubricant. (Not used on Fury Models.)

Slide seal onto steering shaft, and down against coupling, with lip at outside diameter facing upward, so seal can be positioned on lower end of the column jacket during assembly.

(17) Place insulator over upper column bearing and into bore in the bearing housing. Use a soap solution or rubber lubricant to ease installation.

(18) Install snap ring in lower groove on steering shaft and slide shaft upward into column and through the upper bearing.

**Fury Models:** Lubricate steering shaft lower bearing to ease installation.

(19) Position wavy upper snap ring against top of the bearing. Place bearing installing sleeve Tool C-3879 and steering wheel retaining washer and nut, on top of steering shaft in that order (Fig. 35).

(20) Turn steering wheel retaining nut to exert pressure on installing sleeve, upper snap ring, and bearing, pressing bearing down onto knurled section of steering shaft and against the lower snap ring.

Exert sufficient pressure against upper snap ring to flatten it against bearing so it can enter groove in the steering shaft. Be sure snap ring is firmly seated in the groove.

(21) Position turn signal switch assembly in bearing housing, while feeding wiring through steering column and out through opening provided in the column jacket.

(22) Place switch plate over switch, and install three retaining screws (Fig. 28). Tighten screws to 24 inch-pounds.

(23) Position turn signal lever in the assembly, sighting down through hole in switch to align screw hole, and install the lever attaching screw. Tighten screws to 24 inch-pounds.

### Installation

(1) Insert column and jacket tube assembly through floor pan opening, being careful not to soil or damage the headlining.

(2) With front wheels in straight ahead position, align master splines of coupling and worm shaft (or steering shaft with upper joint coupling—Fury models). Engage coupling or steering shaft far enough to install a **new** roll pin.

(3) Loosely fasten steering column jacket to instrument panel bracket with clamp and the two attaching screws. Be sure tab on clamp is entered in locating slot in the column jacket.

**NOTE: The column jacket clamp must be installed with tab edge up on Belvedere and Fury Models and tab edge down on Valiant Models.**

(4) The steering shaft coupling must be centered at midpoint of its travel.

**Valiant and Belvedere Models:** Move column assembly up or down in instrument panel bracket so dimension between top of coupling and center of the gauge hole (Fig. 36) is 13/16 inch. Tighten the steering column bracket clamp screws to 95 inch-pounds.

**Fury Models:** Move column assembly up or down in instrument panel bracket so dimension between top of coupling and center of the gauge hole (Fig. 37) is 13/16 inch. Tighten the steering column bracket clamp screws to 95 inch-pounds.

(5) Slide floor plate down column and into position on the floor. Install retaining bolts finger tight so plate can be shifted to align lower end of column.

(6) **Valiant and Belvedere Models:** Inspect lower end of column jacket and shift tube for being concentric with the steering shaft. If not, shift floor plate

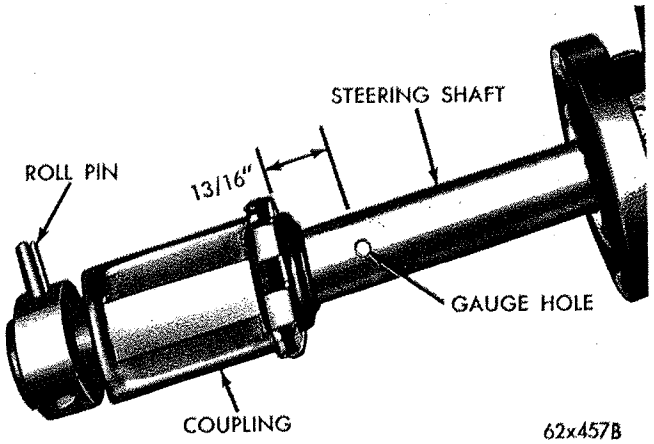


*Fig. 36—Positioning Steering Shaft Coupling (Valiant and Belvedere Models)*

MyMopar.com

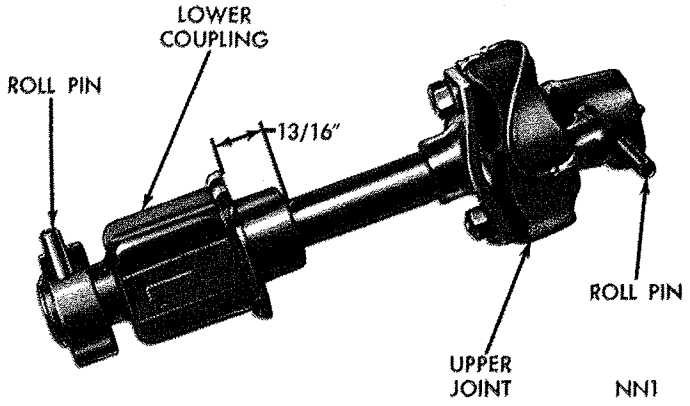


***Fig. 37—Positioning Steering Shaft Coupling (Fury Models)***

to a position where it holds column jacket and shift tube concentric with steering shaft. Tighten all floor plate retaining screws to 90 inch-pounds. After tightening screws, recheck alignment.

Slide lower seal up to bottom end of column and snap seal lip over flanged lower end of column jacket (Fig. 34).

**Fury Models:** Shift floor plate to position lower end of column to obtain minimum steering shaft coupling angles. Tighten all floor plate retaining screws to 90 inch-pounds. After tightening screws, recheck alignment.

Install heat shield on lower end of steering column and secure with the clamp screws. Make sure shield clears the rubber coupling.

(7) With master splines in steering wheel hub and steering shaft aligned, place steering wheel on the steering shaft.

(8) Install steering wheel retaining washer and nut. Tighten nut to 24 foot-pounds.

(9) Install horn switch parts previously removed from steering wheel. Install the horn ring or horn ring ornament.

# MANUAL TRANSMISSION—A-833

## INDEX


| | Page |
|---|---|
| Cleaning and Inspection | 25 |
| General Information | 17 |
| Service Diagnosis | 18 |
| Service In Vehicle | 18 |
| Extension Housing Yoke Seal | 19 |
| Gearshift Linkage Adjustment | 18 |
| Speedometer Pinion | 18 |
| Service Out of Vehicle | 19 |
| Assembling the Transmission | 26 |
| Disassembling the Transmission | 20 |
| Transmission Installation | 28 |
| Transmission Removal | 19 |
| Specifications | 97 |
| Tightening Reference | 99 |


## GENERAL INFORMATION

The A-833 four speed transmission (Fig. 1) is available for all vehicles using manual transmissions except those equipped with 170, 225 and 318 cubic inch engines.

The main drive pinion is supported by a heavy duty ball bearing at the rear, and an Oilite bushing pressed into the end of the crankshaft.

The mainshaft front end is pivoted in roller bearings in the end of the main drive pinion, and is supported by a ball bearing in the front end of the extension housing. The rear end of the mainshaft is supported by the sliding yoke and bushing in the extension housing.

The countershaft gear is supported by a double row of needle type roller bearings at each end and the thrust is taken on thrustwashers between the ends of the gear and the transmission case. The alignment of the needle type roller bearing within the gear are maintained by four thrust washers (one being used between the rows of roller bearings and one at each end).

The reverse idler gear is supported on a bronze

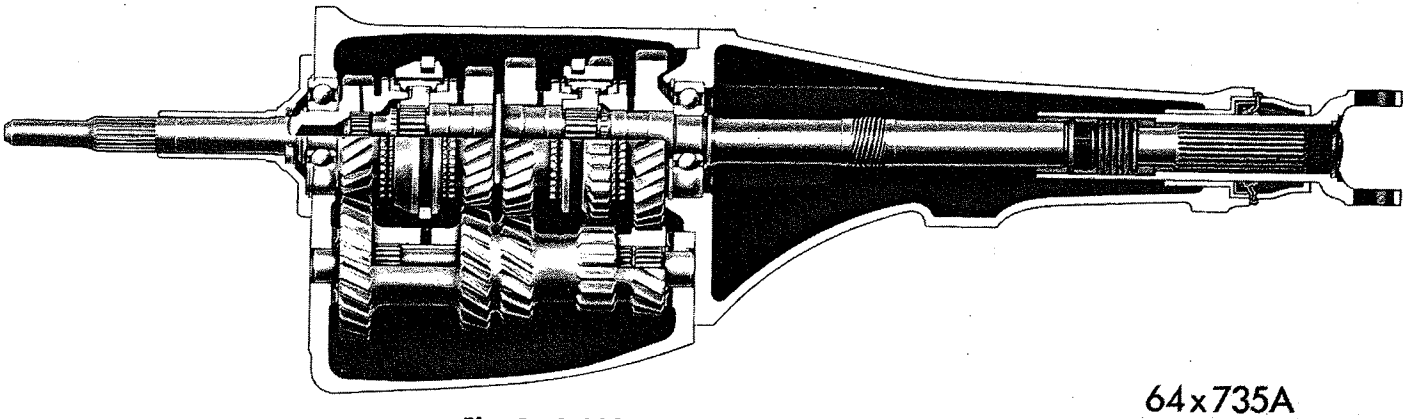


***Fig. 1—A-833 Four Speed Transmission***

MyMopar.com

bushing, pressed into the gear.

The gearshifting is manually operated through shift control rods to the transmission. Any forward gear may be engaged while the vehicle is in motion through the use of synchronizing clutches.

The transmission may be used as an aid to deceleration by downshifting in sequence without double clutching or gear clashing, due to the fact that all forward speeds are synchronized. **(The reverse speed-gear is not synchronized.)** The service procedures covering the four speed transmission used on all vehicles so equipped is identical to the following service procedures except where noted.

**IMPORTANT: All transmissions have the sliding spline type output shaft. Whenever the propeller shaft front sliding yoke is removed from the transmission, it should be cleaned and relubricated as outlined in Group "0" of this Manual.**

## SERVICE DIAGNOSIS

| Condition | Possible Cause | Correction |
|---|---|---|
| **HARD SHIFTING** | (a) Incorrect clutch adjustment. | (a) Refer to the Clutch Group for corrections. |
| | (b) Improper cross-over adjustment. | (b) Perform the cross-over adjustment as outlined in "Gearshift Linkage Adjustments." |
| | (c) Synchronizer clutch sleeve damaged. | (c-d-e) Causes noted can only be corrected by disassembling the transmission and replacing damaged or worn parts. |
| | (d) Synchronizer spring improperly installed. | |
| | (e) Broken or worn synchronizer stop rings. | |
| | (f) Gearshift housing misaligned. | (f) Align gearshift housing. Refer to Page 28. |
| **TRANSMISSION SLIPS OUT OF GEAR** | (a) Linkage interference. | (a) Inspect and remove all linkage interferences. |
| | (b) Gearshift rods out of adjustment. | (b) Adjust the gearshift rods as outlined in "Gearshift Linkage Adjustments." |
| | (c) Second or direct speed gear synchronizer clutch teeth worn. | (c) Disassemble the transmission and replace parts as necessary. |
| | (d) Clutch housing bore or face out of alignment. | (d) Refer to the Clutch Group for correction procedures. |
| **TRANSMISSION NOISES** | (a) Excessive end play in the countershaft gear. | (a) Replace the thrust washers. |
| | (b) Loose synchronizer hub spline fit on mainshaft. | (b) Inspect the mainshaft and synchronizer hub and replace parts as necessary. |
| | (c) Damaged, broken or excessively worn gear teeth. | (c) Replace the worn gears. |
| | (d) Drive pinion bearing worn. | (d) Replace the worn bearing. |

## SERVICE PROCEDURES

### SERVICE IN VEHICLE

### GEARSHIFT LINKAGE ADJUSTMENT

Fabricate a lever alignment tool from 1/16 inch thick metal to dimensions shown in Figure 2.

(1) Shift transmission into neutral, then disconnect all control rods from the transmission levers.

(2) Insert lever alignment tool through the slots in levers, making sure its through all levers and against the back plate. (This holds the three levers in neutral position.)

(3) With all transmission levers in neutral position, adjust length of control rods so they enter the transmission levers freely without any rearward or forward movement.

(4) Install control rod flat washers and retaining clips. Remove the alignment tool.

(5) Check linkage for ease of shifting into all gears and for crossover smoothness.

### SPEEDOMETER PINION

#### *Removal and Installation*

Rear axle gear ratio and tire size determines pinion gear size requirements. Refer to "Speedometer Pinion Chart" for pinion usage.

(1) Remove bolt and retainer securing speedometer pinion adapter to the extension housing (Fig. 3).

(2) With cable housing connected, carefully work adapter and pinion out of the extension housing.

(3) If transmission fluid is found in cable housing

MyMopar.com

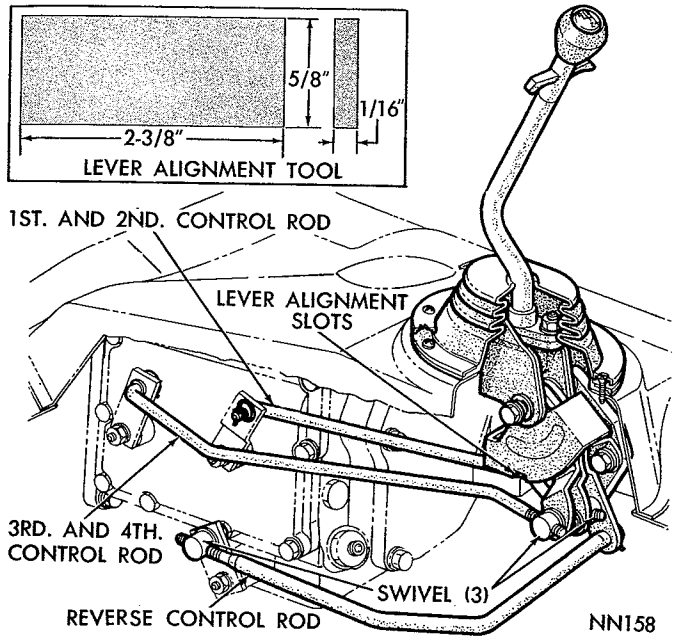


***Fig. 2—Gearshift Linkage Adjustment***

replace seal in the adapter (Fig. 4).

(4) Select pinion range numbers on outside of adapter to correspond with number of pinion teeth.

(5) Install adapter in pinion housing with pinion range numbers aligned with 6 o'clock position (Fig. 3).

(6) Install retainer and bolt, with retainer tangs in adapter positioning slots. Tap adapter firmly into extension housing and tighten retainer bolt to 100 inch-pounds.

## EXTENSION HOUSING YOKE SEAL

### *Replacement*

(1) Disconnect propeller shaft at rear universal joint. Carefully pull shaft yoke out of the transmission extension housing.

**CAUTION: Be careful not to scratch or nick ground surface on sliding spline yoke during removal and installation of the shaft assembly.**

(2) Remove the extension housing yoke seal (Fig. 5) with Tool C-3994 or C-3985.

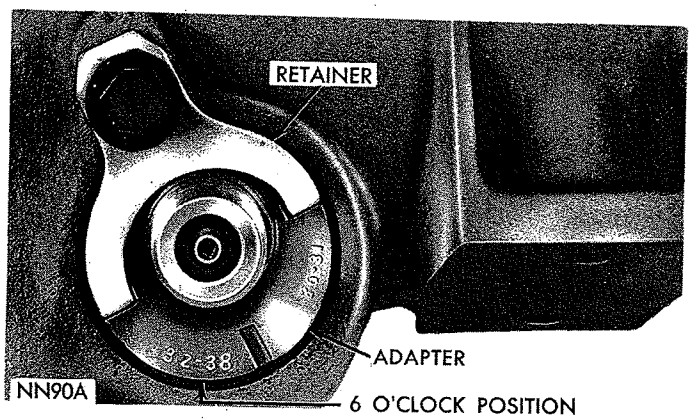


***Fig. 3—Speedometer Pinion and Adapter—Installed***

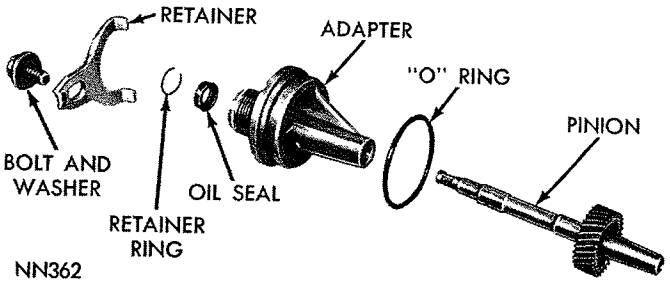


***Fig. 4—Speedometer Drive—Disassembled***

(3) To install a new seal, position seal in opening of extension housing and drive it into housing with Tool C-3995 or C-3972 (Fig. 6).

(4) Carefully guide front universal joint yoke into extension housing and on the mainshaft splines. Connect propeller shaft to rear axle pinion shaft yoke.

## SERVICE OUT OF VEHICLE

## TRANSMISSION REMOVAL

(1) Raise vehicle on a hoist and drain lubricant from the transmission.

(2) Disconnect all shift control rods from the transmission levers. Remove three bolts securing shift unit to the extension housing.

(3) Disconnect propeller shaft at rear universal joint. Carefully pull shaft yoke out of the transmission extension housing.

**CAUTION: Be careful not to scratch or nick ground surface on sliding spline yoke during removal and installation of the shaft assembly.**

(4) Disconnect speedometer cable and back-up light switch leads.

(5) Disconnect left hand exhaust pipe (dual exhaust) from the manifold. Disconnect parking brake cable.

(6) Install engine support fixture C-3487, engaging the hooks in holes in the frame side member. Be sure support ends are up against underside of oil pan flange.

(7) Raise engine slightly with the support fixture. Disconnect extension housing from the removable

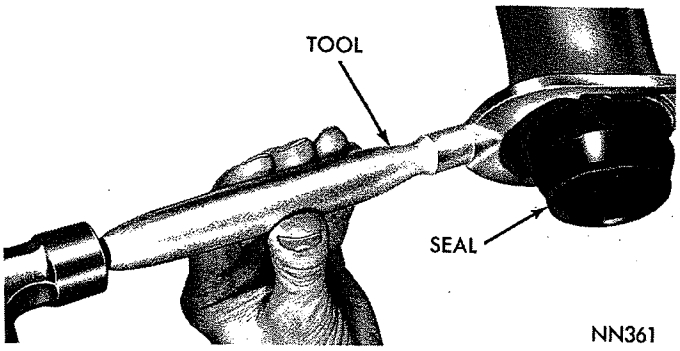


***Fig. 5—Removing Extension Housing Yoke Seal***

MyMopar.com

## SPEEDOMETER PINION CHART
## A-833—4 SPEED
## OUTPUT SHAFT DRIVE GEAR—13 TEETH

| Tire Size | Axle Ratios Number of Pinion Gear Teeth and Color | | | |
|---|---|---|---|---|
| | 2.93:1 | 3.23:1 | 3.55:1 | 3.91:1 |
| 6.50-13 | 32—Black | 35—Orange | 38—Blue | 42—White |
| 7.00-13 | 31—Green | 34—Green | 38—Blue | 41—Red |
| 6.95-14 | 31—Green | 34—Green | 37—White | |
| 7.35-14 | 30—Yellow | 33—Yellow | 36—Red | 40—Orange |
| 7.75-14 | 29—Black | 32—Black | 35—Orange | 39—Green |
| 8.25-14 | 29—Black | 32—Black | 35—Orange | 38—Blue |
| 8.55-14 | 28—Blue | 31—Green | 34—Green | 37—White |
| 7.75-15 | 29—Black | 32—Black | 35—Orange | 39—Green |
| 8.15-15 | 29—Black | 32—Black | 35—Orange | 38—Blue |
| 8.45-15 | 28—Blue | 31—Green | 34—Green | 37—White |

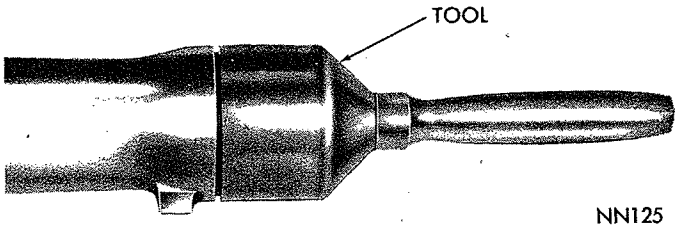


*Fig. 6—Installing Extension Housing Yoke Seal*

center crossmember.

(8) Support transmission with a suitable jack and remove center crossmember. Remove transmission to clutch housing bolts.

(9) Slide transmission toward rear until drive pinion shaft clears clutch disc, before lowering the transmission.

(10) Lower transmission and remove from under vehicle. Thoroughly clean exterior of unit, preferably by steam. Mount transmission in repair stand DD-1014 (Fig. 7).

## DISASSEMBLING THE TRANSMISSION

To disassemble transmission for repair or overhaul, refer to Figs. 7 and 8. Remove the back-up light switch.

### *Gearshift Housing and Mechanism*

(1) Remove bolts that attach gearshift housing to the transmission case (Fig. 9). With all levers in neutral detent position, pull the housing out and away from the case. (The first and second, third and fourth shift fork may remain in engagement with the syn-

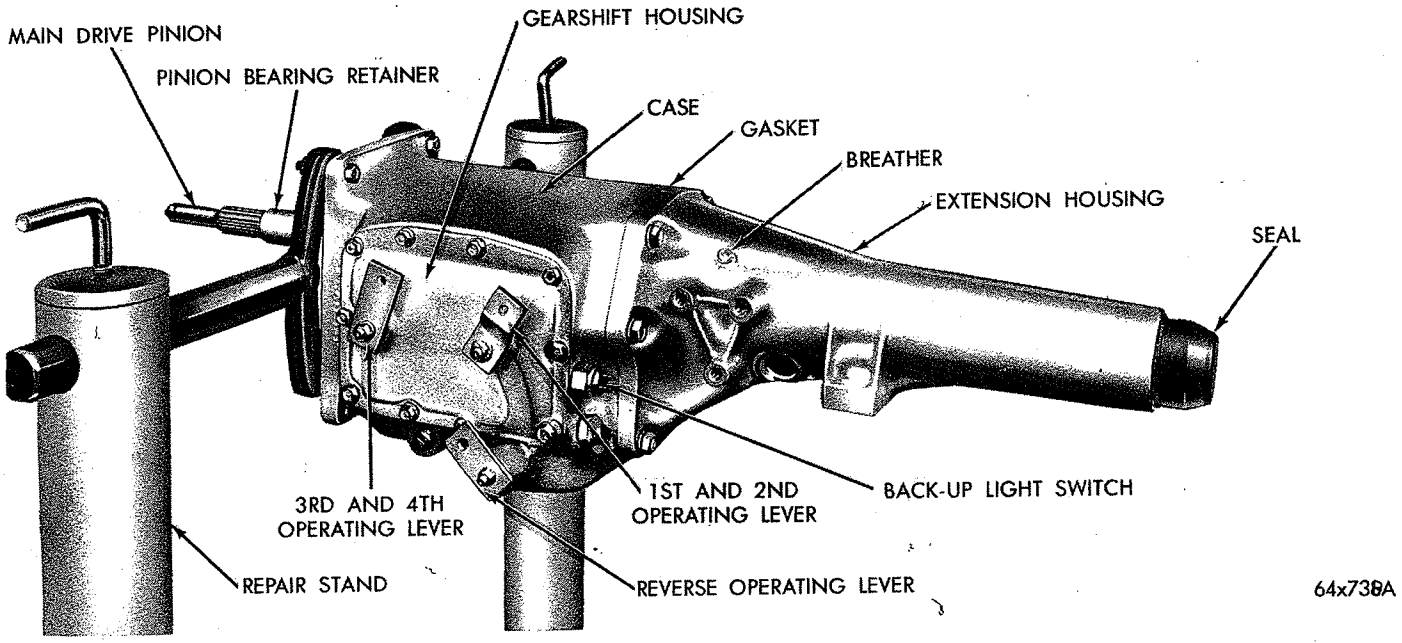


*Fig. 7—A-833 Transmission in Repair Stand*

MyMopar.com

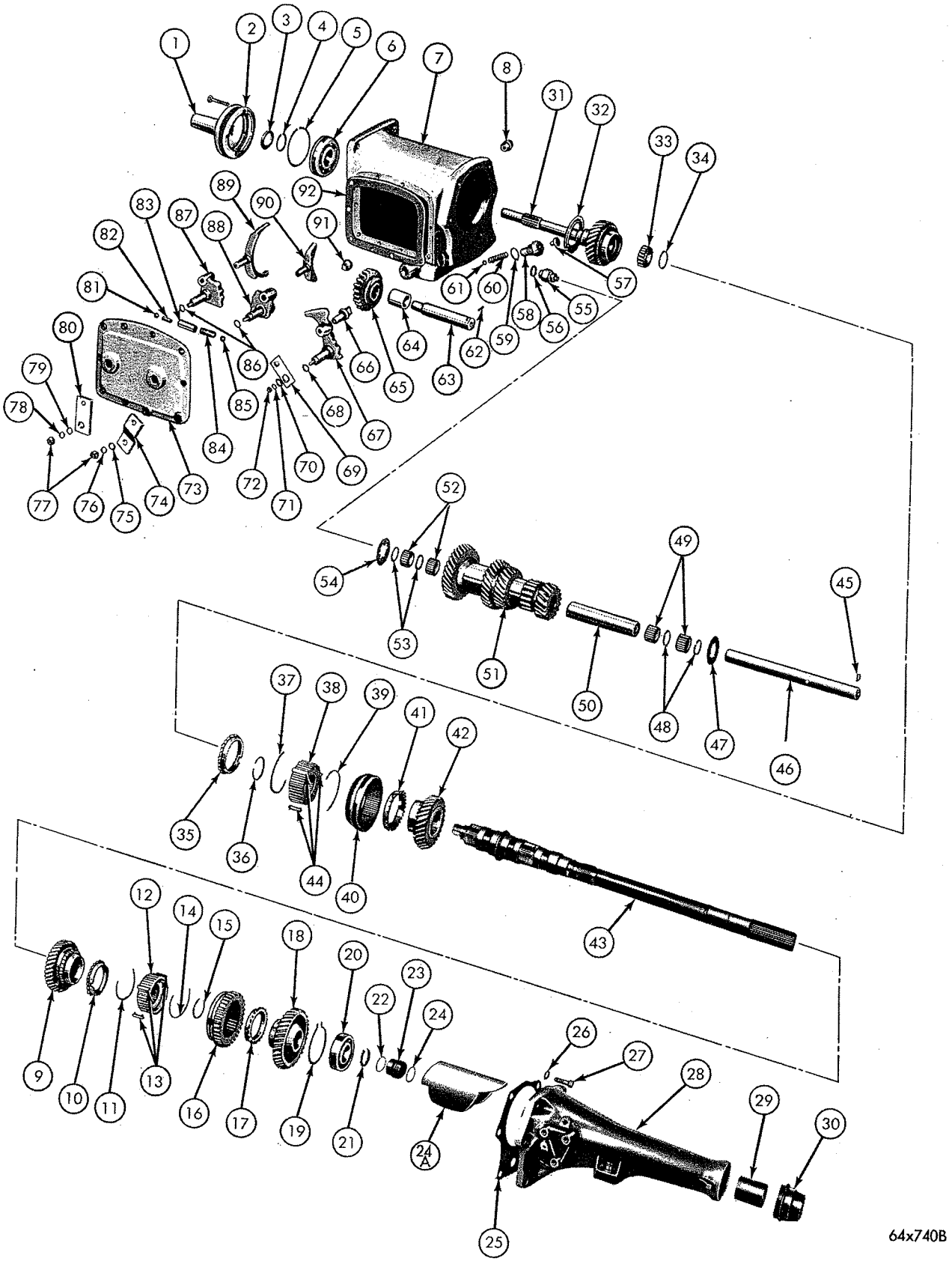


*Fig. 8—A-833 Transmission—Disassembled*

MyMopar.com

1. Bearing Retainer
2. Bearing Retainer Gasket
3. Bearing Retainer Oil Seal
4. Snap Ring, Bearing (Inner)
5. Snap Ring, Bearing (Outer)
6. Pinion Bearing
7. Transmission Case
8. Filler Plug
9. Gear, 2nd Speed
10. Stop Ring
11. Shift Plate Springs
12. Clutch Gear
13. Shift Plates (3)
14. Shift Plate Spring
15. Snap Ring
16. 1st and 2nd Clutch Sleeve Gear
17. Stop Ring
18. 1st Speed Gear
19. Bearing Retainer Ring
20. Rear Bearing
21. Snap Ring
22. Front Stop Ring
23. Yoke Seal
24. Rear Stop Ring
24A. Baffle
25. Gasket, Case to Extension Housing
26. Lockwasher
27. Bolt
28. Extension Housing
29. Mainshaft Yoke Bushing
30. Oil Seal
31. Main Drive Pinion
32. Oil Slinger
33. Needle Bearing Rollers
34. Snap Ring
35. Stop Ring
36. Snap Ring
37. Shift Plate Spring
38. Clutch Gear
39. Shift Plate Spring
40. Clutch Sleeve
41. Stop Ring
42. 3rd Speed Gear
43. Mainshaft (Output)
44. Shift Plates (3)
45. Woodruff Key
46. Countershaft
47. Thrustwasher, Gear (1)
48. Thrustwasher, Needle Roller Bearing
49. Needle Bearing Rollers
50. Bearing Spacer
51. Countershaft Gear (Cluster)
52. Needle Bearing Rollers
53. Thrustwasher, Needle Roller Bearing
54. Thrustwasher, Gear (1)
55. Backup Light Switch
56. Backup Light Switch Gasket
57. Plug
58. Retainer, Reverse Detent Ball Spring
59. Gasket
60. Spring, Reverse Detent Ball
61. Ball, Reverse Detent
62. Woodruff Key
63. Reverse Slider Gear Shaft
64. Bushing, Reverse Slider Gear
65. Gear, Reverse Slider
66. Fork, Reverse Shifter
67. Reverse Lever
68. Oil Seal, Reverse Lever Shaft
69. Reverse Operating Lever
70. Flatwasher
71. Lockwasher
72. Nut
73. Gearshift Control Housing
74. 1st and 2nd Operating Lever
75. Flatwasher
76. Lockwasher, Lever
77. Nut, Lever
78. Lockwasher, Lever
79. Flatwasher, Lever
80. 3rd and 4th Operating Lever
81. Detent Ball
82. Detent Ball Pin
83. Detent Ball Sleeve
84. Detent Ball Spring
85. Detent Ball
86. Oil Seal (2)
87. 3rd and 4th Lever
88. 1st and 2nd Lever
89. 3rd and 4th Speed Fork
90. 1st and 2nd Speed Fork
91. Drain Plug
92. Gasket, Shift Control Housing

chronizer sleeves.) Work forks out of the sleeves and remove from the case. **The following three steps need only be done, if oil leakage is visible around the gearshift lever shafts.**

(2) Remove nuts, lockwashers and flatwashers that attach first and second, third and fourth speed shift operating levers to the shafts. Disengage shift levers from flats on the shafts and remove.

**CAUTION: Make sure shafts are free of burrs before removal; otherwise the bores may be scored resulting in leakage after reassembly.**

(3) Carefully push gearshift lever shafts out of housing, allowing the detent balls to fall free.

(4) Slide gearshift interlock sleeve, interlock pin and spring out of the housing.

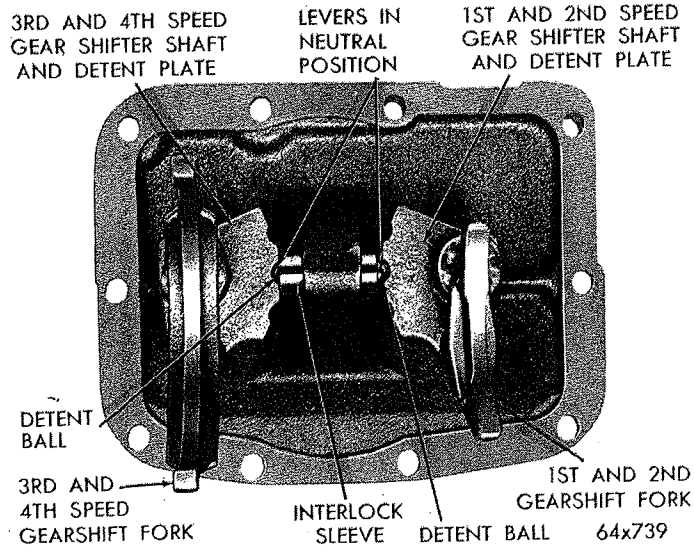


***Fig. 9—Shift Housing Assembly***

### *Extension Housing and Mainshaft*

(1) Remove bolt and retainer securing speedometer pinion adapter in the extension housing (Fig. 3). Carefully work adapter and pinion out of the extension housing.

(2) Remove bolts that attach extension housing to the transmission case.

(3) Slide third and fourth synchronizer sleeve slightly forward, then using a soft hammer, tap on extension housing (in a rearward direction). Slide housing and mainshaft assembly out and away from the case (Fig. 10).

(4) Refer to Fig. 11 for location of various gears, synchronizer sleeves and clutches before disassembling the mainshaft.

(5) Using snap ring pliers, remove snap ring (Fig. 12), that retains 3rd and 4th synchronizer clutch gear

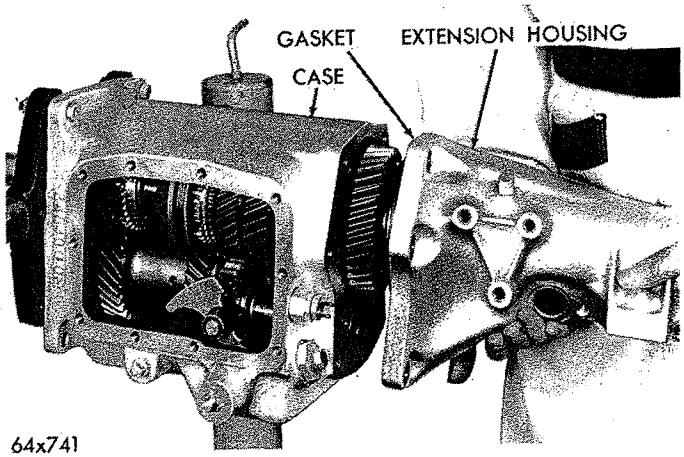


***Fig. 10—Removing or Installing Extension Housing and Mainshaft Assembly***

MyMopar.com

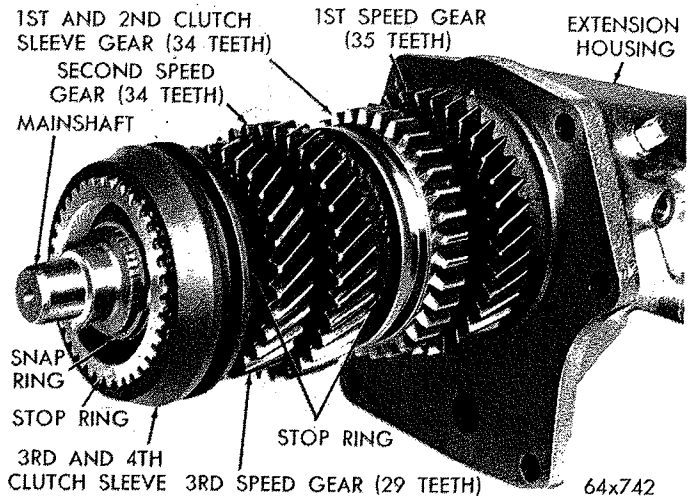


***Fig. 11—Mainshaft Gear Identification***

and sleeve, slide 3rd and 4th synchronizer assembly off end of the mainshaft.

(6) Slide 3rd speed gear and stop ring off the mainshaft. (Do not separate 3rd and 4th speed synchronizer clutch gear, sleeve, shift plates or springs unless inspection reveals a replacement part is required.)

(7) Using long nose pliers, compress snap ring that retains mainshaft rear bearing in the extension housing (Fig. 13).

(8) Holding snap ring compressed, pull mainshaft assembly and bearing out of the extension housing (Fig. 14).

(9) Unwind and slide yoke seal rear stop ring from the mainshaft (Fig. 15). Slide seal and front stop ring off the shaft.

(10) Remove snap ring that retains mainshaft bearing on the shaft (Fig. 16). Remove bearing from mainshaft by inserting steel plates on front side of 1st speed gear, then using an arbor or hammer, press or drive rear bearing off the mainshaft. (Be careful not to damage gear teeth.)

(11) Remove bearing, bearing retainer ring, 1st speed gear, and first speed stop ring from the shaft.

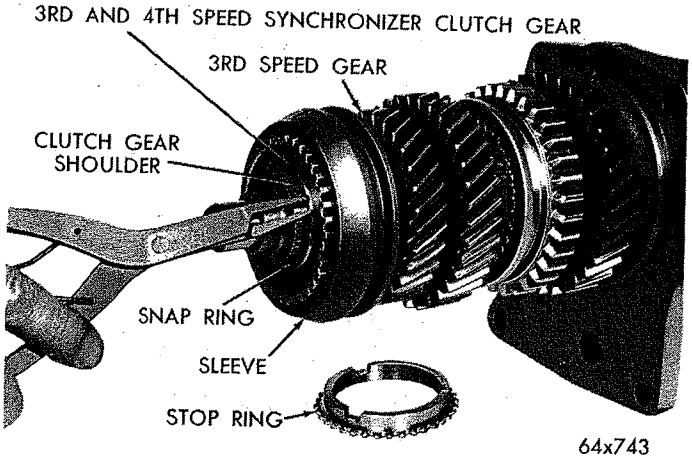


***Fig. 12—Disassembling Mainshaft***

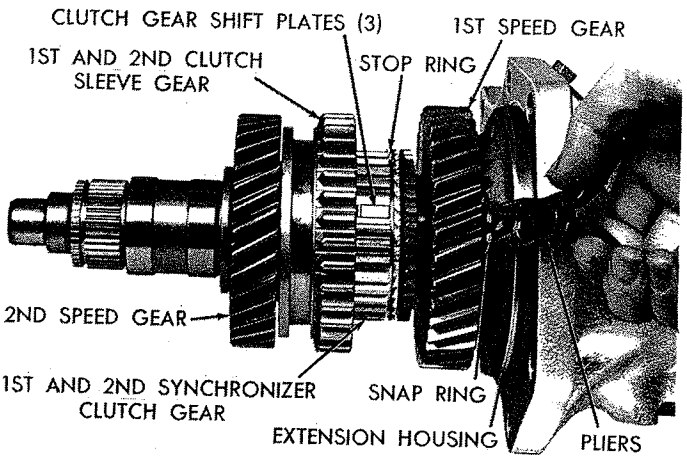


***Fig. 13—Removing or Installing Rear Bearing Snap Ring—Front***

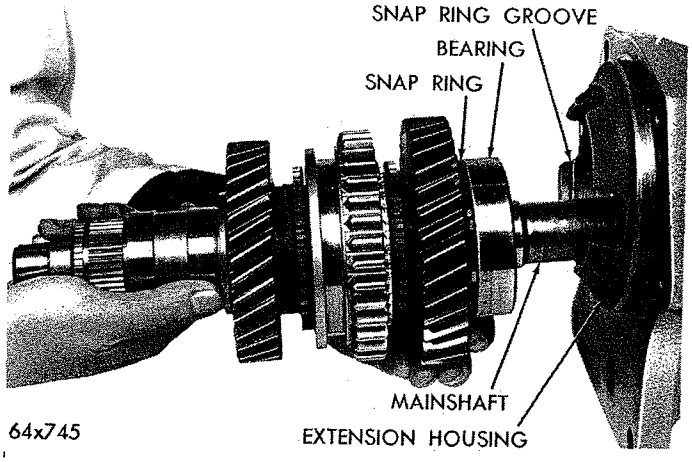


***Fig. 14—Removing or Installing Mainshaft***

(12) Again using snap ring pliers, remove snap ring that retains 1st and 2nd clutch sleeve gear and clutch to the mainshaft (Fig. 17). Slide 1st and 2nd clutch sleeve gear and clutch from the mainshaft. (Do not separate clutch sleeve gear and clutch, unless inspection reveals a replacement part is required.)

Figure 18 shows various mainshaft bearing surfaces of the gears. Inspect these surfaces for signs of wear, scoring, or any condition that would not allow the shaft to be used at reassembly.

(13) Using a feeler gauge, measure end play of the

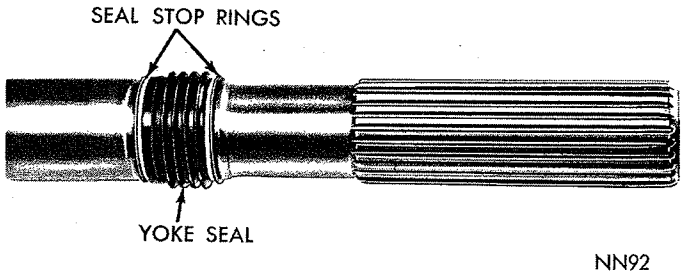


***Fig. 15—Sliding Spline Yoke Seal***

MyMopar.com

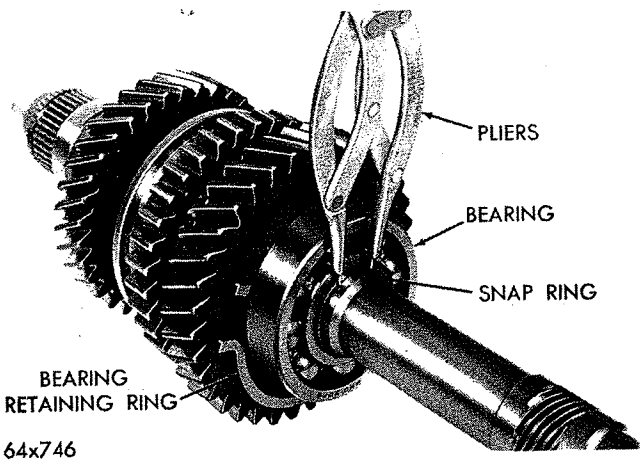


***Fig. 16—Removing or Installing Rear Bearing Snap Ring—Rear***

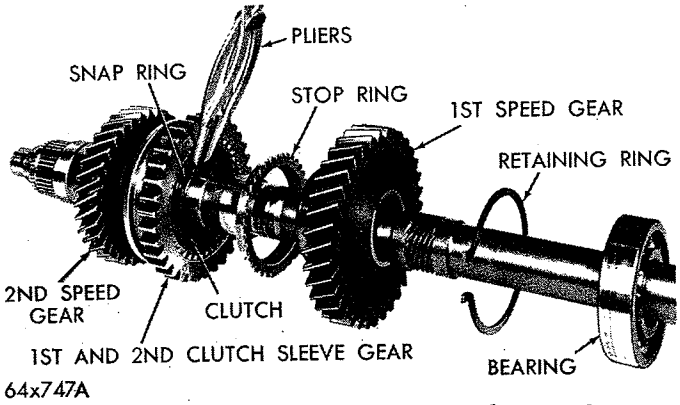


***Fig. 17—Removing or Installing Clutch Gear Snap Ring***

countershaft gear, by inserting gauge between thrust washer and the gear (Fig. 19). This measurement should not exceed .015 to .029 inch. If measurement is greater than that specified, new thrust washers must be installed at reassembly.

### Reverse Gear, Lever and Fork

Figure 20 shows reverse gear shift fork, reverse sliding gear, reverse sliding gear shaft and the countershaft gear.

(1) Remove reverse gearshift lever detent spring retainer, gasket, plug and detent ball spring from rear of the case (Fig. 20).

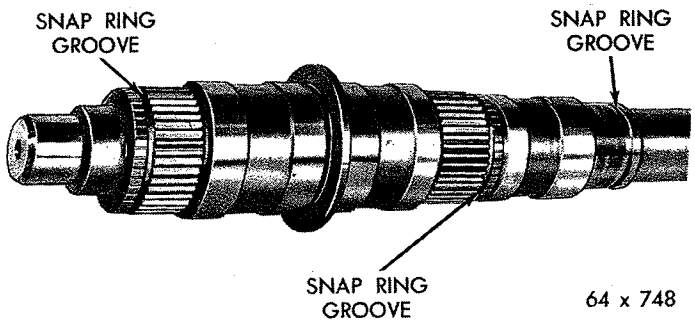


***Fig. 18—Mainshaft Bearing Surfaces***

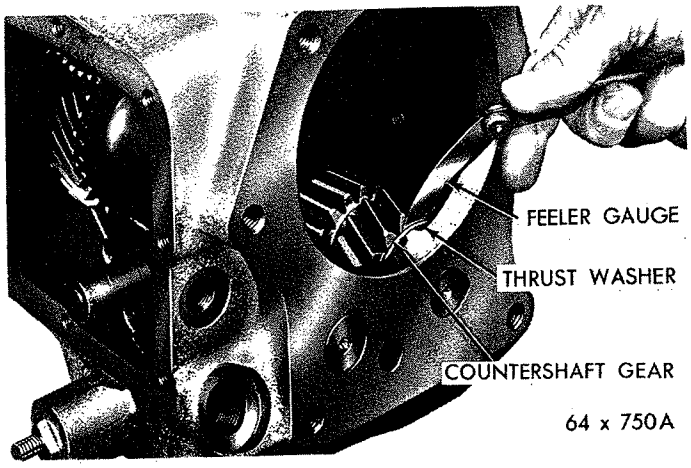


***Fig. 19—Measuring Countershaft Gear End Play***

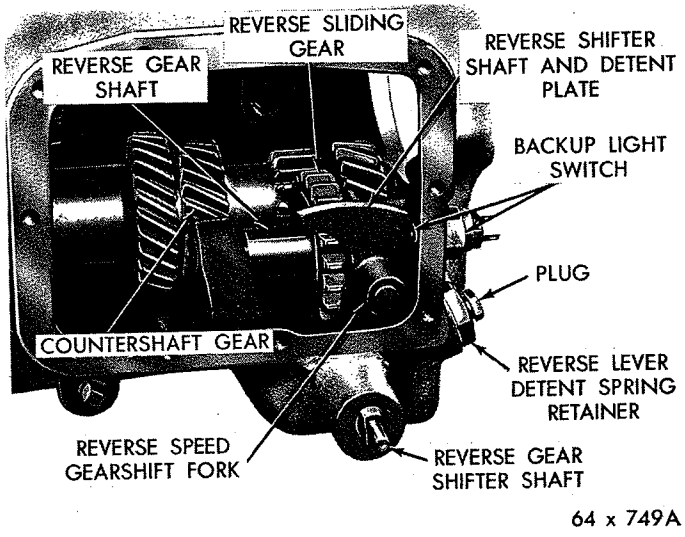


***Fig. 20—Gear, Shaft and Lever Identification***

(2) The reverse slider gear shaft is a very tight fit in the case (Fig. 21). To remove, place a 7/16 socket (¼ or ⅜ inch drive) on the end of C-3638 Power Steering "Worm Shaft Seal Remover" or C-3642 "Pump Shaft Seal Remover" (Fig. 22).

Place tool in the case with socket against end of

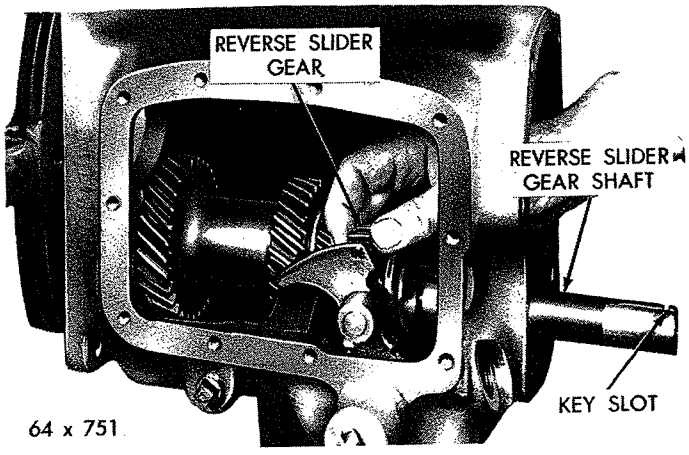


***Fig. 21—Removing or Installing Reverse Slider Gear***

MyMopar.com

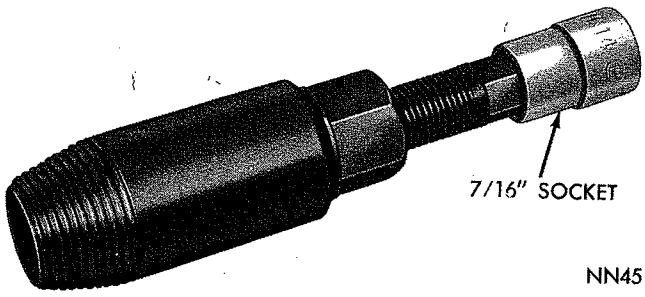


*Fig. 22—Reverse Slider Gear Shaft Remover Tool*

shaft and other end of tool against the case. Turn screw counterclockwise to press shaft out of the case. Remove woodruff key from the shaft. In some cases, a 7/16 deep socket and/or a 3″ extension may be required to press shaft completely out of the case.

**The following step need only be done if oil leakage is visible around the reverse gearshift lever shaft.**

(3) **Remove any burrs from shaft so as not to damage the case bore,** then carefully push reverse gearshift lever shaft inward and remove it from the case (Fig. 23). Lift out detent ball from bottom of the case. Remove shift fork from shaft and detent plate.

### Drive Pinion and Countershaft Gear

(1) Using countershaft arbor C-3938, and a plastic hammer, drive countershaft out of case, allowing countershaft gear to be lowered to bottom of the case. (This will permit removal of main drive pinion.)

(2) Remove drive pinion bearing retainer attaching bolts, then slide retainer and gasket from the pinion shaft. Remove pinion oil seal.

(3) Using snap ring pliers, remove pinion bearing outer snap ring, using a plastic hammer, drive pinion into the case and remove.

(4) Using snap ring pliers, remove pinion bearing inner snap ring. Using an arbor press, remove bearing from the pinion.

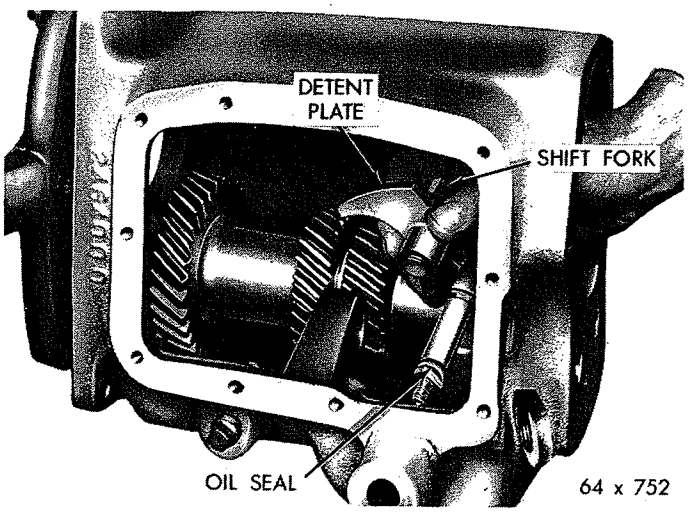


*Fig. 23—Removing or Installing Reverse Shift Fork and Lever*

(5) Remove snap ring and 16 bearing rollers from cavity in the drive pinion.

(6) Remove countershaft gear from bottom of the case (Fig. 24).

(7) Remove arbor and the 76 needle type bearings, thrust washers and spacer, from center of the countershaft gear.

## CLEANING AND INSPECTION

Clean transmission case thoroughly, using a suitable solvent, dry with compressed air. Inspect case for cracks, stripped threads in various bolt holes and machined mating surfaces for burrs, nicks or any condition that would render the case unfit for further service. The front mating surface should be smooth; if any burrs are present, dress them off with a fine mill file. If threads are stripped, install Helicoil inserts.

### Ball Bearings

Wash ball bearings, using a clean solvent and blow dry with compressed air.

**CAUTION: Do not spin bearings with air pressure; turn slowly by hand. Spinning unlubricated bearings may cause damage to the races and balls.**

Be sure ball bearings are clean, then lubricate them with light grade engine oil. Inspect bearings for roughness. This can best be determined by slowly turning outer race by hand. Measure fit of bearings on their respective shafts.

### Needle Type Bearing Rollers and Spacers

Inspect all bearing rollers for flat spots or brinelling. Inspect all bearing roller spacers for signs of wear or galling. Install new parts as required.

### Gears

Inspect gear teeth on synchronizer clutch gears and stop rings. If there is evidence of chipping or excessively worn teeth, install new parts at reassembly. Be sure clutch sleeve slides easily on the clutch gear. Inspect countershaft gear and all sliding gear teeth

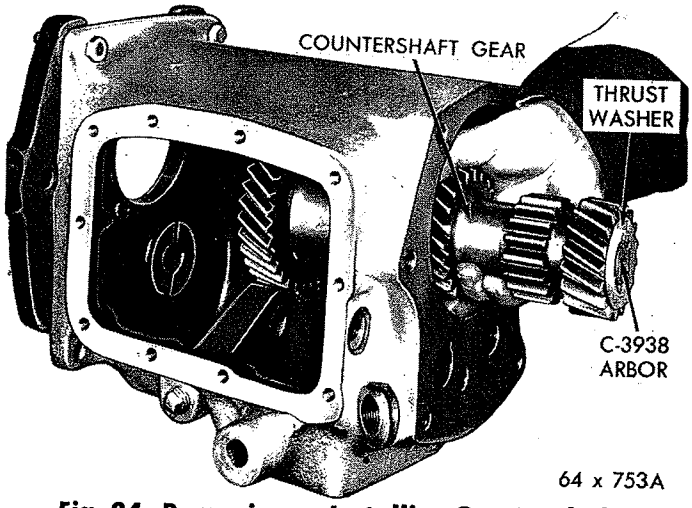


*Fig. 24—Removing or Installing Countershaft Gear and Arbor*

MyMopar.com

for chipped or broken teeth, or showing signs of excessive wear. Small nicks or burrs must be stoned off.

Inspect teeth on main drive pinion. If excessively worn, broken or chipped, a new pinion should be installed.

Test interlock sleeve and pin for free movement in bore of the shift housing. Examine detent balls for signs of brinelling. If lever detents show signs of excessive wear to extent of not locking in gear, install a new part. Inspect shift forks for wear on the shanks and pads.

### Synchronizer Stop Rings

Inspect stop rings for cracks at corners of the shift plate indexing slots. If rings are cracked or show signs of extreme wear on threaded bore, install new rings at reassembly.

**NOTE: If excessive gear clashing in 1st or 2nd was encountered, rough up synchronizer cones on gears with #120 emory cloth and replace synchronizer stop rings.**

### Mainshaft

Inspect mainshaft gear and bearing mating surfaces. If gear contact surfaces show signs of galling or are excessively worn, a new mainshaft should be installed.

Inspect snap ring grooves for burred edges. If rough or burred, remove condition using a fine file or crocus cloth. Inspect synchronizer clutch gear teeth on the shaft for burrs.

## ASSEMBLING THE TRANSMISSION

### Countershaft Gear and Drive Pinion

(1) Using heavy grease, coat inside bore of gear at each end, then install the roller bearing spacer. Insert arbor Tool C-3938, into gear and through the spacer. Center the spacer and arbor.

(2) Coat needle type roller bearings with heavy grease, then at each end of gear, install 19 rollers, followed by a spacer ring and 19 more roller bearings and 1 spacer ring (Fig. 8).

(3) If countershaft gear end play exceeded .028" when measured during disassembly of "Extension Housing and Mainshaft," Step 13, install new thrust washers. Coat thrustwashers with heavy grease and install them over arbor with tang side toward the case boss (Fig. 25).

(4) Install countershaft gear assembly into the case (Fig. 24). Allow gear assembly to rest on bottom of the case. (Be sure thrustwashers stay in position.)

(5) Press main drive pinion bearing on the pinion shaft. Be sure outer snap ring groove is toward the front (Fig. 26). Seat bearing fully against shoulder on the gear.

(6) Install a new inner snap ring to retain the bearing. Be sure snap ring is seated.

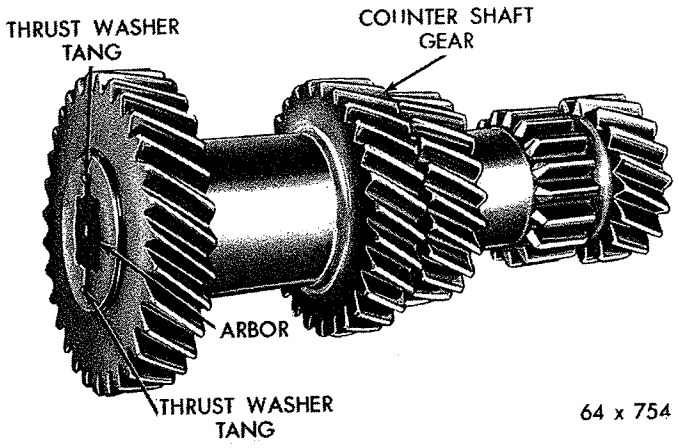


*Fig. 25—Countershaft Gear and Arbor Assembly*

(7) Place pinion shaft in a vise (with soft jaws), then install 16 bearing rollers in cavity of the shaft. Coat bearing rollers with heavy grease, then install bearing retaining snap ring in its groove.

(8) Install drive pinion and bearing in the case and position in the front bore. Tap lightly into place, using a plastic hammer. Install outer snap ring in the bearing groove.

(9) Using Tool C-3789, install a new oil seal in the retainer bore. Install main drive pinion bearing retainer and gasket. Install attaching bolts and tighten to 35 foot-pounds.

(10) Start countershaft in its bore at rear of the case. Raise countershaft gear until teeth mesh with the main drive pinion gear. (Be sure thrust washers remain in position on ends of arbor and tangs aligned with slots in the case.)

(11) Align countershaft arbor with bores in the case, then drive countershaft into the gear. Install the woodruff key. Continue to drive shaft into the case until end of shaft is flush with rear face of the case. Remove arbor Tool C-3938.

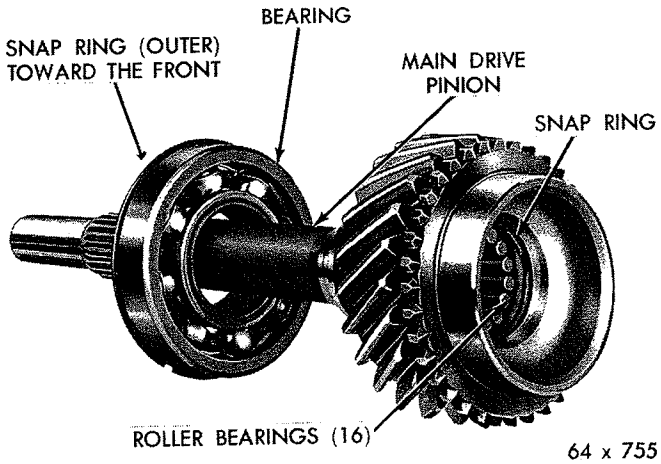


*Fig. 26—Main Drive Pinion and Bearing Assembly*

MyMopar.com

### Reverse Gear, Lever and Fork

The following step need only be done if the reverse shaft was removed because of oil leak.

(1) Install a new oil seal on reverse gearshift lever shaft. Coat lever shaft with Multi-purpose grease, then carefully install lever shaft into bore in the case (Fig. 23). Install reverse fork in the lever. Fill recess next to the shaft with Multi-purpose grease, then install the operating lever (Fig. 7). Install a flatwasher, lockwasher and nut. Tighten nut securely.

(2) Install reverse shift detent ball and spring. Install reverse detent ball spring retainer gasket and retainer. Tighten securely.

(3) Place reverse slider gearshaft in position in end of the case, and drive it in far enough to position reverse slider gear on protruding end of shaft with shift slot toward the rear (Fig. 21). At same time, engage slot with the reverse shift fork.

(4) With reverse slider gear correctly positioned, drive reverse gear shaft into case far enough to install the woodruff key. Drive the shaft, flush with end of the case (Fig. 21).

(5) Install back-up light switch and gasket (if so equipped), and tighten securely.

### Extension Housing, Bushing and Mainshaft

(1) Slide second speed gear over mainshaft (synchronizer cone toward rear) and down against shoulder on the shaft (Fig. 17).

(2) Slide first and second clutch sleeve gear assembly including 2nd gear stop ring over mainshaft (with shift fork slot toward front) and against the second speed gear. (Be sure stop ring is indexed with shift plates.) Install a new snap ring to secure (Fig. 17).

(3) Slide low gear stop ring over shaft, position and index with the shift plates.

(4) Slide first speed gear (synchronizer cone toward clutch sleeve gear just installed) over mainshaft into position against the clutch sleeve gear.

(5) Install mainshaft bearing retaining ring, followed by the mainshaft rear bearing. Using an arbor and a suitable tool, drive or press bearing down into position. Install a new snap ring to secure (Fig. 16).

(6) Unwind and slide yoke seal front stop ring into place on the mainshaft (Fig. 15). Slide seal on the shaft with lips of seal toward rear, then install rear snap ring.

(7) **Bushing Replacement:** If extension housing bushing requires replacement, drive out the oil seal with a suitable tool. Be sure not to damage oil seal surface in the housing. Drive bushing out of housing with Tool C-3996 or C-3974 (Fig. 27).

Slide a new bushing on installing end of Tool C-3996 or C-3974. Align oil hole in bushing with oil slot in housing, then drive bushing into place (Fig. 27). Drive a new seal into housing with Tool C-3995 or C-3972 (Fig. 6).

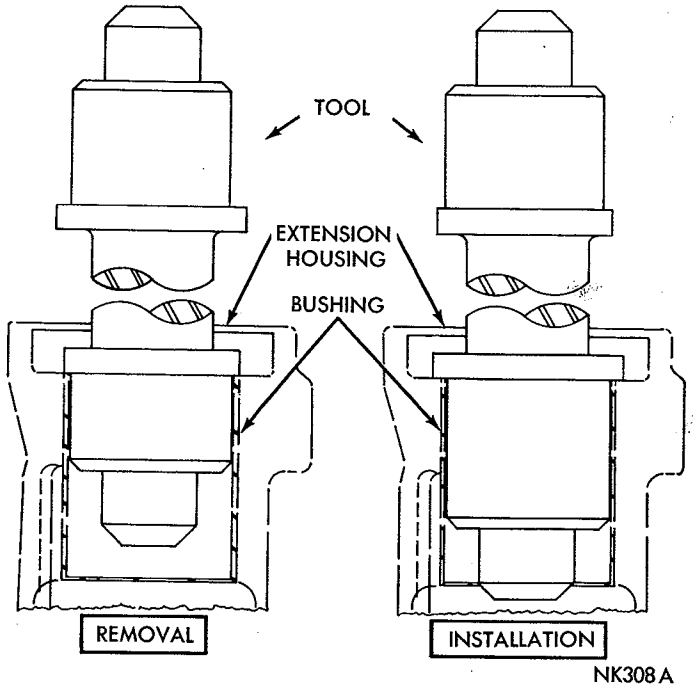


*Fig. 27—Replacing Extension Housing Bushing*

(8) Install partially assembled mainshaft into extension housing far enough to engage retaining ring in slot in the extension housing (Fig. 14). Compress retaining ring and at same time seat mainshaft in the extension housing (Fig. 13). (Be sure retaining ring is seated all around its slot.)

(9) Slide third speed gear over mainshaft (with synchronizer cone toward front) followed by the third gear stop ring.

(10) Install third and fourth speed synchronizer clutch gear assembly (including sleeve, shift plates and springs) on mainshaft (shift fork slot toward rear) against the third speed gear. Be sure and index rear

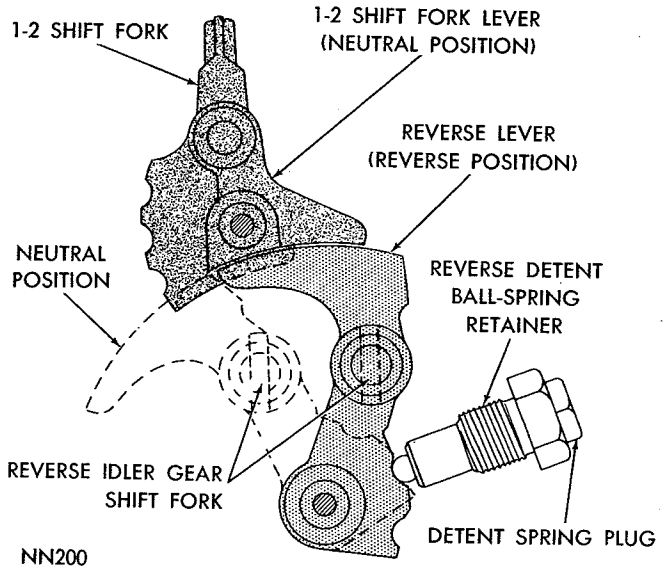


*Fig. 28—1st, 2nd and Reverse Shift Levers*

MyMopar.com

stop ring with clutch gear shift plates (Fig. 12).

(11) Install retaining snap ring (Fig. 12), then, using heavy grease, position front stop ring over clutch gear, again indexing ring slots with the shift plates (Fig. 12).

**CAUTION: It is very important that indexing of all stop rings and positioning of the gears and clutches on mainshaft be correct, or mating of extension housing to the case will not be possible without damage.**

(12) Coat a new extension housing to case gasket with grease (both sides) then place in position on the case.

(13) Center reverse slider gear on its shaft and move 3rd and 4th speed clutch sleeve slightly toward front, then carefully insert mainshaft into the case (Fig. 10). Be sure 3rd and 4th speed stop ring is indexed with shifter plates, and at same time align and push in on extension housing to bottom it against the gasket and case.

### *Gearshift Housing and Mechanism*

The following 4 steps need only be done if the gearshift housing was disassembled previously because of leaking seals.

(1) Slide interlock sleeve into position in the housing (Fig. 9). Install a new oil seal on each gear shifter shaft. Coat one of the shafts with Multi-purpose grease, then carefully install shaft in the shift housing. Fill recess next to shaft with Multi-purpose grease, then install operating lever (Fig. 7). Install a flatwasher, lockwasher and nut. Tighten nut securely.

(2) Place a detent ball in the sleeve, followed by the spring and interlock pin. Coat other gear shifter shaft with Multi-purpose grease and start shaft into the housing. Place remaining detent ball on the spring and compress ball and spring with a small screwdriver, then push shaft in until seated. Fill recess next to shaft with Multi-purpose grease, then install operating lever, flatwasher, lockwasher and nut. Tighten nut securely. Install gearshift forks in gear shifter shafts and position forks and shifter shafts in neutral position (Fig. 9).

(3) Position 1st and 2nd, 3rd and 4th clutch sleeve gears in the neutral position. Using a new gasket, install shift housing making sure shift forks align with grooves in clutch sleeve gears. Tighten retaining bolts finger tight.

(4) Shift transmission into reverse, then tighten the two end center alignment bolts slightly. Tap shift housing downward to cause a drag between the lever "cams" when shifting in and out of reverse (Fig. 28). To obtain a better feel of the drag, back out the detent spring plug. **Hold reverse detent ball-spring retainer tight against the case with a wrench while removing plug.**

If a drag condition cannot be obtained, install a new 1st and 2nd lever (stamped A or B) which are selective in cam size.

(5) **A light drag or interference is desirable;** therefore, tap shift housing upward just enough so that a **very light drag** can be felt when shifting in and out of reverse. Tighten shift housing bolts securely and recheck reverse shift effort. Readjust if necessary. Install and tighten reverse detent spring plug.

(6) Install the speedometer pinion and adapter assembly. Refer to Page 18.

## TRANSMISSION INSTALLATION

Place a small amount of short fibre wheel bearing lubricant around inner end of pinion shaft pilot bushing in flywheel and on pinion bearing retainer release bearing sleeve area. **Do not lubricate end of the pinion shaft, clutch disc splines or clutch release levers.**

(1) With transmission on a suitable jack, slide assembly under vehicle.

(2) Raise transmission until drive pinion is centered in clutch housing bore.

(3) Roll transmission slowly forward until pinion shaft enters the clutch disc. Turn pinion shaft until splines are aligned, then work transmission forward until seated against the clutch housing. **Do not allow transmission to "hang" after pinion shaft has entered the clutch disc.**

(4) Install transmission to clutch housing bolts and tighten to 50 foot-pounds.

(5) Using a pointed drift, align crossmember bolt holes, then install attaching bolts. Tighten to 35 foot-pounds.

(6) Remove engine support fixture and disengage the hooks from holes in the frame side rails. Install extension housing to crossmember bolts and tighten to 35 foot-pounds.

(7) Attach shift unit to extension housing and secure with the three bolts. Connect shift control rods to transmission levers and connect speedometer cable.

(8) Clean and lubricate sliding spline yoke as outlined in Group 0 in this Manual. Carefully guide front universal joint yoke into extension housing and onto mainshaft splines. Connect propeller shaft to rear axle pinion yoke.

(9) Reconnect exhaust pipes (if removed). Tighten bolts securely.

(10) Fill transmission with Multi-Purpose Gear Oil SAE 140. If shift effort becomes extremely high during cold weather, Multi-Purpose Gear Oil SAE 80 or 90 should be used. Automatic Transmission Fluid AQ-ATF Suffix "A" may also be used in extremely cold climates.

(11) Road test vehicle to make sure transmission shifts smoothly and operates quietly.

(12) If shift linkage requires adjustment, refer to page 18.

MyMopar.com

# TORQUEFLITE TRANSMISSIONS
## (A-904-G, A-904-LA, A-727-A and B)

### INDEX


| | Page |
|---|---|
| Gearshift and Parking Lock Controls | 41 |
| General Information | 29 |
| Hydraulic Control System | 40 |
| Operating Instructions | 41 |
| Service Diagnosis | 42 |
| Service in Vehicle | |
| Air Pressure Tests | 62 |
| Aluminum Thread Repair | 47 |
| Band Adjustments | 55 |
| Console Gearshift | 53 |
| Extension Housing and Bearing | 65 |
| Extension Housing Yoke Seal | 64 |
| Governor | 66 |
| Hydraulic Control Pressure Adjustments | 62 |
| Hydraulic Control Pressure Tests | 60 |
| Lubrication | 47 |
| Neutral Starting Switch | 54 |
| Parking Lock Components | 67 |
| Speedometer Pinion | 63 |
| Steering Column and Gearshift | 49 |
| Throttle Linkage Adjustment | 56 |
| Valve Body and Accumulator Piston | 67 |
| Service Out of Vehicle | |
| Assembly—Sub-Assembly Installation | 93 |
| Disassembly—Sub-Assembly Removal | 70 |
| Installation—Transmission and Converter | 96 |
| Recondition Sub-Assemblies | 73 |
| Accumulator Piston and Spring | 76 |
| Extension Housing Bushing and Oil Seal | 76 |
| Front Clutch—A-904-G and A-904-LA | 81 |
| Front Clutch—A-727-A and B | 82 |
| Governor and Support | 77 |
| Kickdown Servo and Band | 92 |
| Low-Reverse Servo and Band | 92 |
| Oil Pump and Reaction Shaft Support —A-904-G and A-904-LA | 77 |
| Oil Pump and Reaction Shaft Support —A-727-A and B | 79 |
| Overrunning Clutch | 90 |
| Parking Lock Sprag | 77 |
| Planetary Gear Train—A-904-G and A-904-LA | 88 |
| Planetary Gear Train—A-727-A and B | 89 |
| Rear Clutch—A-904-G and A-904-LA | 84 |
| Rear Clutch—A-727-A and B | 86 |
| Valve Body Assembly | 73 |
| Removal—Transmission and Converter | 68 |
| Pump Oil Seal | 70 |
| Starter Ring Gear | 69 |
| Torque Converter Flushing | 69 |
| Specifications | 98 |
| Tightening Reference | 99 |


## GENERAL INFORMATION

The Torque Flite Transmission model identification marking shown in the following application chart, are cast in raised letters about 3/8 inch high on the lower left side of the bell housing. Transmission usage is determined by the type of engine with which it is installed.

## TRANSMISSION APPLICATION CHART

| Engine Type | Displacement Cubic Inch | Identification Marking |
|---|---|---|
| 6 Cyl. | 170-225 | A-904-G |
| 8 Cyl. | 273 | A-904-LA |
| 8 Cyl. | 318 | A-727-A |
| 8 Cyl. | 361-383-426 | A-727-B |

The A-727-A, mounted with an adapter plate between the transmission and engine, is available for heavy duty police and taxi service with the 6 Cyl., 225 Cu. In. engine.

Because of the similarity in design and in servicing the three transmissions, the procedures have been combined in this Manual. Where variations in procedures occur, application to the A-904-G, A-904-LA or A-727-A and B is indicated.

**CAUTION: Transmission operation requirements are different for some vehicles due to high performance engines or special equipment applications. Therefore, some internal part will be different from standard to provide the desired transmission operation. These "special" parts are listed in applicable Parts Catalog; therefore, be sure they are used when replacement is necessary.**

The transmission combines a torque converter with a fully-automatic 3-speed gear system (Figs. 1 and 2). The converter housing and transmission case are an integral aluminum casting. The transmission consists of two multiple disc clutches, and over-running clutch, two servos and bands, and two planetary gear sets to provide three forward ratios and a reserve ratio. The common sun gear of the planetary gear sets is connected to the front clutch by a driving shell which is splined to the sun gear and to the front clutch retainer. The hydraulic system consists of an oil pump, and a single valve body which contains all of the valves except the governor valve.

Venting of the transmission is accomplished by a drilled passage through the upper part of the oil pump housing.

The torque converter is attached to the crankshaft through a flexible driving plate. Cooling of the converter is accomplished by circulating the transmission

MyMopar.com

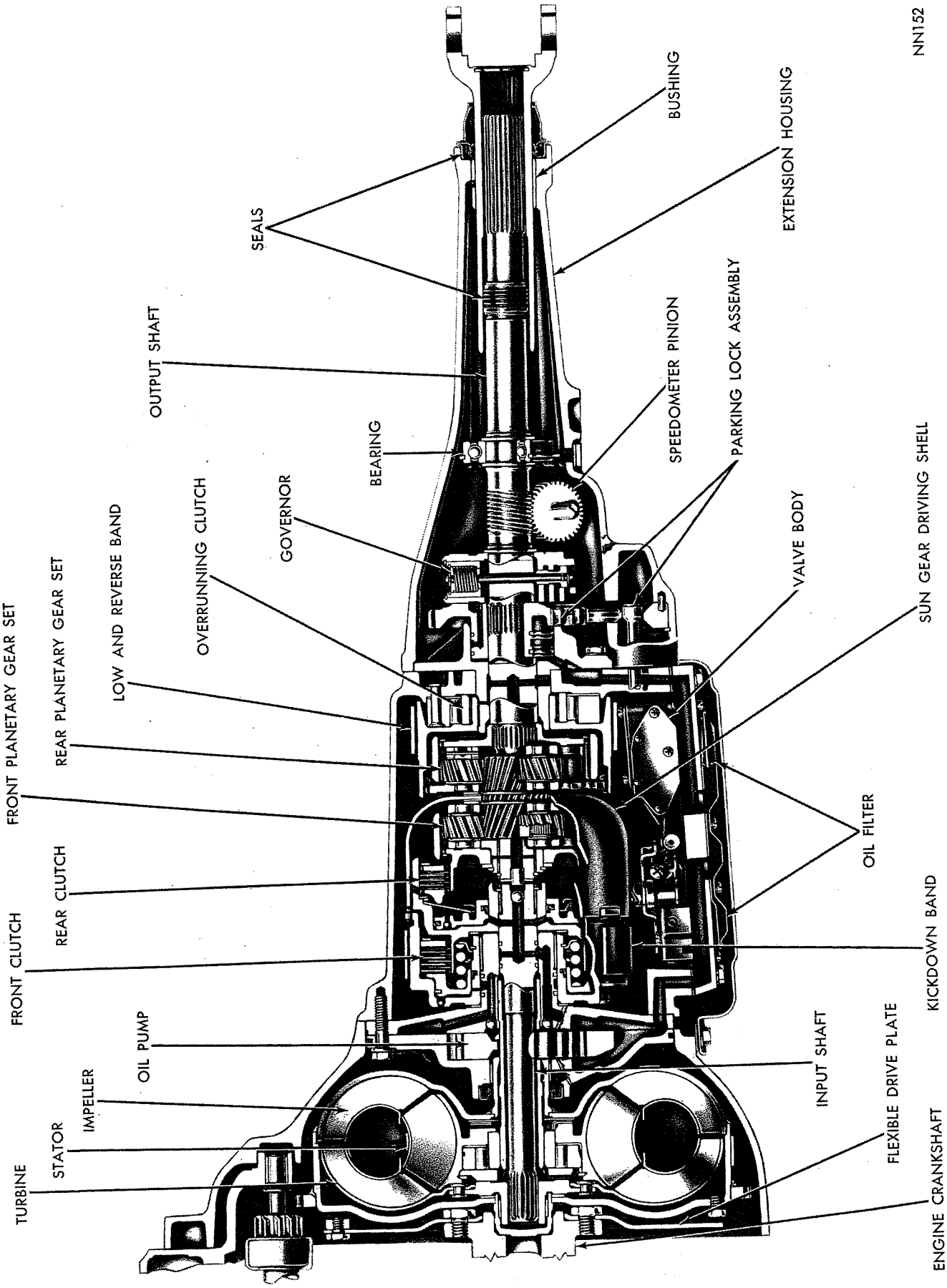


***Fig. 1—TorqueFlite Transmission and Torque Converter (A-904-G and A-904-LA***

MyMopar.com

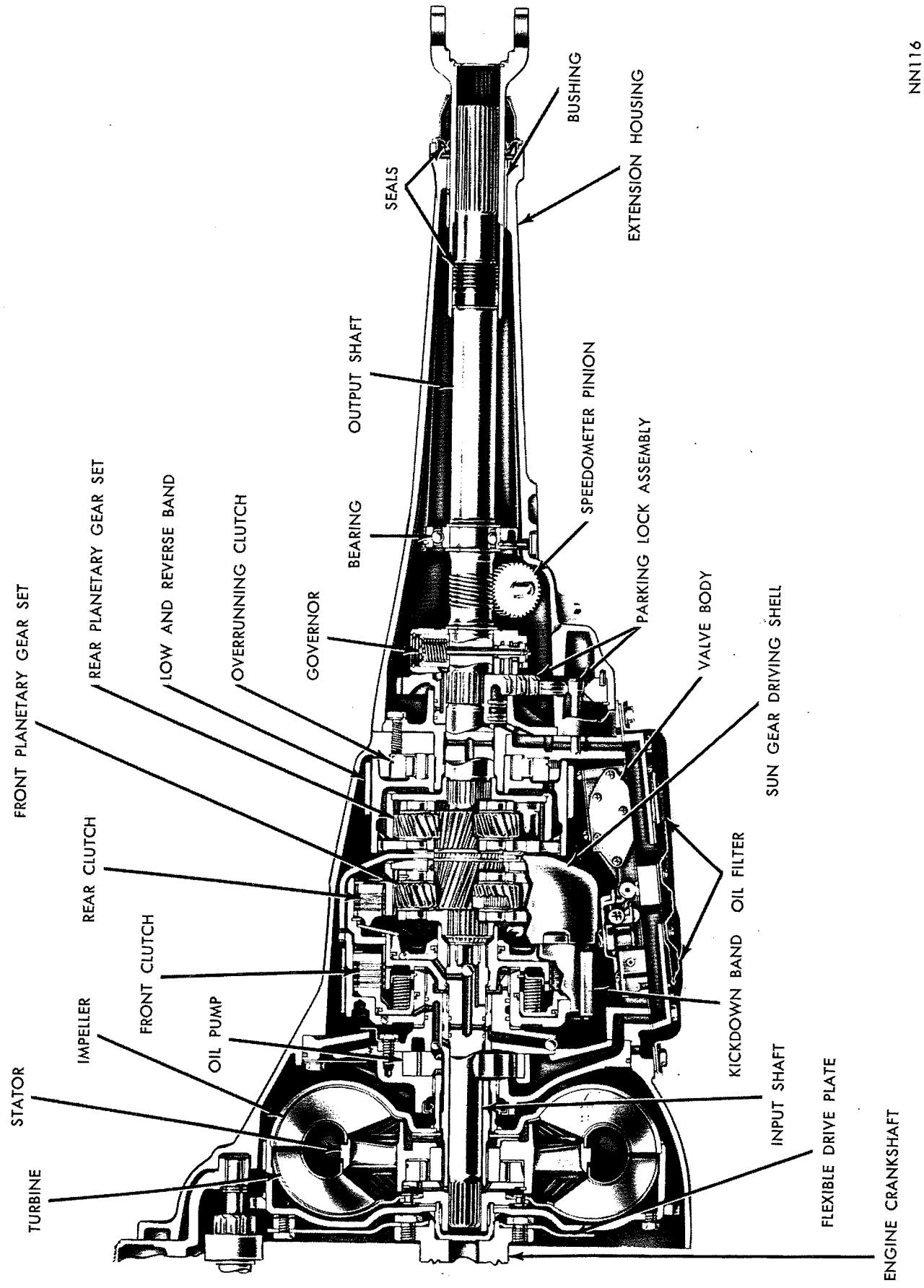


*Fig. 2—TorqueFlite Transmission and Torque Converter (A-727-A and B)*

MyMopar.com

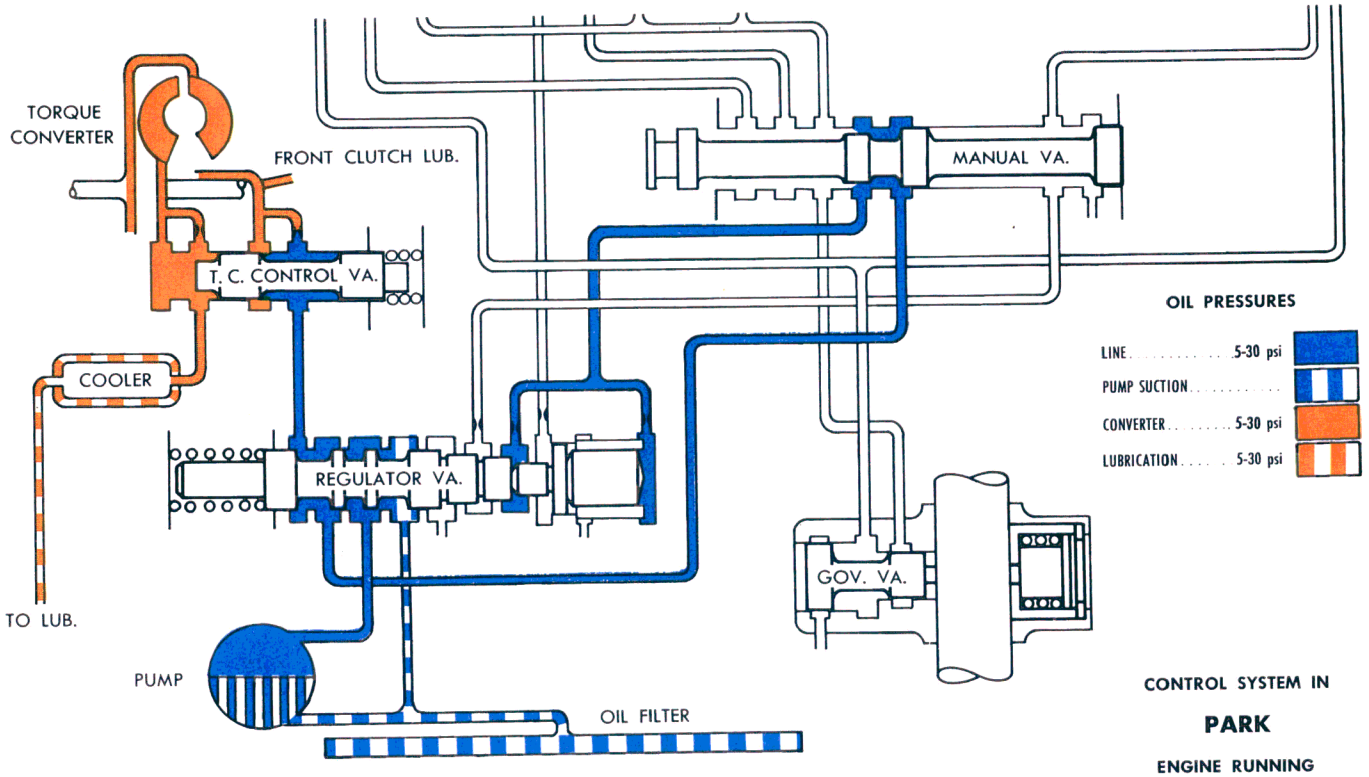


***Park Hydraulic Circuits***

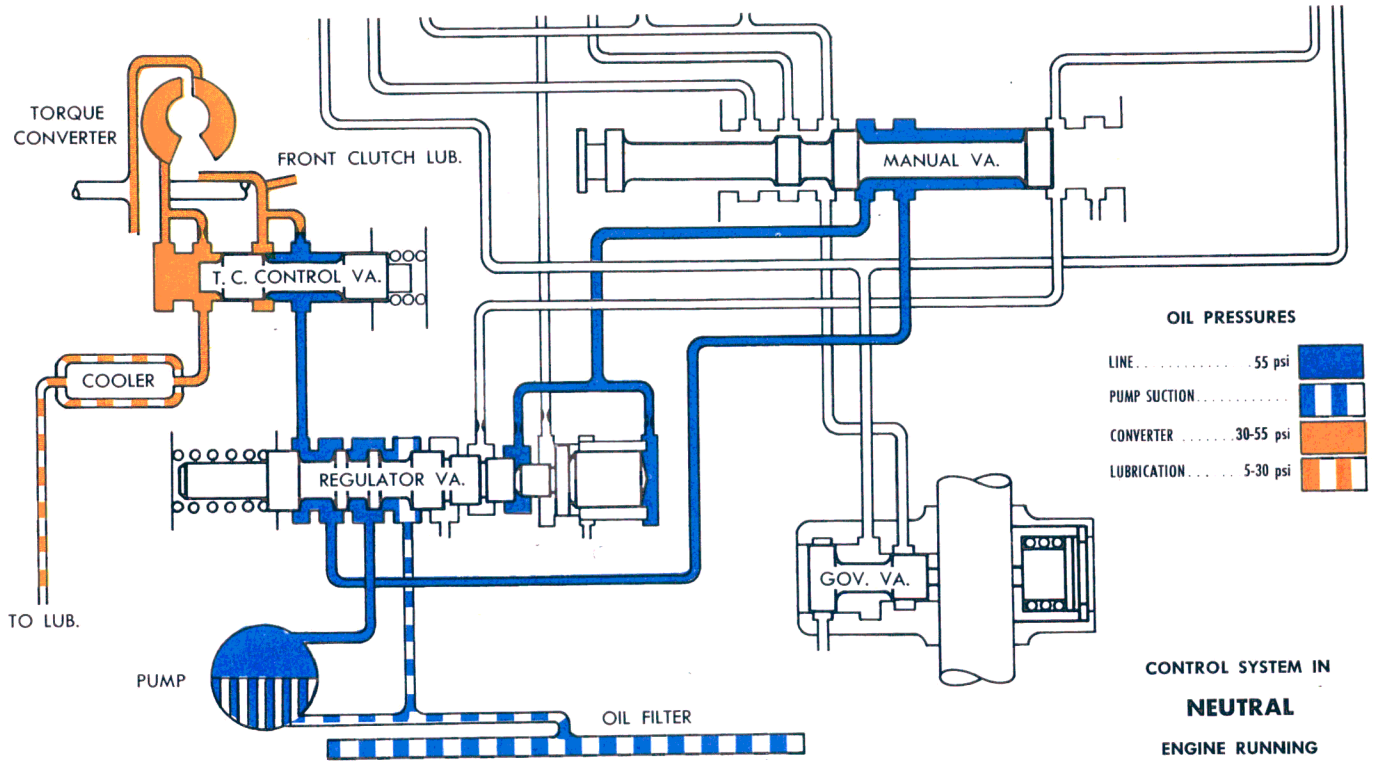


***Neutral Hydraulic Circuits***

MyMopar.com

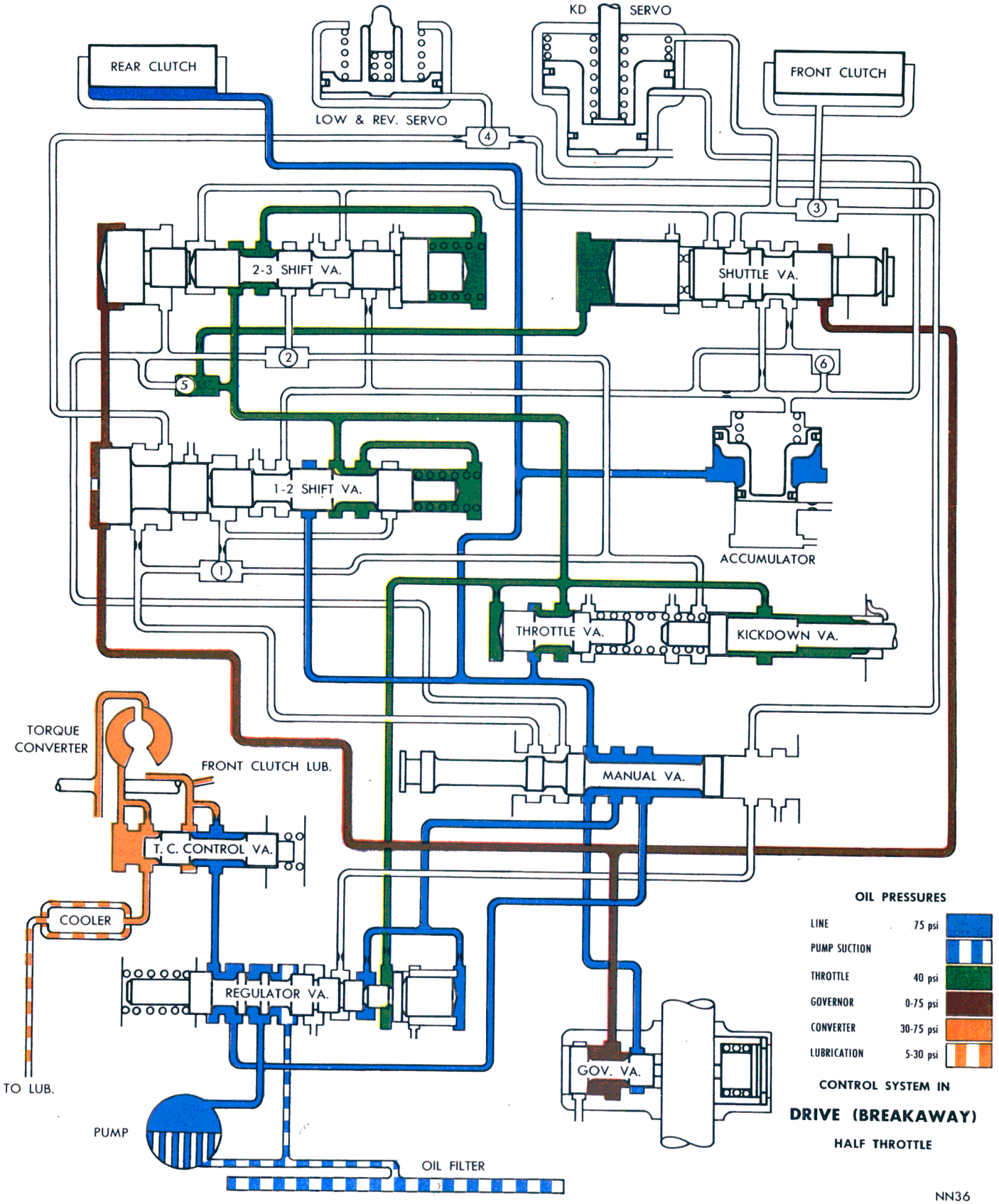


***Drive-Breakaway Hydraulic Circuits***

MyMopar.com

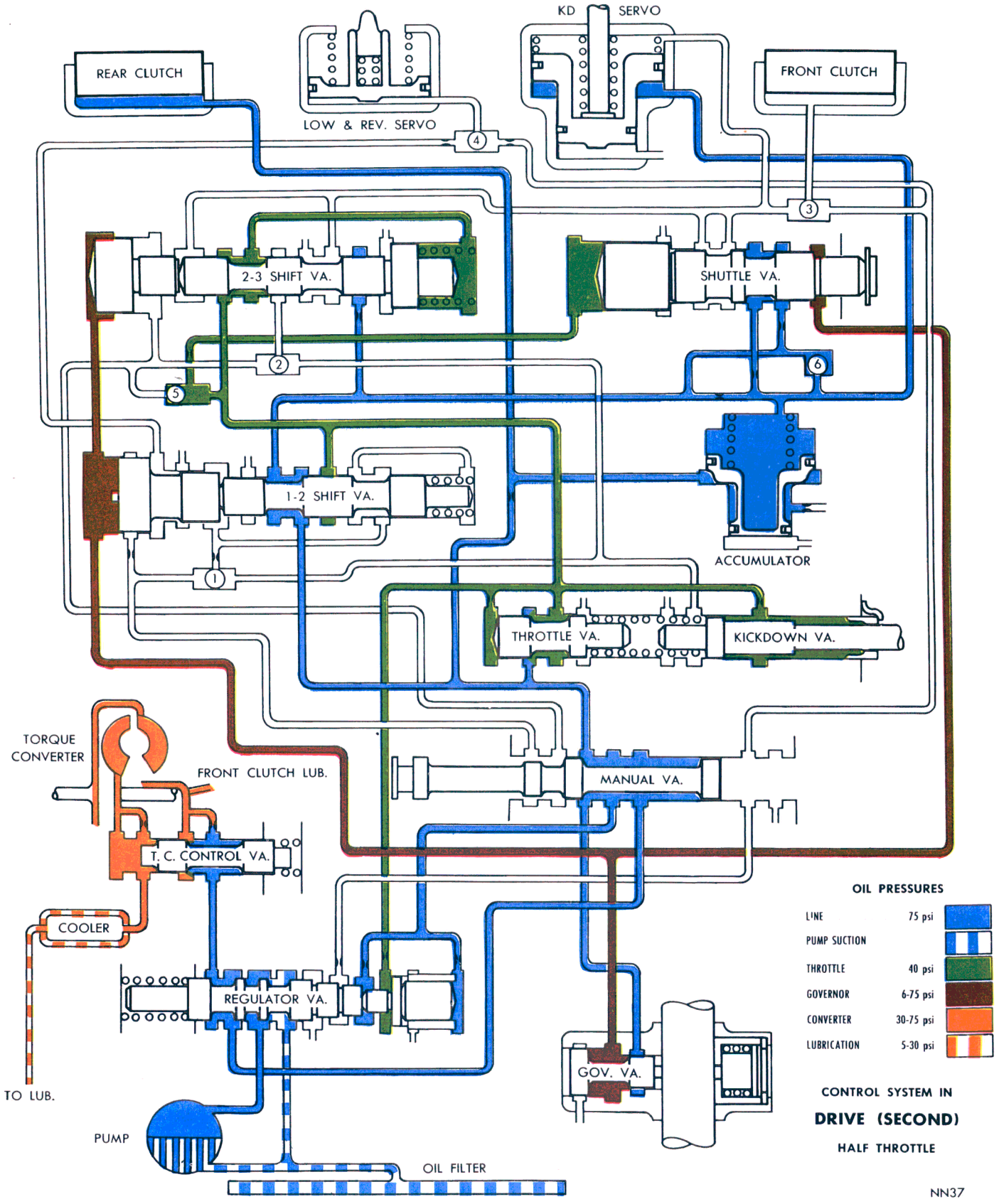


***Drive-Second Hydraulic Circuits***

MyMopar.com

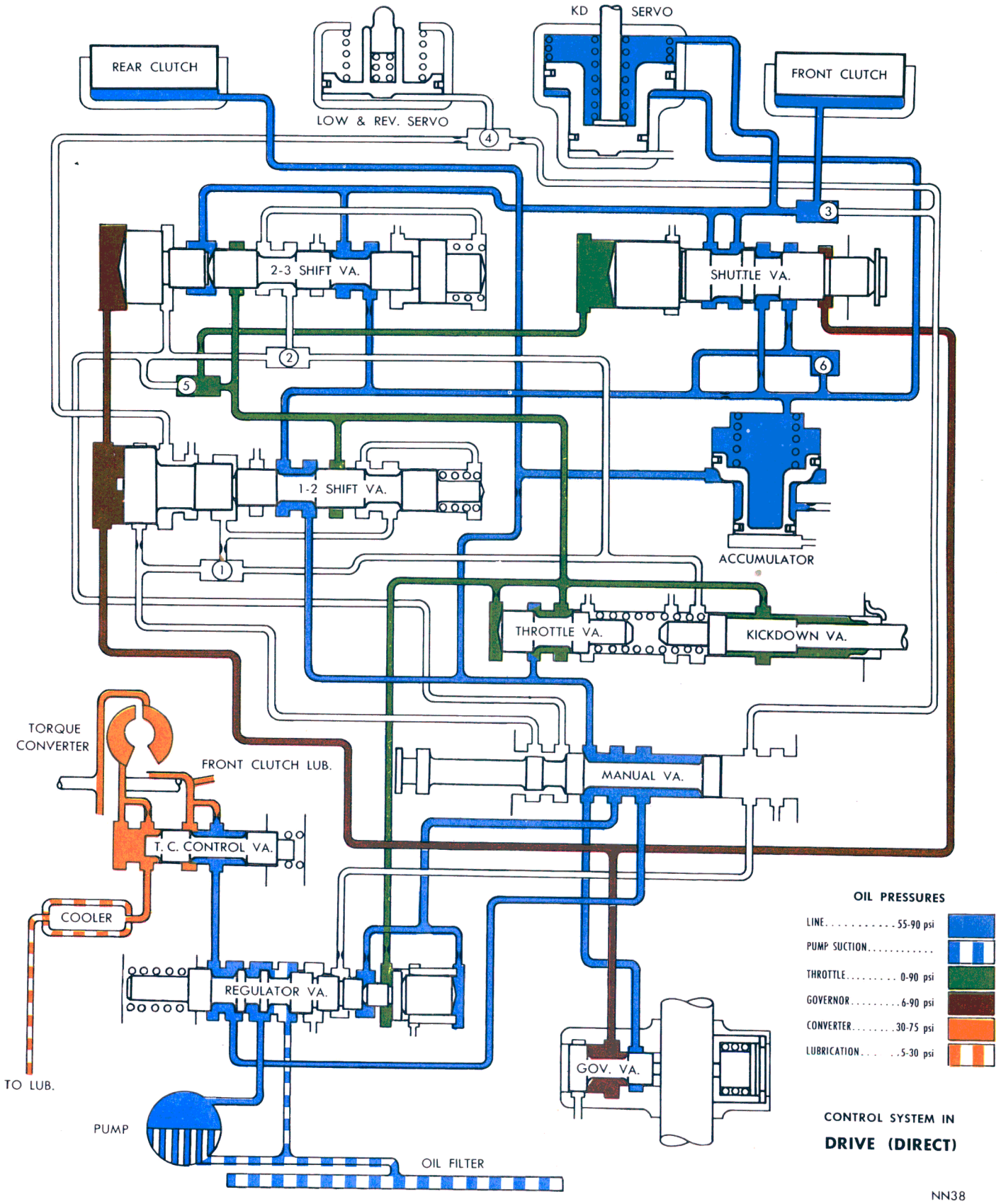


***Drive-Direct Hydraulic Circuits***

MyMopar.com

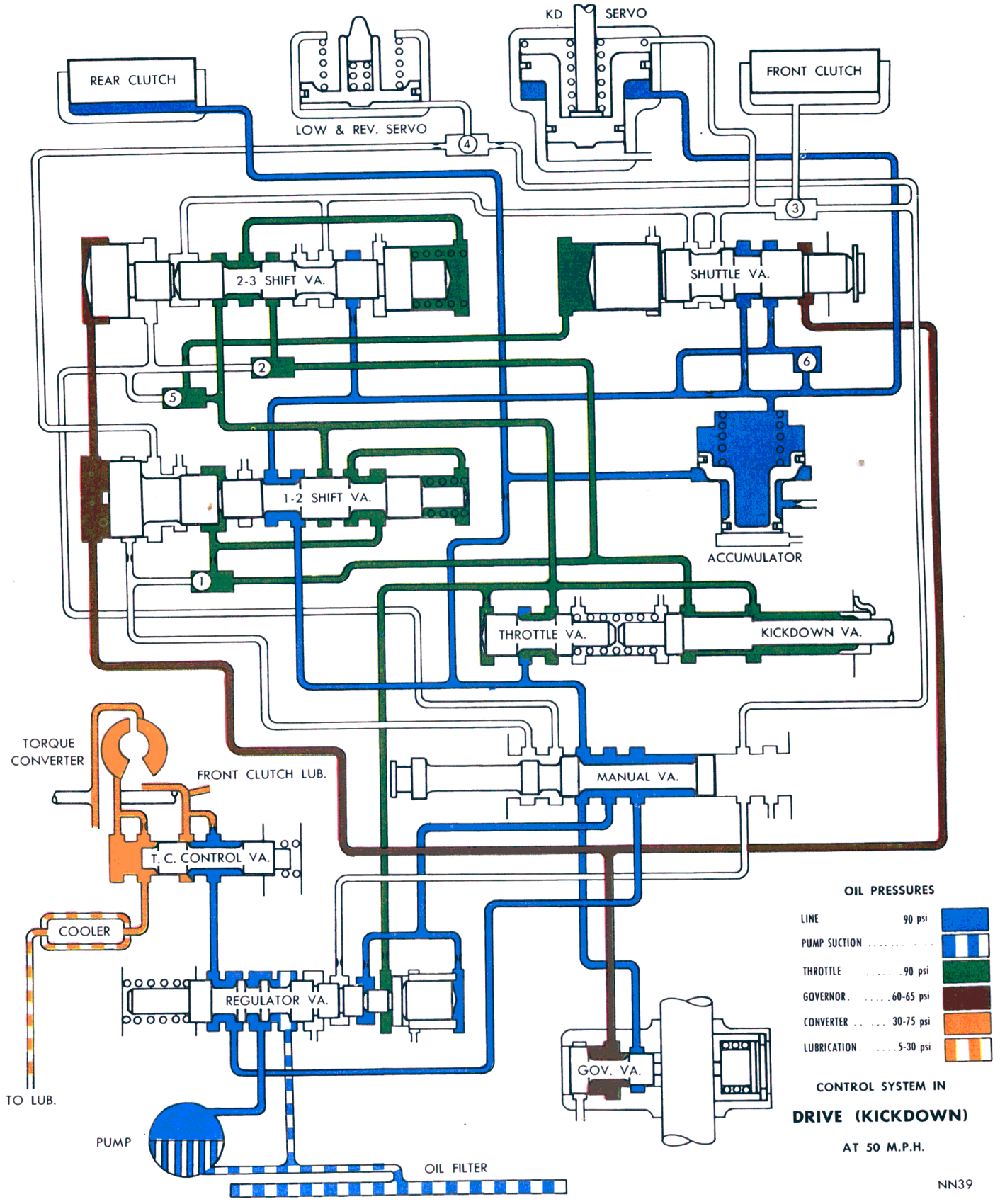


***Drive-Kickdown Hydraulic Circuits***

MyMopar.com

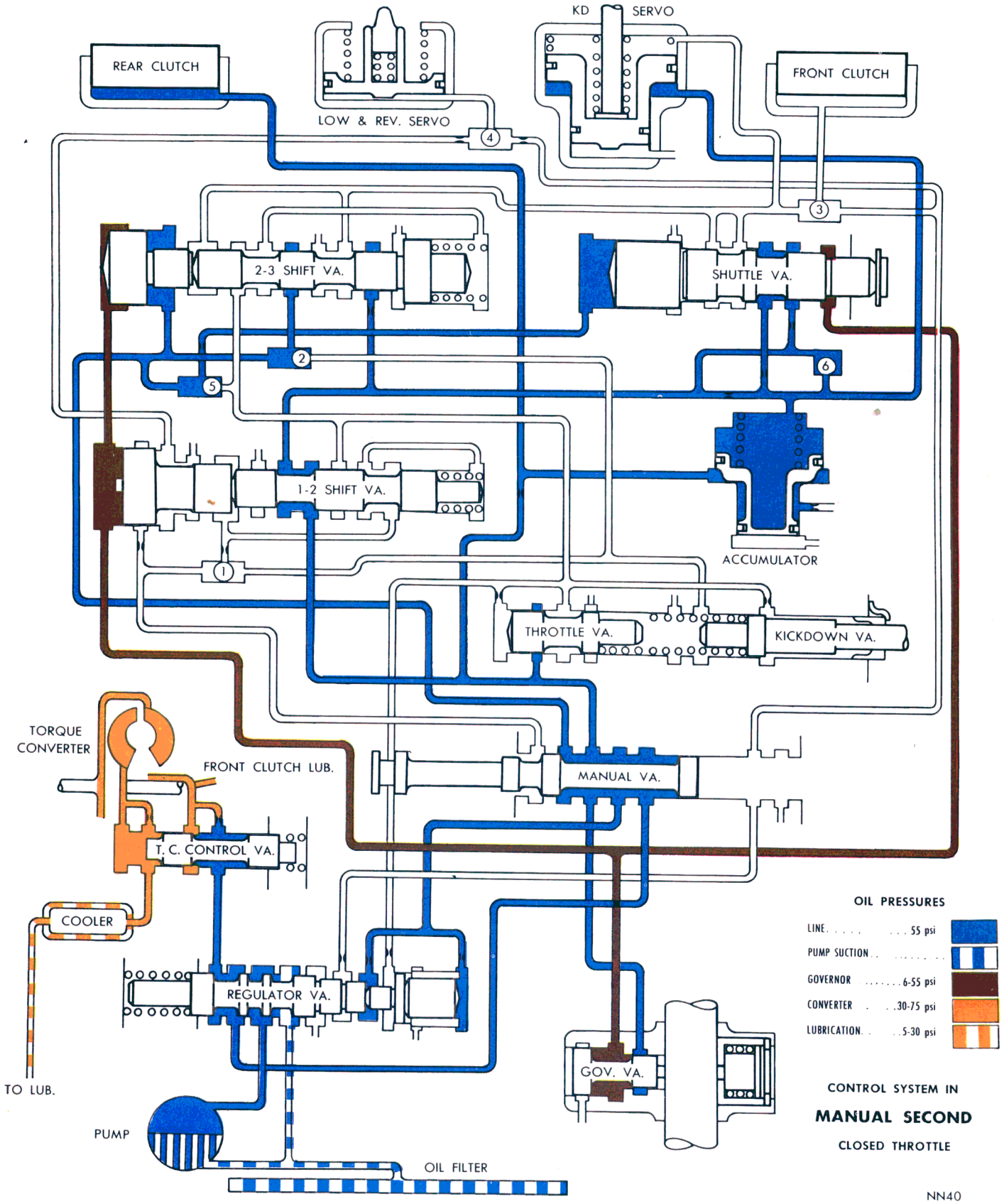


***Selector Lever Second—Hydraulic Circuits***

MyMopar.com

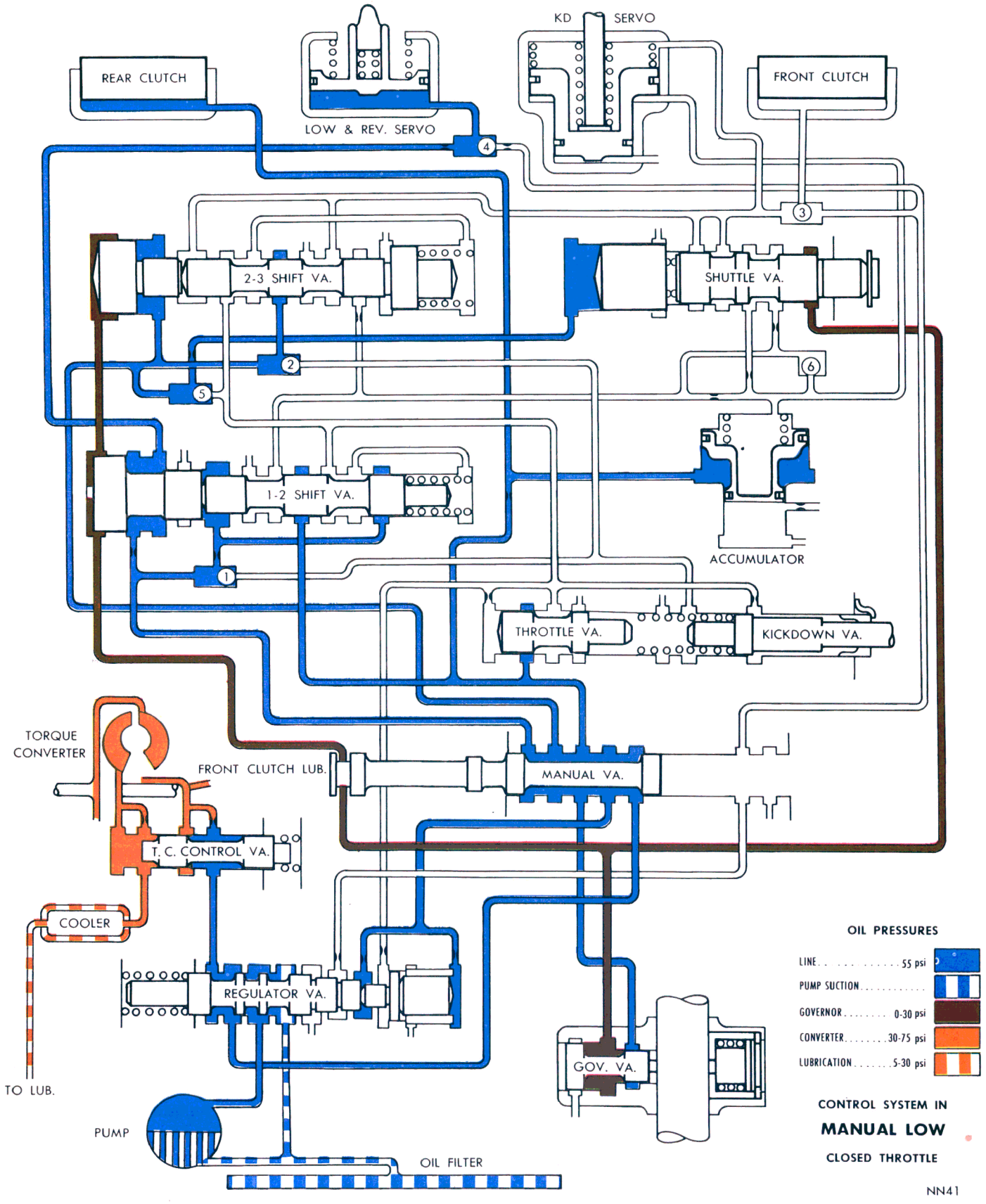


***Selector Lever Low—Hydraulic Circuits***

MyMopar.com

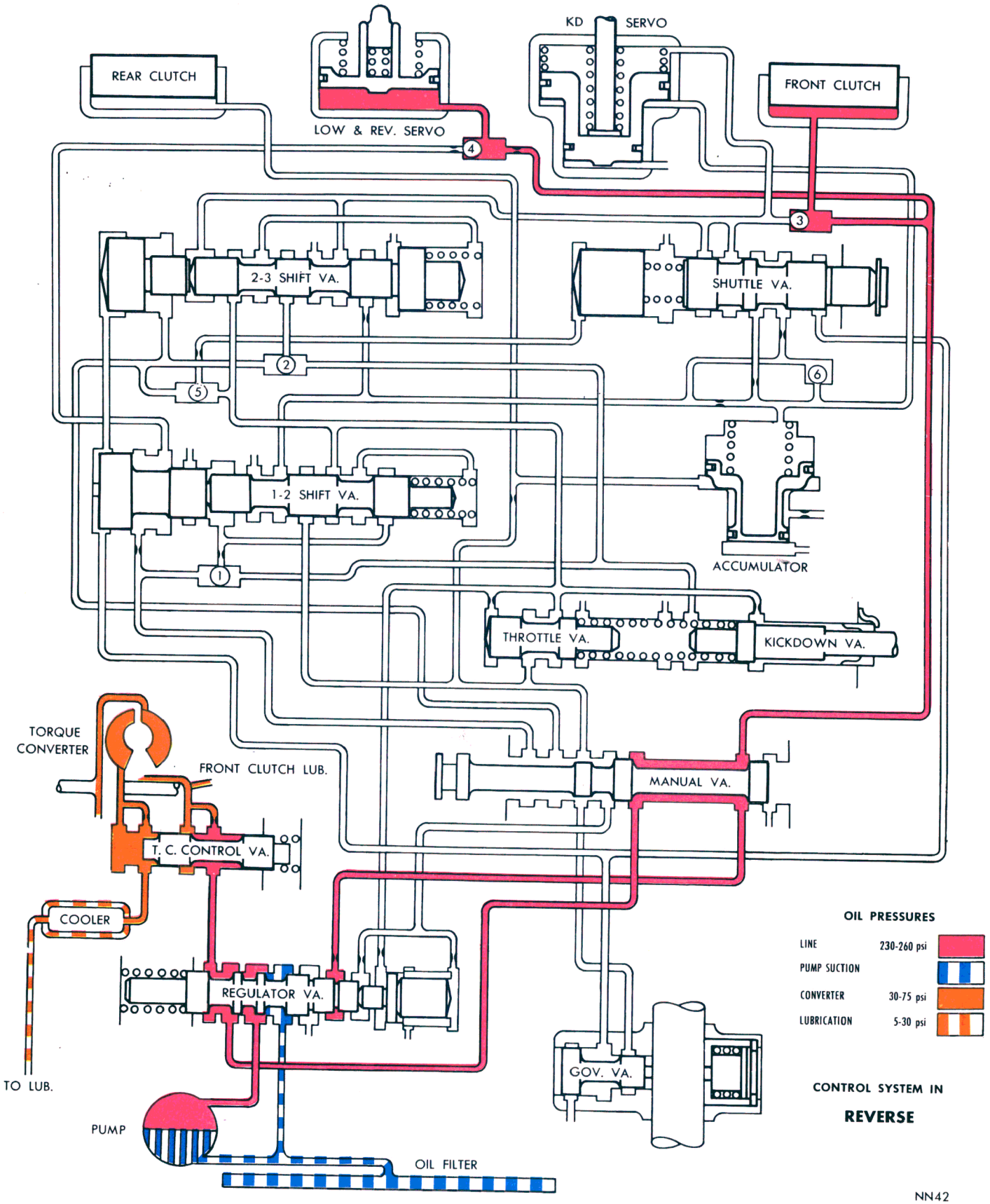


***Reverse Hydraulic Circuits***

MyMopar.com

## CLUTCH ENGAGEMENT AND BAND APPLICATION CHART

| LEVER POSITION DRIVE-RATIO | FRONT CLUTCH | REAR CLUTCH | FRONT (KICKDOWN) BAND | REAR (LOW-REV) BAND | OVERRUNNING CLUTCH |
|---|---|---|---|---|---|
| N-NEUTRAL | DISENGAGED | DISENGAGED | RELEASED | RELEASED | NO MOVEMENT |
| D-DRIVE (Breakaway) | DISENGAGED | ENGAGED | RELEASED | RELEASED | HOLDS |
| 2.45 to 1 (Second) | DISENGAGED | ENGAGED | APPLIED | RELEASED | OVER RUNS |
| 1.45 to 1 (Direct) 1.00 to 1) | ENGAGED | ENGAGED | RELEASED | RELEASED | OVER RUNS |
| KICKDOWN (To Second) | DISENGAGED | ENGAGED | APPLIED | RELEASED | OVER RUNS |
| 1.45 to 1 (To Low) 2.45 to 1 | DISENGAGED | ENGAGED | RELEASED | RELEASED | HOLDS |
| 2-SECOND 1.45 to 1 | DISENGAGED | ENGAGED | APPLIED | RELEASED | OVER RUNS |
| 1-LOW 2.45 to 1 | DISENGAGED | ENGAGED | RELEASED | APPLIED | PARTIAL HOLD |
| R-REVERSE 2.20 to 1 | ENGAGED | DISENGAGED | RELEASED | APPLIED | NO MOVEMENT |

fluid through an oil-to-water type cooler, located in the radiator lower tank. The torque converter assembly is a sealed unit which cannot be disassembled.

The transmission fluid is filtered by an internal "Dacron Type" filter attached to the lower side of the valve body assembly.

Engine torque is transmitted to the torque converter then, through the input shaft to the multiple discs clutches in the transimission. The power flow depends on the application of the clutches and bands. Refer to "Clutch Engagement and Band Application Chart."

## HYDRAULIC CONTROL SYSTEM

The hydraulic control circuits on pages 32 through 39 show the position of the various valves with color coded passages to indicate those under hydraulic pressure for all operations of the transmission.

The hydraulic control system makes the transmission fully automatic, and has four important functions to perform. In a general way, the components of any automatic control system may be grouped into the following basic groups:

The pressure supply system, the pressure regulating valves, the flow control valves, and the clutches and band servos.

Taking each of these basic groups or systems in turn, the control system may be described as follows:

### *Pressure Supply System*

The pressure supply system consists of an oil pump driven by the engine through the torque converter. The single front pump furnishes pressure for all the hydraulic and lubrication requirements.

### *Pressure Regulating Valves*

The pressure regulating valves consist of a regulator valve which controls line pressure at a value dependent on throttle opening.

The torque converter control valve maintains torque converter operating pressure and transmission lubricating pressure.

The governor valve transmits regulated pressure to the transmission (in conjunction with throttle pressure) to control upshift and downshift speeds.

The throttle valve transmits regulated pressure to the transmission (in conjunction with governor pressure) to control upshift and downshift speeds.

### *Flow Control Valves*

The manual valve obtains the different transmission drive ranges as selected by the vehicle operator.

The 1-2 shift valve automatically shifts the transmission from low to second or from second to low depending on the vehicle operation.

The 2-3 shift valve automatically shifts the transmission from second to direct or from direct to second depending on the vehicle operation.

The kickdown valve makes possible a forced downshift from direct to second-second to breakaway or direct to breakaway (depending on vehicle speed) by depressing the accelerator pedal past the detent "feel" near wide open throttle.

The shuttle valve has two separate functions and

MyMopar.com

performs each independently of each other. The first is that of providing fast release of the kickdown band, and smooth front clutch engagement when the driver makes a "lift-foot" upshift from second to direct. The second function of the shuttle valve is to regulate the application of the kickdown servo and band when making direct to second kickdowns.

### *Clutches, Band Servos and Accumulator*

The front and rear clutch pistons, and both servo pistons are moved hydraulically to engage the clutches and apply the bands. The pistons are released by spring tension when hydraulic pressure is released. On the 2-3 upshift, the kickdown servo piston is released by spring tension and hydraulic pressure.

The accumulator controls the hydraulic pressure on the apply side of the kickdown servo during the 1-2 shift; thereby, cushioning the kickdown band application at any throttle position.

## GEARSHIFT AND PARKING LOCK CONTROLS

The transmission is controlled by a "lever type" gearshift incorporated within the steering column. The control has six selector lever positions: P (park), R (reverse), N (neutral), D (drive), 2 (second) and 1 (low). Some vehicles are equipped with a "lever type" console gearshift which has the same selector lever positions. The parking lock is applied by moving the selector lever past a gate to the P position.

**CAUTION: Never apply the parking lock until the vehicle has stopped; otherwise, a severe ratcheting noise will occur.**

## OPERATING INSTRUCTIONS

The transmission will automatically upshift and downshift at approximately the speeds shown in the "Shift Pattern Summary Chart." **All shift speeds given in the "Shift Pattern Summary Chart" may vary somewhat due to production tolerances and rear axle ratios. This is not too important; however, the quality of the shifts is very important. All shifts should be smooth, responsive, and with no noticeable engine runaway.**

### *Starting the Engine*

The engine will start with the selector lever in either the P (park) or N (neutral) positions.

## SHIFT PATTERN SUMMARY CHART
### (Six Cylinder Vehicles)

| Condition | VEHICLE SPEED TO AXLE RATIOS | | | | | |
|---|---|---|---|---|---|---|
| | Valiant 6.50-13 | | Belvedere 6.95-14 | | Fury 7.35-14 | |
| | 3.23:1 | 3.55:1 | 2.93:1 | 3.55:1 | 2.93:1 | 3.23:1 |
| Closed Throttle 1-2 Upshift | 6-11 | 5-10 | 6-12 | 5-10 | 6-12 | 6-11 |
| Closed Throttle 2-3 Upshift | 11-15 | 10-14 | 11-16 | 9-13 | 11-16 | 10-15 |
| Wide Open Throttle 1-2 Upshift | 26-41 | 23-37 | 30-42 | 25-35 | 29-41 | 26-37 |
| Wide Open Throttle 2-3 Upshift | 57-69 | 53-64 | 62-76 | 50-62 | 61-74 | 55-67 |
| 3-2 Kickdown Limit | 50-62 | 46-57 | 53-68 | 44-56 | 52-66 | 47-60 |
| 3-1 Kickdown Limit | 25-36 | 22-33 | 29-37 | 24-31 | 28-36 | 25-33 |
| Closed Throttle Downshift | 4-10 | 4-9 | 5-11 | 4-9 | 5-11 | 4-10 |

## SHIFT PATTERN SUMMARY CHART
### (Eight Cylinder Vehicles)

| Condition | VEHICLE SPEED TO AXLE RATIOS | | | | | | |
|---|---|---|---|---|---|---|---|
| | Valiant 7.00-13 | | Belvedere 7.35-14 | | Fury 7.75-14 | | 426 Cu. In. Eng. 8.25-14 |
| | 2.93:1 | 3.23:1 | 2.93:1 | 3.23:1 | 2.93:1 | 3.23:1 | 3.23:1 |
| Closed Throttle 1-2 Upshift | 6-12 | 6-11 | 6-12 | 6-11 | 7-13 | 6-12 | 6-12 |
| Closed Throttle 2-3 Upshift | 12-17 | 11-15 | 11-16 | 10-15 | 12-17 | 11-16 | 11-16 |
| Wide Open Throttle 1-3 Upshift | 28-46 | 26-42 | 29-41 | 26-37 | 29-41 | 26-37 | 33-48 |
| Wide Open Throttle 2-3 Upshift | 64-78 | 58-70 | 61-74 | 55-67 | 63-75 | 57-68 | 67-77 |
| 3-2 Kickdown Limit | 56-70 | 51-63 | 52-66 | 47-60 | 54-66 | 49-60 | 59-70 |
| 3-1 Kickdown Limit | 27-41 | 25-37 | 28-36 | 25-33 | 28-36 | 25-33 | 25-44 |
| Closed Throttle Downshift | 5-11 | 4-10 | 5-11 | 4-10 | 5-12 | 4-11 | 4-11 |

MyMopar.com

(1) As a safety precaution when starting in the N (neutral) position, apply the parking or foot brake.

(2) Depress the accelerator pedal one-third of travel to insure proper choke operation.

(3) Turn the ignition key all the way to the right to START position. When the engine starts, release the key and it will return to the ON position.

**NOTE: The Torque Flite transmission used on 1966 model vehicles will not permit starting the engine by pushing or towing.**

### *Mountain Driving*

When driving in the mountains with either heavy loads or when pulling trailers, the 2 (second) or 1 (low) position should be selected on upgrades which require heavy throttle for ½ mile or more. Lower ratios reduce possibility of overheating the transmission and converter under these conditions. 1 (low) position is for severe operation or to obtain better control.

### *Towing Vehicle*

**Transmission Inoperative:** Tow the vehicle with a rear end pickup or remove the propeller shaft.

**Transmission Operating Properly:** The vehicle may be towed safely in N (neutral) with rear wheels on the ground at a speed not to exceed 30 mph. **If the vehicle is to be towed for extended distances, it should be done with a rear end pickup or the propeller shaft removed.** Because the transmission receives lubrication only when the engine is running, it is good practice to always tow a disabled vehicle with a rear end pickup or remove the propeller shaft.

## SERVICE DIAGNOSIS

The transmission should not be removed nor disassembled until a careful diagnosis is made, the definite cause determined and all possible external corrections performed. In diagnosing any abnormal shift condition, always make the hydraulic pressure tests before disassembly or replacement of parts.

| Condition | Possible Cause | Correction |
|---|---|---|
| **HARSH ENGAGEMENT IN D, 1, 2 AND R** | (a) Engine idle speed too high. | (a) Adjust the engine idle speed to 500 rpm. Readjust throttle linkage. |
| | (b) Hydraulic pressures too high or low. | (b) Inspect the fluid level, then perform hydraulic pressure tests and adjust to specifications. |
| | (c) Low-reverse band out of adjustment. | (c) Adjust the low-reverse band. |
| | (d) Valve body malfunction or leakage. | (d) Perform pressure tests to determine cause and correct as required. |
| | (e) Accumulator sticking, broken rings or spring. | (e) Inspect the accumulator for sticking, broken rings or spring. Repair as required. |
| | (f) Low-reverse servo, band or linkage malfunction. | (f) Inspect the servo for damaged seals, binding linkage of faulty band lining. Repair as required. |
| | (g) Worn or faulty front and/or rear clutch. | (g) Disassemble and inspect clutch. Repair or replace as required. |
| **DELAYED ENGAGEMENT IN D, 1, 2 AND R** | (a) Low fluid level. | (a) Refill to correct level with Automatic Transmission Fluid, AQ-ATF, Suffix A. |
| | (b) Incorrect gearshift control linkage adjustment. | (b) Adjust the control linkage. |
| | (c) Oil filter clogged. | (c) Replace the oil filter. |
| | (d) Hydraulic pressures too high or low. | (d) Perform the hydraulic pressure tests and adjust to specifications. |
| | (e) Valve body malfunction or leakage. | (e) Perform pressure tests to determine cause and correct as required. |
| | (f) Accumulator sticking, broken rings or spring. | (f) Inspect the accumulator for sticking, broken rings or spring. Repair as required. |
| | (g) Clutches or servos sticking or not operating. | (g) Remove the valve body assembly and perform air pressure tests. Repair as required. |
| | (h) Faulty oil pump. | (h) Perform the hydraulic pressure tests. Adjust or repair as required. |
| | (i) Worn or faulty front and/or rear clutch. | (i) Disassemble and inspect clutch. Repair or replace as required. |
| | (j) Worn or broken input shaft and/or reaction shaft support seal rings. | (j) Inspect and replace seal rings as required, also inspect respective bores for wear. Replace the parts as required. |
| | (k) Aerated fluid. | (k) Inspect for air leakage into the oil pump suction passages. |

MyMopar.com

| Condition | Possible Cause | Correction |
|---|---|---|
| **RUNAWAY OR HARSH UPSHIFT AND 3-2 KICKDOWN** | (a) Low fluid level. | (a) Refill to correct level with Automatic Transmission Fluid, AQ-ATF, Suffix A. |
| | (b) Incorrect throttle linkage adjustment. | (b) Adjust the throttle linkage. |
| | (c) Hydraulic pressures too high or low. | (c) Perform the hydraulic pressure tests and adjust to specifications. |
| | (d) Kickdown band out of adjustment. | (d) Adjust the kickdown band. |
| | (e) Valve body malfunction or leakage. | (e) Perform pressure tests to determine cause and correct as required. |
| | (f) Governor malfunction. | (f) Inspect the governor and repair as required. |
| | (g) Accumulator sticking, broken rings or spring. | (g) Inspect the accumulator for sticking, broken rings or spring. Repair as required. |
| | (h) Clutches or servos sticking or not operating. | (h) Remove the valve body assembly and perform the air pressure tests. Repair as required. |
| | (i) Kickdown servo, band or linkage malfunctions. | (i) Inspect the servo for sticking, broken seal rings, binding linkage or faulty band lining. Repair as required. |
| | (j) Worn or faulty front clutch. | (j) Disassemble and inspect the clutch. Repair or replace as required. |
| | (k) Worn or broken input shaft and/or reaction shaft support seal rings. | (k) Inspect and replace seal rings as required, also inspect the respective bores for wear. Replace parts as required. |
| **NO UPSHIFT** | (a) Low fluid level. | (a) Refill to correct level with Automatic Transmission Fluid AQ-ATF, Suffix A. |
| | (b) Incorrect throttle linkage adjustment. | (b) Adjust the throttle linkage. |
| | (c) Kickdown band out of adjustment. | (c) Adjust the kickdown band. |
| | (d) Hydraulic pressures too high or low. | (d) Perform the hydraulic pressure tests and adjust to specifications. |
| | (e) Governor sticking. | (e) Remove and clean the governor. Replace parts if necessary. |
| | (f) Valve body malfunction or leakage. | (f) Perform pressure tests to determine cause and correct as required. |
| | (g) Accumulator sticking, broken rings or spring. | (g) Inspect accumulator for sticking, broken rings or spring. Repair as required. |
| | (h) Clutches or servos sticking or not operating. | (h) Remove the valve body assembly and perform the air pressure tests. Repair as required. |
| | (i) Faulty oil pump. | (i) Perform the hydraulic pressure tests, adjust or repair as required. |
| | (j) Kickdown servo, band or linkage malfunction. | (j) Inspect the servo for sticking, broken seal rings, binding linkage or faulty band lining. Repair as required. |
| | (k) Worn or faulty front clutch. | (k) Disassemble and inspect clutch. Repair or replace as required. |
| | (l) Worn or broken input shaft and/or reaction shaft support seal rings. | (l) Inspect and replace the seal rings as required, also inspect the respective bores for wear. Replace parts as required. |
| **NO KICKDOWN OR NORMAL DOWNSHIFT** | (a) Incorrect throttle linkage adjustment. | (a) Adjust the throttle linkage. |
| | (b) Incorrect gearshift control linkage adjustment. | (b) Adjust the control linkage. |
| | (c) Kickdown band out of adjustment. | (c) Adjust the kickdown band. |
| | (d) Hydraulic pressures too high or low. | (d) Perform the hydraulic pressure tests and adjust to specifications. |
| | (e) Governor sticking. | (e) Remove and clean the governor. Replace parts if necessary. |
| | (f) Valve body malfunction or leakage. | (f) Perform pressure tests to determine cause and correct as required. |

MyMopar.com

| Condition | Possible Cause | Correction |
|---|---|---|
| | (g) Accumulator sticking, broken rings or spring. | (g) Inspect the accumulator for sticking, broken rings or spring. Repair as required. |
| | (h) Clutches or servos sticking or not operating. | (h) Remove the valve body assembly and perform the air pressure tests. Repair as required. |
| | (i) Kickdown servo, band or linkage malfunction. | (i) Inspect the servo for sticking, broken seal rings, binding linkage or faulty band lining. Repair as required. |
| | (j) Overrunning clutch not holding. | (j) Disassemble the transmission and repair the overrunning clutch as required. |
| **SHIFTS ERRATIC** | (a) Low fluid level. | (a) Refill to the correct level with Automatic Transmission Fluid, AQ-ATF, Suffix A. |
| | (b) Aerated fluid. | (b) Inspect for air leakage into the oil pump suction passages. |
| | (c) Incorrect throttle linkage adjustment. | (c) Adjust the throttle linkage. |
| | (d) Incorrect gearshift control linkage adjustment. | (d) Adjust the control linkage. |
| | (e) Hydraulic pressures too high or low. | (e) Perform the hydraulic pressure tests and adjust to specifications. |
| | (f) Governor sticking. | (f) Remove and clean the governor. Replace parts if necessary. |
| | (g) Oil filter clogged. | (g) Replace the oil filter. |
| | (h) Valve body malfunction or leakage. | (h) Perform pressure tests to determine cause and correct as required. |
| | (i) Clutches or servos sticking or not operating. | (i) Remove the valve body assembly and perform air pressure tests. Repair as required. |
| | (j) Faulty oil pump. | (j) Perform the hydraulic pressure tests, adjust or repair as required. |
| | (k) Worn or broken input shaft and/or reaction shaft support seal rings. | (k) Inspect and replace the seal rings as required, also inspect respective bores for wear. Replace the parts as required. |
| **SLIPS IN FORWARD DRIVE POSITIONS** | (a) Low fluid level. | (a) Refill to the correct level with Automatic Transmission Fluid, AQ-ATF, Suffix A. |
| | (b) Aerated fluid. | (b) Inspect for air leakage into the oil pump suction passages. |
| | (c) Incorrect throttle linkage adjustment. | (c) Adjust the throttle linkage. |
| | (d) Incorrect gearshift control linkage adjustment. | (d) Adjust the control linkage. |
| | (e) Hydraulic pressures too low. | (e) Perform the hydraulic pressure tests and adjust to specifications. |
| | (f) Valve body malfunction or leakage. | (f) Perform pressure tests to determine cause and correct as required. |
| | (g) Accumulator sticking, broken rings or spring. | (g) Inspect the accumulator for sticking, broken rings or spring. Repair as required. |
| | (h) Clutches or servos sticking or not operating. | (h) Remove the valve body assembly and perform air pressure tests. Repair as required. |
| | (i) Worn or faulty front and/or rear clutch. | (i) Disassemble and inspect clutch. Repair or replace as required. |
| | (j) Overrunning clutch not holding. | (j) Disassemble the transmission and repair the overrunning clutch as required. |
| | (k) Worn or broken input shaft and/or reaction shaft support seal rings. | (k) Inspect and replace the seal rings as required, also inspect the respective bores for wear. Replace parts as required. |

MyMopar.com

| Condition | Possible Cause | Correction |
|---|---|---|
| **SLIPS IN REVERSE ONLY** | (a) Low fluid level. | (a) Refill to correct level with Automatic Transmission Fluid, AQ-ATF, Suffix A. |
| | (b) Aerated fluid. | (b) Inspect for air leakage into oil pump suction passages. |
| | (c) Incorrect gearshift control linkage adjustment. | (c) Adjust the control linkage. |
| | (d) Hydraulic pressures too high or low. | (d) Perform the hydraulic pressure tests and adjust to specifications. |
| | (e) Low-reverse band out of adjustment. | (e) Adjust the low-reverse band. |
| | (f) Valve body malfunction or leakage. | (f) Perform pressure tests to determine cause and correct as required. |
| | (g) Front clutch or rear servo, sticking or not operating. | (g) Remove the valve body assembly and perform air pressure tests. Repair as required. |
| | (h) Low-reverse servo, band or linkage malfunction. | (h) Inspect the servo for damaged seals, binding linkage or faulty band lining. Repair as required. |
| | (i) Faulty oil pump. | (i) Perform the hydraulic pressure tests, adjust or repair as required. |
| **SLIPS IN ALL POSITIONS** | (a) Low fluid level. | (a) Refill to the correct level with Automatic Transmission Fluid, AQ-ATF, Suffix A. |
| | (b) Hydraulic pressures too low. | (b) Perform the hydraulic pressure tests and adjust to specifications. |
| | (c) Valve body malfunction or leakage. | (c) Perform pressure tests to determine cause and correct as required. |
| | (d) Faulty oil pump. | (d) Perform the hydraulic pressure tests, adjust or repair as required. |
| | (e) Clutches or servos sticking or not operating. | (e) Remove the valve body assembly and perform air pressure tests. Repair as required. |
| | (f) Worn or broken input shaft and/or reaction shaft support seal rings. | (f) Inspect and replace the seal rings as required, also inspect respective bores for wear. Replace the parts as required. |
| **NO DRIVE IN ANY POSITION** | (a) Low fluid level. | (a) Refill to the correct level with Automatic Transmission Fluid, AQ-ATF, Suffix A. |
| | (b) Hydraulic pressures too low. | (b) Perform the hydraulic pressure tests and adjust to specifications. |
| | (c) Oil filter clogged. | (c) Replace the oil filter. |
| | (d) Valve body malfunction or leakage. | (d) Perform pressure tests to determine cause and correct as required. |
| | (e) Faulty oil pump. | (e) Perform the hydraulic pressure tests, adjust or repair as required. |
| | (f) Clutches or servos sticking or not operating. | (f) Remove the valve body assembly and perform air pressure tests. Repair as required. |
| **NO DRIVE IN FORWARD DRIVE POSITIONS** | (a) Hydraulic pressures too low. | (a) Perform the hydraulic pressure tests and adjust to specifications. |
| | (b) Valve body malfunction or leakage. | (b) Perform pressure tests to determine cause and correct as required. |
| | (c) Accumulator sticking, broken rings or spring. | (c) Inspect the accumulator for sticking, broken rings or spring. Repair as required. |
| | (d) Clutches or servos, sticking or not operating. | (d) Remove the valve body assembly and perform air pressure tests. Repair as required. |
| | (e) Worn or faulty rear clutch. | (e) Disassemble and inspect clutch. Repair or replace as required. |

MyMopar.com

| Condition | Possible Cause | Correction |
|---|---|---|
| | (f) Overrunning clutch not holding. | (f) Disassemble the transmission and repair overrunning clutch as required. |
| | (g) Worn or broken input shaft and/or reaction shaft support seal rings. | (g) Inspect and replace the seal rings as required, also inspect the respective bores for wear. Replace parts as required. |
| **NO DRIVE IN REVERSE** | (a) Incorrect gearshift control linkage adjustment. | (a) Adjust the control linkage. |
| | (b) Hydraulic pressures too low. | (b) Perform the hydraulic pressure tests and adjust to specifications. |
| | (c) Low-reverse band out of adjustment. | (c) Adjust the low-reverse band. |
| | (d) Valve body malfunction or leakage. | (d) Perform pressure tests to determine cause and correct as required. |
| | (e) Front clutch or rear servo, sticking or not operating. | (e) Remove the valve body assembly and perform air pressure tests. Repair as required. |
| | (f) Low-reverse servo, band or linkage malfunction. | (f) Inspect the servo for damaged seals, binding linkage or faulty band lining. Repair as required. |
| | (g) Worn or faulty front clutch. | (g) Disassemble and inspect clutch. Repair or replace as required. |
| **DRIVES IN NEUTRAL** | (a) Incorrect gearshift control linkage adjustment. | (a) Adjust the control linkage. |
| | (b) Valve body malfunction or leakage. | (b) Perform pressure tests to determine cause and correct as required. |
| | (c) Rear clutch inoperative. | (c) Inspect the clutch and repair as required. |
| **DRAGS OR LOCKS** | (a) Kickdown band out of adjustment. | (a) Adjust the kickdown band. |
| | (b) Low-reverse band out of adjustment. | (b) Adjust the low-reverse band. |
| | (c) Kickdown and/or low-reverse servo, band, linkage malfunction. | (c) Inspect the servo for sticking, broken seal rings, binding linkage or faulty band lining. Repair as required. |
| | (d) Front and/or rear clutch faulty. | (d) Disassemble and inspect clutch. Repair or replace as required. |
| | (e) Planetary gear sets broken or seized. | (e) Inspect the condition of the planetary gear sets and replaced as required. |
| | (f) Overrunning clutch worn, broken or seized. | (f) Inspect the condition of the overrunning clutch and replace parts as required. |
| **GRATING, SCRAPING GROWLING NOISE** | (a) Kickdown band out of adjustment. | (a) Adjust the kickdown band. |
| | (b) Low-reverse band out of adjustment. | (b) Adjust the low-reverse band. |
| | (c) Output shaft bearing and/or bushing damaged. | (c) Remove the extension housing and replace the bearing and/or bushing. |
| | (d) Governor support binding or broken seal rings. | (d) Inspect the condition of the governor support and repair as required. |
| | (e) Oil pump scored or binding. | (e) Inspect the condition of the pump and repair as required. |
| | (f) Front and/or rear clutch faulty. | (f) Disassemble and inspect clutch. Repair or replace as required. |
| | (g) Planetary gear sets broken or seized. | (g) Inspect the condition of the planetary gear sets and replace as required. |
| | (h) Overrunning clutch worn, broken or seized. | (h) Inspect the condition of overrunning clutch and replace parts as required. |
| **BUZZING NOISE** | (a) Low fluid level. | (a) Refill to the correct level with Automatic Transmission Fluid, AQ-ATF, Suffix A. |
| | (b) Pump sucking air. | (b) Inspect the pump for nicks or burrs on mating surfaces, porous casting, and/or excessive rotor clearance. Replace the parts as required. |

MyMopar.com

| Condition | Possible Cause | Correction |
|---|---|---|
| | (c) Valve body malfunction. | (c) Remove and recondition the valve body assembly. |
| | (d) Overrunning clutch inner race damaged. | (d) Inspect and repair the clutch as required. |
| **HARD TO FILL, OIL FLOWS OUT FILLER TUBE** | (a) High fluid level. | (a) Drain the fluid to the correct level. |
| | (b) Breather clogged. | (b) Inspect and clean breather vent opening in oil pump housing. |
| | (c) Oil filter clogged. | (c) Replace the oil filter. |
| | (d) Aerated fluid. | (d) Inspect for air leakage into oil pump suction passages. |
| **TRANSMISSION OVERHEATS** | (a) Low fluid level. | (a) Refill to the correct level with Automatic Transmission Fluid, AQ-ATF, Suffix A. |
| | (b) Kickdown band adjustment too tight. | (b) Adjust the kickdown band. |
| | (c) Low-reverse band adjustment too tight. | (c) Adjust the low-reverse band. |
| | (d) Faulty cooling system. | (d) Inspect the transmission cooling system, clean and repair as required. |
| | (e) Cracked or restricted oil cooler line or fitting. | (e) Inspect, repair or replace as required. |
| | (f) Faulty oil pump. | (f) Inspect the oil pump for incorrect clearance, repair as required. |
| | (g) Insufficient clutch plate clearance in front and/or rear clutches. | (g) Measure the clutch plate clearance and correct with the proper size snap ring. |
| **STARTER WILL NOT ENERGIZE IN NEUTRAL OR PARK** | (a) Incorrect gearshift control linkage adjustment. | (a) Adjust the control linkage. |
| | (b) Faulty or incorrectly adjusted neutral starting switch. | (b) Test the operation of the switch with a test lamp. Adjust or replace as required. |
| | (c) Broken lead to neutral switch. | (c) Inspect the lead and test with a test lamp. Repair the broken lead. |

# SERVICE PROCEDURES

## SERVICE IN VEHICLE

Various transmission components can be removed for repairs without removing the transmission from the vehicle. The removal, reconditioning and installation procedures for these components are covered here, except the valve body reconditioning, which is described on Page 73.

**IMPORTANT: All transmissions have the sliding spline type output shaft. Whenever the propeller shaft front sliding yoke is removed from the transmission, it should be cleaned and relubricated as outlined in Group "O" of this Manual.**

## ALUMINUM THREAD REPAIR

Damaged or worn threads in the aluminum transmission case and valve body can be repaired by the use of Heli-Coils. Essentially, this repair consists of drilling out the worn or damaged threads, tapping the hole with a special Heli-Coil Tap, and installing a Heli-Coil insert into the tapped hole. This brings the hole back to its original thread size.

The chart lists the threaded hole sizes which are used in the aluminum case and valve body, and the necessary tools and inserts for the repair of damaged or worn threads. Heli-Coil tools and inserts are readily available from most automotive parts jobbers.

**NOTE: Some thread drag may occur in screwing a bolt into the installed Heli-Coil insert. Therefore, a torque reading should be taken of the thread drag with an inch-pound torque wrench and added to the specified bolt torque, so that all bolts securing a particular part will be tightened to the same torque.**

## LUBRICATION

The transmission fluid and filter should provide satisfactory lubrication and protection to the automatic transmission and no change is recommended in vehicles used in normal service. Regularly scheduled fluid and filter changes, therefore will not be required, except when the operation of the vehicle is classified as severe.

### *Fluid Level*

Inspect fluid level every six months with engine and transmission at normal operating temperature. Refer to "Lubrication and Maintenance," Group O. The transmission should not be idled in gear for

MyMopar.com

## HELI-COIL CHART

| HELI-COIL INSERT | | | DRILL | TAP | INSERTING TOOL | EXTRACTING TOOL |
|---|---|---|---|---|---|---|
| Thread Size | Part No. | Insert Length | Size | Part No. | Part No. | Part No. |
| 10-24 | 1185-3 | .285″ | 13/64″ (.203″) | 3 CPB | 528-3N | 1227-6 |
| ¼-20 | 1185-4 | ⅜″ | 17/64″ (.265″) | 4 CPB | 528-4N | 1227-6 |
| 5/16-18 | 1185-5 | 15/32″ | Q (.332″) | 5 CPB | 528-5N | 1227-6 |
| ⅜-16 | 1185-6 | 9/16″ | X (.397″) | 6 CPB | 528-6N | 1227-6 |
| 7/16-14 | 1185-7 | 21/32″ | 29/32″ (.453″) | 7 CPB | 528-7N | 1227-16 |

long periods.

### *Trailer Towing Service and Hard Usage*

If vehicle is used for trailer towing or is used in hard or severe service, more frequent servicing is required as outlined.

Drain and refill transmission and replace filter initially at 36,000 miles or 3 years and every 12,000 miles or 12 months thereafter.

### *Drain and Refill*

(1) Raise vehicle on a hoist. Place a drain container with a large opening, under transmission oil pan.

(2) Loosen pan bolts at one corner, tap the pan to break it loose allowing fluid to drain, then remove the oil pan.

(3) Remove access plate from in front of converter, remove drain plug allowing fluid to drain (Fig. 3). Install and tighten converter drain plug to 14 foot-pounds, and install the access plate.

(4) If necessary, adjust the reverse band (Refer to page 55).

(5) Install a new filter on bottom of the valve body, and tighten retaining screws to 28 inch-pounds.

(6) Clean the oil pan, and reinstall using a new gasket. Tighten oil pan bolts to 150 inch-pounds.

(7) **A-904-G and A-904-LA:** Pour five quarts of Automatic Transmission Fluid AQ-ATF Suffix "A" through the filler tube.

**A-727-A and B:** Pour eight quarts of Automatic Transmission Suffix "A" through the filler tube.

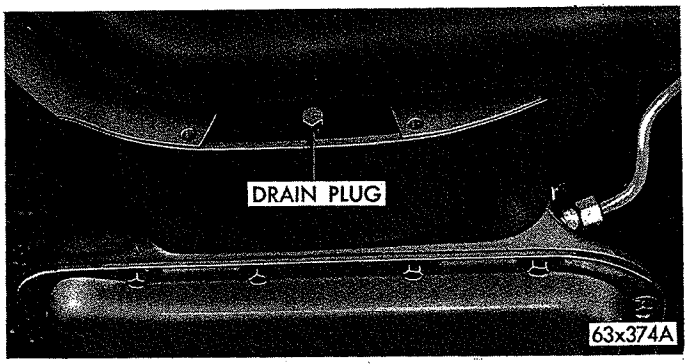


*Fig. 3—Converter Drain Plug*

(8) Start engine and allow to idle for at least two minutes. Then, with parking brake on, move selector lever momentarily to each position, ending in the **neutral** position.

(9) Add sufficient fluid to bring level to the **"ADD ONE PINT"** mark.

Recheck fluid level after transmission is at normal operating temperature. The level should be between the **"FULL"** mark and **"ADD ONE PINT"** mark (Fig. 4).

**CAUTION: To prevent dirt from entering transmission, make certain that dip stick cap is fully seated onto the filler tube.**

### *Periodic Adjustments*

The following adjustments should be performed at 36,000 mile intervals or more frequent under abnormal operating conditions.

(1) Adjust the kickdown band (Refer to Page 55).

(2) Adjust gearshift linkage (Refer to Page 53 or 54).

(3) Adjust engine idle in neutral. Refer to "Fuel System," Group 14.

(4) Adjust transmission and carburetor throttle linkage to obtain proper shift pattern (Refer to Page 56).

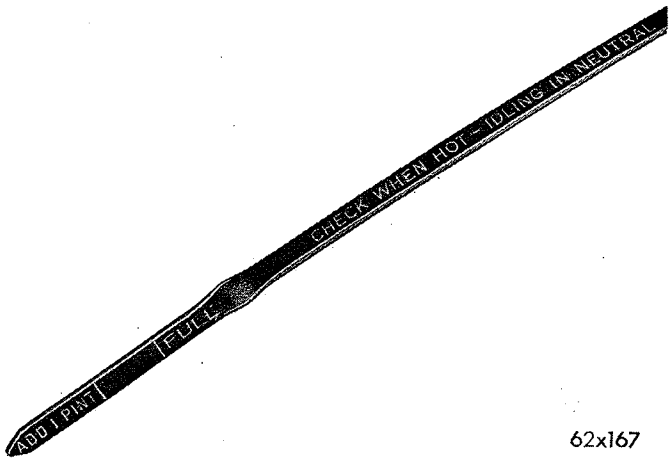


*Fig. 4—Dip Stick Markings*

MyMopar.com

## STEERING COLUMN AND GEARSHIFT

### *Removal*

(1) Disconnect negative (ground) cable from battery.

(2) Disconnect shift linkage rod from lever at lower end of steering column.

(3) Drive roll pin out of lower end of steering shaft to worm shaft coupling.

**Fury Models:** Remove heat shield from lower end of steering column. Drive roll pin out of steering shaft to upper joint coupling.

(4) Disconnect turn signal, gearshift indicator light and horn wires.

(5) Depress horn ring or horn ring ornament and rotate ¼ turn counterclockwise to remove.

(6) Disconnect horn wire at horn switch. Remove three screws and insulators, then remove horn ring and switch.

(7) Remove steering wheel retaining nut and washer. Remove steering wheel, using Tool C-3428A. Remove turn signal lever.

(8) Remove floor plate to floor pan attaching screws. Remove finish plate from under instrument panel to expose steering column bracket and clamp.

**CAUTION: On Fury models, be sure to disconnect gearshift indicator link before removing steering column to instrument panel clamp.**

(9) **Valiant and Belvedere Models:** Remove steering column to instrument panel retaining clamp and screws.

**Fury Models:** Remove screw that attaches gearshift indicator link (slotted end) to operating lever on the column. Remove steering column to instrument panel retaining clamp and screws.

### *Disassembly*

(1) Remove snap ring from upper end of steering shaft (Fig. 5).

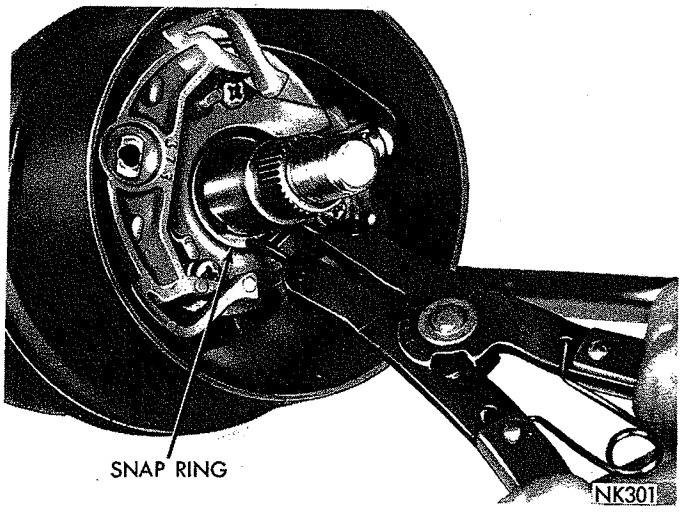


*Fig. 5—Removing or Installing Steering Shaft Snap Ring*

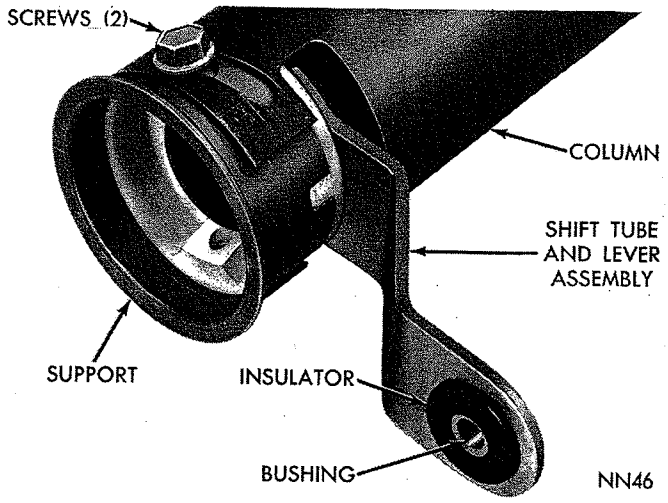


*Fig. 6—Steering Column—Lower End*

(2) **Valiant and Belvedere Models:** Disengage column jacket lower seal from lip on jacket and slide it down toward coupling. Tap steering shaft downward through upper column bearing and remove shaft from the column.

**Fury Models:** Tap steering shaft downward through upper column bearing, then remove shaft and lower bearing from the column.

(3) Remove two screws securing gearshift tube lever support in lower end of column (Fig. 6). Remove the support.

(4) Remove back-up lamp switch (Fig. 7). Lift washer off switch operating lever, then unsnap lever from gearshift tube.

**Fury Models:** Loosen locking nut on gearshift indicator operating lever, then slide lever out of slot in gearshift tube (Fig. 8).

(5) Support gearshift housing on a small socket, drive out roll pin and remove gearshift lever (Fig. 9).

(6) Remove turn signal switch retainer from bearing housing and lift switch upward out of the way (Fig. 10 or 11). Remove four screws from inside bear-

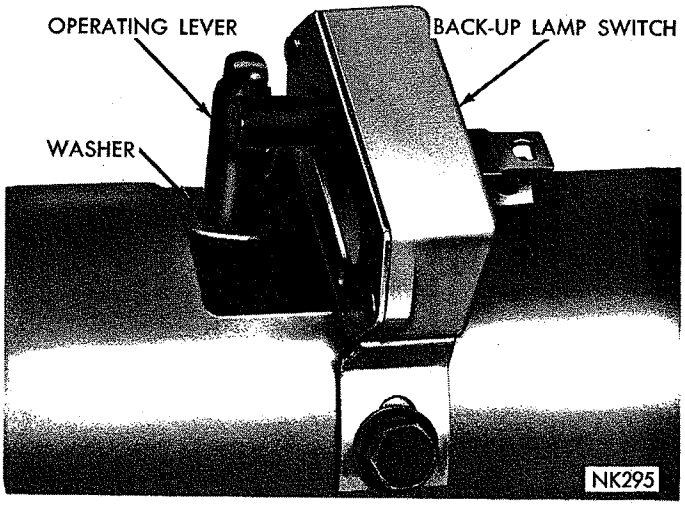


*Fig. 7—Back-up Lamp Switch and Operating Lever*

MyMopar.com

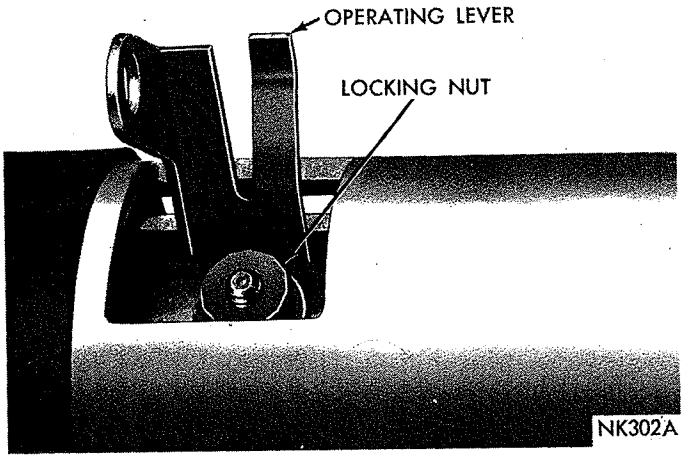


***Fig. 8—Gearshift Indicator Operating Lever (Fury Models)***

ing housing to separate it from shift lever gate. Slide gate out of column jacket. If necessary, tap column bearing out of the bearing housing.

(7) Rotate gearshift housing to align opening with the lock screw (Fig. 12). Remove lock screw with an allen wrench, then carefully pull gearshift tube out of column jacket. If necessary, remove shift lever crossover spring load parts (Figs. 13 or 14).

(8) Remove floor plate assembly from the column jacket.

### Inspection

After cleaning, inspect all parts for wear or damage. Note condition of bushing assembly in lower shift lever, shift lever gate and inner end of shift lever. Replace parts as required.

Inspect steering shaft bearings for smooth operation, and lubricate with Multi-Purpose Chassis Lubricant or similar lubricant. If bearing has any signs of roughness or wear, it should be replaced. Replacement bearings are pre-lubricated.

### Assembly

(1) Lubricate floor plate 0-ring with a soap solution

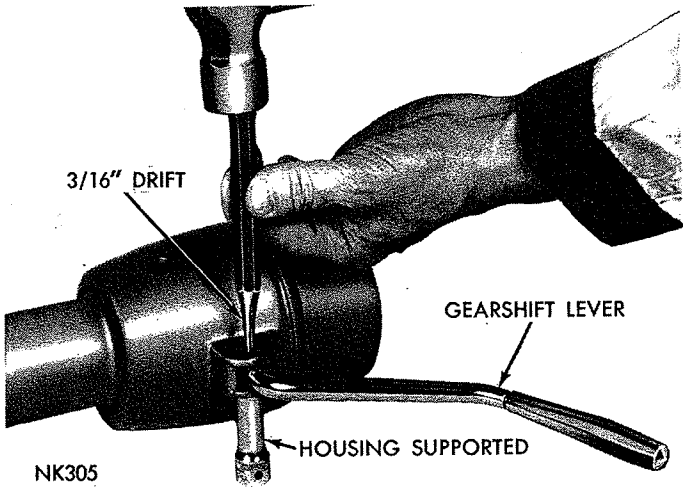


***Fig. 9—Removing or Installing Gearshift Lever***

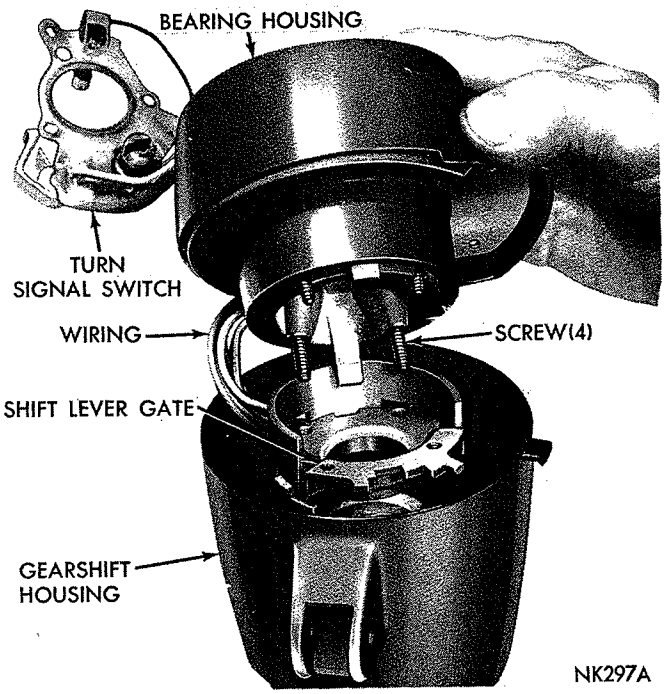


***Fig. 10—Disassembling or Assembling Upper End of Column (Valiant and Belvedere Models)***

or rubber lubricant and slide assembly on the steering column.

The floor plate assembly must be installed before installing shift tube and lever, since this cannot be done after shift tube and lever are in place in the steering column.

(2) Install shift lever crossover spring load parts in gearshift housing (Fig. 13 or 14). Be sure all parts

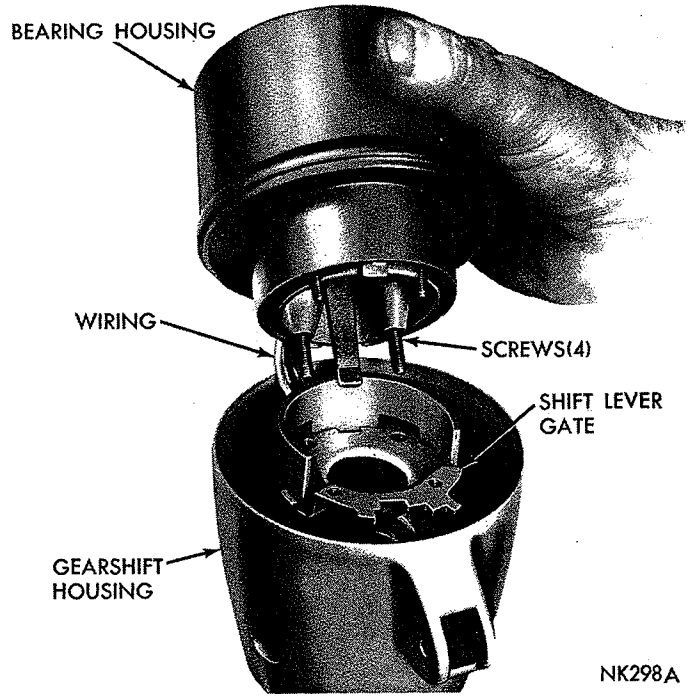


***Fig. 11—Disassembling or Assembling Upper End of Column (Fury Models)***

MyMopar.com

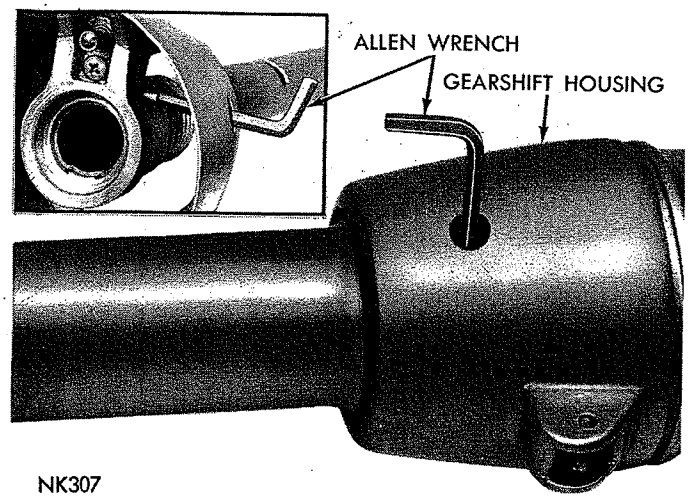


***Fig. 12—Removing or Installing Gearshift Tube Lock Screw***

move freely in the bore, then install retaining screw.

(3) Install column upper bearing in bearing housing; make sure bearing is fully seated in the housing.

(4) With column jacket held upright, place gearshift and bearing housings on the jacket. Thread turn signal switch, horn and indicator lamp wires through the two housings, down into column jacket and out through proper opening on side of the jacket.

(5) Raise bearing housing and slide shift lever gate into upper end of the column jacket (Fig. 10 or 11). Place the four retaining screws in the bearing housing (note screw lengths Fig. 10 or 11). Lower bearing housing and progressively thread screws into shift lever gate, then tighten screws securely.

(6) Slide spacer and felt washer on the gearshift tube. Insert gearshift tube into the column. Align upper end of tube with gearshift housing and push tube firmly into the housing.

(7) Install gearshift tube lever support in lower end of column and start the two retaining screws (Fig. 6). Rotate support just enough to eliminate shift tube end play, then tighten screws to 30 inch-pounds.

(8) Rotate gearshift housing to align it so lock screw can be installed with an allen wrench (Fig. 12). Tighten the screw securely.

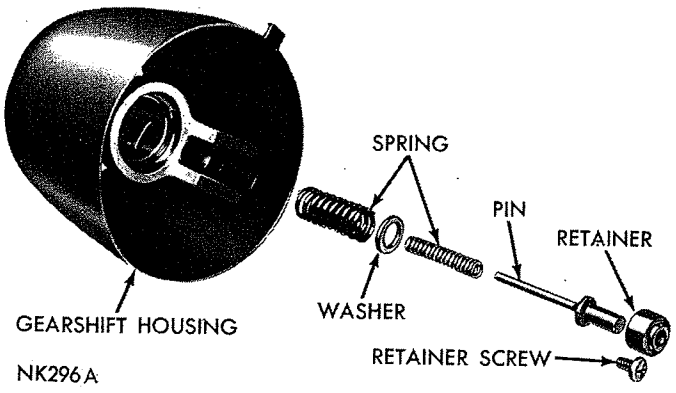


***Fig. 13—Gearshift Housing—Disassembled (Valiant and Belvedere Models)***

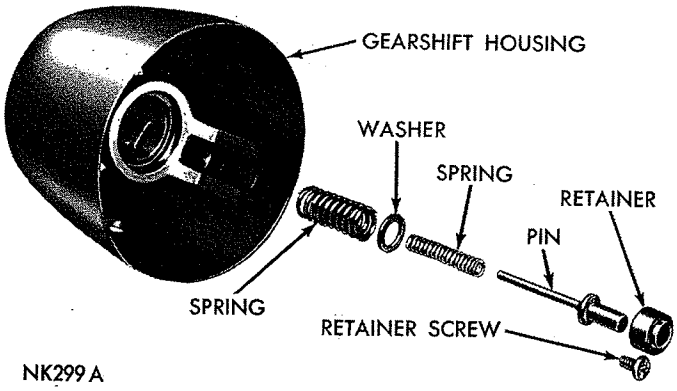


***Fig. 14—Gearshift Housing—Disassembled (Fury Models)***

(9) With gearshift housing in NEUTRAL position, insert gearshift lever. Support gearshift housing (Fig. 9) while driving shift lever roll pin into place.

(10) **Valiant and Belvedere Models:** Position turn signal switch in bearing housing, install switch retainer plate, dial lamp and secure with three screws (Fig. 15). Guide dial pointer over dial, then snap base of pointer on lug provided on gearshift housing.

(11) Place gearshift lever in NEUTRAL position and snap back-up lamp switch operating lever on lug provided on gearshift tube, slide washer down over lever to lock it in place (Fig. 7). Install and adjust switch so actuator arm is snug against operating lever, then tighten switch retaining screws.

(12) **Valiant and Belvedere Models:** Slide column jacket lower seal off the steering shaft. Fill the cavity in seal between the two nylon bushings with short fiber wheel bearing lubricant. Reinstall seal on shaft

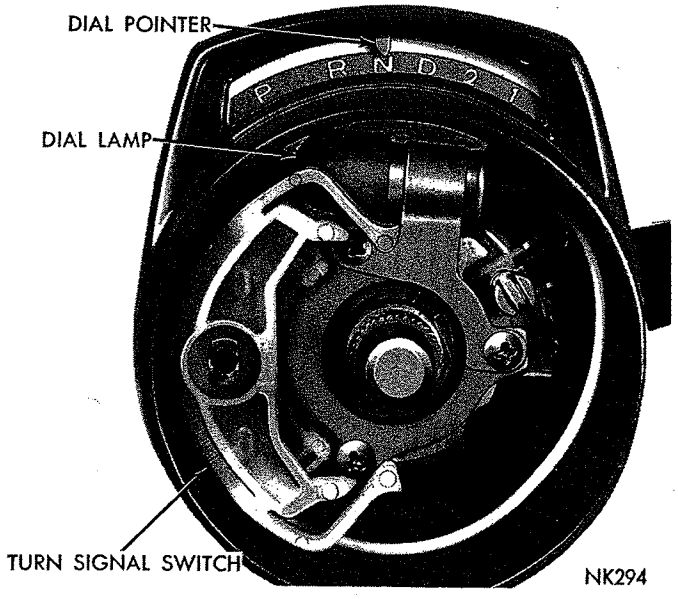


***Fig. 15—Turn Signal Switch and Gearshift Indicator (Valiant and Belvedere Models)***

MyMopar.com

and slide assembly in the column. Tap the shaft through upper bearing and install retaining snap ring (Fig. 5). Engage seal over lip on lower end of column jacket.

(13) **Fury Models:** Position turn signal switch in bearing housing, install switch retainer plate and secure with three screws.

(14) **Fury Models:** Place gearshift lever in NEUTRAL position. Slide gearshift indicator operating lever into slot provided in gearshift tube (Fig. 8), then tighten locking nut. Slide steering shaft and lower bearing assembly in the column. Tap shaft through upper bearing, then install snap ring (Fig. 5).

### *Installation*

(1) Insert column assembly through floor pan opening, being careful not to damage paint or headlining.

(2) **Valiant and Belvedere Models:** With master splines on worm shaft and coupling aligned, engage coupling with the worm shaft.

Loosely fasten steering column to instrument panel bracket with the clamp and screws. Be sure tab on clamp is entered in locating slot in the column jacket. Tap coupling down into place on worm shaft, then install a **new** roll pin.

(3) **Fury Models:** With master splines on upper joint coupling and steering shaft aligned, insert shaft into the coupling.

Loosely fasten steering column to instrument panel bracket with the clamp and screws. Be sure tab on clamp is entered in locating slot in the column jacket. Align roll pin grooves in coupling and steering shaft, then install a **new** roll pin. Install heat shield on lower end of column jacket.

(4) The steering shaft coupling must be centered at midpoint of its travel.

**Valiant and Belvedere Models:** Move column assembly up or down in instrument panel bracket so dimension between top of coupling and center of gauge hole (Fig. 16) is 13/16 inch. Tighten steering column bracket clamp screws securely.

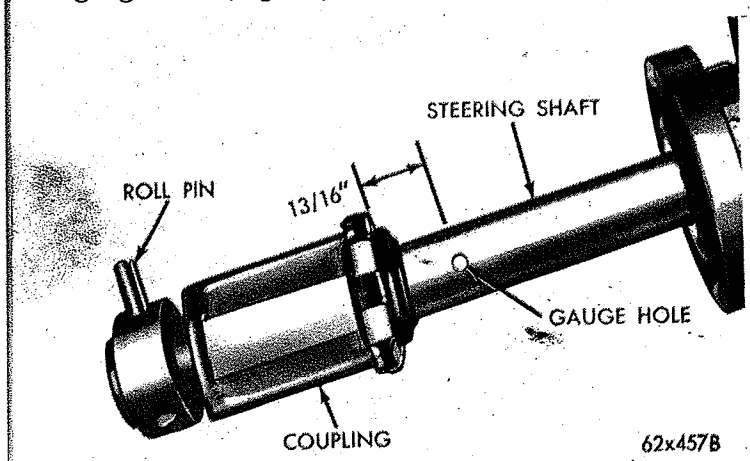


***Fig. 16—Positioning Steering Shaft Coupling (Valiant and Belvedere Models)***

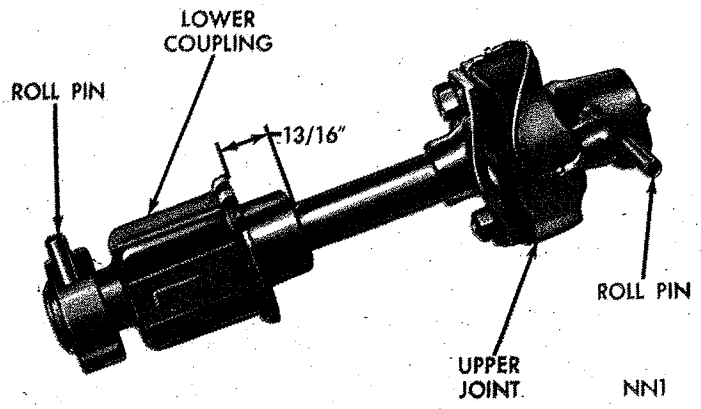


***Fig. 17—Positioning Steering Shaft Coupling (Fury Models)***

**Fury Models:** Move column assembly up or down in instrument panel bracket so dimension between top of the coupling and center of gauge hole (Fig. 17) is 13/16 inch. Tighten steering column bracket clamp screws securely.

(5) **Fury Models:** Connect gearshift indicator link (slotted end) to operating lever on the column with screw in its approximate original location. Slowly move gearshift lever from "l" (low) to "P" (park) pausing briefly at each selector position. The indicator pointer must travel and align with each selector position in a positive manner without hesitation. If necessary, loosen screw and readjust link to align the pointer correctly.

(6) Attach finish plate to bottom of the instrument panel. Align and attach floor plate to the floor pan. Install turn signal lever.

(7) With master splines in steering wheel hub and steering shaft aligned, place steering wheel on the steering shaft. Install retaining nut and washer, tighten nut to 24 foot-pounds.

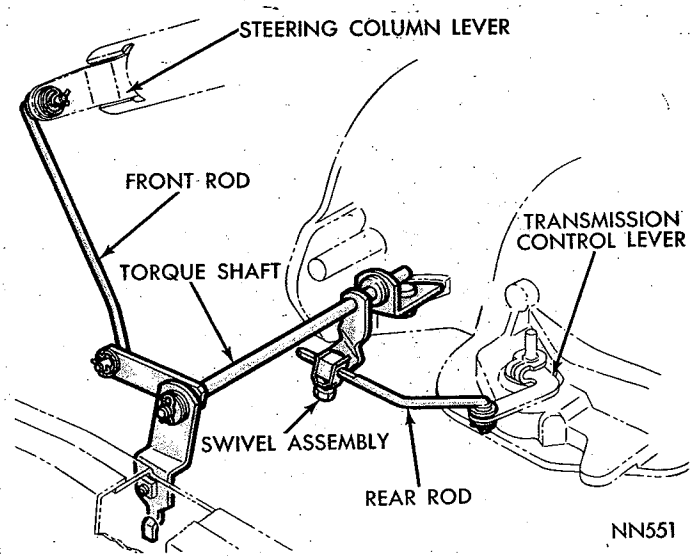


***Fig. 18—Gearshift Linkage***

MyMopar.com

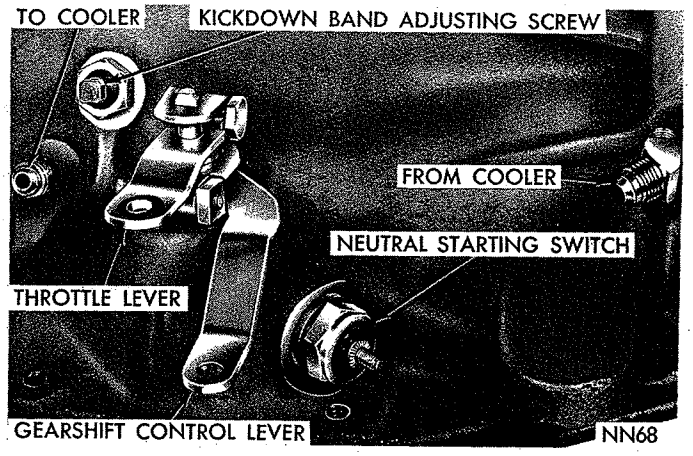


***Fig. 19—External Controls and Adjustments***

(8) Install any horn switch parts previously removed from steering wheel, install the horn ring or horn ring ornament.

(9) Connect turn signal, gearshift indicator light and horn wires. Connect battery ground cable, test operation of the lights and horns.

(10) Connect and adjust the gearshift linkage rod.

### *Linkage Adjustment*

(1) Place gearshift selector lever in **PARK** position and loosen control rod swivel clamp screw a few turns (Fig. 18).

(2) Move transmission control lever (Fig. 19), all the way to rear (in park detent).

(3) With control lever on transmission in park position detent and selector lever in **PARK** position, tighten swivel clamp screw securely.

## CONSOLE GEARSHIFT

### *Removal*

(1) Disconnect negative (ground) cable from the battery.

(2) Remove gearshift handle knob set screw with an allen wrench (Fig. 20). Unscrew knob from cable, then remove spring and handle.

(3) **Belvedere and Fury Models:** Remove two screws "A" from rear end of upper finish plate (Fig. 21). Raise rear end of plate and work it rearward to disengage from front of console. Remove console retaining screws and bolts, raise console enough to disconnect dial lamp and other electrical connections, then lift off console assembly.

**Valiant Models:** Remove two screws from front corners of console (Fig. 22). Raise console lid and remove two screws from bottom of tray. Raise console enough to disconnect dial lamp and other electrical connections, then lift off console assembly.

(4) Disconnect back-up lamp switch wires (Fig. 20).

(5) Disconnect upper rod from gearshift unit (Fig. 23 or 24). Remove four gearshift to floor bracket bolts and remove unit.

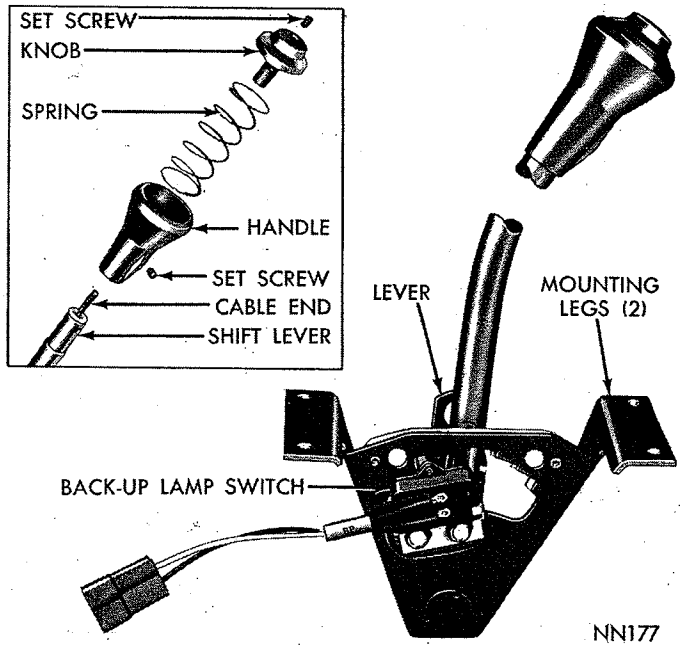


***Fig. 20—Console Gearshift Unit***

### *Installation*

(1) Install gearshift unit in its bracket, install and tighten four retaining bolts securely (Fig. 23 or 24). Attach upper rod to the unit and connect back-up lamp switch wires.

(2) Lower console down over shift lever, insert dial lamp in its housing, and connect all electrical connections.

(3) Position console over floor brackets and install retaining screws and bolts. Install upper finish plate.

(4) Install gearshift handle and spring, secure handle to lever with set screw (Fig. 20). With lever in **NEUTRAL,** install knob by threading it on cable end

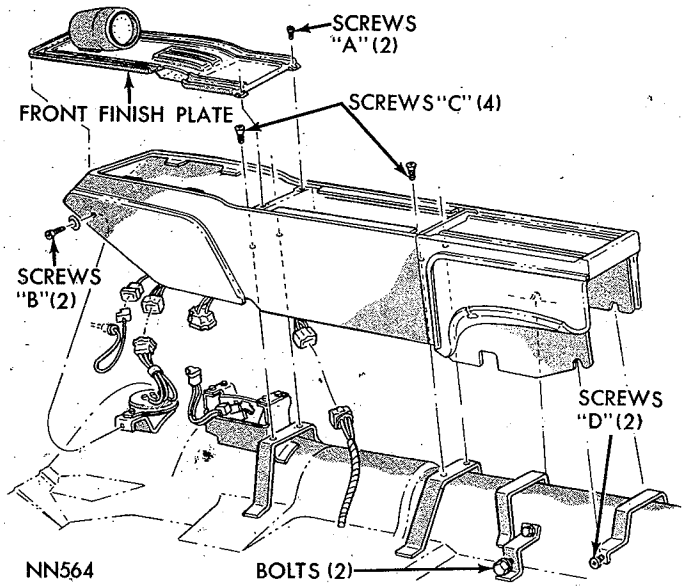


***Fig. 21—Removing or Installing Console (Belvedere and Fury Models)***

MyMopar.com

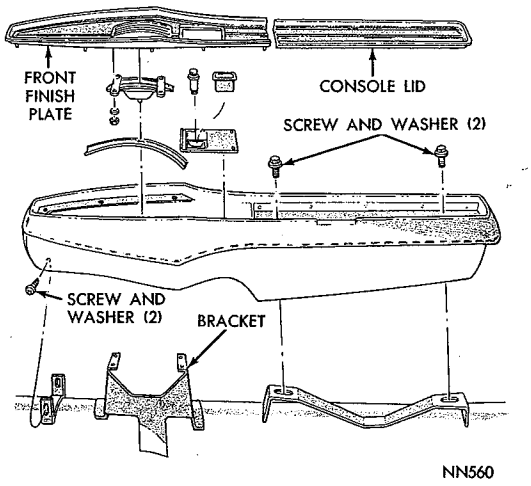


*Fig. 22—Removing or Installing Console (Valiant Models)*

until serrated surface on knob is approximately 1/32 inch above top of handle. Secure knob with set screw.

### *Linkage Adjustment*

(1) **Belvedere and Fury Models:** Place gearshift selector lever in **PARK** position and loosen lower rod swivel clamp screw a few turns (Fig. 23).

**Valiant Models:** With gearshift selector lever in **PARK** position, loosen bolt in lower rod adjusting lever (Fig. 24).

(2) Move transmission control lever (Fig. 19), all the way to rear (in park detent).

(3) With control lever on transmision in park position detent, and selector lever in **PARK** position, tighten swivel clamp screw or adjusting lever bolt securely.

(4) Connect battery ground cable.

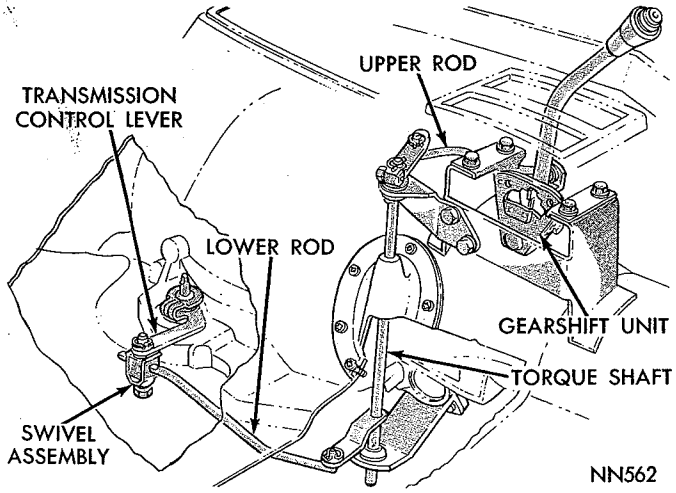


*Fig. 23—Console Gearshift Linkage (Belvedere and Fury Models)*

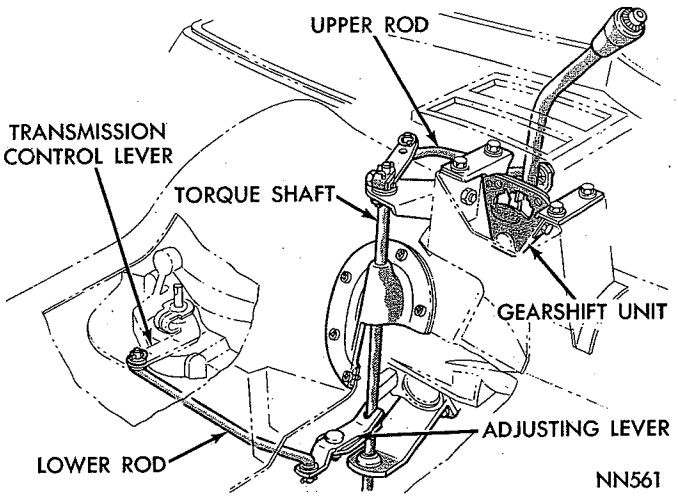


*Fig. 24—Console Gearshift Linkage (Valiant Models)*

## NEUTRAL STARTING SWITCH

### *Adjustment and Test*

The neutral starting switch (Fig. 25) should operate in both the PARK and NEUTRAL selector lever positions.

(1) To test switch, disconnect wire from the switch.

(2) Connect one lead of a test lamp to battery current and other lead to the switch terminal. If test lamp does not light, the switch may be faulty, out of adjustment, or gearshift linkage may be improperly adjusted.

(3) Unscrew switch from transmission case allowing fluid to drain into a container. Move selector lever to PARK and then to NEUTRAL positions, and inspect to see that the switch operating lever fingers are centered in switch opening in the case.

(4) Screw switch into transmission case and tighten to 25-35 foot-pounds. Retest switch with the test lamp.

(5) Add fluid to transmission to bring up to proper level. Refer to Page 47.

**NOTE: Test starter for operating in all selector lever**

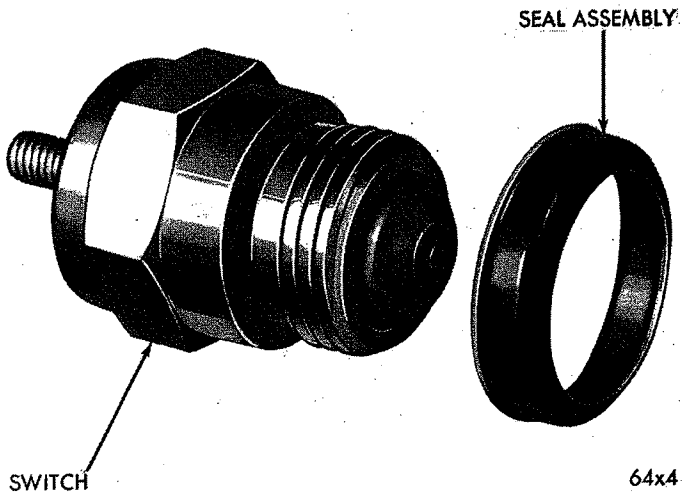


*Fig. 25—Neutral Starting Switch*

MyMopar.com

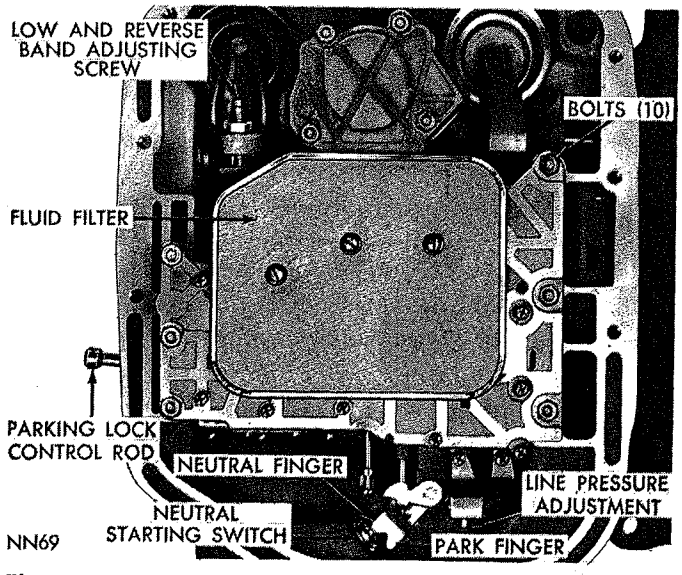


*Fig. 26—Bottom View of Transmission (Pan Removed)*

**positions. If it should operate in any position other than park and neutral, readjust the gearshift linkage. Refer to Page 53. In some cases, it may be necessary to align the valve body neutral and/or park fingers with the switch plunger. Refer to Page 67.**

## BAND ADJUSTMENTS

### *Kickdown Band*

The kickdown band adjusting screw is located on left side of the transmission case (Fig. 19).

(1) Loosen lock nut and back off approximately five turns. Test adjusting screw for free turning in the transmission case.

(2) Using wrench, Tool C-3380 with adapter C-3705, tighten band adjusting screw 47 to 50 inch-pounds. If adapter C-3705 is not used, tighten adjusting screw to 72 inch-pounds which is the true torque.

(3) **A-904-G and A-904-LA:** Back off adjusting screw 2 turns (225 and 273 cu. in. engines), and 2⅝ turns (170 cu. in. engine). Hold adjusting screw in this position and tighten lock nut to 25 foot-pounds.

**A-727-A and B:** Back off adjusting screw 2 turns. Hold adjusting screw in this position and tighten lock nut to 29 foot-pounds.

### *Low and Reverse Band*

(1) Raise vehicle, drain transmission fluid and remove the oil pan.

(2) Loosen adjusting screw lock nut and back off nut approximately five turns (Fig. 26). Test adjusting screw for free turning in the lever.

(3) Using wrench, Tool C-3380 with adapter C-3705, tighten band adjusting screw 47 to 50 inch-pounds. If adapter C-3705 is not used, tighten adjusting screw to 72 inch-pounds which is the true torque.

(4) **A-904-G and A-904-LA:** Back off adjusting screw 5¼ turns. Hold adjusting screw in this position and tighten lock nut to 20 foot-pounds.

**A-727-A and B:** Back off adjusting screw 3 turns. Hold adjusting screw in this position and tighten lock nut to 35 foot-pounds.

(5) Reinstall oil pan using a new gasket. Tighten oil pan bolts to 150 inch-pounds.

(6) Fill transmission with Automatic Transmission Fluid AQ-ATF, Suffix "A." Refer to Page 47.

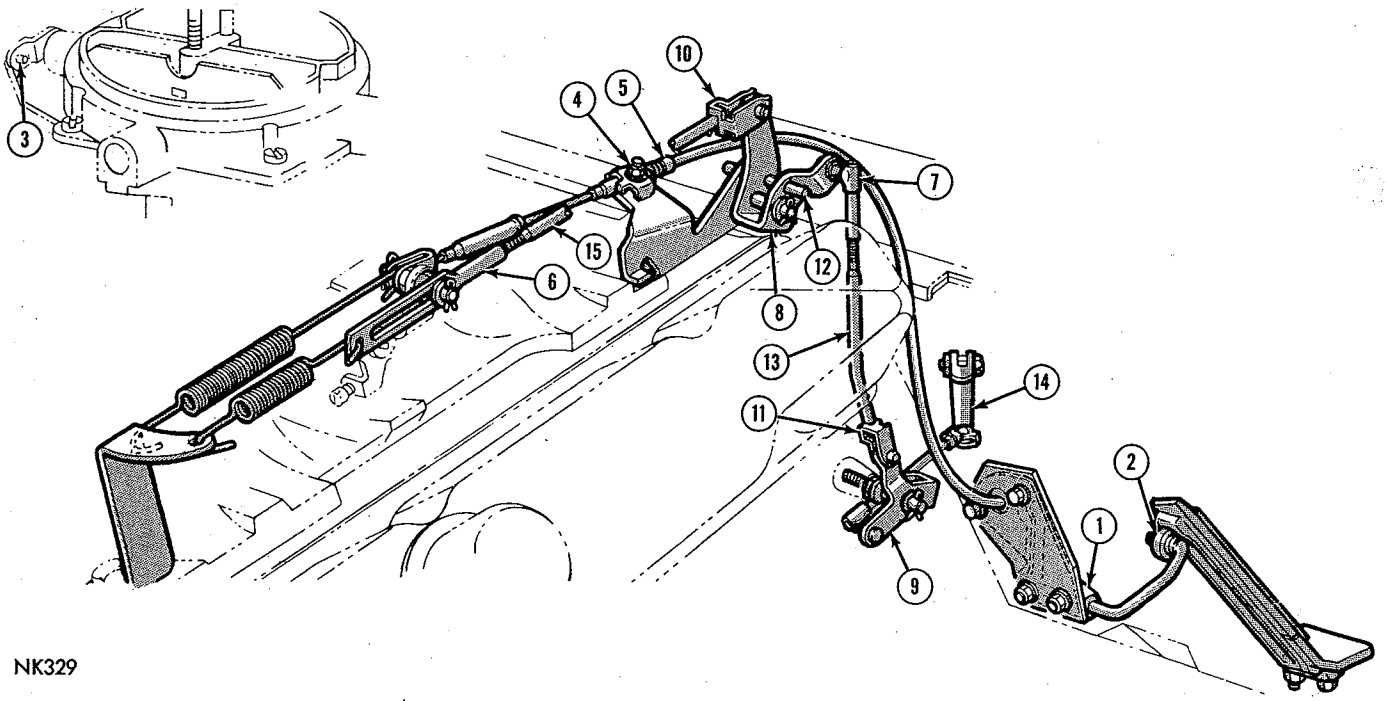


*Fig. 27—Throttle Linkage Adjustment (Belvedere with 318-361-383 or 426 Cu. In. Eng.) (Fury with 318-383 or 426 Cu. In. Eng.)*

MyMopar.com

## THROTTLE LINKAGE ADJUSTMENT

With engine at operating temperature and carburetor off fast idle cam, adjust idle speed of engine using a tachometer. Refer to "Fuel System" Group 14, for idle speed Specifications.

### *Automatic Transmission (Fig. 27) (Belvedere with 318-361-383 or 426 Cu. In. Eng.) (Fury with 318-383 or 426 Cu. In. Eng.)*

(1) Apply a thin film of multi-purpose grease on both ends of accelerator shaft [1] where it turns in the bracket, nylon roller [2] where it contacts the pedal, pivot points of both upper [8] and lower [9] transmission linkage bellcranks, also the clipped ends of transmission linkage rod bearing areas [10] [11].

(2) Disconnect return spring and slotted transmission rod [6] from carburetor lever pin. Disconnect transmission intermediate rod ball socket [7] from upper bellcrank ball end.

(3) Disconnect choke [3] at carburetor or block choke valve in full open position. Open throttle slightly to release fast idle cam, then return carburetor to curb idle.

(4) With a 3/16 inch diameter rod [12] placed in the holes provided in upper engine mounted bellcrank and lever [8], adjust length of intermediate transmission rod [13] by means of threaded adjustment at upper end. The ball socket [7] must line up with ball end with rod held upward against transmission stop [14].

(5) Assemble ball socket [7] to ball end and remove 3/16 inch rod [12] from upper bellcrank and lever.

(6) Hold carburetor rod [15] forward against transmission stop [14] and adjust its length by means of threaded adjustment so that rear end of slot in adjusting link [6] just contacts carburetor lever pin.

(7) Lengthen carburetor rod [15] two full turns by turning slotted link [6].

(8) Assemble slotted link [6] to the carburetor.

(9) Loosen cable clamp nut [4], then adjust position of cable housing ferrule [5] in the clamp so that all slack is removed from cable with carburetor at curb idle. To remove slack from cable, move ferrule [5] in the clamp in direction **away** from carburetor lever.

(10) Back off ferrule [5] ¼ inch. This provides ¼ inch cable slack at idle. Tighten cable clamp nut [4].

(11) Route cable so it does not interfere with the carburetor rod [15] or upper bellcrank [8] throughout full throttle linkage travel.

(12) Connect choke rod [3] or remove blocking fixture.

### *Manual Transmission (Fig. 27) (Belvedere with 318-361-383 or 426 Cu. In. Eng.) (Fury with 318-383 or 426 Cu. In. Eng.)*

(1) Apply a thin film of multi-purpose grease on both ends of accelerator shaft [1] where it turns in the bracket, and nylon roller [2] where it contacts pedal.

(2) Disconnect choke [3] at carburetor or block choke valve in full open position. Open throttle slightly to release fast idle cam, then return carburetor to curb idle.

(3) Loosen cable clamp nut [4], then adjust position of cable housing ferrule [5] in the clamp so slack is removed from cable with carburetor at curb idle. To remove slack from cable move ferrule [5] in the clamp in direction **away** from carburetor lever.

(4) Back off ferrule [5] ¼ inch. This provides ¼ inch cable slack at idle. Tighten cable clamp nut [4].

(5) Connect choke rod [3] or remove blocking fixture.

### *Automatic Transmission (Fig. 28) (Belvedere with 273 Cu. In. Eng.)*

(1) Apply a thin film of multi-purpose grease on both ends of accelerator shaft [1] where it turns in the bracket, and where it turns in roller [9], also pivot points of both upper [12] and lower [8] transmission linkage bellcranks.

(2) Disconnect return spring and slotted transmission rod [5] from carburetor lever pin. Disconnect transmission intermediate rod ball socket [6] from upper bellcrank ball end.

(3) Disconnect choke [2] at carburetor or block choke valve in full open position. Open-throttle slightly to release fast idle cam, then return carburetor to curb idle.

(4) With a 3/16 inch diameter rod [10] placed in the holes provided in upper engine mounted bellcrank [7] and lever, adjust length of intermediate transmission rod by means of threaded adjustment [6] at the upper end. The ball socket must line up with ball end with rod held **downward** against the transmission stop [11].

(5) Assemble ball socket [6] to ball end and remove 3/16 inch rod [10] from upper bellcrank and lever.

(6) Hold transmission lever [11] forward against its stop while adjusting length of carburetor rod [5]. While pushing rearward on rod [5] with slight effort, adjust its length by means of the threaded adjustment. Rear end of slot should contact carburetor lever pin without any forward force on pin when slotted rod is in its normal operating position against lever pin nut.

(7) Position slotted rod [5] on carburetor lever pin and secure with washer and pin. Connect return spring. Check freedom of operation by moving slotted rod [5] to full rearward position, then allow it to return slowly, making sure it returns to full forward position.

(8) Loosen cable clamp nut [3], then adjust position of cable housing ferrule [4] in the clamp so all slack is

MyMopar.com

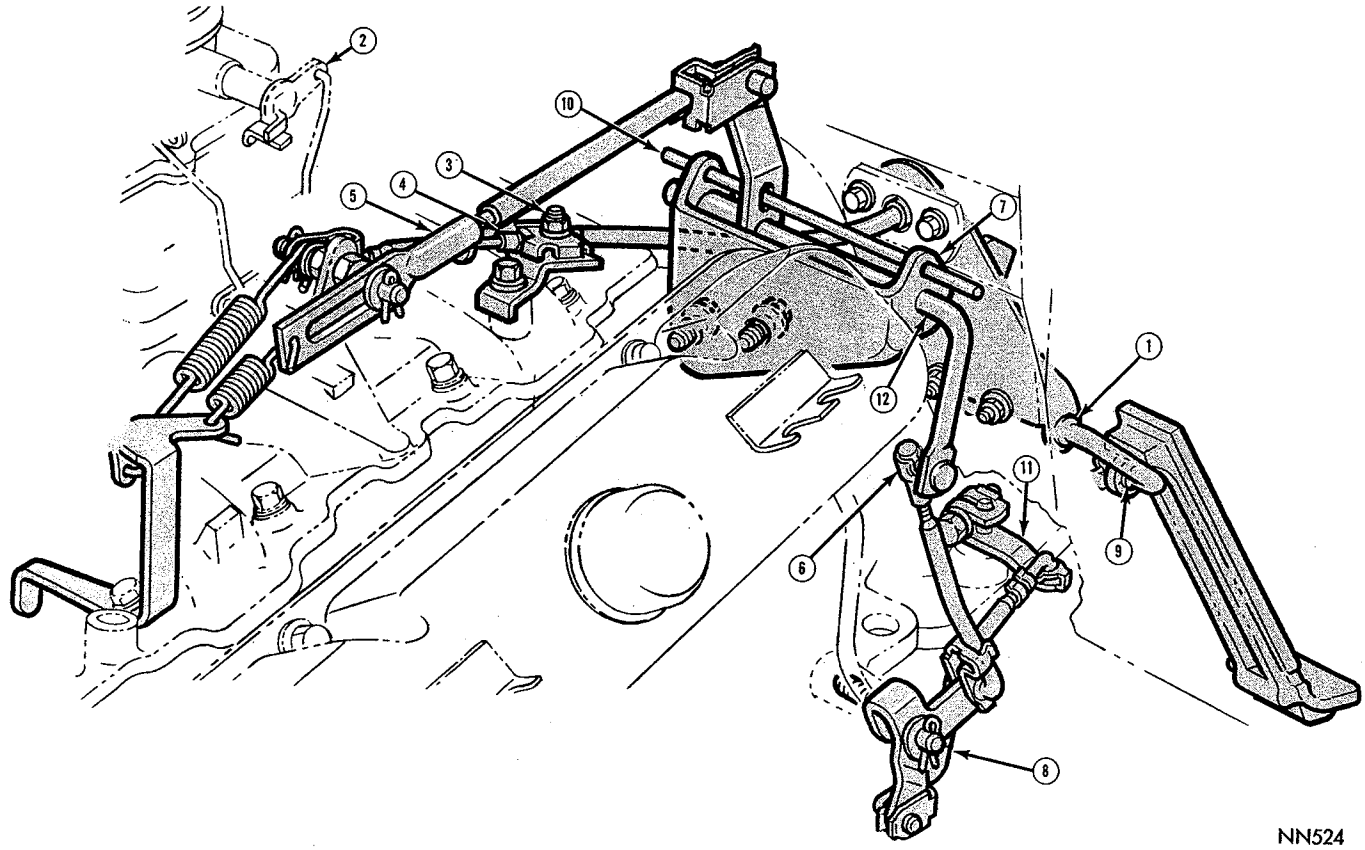


*Fig. 28—Throttle Linkage Adjustment (Belvedere with 273 Cu. In. Eng.)*

removed from cable with carburetor at curb idle. To remove slack from cable, move ferrule [4] in the clamp in direction **away** from carburetor lever.

(9) Back off ferrule [4] ¼ inch. This provides ¼ inch free play between front edge of accelerator shaft lever and the dash bracket. Tighten clamp nut [3].

(10) Route cable so it does not interfere with carburetor rod [5] or upper bellcrank [7] throughout full throttle linkage travel.

(11) Connect choke rod [2] or remove blocking fixture.

### *Manual Transmission (Fig. 28) (Belvedere with 273 Cu. In. Eng.)*

(1) Apply a thin film of multi-purpose grease on both ends of accelerator shaft [1] where it turns in the bracket, and where it turns in roller [9].

(2) Disconnect choke [2] at carburetor or block choke valve in full open position. Open throttle slightly to release fast idle cam, then return carburetor to curb idle.

(3) Loosen cable clamp nut [3], then adjust position of cable housing ferrule [4] in the clamp so all slack is removed from cable with carburetor at curb idle. To remove slack from cable, move ferrule [4] in the clamp in direction **away** from carburetor lever.

(4) Back off ferrule [4] ¼ inch. This provides ¼ inch free play between front edge of accelerator shaft lever and the dash bracket. Tighten cable clamp nut [3].

(5) Connect choke rod [2] or remove blocking fixture.

### *Automatic Transmission (Fig. 29) (Belvedere-Fury with 225 Cu. In. Eng.) (Valiant with 225 Cu. In. Eng. and A/C)*

(1) Apply a thin film of multi-purpose grease on both ends of accelerator shaft [1] where it turns in the bracket, nylon roller (8) where it contacts pedal, and the bellcrank pin [2].

(2) Disconnect return spring and slotted transmission rod [6] from bellcrank lever pin.

(3) Disconnect choke [3] at carburetor or block choke valve in full open position. Open throttle slightly to release fast idle cam, then return carburetor to curb idle.

(4) Hold transmission lever [7] forward against its stop (rod or lever must not be moved vertically while holding against stop) and adjust length of transmission rod by means of threaded adjustment [6] at the upper end. The rear end of slot should contact bellcrank lever pin without exerting any forward force.

(5) Lengthen rod by one full turn of the adjustment.

(6) Assemble slotted adjustment [6] to bellcrank lever pin and install washer and retainer pin. Assemble transmission linkage return spring in place. To check transmission linkage freedom of operation,

MyMopar.com

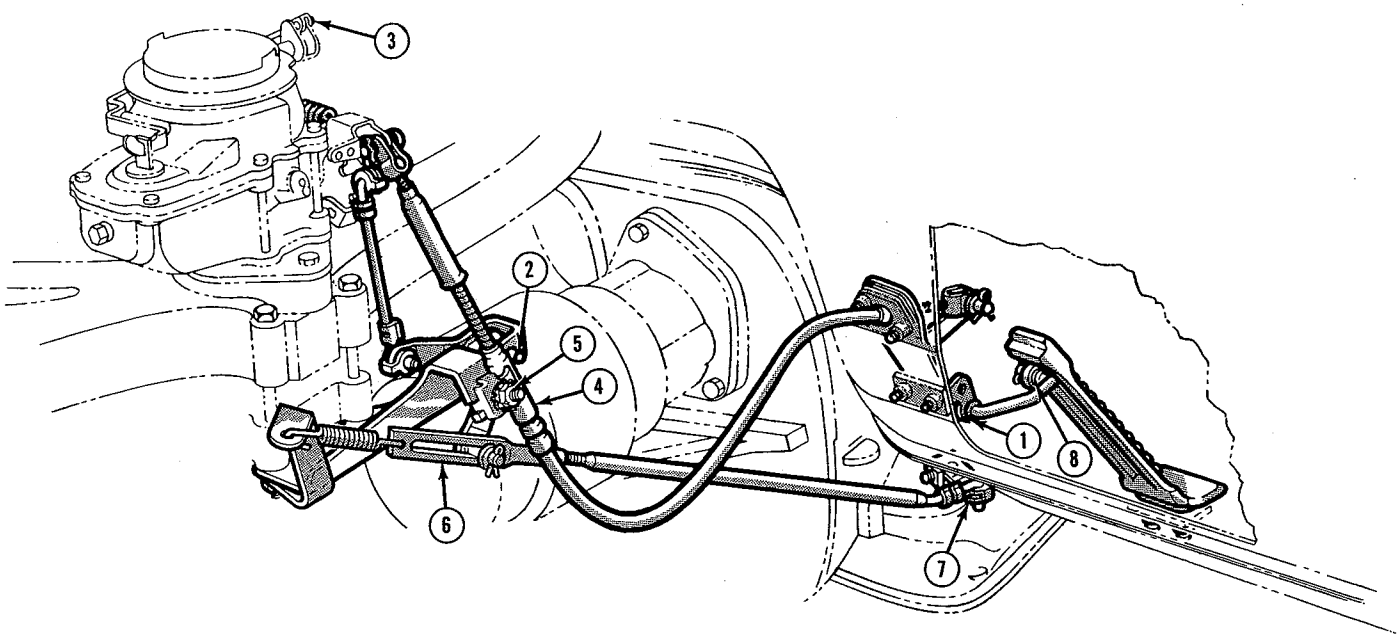


NK332

***Fig. 29—Throttle Linkage Adjustment (Belvedere-Fury with 225 Cu. In. Eng.) (Valiant with 225 Cu. In. Eng. and A/C)***

move slotted adjuster link [6] to full rearward position, then allow it to return slowly, making sure it returns to full forward position.

(7) Loosen cable clamp nut [5], then adjust position of cable housing ferrule [4] in the clamp so all slack is removed from cable with carburetor at curb idle. To remove slack from cable, move ferrule [4] in the clamp in direction **away** from carburetor lever.

(8) Back off ferrule [4] ¼ inch. This provides ¼ inch cable slack at idle. Tighten cable clamp nut [5].

(9) Route cable so that it does not interfere with the transmission rod throughout its full travel.

(10) Connect choke rod [3] or remove blocking fixture.

### *Manual Transmission (Fig. 29) (Belvedere-Fury with 225 Cu. In. Eng.) (Valiant with 225 Cu. In. Eng. and A/C)*

(1) Apply a thin film of multi-purpose grease on both ends of accelerator shaft [1] where it turns in the bracket, and nylon roller [8] where it contacts pedal.

(2) Disconnect choke [3] at carburetor or block choke valve in full open position. Open throttle slightly to release fast idle cam, then return carburetor to curb idle.

(3) Loosen cable clamp nut [5], then adjust position of cable housing ferrule [4] in the clamp so all slack is removed from cable with carburetor at curb idle. To remove slack from cable move ferrule [4] in the clamp in direction **away** from carburetor lever.

(4) Back off ferrule [4] ¼ inch. This provides ¼ inch cable slack at idle. Tighten cable clamp nut [5].

(5) Connect choke rod [3] or remove blocking fixture.

### *Automatic Transmisison (Fig. 30) (Valiant with 273 Cu. In. Eng.)*

(1) Apply a thin film of multi-purpose grease to both ends of accelerator shaft [3] where it turns in the bracket, and bottom side of pedal [4] where it contacts accelerator shaft lever. Also to pivot points of both upper [5] and lower [6] bellcranks, and clipped ends of transmission linkage rod bearing areas [14] [15] and [16].

(2) Disconnect return spring and carburetor rod ball socket [1] from carburetor or disconnect transmission intermediate rod ball socket [2] from upper bellcrank ball end.

(3) Disconnect choke [7] at carburetor or block choke valve in full open position. Open throttle slightly to release fast idle cam, then return carburetor to curb idle.

(4) Insert a 6 inch long 3/16 inch diameter rod [8] in the holes provided in upper engine mounted bellcrank [5] and lever, adjust length of intermediate transmission rod by means of threaded adjustment [9] at upper end. The ball socket must line up with ball end with rod held downward against transmission stop [10].

(5) Assemble ball socket [2] to ball end and remove 3/16 inch rod [8] from upper bellcrank [5] and lever.

(6) Hold carburetor rod [11] forward against transmission stop [10] and adjust its length by means of threaded adjustment [11] so ball socket [1] lines up with ball end of carburetor lever.

MyMopar.com

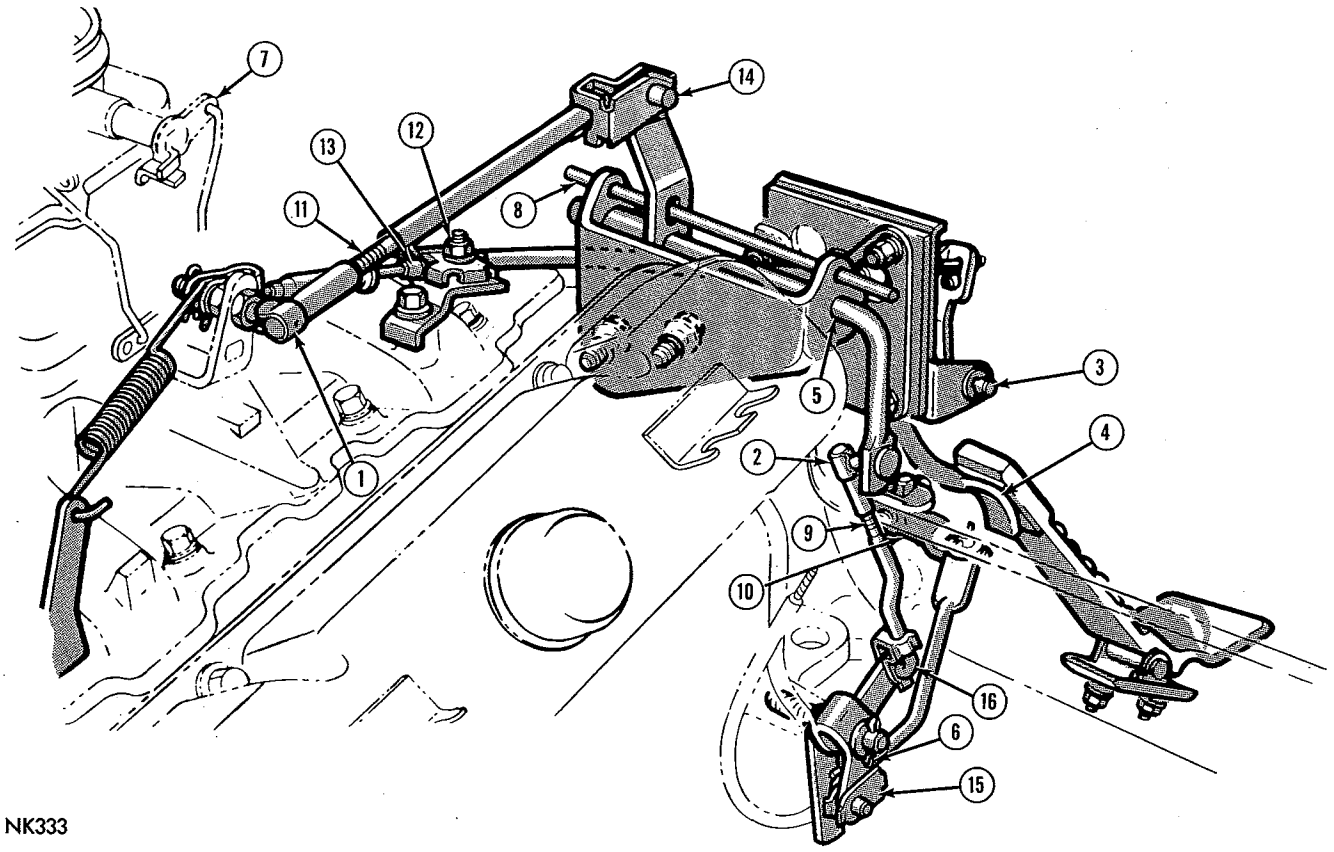


*Fig. 30—Throttle Linkage Adjustment (Valiant with 273 Cu. In. Eng.)*

(7) Lengthen carburetor rod four turns by turning ball socket [1] counterclockwise.

(8) Assemble ball socket [1] to ball end and connect return spring.

(9) Loosen cable clamp nut [12], then adjust position of cable housing ferrule [13] in the clamp so all slack is removed from cable with carburetor at curb idle. To remove slack from cable, move ferrule [13] in the clamp in direction **away** from carburetor lever.

(10) Back off ferrule [13] ¼ inch. This provides ¼ inch cable slack at idle. Tighten cable clamp nut [12].

(11) Route cable so that it does not interfere with transmission rod throughout its full travel.

(12) Connect choke rod [7] or remove blocking fixture.

### *Manual Transmission (Fig. 30). (Valiant with 273 Cu. In. Eng.)*

(1) Apply a thin film of multi-purpose grease to both ends of accelerator shaft [3] where it turns in the bracket, and bottom side of pedal [4] where it contacts accelerator shaft lever.

(2) Disconnect choke [7] at carburetor or block choke valve in full open position. Open throttle slightly to release fast idle cam, then return carburetor to curb idle.

(3) Loosen cable clamp nut [12], then adjust position of cable housing ferrule [13] in the clamp so all slack is removed from cable with carburetor at curb idle. To remove slack from cable, move ferrule [13] in the clamp in direction **away** from carburetor lever.

(4) Back off ferrule [13] ¼ inch. This provides ¼ inch cable slack at idle. Tighten cable clamp nut [12].

(5) Connect choke rod [7] or remove blocking fixture.

### *Automatic Transmission (Fig. 31). (Valiant with 170 or 225 Cu. In. Eng.)*

(1) Apply a thin film of multi-purpose grease on outside surface of carburetor lever isolator [1], and torque shaft plastic bushing [2], also torque shaft ball stud [3] and bellcrank pin [10].

(2) Disconnect transmission intermediate rod ball socket [5] from bellcrank ball end.

(3) Disconnect choke at carburetor [4] or block choke valve in full open position. Open throttle slightly to release fast idle cam, then return throttle to curb idle.

(4) Loosen lock nut [8] in transmission rod, insert a 3/16 inch diameter rod [7] approximately 4 inches long in the holes provided in transmission rod bellcrank bracket and lever assembly.

(5) Move transmission lever [9] forward against the stop and tighten transmission rod lock nut [8].

(6) Disconnect top end of accelerator pedal rod [6]. Adjust length of rod to provide a pedal angle of 111° to 113°. To increase pedal angle, increase length of rod by means of the screw adjustment. Reinstall top

MyMopar.com

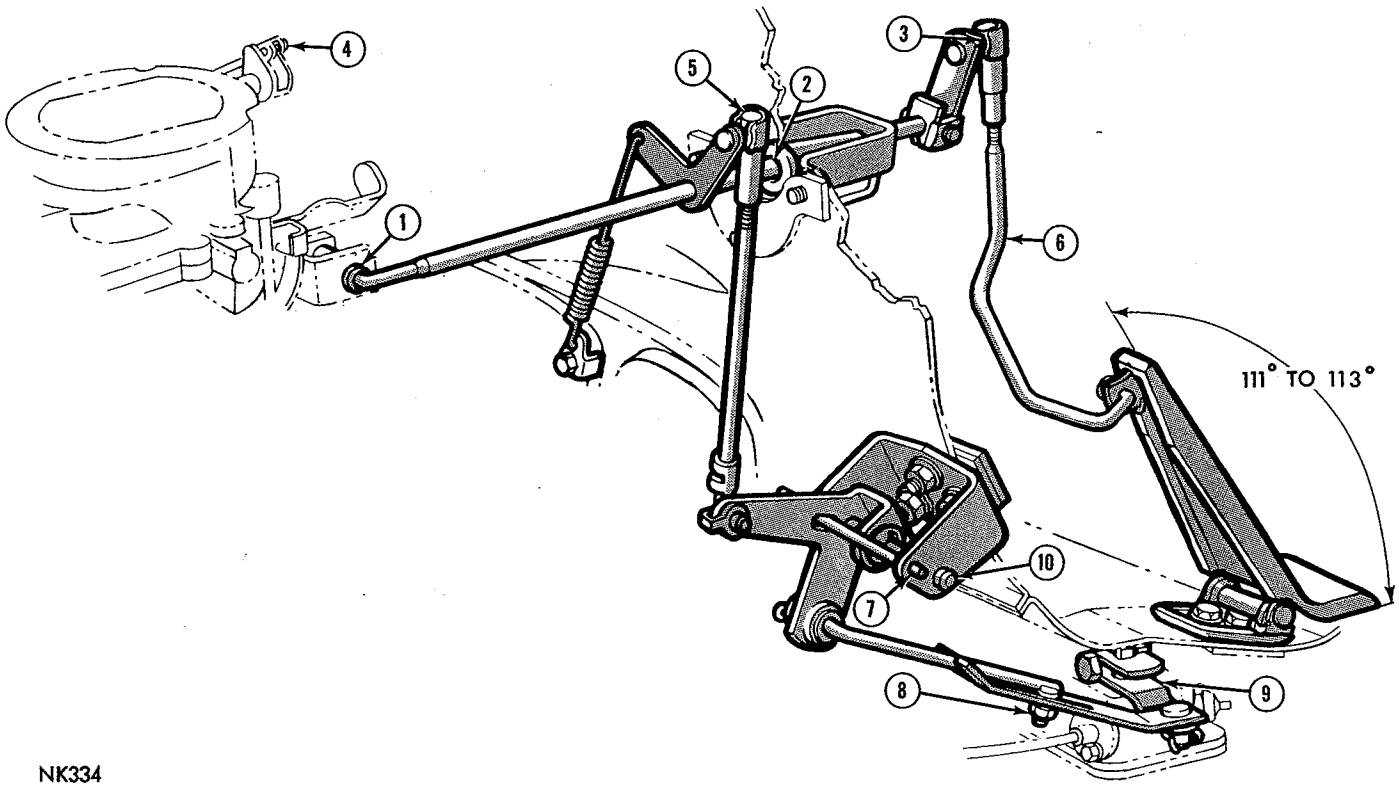


*Fig. 31—Throttle Linkage Adjustment (Valiant with 170 or 225 Cu. In. Eng.)*

end of the rod [6].

(7) Remove the 3/16 inch diameter rod [7] from transmission rod bracket and lever assembly. Adjust length of transmission bellcrank to torque shaft rod by means of screw adjustment at top end. The correct rod length allows ball socket to line up with ball end when rod is held upward against transmission stop.

(8) Install ball socket on torque shaft lever ball end [5].

(9) Connect choke rod [4] or remove blocking fixture.

### *Manual Transmission (Fig. 31) (Valiant with 170 or 225 Cu. In. Eng.)*

(1) Apply a thin film of multi-purpose grease on outside surface of carburetor lever isolator [1], and torque shaft plastic bushing [2], also torque shaft ball stud [3].

(2) Disconnect choke at carburetor [4] or block choke valve in full open position. Open throttle slightly to release fast idle cam, then return throttle to curb idle.

(3) Disconnect top end of accelerator pedal rod [6]. Adjust length of rod to provide a pedal angle of 111° to 113°. To increase pedal angle, increase length of rod by means of the screw adjustment. Reinstall top end of rod [6]. Connect choke [4] rod or remove blocking fixture.

## HYDRAULIC CONTROL PRESSURE TESTS

### *Line Pressure and Front Servo Release Pressure*

Line pressure and front servo release pressure tests must be made in D (drive) position with rear wheels free to turn. The transmission fluid must be at operating temperature (150 to 200°F).

(1) Install an engine tachometer, raise vehicle on a hoist and position tachometer so it can be read under the vehicle.

(2) Connect two 0-100 psi pressure gauges, Tool C-3292 to pressure take-off-points at side of accumulator and at front servo release (Fig. 32).

(3) With control in D (drive) position, speed up engine slightly until transmission shifts into direct. (Front servo release will be pressurized in direct.) Reduce engine speed slowly to 1,000 rpm. Line pressure at this time (1,000 rpm) must be 54-60 psi, and front servo release pressure must not be more than 3 psi below the line pressure.

(4) Disconnect throttle linkage from transmission throttle lever and move throttle lever gradually to the full throttle position. Line pressure must rise to a maximum of 90-96 psi just before or at kickdown into low gear. Front servo release pressure must follow line pressure up to kickdown point and should not be more than 3 psi below line pressure.

If pressure is not 54-60 psi at 1,000 rpm, adjust

MyMopar.com

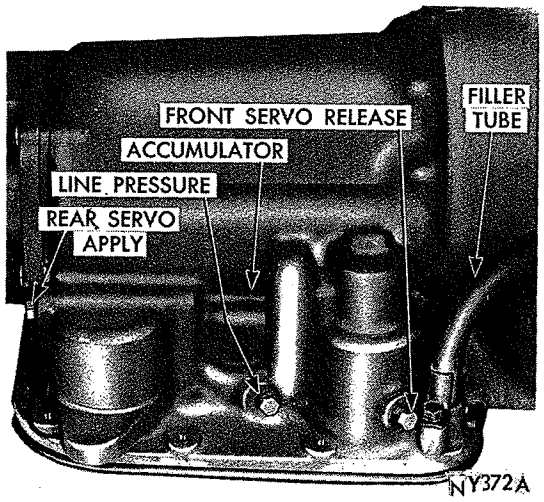


*Fig. 32—Pressure Test Locations (Right Side of Case)*

the pressure as outlined on Page 62.

If front servo release pressures are less than pressures specified and line pressures are within limits, there is excessive leakage in the front clutch and/or front servo circuits. **Always inspect external transmission throttle lever for looseness on the valve body shaft when making the pressure tests.**

### Lubrication Pressures

The lubrication pressure test should be made at same time that line pressure and front servo release pressure are tested.

(1) Install a "tee" fitting between cooler return line fitting and fitting hole in transmission case at rear left side of the transmission (Fig. 33). Connect a 0-100 psi pressure gauge, Tool C-3292 to the "tee" fitting.

(2) At 1,000 engine rpm, with throttle closed and transmission in direct, lubrication pressure should be 5-15 psi. Lubrication pressure will be approximately doubled as the throttle is opened to maximum line pressure.

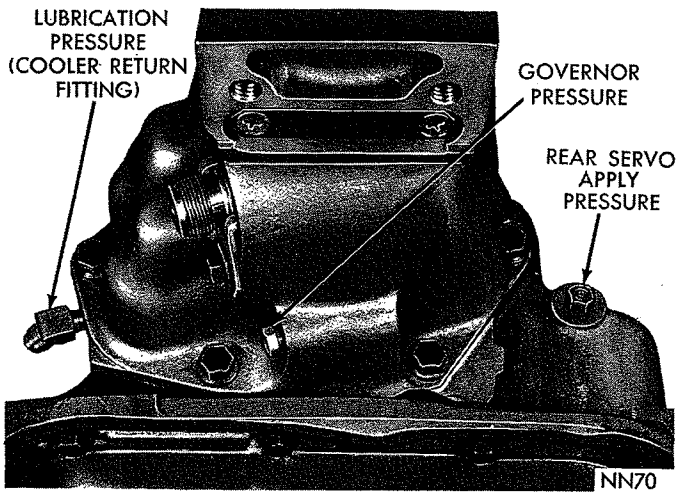


*Fig. 33—Pressure Test Locations (Rear End of Case)*

### Rear Servo Apply Pressure

(1) Connect a 0-300 psi pressure gauge, Tool C-3293 to apply pressure take-off point at rear servo (Fig. 33).

(2) With transmission control in R (reverse) position and engine speed set at 1600 rpm, reverse servo apply pressure should be 240-280 psi.

### Governor Pressure

(1) Connect a 0-100 psi pressure gauge, Tool C-3292 to governor pressure take-off point, located at lower left side of extension near the mounting flange (Fig. 33).

(2) Governor pressures should fall within the limits given in the "Governor Pressure Chart."

If governor pressures are incorrect at the given vehicle speeds, the governor valve and/or weights are probably sticking.

**NOTE: The governor pressure should respond smoothly to changes in mph and should return to 0 to 1½ psi when vehicle is stopped. High pressure at stand still (above 2 psi) will prevent the transmission from downshifting.**

### Throttle Pressure

No provisions are made to test the throttle pressure. Incorrect throttle pressure should only be suspected if part throttle shift speeds are either very delayed or occur too early in relation to vehicle speeds. In which case, the throttle linkage should be adjusted before throttle pressure setting is adjusted. Refer to Page 62.

## GOVERNOR PRESSURE CHART

*(Six Cylinder Vehicles)*

### VEHICLE SPEED TO AXLE RATIOS

| Valiant 6.50-13 | | Belvedere 6.95-14 | | Fury 7.35-14 | | PRESSURE LIMITS |
|---|---|---|---|---|---|---|
| 3.23:1 | 3.55:1 | 2.93:1 | 3.55:1 | 2.93:1 | 3.23:1 | PSI |
| 16-17 | 14-16 | 17-19 | 14-16 | 17-19 | 15-17 | .. 15 |
| 36-45 | 33-41 | 35-46 | 30-37 | 36-47 | 33-42 | .. 50 |
| 59-67 | 53-61 | 61-70 | 50-58 | 62-71 | 56-65 | .. 75 |

## GOVERNOR PRESSURE CHART

*(Eight Cylinder Vehicles)*

### VEHICLE SPEED TO AXLE RATIOS

| Valiant 7.00-13 | | Belvedere 7.35-14 | | Fury 7.75-14 | | PRESSURE LIMITS |
|---|---|---|---|---|---|---|
| 2.93:1 | 3.23:1 | 2.93:1 | 3.23:1 | 2.93:1 | 3.23:1 | PSI |
| 18-19 | 16-17 | 17-19 | 15-17 | 18-20 | 16-18 | .. 15 |
| 40-51 | 37-46 | 36-47 | 33-42 | 38-47 | 35-42 | .. 50 |
| 66-75 | 60-68 | 62-71 | 56-65 | 65-72 | 59-65 | .. 75 |

MyMopar.com

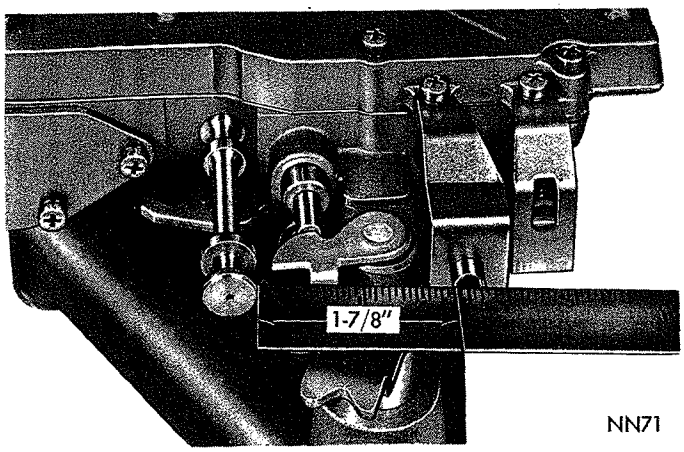


*Fig. 34—Measuring Spring Retainer Location*

## GOVERNOR PRESSURE CHART

### *(426 Cubic Inch Engine)*

### VEHICLE SPEED TO AXLE RATIOS

| 8.25-14 3.23:1 | 3.91:1 | PRESSURE LIMITS PSI |
|---|---|---|
| 16-18 | 13-15 | 15 |
| 46-52 | 38-43 | 50 |
| 68-74 | 56-61 | 75 |

## HYDRAULIC CONTROL PRESSURE ADJUSTMENTS

### *Line Pressure*

An incorrect throttle pressure setting will cause incorrect line pressure readings even though line pressure adjustment is correct. Always inspect and correct throttle pressure adjustment before adjusting the line pressure.

**NOTE: Before adjusting line pressure, measure distance between manual valve (valve in 1-low position) and line pressure adjusting screw (Fig. 34). This measurement must be 1⅞ inches; correct by loosening spring retainer screws and repositioning the spring retainer. The regulator valve may cock and hang up in its bore if spring retainer is out of position.**

If line pressure is not correct, it will be necessary to remove valve body assembly to perform the adjustment. Refer to Page 67.

The approximate adjustment is 1-5/16 inches, measured from valve body to inner edge of adjusting nut (Fig. 35). However, due to manufacturing tolerances, the adjustment can be varied to obtain specified line pressure.

The adjusting screw may be turned with an Allen wrench. One complete turn of adjusting screw changes closed throttle line pressure approximately 1-2/3 psi. Turning adjusting screw counter-clockwise increases pressure, and clockwise decreases pressure.

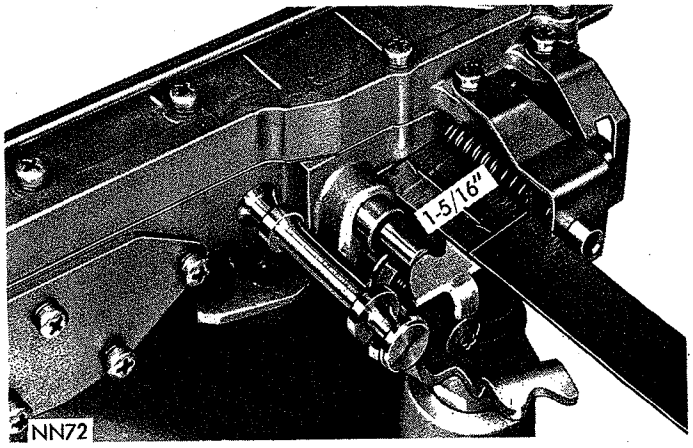


*Fig. 35—Line Pressure Adjustment*

### *Throttle Pressure*

Throttle pressures cannot be tested accurately; therefore, the adjustment should be measured if a malfunction is evident.

(1) Remove valve body assembly from transmission to perform adjustment. (Refer to Page 67).

(2) Loosen throttle lever stop screw lock nut and back off approximately five turns (Fig. 36).

(3) Insert gauge pin of Tool C-3763 between the throttle lever cam and kickdown valve.

(4) By pushing in on tool, compress kickdown valve against its spring so throttle valve is completely bottomed inside the valve body.

(5) As force is being exerted to compress spring, tighten throttle lever stop screw finger tight against throttle lever tang with throttle lever cam touching tool and the throttle valve bottomed. **Be sure adjustment is made with spring fully compressed and valve bottomed in the valve body.**

(6) Remove tool and tighten stop screw lock nut securely.

## AIR PRESSURE TESTS

A **"NO DRIVE"** condition might exist even with

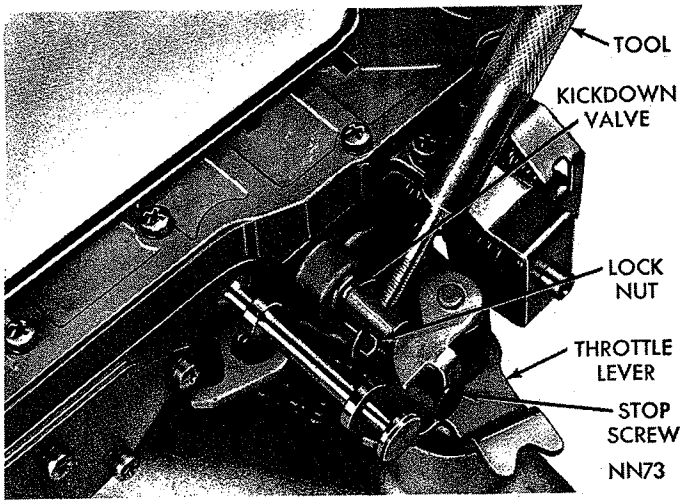


*Fig. 36—Throttle Pressure Adjustment*

MyMopar.com

correct fluid pressure, because of inoperative clutches or bands. The inoperative units, clutches, bands and servos can be located through a series of tests by substituting air pressure for fluid pressure (Fig. 37). The front and rear clutches, kickdown servo, and low-reverse servo may be tested by applying air pressure to their respective passages after the valve body assembly has been removed. Refer to Page 67. To make air pressure tests, proceed as follows:

**CAUTION: Compressed air supply must be free of all dirt or moisture. Use a pressure of 30 to 100 psi.**

### Front Clutch

Apply air pressure to front clutch "apply" passage and listen for a dull "thud" which indicates that front clutch is operating. Hold air pressure on for a few seconds and inspect system for excessive oil leaks.

### Rear Clutch

Apply air pressure to rear clutch "apply" passage and listen for a dull "thud" which indicates that rear clutch is operating. Also inspect for excessive oil leaks.

**NOTE: If a dull "thud" cannot be heard in the clutches, place finger tips on clutch housing and again apply air pressure. Movement of piston can be felt as the clutch is applied.**

### Kickdown Servo

Direct air pressure into front servo "apply" passage. Operation of servo is indicated by a tightening of front band. Spring tension on servo piston should release the band.

### Low and Reverse Servo

Direct air pressure into rear servo "apply" passage.

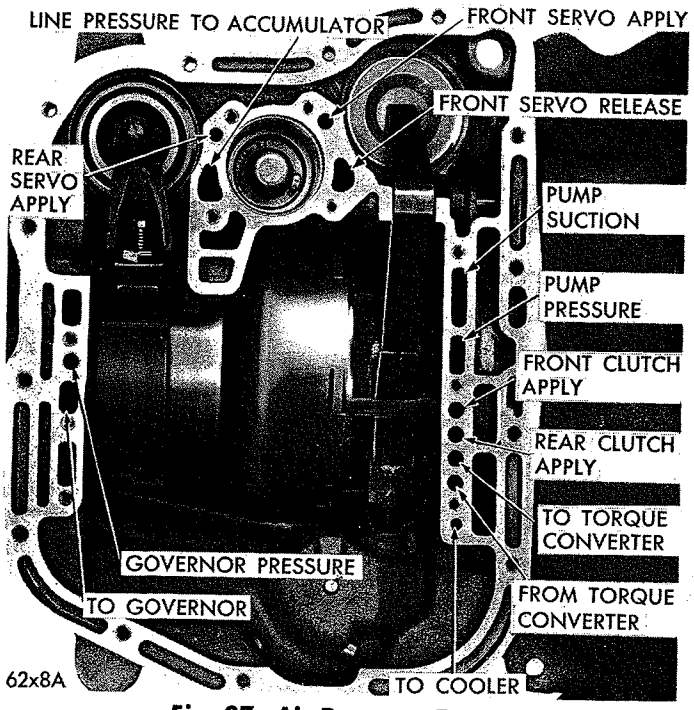


*Fig. 37—Air Pressure Tests*

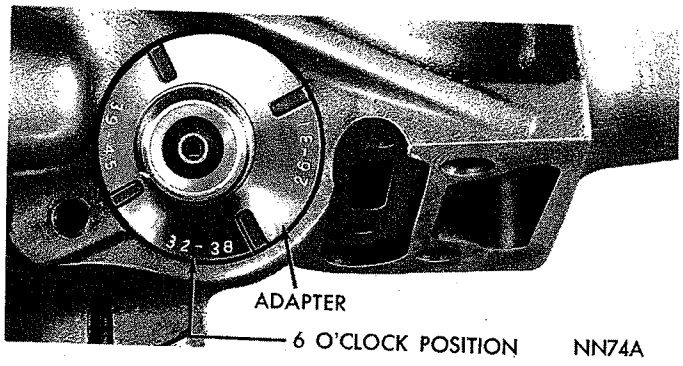


*Fig. 38—Speedometer Pinion and Adapter—Installed (Retainer Removed for View)*

Operation of servo is indicated by a tightening of rear band. Spring tension on servo piston should release the band.

If clutches and servos operate properly, no up-shift or erratic shift conditions indicate that malfunctions exist in the control valve body.

### Governor

Governor operating failures can generally be diagnosed by a road test or hydraulic pressure test. Refer to Page 60.

## SPEEDOMETER PINION

### Removal and Installation

Rear axle gear ratio and tire size determines pinion gear size requirements. Refer to "Speedometer Pinion Chart" for pinion usage.

(1) Remove bolt and retainer securing speedometer pinion adapter in the extension housing (Fig. 38).

(2) With cable housing connected, carefully work adapter and pinion out of the extension housing.

(3) If transmission fluid is found in cable housing, replace seal in the adapter (Fig. 39).

**CAUTION: Before installing pinion and adapter assembly make sure adapter flange and its mating area on extension housing are perfectly clean. Dirt or sand will cause mis-alignment resulting in speedometer pinion gear noise.**

(4) Select pinion range numbers on outside of adapter to correspond with number of pinion teeth.

(5) Install adapter in pinion housing with pinion range numbers aligned with 6 o'clock position (Fig. 38).

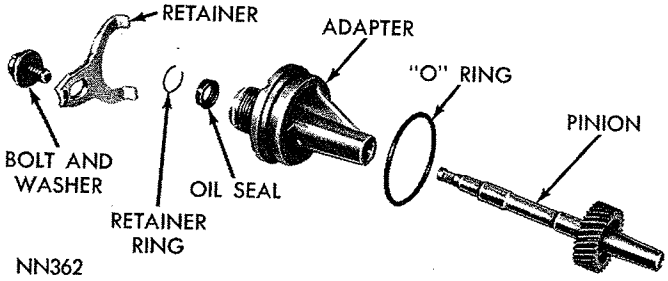


*Fig. 39—Speedometer Drive—Disassembled*

MyMopar.com

## SPEEDOMETER PINION CHARTS

## A-727-A WITH 225 CU. IN. ENG.

## POLICE AND TAXI

## OUTPUT SHAFT DRIVE GEAR—13 TEETH

| Tire Size | Axle Ratios Number of Pinion Gear Teeth and Color | | |
|---|---|---|---|
| | 2.93:1 | 3.23:1 | 3.55:1 |
| 7.35-14 | 30—Yellow | 33—Yellow | 37—White |
| 7.75-14 | 29—Black | 32—Black | 35—Orange |
| 8.25-14 | 29—Black | 32—Black | 35—Orange |
| 8.55-14 | 28—Blue | 31—Green | 34—Green |
| 6.70-15 | 28—Blue | 31—Green | 35—Orange |
| 7.10-15 | 28—Blue | 31—Green | 34—Green |
| 7.60-15 | 27—White | 30—Yellow | 33—Yellow |

## A-904-G AND A-904-LA

## OUTPUT SHAFT DRIVE GEAR—13 TEETH

| Tire Size | Axle Ratios Number of Pinion Gear Teeth and Color | | | |
|---|---|---|---|---|
| | 2.93:1 | 3.23:1 | 3.55:1 | 3.91:1 |
| 6.50-13 | 32—Black | 35—Orange | 38—Blue | 42—White |
| 7.00-13 | 31—Green | 34—Green | 38—Blue | 41—Red |
| 6.95-14 | 31—Green | 34—Green | 37—White | |
| 7.35-14 | 30—Yellow | 33—Yellow | 36—Red | 40—Orange |
| 7.75-14 | 29—Black | 32—Black | 35—Orange | 39—Green |
| 8.25-14 | 29—Black | 32—Black | 35—Orange | 38—Blue |
| 7.75-15 | 29—Black | 32—Black | 35—Orange | 39—Green |
| 8.15-15 | 29—Black | 32—Black | 35—Orange | 38—Blue |
| 8.45-15 | 28—Blue | 31—Green | 34—Green | 37—White |

## A-727-A AND B

## OUTPUT SHAFT DRIVE GEAR—13 TEETH

| Tire Size | Axle Ratios Number of Pinion Gear Teeth and Color | | | |
|---|---|---|---|---|
| | 2.76:1 | 2.93:1 | 3.23:1 | 3.55:1 |
| 7.35-14 | 28—Blue | 30—Yellow | 33—Yellow | 36—Red |
| 7.75-14 | 28—Blue | 29—Black | 32—Black | 35—Orange |
| 8.25-14 | 27—White | 29—Black | 32—Black | 35—Orange |
| 8.55-14 | 26—Red | 28—Blue | 31—Green | 34—Green |
| 7.75-15 | 27—White | 29—Black | 32—Black | 35—Orange |
| 8.15-15 | 27—White | 29—Black | 32—Black | 35—Orange |
| 8.45-15 | 26—Red | 28—Blue | 31—Green | 34—Green |

(6) Install retainer and bolt, with retainer tangs in adapter positioning slots. Tap adapter firmly into the extension housing and tighten retainer bolt to 100 inch-pounds.

## EXTENSION HOUSING YOKE SEAL

### *Replacement*

(1) Disconnect propeller shaft at rear universal joint. Carefully pull shaft yoke out of the transmis-

MyMopar.com

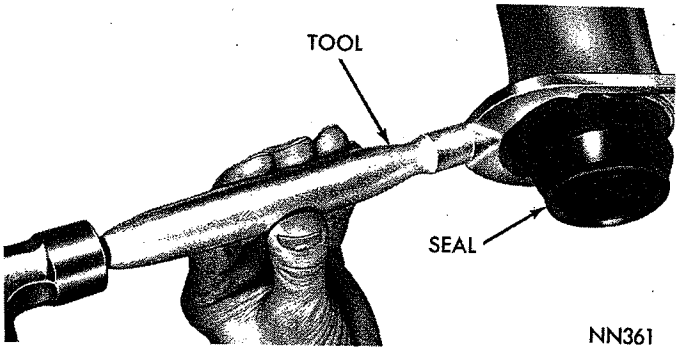


*Fig. 40—Removing Extension Housing Yoke Seal*

sion extension housing.

**CAUTION: Be careful not to scratch or nick ground surface on sliding spline yoke during removal and installation of the shaft asembly.**

(2) Remove the extension housing yoke seal (Fig. 40) with Tool C-3994 or C-3985.

(3) To install a new seal, position seal in opening of extension housing and drive it into the housing with Tool C-3995 or C-3972 (Fig. 41).

(4) Carefully guide front universal joint yoke into extension housing and on the mainshaft splines. Connect propeller shaft to rear axle pinion shaft yoke.

## EXTENSION HOUSING AND BEARING

### *Removal*

(1) Disconnect propeller shaft at rear universal joint. Carefully pull shaft assembly out of the extension housing.

(2) Remove speedometer pinion and adapter assembly (Fig. 38). Drain approximately two quarts of fluid from the transmission.

(3) Remove bolts securing extension housing to the crossmember. Raise transmission slightly with service jack Tool C-3203A, then remove center crossmember and support assembly.

(4) Remove extension housing to transmission bolts.

**Console Shift:** Remove two bolts securing gearshift torque shaft lower bracket to extension housing. Swing bracket out of way for extension housing removal.

**IMPORTANT: In removing or installing extension housing (step 5), the gearshift lever must be in "l" (low) position. This positions parking lock control rod rearward so it can be disengaged or engaged with the parking lock sprag.**

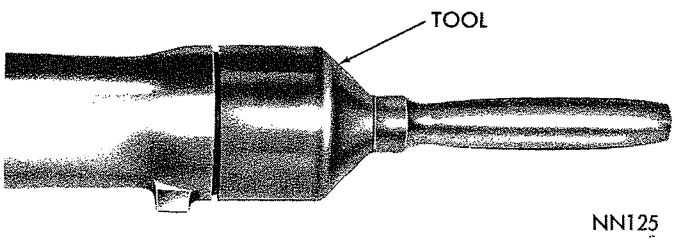


*Fig. 41—Installing Extension Housing Yoke Seal*

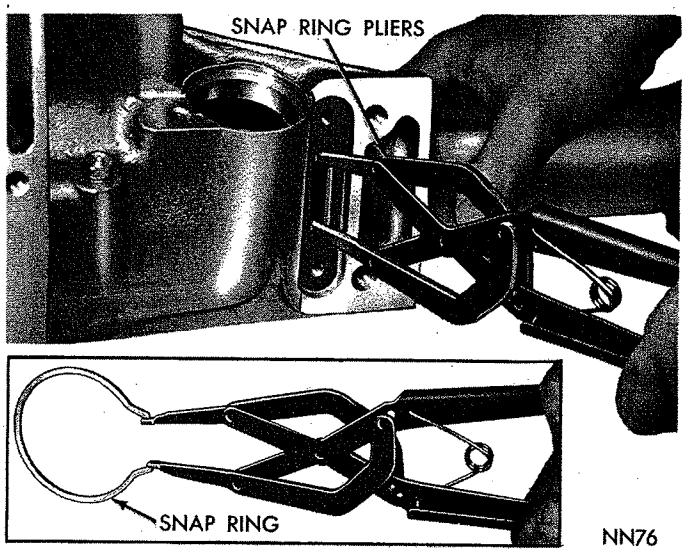


*Fig. 42—Removing or Installing Extension Housing*

(5) Remove two screws, plate and gasket from bottom of extension housing mounting pad. Spread large snap ring from output shaft bearing with Tool C-3301 (Fig. 42). With snap ring spread as far as posible, carefuly tap extension housing off the output shaft bearing. Carefully pull extension housing rearward, to remove parking lock control rod knob past the parking sprag, then remove the housing.

### *Bearing Replacement*

(1) Carefully unwind and slide yoke seal rear stop ring off the output shaft (Fig. 43). Slide yoke seal and front stop ring off the shaft.

(2) Remove output shaft bearing rear snap ring and remove bearing from the shaft.

(3) If removed, install snap ring in front groove on the output shaft. Install a new bearing on the shaft with ring groove on outer race toward the front (Fig. 43). Install the rear snap ring.

(4) Carefully unwind and slide yoke seal front stop ring into place on the shaft. Install seal with seal lips toward rear (Fig. 43), then install rear stop ring on the shaft.

**NOTE: To replace the extension housing bushing, refer to Page 76.**

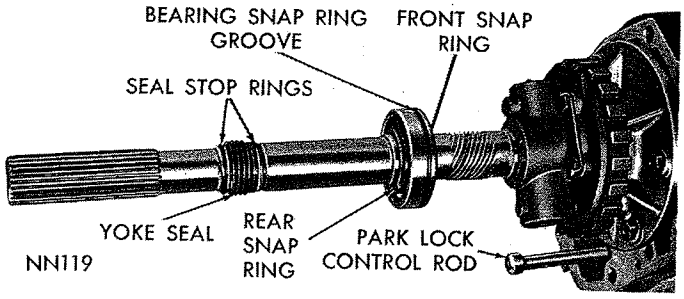


*Fig. 43—Output Shaft Bearing and Yoke Seal*

MyMopar.com

### Installation

(1) Place a new extension housing gasket on the transmission case. Position output shaft bearing retaining snap ring in extension housing. Slide extension housing on output shaft guiding the parking lock control rod knob past the parking sprag. While spreading large snap ring in housing with Tool C-3301 (Fig. 42), carefully tap housing into place, then release the snap ring. Make sure snap ring is fully seated in bearing outer race ring groove.

(2) Install gasket, plate and two screws on bottom of the extension housing mounting pad.

(3) Install and tighten extension housing bolts to 24 foot-pounds.

(4) Install center crossmember and rear mount assembly, tighten retaining bolts to 75 foot-pounds. Lower transmission, install extension housing to support bolts and tighten to 35 foot-pounds.

**Console Shift:** Align gearshift torque shaft lower bracket with the extension housing. Install the two retaining bolts and tighten securely.

(5) Install the speedometer pinion and adapter. Refer to Page 63.

(6) Carefully guide front universal joint yoke into extension housing and on the mainshaft splines. Connect propeller shaft to rear axle pinion shaft yoke.

(7) Add fluid to transmission to bring up to proper level. Refer to Page 47.

## GOVERNOR

### Removal

(1) Remove extension housing and output shaft bearing. Refer to Page 65.

(2) Using a screw driver carefully pry snap ring from weight end of governor valve shaft (Fig. 44). Slide valve and shaft assembly out of governor body.

(3) Remove large snap ring from weight end of governor body, lift out governor weight assembly.

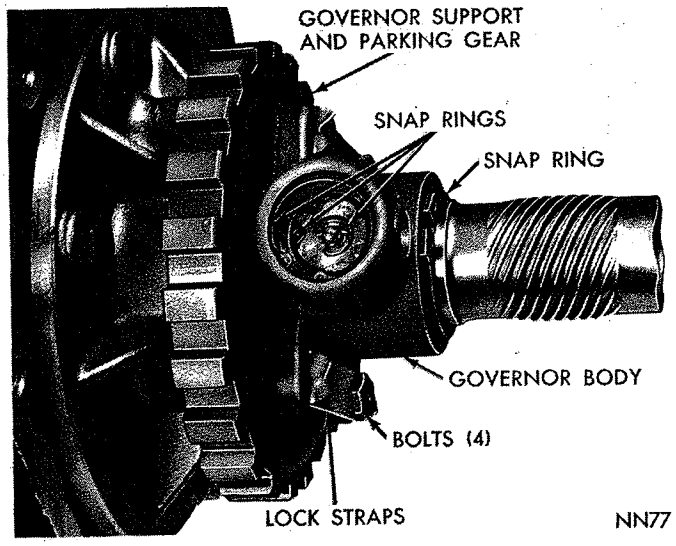


*Fig. 44—Governor Shaft and Weight Snap Rings*

(4) Remove snap ring from inside governor weight, remove inner weight and spring from the outer weight. Figure 45 shows a disassembled view of the governor asembly.

(5) Remove snap ring from behind governor body, then slide governor and support assembly off the output shaft. If necessary remove the four bolts and separate governor body from the support.

### Cleaning and Inspection

The primary cause of governor operating failure is due to a sticking governor valve or weights. Rough surfaces may be removed with crocus cloth. Thoroughly clean all parts in clean solvent and inspect for free movement before assembly.

### Installation

(1) Assemble governor body to the support (if disassembled) and tighten bolts finger tight. Make sure oil passage of governor body aligns with passage in the support.

(2) Position support and governor assembly on the output shaft. Align assembly so valve shaft hole in governor body aligns with hole in the output shaft, then slide assembly into place. Install snap ring behind governor body (Fig. 44). Tighten the body to support bolts to 100 inch-pounds. Bend ends of lock straps over bolt heads.

(3) Assemble governor weights and spring, and secure with snap ring inside of large governor weight. Place weight assembly in governor body and install snap ring.

(4) Place governor valve on the valve shaft, insert assembly into the body and through governor weights Install valve shaft retaining snap ring. Inspect valve and weight assembly for free movement after installation.

(5) Install output shaft bearing and extension housing, refer to Page 65. Connect the propeller shaft.

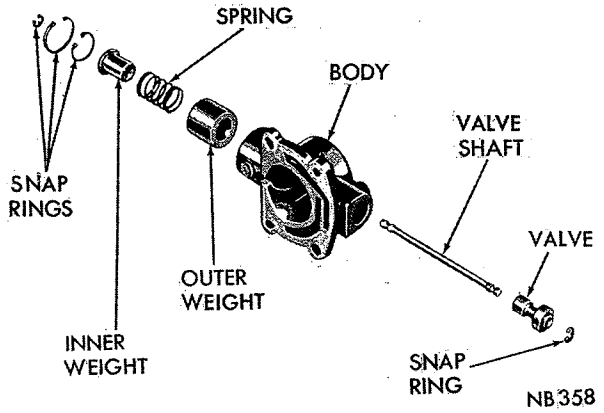


*Fig. 45—Governor Assembly—Disassembled*

MyMopar.com

## PARKING LOCK COMPONENTS

### Removal

(1) Remove extension housing, refer to Page 65.

(2) To replace the governor support and parking gear, refer to Page 66.

(3) Slide shaft out of extension housing to remove the parking sprag and spring (Fig. 46). Remove snap ring and slide the reaction plug and pin assembly out of the housing.

(4) To replace the parking lock control rod, refer to "Valve Body—Removal and Installation," Page 67.

### Installation

(1) Position sprag and spring in the housing and insert the shaft (Fig. 46). Make sure square lug on sprag is toward parking gear, and spring is positioned so it moves sprag away from the gear.

(2) Install reaction plug and pin assembly in the housing and secure with snap ring.

(3) Install extension housing and connect propeller shaft.

## VALVE BODY ASSEMBLY AND ACCUMULATOR PISTON

### Removal

(1) Raise vehicle on a hoist.

(2) Loosen oil pan bolts, tap the pan to break it loose allowing fluid to drain, then remove oil pan.

(3) Disconnect throttle and gearshift linkage from levers on the transmission. Loosen clamp bolts and remove the levers (Fig. 19).

(4) Remove E-clip (Fig. 47), securing parking lock rod to the valve body manual lever.

(5) Place a drain pan under transmission, then remove the ten hex-head valve body to transmission case bolts. Hold valve body in position while removing the bolts.

(6) While lowering valve body down out of transmission case, disconnect parking lock rod from the lever.

To remove parking lock rod, pull it forward out of the case. If necessary, rotate propeller shaft to align parking gear and sprag to permit knob on end of control rod to pass the sprag.

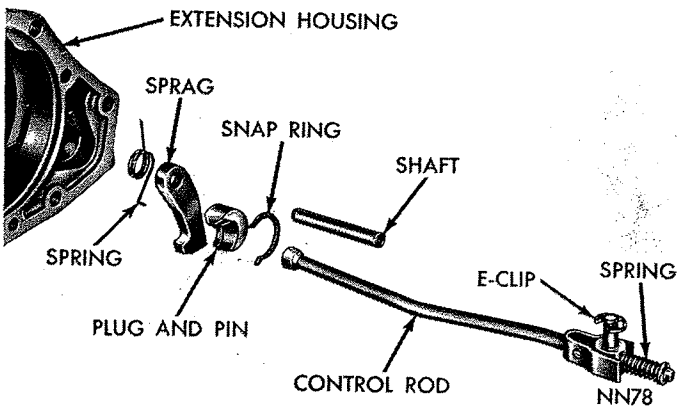


*Fig. 46—Parking Lock Components—Disassembled*

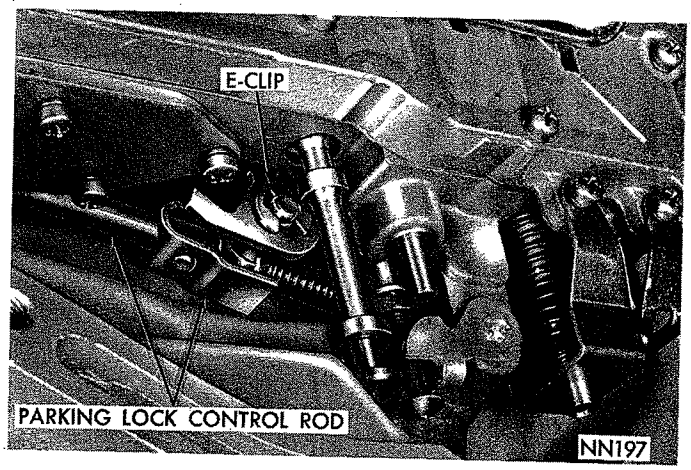


*Fig. 47—Parking Lock Control Rod Retaining E-Clip*

(7) Withdraw accumulator piston from the transmission case. Inspect piston for scoring, and rings for wear or breakage. Replace as required.

(8) If valve body manual lever shaft seal requires replacement, drive it out of the case with a punch.

(9) Drive a new seal into the case with a 15/16 inch socket and hammer (Fig. 48).

**NOTE: Servicing the valve body assembly is outlined on Page 73.**

### Installation

(1) If parking lock rod was removed, insert it through opening in rear of case with knob positioned against the plug and sprag. Move front end of rod toward center of transmission while exerting rearward pressure on the rod to force it past the sprag. (Rotate propeller shaft if necessary.)

(2) Install accumulator piston in the transmission case.

(3) Position accumulator spring on the valve body.

(4) Place valve body manual lever in **LOW** position. Lift valve body into its approximate position, connect

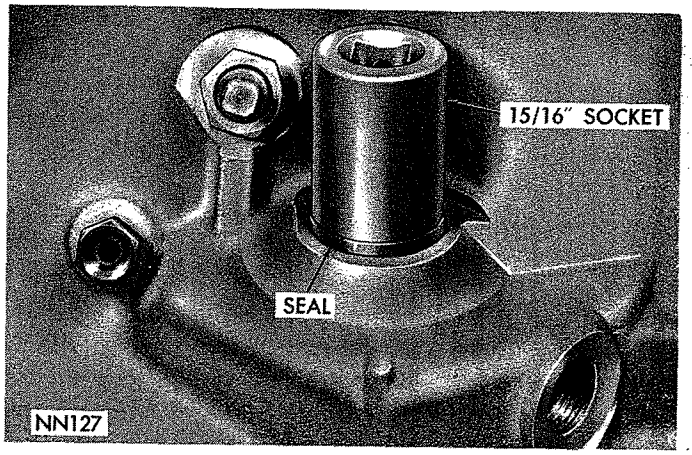


*Fig. 48—Installing Valve Body Manual Lever Shaft Oil Seal*

MyMopar.com

parking lock rod to manual lever and secure with E-clip. Position valve body in the case, install retaining bolts finger tight.

(5) With neutral starting switch installed, place manual lever in the neutral position. Shift valve body if necessary to center neutral finger over the neutral switch plunger. Snug bolts down evenly, then tighten to 100 inch-pounds.

(6) Install gearshift lever and tighten clamp bolt. Check lever shaft for binding in the case by moving lever through all detent positions. If binding exists, loosen valve body bolts and re-align.

(7) Make sure throttle shaft seal is in place, then install flat washer, lever and tighten the clamp bolt. Connect throttle and gearshift linkage and adjust as required.

(8) Install oil pan, using a new gasket. Add transmission fluid to bring it up to proper level. Refer to Page 47.

## SERVICE OUT OF VEHICLE

### TRANSMISSION AND CONVERTER REMOVAL

**The transmission and converter must be removed as an assembly; otherwise, the converter drive plate, pump bushing, and oil seal will be damaged. The drive plate will not support a load; therefore, none of the weight of the transmission should be allowed to rest on the plate during removal.**

(1) Connect a remote control starter switch, Tool C-763 to starter solenoid and position switch so engine can be rotated from under the vehicle.

(2) Disconnect high tension wire from the distributor cap.

(3) Remove cover plate from in front of converter to provide access to the converter drain plug and mounting bolts.

(4) Rotate engine with remote control switch to bring the drain plug to "6 o'clock" position. Drain torque converter and transmission.

(5) Mark converter and drive plate to aid in reassembly. The crankshaft flange bolt circle, inner and outer circle of holes in drive plate, and four tapped holes in front face of converter all have one hole offset so these parts will be installed in original position. This maintains the balance of engine and converter.

(6) Rotate engine with remote control switch to locate two converter to drive plate bolts at "5 and 7 o'clock" positions. Remove the two bolts, rotate engine with switch and remove the other two bolts. **Do not rotate converter or drive plate by prying with a screw driver or similar tool as the drive plate might become distorted. Also, starter should never be engaged if drive plate is not attached to converter with at least one bolt or if transmission case to engine bolts have been loosened.**

(7) Disconnect negative (ground) cable from the battery.

(8) Remove the starting motor assembly.

(9) Disconnect wire from the neutral starting switch.

(10) Disconnect gearshift rod from the transmission lever. Remove the gearshift torque shaft from transmission housing and left side rail.

**Console Shift:** Remove two bolts securing gearshift torque shaft lower bracket to the extension housing. Swing bracket out of way for transmission removal. Disconnect gearshift rod from the transmission lever.

(11) Disconnect throttle rod from throttle lever on the transmission.

(12) Disconnect oil cooler lines at transmission and remove oil filler tube. Disconnect the speedometer cable.

(13) Disconnect propeller shaft at rear universal joint. Carefully pull shaft assembly out of the extension housing.

(14) Remove rear mount to extension housing bolts.

(15) Install engine support fixture, Tool C-3487 (8 cyl. engine) or Tool C-3809 (6 cyl. engine) and raise the engine slightly (Fig. 49 or 50).

(16) Remove crossmember attaching bolts and remove the crossmember.

(17) Place a transmission service jack under transmission to support the assembly.

(18) Attach a small "C" clamp to edge of bell housing to hold converter in place during removal of the transmission.

(19) Remove the bell housing retaining bolts. Carefully work transmission rearward off engine block dowels and disengage converter hub from end of the crankshaft.

(20) Lower transmission jack and remove trans-

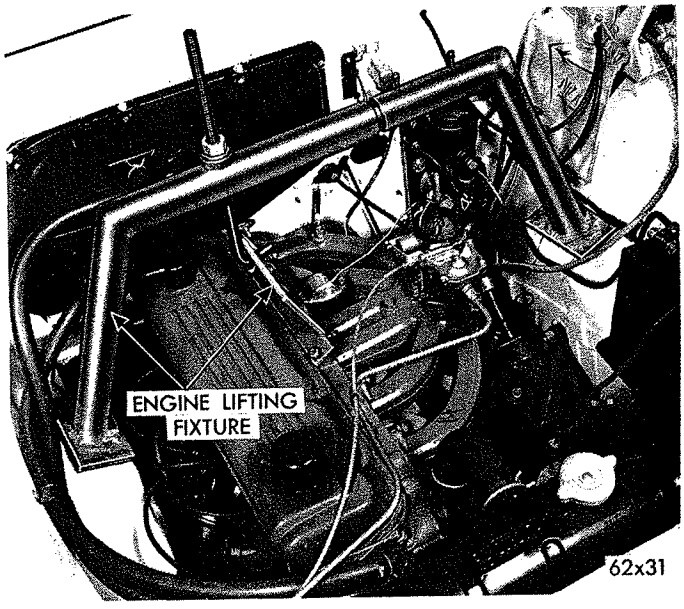


*Fig. 49—Engine Lifting Fixture (6 Cyl. Engine)*

MyMopar.com

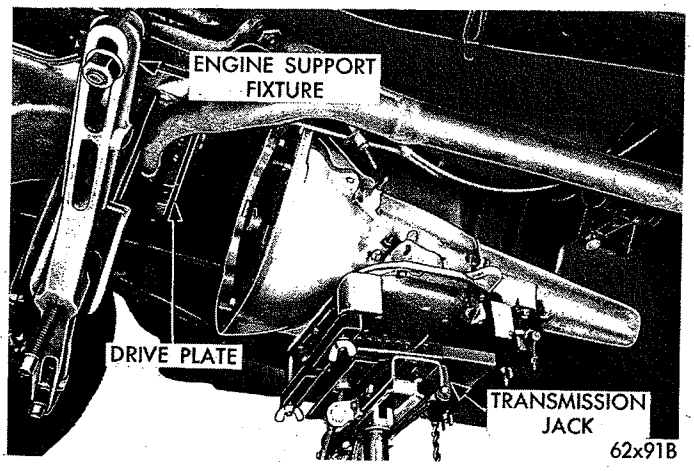


*Fig. 50—Engine Lifting Fixture (8 Cyl. Engine)*

mission and converter assembly.

(21) To remove converter assembly, remove "C" clamp from edge of bell housing, then carefully slide assembly out of the transmission.

## STARTER RING GEAR REPLACEMENT

The starter ring gear is mounted directly on outer diameter of the torque converter front cover. With torque converter removed from vehicle, replacement of the gear is as follows:

### *Removal*

(1) Cut through weld material at rear side of ring gear with a hack saw or grinding wheel (Fig. 51). Be careful not to cut or grind into front cover stamping.

(2) Scribe a heavy line on front cover next to front face of ring gear to aid in locating the new gear.

(3) Support converter with the four lug faces resting on blocks of wood. **The converter must not rest on the front cover hub during this operation.** Using a blunt chisel or drift and hammer, tap downward on ring gear near welded areas to break any remaining weld material (Fig. 51). Tap around ring gear until it comes off the converter.

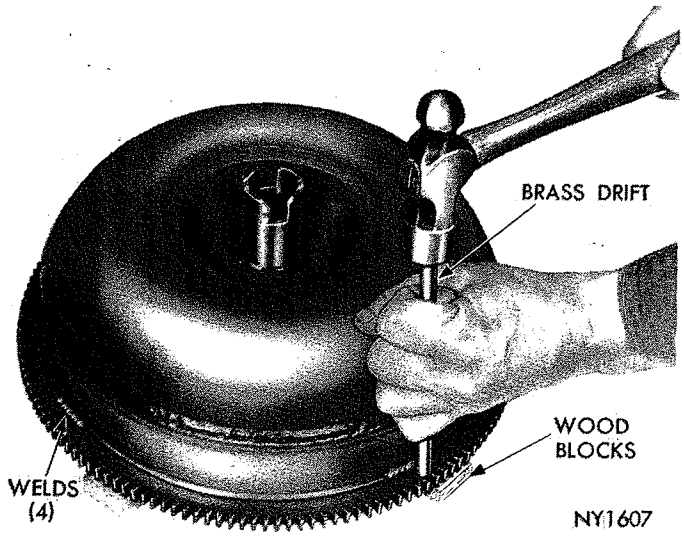


*Fig. 51—Removing Starter Ring Gear*

(4) Smooth off weld areas on the cover with a file.

### *Installation*

Any of the following methods may be used to heat and expand starter ring gear for installation on the converter:

**Oven:** Place ring gear in Oven C-794 and set temperature at 200 degrees F. Allow ring gear to remain in oven for 15 to 20 minutes.

**Boiling Water:** Place ring gear in a shallow container, add water, and heat for approximately eight minutes after water has come to a boil.

**Steam:** Place ring gear on a flat surface and direct a steam flow around gear for approximately two minutes.

**Flame:** Place ring gear squarely on a flat surface. Using a medium size tip, direct a slow flame evenly around inner rim of the gear. **Do not apply flame to the gear teeth.** Place a few drops of water on face of gear at intervals during heating process. When gear is hot enough to just boil the water, installation of gear on the torque converter can be made.

(1) After ring gear is expanded by heating, place the gear in position on converter front cover. Tap gear on the cover evenly with a plastic or rawhide mallet until face of gear is even with scribed line (made during removal) on the front cover. Make sure gear is even with scribed line around full circumference of the front cover.

(2) Reweld ring gear to torque converter front cover, being careful to place, as nearly as possible, same amount of weld material in exactly same location as was used in original weld. This is necessary in order to maintain proper balance of the unit. Place welds alternately on opposite sides of converter to minimize distortion.

(3) The following suggestions are offered as an aid in making the weld:

a. **Do not gas weld.**

b. Use a D.C. welder that is set at straight polarity or an A.C. welder if the proper electrode is available.

c. Use a ⅛ inch diameter welding rod, and a welding current of 80 to 125 amps.

d. Direct the arc at intersection of the gear and front cover from an angle of 45 degrees from rear face of the gear.

(4) Inspect gear teeth and remove all nicks where metal is raised, weld metal splatter, etc., in order to ensure quiet starter operation.

## TORQUE CONVERTER FLUSHING

In the event that any part has failed in the transmission, the torque converter should be flushed to insure that fine metal particles are not later transferred back into the reconditioned transmission.

The torque converter **must be removed** from vehicle for flushing, as the converter should never be

MyMopar.com

rotated by the starter with transmission removed.

(1) Place torque converter in an upright position and pour two quarts of new clean solvent or kerosene into converter through the impeller hub.

(2) Turn and shake converter so as to swirl solvent through the internal parts. Turning turbine and stator with transmission input and reaction shafts will aid in dislodging foreign material.

(3) Position converter in its normal operating position with drain plug at the lowest point. Remove drain plug and drain the solvent. Rotate turbine and stator, and shake converter while draining to prevent dirt particles from settling.

(4) Repeat flushing operation at least once, or as many times as required until solvent or kerosene drained out is clear.

(5) After flushing, shake and rotate converter several times with drain plug out to remove any residual solvent and dirt. Flush any remaining solvent from converter with two quarts of new transmission fluid. This will prevent any adverse effect the solvent may have on the transmission seals. Reinstall drain plug and tighten to 14 foot-pounds.

## PUMP OIL SEAL

### *Replacement*

The pump oil seal can be replaced without removing pump and reaction shaft support assembly from the transmission case.

**NOTE: The vent shield is not used or required on the A-904-G and A-904-LA pumps. See Figures 52 and 53.**

(1). **A-904-G and A-904-LA:** Screw seal remover Tool C-3758 into seal (Fig. 52), then tighten screw portion of tool to withdraw the seal.

**A-727-A and B:** Using Tool C-3861, remove seal in the same manner.

(2) **A-904-G and A-904-LA:** To install a new seal, place seal in opening of the pump housing (lip side facing inward). Using Tool C-3757, drive seal into housing until tool bottoms (Fig. 53).

**A-727-A and B:** Using Tool C-3860, install new seal in the same manner.

## DISASSEMBLY—SUB-ASSEMBLY REMOVAL

Prior to removing any transmission sub-assemblies, plug all openings and thoroughly clean exterior of the unit, preferably by steam. Cleanliness through entire disassembly and assembly cannot be over-emphasized. When disassembling, each part should be washed in a suitable solvent, then dried by compressed air. **Do not wipe parts with shop towels.** All mating surfaces in the transmission are accurately machined; therefore, careful handling of parts must be exercised to avoid nicks or burrs.

### *Drive Train End Play*

Measuring drive train end play before disassembly will usually indicate when a thrust washer change is

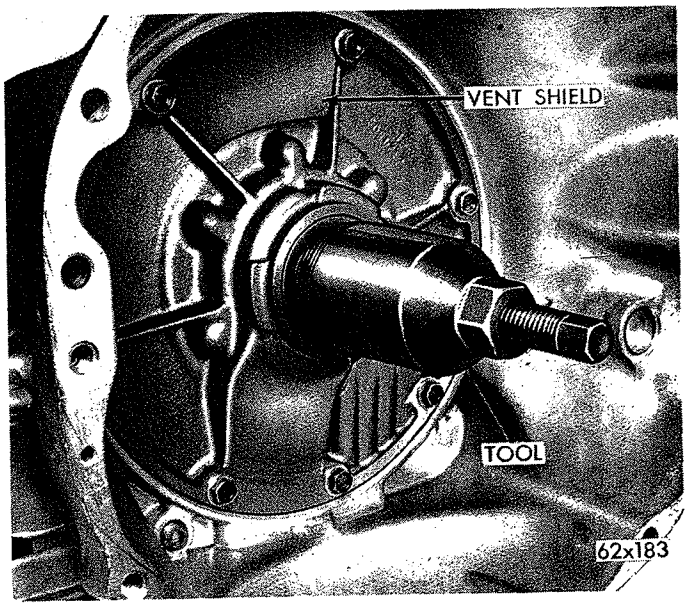


*Fig. 52—Removing Pump Oil Seal*

required, (except when major parts are replaced). **The thrust washer is located between reaction shaft support and front clutch retainer on A-727-A and B transmissions. The thrust washer is located between input and output shafts on A-904-G and A-904-LA transmissions.**

(1) Attach a dial indicator to transmission bell housing with its plunger seated against end of input shaft (Fig. 54). Chuck input shaft in and out to obtain end play reading. End play specifications are: .022 to .091 inch for A-904-G and A-904-LA transmissions, and .036 to .084 inch for A-727-A and B transmissions.

(2) Record indicator reading for reference when reassembling the transmission. Refer to Page 94.

### *Oil Pan*

(1) **A-904-G:** Place transmission assembly in repair

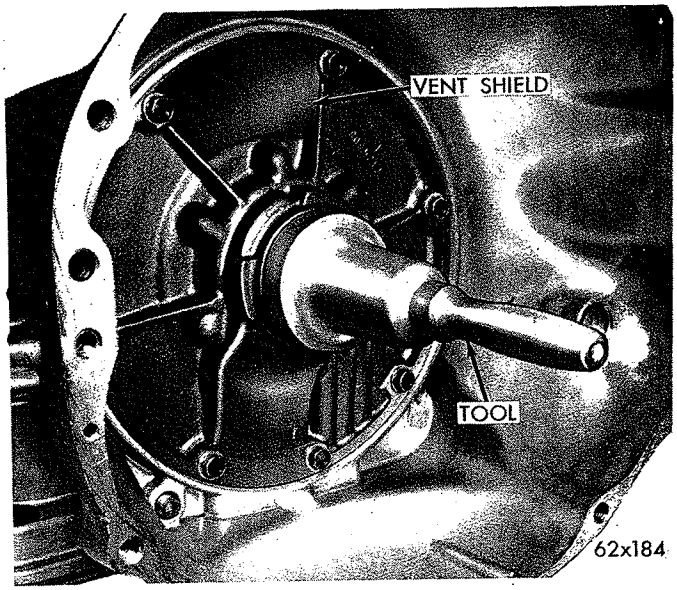


*Fig. 53—Installing Pump Oil Seal*

MyMopar.com

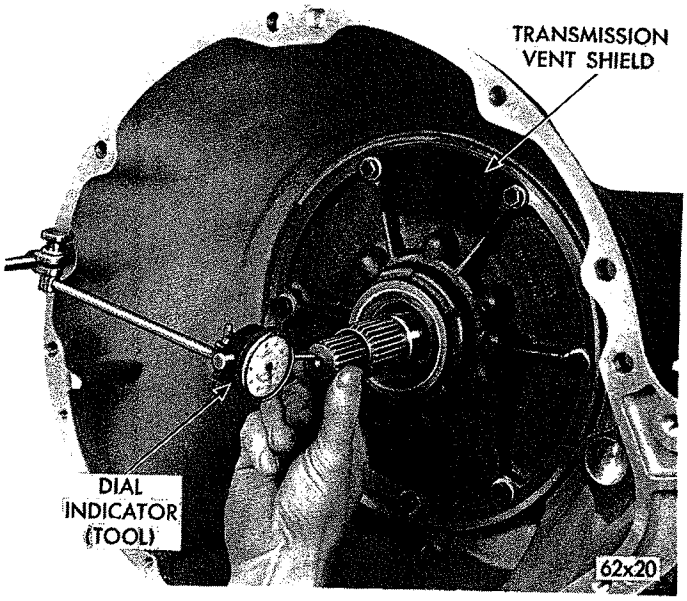


**Fig. 54—Measuring Drive Train End Play**

stand, Tool C-3750.

**A-904-LA, A-727-A and B:** Use adapter C-3882, with repair stand to support these transmissions (Fig. 55).

If repair stand DD-1014 is available, fabricate two attaching brackets (Fig. 56) and install transmission in the stand (Fig. 57), file out the 7/16″ holes if necessary to obtain bracket alignment. This stand provides easier disassembly and assembly as the transmission can be rotated as desired.

(2) Unscrew oil pan bolts and remove oil pan and gasket.

### Valve Body Assembly

(1) Loosen clamp bolts and remove throttle and gearshift levers from the transmission.

(2) Remove the ten hex-head valve body to transmission bolts. Remove E-clip securing parking lock rod to the valve body manual lever (Fig. 47).

(3) While lifting valve body upward out of transmission case, disconnect parking lock rod from the lever.

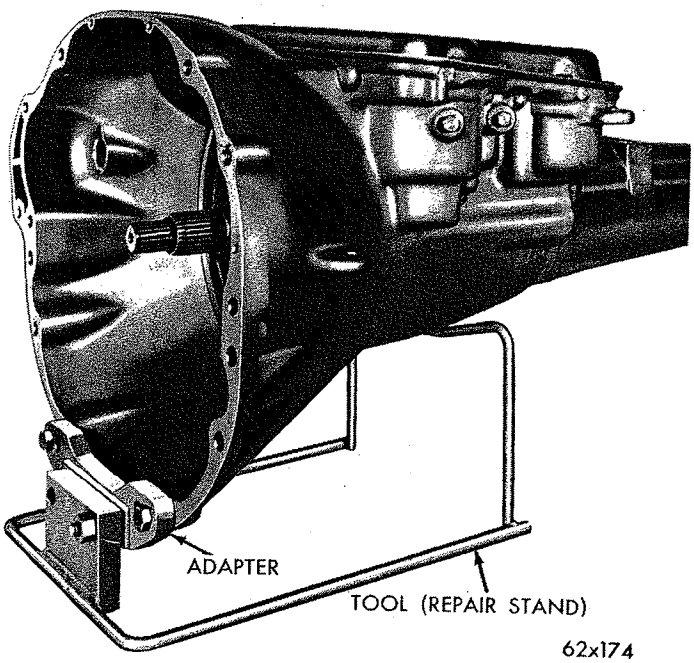


**Fig. 55—Transmission Installed in Repair Stand**

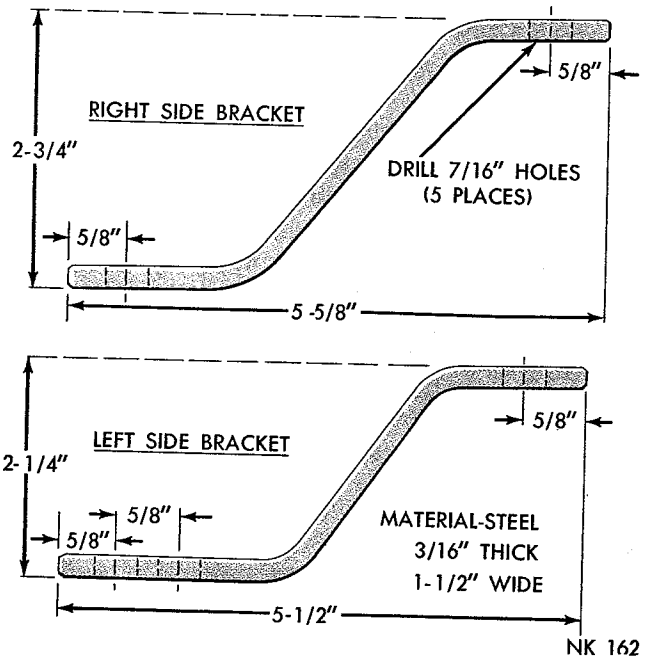


**Fig. 56—Repair Stand Bracket Dimensions**

### Accumulator Piston and Spring

(1) Lift spring off accumulator piston and withdraw piston from the case.

### Extension Housing

(1) Remove speedometer pinion and adapter assembly.

(2) Remove extension housing to transmission bolts.

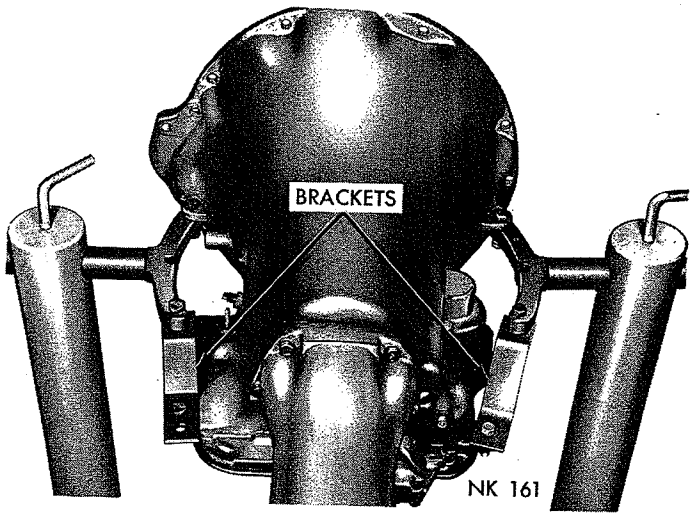


**Fig. 57—Transmission Installed in Repair Stand (Tool DD-1014)**

MyMopar.com

Before removing extension housing, pull parking lock rod forward out of the case. Rotate propeller shaft if necessary to align parking gear and sprag to permit knob on end of control rod to pass the sprag.

(3) Remove two screws, plate and gasket from bottom of extension housing mounting pad. Spread large snap ring from output shaft bearing with Tool C-3301A (Fig. 42). With snap ring spread as far as possible, carefully tap extension housing off the output shaft and bearing.

(4) Carefully unwind and slide yoke seal rear stop ring off the output shaft (Fig. 43). Slide yoke seal and front stop ring off the shaft.

(5) Remove output shaft bearing rear snap ring. Remove bearing from shaft, then remove front snap ring.

### Governor and Support

(1) Using a screw driver, carefully pry snap ring from weight end of governor valve shaft (Fig. 44). Slide valve and shaft assembly out of the governor body.

(2) Remove snap ring from behind governor body, then slide governor body and support assembly off the output shaft.

### Oil Pump and Reaction Shaft Support

(1) Remove oil pump housing retaining bolts.

(2) Tighten front band adjusting screw until band is tight on front clutch retainer. This prevents clutch retainer from coming out with pump which might cause unnecessary damage to the clutches.

(3) Attach Tool C-3752 to pump housing flange, (Fig. 58), in threaded holes in the flange.

(4) Bump outward evenly on the two "knocker weights" to withdraw pump and reaction shaft support assembly from the case.

### Front Band and Front Clutch

(1) Loosen front band adjuster, remove band strut and slide band out of the case.

(2) Slide front clutch assembly out of the case.

### Input Shaft and Rear Clutch

(1) Grasp input shaft, and slide input shaft and rear clutch assembly out of the case.

**CAUTION: Be careful not to lose thrust washer located between rear end of input shaft and forward end of the output shaft.**

### Planetary Gear Assemblies, Sun Gear and Driving Shell

(1) While supporting output shaft and driving shell, carefully slide assembly forward and out through the case.

**CAUTION: Be very careful not to damage ground surfaces on output shaft during removal.**

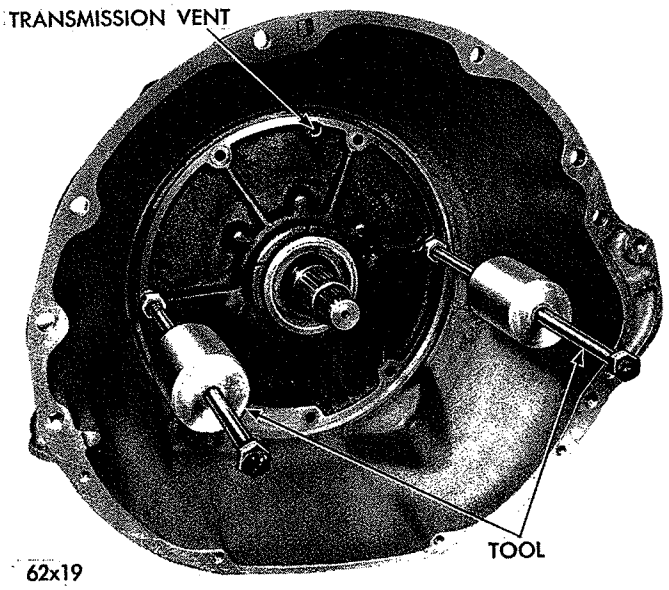


*Fig. 58—Removing Oil Pump and Reaction Shaft Support Assembly*

### Rear Band and Low-Reverse Drum

(1) Remove low-reverse drum, then loosen rear band adjuster, remover band strut and link, then remove band from the case.

### Overrunning Clutch

(1) Note position of overrunning clutch rollers and spring before disassembly to assist in reassembly.

(2) Carefully slide out clutch hub and remove rollers and springs. **If the overrunning clutch cam and/or roller spring retainer are found damaged or worn, refer to Page 90 for replacement procedures.**

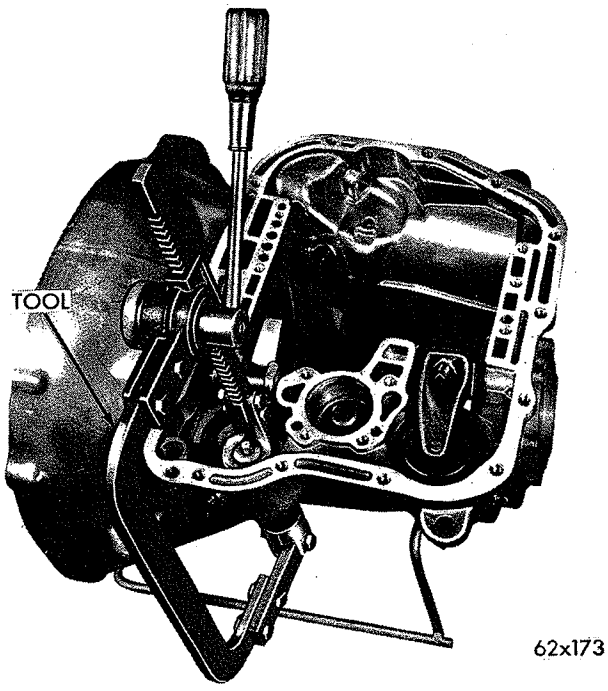


*Fig. 59—Compressing Kickdown Servo Spring*

MyMopar.com

### Kickdown Servo

(1) Compress kickdown servo spring by using engine valve spring compressor, Tool C-3422, then remove snap ring (Fig. 59).

(2) Remove rod guide, springs and piston rod from the case. Be careful not to damage piston rod or guide during removal.

(3) Insert Tool C-484 inside piston and withdraw piston from the transmission case.

### Low and Reverse Servo

(1) Compress low and reverse servo piston spring by using engine valve spring compressor, Tool C-3422, then remove the snap ring.

(2) Remove spring retainer, spring, and servo piston and plug assembly from the case.

## RECONDITION SUB-ASSEMBLIES

The following procedures cover disassembly, inspection, repair, and assembly of each sub-assembly as removed from the transmission.

Heli-Coil inserts are recommended for repairing damaged, stripped or worn threads in aluminum parts. Refer to Page 47.

Pre-sized service bushings are available for replacement for most all bushings in the TorqueFlite transmission. The two bushings in sun gear are not serviced because of the low cost of sun gear assembly. If bushings are found worn or scored, they should be replaced as outlined in the following reconditioning procedures.

The bushing replacement tools listed by "SP" numbers are part of Tool Kit C-3887.

**NOTE: The bushing in the oil pump has been relocated in the pump housing, thus requiring new installing heads. The new installing head for A-904-G and LA transmissions is SP-5117, and SP-5118 is used for A-727-A and B transmissions.**

The use of crocus cloth is permissible where necessary, providing it is used carefully. When used on valves, use extreme care to avoid rounding off the sharp edges. The sharp edge is vitally important to this type of valve. Sharp edges prevent dirt and foreign matter from getting between the valve and body, thus reducing the possibilities of sticking. When it becomes necessary to recondition transmission, and vehicle has accumulated considerable mileage, install new seal rings on parts requiring their usage.

**NOTE: Coat each part with Automatic Transmission Fluid AQ-ATF Suffix "A" during assembly.**

## VALVE BODY ASSEMBLY

**CAUTION: Never clamp any portion of valve body or transfer plate in a vise. Any slight distortion of the aluminum body or transfer plate will result in sticking valves, excessive leakage or both. When removing or installing valves or plugs, slide them in or out carefully. Do not use force.**

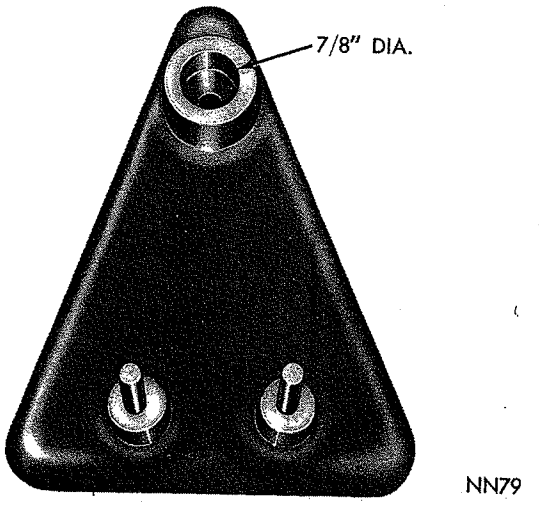


*Fig. 60—Rework Valve Body Repair Stand*

Rework valve body repair stand, Tool C-3749, by drilling the 5/16" diameter hole to 7/8" and 3/4" deep (Fig. 60). The stand can then be used with either the old or new type valve bodies.

### Disassembly

(1) Place valve body assembly on repair stand, Tool C-3749, (Fig. 61). Remove three screws from fluid filter and lift off the filter.

(2) While holding spring retainer firmly against the spring force, remove the three bracket retaining screws (Fig. 61).

(3) Remove spring retainer, torque converter control valve spring, and regulator valve spring with line pressure adjusting screw assembly. **Do not alter setting of line pressure adjusting screw and nut. The nut has an interference thread and does not turn easily on the screw.**

(4) Slide regulator valve out of valve body. Slide torque converter control valve out of valve body.

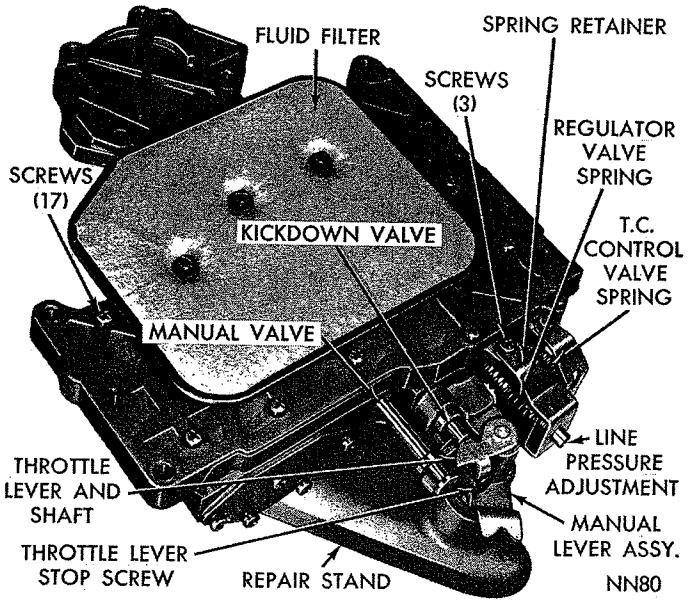


*Fig. 61—Valve Body and Control Assembly*

MyMopar.com

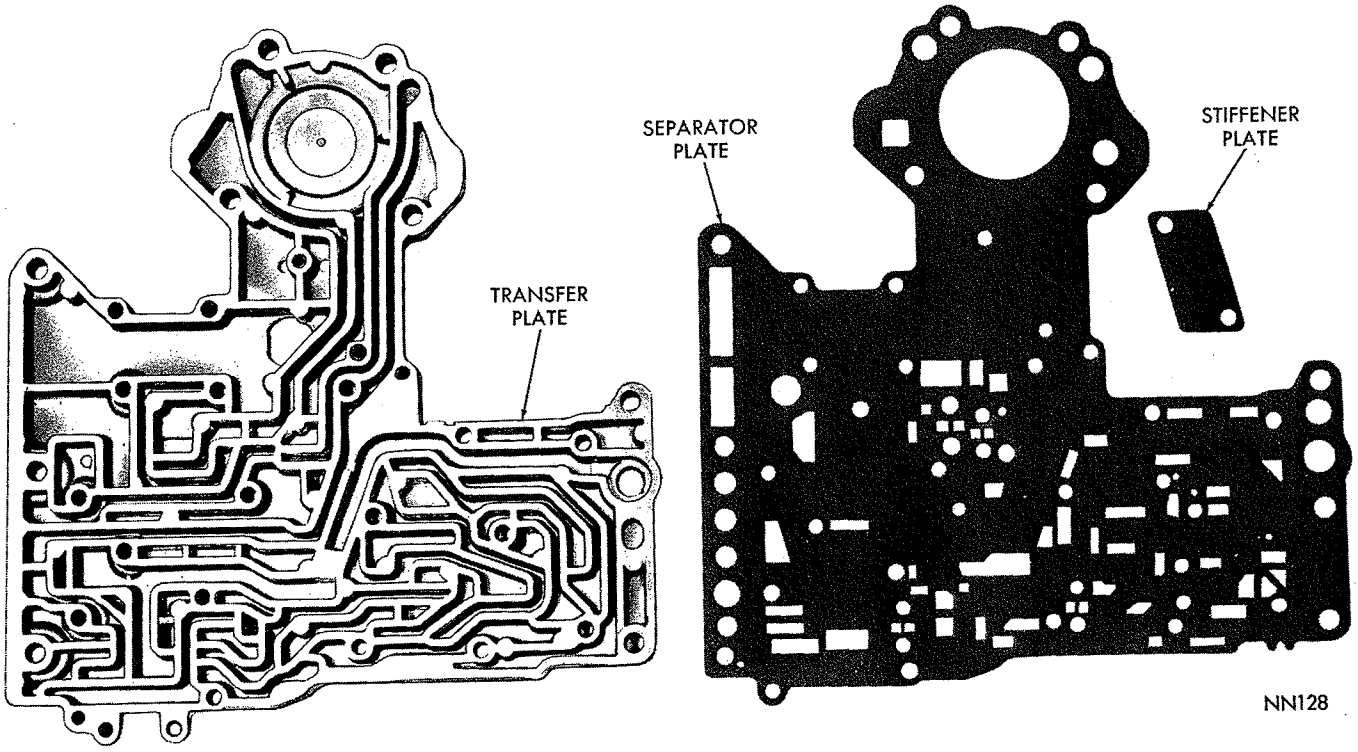


***Fig. 62—Transfer and Separator Plate***

(5) Remove the 17 transfer plate retaining screws. Carefully lift transfer plate and steel separator plate assembly off the valve body.

(6) Invert transfer plate assembly and remove the stiffener plate. Remove remaining screws securing separator plate to transfer plate, and carefully lift off separator plate (Fig. 62).

(7) Note location of six steel balls in valve body, one is larger than other five and is in the larger chamber (Fig. 63). Remove the steel balls.

(8) Invert valve body and lay it on a clean cloth or paper. Remove E-clip and washer from throttle lever shaft (Fig. 64). Remove any burrs from shaft, then while holding manual lever detent ball and spring in their bore with Tool C-3765 or similar tool, slide manual lever off the throttle shaft. Remove the detent ball and spring.

(9) Remove manual valve, carefully slide it out of valve body with a rotating motion.

(10) Remove throttle lever and shaft from the valve body.

(11) Remove shuttle valve cover plate (Fig. 64). Remove E-clip from exposed end of the shuttle valve.

(12) Remove throttle lever stop screw assembly

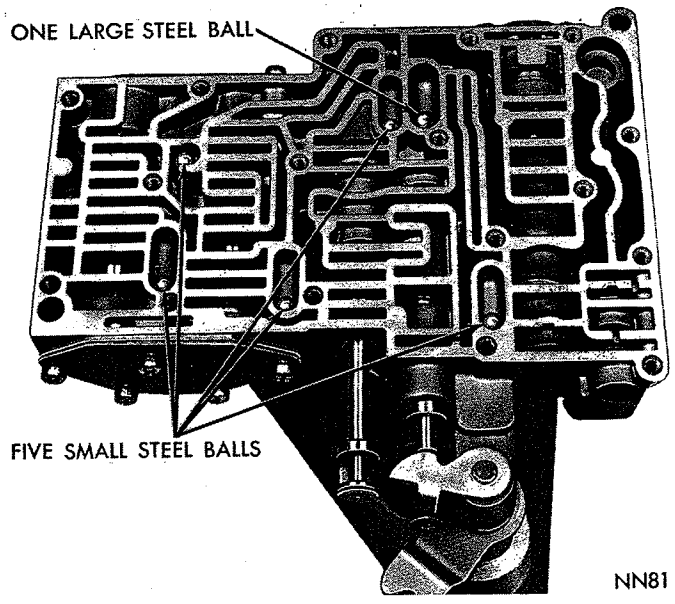


***Fig. 63—Steel Ball Locations***

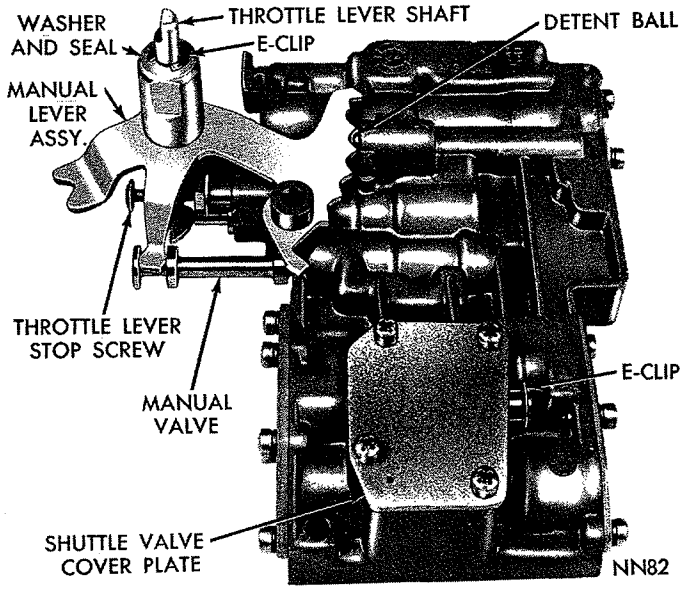


***Fig. 64—Valve Body Controls (Assembled View)***

MyMopar.com

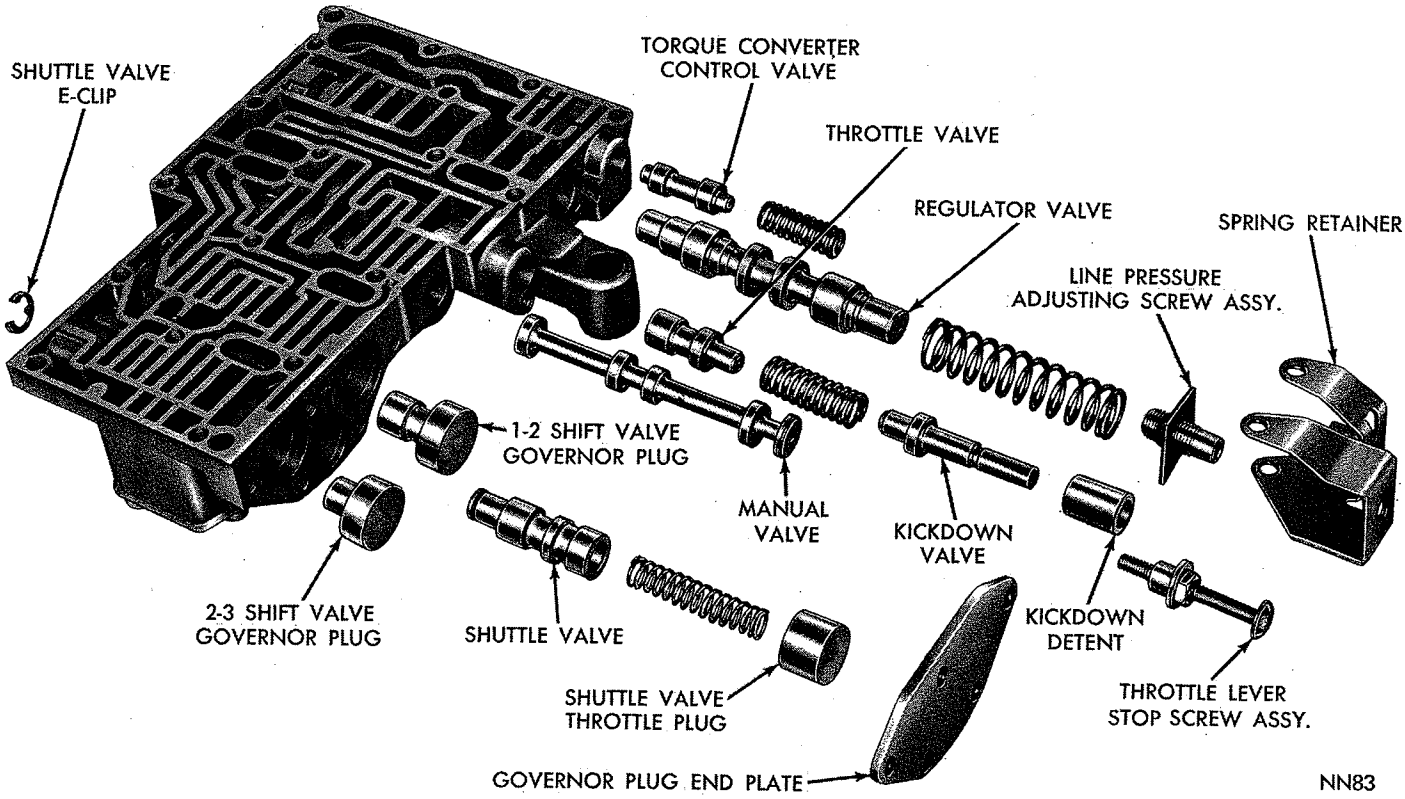


***Fig. 65—Valve Body—Lever Side (Disassembled)***

(Fig. 65), be careful not to disturb setting any more than is necessary.

(13) Remove kickdown detent, kickdown valve, throttle valve spring and throttle valve (Fig. 65).

(14) Remove governor plug end plate (Fig. 65). Tip up valve body to allow shuttle valve throttle plug, spring, shuttle valve, and shift valve governor plugs to slide out into your hand.

Note longer stem on 1-2 shift valve plug as a means for identification.

(15) Remove shift valve end plate (Fig. 67) and slide out the two springs and valves.

(16) Remove regulator valve end plate. Slide regulator valve line pressure plug, sleeve, and regulator valve throttle pressure plug out of valve body.

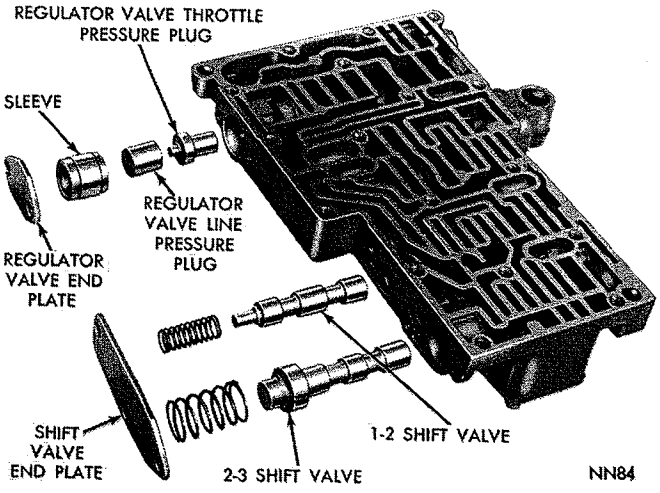


***Fig. 66—Valve Body—Shift Valve Side (Disassembled)***

### *Cleaning and Inspection*

Allow all parts to soak a few minutes in a suitable clean solvent. Wash thoroughly and blow dry with compressed air. Make sure all passages are clean and free from obstructions.

Inspect manual and throttle valve operating levers and shafts for being bent, worn or loose. If a lever is loose on its shaft, it may be **silver soldered** only, or lever and shaft assembly should be replaced. **Do not attempt to straighten bent levers.**

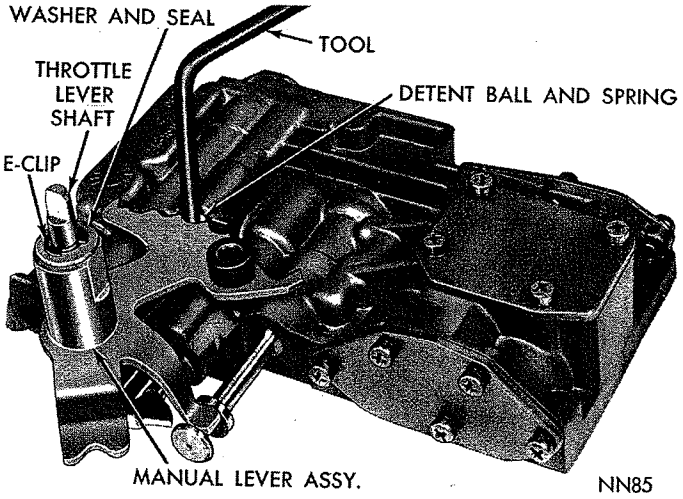


***Fig. 67—Installing Detent Ball, Spring and Control Levers***

MyMopar.com

Inspect all mating surfaces for burrs, nicks and scratches. Minor blemishes may be removed with crocus cloth, using only a very light pressure. Using a straight edge, Tool C-3335, inspect all mating surfaces for warpage or distortion. Slight distortion may be corrected, using a surface plate. Make sure all metering holes in steel plate are open. Using a pen light, inspect bores in valve body for scores, scratches, pits and irregularities.

Inspect all valve springs for distortion and collapsed coils. Inspect all valves and plugs for burrs, nicks and scores. Small nicks and scores may be removed with crocus cloth, providing extreme care is taken not to round off sharp edges. The sharpness of these edges is vitally important because it prevents foreign matter from lodging between valve and valve body, thus reducing possibility of sticking. Inspect all valves and plugs for freedom of operation in valve body bores. When bores, valves and plugs are clean and dry, the valves and plugs should fall freely in the bores. **The valve body bores do not change dimensionally with use. Therefore, a valve body that was functioning properly when vehicle was new, will operate correctly if it is properly and thoroughly cleaned. There is no need to replace valve body unless it is damaged in handling.**

### *Assembly*

(1) Place separator plate on the transfer plate (Fig. 62). Install stiffener plate and retaining screws. Make sure all bolt holes are aligned, then tighten stiffener plate screws to 28 inch-pounds.

(2) Place 1-2 and 2-3 shift valve governor plugs in their respective bores (Fig. 65). Install shuttle valve, spring and shuttle valve throttle plug. Install governor plug end plate and tighten the five retaining screws to 28 inch-pounds.

(3) Install E-clip on end of shuttle valve (Fig. 65). Install shuttle valve cover plate and tighten the four retaining screws to 28 inch-pounds.

(4) Install 1-2 and 2-3 shift valves and springs (Fig. 66). Install shift valve end plate and tighten the three retaining screws to 28 inch-pounds.

(5) Install regulator valve throttle pressure plug, sleeve, and line pressure plug (Fig. 66). Install regulator valve end plate and tighten the two retaining screws to 28 inch-pounds.

(6) Install throttle valve and spring (Fig. 65). Slide kickdown detent on the kickdown valve (counterbore side of detent toward valve), then install assembly in the valve body.

(7) Install throttle lever stop screw (Fig. 65), and tighten lock nut finger tight.

(8) Install manual valve in valve body (Fig. 65).

(9) Install throttle lever and shaft on valve body (Fig. 67). Insert detent spring and ball in its bore in valve body. Depress ball and spring with Tool C-3765 or similar tool and slide manual lever over throttle shaft so that it engages manual valve and detent ball. Install retaining washer and E-clip on throttle shaft.

(10) Position valve body assembly on the repair stand.

(11) Place six steel balls in valve body chambers with large ball in the large chamber (Fig. 63).

(12) Position transfer plate assembly on valve body. Install 17 retaining screws, starting at center and working outward, tighten screws to 28 inch-pounds.

(13) Install torque converter valve and regulator valve (Fig. 65).

(14) Position torque converter valve spring and regulator valve spring over ends of their respective valves. Place line pressure adjusting screw assembly on end of regulator valve spring with long dimension of nut at right angles to valve body (Fig. 61).

(15) Install spring retainer, making sure converter valve spring is engaged on the tang and position squarely in retainer. Tighten the three retaining screws to 28 inch-pounds (Fig. 61).

**Measure and if necessary, align spring retainer as described on Page 62.**

(16) Install oil filter and tighten the three retaining screws to 28 inch-pounds.

(17) Attach parking lock control rod to manual lever and secure with E-clip.

**After valve body has been serviced and completely assembled, adjust throttle and line pressures, as outlined on Page 62. However, if pressures were satisfactory prior to disassembly, use original settings.**

## ACCUMULATOR PISTON AND SPRING

### *Inspection*

Inspect seal rings for wear and make sure they turn freely in piston grooves. It is not necessary to remove rings unless conditions warrant. Inspect piston for nicks, burrs, scores and wear. Inspect piston bore in the case for scores or other damage. Inspect piston spring for distortion. Replace parts as required.

## EXTENSION HOUSING BUSHING AND OIL SEAL

### *Replacement*

(1) Pry or drive oil seal out of extension housing with a long blunt drift. Be sure not to mar oil seal surface in the housing.

(2) **A-904-G and A-904-LA:** Press or drive out bushing with Tool C-3996 (Fig. 68).

**A-727-A and B:** Remove bushing in the same manner with Tool C-3974.

(3) **A-904-G and A-904-LA:** Slide a new bushing on installing end of Tool C-3996. Align oil hole in bushing with oil slot in the housing, then press or drive bushing into place (Fig. 68).

**A-727-A and B:** Using Tool C-3974, install a new

MyMopar.com

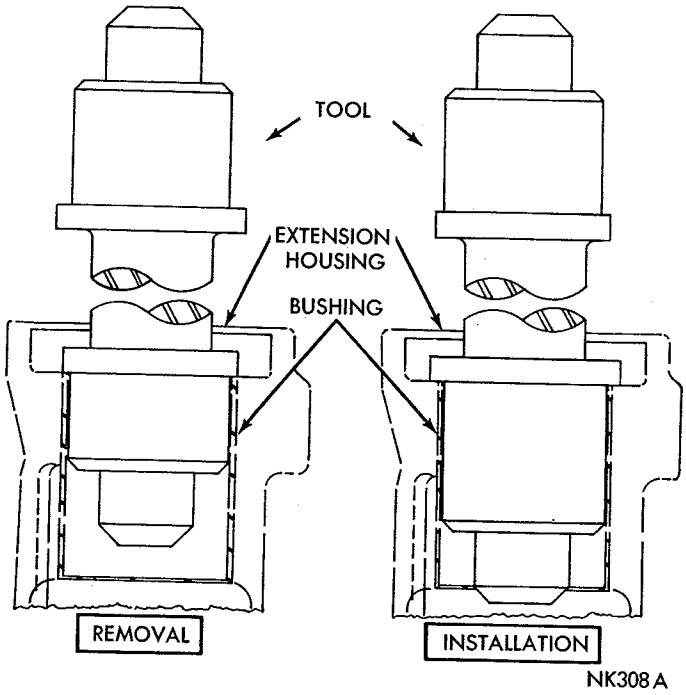


***Fig. 68—Replacing Extension Housing Bushing***

bushing in same manner.

(4) **A-904-G and A-904-LA:** Drive a new oil seal into housing with Tool C-3995 (Fig. 41).

**A-727-A and B:** Using Tool C-3972, install a new oil seal in same manner.

## PARKING LOCK SPRAG

### *Disassembly*

(1) Slide shaft out of extension housing to remove parking sprag and spring (Fig. 46). Remove snap ring and slide reaction plug and pin assembly out of the housing.

### *Inspection*

Inspect sprag shaft for scores and free movement in the housing and sprag. Inspect sprag and control rod springs for distortion and tension. Inspect square lug on sprag for broken edges, also lugs on parking gear for damage. Inspect knob on end of control rod for nicks, burrs and free turning.

To replace parking gear, refer to "Governor and Support—Disassembly and Assembly," Page 66.

### *Assembly*

(1) Position sprag and spring in housing and insert the shaft (Fig. 46). Make sure square lug on sprag is toward parking gear, and spring is positioned so it moves sprag away from the gear.

(2) Install reaction plug and pin assembly in the housing and secure with snap ring.

## GOVERNOR AND SUPPORT

### *Disassembly*

(1) Remove large snap ring from weight end of governor body, lift out weight assembly.

(2) Remove snap ring from inside governor weight, remove inner weight and spring from outer weight.

(3) If lugs on support gear are damaged, remove four bolts and separate support from governor body.

### *Cleaning and Inspection*

Figure 45 shows a disassembled view of the governor assembly.

Inspect all parts for burrs and wear. Inspect inner weight for free movement in outer weight, and outer weight for free movement in governor body. Inspect valve for free movement in governor body. The weights and valve should fall freely in the bores when clean and dry. Rough surfaces may be removed with crocus cloth.

Inspect governor weight spring for distortion. Inspect lugs on support gear for broken edges or other damage. Thoroughly clean all governor parts in clean solvent and test for free movement before assembly.

### *Assembly*

(1) If support was separated from governor body, assemble and tighten bolts finger tight. Make sure oil passage of governor body aligns with passage in the support.

(2) Assemble governor weights and spring, and secure with snap ring inside of large governor weight. Place weight assembly in governor body and install snap ring.

## OIL PUMP AND REACTION SHAFT SUPPORT—A-904-G AND A-904-LA

### *Disassembly*

Figure 69 shows the oil pump and reaction shaft support disassembled.

(1) Remove bolts from rear side of reaction shaft support and lift support off the pump.

(2) Remove rubber seal ring from pump body flange.

(3) Drive out oil seal with a blunt punch.

### *Inspection*

Inspect interlocking seal rings (Fig. 69) on reaction shaft support for wear or broken locks, make sure they turn freely in the grooves. Do not remove rings unless conditions warrant. Inspect front clutch piston retainer to reaction shaft support thrust washer for wear. Washer thickness should be .043 to .045 inch, replace if necessary. Inspect machined surfaces on pump body and reaction shaft support for nicks and burrs. Inspect pump body and reaction shaft support bushings for wear or scores. Inspect pump rotors for scoring or pitting. With rotors cleaned and installed in pump body, place a straight edge across face of rotors and pump body. Use a feeler gauge to measure clearance between straight edge and face of rotors. Clearance limits are from .001 to .0025 inch. Also, measure rotor tip clearance between inner and outer rotor

MyMopar.com

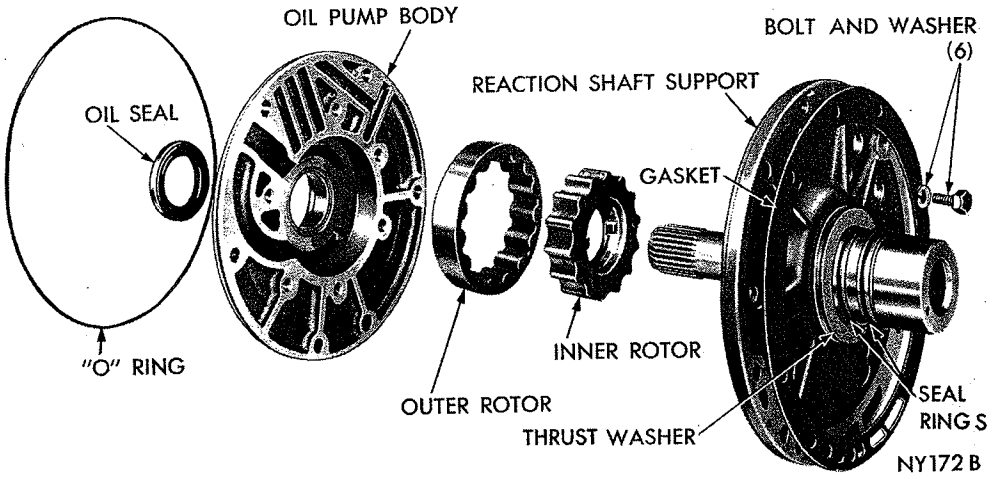


***Fig. 69—Oil Pump and Reaction Shaft Support***

teeth. Clearance limits are from .007 to .012 inch.

### Pump Bushing Replacement

(1) Place pump housing (seal face down) on a smooth firm surface.

(2) Place removing head, Tool SP-3551 in bushing and install handle, Tool SP-3549 in the removing head (Fig. 70).

(3) Drive bushing straight down and out of pump housing bore. Be careful not to cock tool in the bore.

(4) Position new bushing on installing head, Tool SP-5117.

(5) With pump housing on a smooth clean surface, start bushing and installing head in the bushing bore. Install handle, Tool SP-3549 in the installing head (Fig. 70).

(6) Drive bushing into housing until tool bottoms in the pump cavity. Be careful not to cock tool during installation.

(7) Stake bushing in place by using a blunt punch or similar tool (Fig. 71). A gentle tap at each stake slot location will suffice.

(8) Using a narrow-bladed knife or similar tool, remove high points or burrs around staked area (Fig. 71). Do not use a file or similar tool that will remove more metal than is necessary.

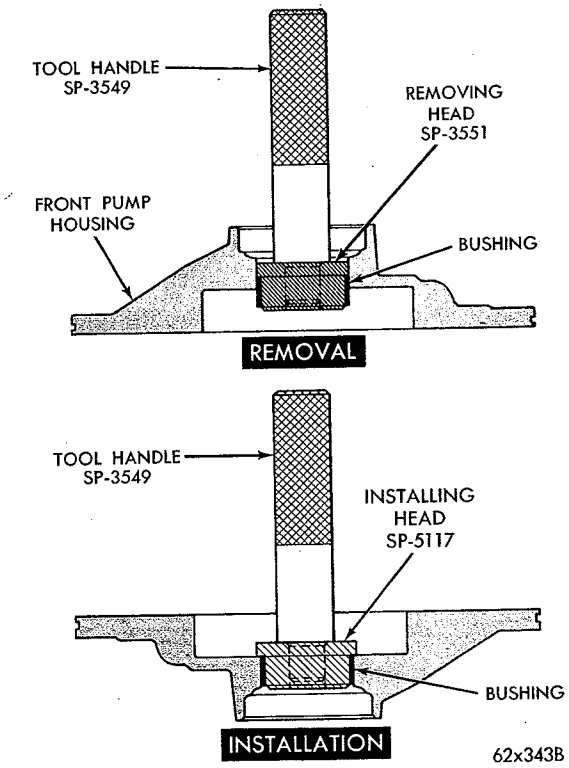


***Fig. 70—Replacing Pump Bushing***

### Reaction Shaft Bushing Replacement

In case of a reaction shaft bushing failure, always inspect the support for wear from the input shaft seal ring lands. If worn or grooved, replace support assembly.

(1) Assemble remover Tool SP-3631, cup Tool SP-3633, and hex nut Tool SP-1191 (Fig. 72).

**CAUTION: Do not clamp any part of reaction shaft or**

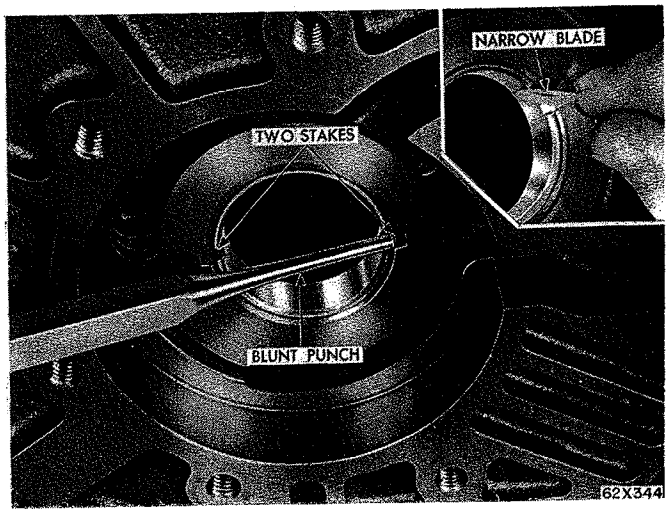


***Fig. 71—Staking Pump Bushing***

MyMopar.com

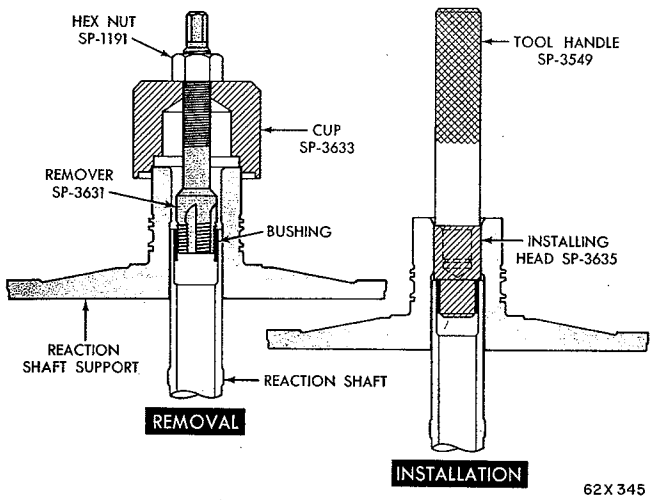


*Fig. 72—Replacing Reaction Shaft Bushing*

**support in a vise.**

(2) With cup held firmly against reaction shaft, thread remover into bushing as far as possible by hand.

(3) Using a wrench, screw remover into bushing 3 to 4 additional turns to firmly engage threads in the bushing.

(4) Turn hex nut down against cup to pull bushing from reaction shaft. Thoroughly clean reaction shaft to remove chips made by remover threads.

(5) Lightly grip bushing in a vise or with pliers and back tool out of the bushing. Be careful not to damage threads on bushing remover.

(6) Slide a new bushing on installing head Tool SP-3635, and start them in the bore of reaction shaft (Fig. 72).

(7) Support reaction shaft upright on a clean smooth surface and install handle Tool SP-3549 in installing head. Drive bushing into the shaft until tool bottoms.

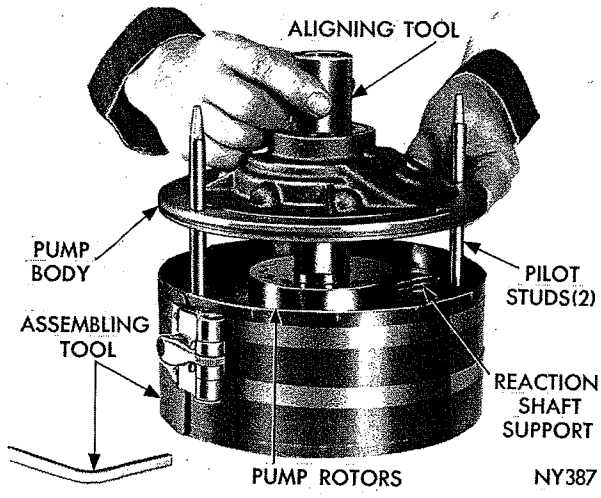


*Fig. 73—Assembling Pump and Reaction Shaft Support*

(8) Thoroughly clean reaction shaft support assembly before installation.

### Assembly

(1) Place reaction shaft support in assembling Tool C-3759, with hub of support and tool resting on a smooth **flat** surface bench (Fig. 73). Screw two pilot studs, Tool C-3283 into threaded holes of reaction shaft support flange.

(2) Assemble and place rotors in center of the support (Fig. 73).

(3) Lower pump body over the pilot studs, insert Tool C-3756 through pump body and engage pump inner rotor. Rotate the rotors with tool to enter rotors in pump body, then with pump body firmly against reaction shaft support, tighten clamping tool securely.

(4) Invert pump and reaction shaft support assembly with clamping tool intact. Install support to pump body bolts and tighten to 125 inch-pounds. Remove clamping tool, pilot studs and rotor alignment tool.

(5) Place a new oil seal in opening of pump housing (lip of seal facing inward). Using Tool C-3757, drive seal into housing until tool bottoms.

## OIL PUMP AND REACTION SHAFT SUPPORT—A-727-A AND B

### Disassembly

Figure 74 shows the oil pump and reaction shaft support disassembled.

(1) Remove bolts from rear side of reaction shaft support, and remove vent baffle and lift support off the pump.

(2) Remove rubber seal ring from pump body flange.

(3) Drive out oil seal with a blunt punch.

### Inspection

Inspect interlocking seal rings (Fig. 74) on reaction shaft support for wear or broken locks, make sure they turn freely in the grooves. Do not remove rings unless conditions warrant. Inspect machined surfaces on pump body and reaction shaft support for nicks and burrs. Inspect pump body and reaction shaft support bushings for wear or scores. Inspect pump rotors for scoring or pitting. With rotors cleaned and installed in pump body, place a straight edge across face of rotors and pump body. Use a feeler gauge to measure clearance between straight edge and face of rotors. Clearance limits are from .001 to .0025 inch. Also, measure rotor tip clearance between inner and outer teeth. Clearance limits are from .007 to .012 inch.

### Pump Bushing Replacement

(1) Place pump housing on a clean smooth surface with rotor cavity down.

(2) Place removing head Tool SP-3550 in the bushing, and install handle Tool SP-3549 in the removing

MyMopar.com

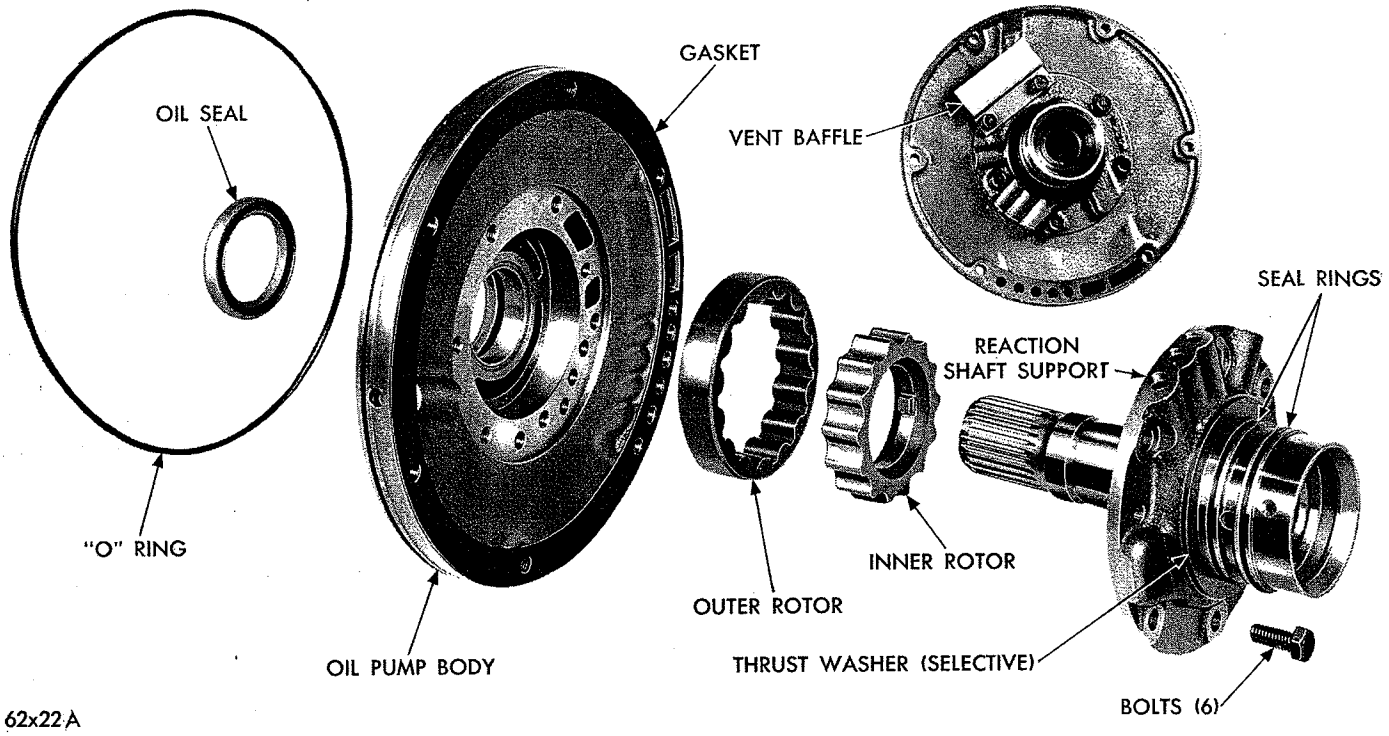


***Fig. 74—Oil Pump and Reaction Shaft Support***

head (Fig. 75).

(3) Drive bushing straight down and out of the bore. Be careful not to cock tool in the bore.

(4) Position a new bushing on installing head Tool SP-5118.

(5) With pump housing on a smooth clean surface (hub end down), start bushing and installing head in the bushing bore. Install handle Tool SP-3549 in installing head (Fig. 75).

(6) Drive bushing into housing until tool bottoms in the pump cavity. Be careful not to cock tool during installation.

(7) Stake the bushing in place by using a blunt punch or similar tool (Fig. 76). A gentle tap at each stake slot location will suffice.

(8) Using a narrow-bladed knife or similar tool, remove high points or burrs around staked area (Fig. 76). Do not use a file or similar tool that will remove more metal than is necessary.

(9) Thoroughly clean pump housing before installa-

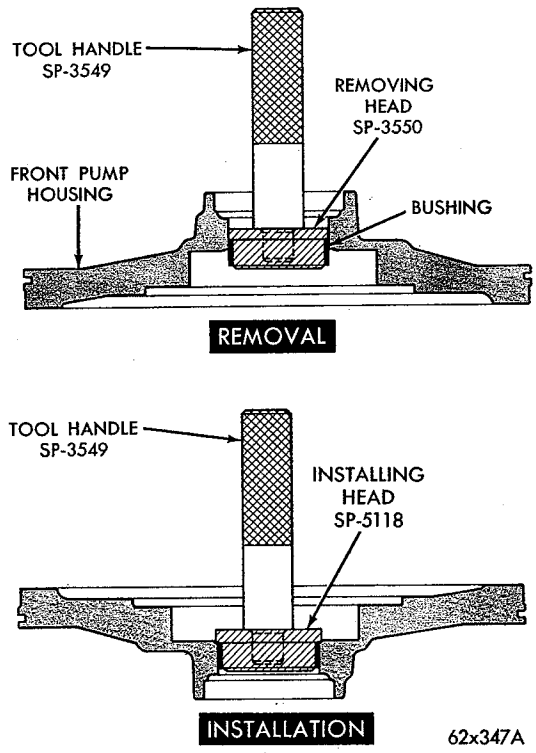


***Fig. 75—Replacing Pump Bushing***

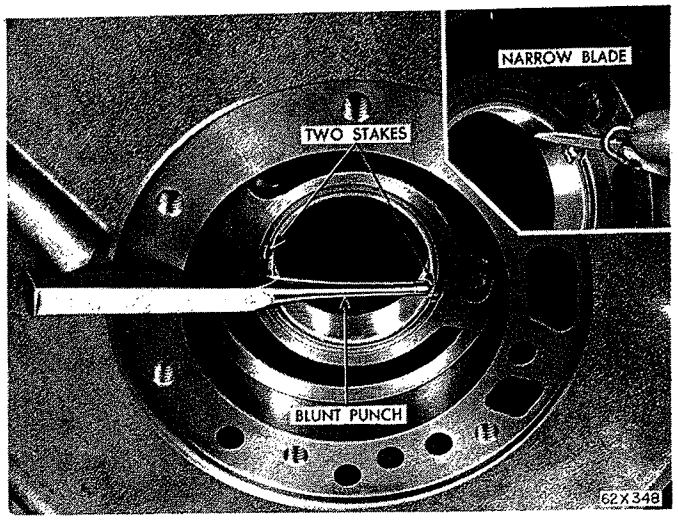


***Fig. 76—Staking Pump Bushing***

MyMopar.com

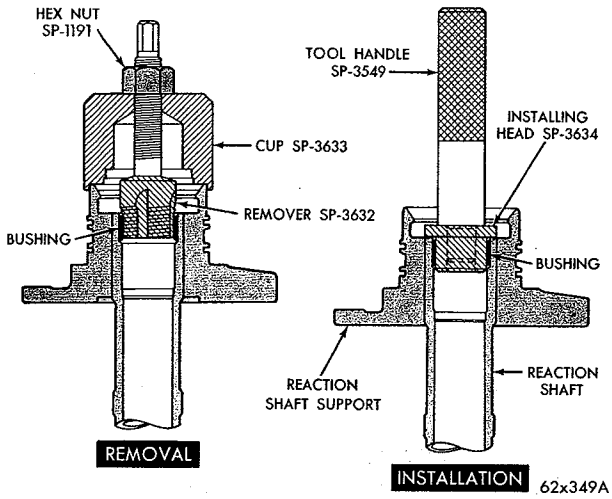


***Fig. 77—Replacing Reaction Shaft Bushing***

tion.

### *Reaction Shaft Bushing Replacement*

(1) Assemble remover Tool SP-3632, cup Tool SP-3633, and hex nut Tool SP-1191 (Fig. 77).

**CAUTION: Do not clamp any part of reaction shaft or support in a vise.**

(2) With cup held firmly against reaction shaft, thread remover into bushing as far as possible by hand.

(3) Use a wrench to screw remover into bushing 3 to 4 additional turns to firmly engage threads in the bushing.

(4) Turn hex nut down against the cup to pull bushing from reaction shaft. Thoroughly clean reaction shaft to remove chips made by removing threads.

(5) Lightly grip bushing in a vise or with pliers and back tool out of the bushing. Be careful not to damage threads on bushing remover.

(6) Slide a new bushing (chamfered end first) on installing head Tool SP-3634, and start them in the bore of reaction shaft (Fig. 77).

(7) Support reaction shaft upright on a clean smooth surface and install handle Tool SP-3549 in installing head. Drive bushing into shaft until tool bottoms.

(8) Thoroughly clean reaction shaft support assembly before installation.

### *Assembly*

(1) Assemble pump rotors in the pump housing (Fig. 74).

(2) Install reaction shaft support and position vent baffle over vent opening. Install retaining bolts and tighten to 150 inch-pounds.

(3) Place a new oil seal in opening of pump housing (lip of seal facing inward) using Tool C-3860 drive seal into housing until tool bottoms.

## FRONT CLUTCH—A-904-G AND A-904-LA

### *Disassembly*

Figure 78 shows a disassembled view of the front clutch assembly.

(1) Use a screw driver to remove large snap ring that secures pressure plate in the clutch piston retainer. Lift pressure plate and clutch plates out of the retainer.

(2) Install compressor, Tool C-3575 over piston spring retainer (Fig. 79). Compress spring and remove snap ring, then slowly release tool until spring retainer is free of the hub. Remove tool, retainer and spring.

(3) Invert clutch retainer assembly and bump it on a wood block to remove the piston. Remove seal rings from the piston and clutch retainer hub.

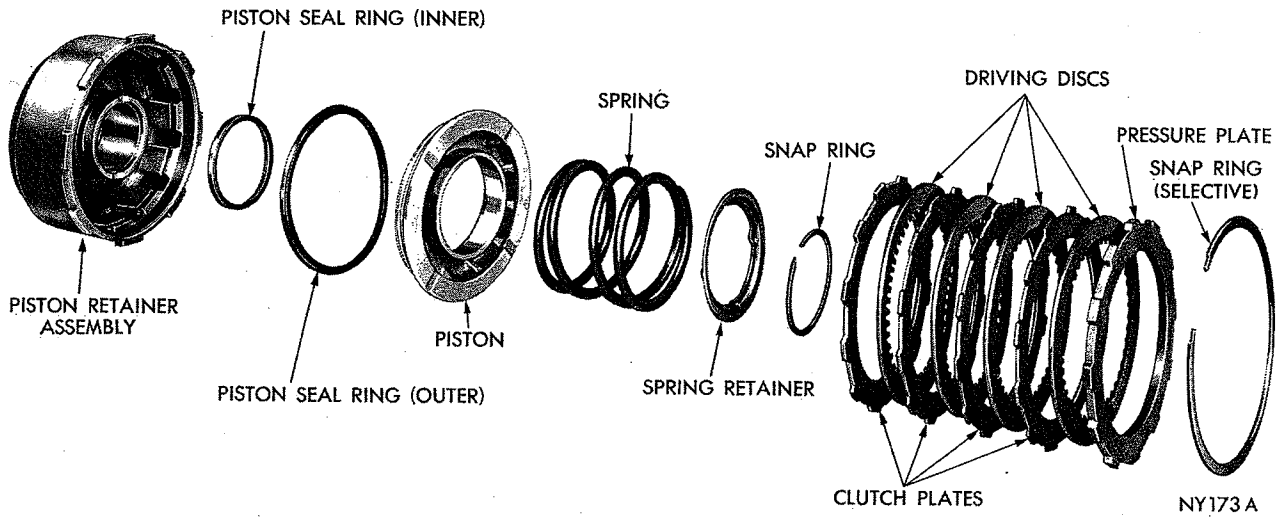


***Fig. 78—Front Clutch Assembly—Disassembled***

MyMopar.com

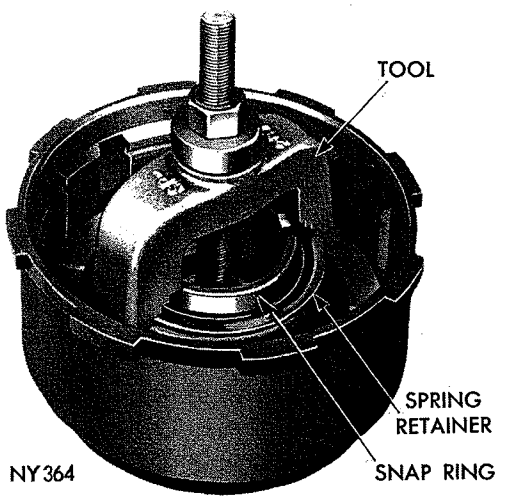


*Fig. 79—Removing or Installing Front Clutch Retainer Snap Ring*

### Inspection

Inspect facing material on all driving discs. Replace discs that are charred, glazed or heavily pitted. Discs should also be replaced if they show evidence of material flaking off or if facing material can be scraped off easily. Inspect driving disc splines for wear or other damage. Inspect steel plate and pressure plate surfaces for burning, scoring or damaged driving lugs. Replace if necessary.

Inspect steel plate lug grooves in clutch retainer for smooth surfaces, plates must travel freely in grooves. Inspect band contacting surface on clutch retainer for scores, **the contact surface should be protected from damage during disassembly and handling.** Note ball check in clutch retainer, make sure ball moves freely. Inspect piston seal ring surfaces in clutch retainer for nicks or deep scratches, light scratches will not interfere with sealing of neoprene rings. Inspect clutch retainer inner bore surface for wear from reaction shaft support seal rings. Inspect clutch retainer bushing for wear or scores.

Inspect inside bore of piston for score marks, if light, remove with crocus cloth. Inspect seal ring grooves for nicks and burrs. Inspect neoprene seal rings for deterioration, wear, and hardness. Inspect piston spring, retainer and snap ring for distortion.

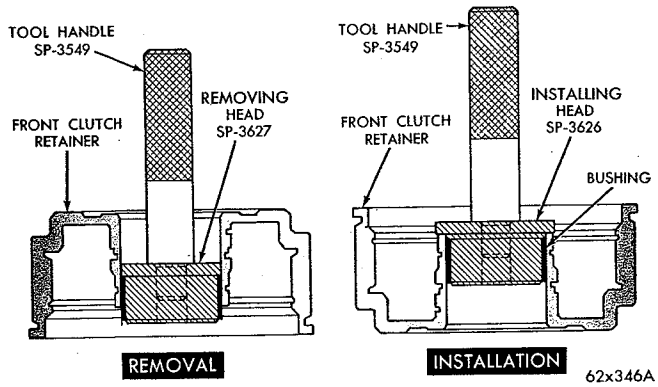


*Fig. 80—Replacing Front Clutch Retainer Bushing*

### Front Clutch Retainer Bushing Replacement

(1) Lay clutch retainer (open end down) on a clean smooth surface and place removing head Tool SP-3627 in the bushing (Fig. 80). Install handle Tool SP-3549 in removing head.

(2) Drive bushing straight down and out of clutch retainer bore. Be careful not to cock tool in the bore.

(3) Lay clutch retainer (open end up) on a clean smooth surface. Slide a new bushing on installing head Tool SP-3626, and start them in clutch retainer bore (Fig. 80).

(4) Install handle Tool SP-3549 in installing head. Drive bushing into clutch retainer until tool bottoms.

(5) Thoroughly clean clutch retainer before assembly and installation.

### Assembly

(1) Lubricate and install inner seal ring on hub of clutch retainer. Make sure lip of seal faces down and is properly seated in the groove.

(2) Lubricate and install outer seal ring on clutch piston, with lip of seal toward bottom of clutch retainer. Place piston assembly in retainer and, with a twisting motion, seat piston in bottom of retainer.

(3) Place spring on piston hub and position spring retainer and snap ring on the spring. Compress spring with Tool C-3575 (Fig. 79), and seat snap ring in hub groove. Remove compressor tool.

(4) Lubricate all clutch plates, install one steel plate followed by a lined plate until all plates are installed. Install pressure plate and snap ring. Make sure snap ring is properly seated.

**NOTE: The A-904-G transmission uses three plates and discs in front clutch for both six cylinder engines. Four plates and discs are used in A-904-LA transmission for 273 cubic inch V-8 engine.**

(5) With front clutch completely assembled, insert a feeler gauge between pressure plate and snap ring (Fig. 81). The clearance should be .056 to .104 inch for the four plate clutch, and .042 to .087 inch for the three plate clutch. If not, install a snap ring of proper thickness to obtain specified clearance.

**NOTE: Snap rings are the same as those used in rear clutch and are available in .060-.062; .068-.070 and .076-.078 inch thickness.**

## FRONT CLUTCH—A-727-A AND B

### Disassembly

Figure 82 shows a disassembled view of the front clutch assembly.

(1) Using a screw driver, remove large snap ring that secures pressure plate in clutch piston retainer. Lift pressure plate and clutch plates out of the retainer.

MyMopar.com

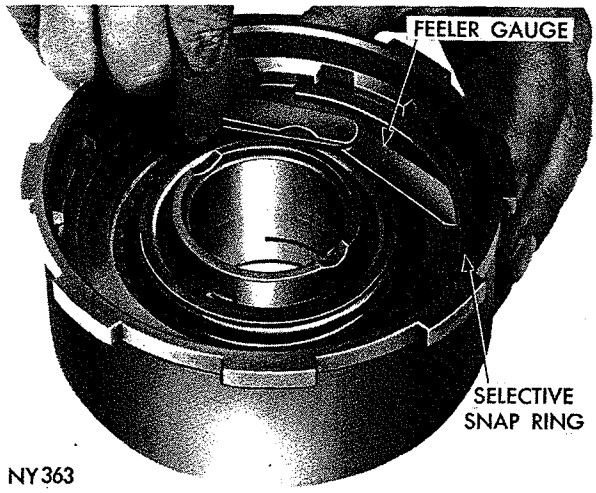


*Fig. 81—Measuring Front Clutch Plate Clearance*

(2) Install compressor, Tool C-3863 over piston spring retainer, (Fig. 83). Compress springs and remove snap ring, then slowly release tool until spring retainer is free of hub. Remove tool, retainer and springs.

(3) Invert clutch retainer assembly and bump it on a wood block to remove piston. Remove seals from piston and clutch retainer hub.

### Inspection

Inspect facing material on all driving discs. Replace discs that are charred, glazed or heavily pitted. Disc should also be replaced if they show evidence of material flaking off or if facing material can be scraped off easily. Inspect driving disc splines for wear or other damage. Inspect steel plate and pressure plate surfaces for burning, scoring or damaged driving lugs. Replace if necessary.

Inspect steel plate lug grooves in clutch retainer for smooth surfaces, plates must travel freely in the grooves. Inspect band contacting surface on clutch retainer for scores. Note ball check in clutch retainer, make sure ball moves freely. Inspect seal surfaces in clutch retainer for nicks or deep scratches, light scratches will not interfere with sealing of neoprene rings. Inspect clutch retainer bushing for wear or scores.

Inspect inside bore of piston for score marks, if light, remove with crocus cloth. Inspect seal grooves for nicks and burrs. Inspect neoprene seals for deterioration, wear, and hardness. Inspect piston springs, retainer and snap ring for distortion.

### Front Clutch Retainer Bushing Replacement

(1) Lay clutch retainer (open end down) on a clean smooth surface and place removing head Tool SP-3629 in the bushing. Install handle Tool SP-3549 in removing head (Fig. 84).

(2) Drive bushing straight down and out of clutch retainer bore. Be careful not to cock tool in the bore.

(3) Lay clutch retainer (open end up) on a clean smooth surface. Slide a new bushing on installing head Tool SP-3628, and start them in clutch retainer bore.

(4) Install handle Tool SP-3549 in the installer (Fig. 84). Drive bushing into clutch retainer until tool bottoms.

(5) Thoroughly clean clutch retainer before assembly and installation.

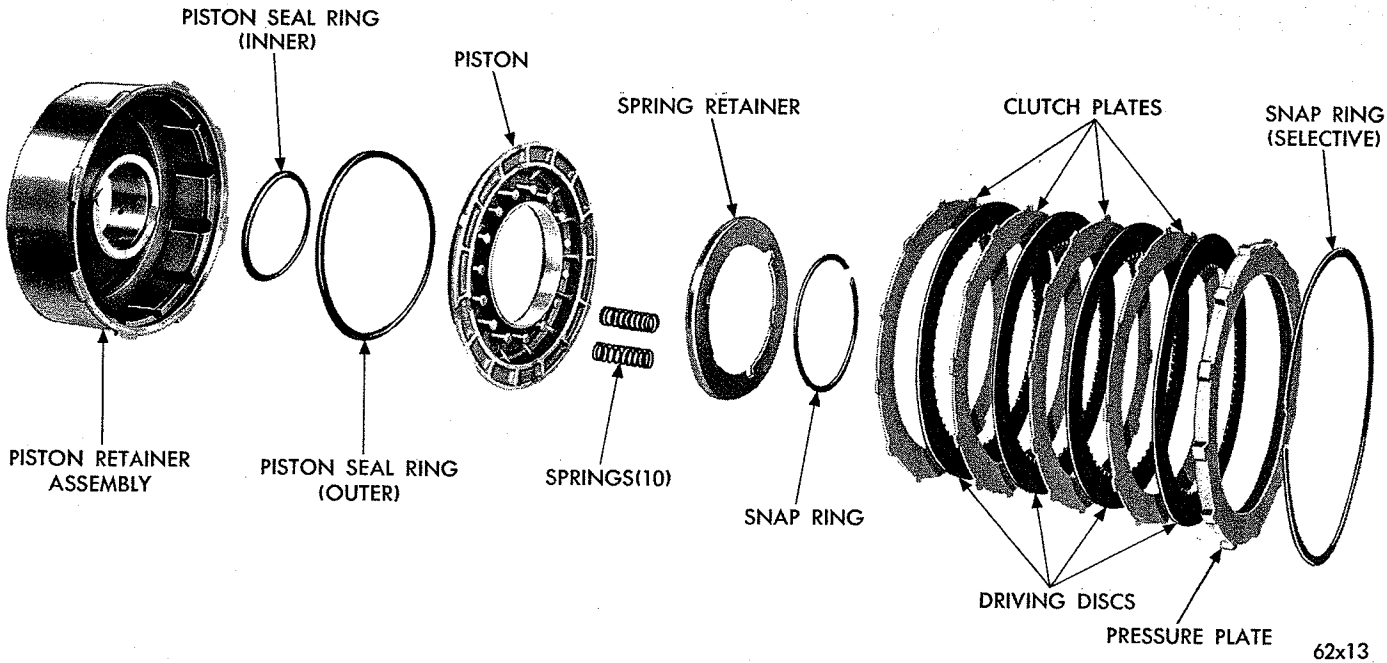


*Fig. 82—Front Clutch Assembly—Disassembled*

MyMopar.com

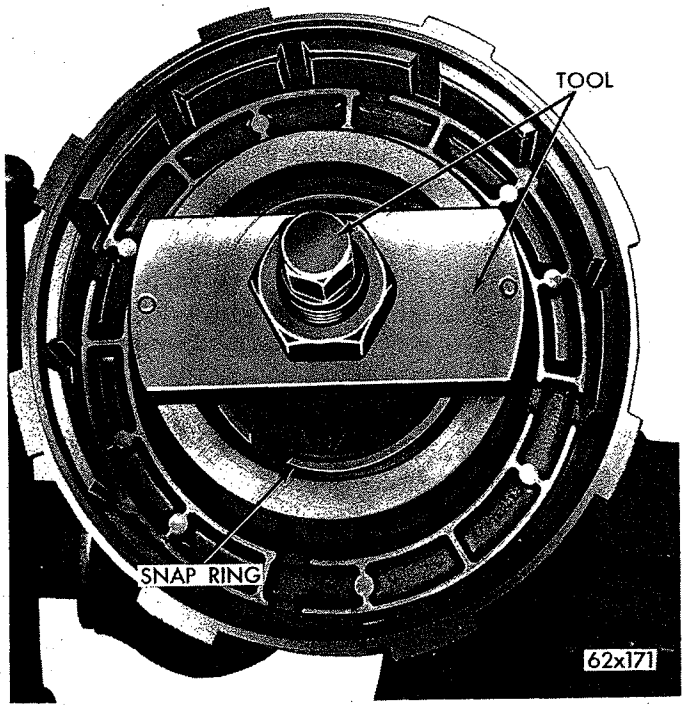


*Fig. 83—Removing or Installing Front Clutch Retainer Snap Ring*

### Assembly

(1) Lubricate and install inner seal on hub of clutch retainer. Make sure lip of seal faces down and is properly seated in the groove.

(2) Install outer seal on the clutch piston, with lip of seal toward bottom of clutch retainer. Apply a coating of wax type lubricant or Door Ease to outer edge of seals for easier installation of piston assembly. Place piston assembly in retainer and carefully seat piston in bottom of retainer.

(3) Place the 10 springs on piston hub exactly as shown in Figure 85. Position spring retainer and snap ring on the springs. Compress springs with Tool C-3863 (Fig. 83), and seat snap ring in hub groove. Remove compressor tool.

(4) Lubricate all clutch plates, install one steel plate followed by a lined plate until all plates are installed. Install pressure plate and snap ring. Make sure snap ring is properly seated.

(5) With front clutch completely assembled, insert a feeler gauge between pressure plate and snap ring (Fig. 86). The clearance should be .024 to .123 inch. If not, install a snap ring of proper thickness to obtain specified clearance.

**NOTE: Snap rings are the same as those used in rear clutch and are available in .060-.062, .074-.076 and .088-.090 inch thickness.**

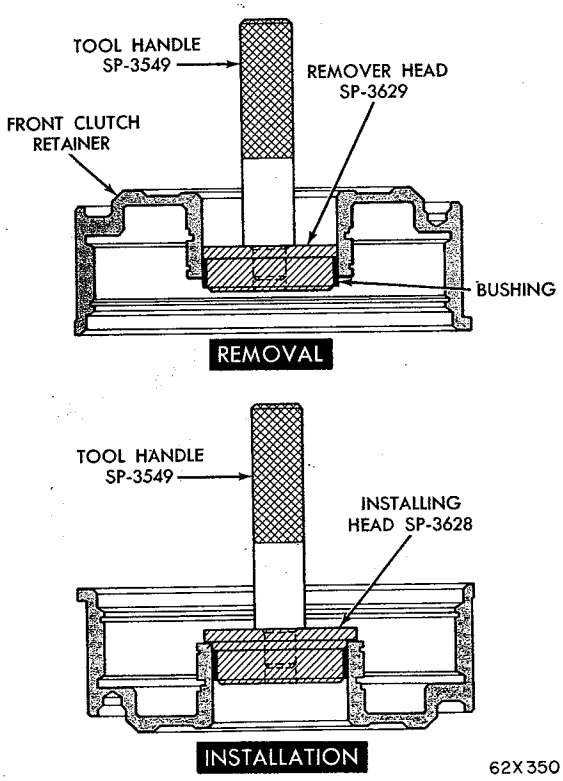


*Fig. 84—Replacing Front Clutch Retainer Bushing*

## REAR CLUTCH—A-904-G AND A-904-LA

### Disassembly

Figure 87 shows a disassembled view of the rear clutch assembly.

(1) Using a screw driver, remove large snap ring that secures pressure plate in clutch piston retainer. Lift pressure plate, clutch plates, and inner pressure plate out of the retainer.

(2) Carefully pry one end of wave spring out of its groove in clutch retainer, then remove wave spring, spacer ring and clutch piston spring.

(3) Invert clutch piston retainer assembly and

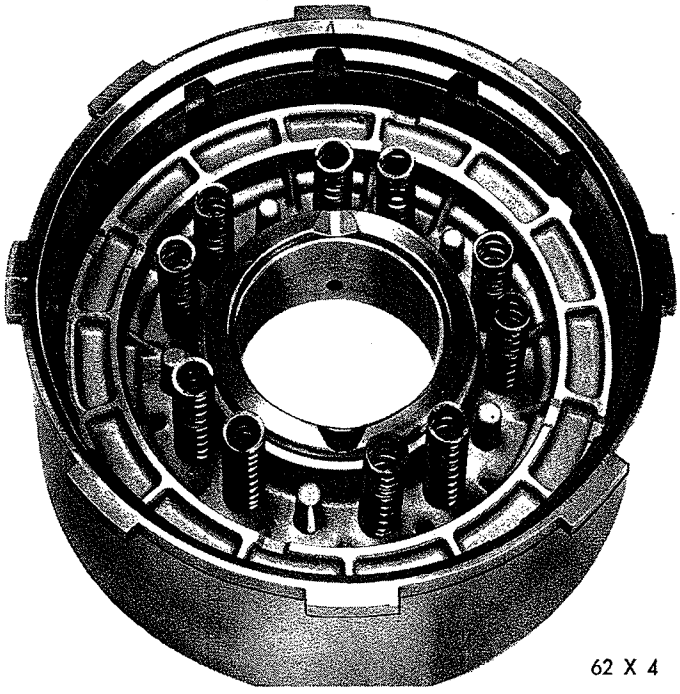


*Fig. 85—Front Clutch Piston Return Springs—Location*

MyMopar.com

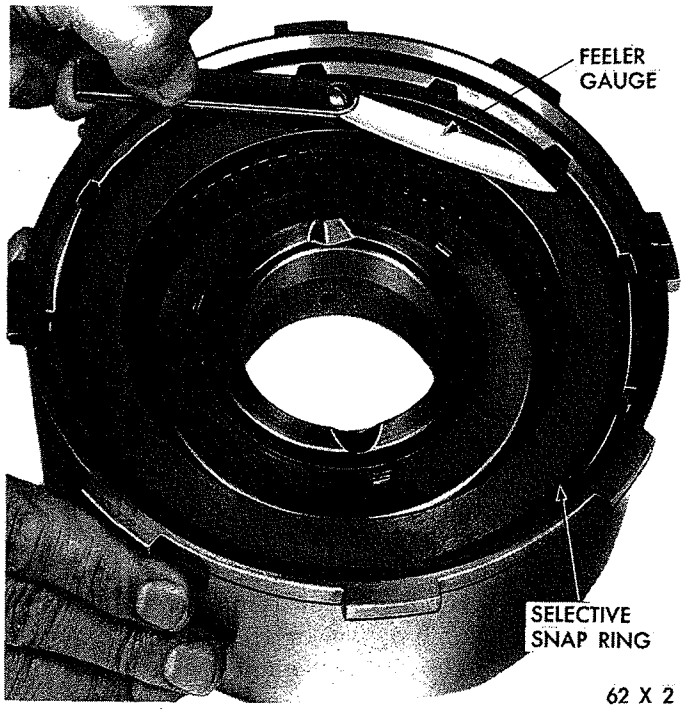


***Fig. 86—Measuring Front Clutch Plate Clearance***

bump it on a wood block to remove piston. Remove seals from piston.

(4) If necessary, remove snap ring and press input shaft from piston retainer.

### Inspection

Inspect facing material on all driving discs. Replace discs that are charred, glazed or heavily pitted. Discs should also be replaced if they show evidence of material flaking off or if facing material can be scraped off easily. Inspect driving disc splines for wear or other damage. Inspect steel plate and pressure plate surface for burning, scoring or damaged driving lugs. Replace if necessary. Inspect plates and discs for flatness, they must not be warped or cone-shaped.

Inspect steel plate lug grooves in clutch retainer for smooth surfaces, plates must travel freely in the grooves. Note ball check in clutch retainer, make sure ball moves freely. Inspect seal ring surfaces in clutch retainer for nicks or deep scratches, light scratches will not interfere with sealing of the neoprene rings. Inspect neoprene seal rings for deterioration, wear and hardness. Inspect piston spring, wave spring, and spacer for distortion or breakage.

Inspect interlocking seal rings (Fig. 87) on input shaft for wear or broken locks, make sure they turn freely in the grooves. Do not remove rings unless conditions warrant. Inspect rear clutch to front clutch thrust washer for wear. Washer thickness should be .043 to .045 inch, replace if necessary.

### Assembly

(1) If removed, press input shaft into piston retainer and install snap ring.

(2) Lubricate and install inner and outer seal rings on clutch piston. Make sure lip of seals face toward head of clutch retainer, and are properly seated in piston grooves.

(3) Place piston assembly in retainer and, with a twisting motion, seat piston in bottom of retainer.

(4) Place clutch piston spring and spacer ring on top of piston in clutch retainer, make sure spring and spacer ring are positioned in the retainer recess. Start one end of wave spring in retainer groove (Fig. 88), then progressively push or tap spring into place making sure it is fully seated in the groove.

(5) Install inner pressure plate in clutch retainer

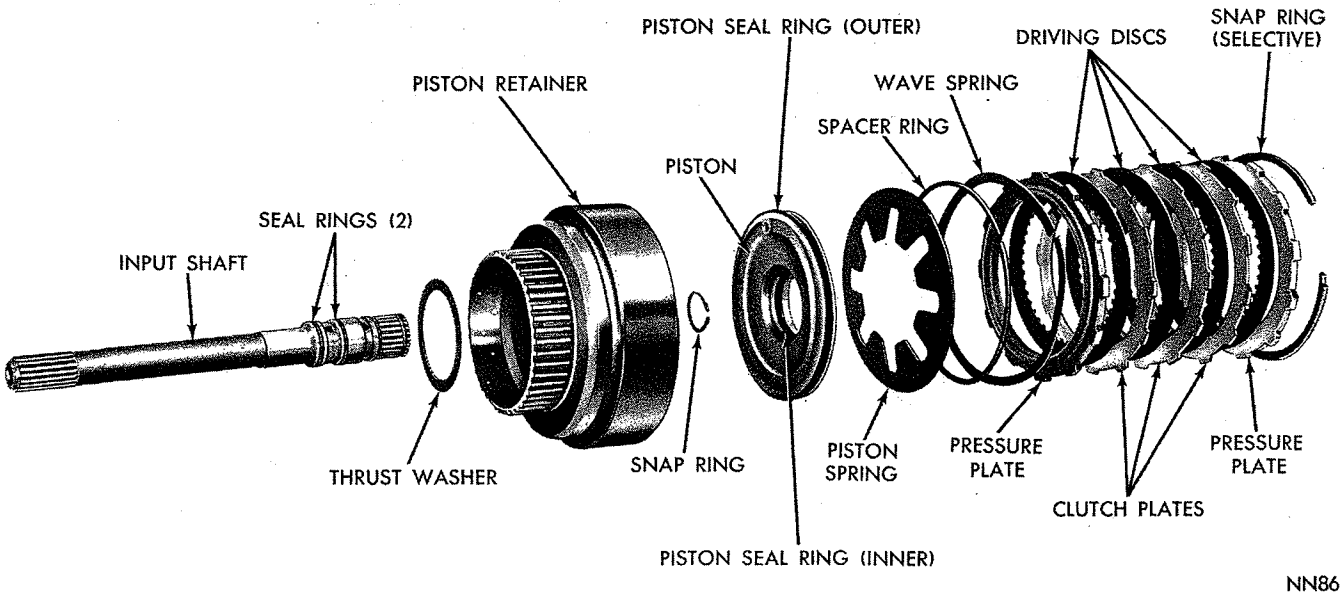


***Fig. 87—Rear Clutch Assembly—Disassembled***

MyMopar.com

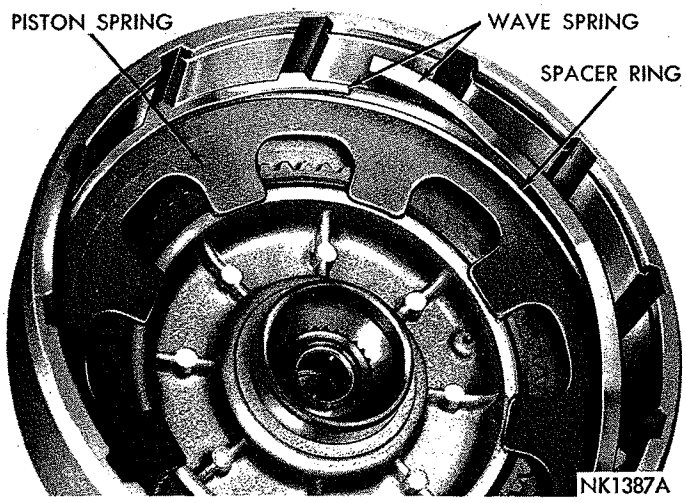


*Fig. 88—Installing Rear Clutch Spring, Spacer Ring and Wave Spring*

with raised portion of plate resting on the spring.

(6) Lubricate all clutch plates, install one lined plate followed by a steel plate until all plates are installed. Install outer pressure plate and snap ring.

**NOTE: The A-904-G transmission uses two plates and three discs in rear clutch for both six cylinder engines. Three plates and four discs are used in the A-904-LA transmission for the 273 cubic inch V-8 engine.**

(7) Measure rear clutch plate clearance by having an assistant press down firmly on outer pressure plate, then insert a feeler gauge between the plate and snap ring (Fig. 89). The clearance for the four disc clutch should be between .032-.055 inch, and between .026-.055 inch for the three disc clutch. If not, install a snap ring of proper thickness to obtain specified clearance. Low limit clearance is desirable. **Rear clutch plate clearance is very important in obtaining proper clutch operation. Clearance can be adjusted by the use of various thickness outer snap rings. Snap rings are available in .060-.062, .068-.070 and .076-.078 inch thickness.**

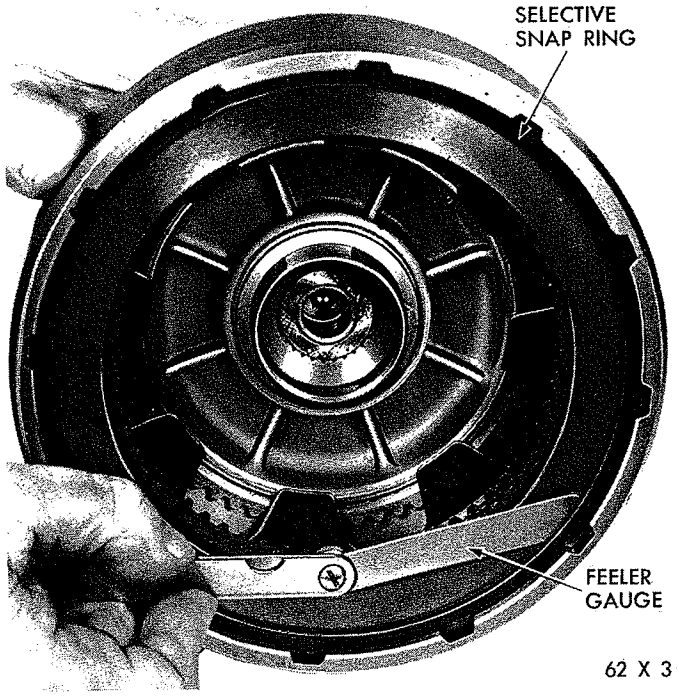


*Fig. 89—Measuring Rear Clutch Plate Clearance*

## REAR CLUTCH—A-727-A AND B

### *Disassembly*

Figure 90 shows a disassembled view of the rear clutch assembly.

(1) Use a screw driver to remove large snap ring that secures pressure plate in clutch retainer. Lift pressure plate, clutch plates, and inner pressure plate out of the retainer.

(2) Carefully pry one end of wave spring out of its groove in clutch retainer, then remove wave spring, spacer ring and clutch piston spring.

(3) Invert clutch piston retainer assembly and bump it on a wood block to remove piston. Remove seals from the piston.

(4) If necessary, remove snap ring and press input shaft from clutch piston retainer.

### *Inspection*

Inspect facing material on all driving discs. Replace discs that are charred, glazed or heavily pitted. Discs should also be replaced if they show evidence of material flaking off or if facing material can be scraped off easily. Inspect driving disc splines for wear or other damage. Inspect steel plate and pressure plate surfaces for burning, scoring or damaged driving lugs. Replace if necessary.

Inspect steel plate lug grooves in clutch retainer for smooth surfaces, plates must travel freely in the grooves. Note ball check in the piston, make sure ball moves freely. Inspect seal surfaces in clutch retainer for nicks or deep scratches, light scratches will not interfere with sealing of neoprene seals. Inspect neoprene seals for deterioration, wear, and hardness. Inspect piston spring, wave spring, and spacer for distortion or breakage.

Inspect interlocking seal rings (Fig. 90) on input shaft for wear or broken locks, make sure they turn freely in the grooves. Do not remove rings unless conditions warrant. Inspect bushing in input shaft for wear or scores. Inspect rear clutch to front clutch thrust washer for wear. Washer thickness should be .061 to .063 inch, replace if necessary.

### *Input Shaft Bushing Replacement*

(1) Clamp input shaft in a vise with soft jaws, being careful not to clamp on seal ring lands or bearing journals.

(2) Assemble remover Tool SP-3630, cup Tool SP-3633, and hex nut Tool SP-1191 (Fig. 91).

MyMopar.com

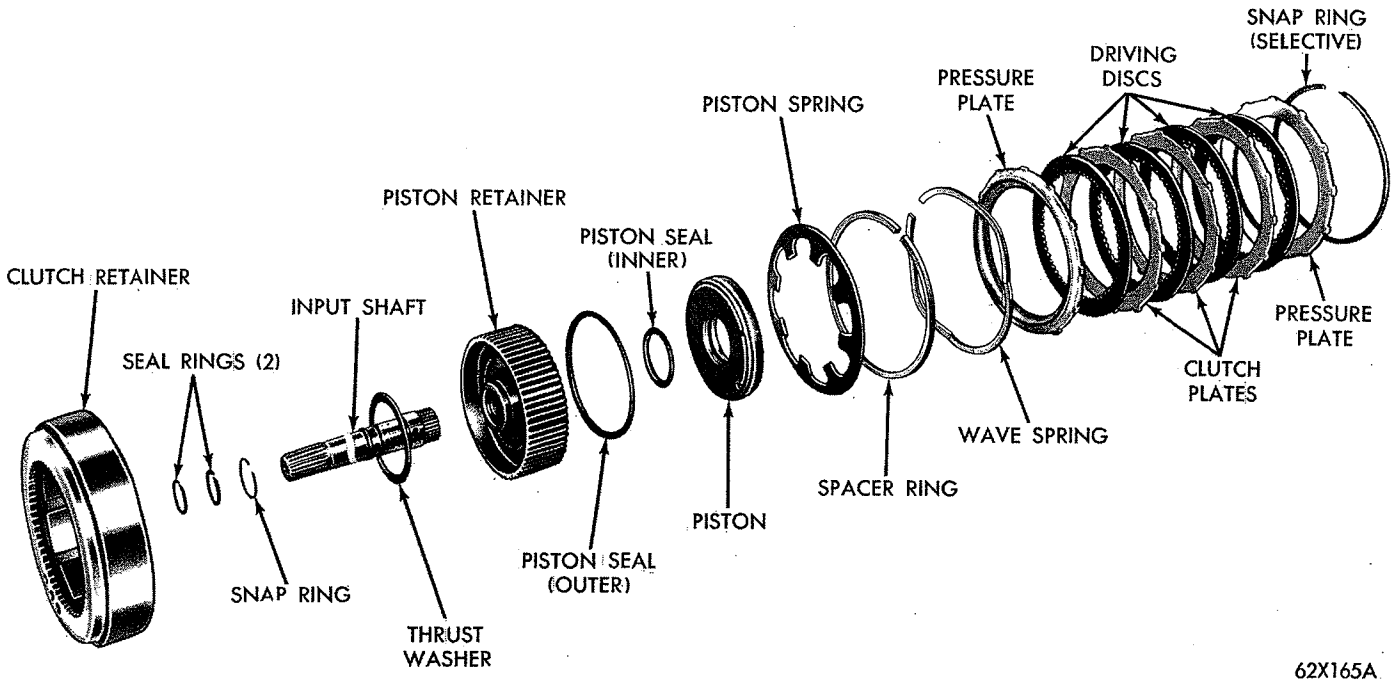


***Fig. 90—Rear Clutch Assembly—Disassembled***

(3) With cup held firmly against clutch piston retainer, thread remover into bushing as far as possible by hand.

(4) Using a wrench, screw remover into bushing 3 to 4 additional turns to firmly engage threads in the bushing.

(5) Turn hex nut down against cup to pull bushing from input shaft.

(6) Thoroughly clean input shaft to remove chips made by remover threads. Make certain small lubrication hole next to ball in end of shaft is not plugged with chips. Be sure no chips are lodged next to the steel ball.

(7) Slide a new bushing on installing head Tool SP-3636, and start them in the bore of input shaft.

(8) Stand input shaft upright on a clean smooth surface and install handle Tool SP-3549 in the installing head (Fig. 91). Drive bushing into shaft until tool bottoms.

(9) Thoroughly clean input shaft and clutch piston retainer before assembly and installation.

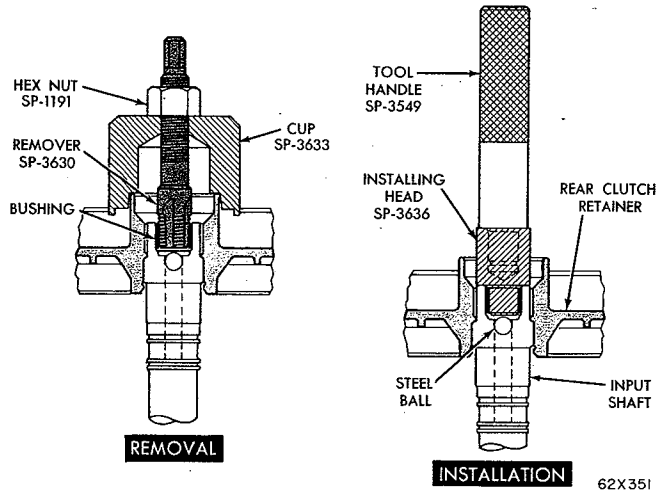


***Fig. 91—Replacing Input Shaft Bushing***

## Assembly

(1) If removed, press input shaft into clutch piston retainer and install snap ring.

(2) Lubricate and install inner and outer seal rings on clutch piston. Make sure lip of seals face toward head of clutch retainer, and are properly seated in piston grooves.

(3) Place piston assembly in retainer and, with a twisting motion, seat piston in bottom of the retainer.

(4) Position clutch retainer over piston retainer splines and support the assembly so clutch retainer remains in place.

(5) Place clutch piston spring and spacer ring on top of piston in clutch retainer, make sure spring and spacer ring are positioned in the retainer recess. Start one end of wave spring in retainer groove (Fig. 88), then progressively push or tap spring into place making sure it is fully seated in the groove.

(6) Install inner pressure plate in clutch retainer with raised portion of plate resting on the spring.

(7) Lubricate all clutch plates, install one lined plate followed by a steel plate until all plates are installed. Install outer pressure plate and snap ring.

(8) Measure rear clutch plate clearance by having an assistant press downward firmly on outer pressure

MyMopar.com

plate, then insert a feeler gauge between the plate and snap ring (Fig. 89). The clearance should be between .037 to .060 inch. If not, install a snap ring of proper thickness to obtain specified clearance. Low limit clearance is desirable. **Rear clutch plate clearance is very important in obtaining proper clutch operation. The clearance can be adjusted by the use of various thickness outer snap rings. Snap rings are available in .060-.062, .074-.076 , .088-.090 and .106-.108 inch thickness.**

## PLANETARY GEAR ASSEMBLIES, SUN GEAR AND DRIVING SHELL—A-904-G AND A-904-LA

Measure end play of planetary gear assemblies, sun gear and driving shell before removing these parts from output shaft. With assembly in an upright position, push rear annulus gear support downward on the output shaft. Insert a feeler gauge between rear annulus gear support hub and shoulder on output shaft. (Fig. 92). The clearance should be .006 to .033 inch. If clearance exceeds specifications, replace thrust washers and/or necessary parts.

### *Disassembly*

(1) Remove selective thrust washer from forward end of output shaft (Fig. 93).

(2) Remove selective snap ring from forward end of output shaft, then slide front planetary assembly off the shaft.

(3) Remove snap ring and thrust washer from forward hub of front planetary gear assembly, slide front annulus gear and support off planetary gear set (Fig. 93). Remove thrust washer from rear side of planetary gear set. If necessary, remove snap ring from front of annulus gear to separate support from annulus gear.

(4) Slide sun gear, driving shell and rear planetary assembly off the output shaft.

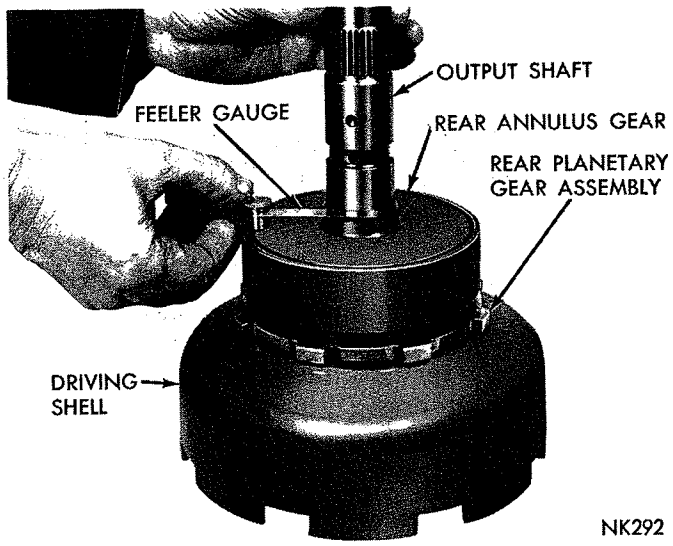


***Fig. 92—Measuring End Play of Planetary Gear Assembly, Sun Gear and Driving Shell***

(5) Lift sun gear and driving shell off rear planetary assembly. Remove snap ring and steel washer from sun gear (rear side of driving shell). Slide sun gear out of driving shell, and remove snap ring and steel washer from opposite end of sun gear if necessary.

(6) Remove thrust washer from forward side of rear planetary assembly and remove planetary gear set from rear annulus gear. If necessary, remove snap ring from rear of annulus gear to separate support from annulus gear.

### *Inspection*

Inspect bearing surfaces on output shaft for nicks, burrs, scores or other damage. Light scratches, small nicks or burrs can be removed with crocus cloth or a fine stone. Inspect speedometer drive gear for any nicks or burrs, and remove with a sharp edged stone. Make sure all oil passages in shaft are open and clean.

Inspect bushings in sun gear for wear or scores, replace sun gear assembly if bushings are damaged. Inspect all thrust washers for wear and scores, replace if damaged or worn below specifications. Inspect thrust faces of planetary gear carriers for wear, scores or other damage, replace as required. Inspect planetary gear carrier for cracks and pinions for broken or worn gear teeth, and for broken pinion shaft lock pins. Inspect annulus gear and driving gear teeth for damage. Replace distorted lock rings.

### *Assembly*

Refer to Figure 93 for parts reference.

(1) Place rear annulus gear support in annulus gear and install snap ring.

(2) Position rear planetary gear assembly in rear annulus gear and place thrust washer on front side of planetary gear assembly.

(3) Insert output shaft in rear opening of rear annulus gear. Carefully work shaft through annulus gear support and planetary gear assembly. Make sure shaft splines are fully engaged in splines of annulus gear support.

(4) Install steel washer and snap ring on one end of sun gear. Insert sun gear through front side of driving shell, install rear steel washer and snap ring.

(5) Carefully slide driving shell and sun gear assembly on the output shaft, engaging sun gear teeth with rear planetary pinion teeth.

(6) Place front annulus gear support in the annulus gear and install snap ring.

(7) Position front planetary gear assembly in front annulus gear, place thrust washer over planetary gear assembly hub and install snap ring. Position thrust washer on rear side of planetary gear assembly.

(8) Carefully work front planetary and annulus gear assembly on output shaft, meshing planetary pinions with sun gear teeth.

MyMopar.com

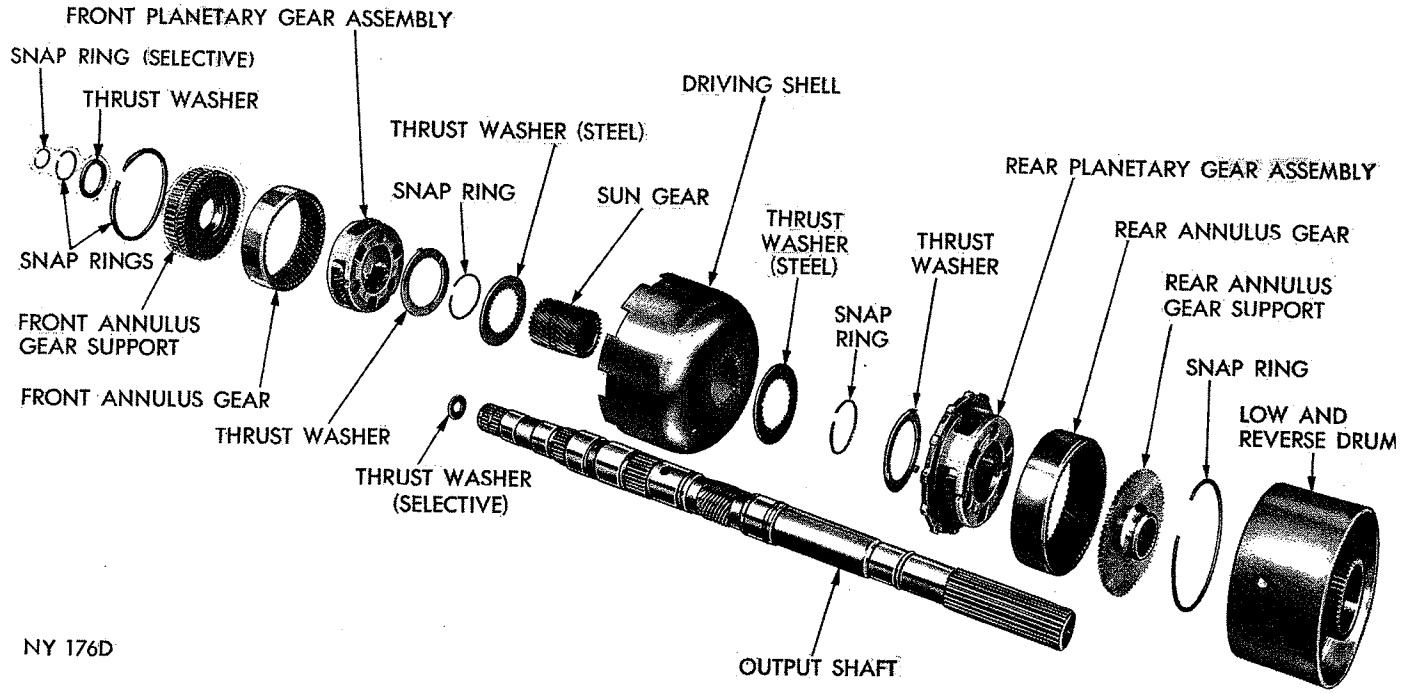


***Fig. 93—Planetary Gear Assemblies, Sun Gear, Driving Shell, Low-Reverse Drum and Output Shaft—Disassembled***

(9) With all components properly positioned, install selective snap ring on front end of output shaft. Remeasure end play of the assembly.

**NOTE: The clearance can be adjusted by the use of various thickness snap rings. Snap rings are available in .040-.044, .048-.052 and .059-.065 inch thickness.**

## PLANETARY GEAR ASSEMBLIES, SUN GEAR AND DRIVING SHELL—A-727-A AND B

Measure end play of planetary gear assemblies, sun gear and driving shell before removing these parts from output shaft. With assembly in an upright position, push rear annulus gear support downward on output shaft. Insert a feeler gauge between rear annulus gear support hub and shoulder on output shaft (Fig. 92). The clearance should be .010 to .039 inch. If clearance exceeds specifications, replace thrust washers and/or necessary parts.

### *Disassembly*

(1) Remove thrust washer from forward end of

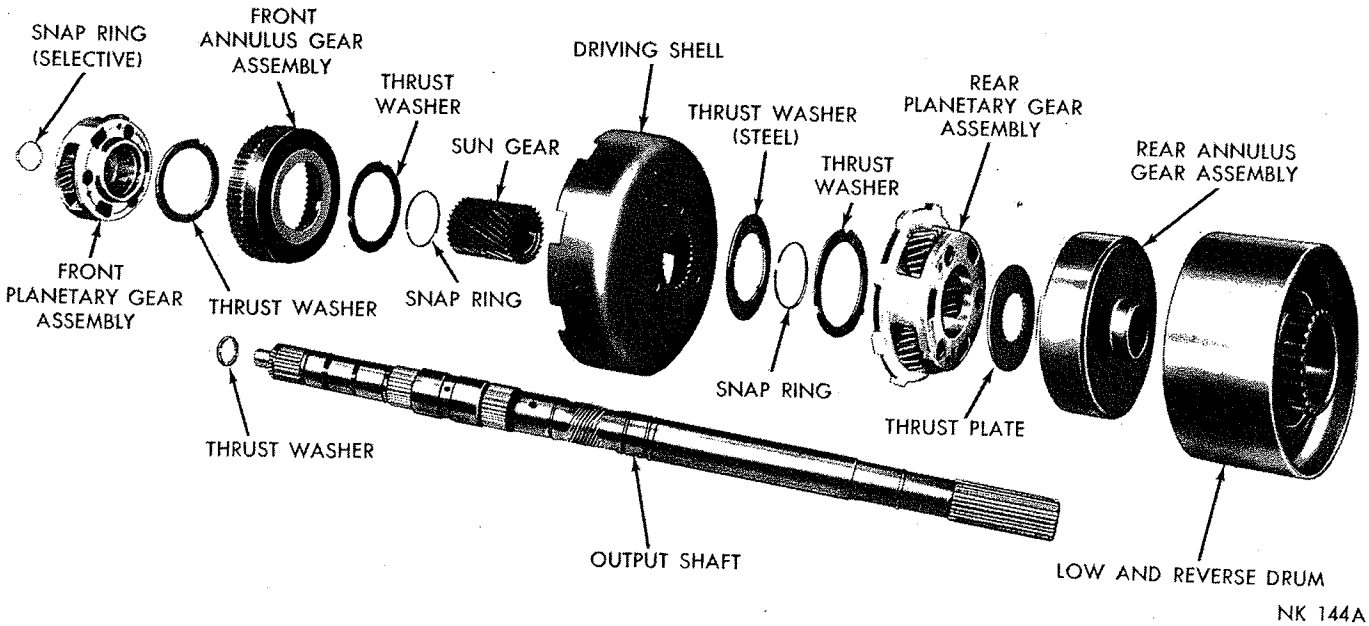


***Fig. 94—Planetary Gear Assemblies, Sun Gear, Driving Shell, Low-Reverse Drum and Output Shaft—Disassembled***

MyMopar.com

output shaft (Fig. 94).

(2) Remove selective snap ring from forward end of output shaft, then slide front planetary assembly off the shaft.

(3) Slide front annulus gear off planetary gear set (Fig. 94). Remove thrust washer from rear side of planetary gear set.

(4) Slide sun gear, driving shell and rear planetary assembly off output shaft.

(5) Lift sun gear and driving shell off rear planetary gear assembly. Remove thrust washer from inside the driving shell. Remove snap ring and steel washer from sun gear (rear side of driving shell) and slide sun gear out of the shell. Remove front snap ring from sun gear if necessary. Note that front end of sun gear is longer than rear.

(6) Remove thrust washer from forward side of rear planetary gear assembly, remove planetary gear set and thrust plate from rear annulus gear.

### *Inspection*

Inspect bearing surfaces on output shaft for nicks, burrs, scores or other damage. Light scratches, small nicks or burrs can be removed with crocus cloth or a fine stone. Inspect speedometer drive gear for any nicks or burrs, and remove with a sharp edged stone. Make sure all oil passages in shaft are open and clean.

Inspect bushings in sun gear for wear or scores, replace sun gear assembly if bushings are damaged. Inspect all thrust washers for wear and scores, replace if damaged or worn below specifications. Inspect thrust faces of planetary gear carriers for wear, scores or other damage, replace as required. Inspect planetary gear carrier for cracks and pinions for broken or worn gear teeth and for broken pinion shaft lock pins. Inspect annulus gear and driving gear teeth for damage. Replace distorted lock rings.

### *Assembly*

Refer to Figure 94 for parts reference.

(1) Install rear annulus gear on the output shaft. Apply a thin coat of grease on thrust plate, place it on the shaft and in the annulus gear making sure teeth are over the shaft splines.

(2) Position rear planetary gear assembly in the rear annulus gear. Place thrust washer on front side of planetary gear assembly.

(3) Install snap ring in front groove of sun gear (long end of gear). Insert sun gear through front side of driving shell, install rear steel washer and snap ring.

(4) Carefully slide driving shell and sun gear assembly on output shaft, engaging sun gear teeth with rear planetary pinion teeth. Place thrust washer inside the front driving shell.

(5) Place thrust washer on rear hub of front planetary gear set, then slide assembly into front annulus gear.

(6) Carefully work front planetary and annulus gear assembly on output shaft, meshing planetary pinions with the sun gear teeth.

(7) With all components properly positioned, install selective snap ring on front end of output shaft. Remeasure end play of the assembly. **The clearance can be adjusted by the use of various thickness snap rings. Snap rings are available in .048-.052, .055-.059 and .062-.066 inch thickness.**

## OVERRUNNING CLUTCH

### *Inspection*

Inspect clutch rollers for smooth round surfaces, they must be free of flat spots and chipped edges. Inspect roller contacting surfaces in the cam and race for brinelling. Inspect roller springs for distortion, wear or other damage.

**A-727-A and B:** Inspect cam set screw for tightness. If loose, tighten and restake the case around screw.

### *Overrunning Clutch Cam Replacement—A-904-G and A-904-LA*

If overrunning clutch cam or spring retainer are found damaged, they can be replaced with a service replacement cam, spring retainer, and retaining bolts (Fig. 95). The service parts are retained in the case with bolts instead of rivets. To install, proceeds as follows:

(1) Remove four bolts securing output shaft support to rear of the transmission case. Drive support rearward out of the case with a wood block and hammer.

(2) Center punch the rivets **exactly** in center of each rivet head (Fig. 96).

(3) Drill through each rivet head with a 3/8 inch drill. **Be careful not to drill into the transmission case.** Chip off rivet heads with a small chisel, then drive rivets and cam from the case with a blunt punch of proper size.

(4) Carefully enlarge rivet holes in the case with a 17/64 inch drill. Remove all chips and foreign matter

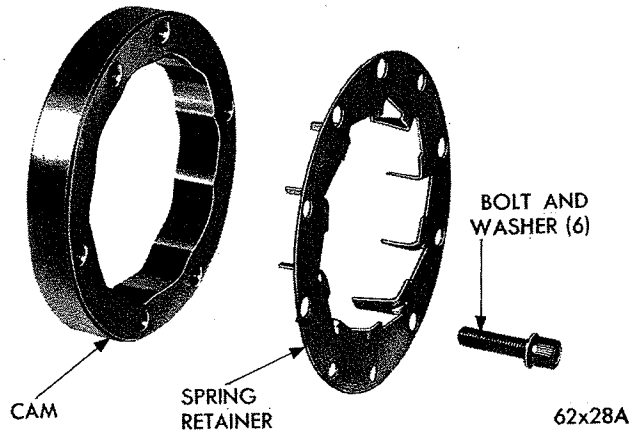


***Fig. 95—Overrunning Clutch Service Replacement Cam (A-904-G and A-904-LA)***

MyMopar.com

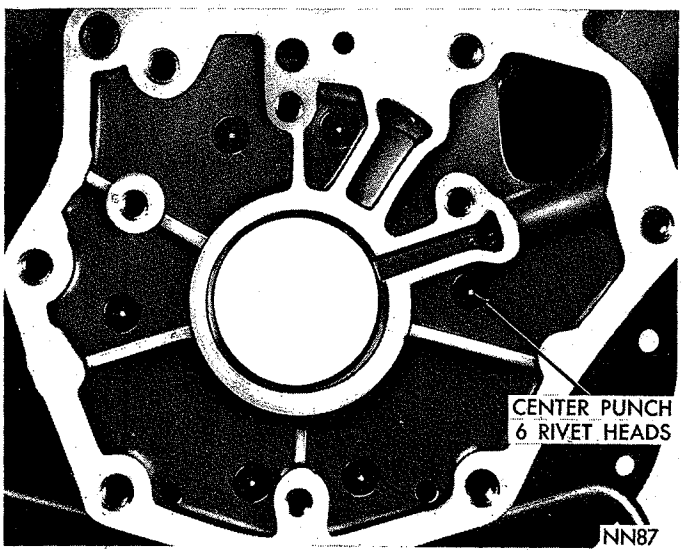


*Fig. 96—Center Punch Rivet Heads*

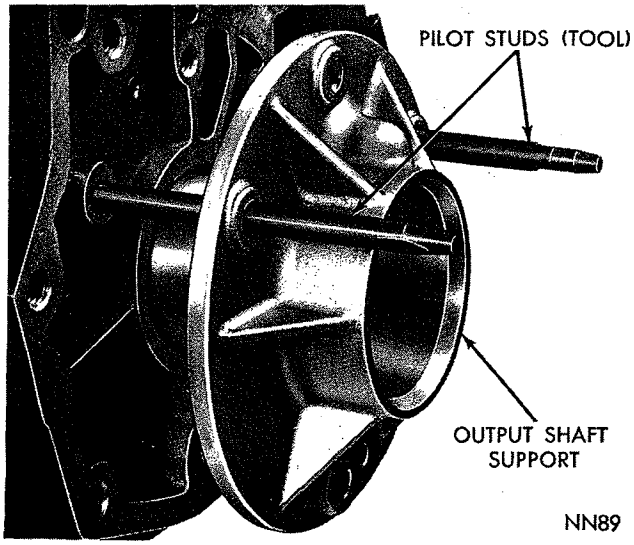


*Fig. 98—Installing Output Shaft Support*

from the case, make sure cam area is free of chips and burrs.

(5) To install, position cam and roller spring retainer in the case. Align cam bolt holes with holes in the case, then thread all five retaining bolt and washer assemblies into cam a few turns. The belleville washers must be installed so its inner diameter is coned toward the bolt head (Fig. 97).

(6) Tap cam firmly into the case if necessary. Draw retaining bolts down evenly, then tighten to 100 inch-pounds.

(7) Screw two pilot studs, Tool C-3288 into the case (Fig. 98). Install output shaft support by driving it firmly into the case with a wood block and hammer. Install and tighten retaining bolts to 140 inch-pounds.

### *Overrunning Clutch Cam Replacement—A-727-A and B*

If overrunning clutch cam and/or roller spring retainer are found damaged, replace cam and spring retainer in the following manner:

(1) Remove set screw from the case below clutch cam.

(2) Remove four bolts securing output shaft support to rear of transmission case. Insert a punch through bolt holes and drive cam from the case (Fig. 99). Alternate punch from one bolt hole to another so cam will be driven evenly from the case.

**IMPORTANT: The output shaft support must be in the case to install the overrunning clutch cam.**

**If support requires replacement, drive it rearward out of the case with a wood block and hammer. To install, screw two C-3288 pilot studs into the case (Fig. 100), then drive support firmly into the case with a wood block and hammer.**

(3) Clean all burrs and chips from cam area in the case.

(4) Place spring retainer on the cam, making sure retainer lugs snap firmly into notches on the cam.

(5) Position cam in the case with cam serrations

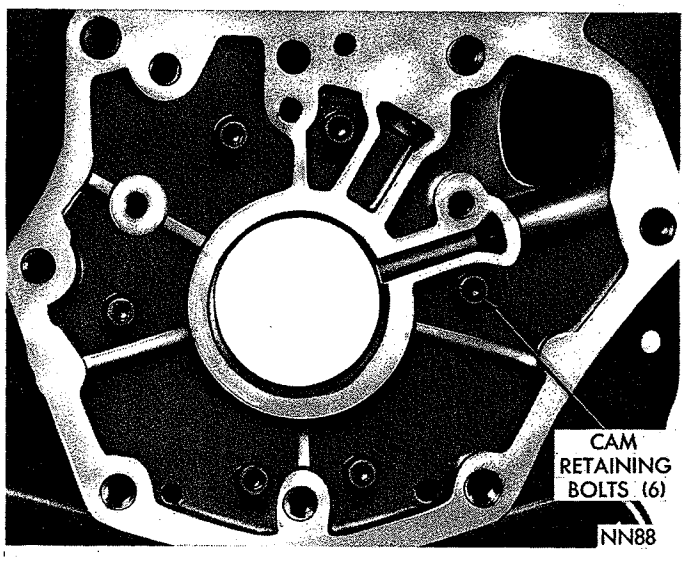


*Fig. 97—Cam Retaining Bolts Installed*

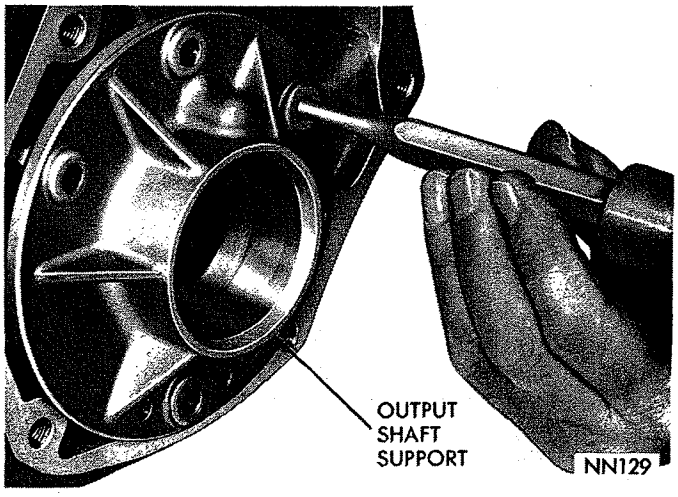


*Fig. 99—Removing Overrunning Clutch Cam (A-727-A and B)*

MyMopar.com

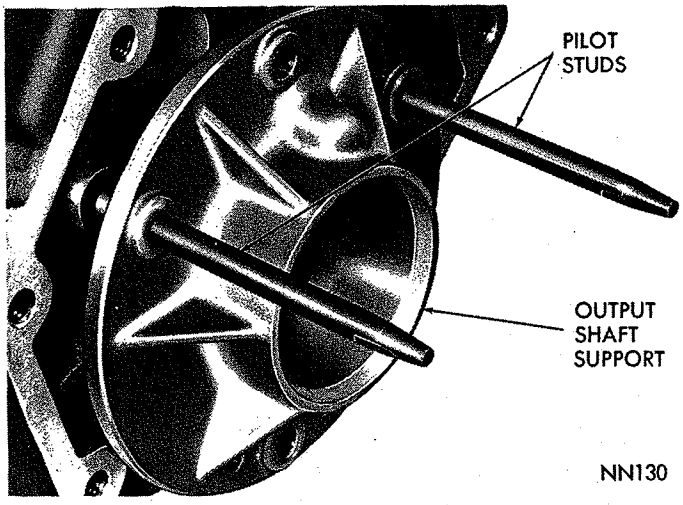


*Fig. 100—Installing Output Shaft Support (A-727-A and B)*

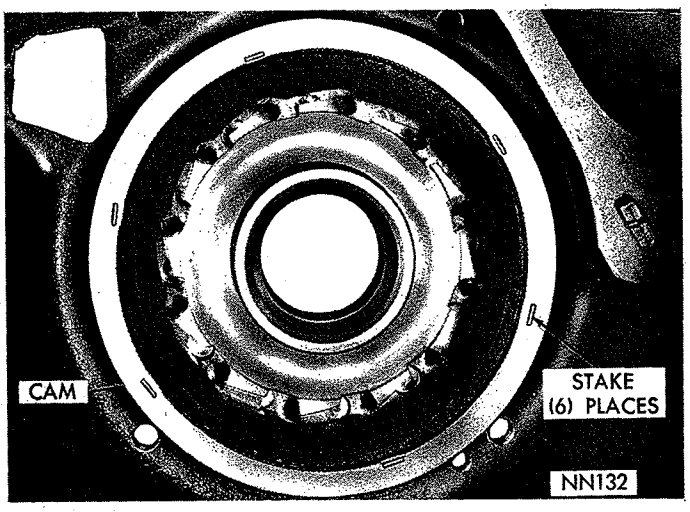


*Fig. 102—Overrunning Clutch Cam Staked (A-727-A and B)*

aligned with those in the case. Tap cam **evenly** into the case as far as possible with a soft mallet.

(6) Install Tool C-3863 and Adapter SP-5124 as shown in Figure 101, tighten nut on tool to seat cam into the case. Make sure cam is firmly bottomed, then install cam retaining set screw. Stake the case around set screw to prevent it coming loose.

(7) Remove cam installing tool. Install and tighten support retaining screws to 140 inch-pounds. Stake the case around cam in six places with a blunt chisel (Fig. 102).

## KICKDOWN SERVO AND BAND

### *Inspection*

Figure 103 shows a disassembled view of the kickdown servo assembly.

**NOTE: The larger outer spring shown in Figure 103 is not used in the A-904-G and A-904-LA transmissions. Also, it is not used in maximum performance vehicles with A-727-A and B transmissions.**

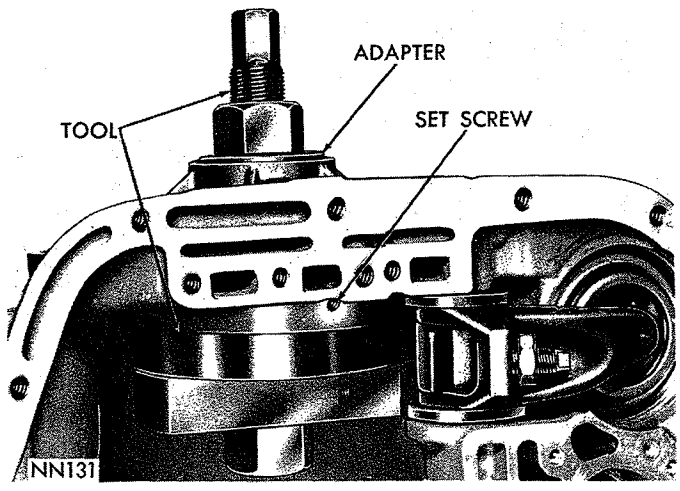


*Fig. 101—Installing Overrunning Clutch Cam (A-727-A and B)*

Inspect piston and guide seal rings for wear, and make sure they turn freely in the grooves. It is not necessary to remove seal rings unless conditions warrant. Inspect piston for nicks, burrs, scores and wear. Inspect piston bore in the case for scores or other damage. Inspect fit of guide on piston rod. Inspect piston spring for distortion.

Inspect band lining for wear and bond of lining to the band. Inspect lining for black burn marks, glazing, non-uniform wear pattern and flaking. If lining is worn so grooves are not visible at ends or any portion of the bands, replace the band. Inspect band for distortion or cracked ends.

## LOW—REVERSE SERVO AND BAND

### *Disassembly*

(1) Remove snap ring from piston and remove the piston plug and spring (Fig. 104).

### *Inspection*

Inspect seal for deterioration, wear and hardness. Inspect piston and piston plug for nicks, burrs, scores and wear; piston plug must operate freely in the piston. Inspect piston bore in the case for scores or other damage. Inspect springs for distortion.

Inspect band lining for wear and bond of lining to

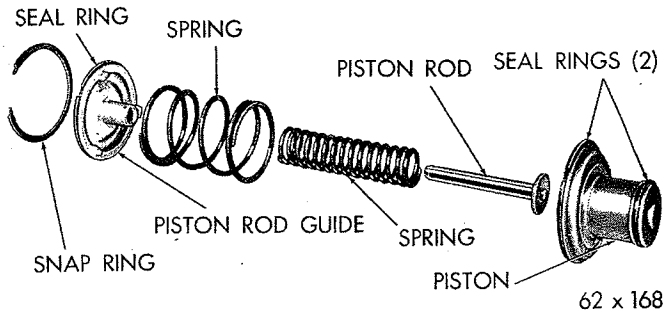


*Fig. 103—Kickdown Servo—Disassembled*

MyMopar.com

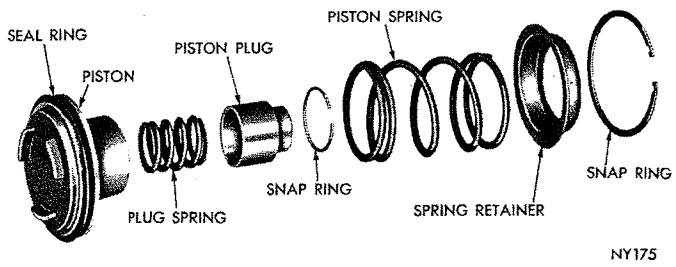


*Fig. 104—Low and Reverse Servo—Disassembled*

the band. If lining is worn so grooves are not visible at ends or any portion of the band, replace the band. Inspect band for distortion or cracked ends.

### Assembly

(1) Lubricate and insert piston plug and spring in the piston, and secure with snap ring.

## ASSEMBLY—SUB-ASSEMBLY INSTALLATION

The assembly procedures given here include installation of sub-assemblies in the transmission case and adjusting drive train end play. Do not use force to assemble mating parts. If parts do not assemble freely investigate the cause, and correct the trouble before proceeding with assembly procedures. Always use new gaskets during assembly operations.

**IMPORTANT: Use only Automatic Transmission Fluid AQ-ATF Suffix "A" to lubricate transmission parts during assembly.**

### Overrunning Clutch

(1) Insert clutch hub (race) inside overrunning clutch cam, then install the springs and rollers exactly as shown in Figure 105.

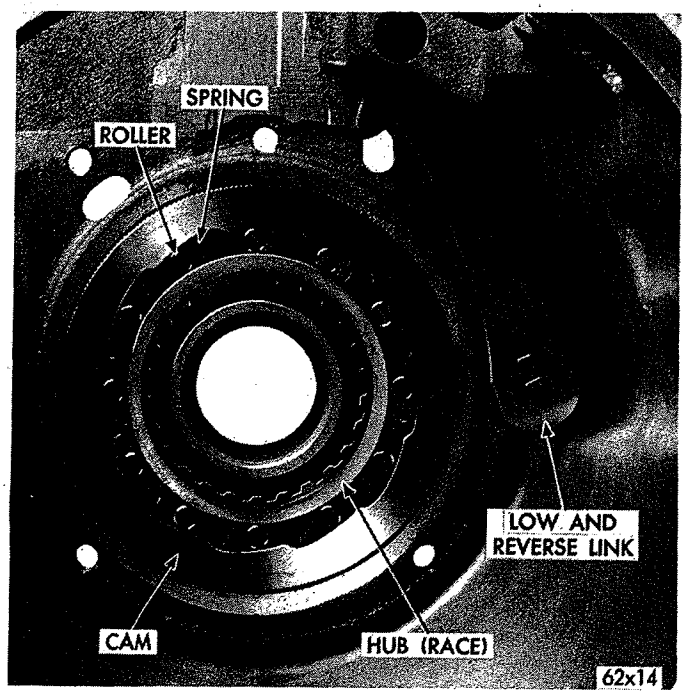


*Fig. 105—Overrunning Clutch, Low and Reverse Band Link*

### Low Reverse Servo and Band

(1) Carefully work servo piston assembly into the case with a twisting motion. Place spring, retainer and snap ring over the piston (Fig. 104).

(2) Compress low and reverse servo piston spring by using engine valve spring compressor Tool C-3422, then install snap ring.

(3) Position rear band in the case, install short strut, then connect long link and anchor to the band (Fig. 106). Screw in band adjuster just enough to hold strut in place. Install low-reverse drum.

**A-727-A and B:** Be sure long link and anchor assembly is installed, as shown in Figure 105 to provide running clearance for the low and reverse drum.

### Kickdown Servo

(1) Carefully push servo piston into the case bore. Install piston rod, two springs and guide (Fig. 103). **The A-904-G and A-904-LA transmissions use one small spring only. Also, one small spring only is used in the maximum performance vehicles with A-727-A and B transmissions.**

(2) Compress kickdown servo springs by using engine valve spring compressor Tool C-3422, then install snap ring.

### Planetary Gear Assemblies, Sun Gear, and Driving Shell

(1) While supporting assembly in the case, insert output shaft through rear support. Carefully work assembly rearward engaging rear planetary carrier lugs into low-reverse drum slots.

**CAUTION: Be very careful not to damage ground surfaces on output shaft during installation.**

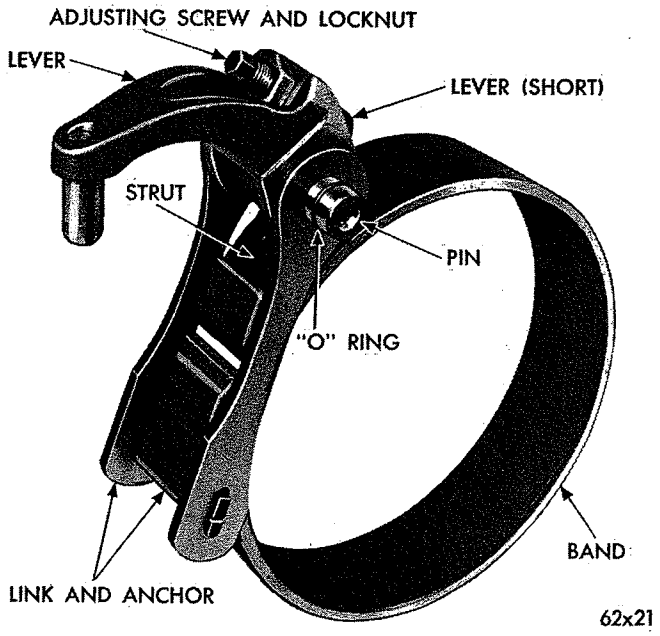


*Fig. 106—Low-Reverse Band and Linkage*

MyMopar.com

### Front and Rear Clutch Assemblies

The front and rear clutches, front band, oil pump and reaction shaft support are more easily installed with transmission in an upright position.

If transmission repair stand DD-1014 was not available to support transmission, an alternate method is outlined in Steps 1 and 2.

(1) Cut a 3½ inch diameter hole in a bench, in the end of a small oil drum or a large wooden box strong enough to support transmission. Cut or file notches at edge of the 3½ inch hole so output shaft support will fit and lay flat in the hole.

(2) Carefully insert output shaft into hole to support the transmission upright, with its weight resting on flange of the output shaft support.

(3) **A-904-G and A-904-LA:** Apply a coat of grease to selective thrust washer (Fig. 93) and install washer on front end of the output shaft. If drive train end play was not within specifications (.022 to .091 inch), when tested on Page 70, replace thrust washer with one of proper thickness.

The following selective washers are available for A-904-G and A-904-LA transmissions.

| Thickness | Color |
|---|---|
| .052-.054 inch | Natural |
| .068-.070 inch | Red |
| .083-.085 inch | Black |

**A-727-A and B:** Apply a coat of grease on the input to output shaft thrust washer (Fig. 94), and install washer on front end of the output shaft.

(4) Align front clutch plate inner splines, and place assembly in position on the rear clutch. Make sure front clutch plate splines are fully engaged on rear clutch splines.

(5) Align rear clutch plate inner splines, grasp input shaft and lower the two clutch assemblies into the transmission case.

(6) Carefully work clutch assemblies in a circular motion to engage rear clutch splines over splines of front annulus gear. Make sure front clutch drive lugs are fully engaged in slots in the driving shell.

### Front Band

Figure 107 shows a disassembled view of the kickdown band assembly.

(1) Slide band over front clutch assembly.

(2) Install band strut, screw in adjuster just enough to hold strut and anchor in place.

### Oil Pump and Reaction Shaft Support

If difficulty was encountered in removing pump assembly due to an exceptionally tight fit in the case, it may be necessary to expand the case with heat during pump installation. Using a suitable heat lamp, heat the case in area of pump for a few minutes prior to installing pump and reaction shaft support assembly.

**A-904-G and A-904-LA:** Install thrust washer on reaction shaft support hub (Fig. 69).

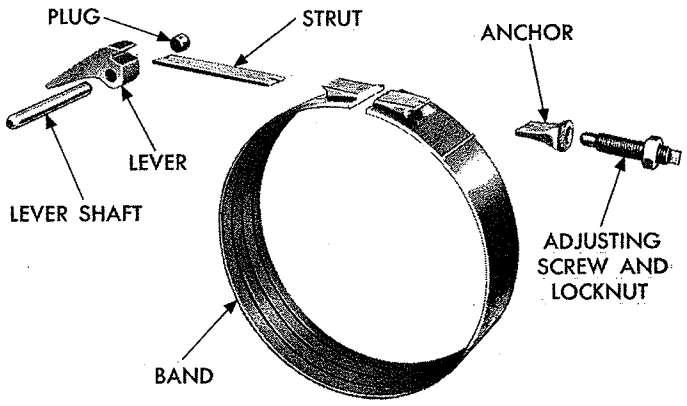


*Fig. 107—Kickdown Band and Linkage (Disassembled)*

**A-727-A and B:** If drive train end play was not within specifications (.036-.084 inch) when measured on Page 70, replace thrust washer on reaction shaft support hub with one of proper thickness (Fig. 74).

The following selective thrust washers are available for A-727-A and B transmissions.

| Thickness | Color |
|---|---|
| .061-.063 inch | Green |
| .084-.086 inch | Red |
| .102-.104 inch | Yellow |

(1) Screw to pilot studs, Tool C-3288 in pump opening in the case (Fig. 108). Install a new gasket over the pilot studs.

(2) Place a new rubber seal ring in the groove on outer flange of pump housing. Make sure seal ring is not twisted. Coat seal ring with grease for easy installation.

(3) Install pump assembly in the case; tap it lightly with a soft mallet, if necessary. Place deflector over

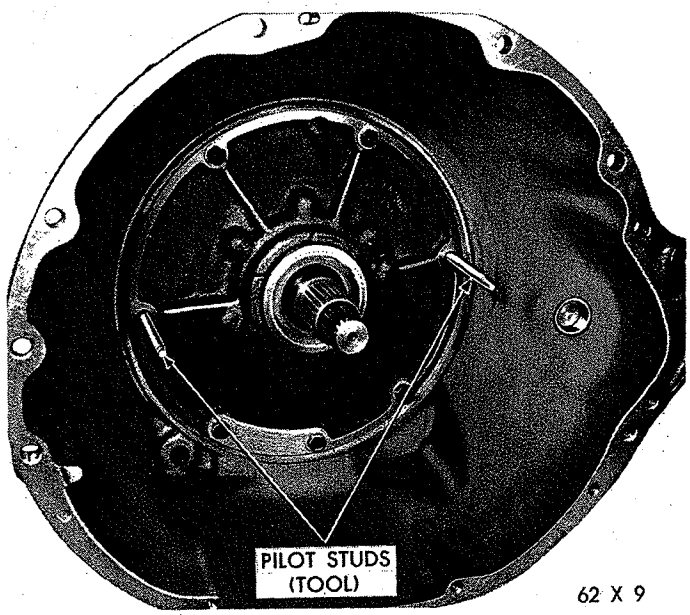


*Fig. 108—Installing Pump and Reaction Shaft Support Assembly*

MyMopar.com

vent opening and install four pump body bolts. (The A-904-G and LA do not use a deflector over vent opening.) Remove pilot studs, install remaining bolts and snug down evenly.

Rotate input and output shafts to see if any binding exists, then tighten bolts to a 150 inch-pounds. Check shafts again for free rotation.

### Governor and Support

(1) Position support and governor body assembly on the output shaft. Align assembly so governor valve shaft hole in governor body aligns with hole in output shaft, then slide assembly into place. Install snap ring behind the governor body (Fig. 44). Tighten body to support bolts to 100 inch-pounds. Bend ends of lock straps against bolt heads.

(2) Place governor valve on valve shaft, insert assembly into body and through governor weights. Install valve shaft retaining snap ring.

### Output Shaft Bearing and Extension Housing

(1) Install a snap ring in the innermost groove on output shaft. Install bearing on shaft with its outer race ring groove toward front (Fig. 43). Press or tap bearing tight against front snap ring, then install rear snap ring.

(2) Carefully unwind and slide yoke seal front stop ring into place on the shaft. Install seal with seal lips toward rear, then install rear stop ring on the shaft.

(3) Place a new extension housing gasket on the transmission case. Position output shaft bearing retaining snap ring in the extension housing. Spread snap ring as far as possible (Fig. 42), then carefully tap extension housing into place. **Make sure snap ring is fully seated in the bearing groove.**

(4) Install gasket, plate and two screws on bottom of extension housing mounting pad.

(5) Install and tighten extension housing bolts to 24 foot-pounds.

**IMPORTANT: Measure drive train end play as describe on Page 70. Correct if necessary.**

### Valve Body Assembly and Accumulator Piston

(1) Clean mating surfaces and inspect for burrs on both the transmission case and valve body steel plate.

(2) Install accumulator piston in transmission case and place piston spring on the accumulator piston.

(3) Insert parking lock rod through opening in rear of case with the knob positioned against the reaction plug and sprag. Move front end of rod toward center of transmission while exerting rearward pressure on rod to force it past the sprag (rotate output shaft if necessary).

(4) Place valve body manual lever in **LOW** position. Place valve body in its approximate position in the case, connect parking lock rod to manual lever and secure with E-clip. Align valve body in the case,

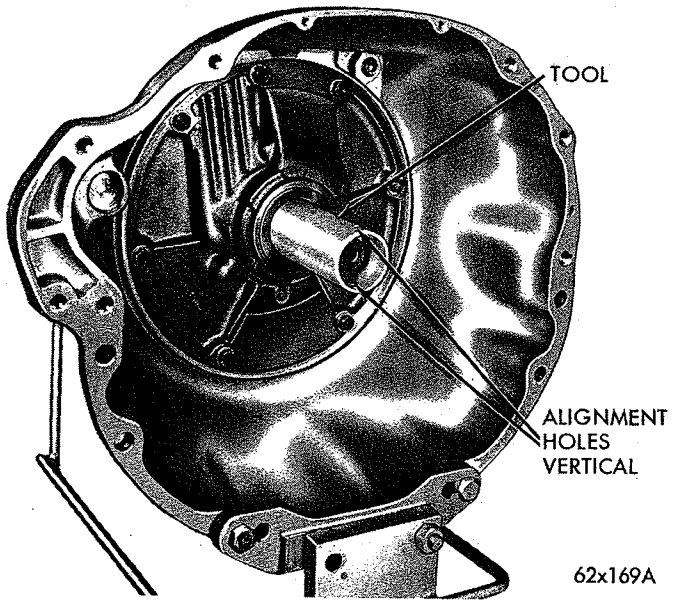


*Fig. 109—Aligning Pump Rotors*

install retaining bolts finger tight.

(5) With neutral starting switch installed, place manual valve in the neutral position. Shift valve body if necessary to center neutral finger over the neutral switch plunger. Snug bolts down evenly, then tighten to 100 inch-pounds.

(6) Install gearshift lever and tighten clamp bolt. Check lever shaft for binding in the case by moving lever through all detent positions. If binding exists, loosen valve body bolts and re-align.

(7) Make sure throttle shaft seal is in place, then install flat washer, lever and tighten the clamp bolt. Connect throttle and gearshift linkage and adjust as required.

(8) Adjust kickdown and low-reverse bands, as

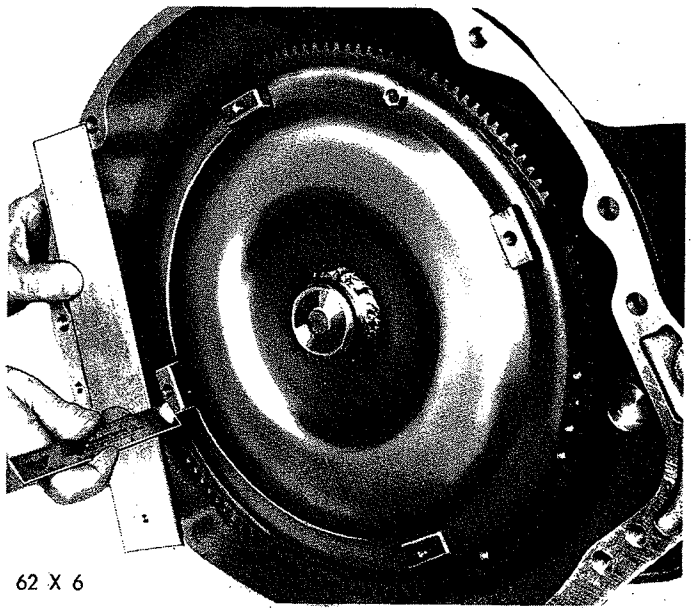


*Fig. 110—Measuring Converter for Full Engagement in Transmission*

MyMopar.com

described on Page 55.

(9) Install oil pan, using a new gasket. Add transmission fluid to bring it up to proper level. Refer to Page 47.

## TRANSMISSION AND CONVERTER INSTALLATION

**The transmission and converter must be installed as an assembly; otherwise, the converter drive plate, pump bushing, and oil seal will be damaged. The drive plate will not support a load; therefore, none of the weight of transmission should be allowed to rest on the plate during installation.**

(1) Rotate pump rotors with Tool C-3756 (A-904-G and A-904-LA) or Tool C-3881 (A-727-A and B) until the two small holes in handle are verticle (Fig. 109).

(2) Carefully slide converter assembly over input shaft and reaction shaft. Make sure converter impeller shaft slots are also vertical and fully engage pump inner rotor lugs.

Test for full engagement by placing a straight edge on face of the case (Fig. 110). The surface of converter front cover lug should be at least ½ inch to rear of straight edge when converter is pushed all way into the transmission.

(3) Attach a small "C" clamp to edge of bell housing to hold converter in place during transmission installation.

(4) Inspect converter drive plate for distortion or cracks and replace if necessary.

(5) Coat converter hub hole in crankshaft with wheel bearing grease. Place transmission and converter assembly on a service jack and position assembly under vehicle for installation. Raise or tilt as necessary until transmission is aligned with engine.

(6) Rotate converter so mark on converter (made during removal) will align with mark on drive plate. The offset holes in plate are located next to ⅛ inch hole in the inner circle of plate. A stamped V mark identifies the offset hole in converter front cover (Fig. 111). Carefully work transmission assembly forward over engine block dowels with converter hub entering the crankshaft opening.

(7) After transmission is in position, install bell housing bolts and tighten 25 to 30 foot-pounds.

(8) Install and tighten the two lower drive plate to converter bolts to 270 inch-pounds.

(9) Install starting motor and connect battery ground cable.

(10) Rotate engine with remote control switch and install the other two drive plate to converter bolts. Tighten bolts to 270 inch-pounds.

(11) Install crossmember and tighten attaching bolts securely. Lower transmission so extension housing is aligned and rests on rear mount. Install bolts and tighten to 35 foot-pounds.

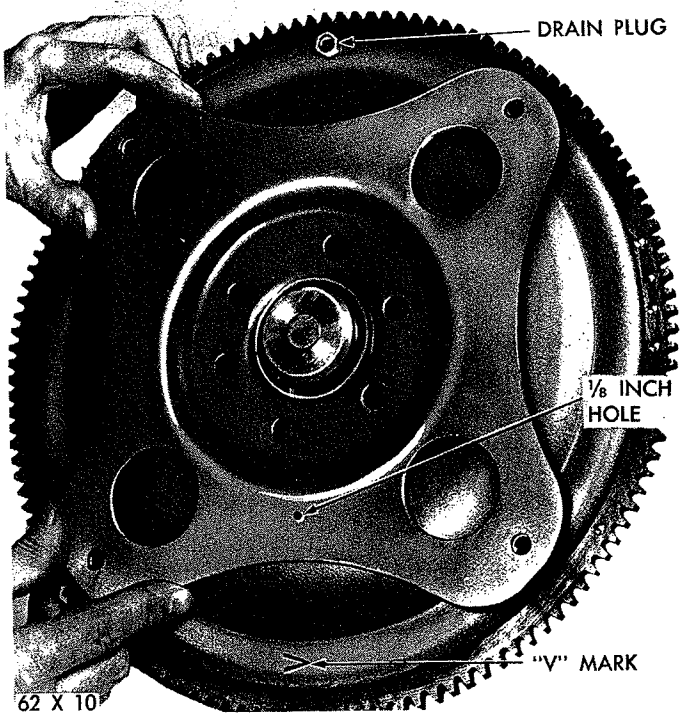


*Fig. 111—Converter and Drive Plate Markings*

(12) Install gearshift torque shaft and connect gearshift rod to the transmission lever.

**Console Shift:** Align gearshift torque shaft lower bracket with the extension housing. Install the two retaining bolts and tighten securely. Connect gearshift rod to the transmission lever.

(13) Clean and relubricate front universal joint sliding yoke splines as outlined in Group "O."

Carefully guide sliding yoke into extension housing and on the output shaft splines. Then connect propeller shaft to rear axle pinion shaft yoke.

(14) Connect oil cooler lines to the transmission and install oil filler tube. Connect the speedometer cable.

(15) Connect throttle rod to the transmission throttle lever.

(16) Connect wire to the neutral starting switch.

(17) Install cover plate in front of the converter assembly.

(18) Install the transmission case to cylinder block brace. **The converter cover plate must be between case and brace. The oil line bracket is attached in front of the brace. Tighten bolts holding brace to the case before attaching brace to the cylinder block.**

(19) Refill transmission with Automatic Transmission Fluid AQ-ATF Suffix "A." Refer to Page 47.

**To completely adjust throttle linkage, gearshift linkage and neutral starting switch, refer to Pages 53, 54 and 56.**

MyMopar.com

# SPECIFICATIONS

## 3-SPEED TRANSMISSIONS

| ENGINE DISPLACEMENT (CU. IN.) | 170 | 225 | Taxi/ Police 225 | 273, 318 | 361, 383, 426 |
|---|---|---|---|---|---|
| Trans. Models | A-903 | | A-745 | A-745 | A-745 |
| Gear Ratio | | | | | |
| First | 3.22 | 2.95 | 3.02 | 3.02 | 2.55 |
| Second | 1.84 | 1.83 | 1.76 | 1.76 | 1.49 |
| Third | 1.00 | 1.00 | 1.00 | 1.00 | 1.00 |
| Fourth | — | — | — | — | — |
| Reverse | 4.14 | 3.80 | 3.95 | 3.95 | 3.34 |
| Downshift Speed Limits | | | | | |
| 4th to 3rd | | | — | | |
| 3rd to 2nd | | | 40 to 10 mph | | |
| 2nd to 1st | | | Zero mph | | |
| Lubricant | | | | | |
| Capacity | | | Approximately 6½ Pints | | |
| Type | | | Auto. Trans. Fluid AQ—ATF Suffix "A" | | |
| Gear Type | | | Helical | | |
| Tolerances | | | | | |
| Second Speed Gear End Play | | | .004" to .014" | | |
| Countershaft Gear End Play | | | .0045" to .028" | | |
| Clutch Housing Face Run-Out | | | .006" Max. | | |
| Clutch Housing Bore Run-Out | | | .008" Max. | | |
| Synchronizer Float | | | .050" to .090" | | |

## 4-SPEED TRANSMISSIONS

| ENGINE DISPLACEMENT (CU. IN.) | 273, 361, 383, 426 |
|---|---|
| Trans. Models | A-833 4 Forward Speeds |
| Gear Ratio | |
| First | 2.66 |
| Second | 1.91 |
| Third | 1.39 |
| Fourth | 1.00 |
| Reverse | 2.58 |
| Gear Type | Helical (Except Reverse) |
| Tolerances | |
| Second Speed Gear End Play | |
| Countershaft Gear End Play | .015" to .029" |
| Clutch Housing Face Run-Out | .006" Max. |
| Clutch Housing Bore Run-Out | .008" Max. |
| Synchronizer Float | |

| | 273, 361, 383, 426 |
|---|---|
| Lubricant | |
| Capacity | Aprox. 8½ Pts. |
| Type | Warm Climate Multi-Purpose Gear Oil SAE 140 Cold Climate Multi-Purpose Gear Oil SAE 80 or 90, or Auto Trans. Fluid "AQ-ATF" Suffix "A" |
| Downshift Speed Limits | |
| 4th to 3rd | 50 to 25 mph |
| 3rd to 2nd | 25 to 15 mph |
| 2nd to 1st | 15 to Zero mph |

MyMopar.com

## TORQUEFLITE TRANSMISSIONS

| TRANSMISSION MODELS | A-904-G & A-904-LA | A-727-A & B |
|---|---|---|
| TYPE | Automatic Three Speed with Torque Converter | |
| TORQUE CONVERTER DIAMETER | 10¾ inches | 11¾ inches |
| OIL CAPACITY—TRANSMISSION AND TORQUE CONVERTER | 16 pints | 18½ pints |
| | Automatic Transmission Fluid Type AQ-ATF, Suffix "A" | |
| COOLING METHOD | Water-Heat Exchanger | |
| LUBRICATION | Pump (Rotor Type) | |
| CLUTCHES | | |
| Number of Front Clutch Plates | 3(170-225 Cu. In. Eng.) | 4 |
| | 4(273 Cu. In. Eng.) | — |
| Number of Front Clutch Discs | 3(170-225 Cu. In. Eng.) | 4 |
| | 4(273 Cu. In. Eng.) | — |
| Number of Rear Clutch Plates | 2(170-225 Cu. In. Eng.) | 3 |
| | 3(273 Cu. In. Eng.) | — |
| Number of Rear Clutch Discs | 3(170-225 Cu. In. Eng.) | 4 |
| | 4(273 Cu. In. Eng.) | — |
| GEAR RATIOS | | |
| 1—Low | 2.45 to 1 | |
| 2—Second | 1.45 to 1 | |
| D—Drive | 1 to 1 | |
| R—Reverse | 2.20 to 1 | |
| N—Neutral | — | |
| PUMP | | |
| Type | Gear (Rotary) | |
| End Clearance (Rotor) | .001 to .0025 inch | |
| DRIVE TRAIN END PLAY | .022 to .091 inch | .036 to .084 inch |
| CLUTCH PLATE CLEARANCE | | |
| Front Clutch | .042 to .087 inch (3 Disc Clutch) | .024 to .123 inch |
| | .056 to .104 inch (4 Disc Clutch) | — |
| Rear Clutch | .026 to .055 inch (3 Disc Clutch) | .037 to .060 inch |
| | .032 to .055 inch (4 Disc Clutch) | — |
| SNAP RINGS | | |
| Front and Rear Clutches | | |
| Rear Snap Ring (Selective) | .060 to .062 inch | .060 to .062 inch |
| | .068 to .070 inch | .074 to .076 inch |
| | .076 to .078 inch | .088 to .090 inch |
| Output Shaft (Forward End) | .040 to .044 inch | .048 to .052 inch |
| | .048 to .052 inch | .055 to .059 inch |
| | .059 to .065 inch | .062 to .066 inch |
| THRUST WASHERS | | |
| Output Shaft to Input Shaft (Selective) | .052 to .054 inch | — |
| | (Natural) | — |
| | .068 to .070 inch | — |
| | (Red) | — |
| | .083 to .085 inch | — |
| | (Black) | — |
| Reaction Shaft Support to Front Clutch Retainer (Selective) | — | .061 to .063 inch |
| | — | (Green) |
| | — | .084 to .086 inch |
| | — | (Red) |
| | — | .102 to .104 inch |
| | — | (Yellow) |
| Sun Gear Driving Shell | .060 to .062 inch | — |
| Driving Shell (Steel) | .034 to .036 inch | — |
| Overrunning Clutch Race | .060 to .062 inch | — |
| Kickdown Annulus Support | .121 to .125 inch | — |

MyMopar.com

| TRANSMISSION MODELS | A-904-G & A-904-LA | A-727-A & B |
|---|---|---|
| Front Clutch to Rear Clutch | .043 to .045 inch | — |
| Front Clutch to Reaction Shaft Support | .043 to .045 inch | — |
| Output Shaft to Input Shaft | — | .062 to .064 inch |
| Sun Gear Driving Shell Thrust Plate (Steel) | — | .034 to .036 inch |
| Rear Planetary Gear to Driving Shell | — | .062 to .064 inch |
| Front Planetary Gear to Annulus Gear Support | — | .062 to .064 inch |
| Front Annulus Gear Support to Driving Shell | — | .062 to .064 inch |
| Front Clutch Piston Retainer to Rear Clutch Piston Retainer | — | .061 to .063 inch (Green) |

# TIGHTENING REFERENCE

| Manual A-903, A-745 3-Speed | FOOT POUNDS |
|---|---|
| Extension Housing Bolts | 50 |
| Front Bearing Retainer Bolts | 35 |
| Gearshift Operating Lever Nuts | 20 |

| Manual A-833 4-Speed | FOOT POUNDS |
|---|---|
| Crossmember Attaching Bolts | 50 |
| Drive Pinion Bearing, Retainer Bolts | 35 |
| Extension Housing to Case Bolts | 35-45 |
| Gearshift Housing Bolts | 15 |

| TORQUEFLITE A-904-G, A-904-LA AND A-727-A and B | POUNDS FOOT | POUNDS INCH |
|---|---|---|
| Cooler Line Fitting | | 75 |
| Converter Drain Plug | 14 | |
| Converter Drive Plate to Crankshaft Bolt | 55 | |
| Converter Drive Plate to Torque Converter Bolt | | 270 |
| Extension Housing to Transmission Case Bolt | 24 | |
| Extension Housing to Insulator Mounting Bolt | 35 | |
| Extension Housing—Crossmember to Frame Bolt | 75 | |
| Governor Body to Support Bolt | | 100 |
| Kickdown Band Adjusting Screw Lock Nut A-727-A and B | 29 | |
| Kickdown Band Adjusting Screw Lock Nut A-904-G, A-904-LA | 25 | |
| Kickdown Lever Shaft Plug | | 150 |

| | FOOT POUNDS |
|---|---|
| Transmission to Clutch Housing Bolts | 50 |
| Transmission Cover Retaining Bolts | 15 |
| Transmission Drain Plug | 30 |

| | FOOT POUNDS |
|---|---|
| Gearshift Operating Lever Nuts | 20 |
| Shift Lever Bolts | 30 |
| Shift Mechanism Pivot Bolt | 55 |
| Transmission Drain Plug | 30 |
| Transmission to Clutch Housing Bolts | 50 |

| | POUNDS FOOT | POUNDS INCH |
|---|---|---|
| Neutral Starter Switch | 25-35 | |
| Oil Filler Tube Bracket Bolt | | 150 |
| Oil Pan Bolt | | 150 |
| Oil Pump Housing to Transmission Case Bolt | | 150 |
| Output Shaft Support Bolt | | 140 |
| Overrunning Clutch Cam Set Screw | | 40 |
| Pressure Test Take-Off Plug | | 75 |
| Reaction Shaft Support to Oil Pump Bolt | | 150 |
| Reverse Band Adjusting Screw Lock Nut A-727-A and B | 35 | |
| Reverse Band Adjusting Screw Lock Nut A-904-G, A-904-LA | 20 | |
| Speedometer Drive Clamp Screw | | 100 |
| Transmission to Engine Bolt | 25-30 | |
| Valve Body Screw | | 28 |
| Valve Body to Transmission Case Bolt | | 100 |

MyMopar.com

MyMopar.com

# WHEELS–BEARINGS–TIRES

## CONTENTS


| | Page |
|---|---|
| SERVICE PROCEDURES | 3 |
| SPECIFICATIONS | 6 |
| TIGHTENING REFERENCE | 5 |
| TIRES | |
| LEAKS | 3 |
| PRESSURE CHECKS | 3 |
| ROTATION | 3 |
| WEAR PATTERNS | 1 |
| WHEEL COVERS | 5 |
| WHEELS | |
| BALANCING | 4 |
| BEARING ADJUSTMENT | 4 |
| INSTALLATION (with Disc Brakes) | 4 |
| (without Disc Brakes) | 4 |
| LUBRICATION OF BEARINGS | 4 |
| REMOVAL (with Disc Brakes) | 4 |
| (without Disc Brakes) | 4 |
| WHEEL RUNOUT | 5 |


## GENERAL INFORMATION

The safety rim wheel (Fig. 1) has raised sections between the rim flange and the rim well. Initial inflation of the tire forces the beads over these raised sections and in the event of a blowout, tend to hold the tire in position on the wheel, until the vehicle is brought to a safe stop.

Wheel covers should only be removed and installed in the recommended manner to eliminate possible damage.

Front wheel bearing lubricant should be changed at the recommended intervals or at the time of a normal brake reline. Lubricant should not be added to that already in the bearings.

The original equipment normal service 4 ply rating tubeless type tires are designed and tested to meet the normal operation requirement of the vehicle. For continuous operation at "MAXIMUM LOAD CAPACITY" (see Vehicle Load and Tire Pressure Chart or other heavy duty operation, optional oversize and/or heavy service 8 ply rating tires are available. Refer to Page 2.

## TIRE WEAR PATTERNS

The various tire wear patterns illustrated in (Fig. 3) show the type of wear under normal vehicle operation, the normal cause of a particular wear pattern and the normal corrective measures.

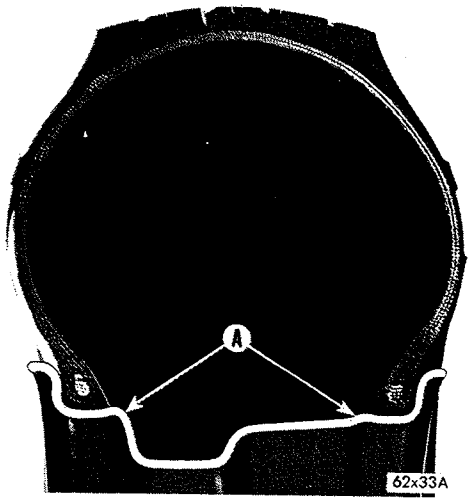


*Fig. 1—Safety Type Rim*

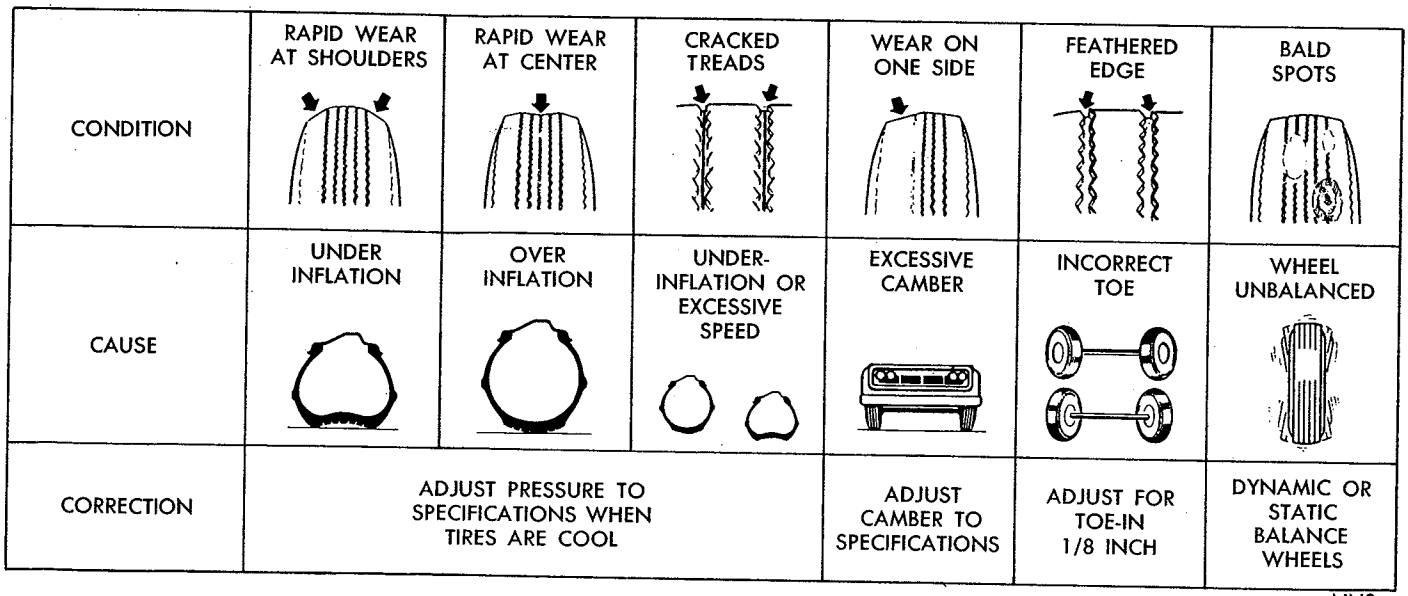


*Fig. 2—Tire Wear Patterns*

MyMopar.com

## VEHICLE LOAD AND TIRE PRESSURES

| VEHICLE LOAD (POUNDS) | | | | |
|---|---|---|---|---|
| MODEL | AVERAGE RATED LOAD | FULL RATED LOAD SEDAN-HARDTOP CONVERTIBLE | FULL RATED LOAD 2 SEAT STATION WAGON | FULL RATED LOAD 3 SEAT STATION WAGON |
| |  UP TO AND INCLUDING 5-PASSENGERS |  6-PASSENGERS (PLUS LUGGAGE) |  6-PASSENGERS (PLUS LUGGAGE) |  8-PASSENGERS (OR EQUIVALENT) |
| VALIANT | 750 | 1065 | 1065 | — |
| BARRACUDA* | 750 | 1030 | — | — |
| BELVEDERE—SATELLITE | 750 | 1100 | 1150 | 1200 |
| FURY | 750 | 1100 | 1200 | 1200 |

**RECOMMENDED TIRE PRESSURES (PSI)**

For sustained driving above 60 M.P.H., cold inflation pressures should be increased 4 PSI above those indicated below, but not to exceed the maximum pressures of Item 1. Front to rear differential pressure should be maintained.

| MODEL APPLICATION | AVERAGE RATED LOAD | | FULL RATED LOAD SEDAN-HARDTOP CONVERTIBLE | | FULL RATED LOAD 2 SEAT STATION WAGON | | FULL RATED LOAD 3 SEAT STATION WAGON | |
|---|---|---|---|---|---|---|---|---|
| | FRONT COLD | REAR COLD | FRONT COLD | REAR COLD | FRONT COLD | REAR COLD | FRONT COLD | REAR COLD |
| VALIANT—EXCEPT WAGON | 24 | 24 | 28 | 30 | — | — | — | — |
| VALIANT—WAGON | 24 | 28 | — | — | 26 | 32 | — | — |
| BARRACUDA | 24 | 26 | 30 | 32 | — | — | — | — |
| BARRACUDA—FORMULA (S)** | 24 | 24 | 30 | 30 | — | — | — | — |
| BELVEDERE, SATELLITE—EXCEPT WAGON | 24 | 24 | 30 | 32 | — | — | — | — |
| BELVEDERE—WAGON | 24 | 28 | — | — | 26 | 32 | 26 | 32 |
| FURY—EXCEPT WAGON | 24 | 24 | 30 | 32 | — | — | — | — |
| FURY—WAGON | 24 | 28 | — | — | 26 | 32 | 26 | 32 |

*Barracuda is considered a 5 passenger vehicle and Full Rated Load is 1030#.
**Formula (S) Barracuda tire pressure can be increased to 36 PSI maximum for optimum stability and high speed life.

1. **Cold inflation pressures** must not exceed 32 PSI for 4 ply rating and 40 PSI for 8 ply rating tires. Pressure build-up during driving is normal. Do not reduce pressure of warm tires.
2. **Over-sized tires** use the same pressure as standard tires.
3. **Trailer towing** packages provide oversize or heavy service tires. When these tires are 8 ply rating tires, operating pressures (cold) should be increased 4 PSI front and rear.
4. **Snow tires** should be operated with rear tire pressures 4 PSI above standard but must not exceed the maximum pressures of Item 1.

NN606A

***Vehicle Load and Tire Pressure Chart***

MyMopar.com

### Underinflation

When a tire is underinflated, the side walls and shoulder edges of the thread carry the load while the center of the tread folds in or compresses and causes the shoulders to wear faster than the center of the thread.

### Overinflation

When a tire is overinflated the outer shoulder is forced up and away from the road surface, causing the center of the tread to wear faster than the shoulders.

### Cracked Treads

This is a combination of under inflation and/or high speed which causes the cracking of the rubber between the tire tread pattern.

### Excessive Camber

Excessive wheel camber, causes the tire to run at an angle to the road surface so one side of the tire tread wears faster.

### Incorrect Toe

Incorrect toe in or toe out will usually produce a tapered or feathered edge on the ribs of the tire tread.

### Wheel Unbalance

Wheel unbalance normally causes cupping, scalloping and bald spotting of tires. This type of wear usually appears on a vehicle that is mostly driven at highway speeds without the recommended tire rotation and with unbalanced conditions.

## SERVICE PROCEDURES

## TIRES

### PRESSURE CHECKS

For best performance, keep all tires inflated to the recommended pressure. An increase in tire pressure while driving is normal. Reducing pressure to compensate for this increase will adversely affect vehicle stability and increased tire wear will also develop. Tire pressures should **only** be checked when they are **cold.**

### TIRE ROTATION

With increased road speeds and faster cornering abnormal tire wear may exist on certain wheels. By rotating tires at recommended intervals and in the recommended sequence (Fig. 4) tire life will be prolonged. Rotate tires at every second oil change.

### REPAIRING LEAKS

Leaks between the tire and wheel require the removal of the tire. Leaks in the tire can often be repaired without removing the tire. Always follow the equipment manufacturers recommendations.

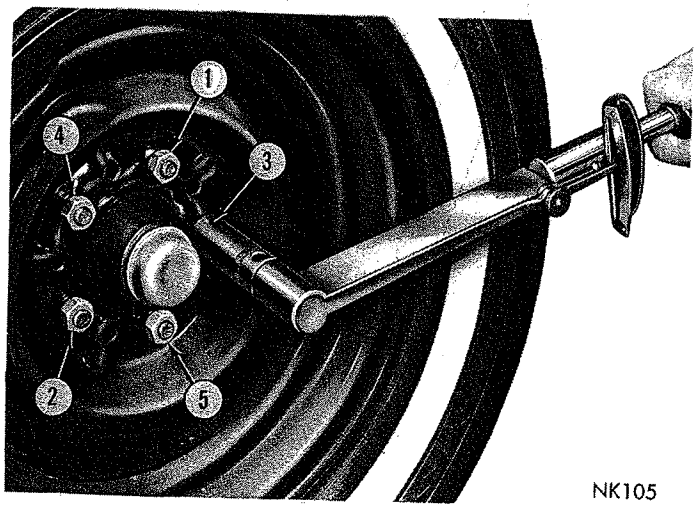


*Fig. 3—Wheel Stud Nut Tightening Sequence*

Tools used for dismounting and mounting tires must be smooth, free from sharp edges or projections which could damage the tire or tire rim.

The tire must be completely deflated before the tire beads are removed from the seats. Before mounting the tire on the wheel, make sure all rust scale is removed from the inside wheelrim and all roughness has been removed from the butt weld in the tire contact area. A mild soap solution applied to both tire bead surfaces will aid in installation. Either a commercial type bead expander or a rope tourniquet can be used to seat the tire beads.

When installing wheel on vehicle, progressively tighten wheel nuts in sequence shown in (Fig 3) and to proper specifications.

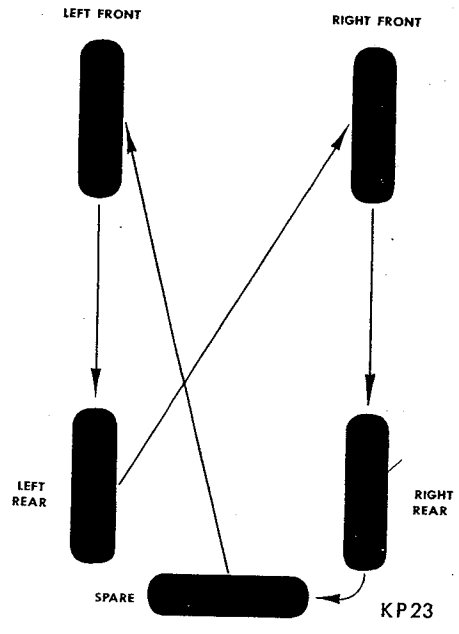


*Fig. 4—Tire Rotation*

MyMopar.com

# WHEELS

## FRONT WHEEL BEARING LUBRICATION

### *Removal (without Dics Brakes)*

(1) Raise vehicle so front wheels are free of the floor.

(2) Remove wheel cover, grease cap, cotter pin, nut lock and bearing adjusting nut.

(3) Remove thrust washer and outer bearing cone.

(4) Slide wheel, hub and drum assembly off the spindle.

(5) Drive out inner oil seal and remove bearing cone.

### *Removal (with Disc Brakes)*

Perform steps 1 through 5 in same manner for those vehicles equipped with Disc Brakes.

### *Cleaning and Inspection*

(1) Clean the hub and drum assembly and the bearings in kerosene, mineral spirits or other similar cleaning fluids. **Do not dry the bearings by air spinning.**

(2) Examine bearing cups for pitting, brinnel marks or other imperfections. If cups are damaged, remove them from the hub with a soft steel drift positioned in the slots in the hub.

(3) Bearing cup areas in the hub should be smooth without scored or raised metal which could keep the cups from seating against shoulders in hub.

(4) The bearing cones and rollers should have smooth, unbroken surfaces without brinnel marks. The ends of the rollers and both cone flanges should also be smooth and free from chipping or other damage.

### *Installation (without Disc Brakes)*

(1) If the bearing cups were removed, start the new cups into hub evenly, driving them flush with hub using a soft steel block and hammer. Seat cups against shoulders of hub, using a soft steel drift and hammer.

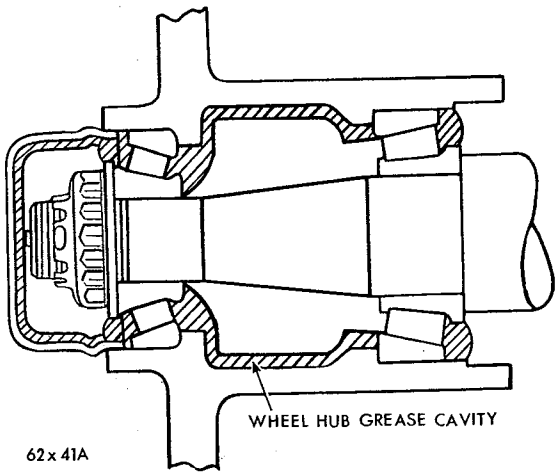


*Fig. 5—Wheel Hub Grease Cavity*

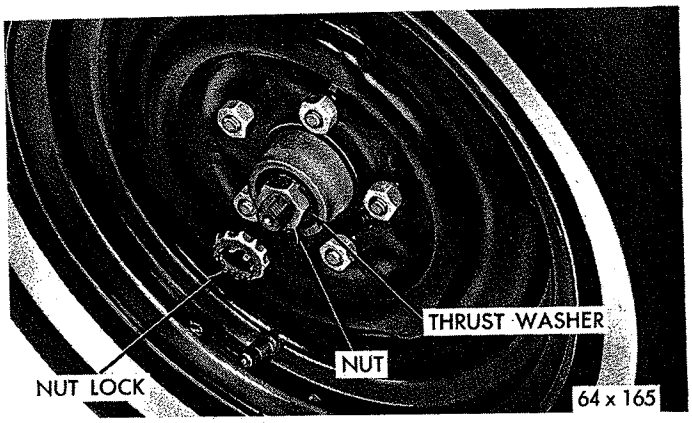


*Fig. 6—Front Wheel Bearing Adjustment*

(2) Fill hub grease cavity (Fig. 5) with recommended wheel bearing lubricant. Lubricant should be even with inner diameter of bearing cups.

(3) Force lubricant between bearing cone rollers or repack using a suitable bearing packer.

(4) Install inner cone and a new seal, with lip of seal facing inward. Using Tool C-3893, position seal flush with end of hub. The seal flange may be damaged if tool is not used.

(5) Clean the spindle and apply a light coating of wheel bearing lubricant over the polished surfaces.

(6) Install wheel tire and drum assembly on spindle.

(7) Install outer bearing cone, thrust washer and adjusting nut.

### *Installation (with Disc Brakes)*

Perform steps 1 through 7 in the same manner for those vehicles equipped with Disc Brakes.

### *Adjustment*

(1) Tighten wheel bearing adjusting nut to 90 inch-pounds while rotating wheel.

(2) Position nut lock (Fig. 6) on nut with one pair of slots in line with cotter pin hole.

(3) Back off adjusting and nut lock assembly one slot and install cotter pin. **The resulting adjustment should be zero (no preload) to .003 inch end play.**

(4) Clean the grease cap, coat inside with wheel bearing lubricant (do not fill) and install.

(5) Install wheel covers and lower vehicle to floor.

## WHEEL BALANCE

The need for balancing the wheels is indicated by heavy vibration of the steering wheel of the car when driving at speeds above 40 miles an hour over a smooth straight highway.

Static (still) balance is equal distribution of the weight of the wheel and tire around the spindle, ir

MyMopar.com

such a manner that the wheel assembly has no tendency to rotate by itself, regardless of its position. A wheel that has a heavy spot is statically out of balance, resulting in a "hopping" or bouncing action.

A wheel and tire, to be in dynamic balance, must first be in static balance and also be in balance from side to side when the wheel is at a 90 degree angle to the axis of rotation. A wheel not in dynamic balance tends to wobble or shimmy.

Correction for static unbalance is made by first finding the location of the heavy spot, then adding sufficient weight to counterbalance it at a location opposite the heavy section. (Follow the equipment manufacturers recommendations.)

## WHEELS AND TIRE RUNOUT

Wheels and tires may be measured for both radial and lateral runout. Radial runout (eccentricity) is the difference between the high and low points on the tread of the tire; while lateral runout is the "wobble" of the wheel and/or tire.

Prior to measuring wheel and tire for runout, the face of the hub at the mounting bolts should be measured for runout. The car should be driven a short distance before the measurement is made so that "flat spotting" of the tire (from being parked) does not affect the runout measurement.

(1) Attach dial indicator C-3339 to a firm base so it will be held steady while taking runout readings.

(2) Place plunger of dial indicator against one of the center ribs of tire tread and rotate wheel slowly to measure radial runout. This measurement should not exceed .060 inch.

(3) To measure lateral runout (wobble), position dial indicator against side of tire. This measurement should not exceed .080 inch.

Rotating tire on wheel may reduce runout or it may be necessary to take dial indicator measurements of the wheel itself in order to determine which unit has

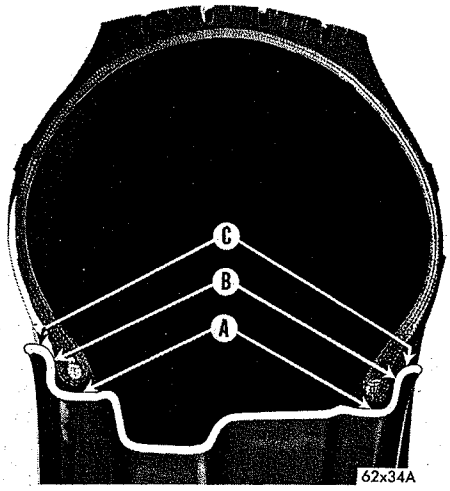


*Fig. 7—Runout Checking Area*

the excessive runout. Since the exterior surfaces of the wheel rim may have paint runs or bubbles scratches or other imperfections it is better to dial indicate the protected areas "A" and "B" (Fig. 7). **Under no circumstances should point indicated by "C" be used for measuring runout as this metal has been sheared in the manufacturing process and is not an even surface.** The radial runout, "A" should not exceed .035 inch. The lateral runout (wobble), "B" should not exceed .045 inch.

## WHEEL COVERS

To avoid damaging the wheel covers during removal and installation, care should be used to be sure the forces are applied to the correct areas **Do not remove wheel cover at valve stem hole.** The covers are structurally stronger at the outher circumference to withstand the force required for removal and installation. Use a rubber end mallet when installing the covers.

# TIGHTENING REFERENCE

| | POUNDS FOOT |
|---|---|
| **WHEEL BEARING NUT (With Wheel Spinning)** | |
| Valiant | 70 |
| Plymouth | 90 |
| **Wheel Stud Nut** | |
| Valiant | 55 |
| Plymouth | 65 |

MyMopar.com

# SPECIFICATIONS

| | Valiant | | Belvedere-Satellite | | Fury | |
|---|---|---|---|---|---|---|
| | 6-Cyl. | 8-Cyl. | 6-Cyl. | 8-Cyl. | 6-Cyl. | 8-Cyl. |
| **WHEELS** | | | | | | |
| Type | Steel Disc | | | | | |
| Rim | Drop Center—Safety Wheel | | | | | |
| Size—Standard | 13x4-1/2J | | 14x5K | | 14x5K | 14x5K-14x5-1/2JK |
| —Station Wagon | 13x4-1/2J | | 14x5-1/2K | | 14x6JK | |
| —Barracuda Formula (S) | 14x5-1/2J | | — | | — | |
| —Disc Brakes | 14x5-1/2J | | — | | 15x6K | |
| No. of Wheel Nuts | 5 | | 5 | | 5 | |
| Stud Size | 7/16"-20 | | 1/2"-20 | | 1/2"-20 | |
| Stud Hole Circle | 4" | | 4-1/2" | | 4-1/2" | |
| Wheel Nut Torque | 55 ft-lbs. | | 65 ft-lbs. | | 65 ft-lbs. | |
| Bearing Nut Torque (Wheel Spinning) | 70 in-lbs. | | 90 in-lbs. | | 90 in-lbs. | |
| **TIRES** | | | | | | |
| Type | Tubeless | | | | | |
| Size—Sedans | 6.50-13 | 7.00-13 | 6.95-14 | 7.35-14 | 7.35-14 | 7.75-14 |
| —With Air Conditioning | 7.00-13 | 7.00-13 | 7.35-14 | 7.35-14 | 7.75-14 | 7.75-14 |
| —"B" Engine With Air Conditioning | — | — | — | 7.75-14 | — | 8.25-14 |
| —Convertibles | 6.50-13 | 7.00-13 | 7.35-14 | 7.35-14 | — | 7.75-14 |
| —With Air Conditioning | 7.00-13 | 7.00-13 | — | 7.75-14 | — | 8.25-14 |
| —"B" Engine and Air Conditioning | — | — | — | 7.75-14 | — | 8.25-14 |
| —Station Wagon 2-Seat | 6.50-13 | 7.00-13 | 7.75-14 | 7.75-14 | 8.55-14 | 8.55-14 |
| 3-Seat | — | — | 8.25-14 | 8.25-14 | 8.55-14 | 8.55-14 |
| —With Air Conditioning | 7.00-13 | 7.00-13 | — | — | — | — |
| —Barracuda | 6.50-13 | 7.00-13 | — | — | — | — |
| —With Air Conditioning | 7.00-13 | 7.00-13 | — | — | — | — |
| —Barracuda Formula (S) | — | 6.95-14 | — | — | — | — |
| | | Nylon | | | | |
| **DISC BRAKES** | | | | | | |
| —Sedans and Convertibles | 6.95-14 | 6.95-14 | | | | |
| —Station Wagon | 6.95-14 | 6.95-14 | | | | |
| —Sedans and Convertibles with 318 Cu. In. Engine | | | | | | 7.75-15 |
| —With Air Conditioning | | | | | | 8.15-15 |
| —Sedans with 440 Cu In. Engine | | | | | | 7.75-15 |
| —With Air Conditioning | | | | | | 8.15-15 |
| Convertibles with 440 Cu. In. Eng. | | | | | | 8.15-15 |
| —Station Wagon (All) | | | | | | 8.15-15 |
| | | | | | | Heavy Service |

For Vehicle Load and recommended Tire Pressures, see Chart on Page 2 of this section.

MyMopar.com

# Plymouth

## SERVICE MANUAL 1966

### FOREWORD

This Plymouth Service Manual has been prepared with the latest service information available for use on 1966 models. Diagnosis, disassembly, repair, assembly and installation procedures coupled with complete specifications and tightening references can be found in each group. This publication is one of the most important "tools" available to the service technician. It will prove an invaluable aid in properly performing any phase of service necessary to maintain or restore the fine performance and reliability characteristics designed, engineered, and manufactured into these outstanding automobiles.

### PLYMOUTH MODELS

| | 1966 | |
|---|---|---|
| Valiant V-100, V-200, Signet and Barracuda | 6 Cyl. | BV-1 |
| Valiant V-100, V-200, Signet and Barracuda | 8 Cyl. | BV-2 |
| Belvedere I, II | 6 Cyl. | BR-1 |
| Belvedere I, II and Satellite | 8 Cyl. | BR-2 |
| Fury I, II, III | 6 Cyl. | BP-1 |
| Fury I, II, III and Sport Fury | 8 Cyl. | BP-2 |

| | 1965 | |
|---|---|---|
| Valiant V-100, V-200, Signet and Barracuda | 6 Cyl. | AV-1 |
| Valiant V-100, V-200, Signet and Barracuda | 8 Cyl. | AV-2 |
| Belvedere I, II | 6 Cyl. | AR-1 |
| Belvedere I, II and Satellite | 8 Cyl. | AR-2 |
| Fury I, II, III | 6 Cyl. | AP-1 |
| Fury I, II, III and Sport Fury | 8 Cyl. | AP-2 |

The service tools referred to in this Manual are available through Kelsey-Hayes Company, Miller Special Tools, 17640 Grand River, Detroit, Michigan 48227, U.S.A. unless otherwise specified.

Extra copies of this Manual are available at $5.00 each under Part Number 81-570-6450. Order from Chrysler-Plymouth Division, Service Department, P.O. Box 1658, Detroit, Michigan 48231.

CHRYSLER - PLYMOUTH DIVISION

CHRYSLER MOTORS CORPORATION

Chrysler Corporation reserves the right to make changes in design or to make additions to or improvements in its product without imposing any obligations upon itself to install them on its products previously manufactured.

Litho in U. S. A.

35M SD & T 8-65

### GROUP INDEX


| | |
|---|---|
| | Introduction and General Specifications |
| 0 | Lubrication and Maintenance |
| 1 | Accessories—(Radios, Heaters, Mirrors) |
| 2 | Front Suspension |
| 3 | Rear Axle |
| 5 | Brakes—Service Parking |
| 6 | Clutch |
| 7 | Cooling System—Accessory Belt Drives |
| 8 | Electrical and Instruments |
| 9 | Engine—Engine Oiling |
| 11 | Exhaust System |
| 14 | Fuel System |
| 16 | Propeller Shaft and Universal Joints |
| 17 | Springs and Shock Absorbers |
| 19 | Steering Gear—Manual Power |
| 21 | Transmission—Standard Automatic |
| 22 | Wheels, Bearings and Tires |
| 23 | Body, Sheet Metal and Frame |
| 24 | Air-Conditioning |




MyMopar.com

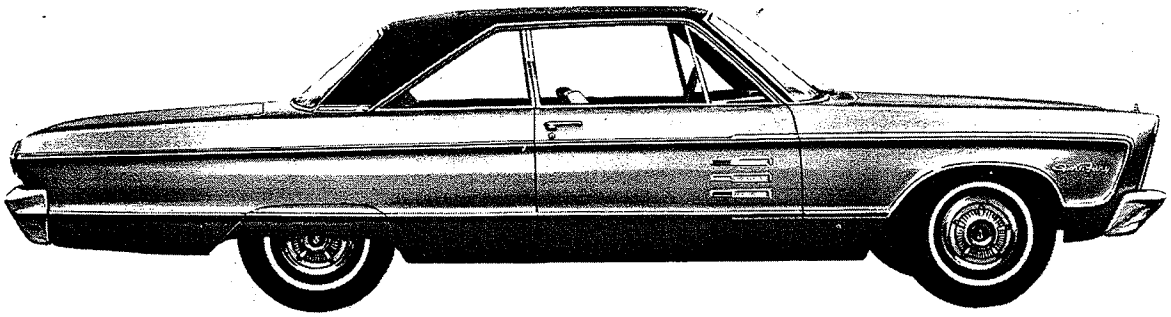

SPORT FURY 2-DOOR HARDTOP

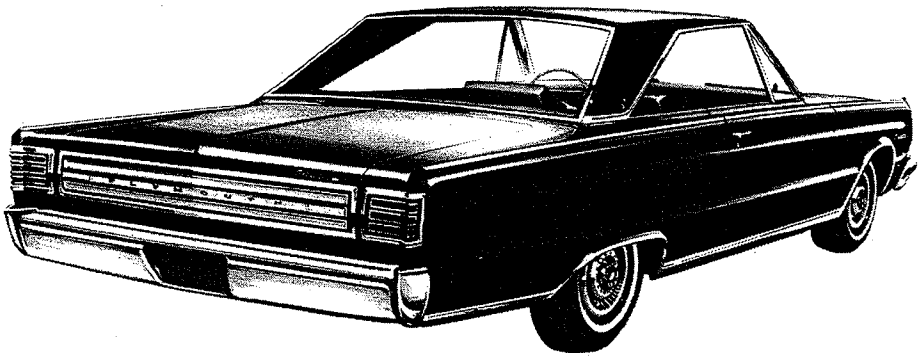

SATELLITE 2-DOOR HARDTOP

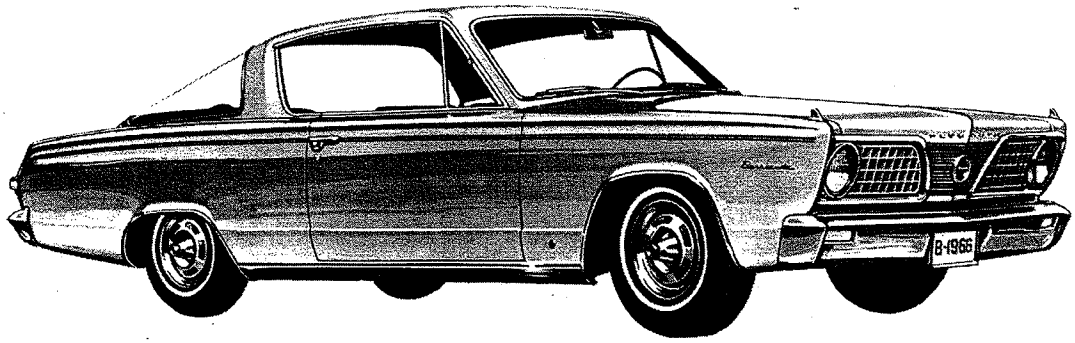


BARRACUDA

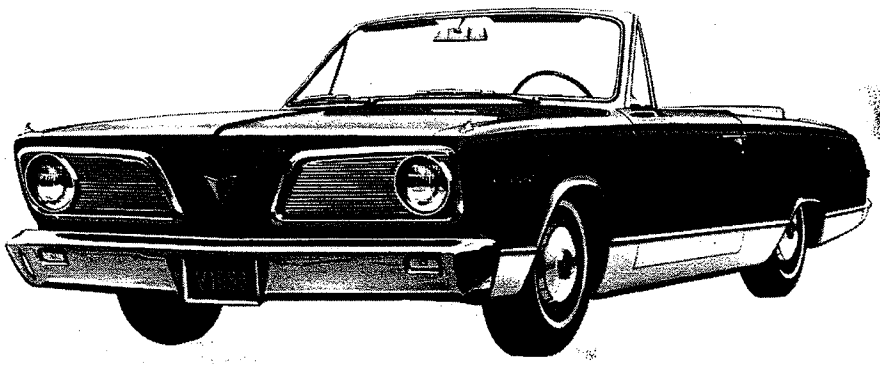

SIGNET CONVERTIBLE

NN807

***Fig. 1—1966 Plymouth Models***

MyMopar.com

# BODY AND FRAME

## CONTENTS


| | Page |
|---|---|
| BODY AND FRAME ALIGNMENT | 146 |
| CONVERTIBLE | 125 |
| INTERIOR TRIM AND SEATS | 74 |
| MAINTENANCE AND CARE | 1 |
| REFINISHING PROCEDURES | 152 |
| SEALING | 126 |
| SHEET METAL—DOORS—EXTERIOR MOULDINGS | 5 |
| STATIONARY GLASS | 109 |
| VINYL ROOF COVERING | 142 |


## GENERAL INFORMATION

### *"Unibody" Construction*

The featured "Unibody" type construction is one in which the body shell and the underbody (frame) are welded together into one unit.

To achieve greater rigidity and overall strength of the body-shell, two additional heavy-duty crossmembers, one under the rear seat area and the other at the extreme rear end of the body are welded to the boxside rails.

Heavy duty roof bows are used providing greater strength to the roof panel. The front door hinge pillar is one continuous piece from the roof rail to the body sill. Sheet metal seams overlap for improved sealing. Metal cages, welded to the outside of the cowl side panels, enclose the retaining nuts for attaching fenders and hood hinge supports. Inner hinge reinforcements assure door alignment and maintain proper door adjustment.

The radiator support, fender wheelhousings and cowl panels are attached to the body, adding structural strength to the fore-structure and the body assembly.

An integral fore-structure assembly, extending forward of the front passenger compartment, is bolted to the "Unibody" with ten body bolts, eight of these lie in a fore-and-aft position and two in a transverse position.

# MAINTENANCE AND CARE

## (APPEARANCE—DRAIN HOLES—LUBRICATION)

## INDEX


| | Page |
|---|---|
| APPEARANCE | |
| Acrylic Finishes—Polishing | 4 |
| Bright Metals—Polishing | 4 |
| CONVERTIBLE | |
| Backlight | 2 |
| Boot | 2 |
| Top | 2 |
| Well | 2 |
| GENERAL INFORMATION | 1 |
| GLASS | 5 |
| INTERIOR TRIM | |
| Cargo Area (Station Wagon) | 4 |
| Carpets & Rubber Mats | 4 |
| Color Restoration or Change | 4 |
| Door Panels | 3 |
| Floor Covering | 4 |
| General Instructions | 2 |
| Glove Compartment | 4 |
| Headliners | 3 |
| Kick Pad Panels | 3 |
| Luggage Compartment | 4 |
| Package Shelfs | 3 |
| Sealers—Leather & Vinyl | 4 |
| Seats | 3 |
| Spots & Stains | 2 |
| Test for Material Type | 2 |
| POLISHING | |
| Acrylic Finishes | 4 |
| Bright Metals | 4 |
| Scratches & Overspray | 4 |
| TIRES | 4 |
| VINYL ROOF COVERING | 2 |
| DRAIN HOLES | 5 |
| LUBRICATION | 5 |


## GENERAL INFORMATION

The procedures for maintaining the "new car" appearance of the materials covered in the APPEARANCE section are those most generally used. The final results may vary due to the application of the agents by persons inexperienced at this work and also from the type of foreign element on the material. For satisfactory results, appearance maintenance should be performed by qualified experienced personnel using the recommended agents and established service procedures.

MyMopar.com

# APPEARANCE

## CONVERTIBLE

**Never lower a wet top. Dampness may cause formation of mildew, and damage to the fabric will result.**

**Top**—Frequent brushing and vacuuming will keep the top free of abrasive dust and dirt. When washing, convertible top material should be thoroughly wet. **For scrubbing, use only a soft, natural bristle hand scrub brush. Use warm water and naptha bar type soap as the cleaning agent. Do not wash in direct sunlight.** Scrub the top with soap suds, starting in the center and gradually working toward the edges. Rinse with plenty of clean water to remove all traces of soap. Allow to dry completely before lowering.

**Backlight—Do not use a towel, sponge or chamois to apply the suds or dry the window, otherwise the surface may be scratched.** The backlight (rear window) is made from a flexible vinyl plastic material.

To clean the window, rinse with a cold water spray to remove grit and dirt. Lather the surface with suds of a mild soap, using the palm of hand. Rinse thoroughly and allow to air dry.

If this procedure does not clean the window thoroughly, a solution of 40 per cent rubbing alcohol and 60 per cent clear water should be used. Apply with palm of hand and rub surface of window with circular motion. Use the rubbing alcohol and water solution generously.

**Top Boot and Well**—Remove all abrasive dust and dirt from the boot and well by brushing or vacuuming. For scrubbing, use only a soft, natural bristle hand scrub brush. Use warm water and naptha type bar soap. Make certain the drain is open in the well. Rinse with plenty of clean water to remove all traces of soap. Use a soft absorbent towel to dry the material.

## VINYL ROOF COVERING

**Do not use volatile cleaners or solvents on the top covering.**

**Wash the top covering with mild soap and lukewarm water, lathering well with a soft brush, cloth, or sponge. Avoid heavy brushing. Rinse all traces of suds away with clear water. Rinse all soap suds from the paint finish.**

## INTERIOR TRIM

Most stains can be removed quite easily from fabrics while they are fresh and have not hardened and set into the fabric. An exception is mud or clay, which should be allowed to dry so that most of it can be brushed off. It is also very helpful, though often not possible, to know the nature of the staining matter so the correct cleaning agent may be used.

**General Instructions:** Use a piece of clean cotton cheesecloth approximately 3″ x 3″. Squeeze most of the liquid from the fabric and it is less likely to leave a ring. Wipe the soiled fabric very lightly with a lifting motion. Always work from the outside toward the center of the spot. Turn the cheesecloth over as soon as one side becomes stained to prevent working the stain matter back into the cleaned portion of the fabric. Use a new piece of cheesecloth as soon as both sides become stained.

**Testing For Type of Material**—Natural cloth will burn like string, slow and smoky. Synthetic material such as nylon, burns fast and "balls up" into a hard mass. Sample material for testing can be found under the seat cushion, sun visor and dome light brackets, or back of the trim panels. Another method of testing is to rub the back of a fingernail over the surface of the material. Synthetic materials appear to "whistle" when this is done.

**Spots and Stains—When using water to remove a spot, be sure to wash entire section after spot has been removed to avoid water stains.** Before cleaning seats, door panels, headliner, etc., remove as many spots as possible.

Use a pocket knife or putty knife to break up and remove any encrusted foreign matter. Vacuum thoroughly.

Apply the recommended spot removing agent with a clean cloth or sponge. Work in a wide circle to prevent making a ring and work toward center.

**Surface Spots**—may be brushed out with a small hand brush. Exercise extreme care not to damage the fabric when brushing.

**Deep Penetrating Spots**—work the spot removing agent in by brushing. When the spot is thoroughly worked and saturated, use high air pressure to blow the dirt down through material. In extreme cases the entire spot may not be removed and it will then be necessary to cover the area with a light application of dye.

**Water Stains**—Water stains in fabric materials can be removed with a cleaning solution made from one cup of ordinary table salt and one quart of water. Vigorously scrub the solution into the stain, then wash with clean water. Water stains in nylon and other synthetics should be removed with commercial type spot remover, compounded for the specific material being cleaned.

**Mildew**—Clean area around mildew with warm suds. Rinse with cold water, soak mildew area with solution of one part common table salt and two parts water, then wash with the recommended upholstery cleaner.

**Rust Stains—Keep rust remover solution away from your skin. Wash hands immediately if exposed Clean extra well under fingernails. Read instruction:**

MyMopar.com

**on the bottle before using.** Dampen the stained area with water. Apply a commercial rust remover solution, available at dry cleaning suppy or chemical supply houses.

Sponge with clean water to clean rust from upholstery buttons. **Wrap a small strip of cloth around each button to avoid leaving a ring on upholstery material.** Moisten button with a few drops of water applied with a small piece of sponge or cloth. Apply one or more drops of rust remover. Fast dry clean areas with heat lamps.

**Chewing Gum and Tar**—Avoid using spotting or cleaning solution that will dissolve or soften gum or tar. Place a cube of ice on gum or tar to harden it. Remove as much of the gum or tar as possible with a dull knife when it is in this hardened state. Moisten remainder with cleaning fluid and scrub clean. In some cases soak with cleaning fluid and blow the stain through using high air pressure.

**Ice Cream and Candy**—Use a dull edged pocket knife or putty knife to remove as much substance as possible from the surface of upholstery. Be careful not to damage fibers of upholstery. Most candy has a sugar base and can be removed by rubbing area with a cloth wrung out in warm water. An **oily type of candy,** after using warm water, should be cleaned with an upholstery type cleaner that will emulsify with the oil. Rinse with water and remove the remaining stains with cleaning fluid.

**Bloodstains**—In removing bloodstains, **Never use warm or hot water.** Use a clean cloth wrung out in cold water and rub the stain. If this does not completely remove the stain, use spot remover or vinyl cleaner and apply it with a brush.

**Wine or Alcohol**—Scrub the stain with a cloth moistened in luke warm water. **Avoid use of soap,** as it has a tendency to set the stain. The remaining stains can be removed with a regular cleaning solution.

**Shoe Polish**—Scrub area with a cloth saturated with cold water. Remove wax base polishes by sponging with spot remover.

**Grease, Oil, Lipstick and Related Stains**—Use spot remover to avoid leaving a "ring." Start cleaning operation from outside of spot and work toward the center. When the spot has been removed, dry fabric with a clean cloth.

**Headliners—Cloth Type**—Mix a cleaning solution of water and a foaming type upholstery cleaner (as shown on the container) to produce thick suds. Use **only** foam when cleaning headliner as saturation with liquids may result in streaks, spots or shrinking.

**On nap type, lay down nap, usually left to right. Do not stop, when washing a headliner. Complete the entire operation at one time using the same cleaning solution.**

Starting in the left rear corner, clean only one or two sections at a time. Thoroughly work suds into the cloth with a natural sponge. Use circular or short back and forth strokes to remove all the dirt. The amount of dirt determines the effort needed. When headliner appears clean and the sponge glides easily, leaving an even distribution of foam, finish cleaning with sweeping motions in one direction.

**Hard Board Type**—Apply a solution of upholstery cleaner and water with a sponge. Use a circular or short back and forth stroke, wipe clean with a cloth. If this type of headliner is extremely dirty, wash with vinyl cleaner using the same procedure.

**Vinyl Type**—Apply vinyl cleaner with a sponge (or if extremely dirty scrub with a brush) wipe clean with a dry clean cloth.

**Seats and Door Panels**—Mix one pint of upholstery cleaner to one gallon of water. If seats or door panels are extremely dirty, add more upholstery cleaner to mix.

Apply cleaning solution with a scrub brush or sponge. Scrub thoroughly only one section at a time. Avoid over soaking the material. Frequently stains that show when material is damp will disappear when dry. Use care not to injure the fabric being cleaned by attempting to brush out "stubborn" spots. Spots should be removed before washing. After each part has been scrubbed, remove loosened dirt by rubbing down the area briskly with a clean cotton towel or soft rag. Make final strokes in one direction. **Do not soak around buttons.**

**Nylon or Synthetic Fabrics**—For average conditions use methods and materials as used in washing cloth upholstery. When material is extremely dirty, use multi-purpose cleaner full strength and a stiff scrub brush. Scrub thoroughly in all directions. Wipe off dirt and excess cleaner with a clean cotton towel. or soft rags.

**Leather, Leatherette or Vinyl Fabric**—Use multi-purpose cleaner full strength and a stiff scrub brush. Apply to surface to be cleaned, let soak for two (2) minutes then scrub thoroughly, making sure to clean between all seams and in all cracks and underneath beading. Wipe dirt and excess material off with clean cotton toweling or soft rags.

**Package Shelf—Hard Board Type**—Clean using a solution of upholstery cleaner. **Wipe dry immediately.** Avoid water logging the backing.

**Vinyl Type**—Clean using multi-purpose cleaner. Wipe dry with clean toweling or rags.

**Kick Pad Panels—Leather—Vinyl—Metal Types**—Use multi-purpose cleaner full strength. Use a stiff brush and apply cleaner to surface. Allow cleaner to set (2) two minutes, then scrub thoroughly. Clean all seams, cracks and beneath beading. Wipe dry with a clean soft towel or rags.

MyMopar.com

**Glove Compartment**—Vacuum thoroughly. Clean with upholstery cleaner or vinyl cleaner. **Some glove compartments are made of a cardboard type material. Do not waterlog.**

**Floor Covering—Rubber Mat**—Vacuum thoroughly. Clean mat with upholstery cleaner or multi-purpose cleaner. Use toweling or rags to wipe up dirt and excess cleaners.

**Carpeting**—Thoroughly vacuum. Mix one pint of upholstery cleaner to one gallon of water. If carpet is faded, discolored or spotted, add upholstery tint to this solution. To determine the right color shade, pour a small amount of tint at a time. Check by dipping a white rag into solution, wring out and see if that is the right shade. Remember, the dye will dry a shade or two darker. With a stiff brush use the solution to scrub the carpet vigorously. Lay the nap down in one direction. When carpets are dry, fluff them up by rubbing with a brush.

**Salt Stains** can be removed by first vacuuming the carpet thoroughly to remove as much salt and dirt as possible. Mix a solution of ordinary table salt and water. Use a heavy concentration of salt. Soak the stained area to loosen the embedded salt (use a wire brush, if necessary). Wash the entire carpet with the recommended cleaner. More than one washing may be necessary to effect a satisfactory result.

**Luggage Compartment**—Remove the spare wheel-tools floor covering and all other items. Vacuum the area thoroughly. Use a steel brush to loosen rust and caked dirt. Wash with upholstery cleaner or multi-purpose cleaner. Wipe dry with clean toweling or rags.

**Cargo-Area (Station Wagon)**—Follow same procedure used for Luggage Compartment.

**Color Restoration or Change**—In those instances in which stains persist, after cleaning, or a change in color is desired on trim material, dyes or tints can be applied. **The instructions for mixing and applying the color must be followed precisely.** Not all tints and dyes give satisfactory results. Use only those recommended for the exact material being worked on. To accomplish the "new car" appearance, tints and dyes should be applied by reliable experienced personnel.

**Leather and Vinyl Sealers**—Used for repairing holes or tears on seats, arm rests, cargo area of station wagons, etc. To repair, cut a piece of leather or vinyl about ½ inch larger than the area being repaired. Position the patch under the hole and apply sealer to the contacting areas. Place a piece of masking tape over the tear to hold the torn edges in place until sealer dries. After sealer has dried, remove the tape and trim all visible rough edges. Fill any visible cracks with sealer. **Use a step application procedure in filling deep cracks.** After sealer has thoroughly dried, sand lightly with #400 grade sandpaper until the surface is smooth. Apply the desired shade of color to the repaired area.

## POLISHING

**Acrylic Finishes**—To retain the "new car" look of the car exterior surface, the acrylic finish should be polished at least twice a year to remove all film. When polishing use one pad made from folded cheesecloth or an old "turkish" towel to apply the polish and another pad to remove the dried film. Test the polished area by rubbing with the fingers. If surface is not thoroughly cleaned, smears of the polish will show where the fingers were rubbed.

**Sand Scratches—Overspray—Foreign Material**—Minor conditions such as these can be removed from the acrylic finish using the following procedure:

1) Oil sand (oleum spirits, mineral spirits or kerosene) the affected surface by hand with No. 660 grit paper.

2) Remove all sanding sludge.

3) Machine polish the sanded surface using rubbing compound until the surface is completely free of sand scratch marks. Blend with adjacent areas.

4) Buff the surface with a clean lambs wool pad using a liquid type final polish. If the appearance of the polished area is noticeably different than adjacent areas, completely buff the adjacent panels, and if necessary, the complete side or horizontal surfaces to assure uniform appearance.

5) Use a clean, soft cotton cloth to hand clean all inaccessible areas. **Do not use cheesecloth.**

6) Remove all traces of polish or rubbing compound from mouldings, medallions, nameplates or any other exterior ornamentation.

**Bright Metals**—Such as bumpers, grilles, exterior mouldings, wheel covers, mirrors and etc. should be thoroughly cleaned at least twice a year to maintain a new look condition. The recommendations of the cleaner product manufacturer should always be followed. Remove all materials used to protect the bright metal. **Use care not to allow the removing agent to come into contact with the acrylic finish.** Clean the bright metal thoroughly and remove all traces of cleaner from corners, etc. After cleaning thoroughly, apply and rub out a coat of good body wax to the bright metal. During the winter months and in areas in which salt is used on the roads, do not rub out the wax.

Frequent washing of bright metals, by steam, will necessitate more frequent applications of the protective wax.

When cleaning anodized aluminum, use care not to rub through the anodized coating.

## TIRES

White sidewall tires should be cleaned using a stiff bristle brush and white sidewall cleaner or multi

MyMopar.com

purpose cleaner. After washing, rinse with clean water. **Do not clean** tires with scouring powder, steel wool or other abrasive type cleaners. Scuff marks can be dressed down by sanding lightly with #400 sand paper.

## GLASS

Interior glass surfaces should be thoroughly cleaned weekly to remove all traces of smoke and other films resulting from fingers, exhaust fumes, dusts, moisture, etc.

Exterior glass surfaces having an oily film are easily and best cleaned with the use of a commercially made cleaner compounded for that particular application. **Do not** scrape off smears from bugs, road tars or other similar objects, use warm water or the necessary type solvent to remove.

During the winter months, snow, ice and frost can be removed with a plastic or rubber type scraper, or with a commercially made solvent. Do not remove ice or other objects from the glass by chipping. **Do not** use putty knives, razor blades, steel wool or any other metal object to remove deposits from the glass.

## DRAIN HOLES

The drain holes in the bottom of the cowl plenum chamber, doors and floor sills (rocker panels) should be inspected regularly to insure drainage. Road tars, mud and similar other foreign matters should be removed immediately. Should bare metal be exposed, surface treat the metal and refinish as necessary.

The drain holes in the quarter panel well areas are sealed with a removable plastic plug. The plugs should only be removed whenever it is necessary to clean or drain fluids from the well area.

## LUBRICATION

To maintain ease of operation, the hood, door, deck lid and tail gate hinges should be lubricated at the recommended intervals with the recommended lubricants. Refer to the Lubrication and Maintenance Group for the type of lubricant to be used and the lubrication points.

## SHEET METAL—DOORS—EXTERIOR MOULDINGS

### INDEX


| | Page Belvedere—Satellite | Page Fury | Page Valiant Barracuda |
|---|---|---|---|
| ALIGNMENT | | | |
| Deck Lid | 66 | 66 | 66 |
| Doors | 14 | 14 | 14 |
| Fenders | 10 | 10 | 10 |
| Grille | 12 | 12 | 12 |
| Hood | 7 | 7 | 7 |
| Tail Gate | 59 | 59 | 59 |
| BUMPERS—Front | 12 | 12 | 12 |
| Rear | 12 | 12 | 12 |
| COWL PANEL AND VENT | | 6 | |
| DECK LID | | | |
| Alignment | 66 | 66 | 66 |
| Hinge | 66 | 66 | 67 |
| Lock | 67 | 67 | 67 |
| Replacement | 66 | 66 | 66 |
| Torsion Bars | 67 | 67 | 67 |
| Weatherstrip | 67 | 67 | 67 |
| DOORS | | | |
| Alignment—Front | 14 | 14 | 14 |
| Rear | 15 | 15 | 15 |
| Arm Rests | 16 | 16 | 16 |
| Glass | | | |
| Convertible | | | |
| Adjustments | 40 | 37 | 41 |
| Regulators | 40 | 37 | 36 |
| Replacement | 40 | 38 | 42 |
| Run Channel | 41 | 37 | 36 |
| Hardtop | | | |
| Adjustments | 40 | 37 | 41 |
| Regulators | 40 | 37 | 36 |
| Replacement | 40 | 38 | 42 |
| Run Channel | 41 | 37 | 36 |
| Sedan—Front | | | |
| Adjustments | 30 | 24 | 31 |
| Regulators | 30 | 26 | 32 |
| Replacement | 30 | 25 | 32 |
| Run and Channel | 31 | 29 | 32 |
| Vent Wing | 30 | 24 | 31 |
| Sedan—Rear | | | |
| Adjustments | 34 | 32 | 36 |
| Hinge | 16 | 16 | 16 |
| Lock | 18 | 18 | 18 |
| Remote Control | 17 | 17 | 17 |
| Replacement | 16 | 16 | 16 |
| Striker and Rotor | 15 | 15 | 15 |
| Trim Panels | 17 | 17 | 17 |
| Watershields | 17 | 17 | 17 |
| Weatherstrips | 23 | 23 | 23 |
| Windcords | 23 | 23 | 23 |
| EXTERIOR MOULDINGS | 67 | 67 | 67 |
| FENDERS | 10 | 10 | 10 |
| GRILLE | 12 | 12 | 12 |
| HOOD | 7 | 7 | 7 |
| Alignment | 7 | 7 | 7 |
| Hinge | 10 | 9 | 9 |
| Lock | 9 | 9 | 9 |
| Replacement | 8 | 8 | 8 |
| Torsion Bars | 9 | 9 | 9 |


MyMopar.com

| | | | |
|---|---|---|---|
| Handles—Inside | 16 | 16 | 16 |
| Outside | 22 | 22 | 22 |
| QUARTER PANELS | 42 | 42 | 42 |
| GARNISH MOULDINGS | | | |
| Glass | | | |
| Convertible | | | |
| Adjustments | 52 | 47 | 57 |
| Regulators | 53 | 47 | 58 |
| Replacement | 53 | 47 | 58 |
| Stabilizer Channel | 54 | 48 | 59 |
| Track—Front | 53 | 48 | 58 |
| Weatherstrips | 24 | 24 | 24 |
| Hardtop | | | |
| Adjustments | 51 | 45 | 55 |
| Regulators | 52 | 46 | 57 |
| Replacement | 51 | 45 | 56 |
| Track—Rear | 52 | 46 | 57 |
| Sedan | | | |
| Adjustments | 50 | 43 | 54 |
| Regulators | 50 | 44 | 55 |
| Replacement | 50 | 42 | 55 |
| Run and Channels | 51 | 44 | 55 |
| Station Wagon | 23 | 49 | 59 |
| Handles | 42 | 42 | 42 |
| Trim Panels | 42 | 42 | 42 |
| Watershields | 17 | 17 | 17 |
| Weatherstrips | 23 | 23 | 23 |
| RADIATOR CORE SUPPORT | | | |
| Air Shield and Cross Bar | 12 | 12 | 12 |
| Replacement | 11 | 11 | 11 |
| TAIL GATE | | | |
| Alignment | 59 | 59 | 59 |
| Glass | | | |
| Adjustments | 61 | 61 | 61 |
| Regulators | 62 | 62 | 62 |
| Replacement | 61 | 61 | 61 |
| Run Channels | 63 | 63 | 63 |
| Handles | 60 | 60 | 60 |
| Lock | 60 | 60 | 60 |
| Replacement | 59 | 59 | 59 |
| Torsion Bar | 64 | 64 | 64 |
| Trim Panel | 60 | 60 | 60 |
| Weatherstrips and Seals | 64 | 64 | 64 |

# SHEET METAL—DOORS—EXTERIOR MOULDINGS

## COWL PANELS

### GRILLE PANEL (Fury)

#### *Removal*

(1) Remove windshield wiper arm and blade assemblies.

(2) Remove windshield lower moulding.

(3) Remove cowl grille attaching screws (Fig. 1) and grille.

#### *Installation*

(1) Inspect grille panel seating area for foreign material. Inspect plenum chamber inner seams, using a mirror and light, to make sure all seams are sealed.

(2) Position the grille panel on the cowl. Align attaching holes and install screws loosely.

(3) When tightening screws, use care not to overtighten.

(4) Install windshield lower moulding.

(5) Install the wiper arm and blade assemblies. Test for correct positioning.

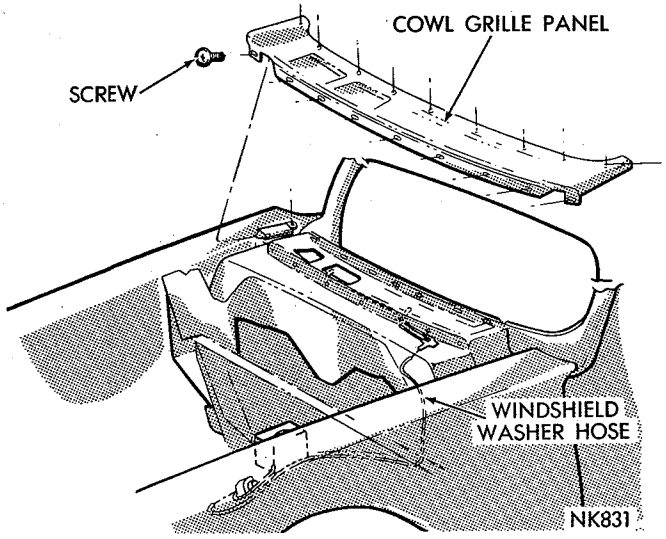


*Fig. 1—Cowl Grille Panel—Fury*

### TRIM PANEL—SIDE COWL

The side cowl inner trim panel (Fig. 2) is attached to the panel with screws and at the rear lower edge under the floor sill stop plate. A silencer pad is used between the trim panel and cowl panel.

### FRESH AIR VENT—Fury

Service procedures for other models are covered

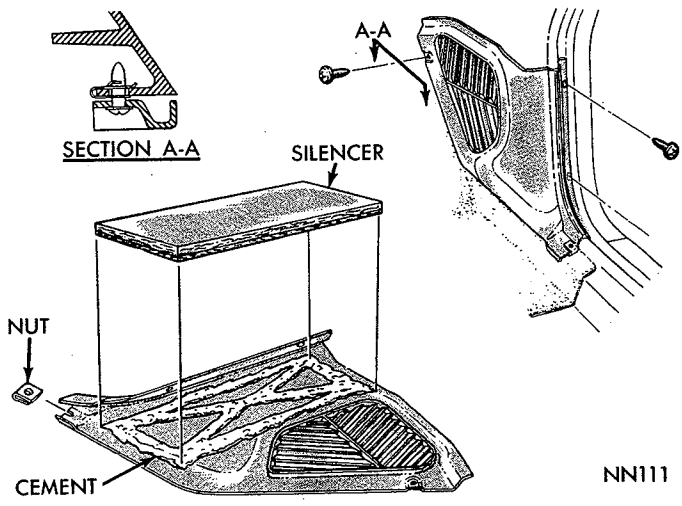


*Fig. 2—Side Cowl Trim Panel*

MyMopar.com

in the Heater Section of the Accessory Group.

## CONTROL CABLE

### Replacement

The fresh air cowl vent control cable, housing and knob (Fig. 3) are serviced as an assembly. The cable housing shank has two flat edges which index with corresponding edges in the panel (Fig. 3) and is retained on the panel with a nut at the rear. The housing is attached to the vent door bracket with a clip and the coiled cable end is positioned over a pin on the door (Fig. 4).

### Adjustment

Adjustment of the door is controlled by the positioning of the control cable housing on the door bracket (Fig. 4). Loosen the clip screw attaching the housing to the door bracket and push control cable knob to the fully closed position. Hold the vent door closed and pull cable housing slack out of the door flange. Tighten the clip screw after all housing slack has been removed and test the operation of the cable and door.

## VENT DOOR—Fury

### Removal (Fig. 4)

(1) Remove cowl side trim panel and silencer.
(2) Remove clip attaching actuator cable housing to door bracket.
(3) Slide cable coiled end off of pin on door.
(4) Slide cable out of door frame flange.
(5) Remove screws attaching door to cowl side panel.
(6) Remove door and seal assembly.
(7) Inspect seal for damage.

### Installation

(1) Install spring nut to bottom of fresh air door housing, if removed.
(2) Position seal in line with outer edge of housing flange (Fig. 4).
(3) Position fresh air door on cowl side panel and align attaching holes.

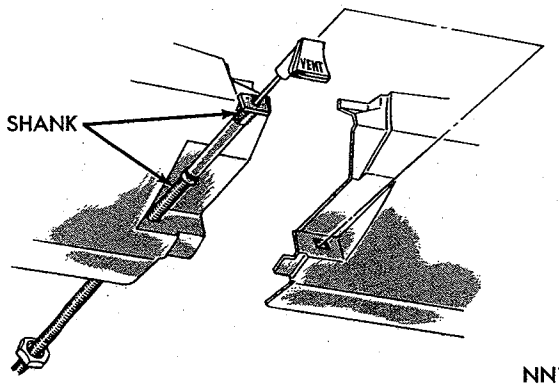


*Fig. 3—Vent Door Control—Fury*

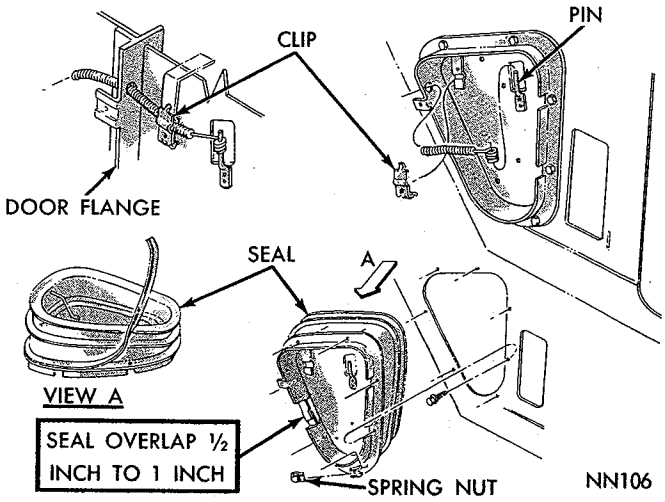


*Fig. 4—Fresh Air Door—Fury*

(4) Install attaching screws and tighten progressively.
(5) Insert actuator cable assembly through hole in door frame flange and install coiled end of cable over pin on door.
(6) Position clip over cable and attach to door bracket. Pull out cable slack and tighten attaching screw securely.
(7) Test operation of door and actuator cable.
(8) Install trim panel and silencer.

# HOOD

## ALIGNMENT

Prior to making any hood adjustment, inspect clearances and alignment of hood sides in relation to cowl, fenders and grille. The cowl adjustment must be made first.

### Hood to Cowl

(1) Inspect alignment at cowl for tightness, looseness, uneven gap and high or low elevation at corners.
(2) Scribe hinge position on hood.
(3) Loosen hood attaching bolts (Figs. 5, 6 and 7) and move hood to desired position to correct alignment at cowl.
(4) Tighten attaching bolts 180 inch-pounds.
(5) After Step 4, if rear of hood and fender are not flush, reset fender to align with cowl and hood.

### Hood to Fender

After completing previous step 5, inspect the front of the hood to fender clearance. This clearance is adjusted by removing the hood bumper and turning the adjusting screw in or out (Fig. 8). It may also be necessary to loosen the fender attaching bolts and move the fender up or down to the desired position.

### Unequal Spacing Between Rear of Hood and Fenders

(1) Loosen four hinge-to-hood attaching bolts on

MyMopar.com

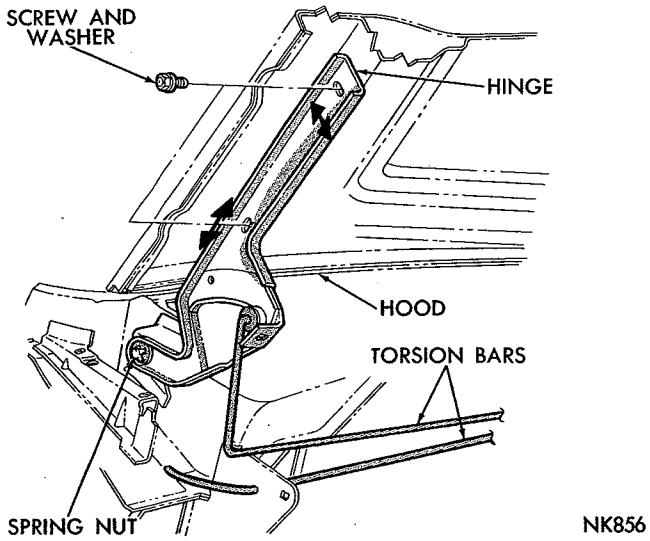


*Fig. 5—Hood Adjustment—Fury*

each side of hood.

(2) Shift the hood (at rear) in direction of wide space, until spacing appears to be equal on each side.

(3) Tighten the hinge-to-hood bolts, lower hood and inspect unit. When spacing is correct on one side only, loosen the hood to hinge bolts on side to be adjusted. If the hood needs to be moved out, insert a large screwdriver between the upper hinge plate and the hood flange. Force the hood out as required. While holding pressure on screwdriver, tighten bolts securely.

To move the hood in, apply pressure on the outside edge of hood, then tighten bolts securely. Lower hood and inspect fit.

### Hood Projects Beyond Front of Fender

If hood projects beyond front fender, and fender to door spacing is close, the fender can be shifted forward to correct this condition.

### Hood Side Contour Does Not Follow Fender

When the side contour of the hood does not follow curve of the fender, the hood should be reshaped.

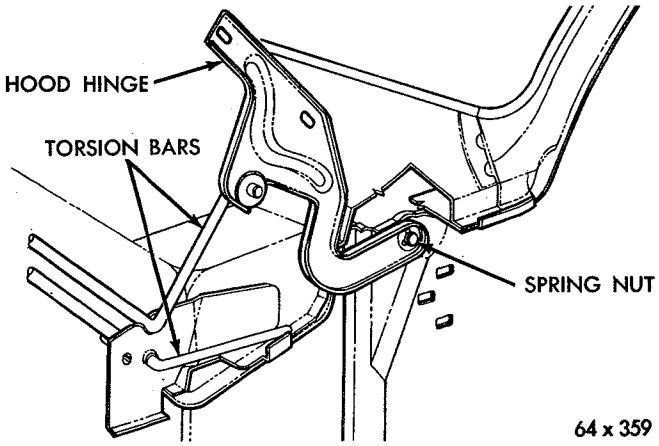


*Fig. 6—Hood Adjustment—Valiant*

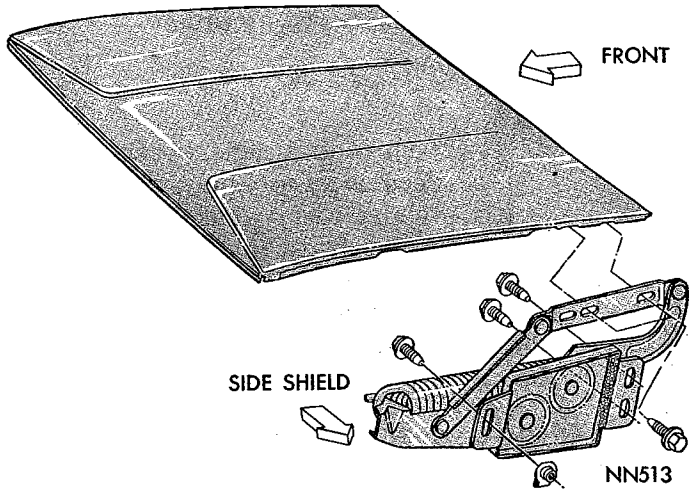


*Fig. 7—Hood Adjustment—Belvedere—Satellite*

(1) Insert a small block of wood (about 1 inch square) between fender flange and hood, just opposite the low spot on the hood.

(2) Close hood slowly. With hands placed just ahead of block, gently apply pressure to hood.

(3) Repeat this operation about every six inches until contour of fender and hood conform evenly.

## REPLACEMENT

### Removal

(1) Place a protective covering over cowl and fender area.

(2) Mark outline of hinges on hood to aid in installation.

(3) With an assistant, remove hinge-to-hood attaching bolts and remove hood assembly. Use extreme care not to permit hood to slide rearward and damage painted surfaces of the cowl and fender areas.

### Installation

(1) With an assistant, position hood on hinges and install hinge to hood bolts. Do not tighten.

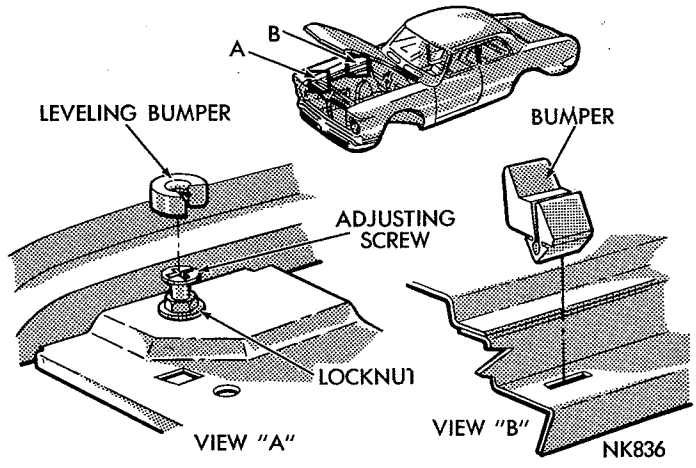


*Fig. 8—Hood Leveling Adjustment*

MyMopar.com

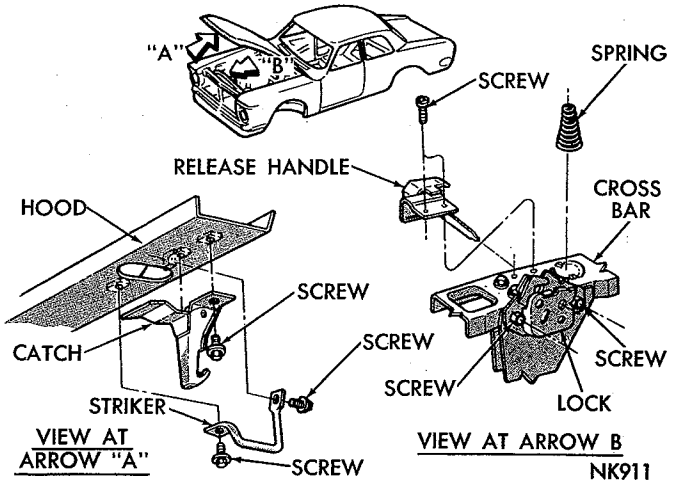


*Fig. 9—Hood Lock and Striker—Fury*

(2) Align scribe markings on hood with hinge and tighten screws lightly.

(3) Close hood and inspect hood alignment.

(4) Adjust the alignment as necessary and tighten the hood to hinge bolts 180 inch-pounds.

(5) Remove protective covering from cowl and fender area.

## LOCK

To adjust the lock (Figs. 9, 10 and 11) loosen the attaching screws and raise or lower until the correct adjustment has been obtained. After making any adjustment that requires a shifting of the hood, always inspect the hood striker and the lock plate assembly for alignment.

### *Torsion Bar Replacement*

(1) Disengage the torsion bar roller (Fig. 12) from its seat on hood hinge by forcing the roller end of bar to the rear and raising hood fully.

(2) Disengage left hand torsion bar roller from hood hinge.

(3) Remove hood assembly.

(4) Remove torsion bars from center support and remove bars from end reinforcements.

(5) Lubricate torsion bar rollers and install on hinges.

(6) Install hood assembly and adjust alignment.

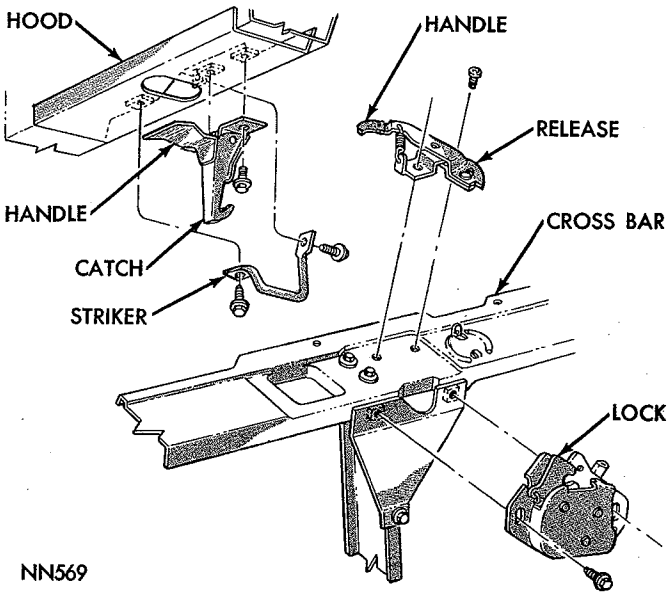


*Fig. 11—Hood Lock and Striker—Belvedere—Satellite*

## HINGE REPLACEMENT

### *Fury—Valiant Models*

(1) Disengage torsion bar roller from hood hinge.

(2) Scribe hinge location on hood and remove hinge to hood screws.

(3) Support hood at hinge area.

(4) Remove the cowl grille panel (Fig. 1).

(5) Remove hinge pivot nut from pivot (Figs. 6 and 13) and remove hinge.

(6) Lubricate hinge pivot area with lubriplate and position hinge on pivot.

(7) Using a socket with putty placed on end, position a new spring nut on putty and position on pivot. Press spring nut on pivot using a screw driver.

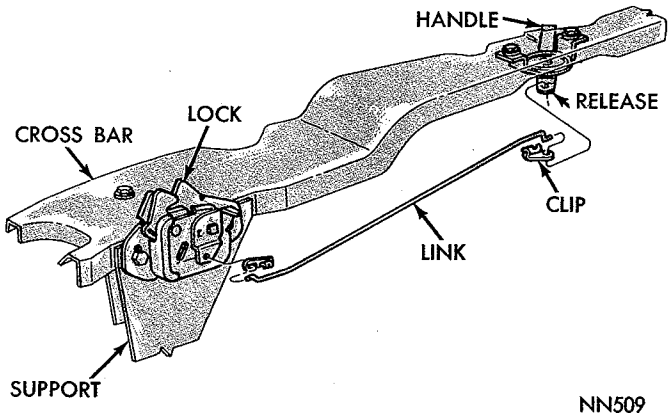


*Fig. 10—Hood Lock and Striker—Valiant*

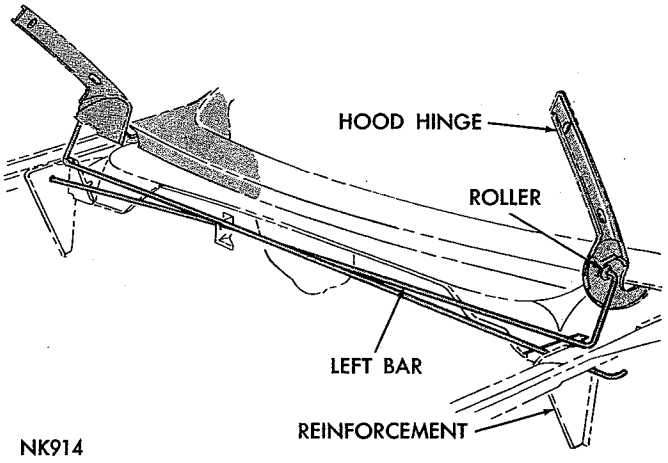


*Fig. 12—Hood Torsion Bars*

MyMopar.com

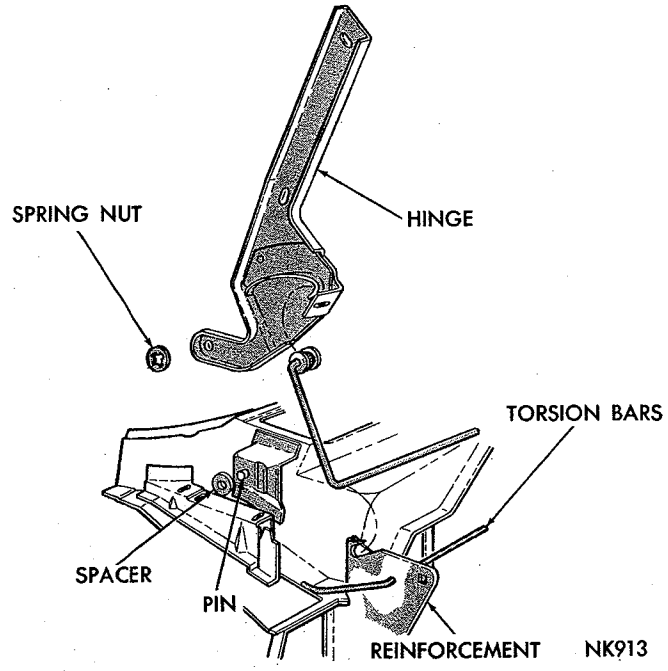


*Fig. 13—Hood Hinge—Fury*

(8) Install cowl grille panel, lower windshield moulding and windshield wiper arm and blade.

(9) Remove hood support and position hinge on hood.

(10) Install hinge to hood screws and tighten to 180 inch-pounds after alignment has been accomplished.

(11) Engage torsion bar roller with hood hinge.

### Belvedere—Satellite Models

The hood hinge (Fig. 7) is attached to the hood by two screws and to the fender splash shield by three screws. Prior to removing the hinge mounting screws, prop the hood into the wide opening position. The prop should be positioned so the hood cannot move rearward.

## FENDERS

## ALIGNMENT

### Fender To Cowl

Raise the hood and loosen the fender top screws. Force the rear edge of the fender away from the cowl with a screw driver. Retighten the fender screws.

### Fender Too Low At Sill Panel

Loosen fender-to-cowl attaching screws. Position a floor jack under the bottom rear edge of the fender. Protect fender edge with a **cloth pad.** Raise jack until the bottom edge of fender is in line with the bottom edge of the sill panel. Tighten the fender attaching screws and remove jack.

### Fender To Door Spacing

If hood projects beyond front fender, and fender to door spacing is too close, the fender can be shifted slightly forward.

(1) Loosen the screws attaching front fender to cowl side panel and move fender forward.

(2) When spacing between door and fender is correct, and hood is even with front end of fender, tighten fender to cowl screws securely.

### Fender Too Far Forward at Upper Door

Loosen fender-to-cowl attaching screws. Apply pressure to forward section of fender until correct alignment is obtained. Tighten fender-to-cowl attaching screws.

### Fender Below Level of Hood

If hood has been properly adjusted and one fender is still below level of hood at front, the fender should be raised.

(1) Raise hood, loosen screws attaching fender to radiator support.

(2) Place a wood block or cloth pad on lifting pad of a jack and install under front lower corner of fender.

(3) Raise jack slowly until fender is in alignment. Leave jack in place and tighten fender screws securely.

(4) Lower jack, close hood and inspect alignment.

(5) Adjust hood bumpers as required.

## REPLACEMENT

### Removal

(1) Disconnect battery ground strap.

(2) Tape leading edge of front door and cowl to fender area to avoid damaging paint.

(3) Remove front bumper assembly.

(4) Disconnect head lamp wires and remove nuts attaching grille extension to fender.

(5) Remove nuts and screws attaching fender to cowl, floor sill, wheelhouse or splash shields and radiator yoke (Figs. 14, 15 and 16).

(6) Remove fender assembly and if necessary remove fender mouldings, ornamentation and head light assemblies.

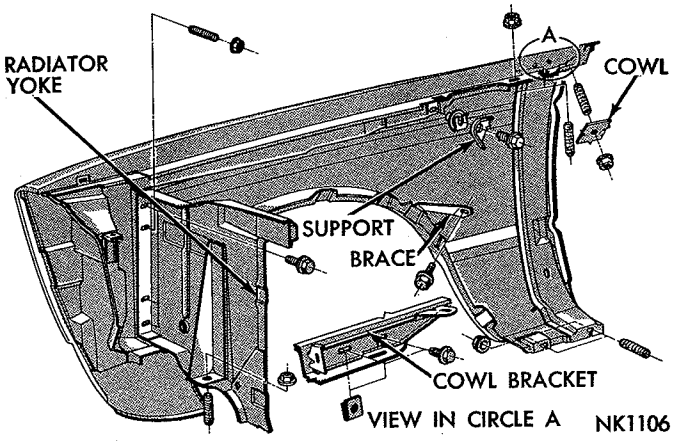


*Fig. 14—Fender Attaching Points—Fury*

MyMopar.com

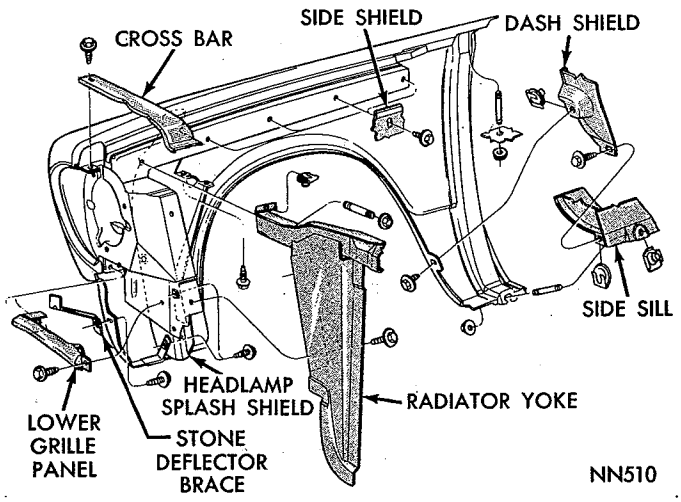


*Fig. 15—Fender Attaching Points—Valiant*

### *Installation*

(1) Install head lights, mouldings and ornamentation if removed.

(2) Carefully position fender on studs at cowl side area and align fender with mounting holes in radiator yoke. Install all mounting screws and retainer nuts.

(3) With fender correctly positioned, tighten all screws and nuts securely making certain fender is aligned at cowl and hood areas.

(4) Connect head lamp wires and install grille to fender nuts. Connect the battery ground strap.

## WHEELHOUSE (Fury Models)

To remove the wheelhouse assembly (Fig. 17) it is first necessary to remove the bumper and fender assembly. The wheelhouse, at the front end, is attached between the frame and radiator yoke (Figs. 14 and 17). When installing the wheelhouse make sure it is correctly aligned before tightening the screws.

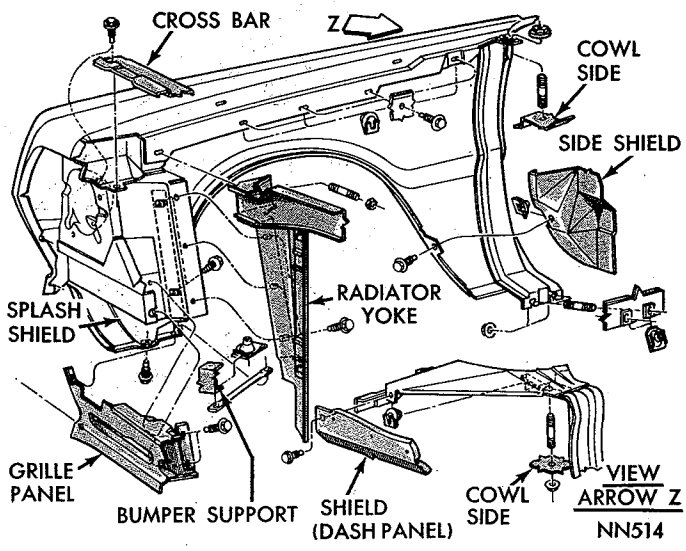


*Fig. 16—Fender Attaching Points—Belvedere—Satellite*

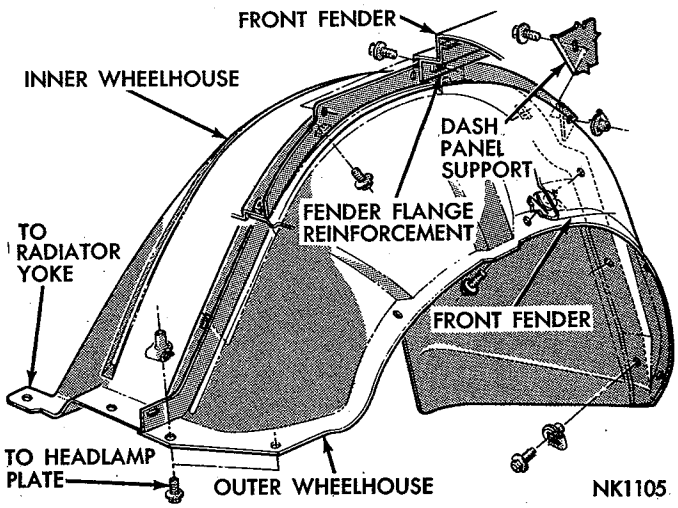


*Fig. 17—Wheelhouse Attaching Points*

# RADIATOR CORE SUPPORT

## REPLACEMENT

### *Removal*

(1) Drain radiator and remove hoses from radiator.

(2) Remove radiator attaching screws and radiator.

(3) Remove hood lock striker bar, horn and headlight wiring from core support.

(4) From under the fenders remove the wheelhouse to core support attaching screws.

(5) Remove support to frame attaching screws and remove radiator core support from engine compartment.

### *Installation*

(1) Position core support into the engine compartment. Install the frame to core support screws finger tight.

(2) From under the fenders, install splash shield to core support screws finger tight only.

(3) When all attaching screws have been installed, tighten them progressively.

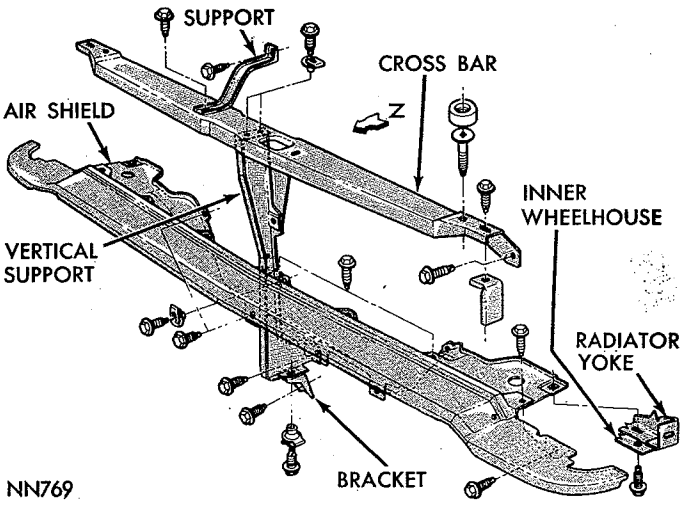


*Fig. 18—Air Shield and Cross Bar—Fury*

MyMopar.com

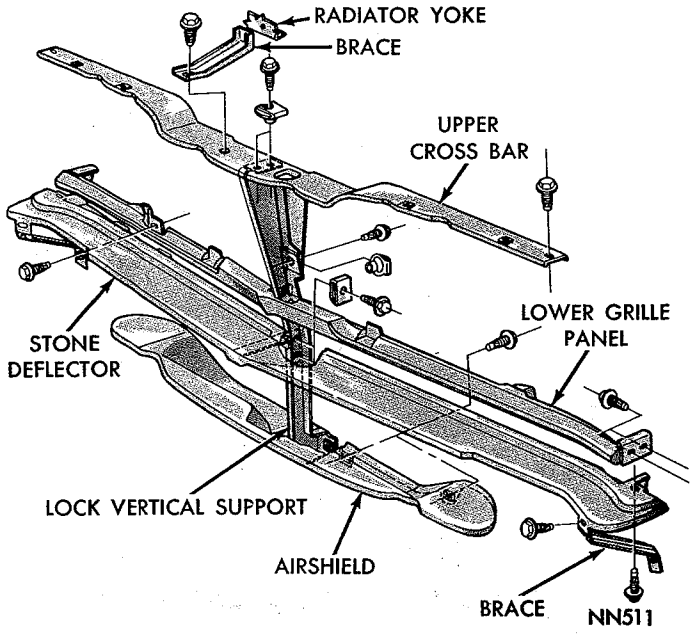


*Fig. 19—Air Shield and Cross Bar—Valiant*

(4) Attach the horn and light wires to the core support with the plastic straps.

(5) Install the radiator and hoses. Fill cooling system and inspect for leaks.

## AIR SHIELD AND CROSS BAR

Refer to (Figs. 18, 19 and 20) for the shield and cross bar attaching points.

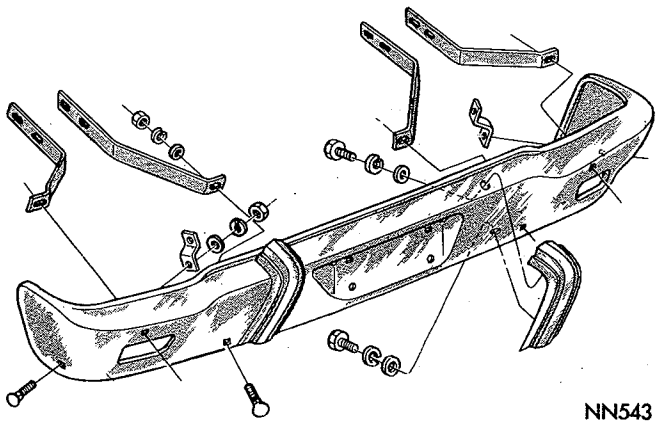


*Fig. 21—Front Bumper—Fury*

# BUMPERS

## FRONT BUMPER

Refer to (Figs. 21, 22 and 23) for front bumper attaching points.

## REAR BUMPER

Refer to (Figs. 24, 25 and 26) for rear bumper attaching points.

# GRILLE

## ALIGNMENT AND REPLACEMENT

Refer to (Figs. 27, 28 and 29) for grille attaching

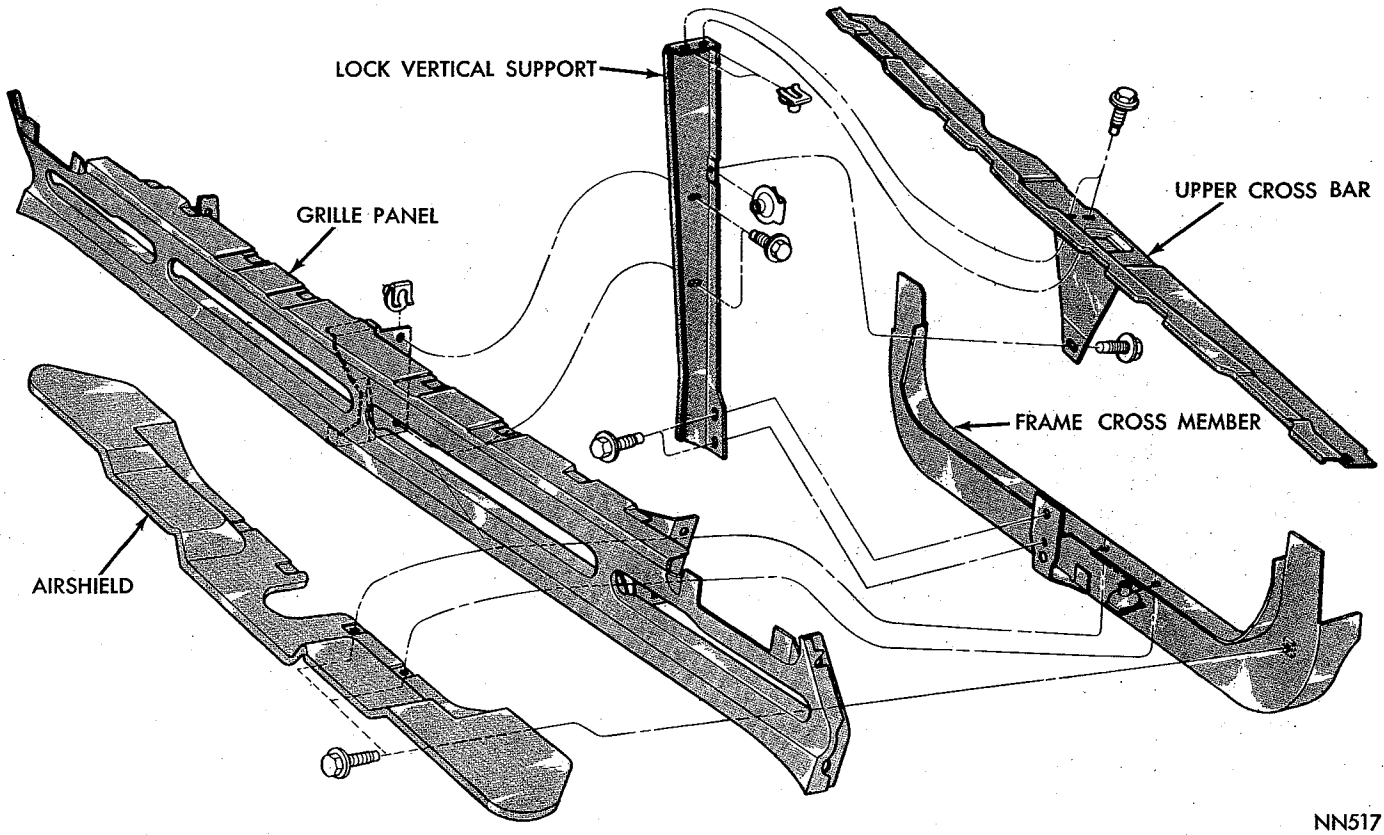


*Fig. 20—Air Shield and Cross Bar—Belvedere—Satellite*

MyMopar.com

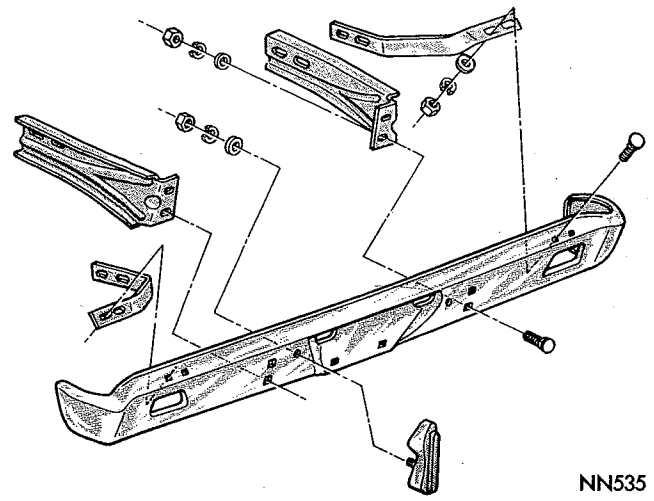


*Fig. 22—Front Bumper—Valiant*

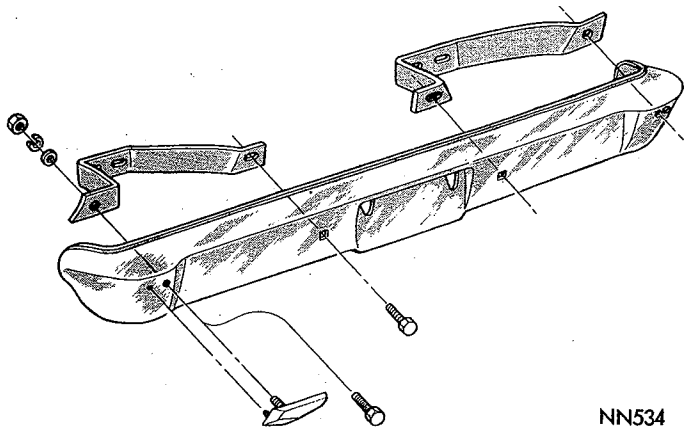


*Fig. 25—Rear Bumper—Valiant*

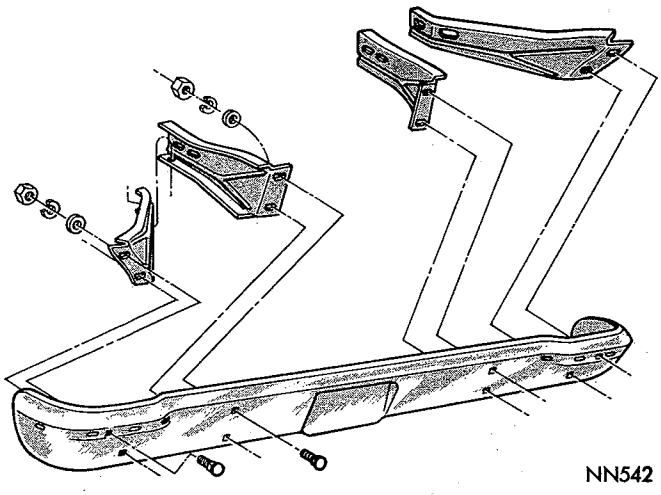


*Fig. 23—Front Bumper—Belvedere—Satellite*

## DOORS

The service procedures for internal door compo-

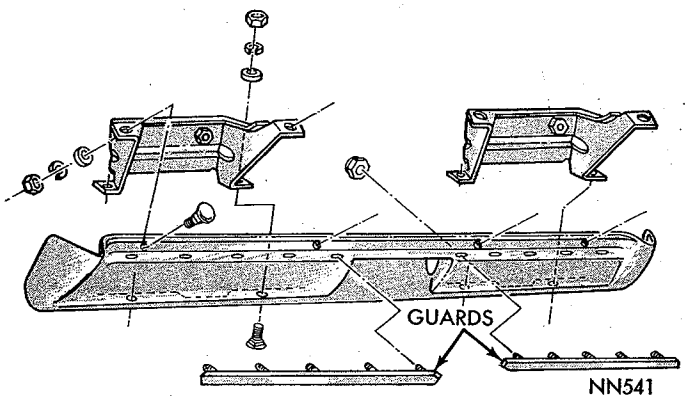


*Fig. 26—Rear Bumper—Belvedere—Satellite*

points. When assembling grille, install screws into points marked "X" on the left side first to laterally align grille to frame opening. The grille must be held against the front face of the fenders at the outer edges to avoid stressing or fracturing the die cast metal.

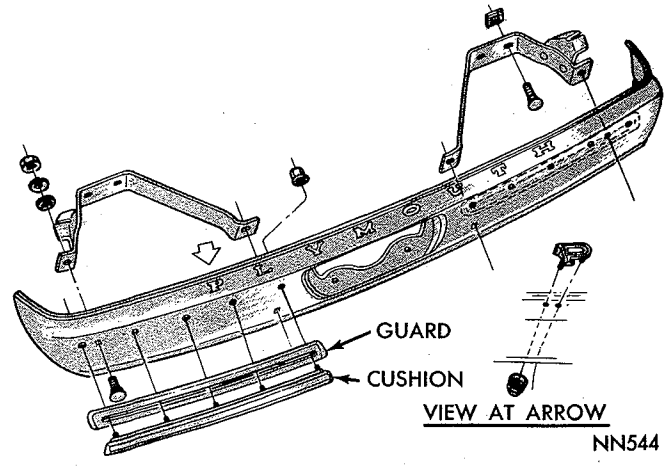


*Fig. 24—Rear Bumper—Fury*

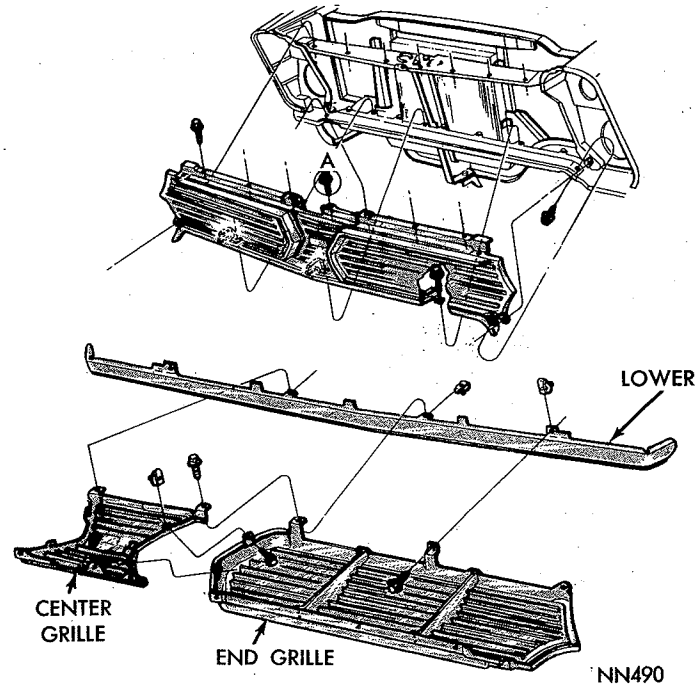


*Fig. 27—Grille Assembly—Fury*

MyMopar.com

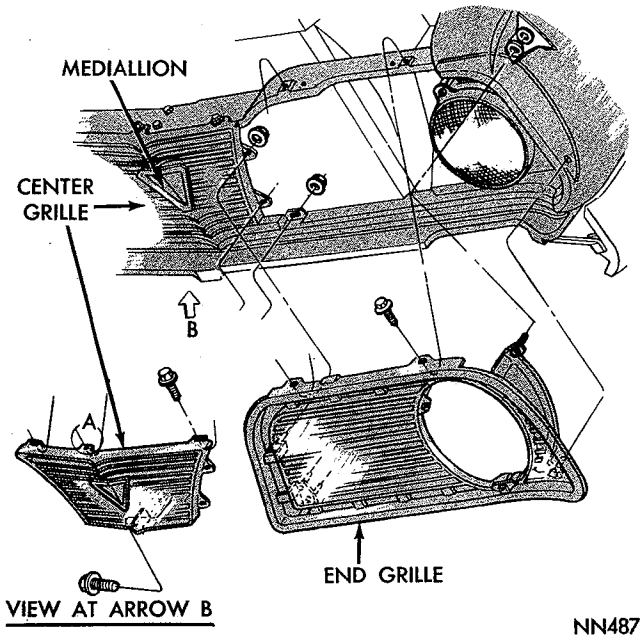


*Fig. 28—Grille Assembly—Valiant*

nents do not include obvious operations, such as removing door or quarter panel trim panels, testing operation of windows or inspecting glass fit after adjustments or replacement have been performed.

## ALIGNMENT

## FRONT DOOR

### *Up and Down*

"Up" or "down" adjustment of the door can be made at the front pillar or in the door itself (Figs. 30, 31 and 32).

(1) Scribe a line around upper and lower hinge straps.

(2) Place a wooden block on the lifting plate of a floor jack and position it under door (Support door near center of balance when attaching bolts are loosened).

(3) Loosen upper and lower door hinge attaching

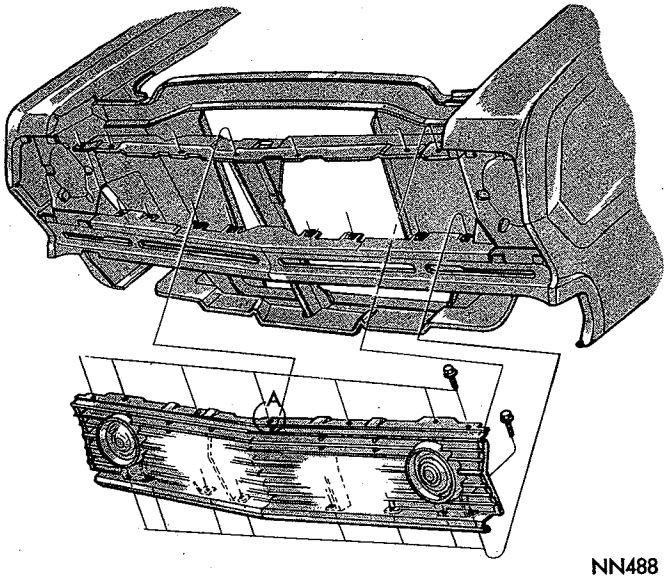


*Fig. 29—Grille Assembly—Belvedere—Satellite*

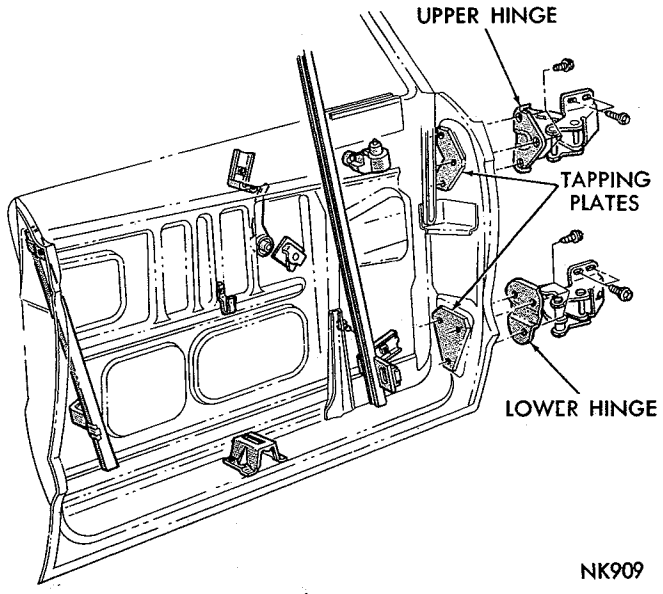


*Fig. 30—Front Door Hinge Attachment—Fury*

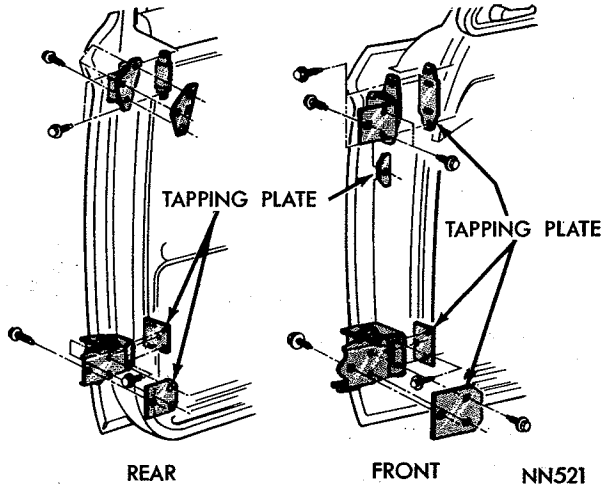


*Fig. 31—Door Hinge Attachment—Valiant*

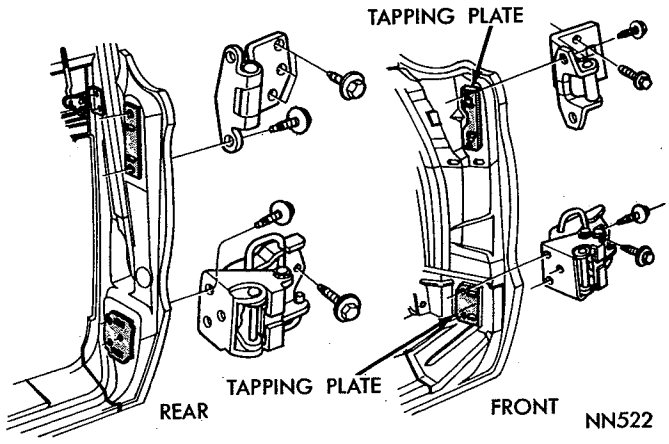


*Fig. 32—Door Hinge Attachment—Belvedere—Satellite*

MyMopar.com

bolts.

(4) Observing scribe mark, raise or lower jack until door is in the desired position.

(5) Tighten attaching bolts and remove jack.

(6) Open and close door several times and inspect clearance around all edges of door.

(7) Repeat steps 5, 6, and 7 until door is centered in door opening.

### Fore and Aft

(1) With door in a full open position (trim panel removed) scribe a line around upper and lower hinge straps.

(2) Place a wooden block on lifting plate of floor jack and position it under outer end of door.

(3) Loosen upper door hinge attaching bolts only.

(4) Observe scribe marks and raise or lower door to desired position (Raising outer end of door moves upper part of door forward when in closed position).

(5) Tighten attaching bolts.

(6) Loosen lower door hinge attaching bolts and raise or lower door to desired position (Lowering end of door moves lower part of door forward when in closed position).

(7) Tighten attaching bolts.

(8) Open and close door several times and inspect clearance around all door edges.

(9) Repeat steps 4, 5, 6, and 7 until door is centered in door opening.

(10) Adjust door lock striker.

### In and Out

(1) With door in a full open position, place a wooden block on lifting plate of a floor jack and position it under outer edge of door.

(2) Loosen upper hinge to pillar attaching bolts.

(3) Raise or lower jack until upper part of door has moved in or out desired amount (Raising the outer end of door will move upper part of door into door opening).

(4) Tighten upper hinge to pillar attaching bolts.

(5) Loosen lower hinge to pillar attaching bolts.

(6) Raise or lower jack until lower part of door is in desired position (Lowering jack moves door into door opening).

(7) Tighten attaching bolts.

(8) Close door and observe alignment of door panel with body sill, fender ,cowl and "B" post.

(9) Adjust door lock striker.

## REAR DOOR

### Up and Down

(1) With rear door fully closed and front door open, scribe location of both the upper and lower hinges on frame of door (Figs. 31, 32 and 33).

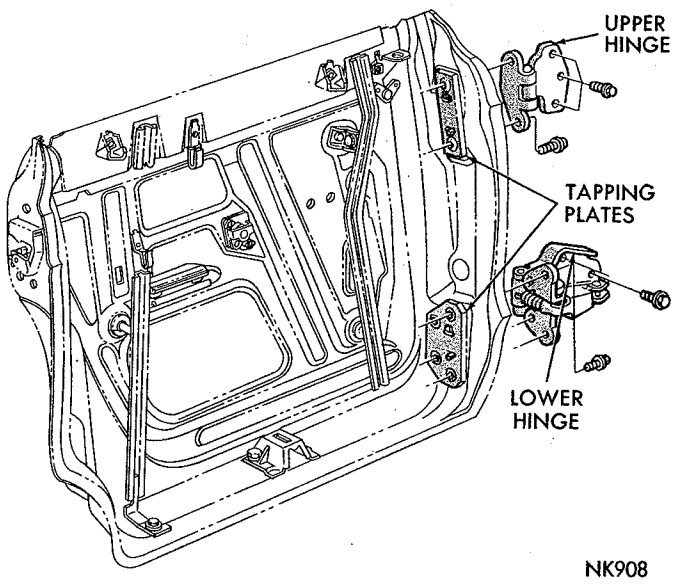


*Fig. 33—Rear Door Hinge Attachment—Fury*

(2) With door slightly ajar, position a floor jack under center of door.

(3) Loosen hinge to door attaching bolts.

(4) Observe scribe marks and raise or lower door to desired position.

(5) Tighten attaching bolts. Close door and check alignment in door opening.

(6) Adjust door lock striker.

### Fore and Aft

(1) Remove "B" post trim panel and scribe around pillar post hinge plate.

(2) Loosen both upper and lower pillar post hinge screws.

(3) With rear door slightly ajar, push door forward or back to desired position.

(4) Tighten pillar post hinge screws.

(5) Close door and inspect alignment in door opening.

(6) Adjust door lock striker and install "B" post trim panel.

### In and Out

(1) Scribe a mark on door around door hinge plate.

(2) Loosen upper hinge attaching bolts.

(3) Grasp front edge of door at the hinge and push door in or pull out to desired position.

(4) Tighten hinge attaching bolts. **Adjust one hinge at a time to prevent door from dropping in door opening.**

## STRIKER AND ROTOR

The door strikers (Fig. 34), are attached to the pillars through oversize holes permitting movement of the striker up and down and in and out. Fore and aft movement can be made by adding or subtracting shims between the striker and the post. The striker plate should be adjusted to lift the door slightly.

MyMopar.com

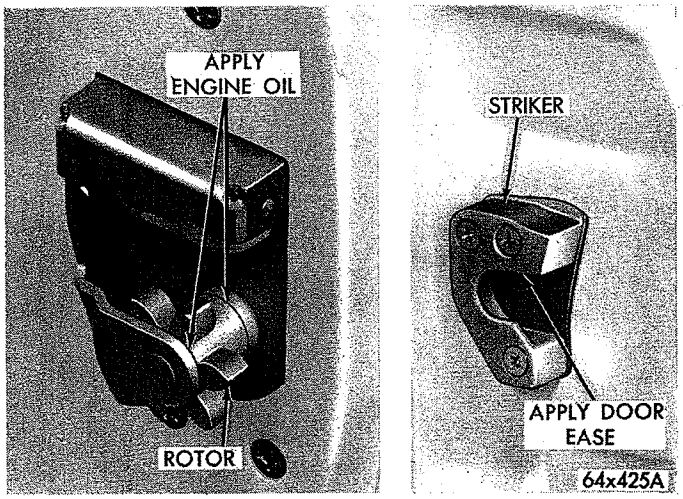


*Fig. 34—Striker and Rotor*

(1) Scribe position of striker on pillar.
(2) Loosen striker screws and reposition striker.
(3) Lubricate striker with stainless stick lubricant.
(4) Close and open door several times and test for ease of operation and door alignment.

## DOOR REPLACEMENT

### *Front Door (All Models)*

### *Removal*

**On vehicles with electric windows, disconnect the wires from window regulator motor and remove from door assembly.**

(1) With door in wide open position, place a jack, with a block of wood or pad on lifting plate of jack, as near hinge as possible. (This will hold weight of door as hinge bolts are loosened.)
(2) Remove door interior trim and hardware.
(3) Scribe a line around upper and lower hinge plates on door panel.
(4) Remove hinge attaching screws from door and remove door for further disassembly if necessary.

### *Installation*

(1) With door inner hardware installed, place door in position in door opening, supported by a padded jack.
(2) Locate door hinge plates on door panel and install hinge attaching screws finger tight only.
(3) Adjust jack to align hinge plate scribe marks and tighten attaching screws.
(4) Complete door aligning procedure, and install door interior trim and hardware.

**Prior to this installation, on electric window lifts, install wiring in doors and attach to motor and control switch.**

## REAR DOOR (All Models)

### *Removal*

**On vehicles with electric window lifts disconnect wires from motor and control switch and remove from door prior to door removal.**

(1) Open rear door and place a padded jack under door near the hinges.
(2) Remove door interior trim and hardware.
(3) Scribe aligning marks around hinge plates on door frame.
(4) Remove hinge attaching screws from door and remove door from body.

### *Installation*

(1) With rear door inner hardware installed, support door on a padded jack and position door on hinges.
(2) Install attaching bolts finger tight.
(3) Align hinges with scribe marks.
(4) Tighten attaching screws and test door for alignment.
(5) Install door interior trim and hardware.

**On vehicles with electric window lift, insert wiring into the door and attach wiring to motor and control switch prior to installation of trim panel.**

## HINGE REPLACEMENT

The door hinges (Figs. 31, 32, 33 and 34) are attached to the doors by screws accessible from outside. The front door hinges are each attached to the "A" post by three screws.

The rear door upper hinges (on hardtop and station wagon models), are attached to the "B" post by three screws accessible from outside. On sedan models, the screws are accessible through an access hole in the "B" post.

## INSIDE HANDLES

### *Window Regulator Handle*

The window regulator handles are retained on the shaft with an Allen set screw (Fig. 35).

### *Remote Control Handle*

The remote control handle on Fury—Belvedere—Satellite models (Fig. 36) is attached to the control unit with a screw at the rear inner end. The remote control handle on Valiant Models is attached with an Allen screw.

## ARM RESTS

The arm rests (Fig. 37) are retained by two metal

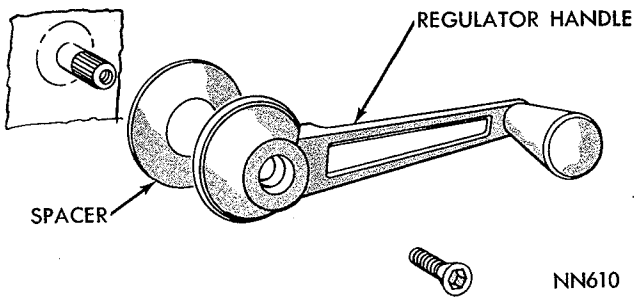


*Fig. 35—Regulator Handle Attachment*

MyMopar.com

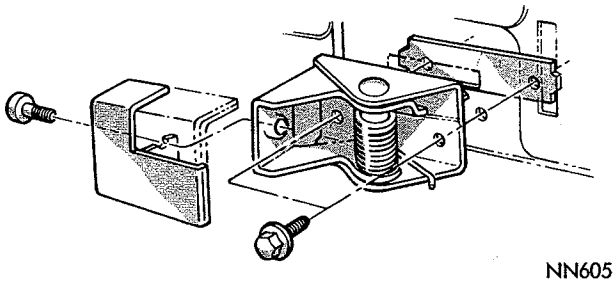


*Fig. 36—Remote Control Handle Attachment—Fury—Belvedere—Satellite*

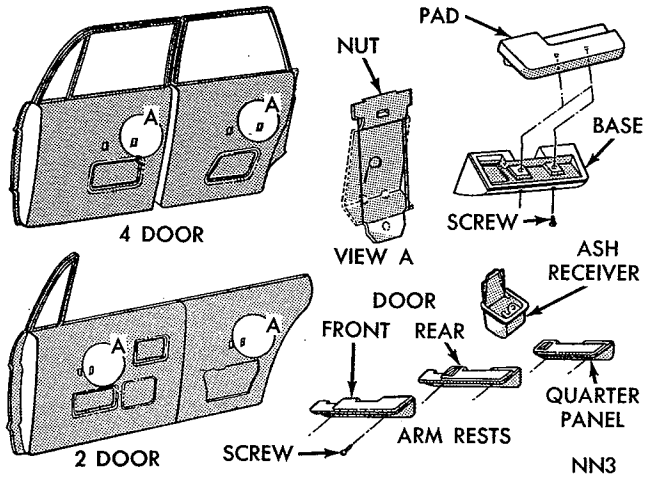


*Fig. 37—Arm Rest Applications*

screws inserted at the bottom of the arm rest base. The pad and base can be separated and if necessary, the pad may be recovered.

## TRIM PANELS

### *Door Trim Panel Replacement*

(1) Remove inside handles and arm rests.

(2) Remove screws attaching trim panel to door inner panel (Figs. 38 and 39).

(3) Insert a wide blade screw driver between trim

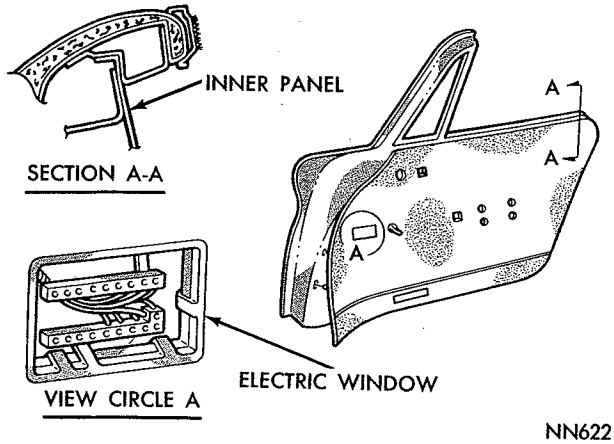


*Fig. 38—Front Door Trim Panel—Fury*

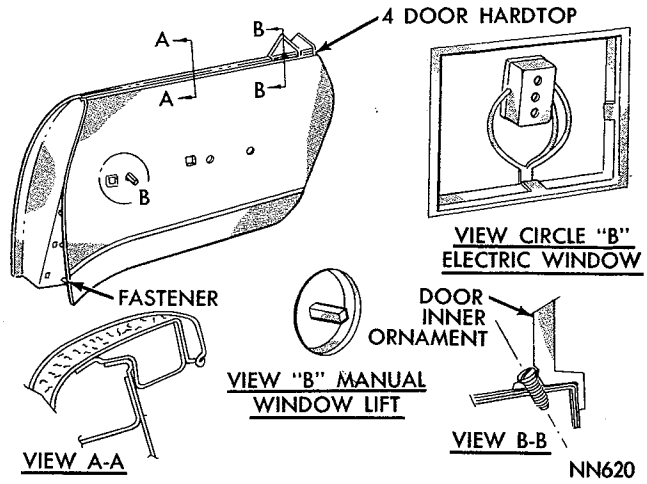


*Fig. 39—Rear Door Trim Panels—Fury*

panel and door frame next to retaining clips and snap retaining clips out of door panel. Remove trim panel.

(4) Before installing door trim panel, inspect condition of watershield (Fig. 40).

(5) Be certain the escutcheon spring is placed on the regulator shafts.

(6) Align trim panel retaining clips with holes of door frame and bump into place with heel of hand.

(7) Install trim panel to door screws.

(8) Install escutcheon washer, handles and arm rest.

### *Watershield*

Refer to Figure 40 for the sealing area and applications of the watershields. The lower edge of the shield must be inserted into the slots in the bottom of the inner panels.

## LOCK ASSEMBLY

### *Remote Control (Manual)*

### *Removal*

(1) Raise door glass.

(2) Remove screws attaching remote control base to door panel (Figs. 41, 42, 43, 44, 45 and 46).

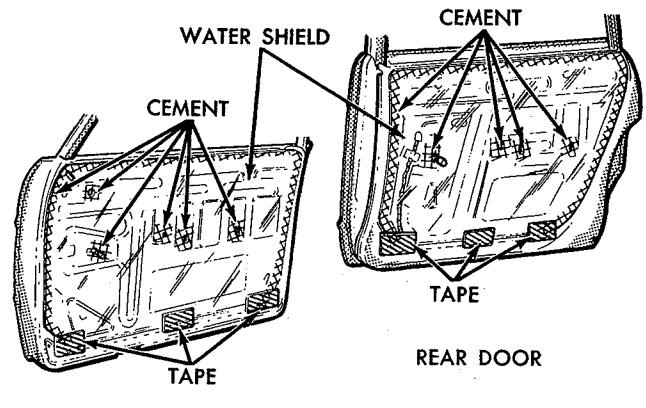


*Fig. 40—Door Watershields—Fury*

MyMopar.com

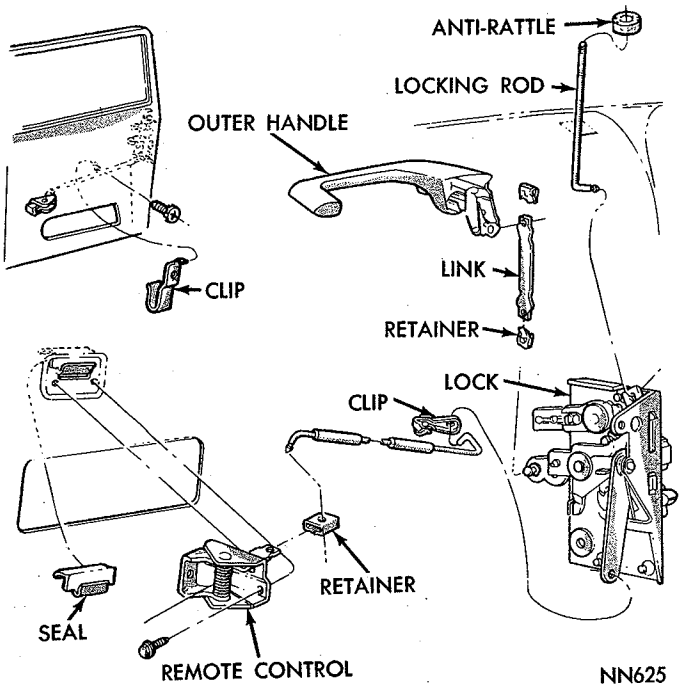


*Fig. 41—Front Door Locking Mechanism—Fury*

(3) Remove link from remote control lever.

(4) Remove control through large opening in door.

### Installation

(1) When installing the remote control assembly, coat parts with lubriplate.

(2) Install assembly through door opening and connect link to the control lever.

(3) Install attaching screw and test operation of control.

## LOCK REPLACEMENT

### Removal

(1) Disconnect handle to lock link (Figs. 41, 42, 43, 44, 45 and 46) from lock by pulling link outward at lock.

(2) Disconnect locking lever rod (front door only) from lock assembly.

(3) Disconnect lock control rod from lock assembly (Figs. 47 and 48).

(4) Remove screws attaching lock assembly to door.

(5) Rotate lock assembly and disconnect remote control link when removing lock.

(6) Lubricate all moving points of lock assembly.

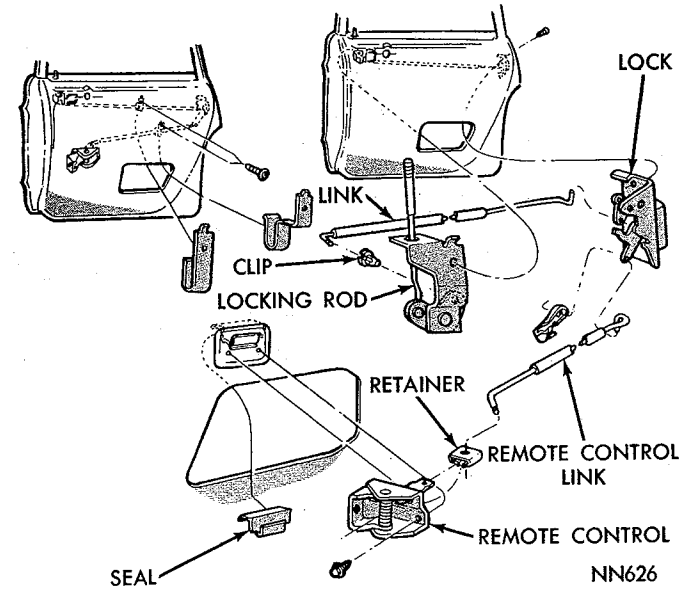


*Fig. 42—Rear Door Locking Mechanism—Fury*

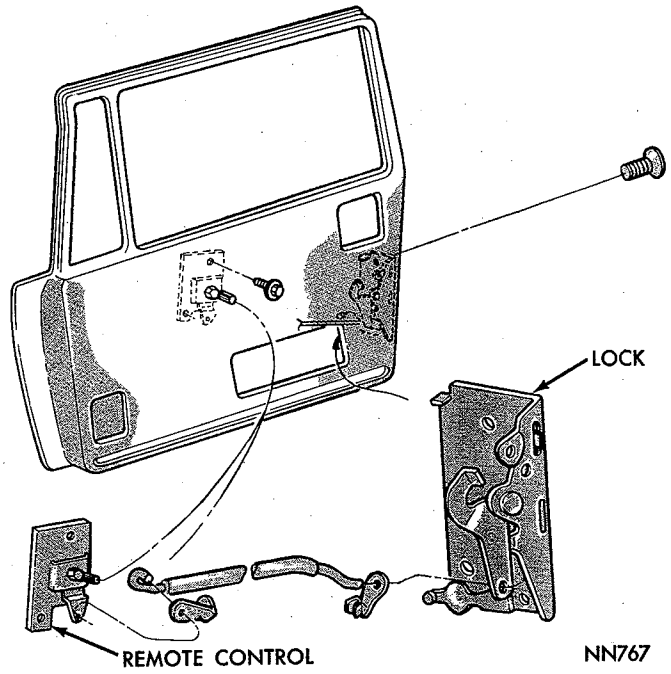


*Fig. 43—Front Door Remote Control and Lock—Valiant*

### Installation

(1) Position lock assembly in door and connect remote control link to lock lever.

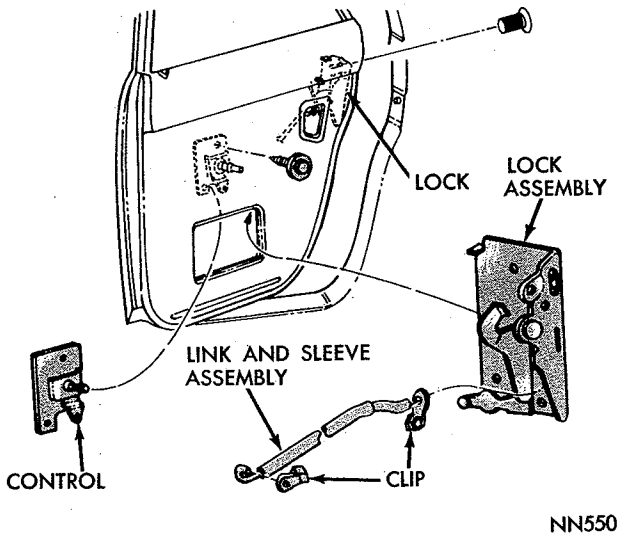


*Fig. 44—Rear Door Remote Control—Valiant*

MyMopar.com

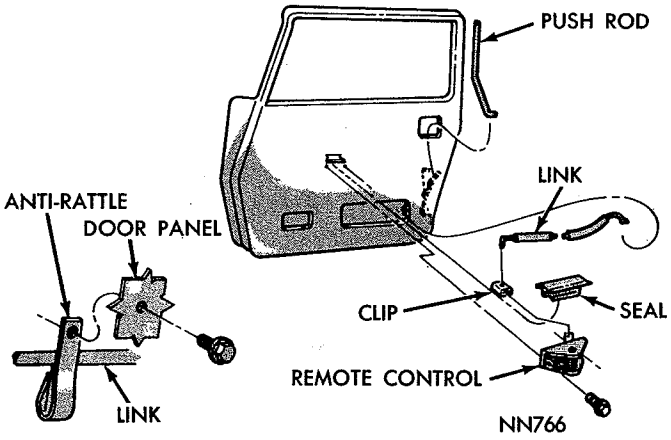


*Fig. 45—Front Door Remote Control—Belvedere—Satellite*

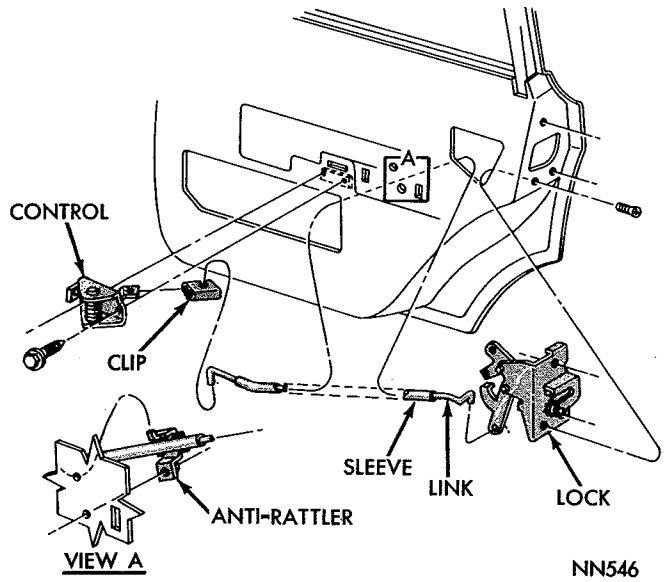


*Fig. 46—Rear Door Remote Control—Belvedere—Satellite*

(2) Install lock retaining screws.
(3) Connect handle to lock link.
(4) Connect locking lever rod (front door only) to lock assembly.
(5) Connect locking lever rod and remote control link to lock.

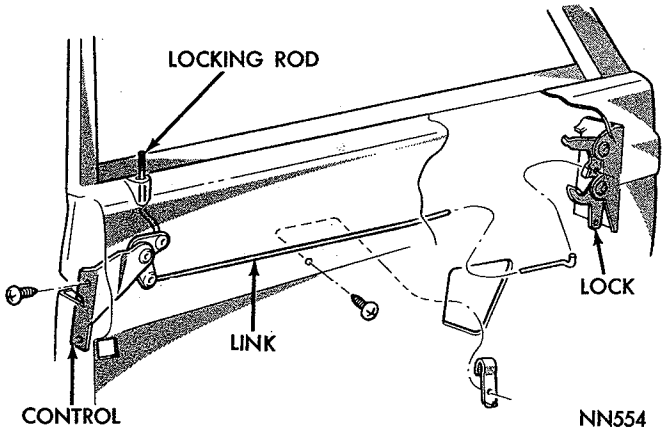


*Fig. 47—Rear Door Locking Control—Valiant*

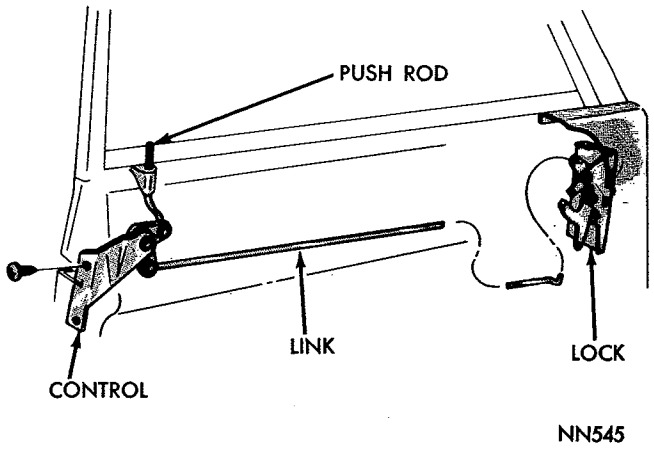


*Fig. 48—Rear Door Locking Control—Belvedere—Satellite*

## LOCK CYLINDER

### *Removal*

(1) With window in the up position, disconnect cylinder link (Figs. 49, 50 and 51) from clip on lock lever (4 door only) and from cylinder.
(2) On 2 door models disconnect lock link from clip on lock lever, remove link control bracket mounting screws and remove cylinder link from cylinder.
(3) Remove retainer from cylinder body and cylinder from door.

### *Installation*

(1) Position cylinder in door and install retainer on

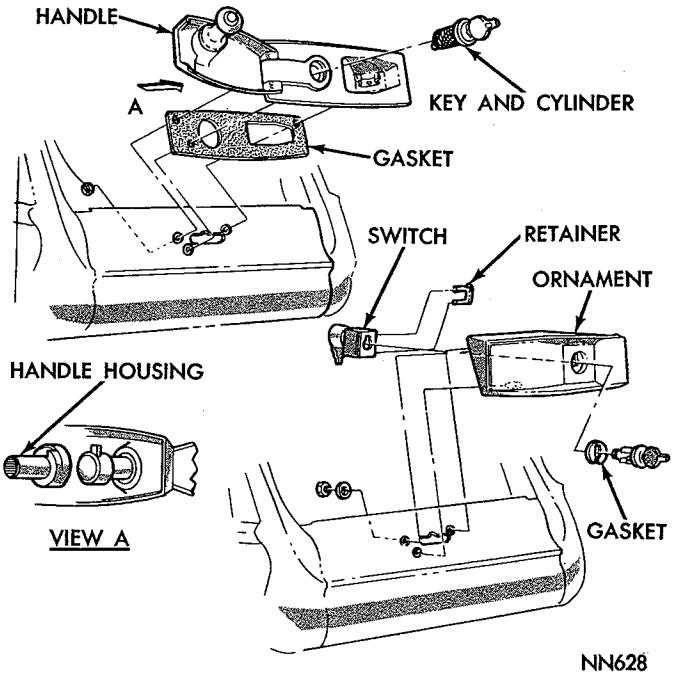


*Fig. 49—Door Lock Cylinder—Fury*

MyMopar.com

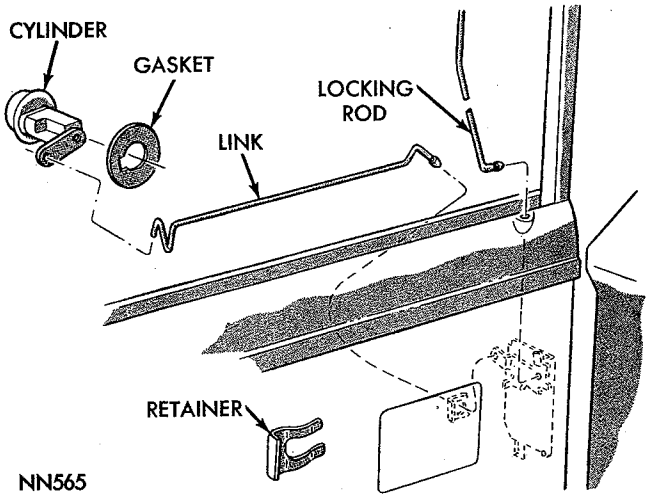


*Fig. 50—Door Lock Cylinder—Valiant*

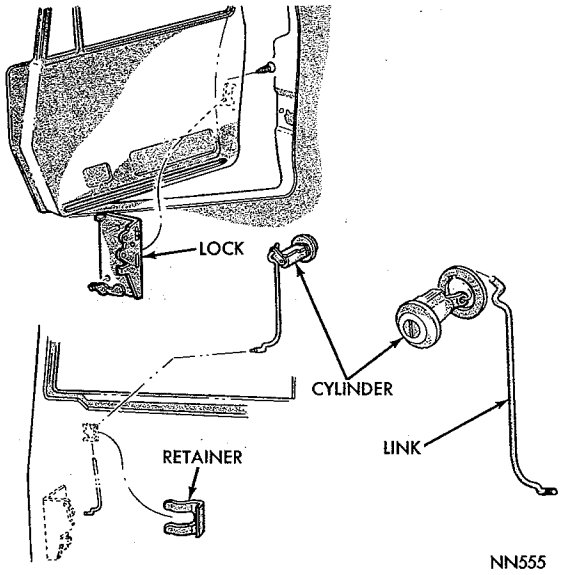


*Fig. 51—Door Lock Cylinder—Belvedere—Satellite*

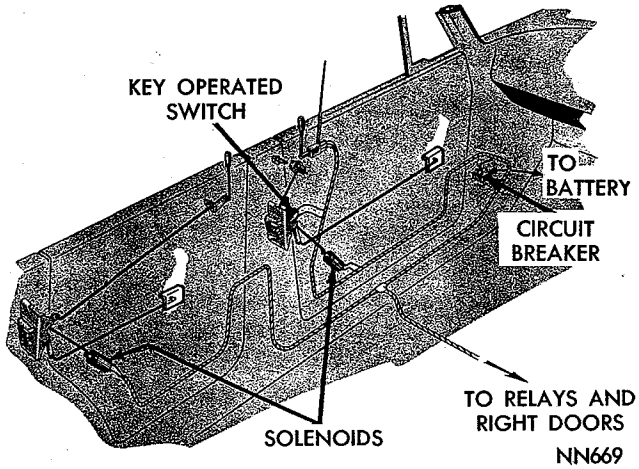


*Fig. 52—Electric Door Lock System*

cylinder body.

(2) Connect the cylinder link to cylinder arm and to clip on lock lever (4 door models).

(3) On 2 door models connect cylinder link to cylinder, position link bracket on door face and install attaching screws. Connect lock link to lock.

## ELECTRIC DOOR LOCKS (Fig. 52)

All doors may be locked or unlocked either mechanically or electrically. To lock mechanically, push the front door handle to the forward position and depress the rear door locking button. To lock electrically, depress the switch to the lock position.

### *Adjustment*

(1) Loosen solenoid to mounting bracket screws (Fig. 53).

(2) Push lock lever to down position and slide solenoid to full down position in mounting bracket.

(3) Raise lock lever to up position, extending solenoid rod to maximum up position.

(4) Tighten solenoid to mounting bracket screws and test operation of lock.

### *Testing*

**The battery must be fully charged before testing.** Make certain the solenoids are correctly adjusted before the circuits are tested. The circuit breaker is located behind the left side cowl trim panel and the relay is located behind the right side cowl trim panel.

Connect one lead of a voltmeter to the red feed wire terminal at the circuit breaker. Connect the other voltmeter lead to a good ground. The voltage should read 12.6 volts with no load and 11.4 volts when the locks are activated. Should no reading be obtained, inspect for a broken wire or a loose connection at the ammeter.

If battery voltage is correct at the circuit breaker, test voltage at the red feed wire terminal of the relay

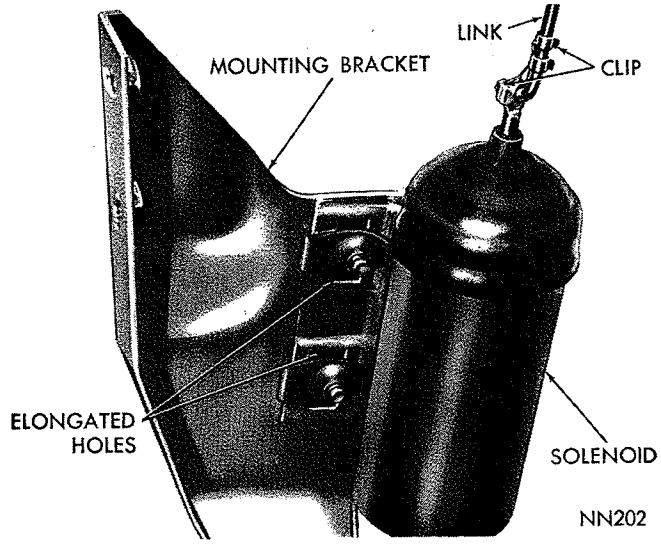


*Fig. 53—Solenoid Adjustment*

MyMopar.com

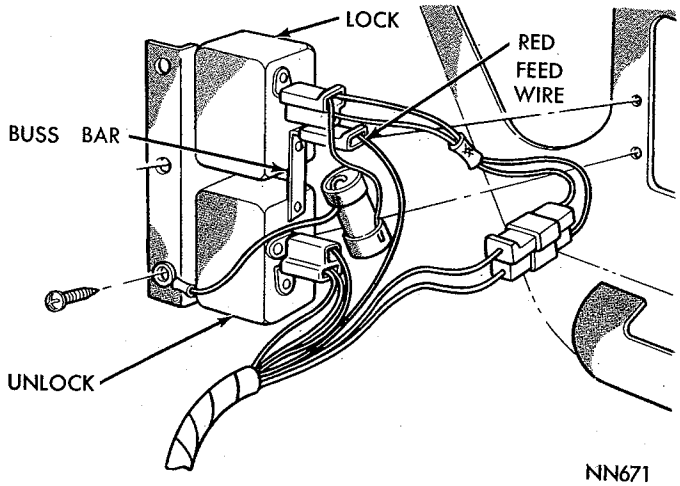


Fig. 54—Door Lock Relay

(Fig. 54). Connect one lead of voltmeter to buss bar connecting the two relays and the other voltmeter lead to a good ground. With no load, voltage should be 12.6 volts and when locks are activated, voltage should be 9.4 volts. A lower voltage reading indicates a shorted solenoid and a higher voltage reading indicates an "open" circuit.

To determine which solenoid is faulty, disconnect the solenoid connectors one at a time while trying the door lock switch. When the faulty solenoid is disconnected, the remaining door locks will operate.

## Solenoid Replacement

### Removal

(1) Disconnect solenoid link at solenoid (Figs. 55 and 56).

(2) Remove solenoid lead wires.

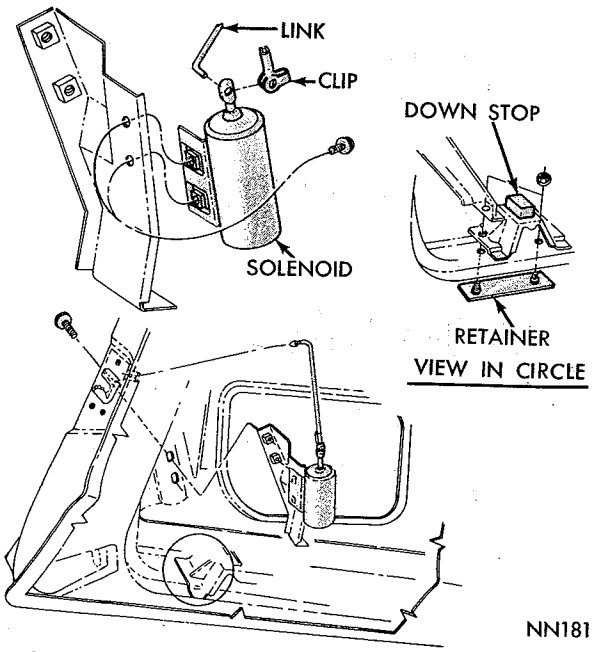


Fig. 55—Solenoid Attachment—Front Door

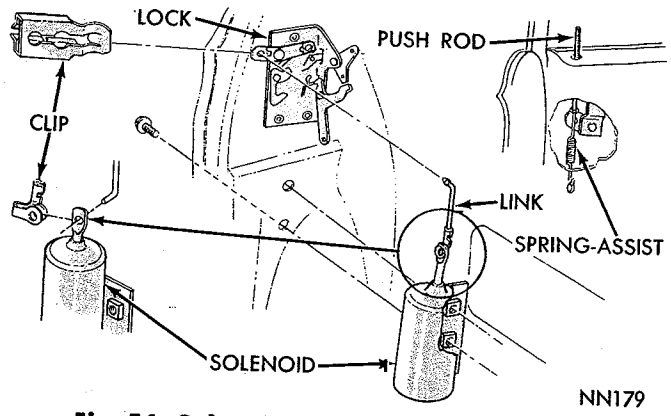


Fig. 56—Solenoid Attachment—Rear Door

(3) Remove solenoid to mounting bracket screws and remove solenoid assembly.

### Installation

(1) Position solenoid on the mounting bracket and install mounting screws finger tight only.

(2) Connect link to solenoid rod and connect wires.

(3) Adjust lock assembly.

### Lock and Switch Replacement (Fig. 57)

(1) Disconnect lock switch wires (front door only).

(2) Disconnect solenoid link at door lock lever.

(3) Remove screws attaching lock and switch assembly to inner face of door and remove from door.

(4) Remove key actuated switch from lock assembly.

### Installation

(1) Position key actuated switch on lock assembly and install mounting screw.

(2) Position lock and switch assembly on door inner face and install mounting screws.

(3) Connect solenoid link to door lock lever.

(4) Connect lock switch wires (front door only) and test operation of lock assembly.

### Remote Control Switch Replacement

The remote control switch (front doors only) (Fig.

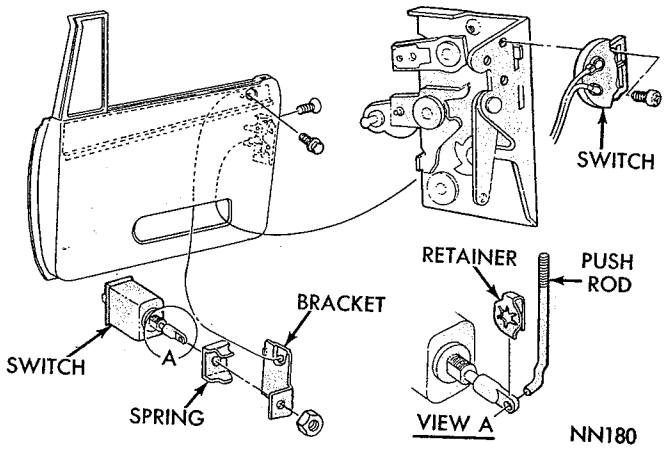


Fig. 57—Door Lock Switch

MyMopar.com

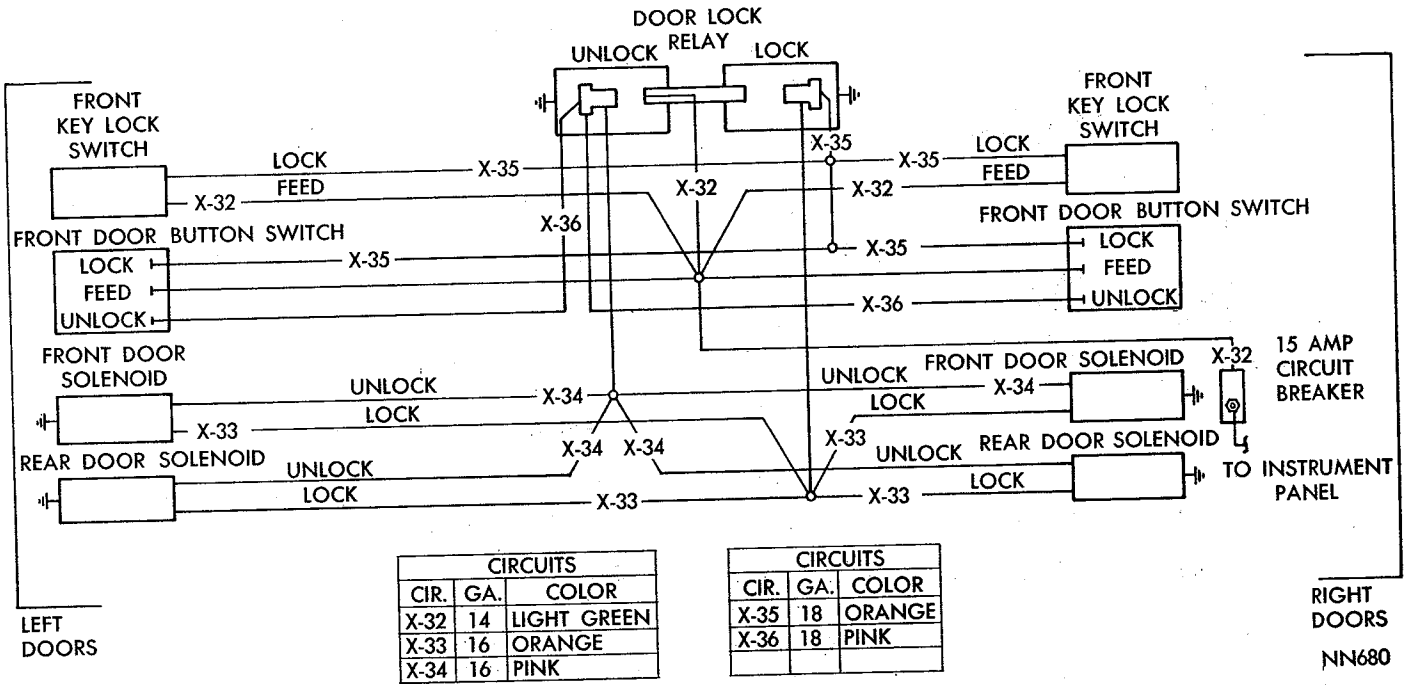


| CIRCUITS | | |
|---|---|---|
| CIR. | GA. | COLOR |
| X-32 | 14 | LIGHT GREEN |
| X-33 | 16 | ORANGE |
| X-34 | 16 | PINK |

| CIRCUITS | | |
|---|---|---|
| CIR. | GA. | COLOR |
| X-35 | 18 | ORANGE |
| X-36 | 18 | PINK |

*Fig. 58—Door Lock Wiring Diagram*

57) is attached to the door inner face with one screw. The remove control push rod is attached to the switch with a "push-on" type retainer.

### *Wiring Diagram*

Refer to Figure 58 for the door lock wiring diagram.

## OUTSIDE HANDLE—FRONT DOOR

### *Removal*

(1) With door glass in up position, remove door handle attaching nuts from mounting studs (Figs. 59, 60 and 61) and link from handle to lock.

(2) Lift handle up and remove from door.

### *Installation*

(1) Install handle into door opening. Engage link from handle to lock.

(2) Attach retaining nuts and test operation of the handle.

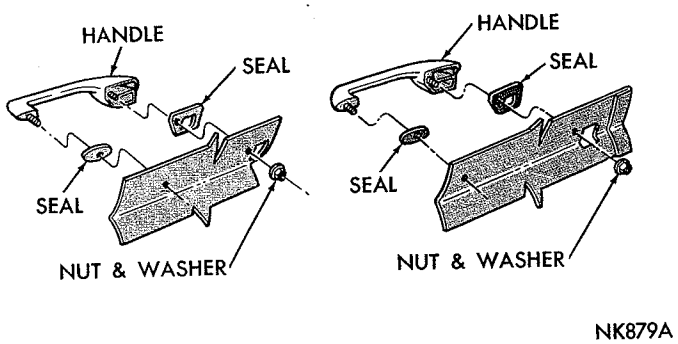


*Fig. 59—Front Door Handle—Fury*

## OUTSIDE HANDLE—REAR DOOR

### *Removal*

(1) With door open and glass in up position remov retainer from link at handle connector.

(2) Depress outside handle release button and re move link from handle connector.

(3) Remove nuts attaching handle to door and re move handle.

### *Installation*

(1) Position handle in door and install mountin nuts.

(2) Depress handle button and position link ove connector on handle.

(3) Install retainer over link and connector.

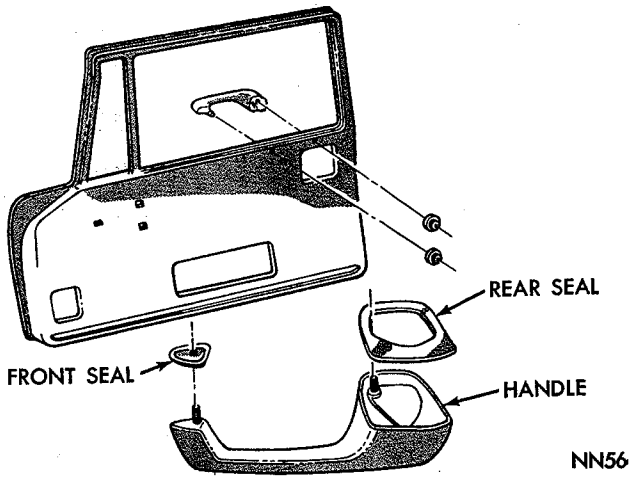


*Fig. 60—Front Door Handle—Valiant*

MyMopar.com

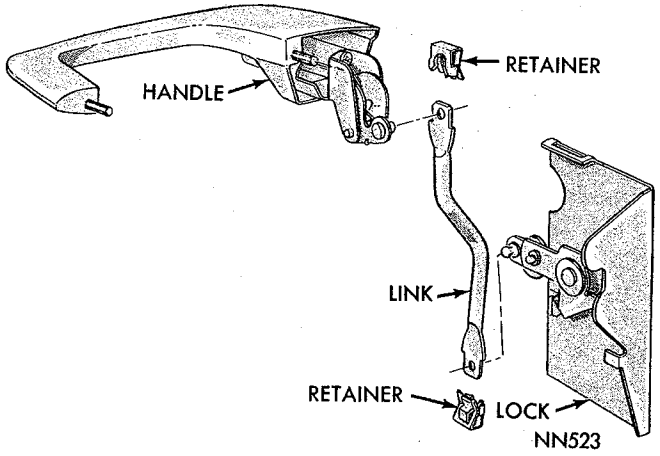


*Fig. 61—Front Door Handle—Belvedere—Satellite*

## WEATHERSTRIPS AND WINDCORDS

### *Door Weatherstrips*

Make sure all old weatherstrip particles and cement are removed.

### *Sedan and Station Wagon Models (Figs. 62 and 63).*

(1) Apply lower half of weatherstrip, starting at

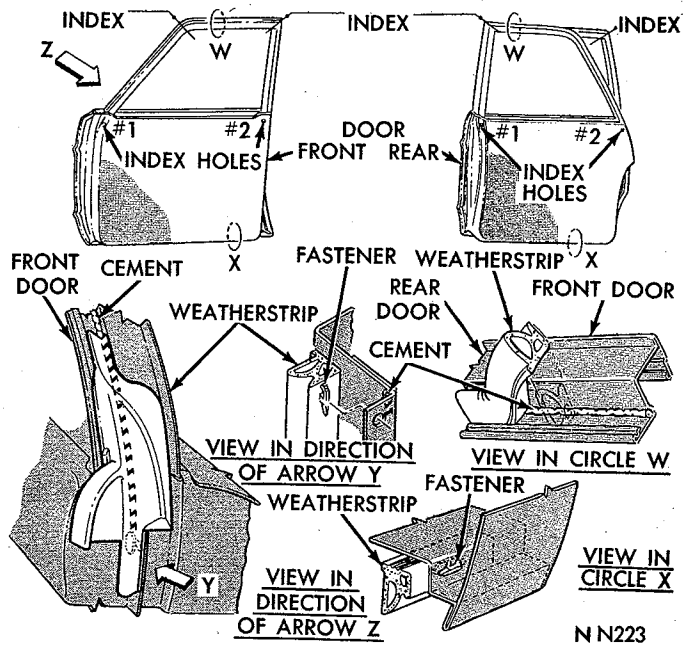


*Fig. 62—Door Weatherstrips—Sedan—Fury*

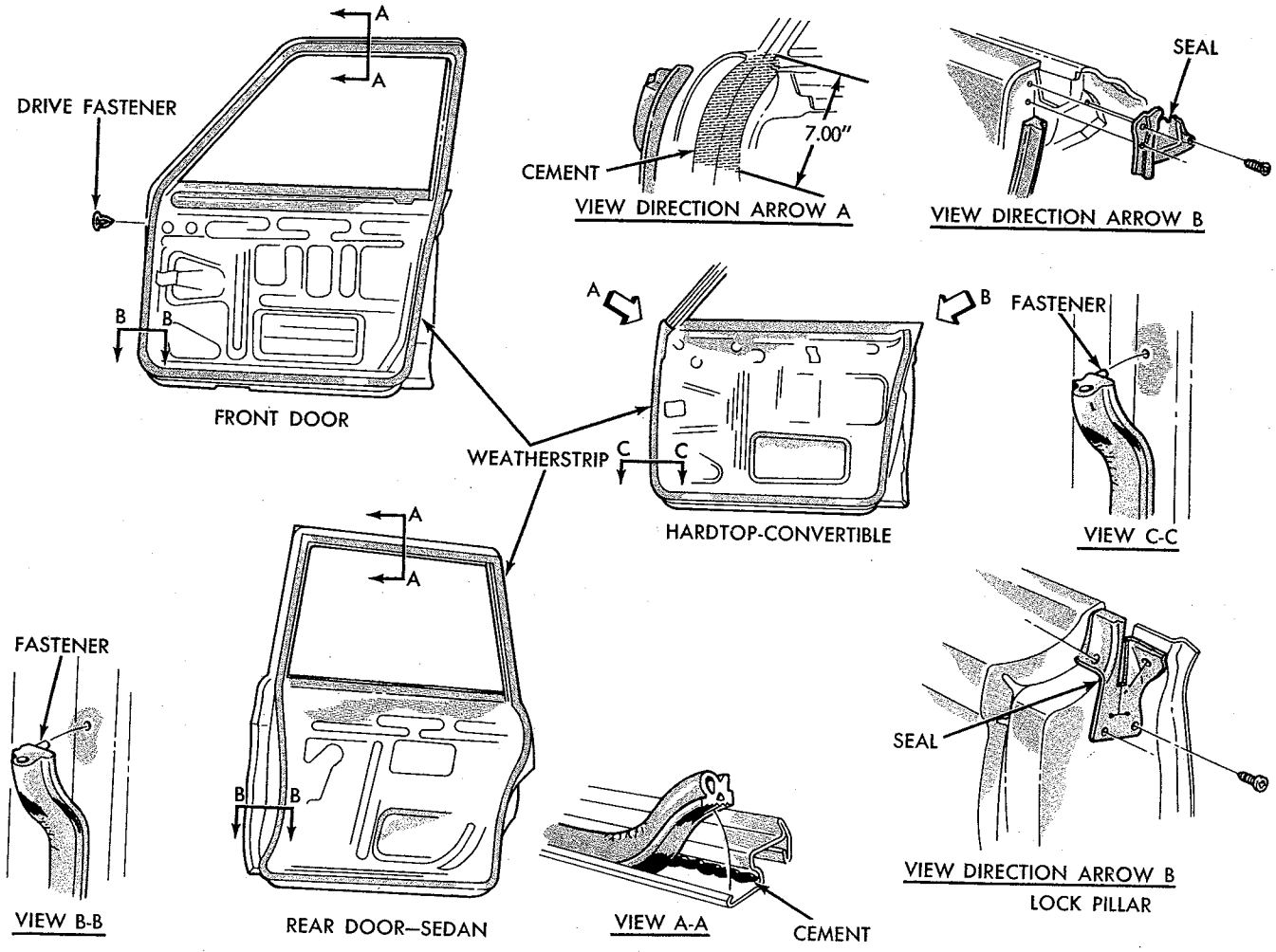


*Fig. 63—Door Weatherstrips—Belvedere—Satellite*

MyMopar.com

number one index hole and using fasteners for locating and ending at number 2 index hole.

(2) Apply a ⅛ inch bead of cement to weatherstrip seating area on door upper half.

(3) Install upper half of weatherstrip on door, indexing at the upper corners.

(4) Work weatherstrip from index points to a point midway between them. **Avoid puckering or stretching of weatherstrip.**

### *Hardtop—Convertible Models (Figs. 63 and 64).*

#### *Front Door*

(1) Apply a ⅛ inch bead of cement on weatherstrip as illustrated.

(2) Position the moulded end of weatherstrip and attach with fasteners.

(3) Index and install weatherstrip on door, using fasteners as a locating point and working from hinge pillar side of door completely around to lock pillar.

(4) Make sure lip of weatherstrip dovetails into groove of lock pillar seal and install seal on lock pillar.

#### *Hardtop Rear Door*

(1) Index and install weatherstrip on door by inserting fasteners in door and install from top of hinge pillar side of door completely around to lock pillar.

(2) Make sure lip of weatherstrip dovetails into groove of hinge pillar seal and install seal.

(3) Make sure lip of weatherstrip dovetails into groove of door upper ornament seal and install seal.

#### *Roof Rail Weatherstrip*

Refer to Figures 65 and 66 for the attaching points and methods of cementing.

The weatherstrip retainers are adjustable through the use of elongated attaching holes. The weatherstrip can be moved in or out for the best possible fit and seal along the top edge of the vent frame, door glass and quarter glass.

The glass up-stop must be adjusted so the fully raised glass just curls the outer lip of weatherstrip against the inner lip.

When the up-stop, roof rail weatherstrip and glass are properly adjusted, the outer lip of weatherstrip will seal along the top edge of the glass and the inner lip of weatherstrip will seal along the upper inside edge of glass.

#### *Outer Belt Weatherstrip*

The door outer belt weatherstrips are retained in the door panel with spring type retainers (Figs. 67 and 68).

#### *Windcords*

Refer to (Figures 69 and 70) for the starting point and method of attachment for the windcords.

## GLASS ADJUSTMENTS—SEDAN MODELS

### *Front Door Glass and Vent Wing (Fury Models)*

#### *Adjustments*

Refer to Figure 70 for adjustment points of the door glass and vent wing assembly.

(1) Open door and lower window approximately halfway.

(2) Adjust glass run retainer screw at bottom so glass moves in run freely.

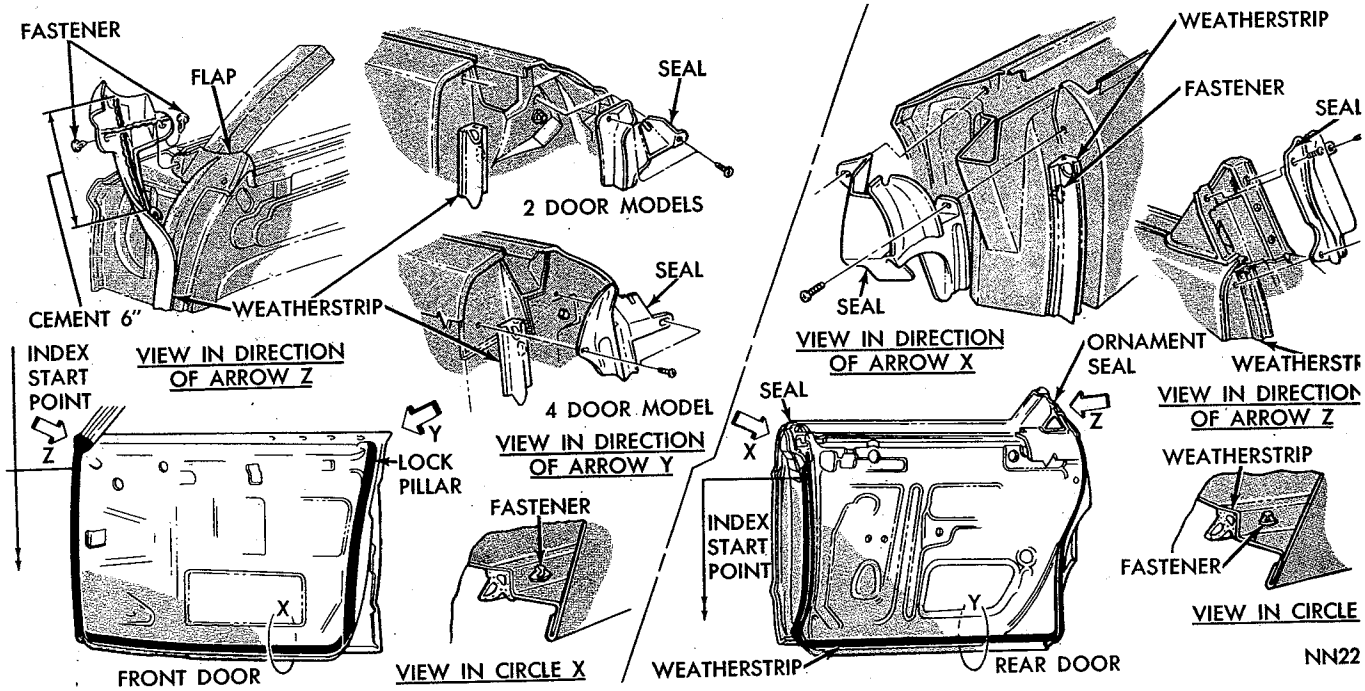


***Fig. 64—Door Weatherstrips—Hardtop—Convertible—Fury***

MyMopar.com

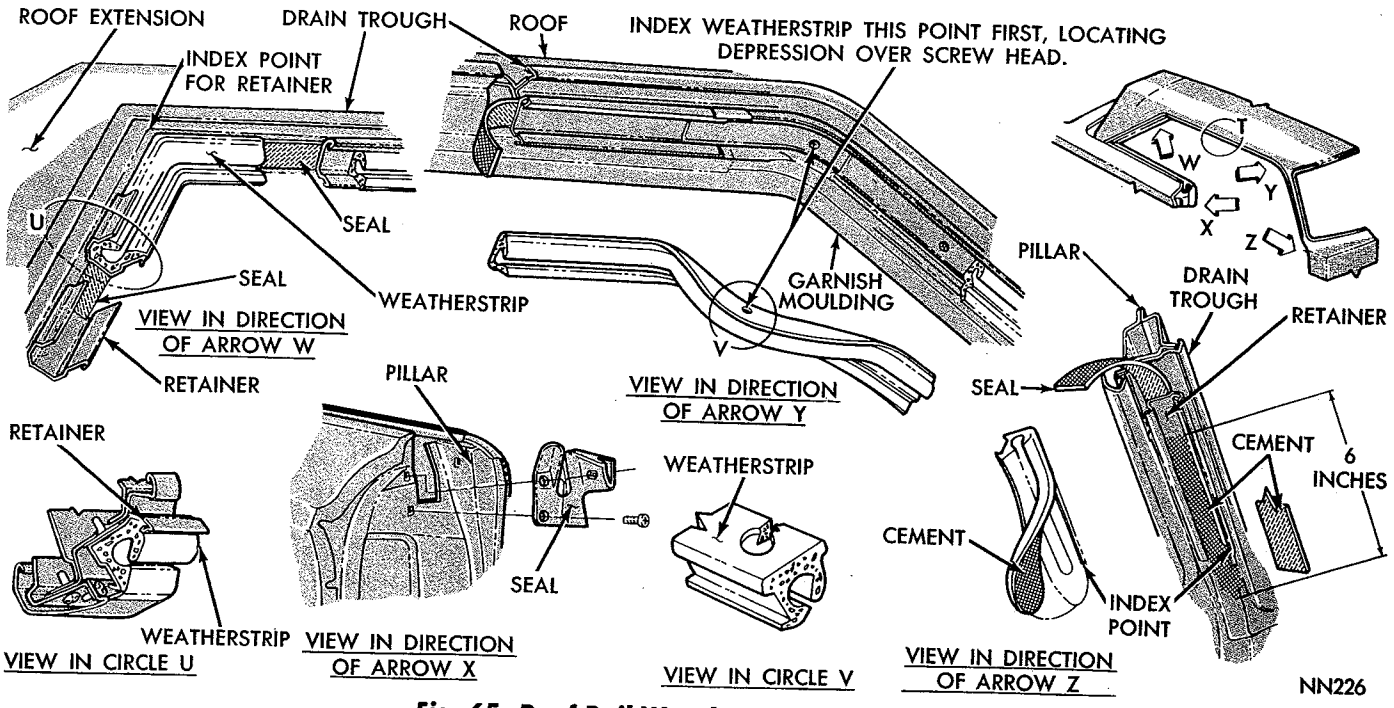


***Fig. 65—Roof Rail Weatherstrip—Fury 2 Door***

(3) Run window down so top of the glass is even or slightly below belt line of door outer panel.

(4) On manually operated windows, position stop on regulator plate against stop on regulator sector.

(5) On electrically operated windows, reach through major access hole and position down stop against bumper.

### *Vent Wing and Door Glass Replacement*

To remove vent wing glass or weatherstrip after vent wing assembly has been removed it is necessary for the swivel assembly to be removed from the regulator pivot (Fig. 71).

### *Removal*

(1) Lower door glass fully and remove approximately four (4) inches of glass run at forward end (Fig. 71).

(2) Remove screws attaching vent wing to end facing of door and to belt line.

(3) Move glass forward and disengage regulator arm from the lift bracket and guide assembly.

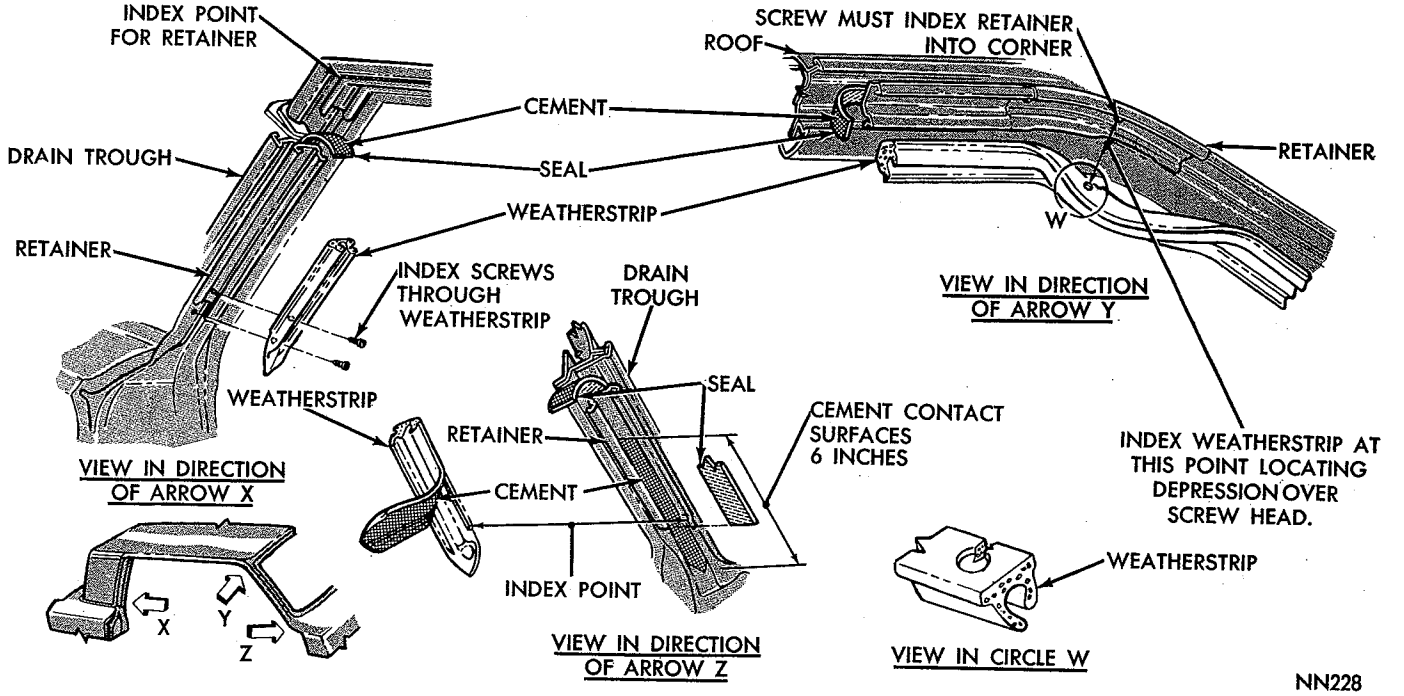


***Fig. 66—Roof Rail Weatherstrip—Fury 4 Door***

MyMopar.com

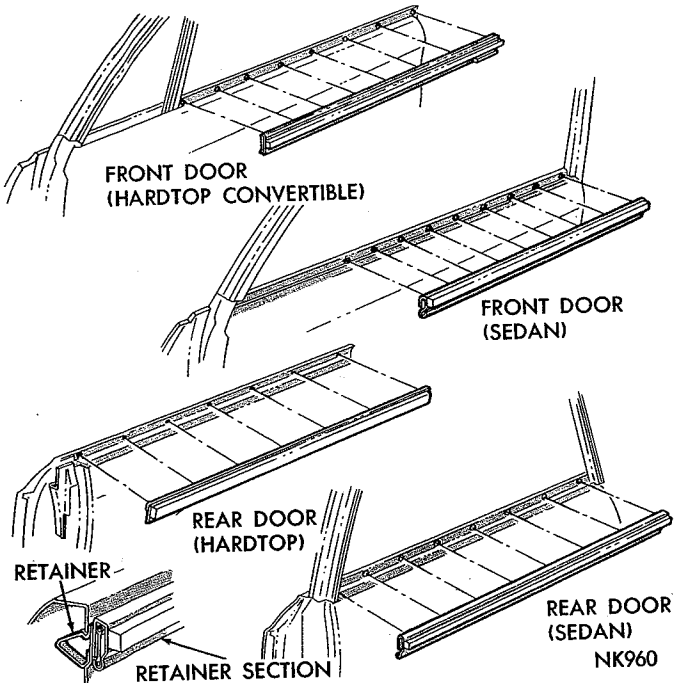


***Fig. 67—Outer Belt Weatherstrip—Fury***

(4) Remove screw attaching vent wing swivel to vent wing regulator (Fig. 71).

(5) Remove glass and vent wing assembly from door.

(6) Remove cotterpin from lower end of division channel (Fig. 72) and separate door glass and vent wing assembly.

(7) Remove plastic rivet attaching lift bracket and guide assembly to glass and remove assembly (Fig. 72).

(8) Remove the glass slide and weatherstrip (Fig. 73).

### *Installation*

(1) Install weatherstrip and slide on glass (Fig. 73).

(2) Position lift bracket and gasket on glass and install retaining rivet (Fig. 72) and assemble door glass in vent wing channel. Install cotter pin.

(3) Lubricate sliding surfaces of lift bracket.

(4) With regulator in fully down position, install vent wing and door glass assembly into door and position vent wing pivot swivel assembly into vent wing regulator.

(5) Position regulator arm roller into glass lift bracket and move glass rearward into glass run channel.

(6) Install vent wing attaching screws at face and belt line areas of door.

(7) Install vent wing pivot swivel to regulator screw.

(8) Install front end of glass run at forward end.

(9) Adjust door glass.

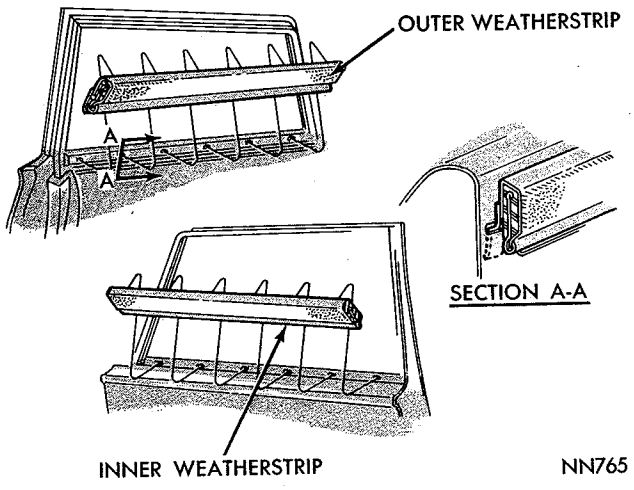


***Fig. 68—Outer Belt Weatherstrip—Belvedere—Satellite***

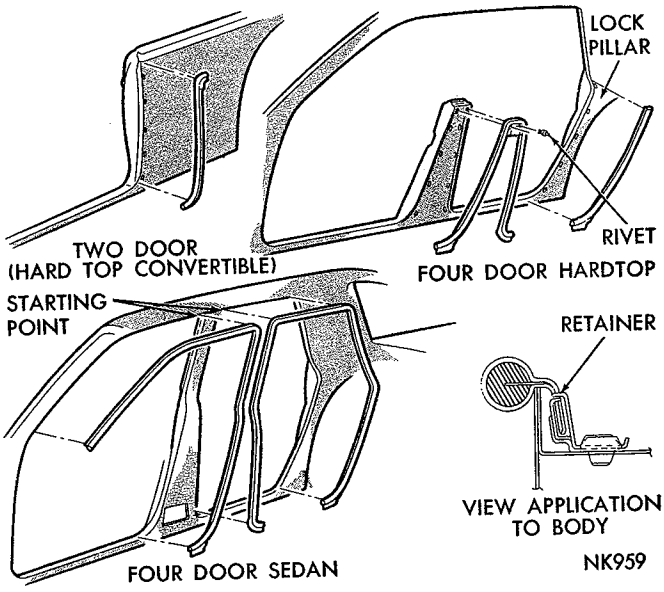


***Fig. 69—Door Windcords***

## REGULATOR REPLACEMENT

### *Door Glass—Manual and Electric*

The regulator assemblies are attached to the door

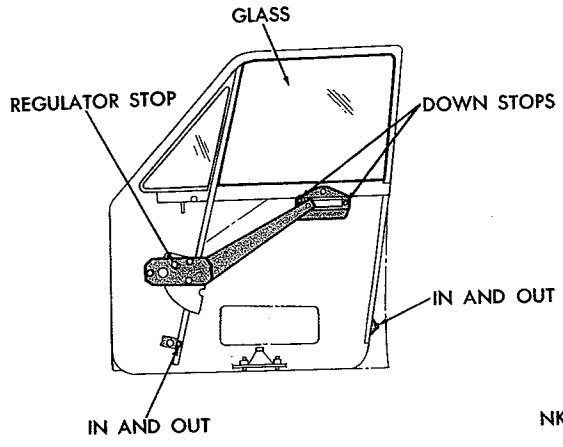


***Fig. 70—Front Door Glass Adjusting Points—Fury Sedan***

MyMopar.com

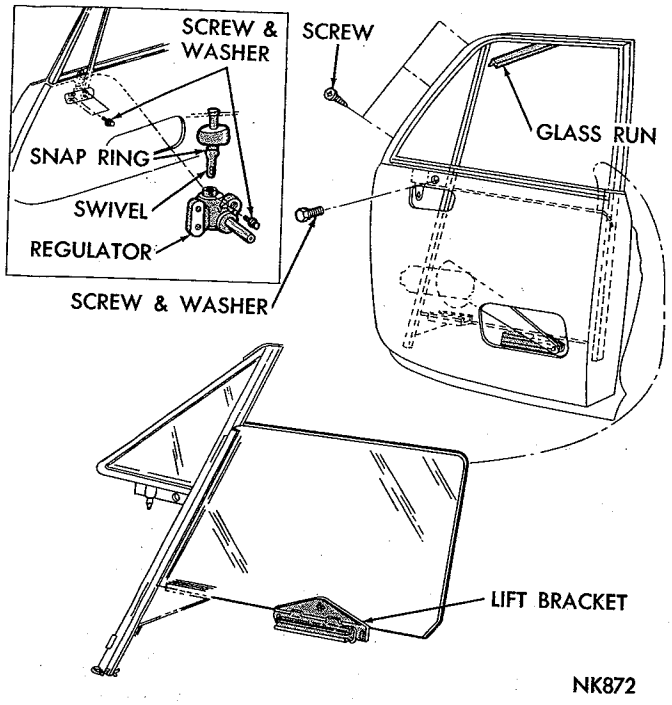


**Fig. 71—Vent Wing and Door Glass Attachment**

inner panels by screw and washer assembles (Fig. 74). When removing a regulator, the door glass should be fully lowered. Slide regulator rearward to disengage it from lift bracket and guide assembly. Lubricate the tooth area of regulator when installing.

### Electric Regulator-Motor Replacement

**Whenever it is necessary to remove the motor from the regulator, it is imperative the linkage be clamped in a vise (Fig. 75) to lock it in place. Failure to do this allows the assist spring to drive the mounting bracket around the lift pivot.**

### Tests

Electric window lift motors are of the permanent magnet type. Direction of rotation is determined by polarity of the leads to the motor. The door switches

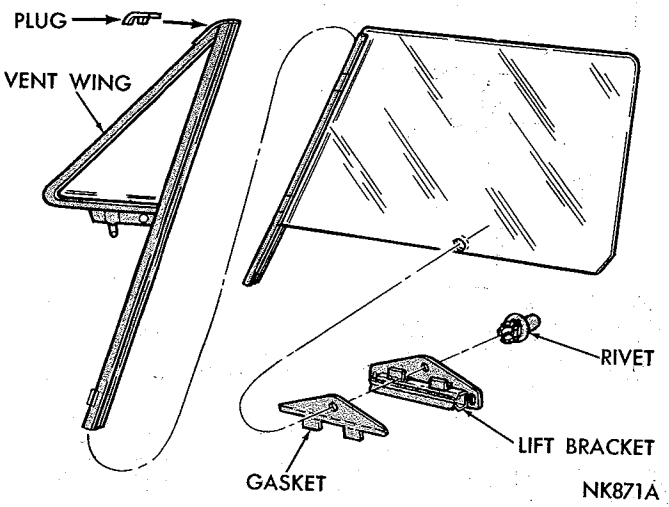


**Fig. 72—Glass Tilt Bracket**

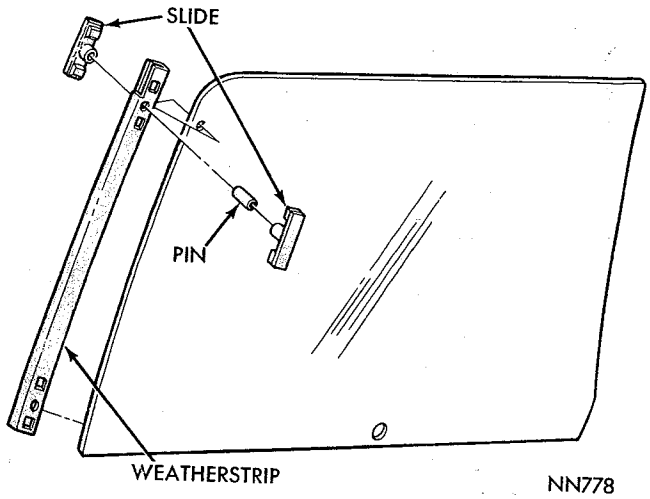


**Fig. 73—Glass Slide and Weatherstrip**

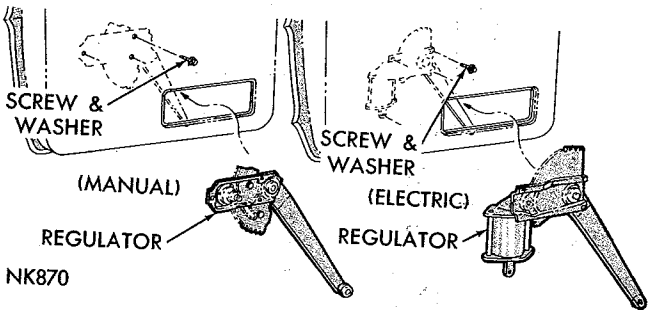


**Fig. 74—Front Door Regulator**

control the polarity and thus the direction of rotation. All motors are grounded through the master switch by a black wire attached to the left cowl panel (Fig. 76).

Before any tests are performed, the battery should be fully charged and the terminals clean and tight. The wire connections at the ammeter and accessory circuit breaker (mounted on the left cowl panel) should be tight. Continuity of the wiring and switches should be tested with an ohmmeter or test light.

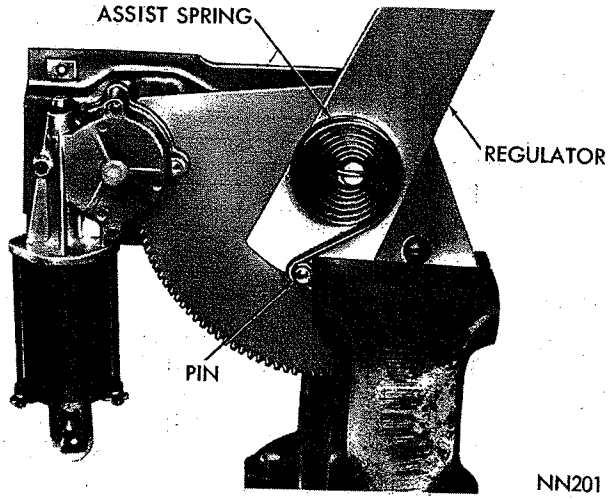


**Fig. 75—Locking Regulator Linkage in Position**

MyMopar.com

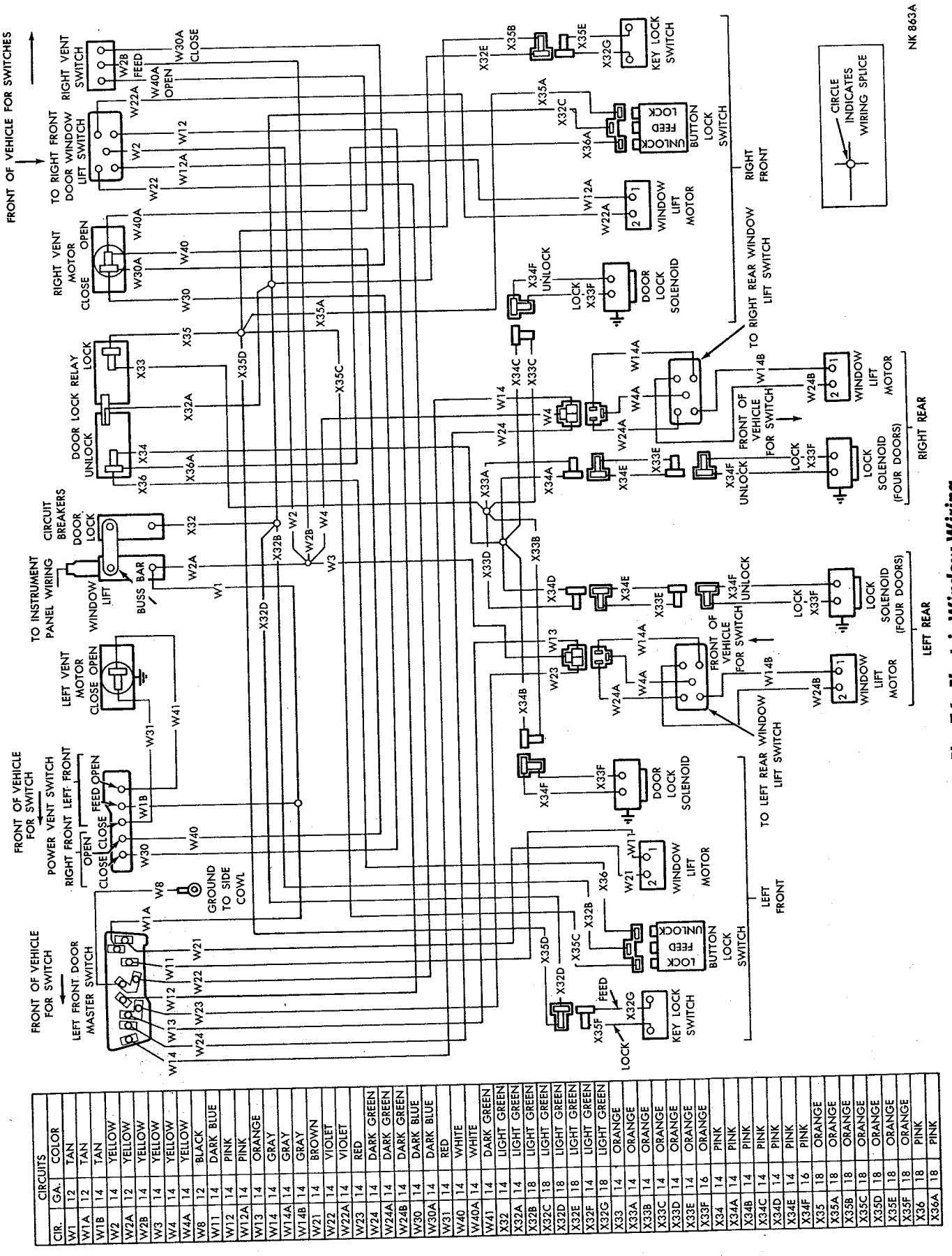


| CIRCUITS | | |
|---|---|---|
| CIR. | GA. | COLOR |
| W1 | 12 | TAN |
| W1A | 12 | TAN |
| W1B | 14 | TAN |
| W2 | 14 | YELLOW |
| W2A | 12 | YELLOW |
| W2B | 14 | YELLOW |
| W3 | 14 | YELLOW |
| W4 | 14 | YELLOW |
| W4A | 14 | YELLOW |
| W8 | 12 | BLACK |
| W11 | 14 | DARK BLUE |
| W12 | 14 | PINK |
| W12A | 14 | PINK |
| W13 | 14 | ORANGE |
| W14 | 14 | GRAY |
| W14A | 14 | GRAY |
| W14B | 14 | GRAY |
| W21 | 14 | BROWN |
| W22 | 14 | VIOLET |
| W22A | 14 | VIOLET |
| W23 | 14 | RED |
| W24 | 14 | DARK GREEN |
| W24A | 14 | DARK GREEN |
| W24B | 14 | DARK GREEN |
| W30 | 14 | DARK BLUE |
| W30A | 14 | DARK BLUE |
| W31 | 14 | RED |
| W40 | 14 | WHITE |
| W40A | 14 | WHITE |
| W41 | 14 | DARK GREEN |
| X32 | 14 | LIGHT GREEN |
| X32A | 14 | LIGHT GREEN |
| X32B | 18 | LIGHT GREEN |
| X32C | 18 | LIGHT GREEN |
| X32D | 18 | LIGHT GREEN |
| X32E | 18 | LIGHT GREEN |
| X32F | 14 | LIGHT GREEN |
| X32G | 18 | LIGHT GREEN |
| X33 | 14 | ORANGE |
| X33A | 14 | ORANGE |
| X33B | 14 | ORANGE |
| X33C | 14 | ORANGE |
| X33D | 14 | ORANGE |
| X33E | 14 | ORANGE |
| X33F | 16 | ORANGE |
| X34 | 14 | PINK |
| X34A | 14 | PINK |
| X34B | 14 | PINK |
| X34C | 14 | PINK |
| X34D | 14 | PINK |
| X34E | 14 | PINK |
| X34F | 16 | PINK |
| X35 | 18 | ORANGE |
| X35A | 18 | ORANGE |
| X35B | 18 | ORANGE |
| X35C | 18 | ORANGE |
| X35D | 18 | ORANGE |
| X35E | 18 | ORANGE |
| X35F | 18 | ORANGE |
| X36 | 18 | PINK |
| X36A | 18 | PINK |

**Fig. 76—Electric Window Wiring**

MyMopar.com

### Circuit Breaker

Connect one lead of a test light to the output terminal of the circuit breaker and the other lead to a good ground. The test bulb should light. If the bulb does not light and the wire continuity has been established, replace the circuit breaker.

### Switch

Slide a thin blade behind the switch housing (front and back), to depress retaining clips, and pull switch out from trim panel. Carefully separate the multiple terminal block from the switch body. Connect one lead of a test light to the black wire terminal and touch the other lead to the tan wire terminal. The test bulb should light. If the bulb fails to light, test the wires for an open circuit.

To test the continuity of "Up" or "Down" circuits, it is necessary to use two jumper wires. Connect one lead of a jumper wire to the tan lead and the other lead to the "Up" or "Down" terminal (opposite of position of the glass). Connect one lead of the second jumper to a good ground and connect the other end of the jumper to the opposite terminal (Fig. 77). The motor should run. If the motor fails to run, test continuity of the wiring. Should continuity be established and motor still does not run, replace the motor.

If the motor operates, install the switch body on the multiple connector and activate the switch. Should the motor still fail to run, replace the switch body. Test each switch in the same manner.

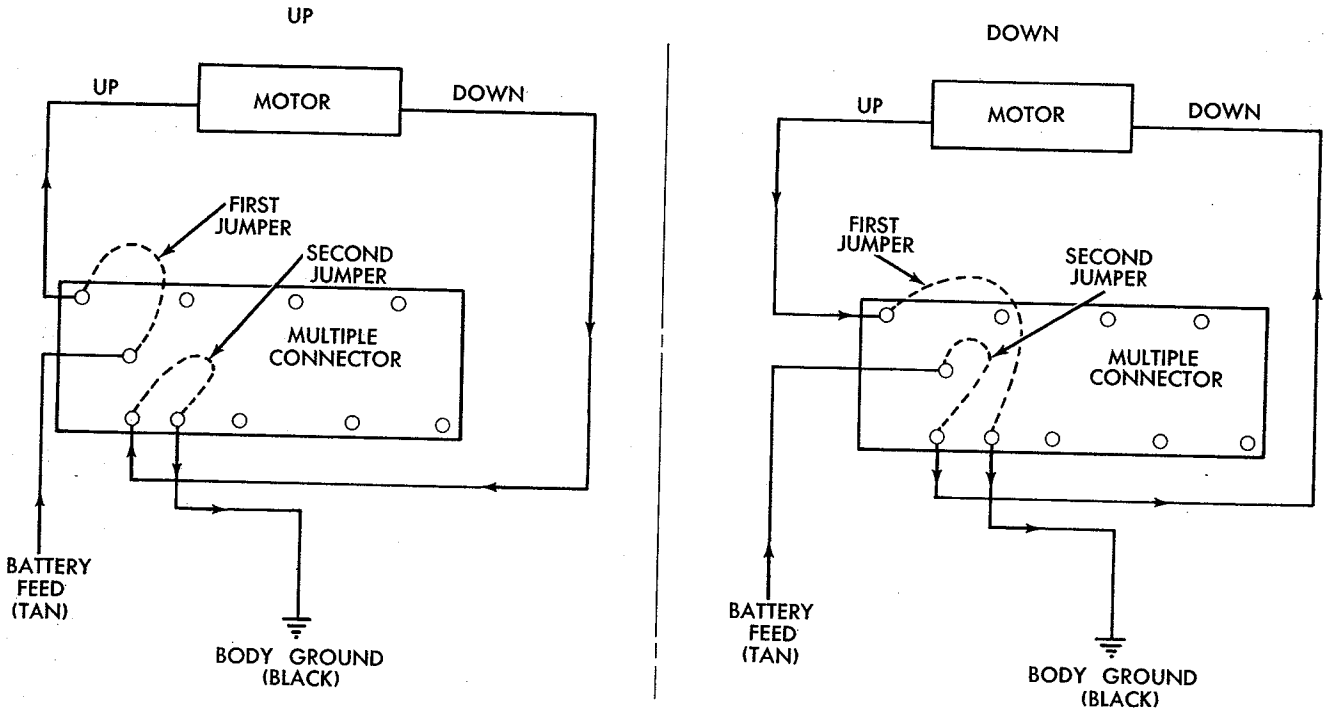


*Fig. 77—Testing the Switch*

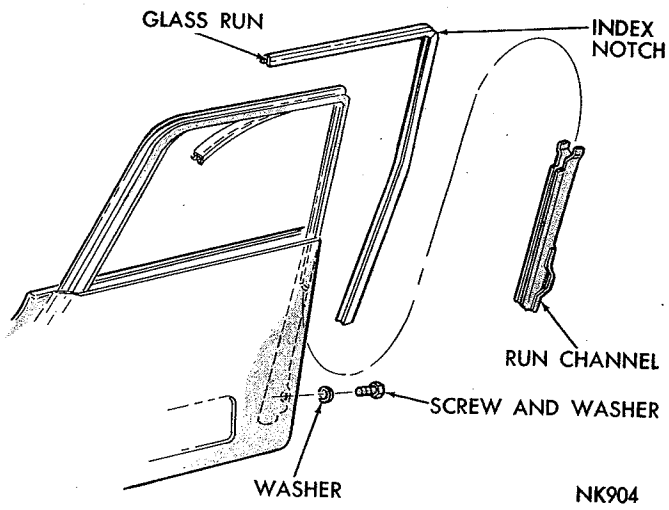


*Fig. 78—Glass Run and Channel*

### Motor Bench Test

Connect a jumper from the positive terminal of a test battery to one of the motor leads. Connect another jumper from the test battery negative terminal to the other motor lead. The motor should run. To reverse the direction of the motor rotation, switch the leads of the jumper wires at the test battery terminals.

### Glass Run and Channel

The glass run (Fig. 78) is a press fit in the door frame and lower run channel. The index notch at the door upper corner should be positioned first to assure correct installation of the run. The lower run channel (Fig. 78) is positioned over the window opening frame

MyMopar.com

from inside the door through the large access opening.

### Vent Wing Regulator

The vent wing regulator is attached to the door inner panel by three screw and washer assemblies and to the pivot swivel assembly by one screw (Fig. 71).

## BELVEDERE MODELS

### Adjustments—Sedan Models

### Door Glass and Vent Wing (Fig. 79)

(1) Open door and lower window so glass top is even or slightly below belt line.

(2) Move rear run retainer against rear edge of glass and tighten nut.

(3) Position regulator stop against regulator sector stop and tighten nut.

## VENT WING REPLACEMENT

### Removal

(1) Remove attaching screws from vent frame at door front facing.

(2) With door glass in the down position, remove division channel to support screw at lower end (Fig. 80).

(3) Move division channel off of glass edge.

(4) Disconnect the outer belt weatherstrip for a short distance to provide clearance for the vent wing division channel.

(5) Pull top of vent frame toward rear of door and pull assembly out of door.

### Installation

(1) Tilt top of vent wing toward rear of door and lower assembly into door.

(2) Move vent frame channel over glass and position channel on lower support.

(3) Install attaching screw. **Do not tighten.**

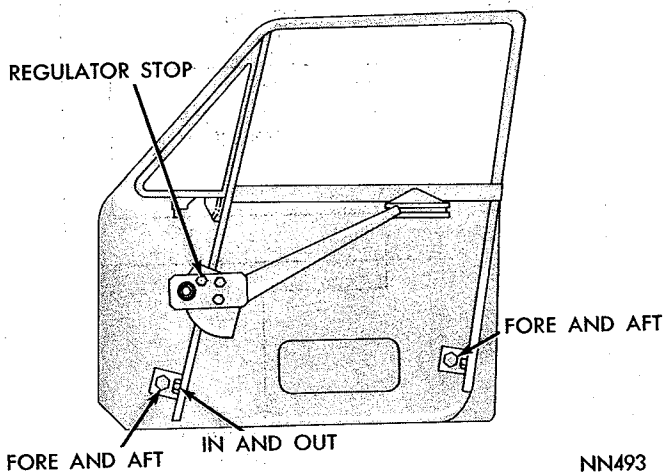


*Fig. 79—Front Door Glass Adjustments—Belvedere Sedan*

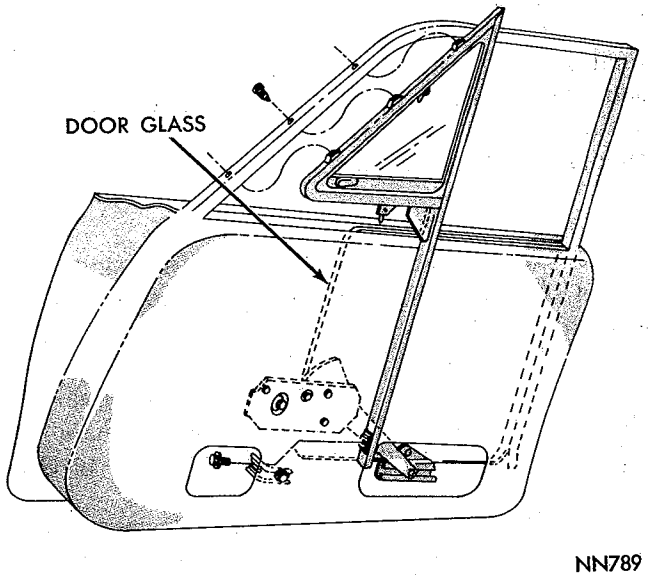


*Fig. 80—Vent Wing Assembly*

(4) Install screws attaching vent frame to door facing.

(5) Install loosened portion of outer belt weatherstrip.

(6) Adjust vent wing and door glass.

## DOOR GLASS REPLACEMENT

### Removal

(1) Loosen front run channel lower mounting screw (Figs. 79 and 80).

(2) Move run channel forward and slide glass out of channels.

(3) Remove regulator arm from lift bracket channel.

(4) Remove glass from door.

(5) Push plug out of lift bracket rivet (Fig. 81).

(6) Pinch expandable ends of rivet together and push rivet out of glass.

### Installation

(1) Position lift bracket and gasket on glass and install rivet and plug.

Before installing glass, lubricate regulator slide channel.

(2) Position glass into door.

(3) Position regulator arm roller into lift bracket.

(4) Position glass into glass run channels and adjust door glass.

### Regulator Replacement

The regulator assemblies are attached to the door inner panels by screw and washer assembles (Fig. 82) When removing a regulator, the door glass should be fully lowered. Slide the regulator rearward to disengage it from the lift bracket and guide assembly Lubricate the tooth area of the regulator when re installing.

MyMopar.com

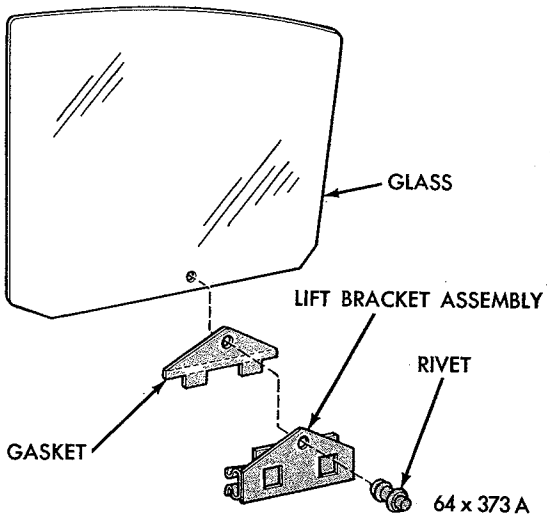


*Fig. 81—Glass Left Bracket*

### Electric Regulator Motor Replacement

**Whenever it is necessary to remove the motor from regulator, it is imperative the linkage be clamped in a vise (Fig. 75) to lock it in place. Failure to do this allows the assist spring to drive the mounting bracket around the lift pivot.**

### Tests

Electrical tests for the power operated windows are the same as for Fury Models, however Wiring Diagram (Fig. 83) must be used.

### Glass Run and Channel

The glass run (Fig. 84) is a press fit in the door frame and lower run channel. The index notch at the door upper corner should be positioned first to assure correct installation of the run. The lower run channel is positioned over the window opening frame from inside the door through the large access opening.

## VALIANT MODELS

### Adjustments—Vent Wing

Fore-or-aft adjustment (Fig. 85) of the upper end of vent wing assembly is accomplished by moving vent wing and division channel up or down. The vent wing assembly moves forward and downward to relieve a door glass that is tight. It moves rearward and upward to remove losseness.

Three vent wing attaching screws in front face of door and the adjusting screws at lower end of division channel must be loosened. With glass raised, move entire vent wing assembly up or down until glass is free in channels **but not loose.** Tighten attaching screws.

The lower vent wing pivot (Fig. 86) is provided with a bracket-type pivot tension adjustment. The star wheel adjusting screw ratchet is used to reduce or increase effort required to close and open the vent wing. Use a narrow blade screwdriver to reach through an opening provided in weatherseal, just ahead of the lower pivot, to turn adjusting screws.

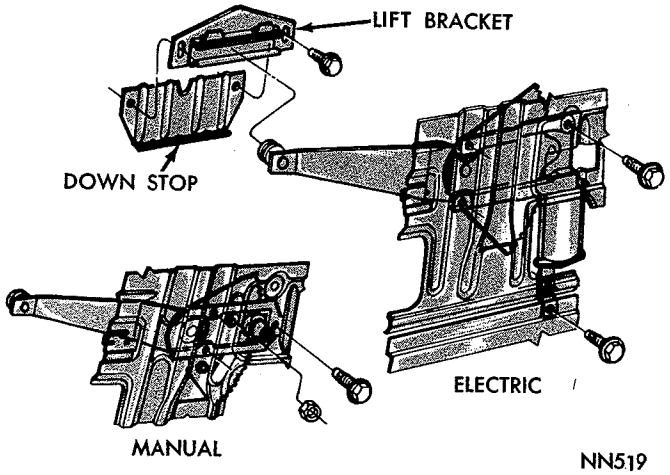


*Fig. 82—Regulator Assemblies*

### Door Glass

The front door glass adjustment (Fig. 85) is the same for 2-door and 4-door sedans. On 2-door sedans a low-friction liner (Fig. 87) is used inside of the rear glass run.

Lower the glass and move division channel rearward to remove excessive looseness of glass without creating a binding condition. Tighten both adjusting screws at lower end of channel.

In some cases it may be necessary to readjust the lower end of channel, to gain alignment of the channel and rear glass run.

If necessary, adjust the lower end of rear run channel in or out. Adjust down-stop so top edge of glass is flush with top edge of glass opening in door.

## VENT WING REPLACEMENT

### Removal

(1) Remove lock nut and washer from lower vent frame stud (Fig. 88).

(2) Remove attaching screws from vent frame.

(3) With door glass in down position, disengage lower frame stud from door bracket, window regulator arms from window channel and slide window out of run channels.

(4) Disconnect the outer belt weatherstrip for a short distance to provide clearance for the vent wing division channel.

(5) Pull top of vent frame toward rear of door and slide assembly out of door.

### Installation

Before installing the vent glass assembly, lubricate and test the tension of the vent wing lower pivot.

(1) Place vent assembly into door.

(2) Move vent frame forward into position.

(3) Install attaching screws. **Do not tighten.**

(4) Reinstall door glass in run channel and install regulator arms and clips.

MyMopar.com

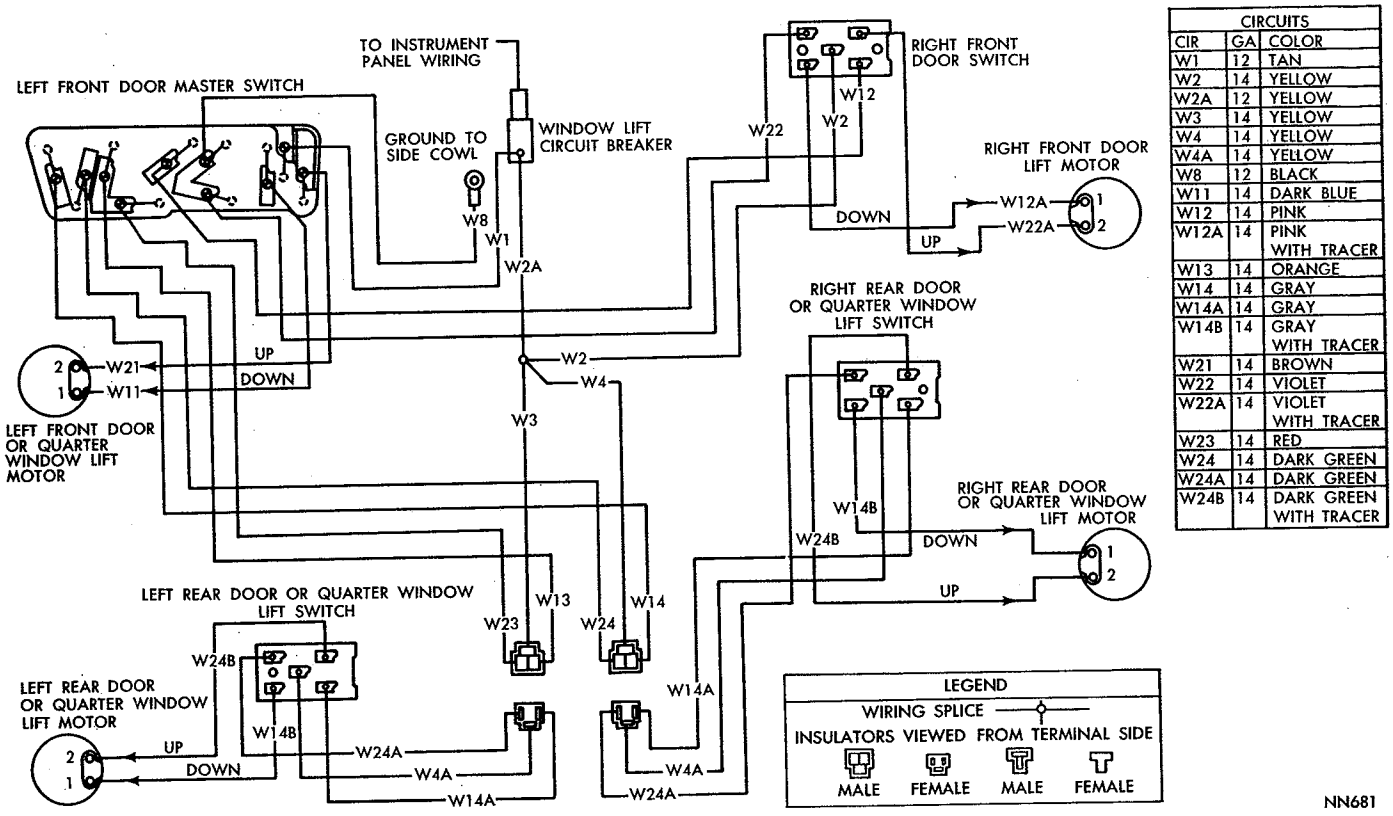


| CIRCUITS | | |
|---|---|---|
| CIR | GA | COLOR |
| W1 | 12 | TAN |
| W2 | 14 | YELLOW |
| W2A | 12 | YELLOW |
| W3 | 14 | YELLOW |
| W4 | 14 | YELLOW |
| W4A | 14 | YELLOW |
| W8 | 12 | BLACK |
| W11 | 14 | DARK BLUE |
| W12 | 14 | PINK |
| W12A | 14 | PINK WITH TRACER |
| W13 | 14 | ORANGE |
| W14 | 14 | GRAY |
| W14A | 14 | GRAY |
| W14B | 14 | GRAY WITH TRACER |
| W21 | 14 | BROWN |
| W22 | 14 | VIOLET |
| W22A | 14 | VIOLET WITH TRACER |
| W23 | 14 | RED |
| W24 | 14 | DARK GREEN |
| W24A | 14 | DARK GREEN |
| W24B | 14 | DARK GREEN WITH TRACER |

***Fig. 83—Electric Window Lift Wiring Diagram—Belvedere—Satellite***

(5) Position lower run channel adjusting stud into door bracket.

(6) Align window run channel.

### *Door Glass Replacement*

Service procedures for door glass replacement are the same as for Belvedere Models.

### *Regulator Replacement*

The regulator assemblies are attached to the door inner panels by screw and washer assemblies (Fig. 88). When removing a regulator, the door glass should be fully lowered. Slide the regulator rearward to disengage it from the lift bracket and guide assembly. Lubricate the tooth area of the regulator when reinstalling.

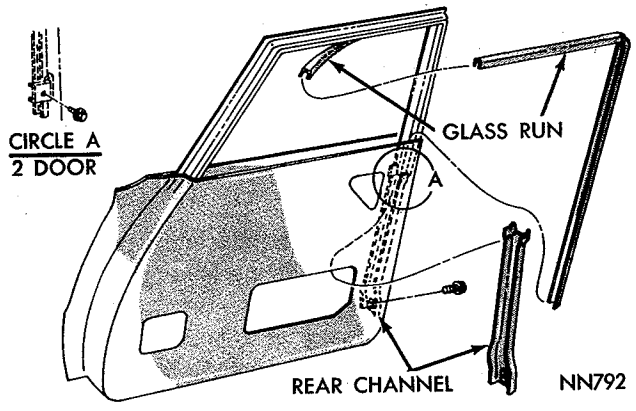


***Fig. 84—Glass Run and Channel***

## REAR DOORS—Fury Sedan Models

### *Adjustments*

(1) Run window up to approximately ⅛ inch below door frame.

(2) Adjust regulator pivot bracket (Fig. 89) so gap between top of glass and door frame is the same along the entire length. To raise front of glass, lower front of pivot bracket and to lower front of glass, raise front of pivot bracket.

(3) On manually operated regulators, run the window down so top of glass is even with or slightly be-

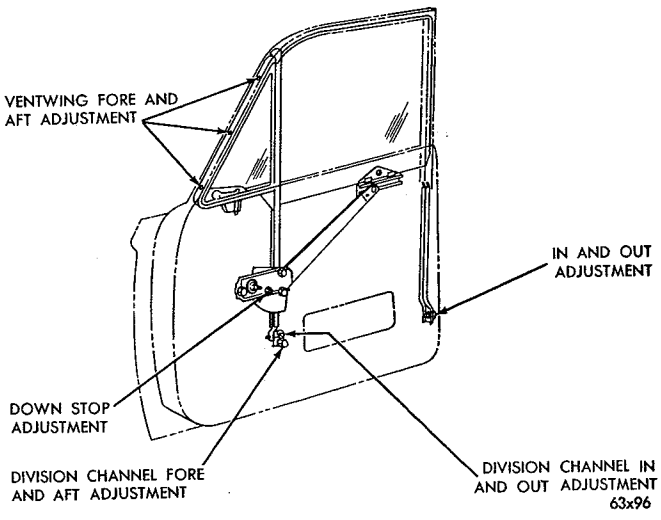


***Fig. 85—Front Door Glass Adjustments—Valiant***

MyMopar.com

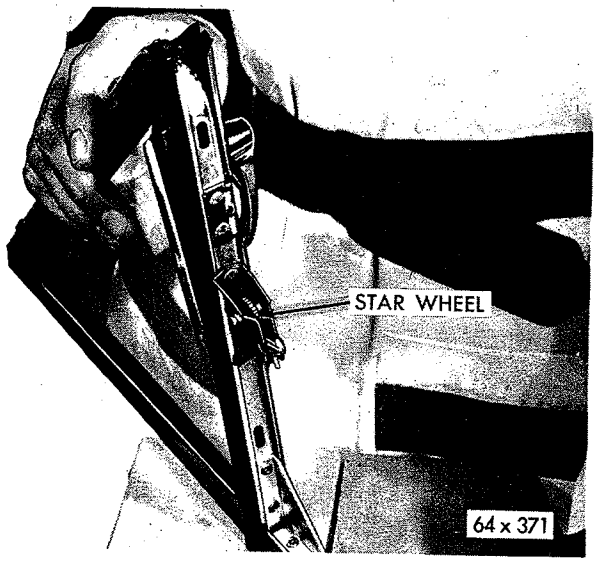


*Fig. 86—Vent Wing Pivot*

low belt line.

(4) Position stop on regulator plate against stop on the regulator sector and tighten the nut.

### Glass Replacement

(1) Remove door inside-handles, trim panel and watershield.

(2) Remove spring nut (Fig. 90) securing rear arm of regulator to glass lower frame.

(3) Remove regulator arm stud from roller in lower glass frame and remove roller.

(4) Rotate glass rearward (Fig. 90) and disengage slot of lower glass frame from roller on front regulator arm.

(5) Remove glass and frame assembly from door.

(6) Before installing glass and frame assembly, lubricate roller areas of frame. The rollers should be inspected for damage or excessive wear.

### Glass Lower Frame Attachment

The glass lower frame (Fig. 91) is attached to the glass with plastic rivets. Gaskets are used between the

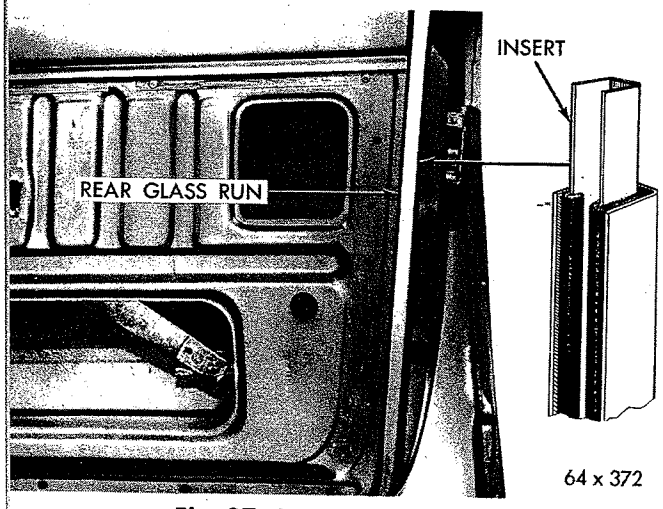


*Fig. 87—Low Friction Liner*

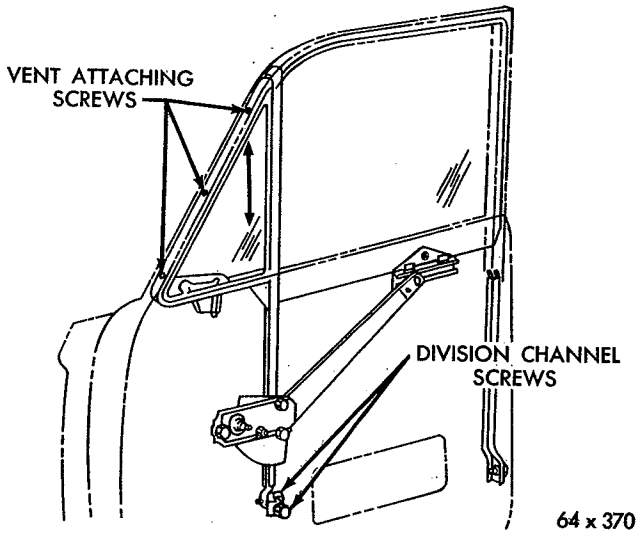


*Fig. 88—Vent Wing Attaching Points*

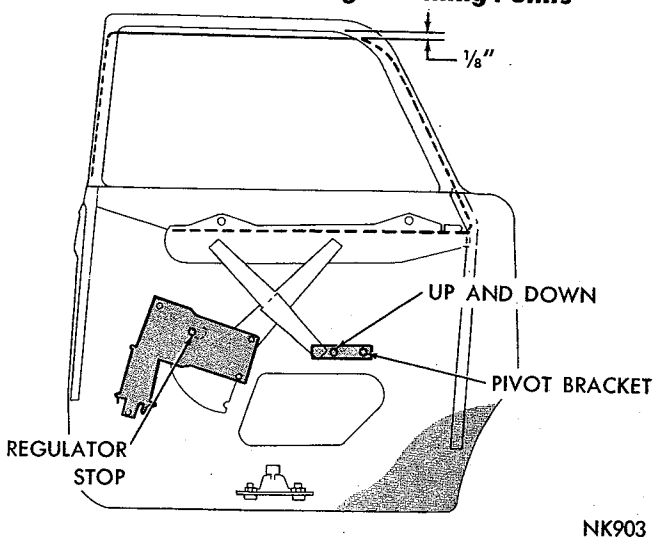


*Fig. 89—Rear Door Glass Adjustments—Fury Sedan*

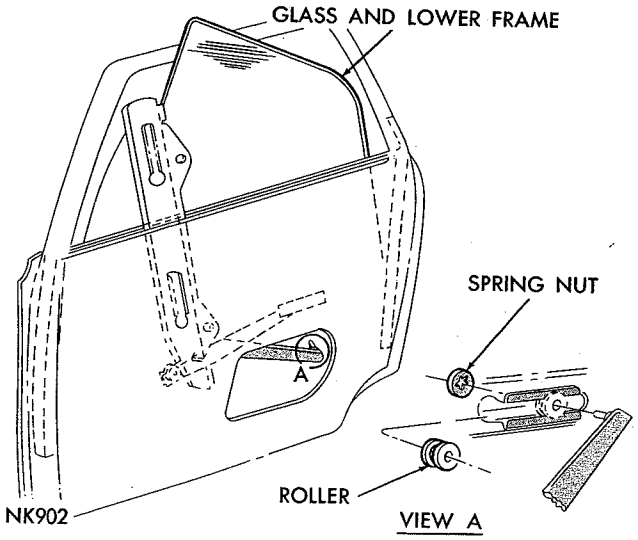


*Fig. 90—Rear Door Glass Replacement*

MyMopar.com

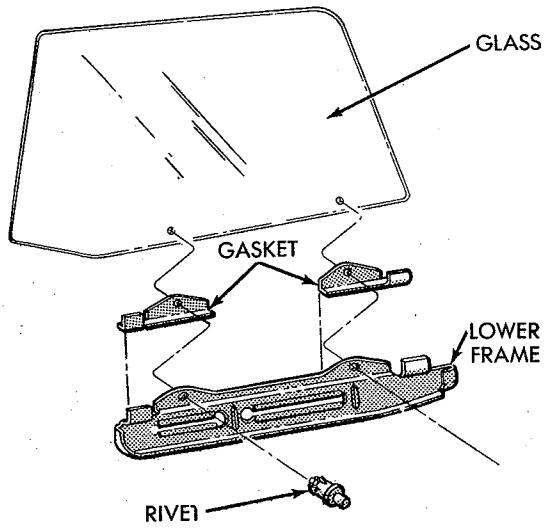


*Fig. 91—Rear Door Glass Attachment*

frame and glass. Lubricate roller areas of the frame before installing.

### Regulator Replacement—Manual and Electric

The regulator (Fig. 92) is attached to the door inner panel by screw and washer assemblies. Support the glass assembly when removing regulator. The roller on the regulator front arm is retained by a spring nut. Lubricate outboard side of regulator sector gear tooth contact area approximately ½ inch wide along entire length of arc and studs on front and rear arms before installing.

### Electric Regulator Motor

The service procedures and tests for the regulator motor are the same as for sedan models (Figs. 74, 75, 76 and 77).

### Rear Door Glass Run

The glass run (Fig. 93) is a press fit into the door

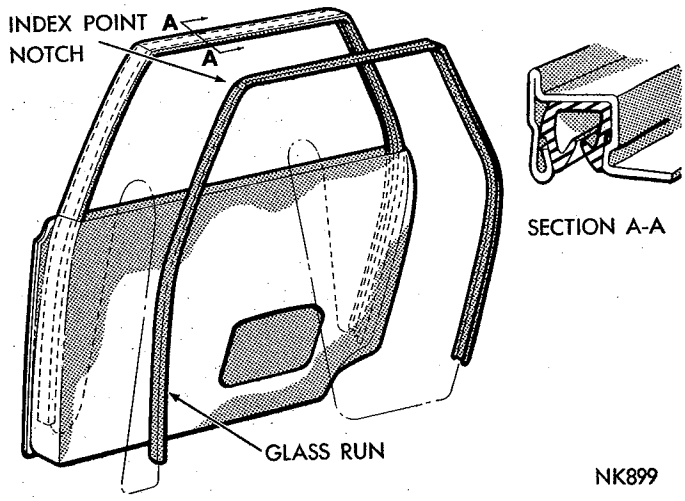


*Fig. 93—Rear Door Glass Run*

panel. When installing glass run, the index point notch should be installed first to assure correct alignment of run.

## BELVEDERE SEDAN MODELS

### Adjustments

(1) Loosen the division channel lower bracket screw (Fig. 94) and lower window half way.

(2) Tighten division channel lower bracket screw.

(3) Lower window so top of glass is even with or slightly below belt line of outer panel.

(4) Position regulator stop against regulator sector stop and tighten nut.

### Glass Replacement

(1) Loosen the division channel lower screw (Fig 95) and move glass out of run channel.

(2) Move the glass to the rear and remove the regu

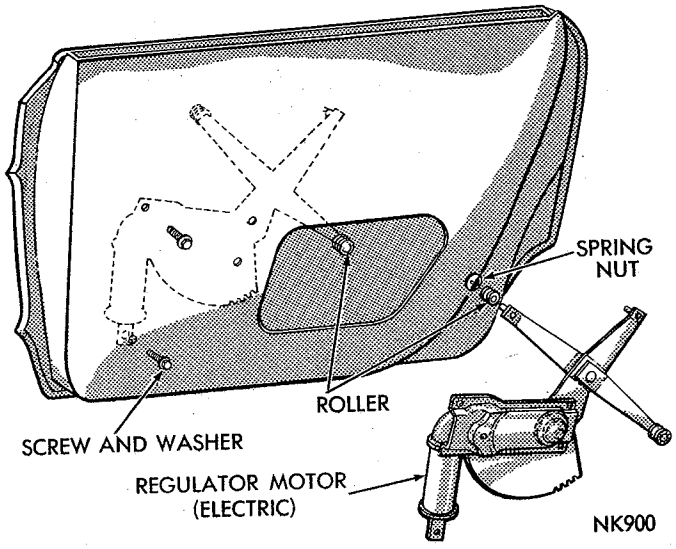


*Fig. 92—Rear Door Regulator*

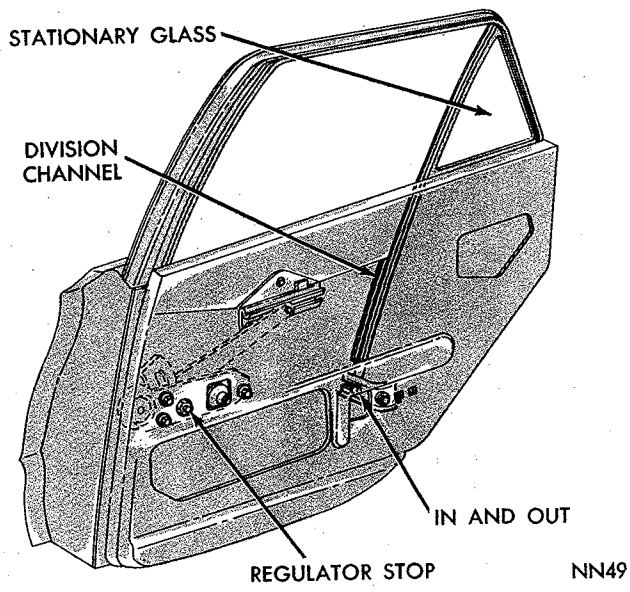


*Fig. 94—Rear Door Glass Adjustments—Belvedere Sedan*

MyMopar.com

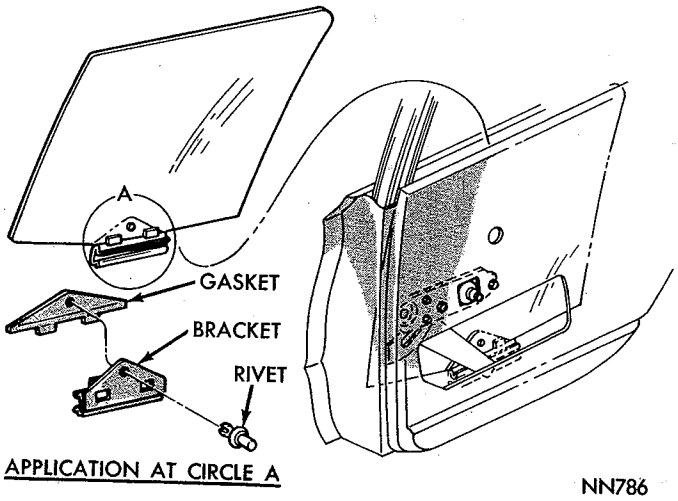


*Fig. 95—Rear Door Glass Replacement*

lator arm from the lift bracket.

(3) Remove the glass from the door.

(4) Push plug out of lift bracket rivet (Fig. 95).

(5) Pinch expandable ends of rivet together and push rivet out of glass.

### Installation

(1) Position lift bracket and gasket on glass and install rivet and plug.

(2) Lubricate the slide area of lift-bracket.

(3) Position glass into door and install regulator arm roller into lift bracket channel.

(4) Position glass into run channels and adjust glass.

## STATIONARY GLASS REPLACEMENT

### Removal

(1) Remove division channel attaching screws at upper and lower ends (Fig. 96) and remove channel.

(2) Move the glass and weatherstrip assembly forward and out of window opening.

(3) Inspect the weatherstrip.

### Installation

(1) Position glass and weatherstrip assembly to window opening and move rearward into upper frame.

(2) Insert division channel run into channel.

(3) Apply a 1½ inch length of sealer to joint area of division channel.

(4) With front glass in down position, insert division channel into door and move firmly against stationary glass weatherstrip.

(5) Install upper and lower attaching screws but do not tighten.

(6) Adjust the door glass.

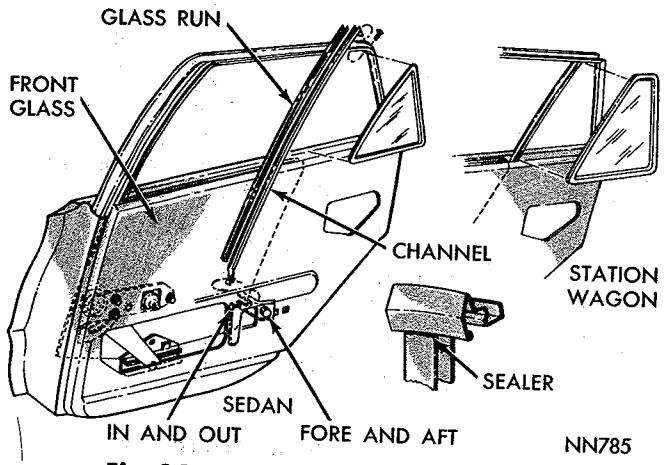


*Fig. 96—Rear Door Stationary Glass*

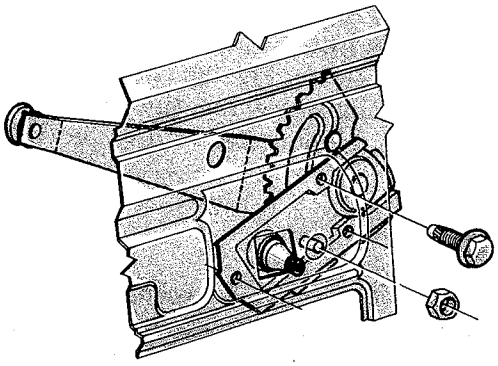


*Fig. 97—Rear Door Regulator*

### Regulator Replacement—Manual and Electric

Service procedures for the regulator (Fig. 97) are the same as outlined for the front doors.

## ELECTRIC REGULATOR MOTOR

### Tests

Electrical tests for the power operated windows are the same as outlined for Fury Models, however Wiring Diagram (Fig. 83) must be used.

### Replacement

When removing the motor from the regulator, it is imperative the regulator linkage be locked in position to prevent the mounting bracket (Fig. 75) from mov-

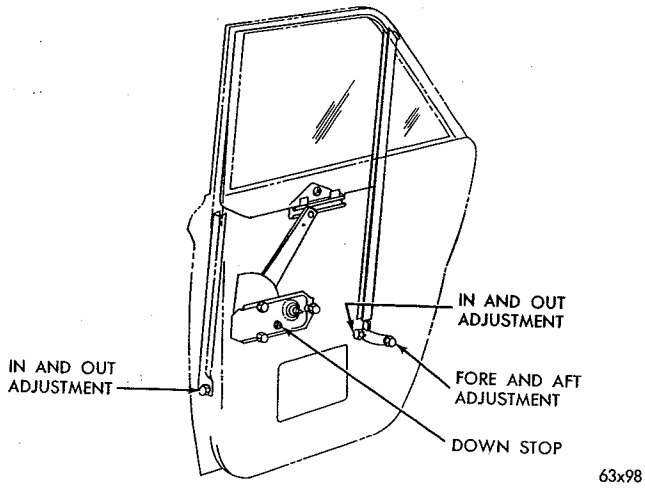


*Fig. 98—Rear Door Glass Adjustments—Valiant*

MyMopar.com

ing around the pivot.

### Division Channel Run

The division channel run (Fig. 96) is a press fit into the channel. When replacing the run, apply a 1½ inch length of sealer to joint area of division channel (Fig. 96).

## VALIANT MODELS

### Adjustments

The front glass run is fixed except for in-or-out adjustment at its lower end. The division channel can be adjusted fore or aft, as well as in or out (Fig. 98).

If adjustment of the division channel is necessary to relieve a bind when the glass is raised, loosen the upper channel attaching screw. Generally, sufficient movement of the channel is possible at this point to correct any binding or looseness of the glass. However, if additional channel movement is required, this can be obtained by lowering the glass and loosening the two attachment screws at the lower end of the channel.

Alignment of the front glass channel with the division channel can be accomplished by adjusting the in-or-out adjusting screw, accessible on the front face of the door. If additional in-or-out movement is required to obtain proper alignment of the glass, adjust the in-or-out adjusting screw at the lower end of the division channel.

## GLASS REPLACEMENT

### Removal

(1) Loosen window track adjusting nuts (Fig. 98) and remove glass from run channels.

(2) Remove regulator arm from lift bracket channel.

(3) Remove glass from door.

(4) Remove lift bracket from glass.

### Installation

Before installing glass, lubricate all moving parts of regulator with lubriplate.

(1) Install lift bracket on glass.

(2) Position glass into door opening.

(3) Install regulator arm roller into channel of glass lift bracket.

(4) Position glass into run channels.

(5) Adjust door glass.

## REGULATOR REPLACEMENT

### Removal

(1) Loosen front run channel lower mounting screw.

(2) Move run channel forward and slide glass out of channels.

(3) Remove regulator arm from lift bracket channel.

(4) Support glass in door.

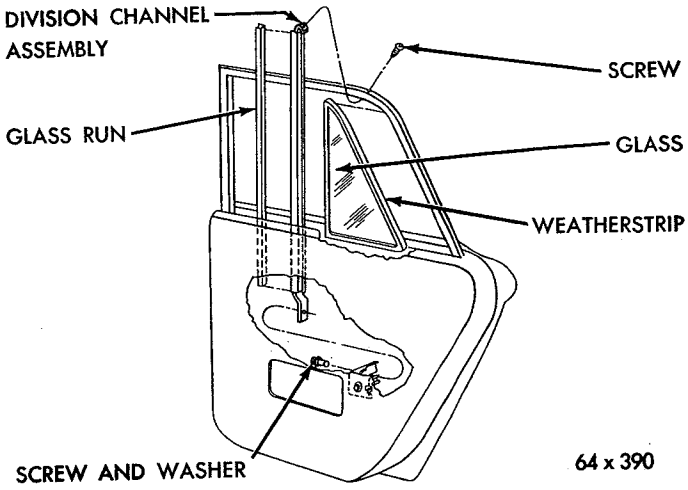


*Fig. 99—Rear Door Stationary Glass*

(5) Remove regulator attaching screws and regulator.

### Installation

(1) Lubricate regulator slide of lower glass channel.

(2) Position regulator on inner panel and install retaining screws.

(3) Position regulator arm roller into lift bracket channel and remove support.

(4) Position glass into glass run channels, and adjust door glass.

### Rear Door Stationary Glass

The service procedures for the rear door stationary glass (Fig. 99) are the same as outlined for Belvedere Models.

## HARDTOP-CONVERTIBLE MODELS

### Front Door (Fury Models)

### Adjustments

Refer to Figure 100 for the adjusting points of the vent wing and door glass assembly.

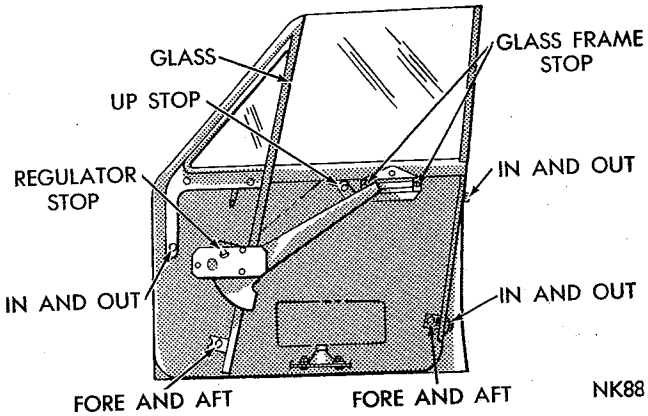


*Fig. 100—Front Door Glass Adjustments—Fury Hardtop—Convertible*

MyMopar.com

(1) Open door and run window approximately 2/3 way up.

(2) Adjust upper attachment of rear run channel so window is centered between inner and outer belt weatherstrips.

(3) Close door and loosen vent wing belt line screws. Run window completely up and tighten belt line screws.

(4) Adjust vent wing leg so boss of adjusting stud is against support and top of vent wing and door glass are inboard against roof rail weatherstrip.

(5) Position up stop down against regulator arm.

(6) Adjust vent wing division bar attachment at bottom to allow alignment with glass.

(7) With door open, run the glass half way down.

(8) Adjust rear lower track attachment to allow alignment with glass.

(9) Run glass down so top of glass is even with or slightly below belt line of door outer panel.

(10) On manually operated windows, position stop on the regulator plate against stop on regulator sector.

(11) On electrically operated windows, reach through major access hole and position glass lower frame stop against bumper.

## REMOVAL

### Vent Wing and Door Glass

To remove vent wing glass or weatherstrip after vent wing has been removed, it is necessary to first remove the swivel assembly (Fig. 101).

(1) Remove nut and washer from stud on lower end of vent wing leg.

(2) Remove screw and washer assemblies attaching the vent wing to belt line.

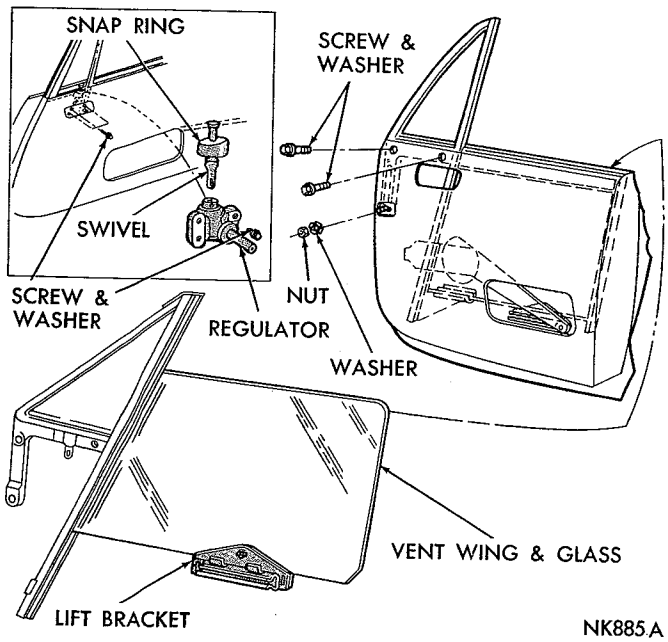


*Fig. 101—Glass Attachment*

(3) Remove vent wing leg stud from slot in hinge pillar support.

(4) Remove vent wing swivel to regulator screw.

(5) Move door glass forward disengaging it from rear run channel.

(6) Slide glass lift bracket off of regulator arm and remove door glass and vent wing assembly from door.

(7) Separate door glass from vent wing division bar.

(8) Remove plastic rivet attaching lift bracket to glass and remove bracket and gasket (Fig. 102).

### Installation

(1) Position lift bracket and gasket on glass and install plastic rivet.

(2) Assemble the door glass and frame to vent wing division bar.

(3) Lubricate slide area of lift bracket guide.

(4) With regulator in down position, install door glass and vent wing assembly into door and position vent wing pivot swivel into regulator assembly.

(5) Position glass lift bracket on regulator arm and move glass rearward into rear run channel.

(6) Position vent wing leg adjusting stud into slot in hinge pillar support.

(7) Install vent wing swivel to regulator screw.

(8) Install vent wing to belt line screws.

(9) Install nut and washer on vent wing adjusting stud.

(10) Adjust vent wing and door glass.

### Regulator Assembly

The service procedures for the front door regulator and vent wing regulator assembly are the same as sedan models.

### Glass Run Channel (Two Door Models)

### Removal

(1) Loosen vent attaching screws and adjusting stud nut and move glass forward out of run channel.

(2) Remove run channel reinforcement plate and

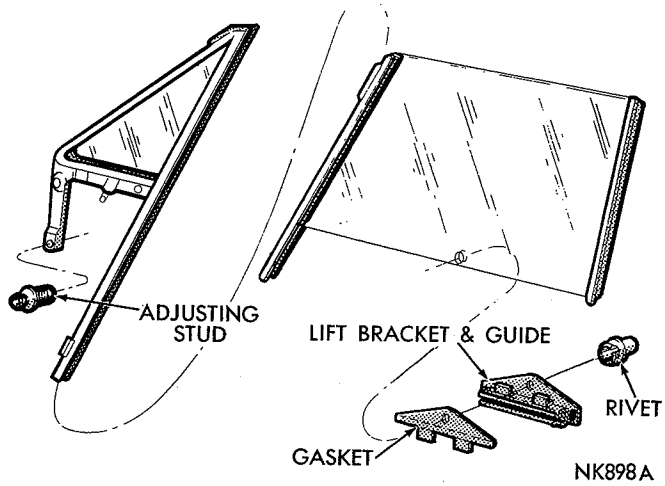


*Fig. 102—Glass Lift Bracket*

MyMopar.com

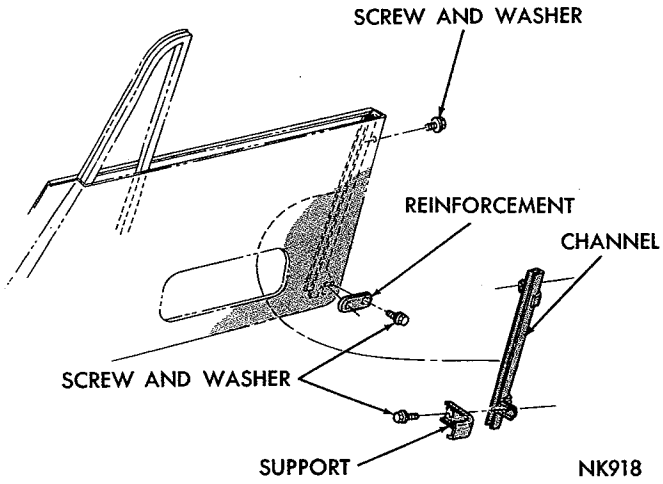


*Fig. 103—Glass Run Channel—2 Door*

screw from upper end of run channel door face (Fig. 103).

(3) Disengage support on bottom of channel from door panel and remove channel.

### Installation

(1) Position run channel and support into door assembly and install upper attaching screw at door face (Fig. 103).

(2) Position support at bottom of channel to inside panel and insert tab into slot.

(3) Install reinforcement plate at lower end of rear channel.

(4) Move door glass rearward and engage it in run channel.

(5) Tighten the vent wing attaching screws and stud nut.

(6) Adjust door glass and vent wing assembly.

### Glass Run Channel (Four Door Models)

The front door rear glass run channel used on four door hard top models is attached to the door face by screw and washer assemblies (Fig. 104).

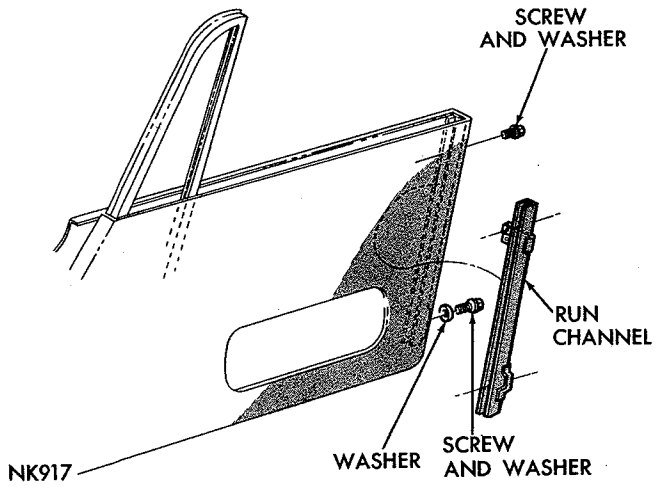


*Fig. 104—Glass Run Channel—4 Door*

## REAR DOORS

### Adjustments

(1) Raise window seating top of glass against roof rail weatherstrip and front of glass flush with top of front door glass.

(2) Adjust front track lower attachment (Fig. 105) so front of glass is aligned with rear of front door glass at roof rail. Turn adjusting sleeve nut counterclockwise to move glass inboard and clockwise to move glass outboard.

(3) Adjust pivot bracket so front edge of glass is parallel to rear edge of front door glass.

(4) Move front track upper attachment forward so window weatherstrip is against front door window.

(5) Position front and rear up stops down against lower frame of glass assembly.

(6) Run window half way down and tighten lower rear roller track attaching screw.

(7) Run window down until top of glass is even with or slightly below belt line.

(8) Position stop on the regulator plate against stop on the regulator sector and tighten nut.

(9) Move the down stop on lower frame down against the bumper and tighten the screws.

(10) Run window to fully up position.

(11) Loosen center support front track screw and move support inboard against inside panel. Tighten screw.

(12) Adjust center rear track until "boss" is against outboard side of inside panel.

## GLASS REPLACEMENT

### Removal

(1) Remove the down stop from glass lower frame (Fig. 106).

(2) Remove the spring nuts from regulator arm

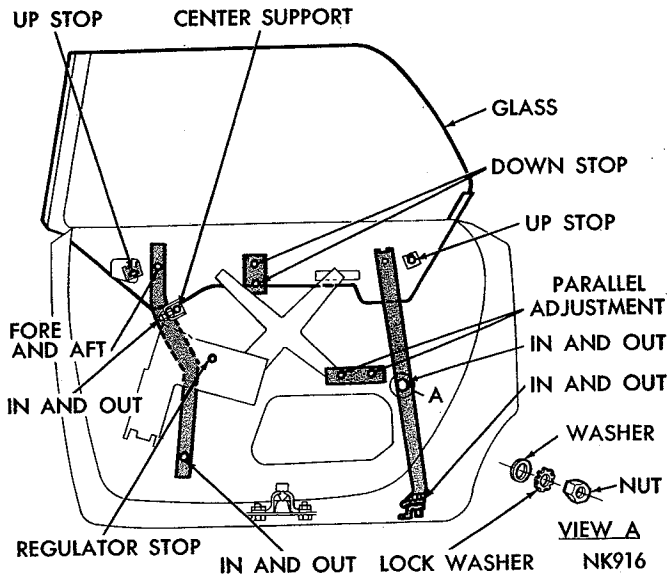


*Fig. 105—Rear Door Glass Adjustments*

MyMopar.com

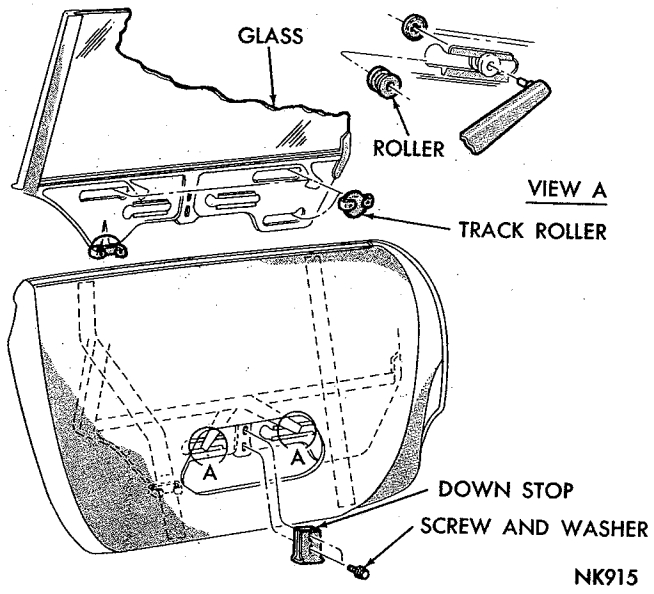


**Fig. 106—Rear Door Glass Replacement**

studs.

(3) Support window assembly and remove the regulator studs from glass lower frame.

(4) Remove glass and lower frame assembly from door.

(5) Inspect roller assemblies for damage and excessive wear.

### Installation

(1) Lubricate regulator arm roller and track roller slots in lower frame of door glass.

(2) Insert roller assemblies (Fig. 106) into the slots of glass lower frame with spring loops down on top rollers and up on bottom rollers.

(3) Insert glass assembly into door, positioning rollers on lower frame onto front and rear roller tracks.

(4) Lower glass to regulator arms and insert a roller into each arm stud roller slot in lower frame.

(5) Insert the regulator studs into rollers and install the spring nuts.

(6) Lower the glass, install down stop and adjust glass.

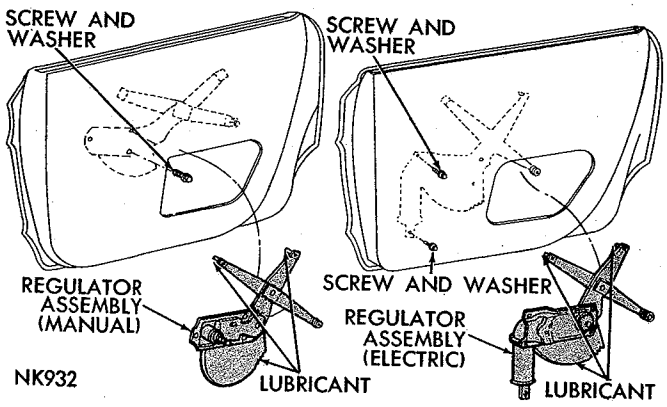


**Fig. 107—Rear Door Regulators**

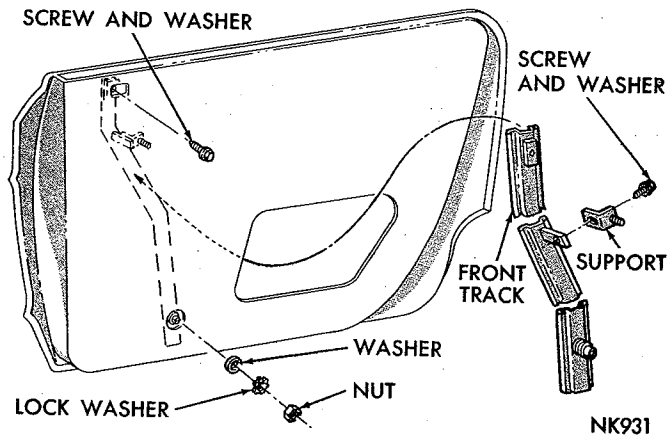


**Fig. 108—Rear Door Glass Front Track**

### Regulator Assembly (Manual and Electric)

The regulators are attached to the door inner panel by screw and washer assemblies (Fig. 107). Spring nuts attach the regulator arm studs to the door glass lower frame and roller assembly. Lubricate tooth contact area approximately ½ inch wide along entire length of area on outboard side of sector and studs on front and rear arms (Fig. 107).

### Regulator Motor

Service procedures for the replacement and testing of the electric regulator motor is the same as outlined for the front doors.

### Front Track Assembly

### Removal

(1) Remove door glass assembly.

(2) Remove nut and washers attaching track assembly to lower part of door inside panel (Fig. 108).

(3) Remove screw and washer assembly attaching track at the belt line.

(4) Remove track assembly through large access opening in door inner panel.

(5) Remove center support assembly from track.

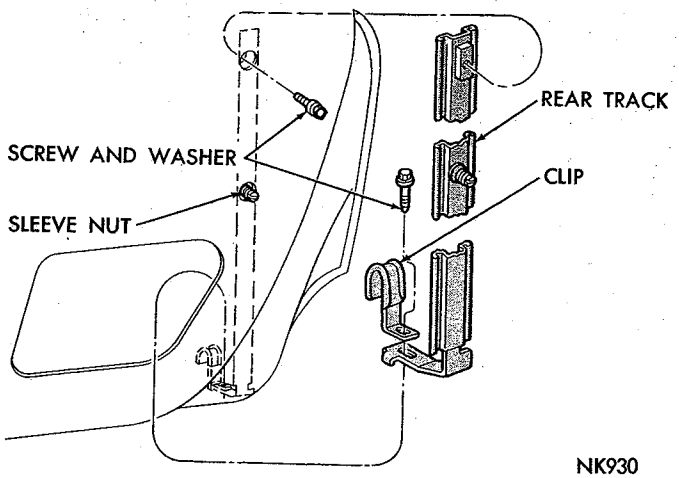


**Fig. 109—Rear Door Glass Rear Track**

MyMopar.com

### Installation

(1) Install center support bracket to plate of track (Fig. 108).

(2) Position track assembly into door, through large access opening, and position top end to attaching slot in belt reinforcement.

(3) Install screw and washer assembly but do not tighten.

(4) Insert stud on bottom of track through the attaching hole in inside door panel and install nut and washers finger tight only.

(5) Install and adjust door glass.

## Rear Track Assembly

### Removal

(1) Remove door glass assembly.

(2) Remove screw and washer assembly attaching lower part of the track to the door. Remove the door lock wiring clip if used (Fig. 109).

(3) Remove adjusting sleeve nut from the stud at center of track.

(4) Remove screw and washer assembly attaching track to belt reinforcement.

### Installation

(1) Insert track assembly into door through large access opening in door inner panel (Fig. 109).

(2) Align upper attaching screw hole in track with attaching hole in belt line and hole in lower track support with bottom while inserting stud on center of track through hole in door inner panel.

(3) Install screw and washer assembly at top finger tight only.

(4) Install screw and washer assembly, and wiring clip if used, to bottom support finger tight only.

(5) Install sleeve adjusting nut on track stud.

(6) Install and adjust door glass.

## Belvedere-Satellite Models

### Vent Wing and Door Glass Adjustments

(1) Open door and lower glass 1/3 way.

(2) Adjust rear run channel upper attachment (Fig. 110) until window is centered between inner and outer belt line weatherstrips and tighten nut.

(3) Close door, raise window seating top of glass and front of vent wing fully against and parallel to roof rail weatherstrip.

(4) Tighten vent wing belt line screws and nut on front leg of vent wing.

(5) Tighten vent wing bracket nuts on inside panel, front face of door.

(6) Position and tighten up stop against regulator arm.

(7) Tighten vent wing division channel support screw.

(8) Tighten division channel to lower support screw.

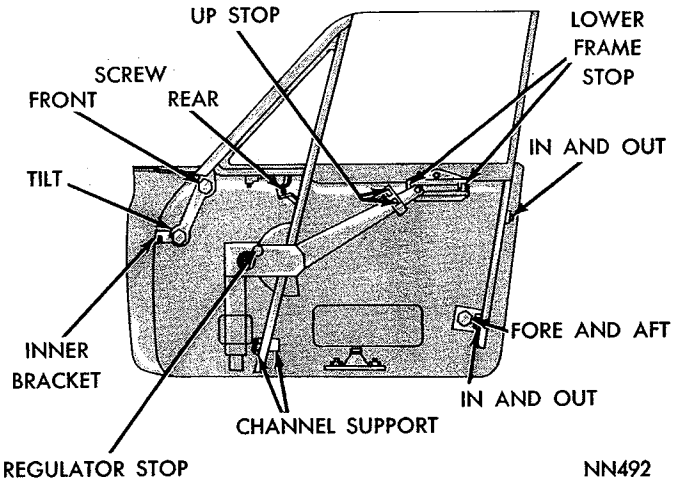


**Fig. 110—Front Door Glass Adjustments—Belvedere - Satellite - Hardtop - Convertible**

(9) Open door, lower window ½ way and tighten rear track lower screw.

(10) Tighten support to glass run channel screw.

(11) Lower window until top of glass is even with or slightly below belt line outer panel.

(12) Position and tighten regulator stop against regulator sector stop.

(13) Position and tighten stop on glass lower frame against bumper.

### Vent Wing and Door Glass Replacement

Service procedures for replacement of the door glass or vent wing (Fig. 111) are the same as for Fury Models.

Refer to Figures 112 and 113 for the vent wing and door glass attachment areas.

### Regulator Replacement—Manual and Electric

The regulators are attached to the door inner panels with screw and washer assemblies (Fig. 82).

### Electric Regulator Motor

**Whenever it is necessary to remove the motor from**

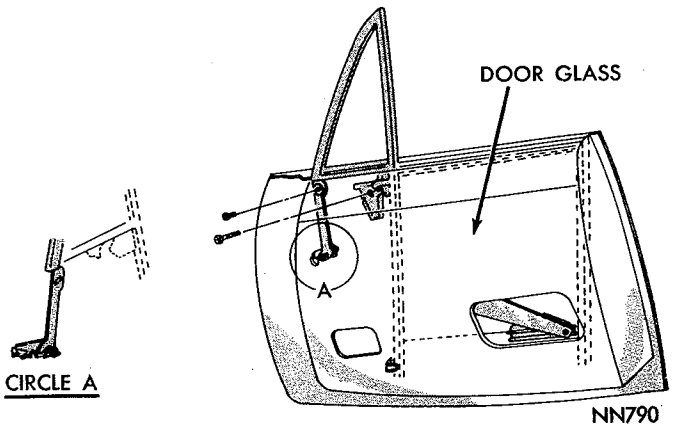


**Fig. 111—Vent Wing Replacement**

MyMopar.com

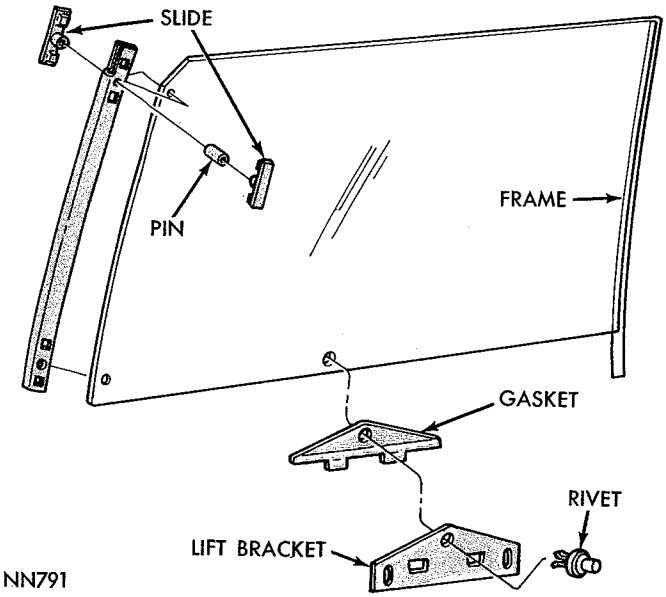


*Fig. 112—Glass Slide and Weatherstrip*

**regulator, it is imperative the linkage be clamped in a vise (Fig. 75) to lock it in place. Failure to do this allows the assist spring to drive the mounting bracket around the lift pivot.**

### Tests

Electrical tests for the power operated windows are the same as for Fury Models, however Wiring Diagram (Fig. 83) must be used.

### Glass Run Channel

Service procedures for the glass run channel (Fig. 110) are the same as outlined for the two door hardtop Fury Models.

## Valiant Models

### Adjustments—Vent Wing

The two adjustments near the belt line (Fig. 114) permit shifting of the vent assembly fore or aft and up or down. The two vent frame attaching screws at

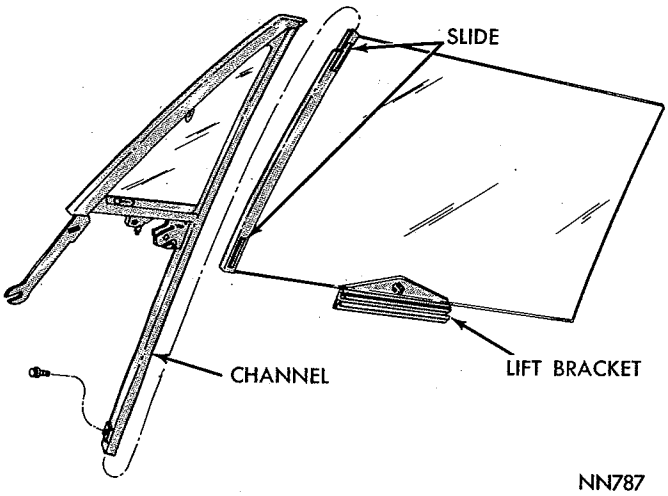


*Fig. 113—Assemble Door Glass and Vent Wing*

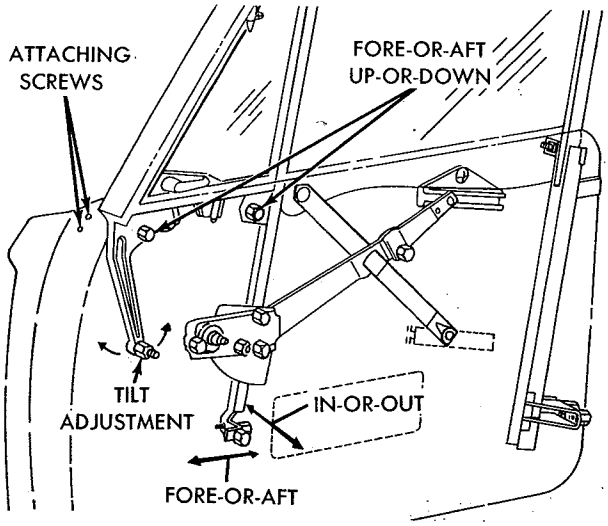


*Fig. 114—Hardtop Vent Wing Adjustments—Valiant*

the front of the vent must be loosened to allow the frame to move. The adjusting screw at the lower end of the vent wing leg is used to tilt the top of the vent frame in or out. The lower end of the division channel can be adjusted both in or out and fore or aft.

### Door Glass

The in-or-out adjustment at the lower end of the division channel (Fig. 114) affects the fit of the vent wing frame at the roof rail. It tips the top of the vent frame in or out. Once the vent frame is correctly adjusted, the in-or-out adjustment of the lower end of the division channel is established.

The fore-or-aft adjustment at the lower end of the division channel removes binding or looseness of the glass when in the lowered position.

The lower end of the lower rear channel can be adjusted in or out to align it with the division channel. Both attaching screws at the lower end of the rear channel must be loosened to make this adjustment. If the glass binds at the belt line, the upper end of the rear channel can be adjusted in or

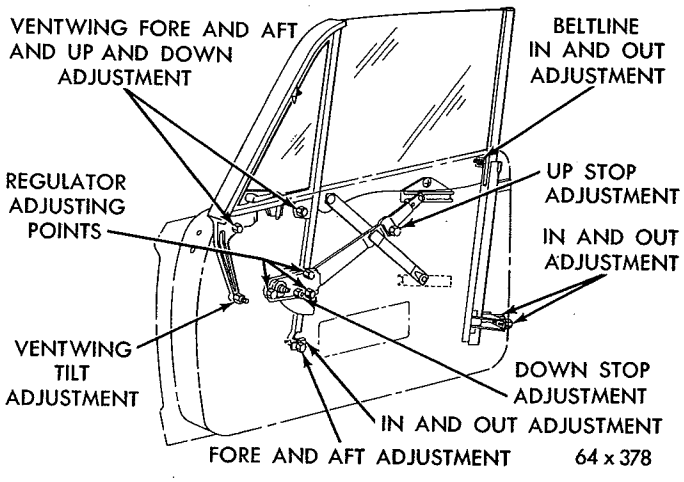


*Fig. 115—Door Glass Adjustments*

MyMopar.com

out to enter the glass between the inner and outer belt line weatherstrip.

### Vent Wing Replacement

#### Removal

(1) With door glass in down position, remove division bar adjusting screw (Fig. 115).

(2) Remove two vent frame attaching screws from front of door.

(3) Disconnect outer belt weatherstrip far enough for clearance of division bar when it is removed.

(4) Tilt vent frame to rear and remove from door.

#### Installation

(1) The tilt adjustment screw should be in lowest position, when installing the vent wing assembly.

(2) With vent wing tilted toward rear of door, guide division bar and tilt adjustment bracket into door.

(3) Install division bar adjusting screw and vent wing to door panel screws.

(4) Position tilt adjustment screw in door inner panel and install lock nut.

(5) Install two vent frame screws in front of door.

(6) Adjust the vent wing.

## DOOR GLASS REPLACEMENT

#### Removal

(1) Lower window and remove up stop.

(2) Remove clip from regulator forward arm pivot (Fig. 115).

(3) Loosen rear track adjusting screws and remove glass from channel.

(4) Remove regulator rear arm from lift bracket channel.

(5) Remove glass from door.

(6) Remove lift bracket and bushing from door glass (Fig. 116).

#### Installation

(1) Install lift bracket and forward regulator arm bushing into glass.

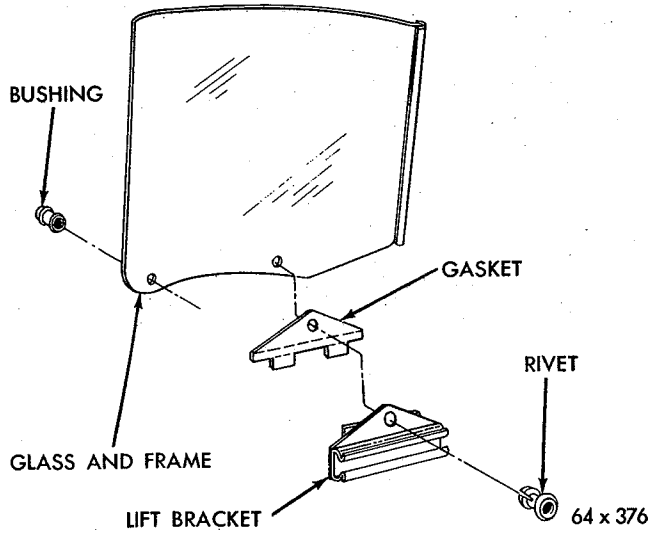


*Fig. 116—Door Glass Attachment*

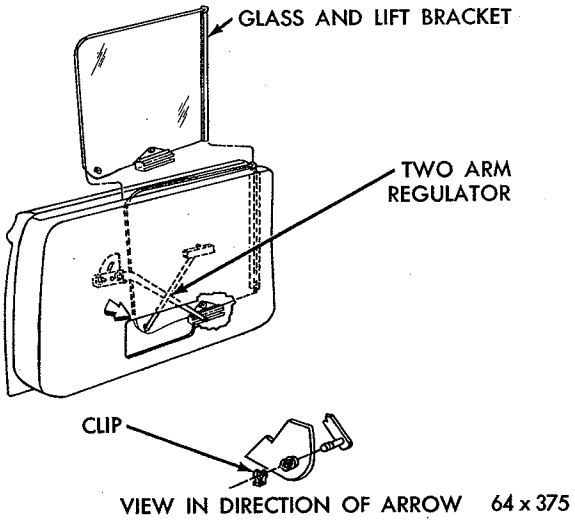


*Fig. 117—Regulator Assembly*

(2) Position glass into door and position rear regulator arm into lift bracket channel.

(3) Position regulator front arm pivot through bushing, in glass, and install retainer clip.

(4) Position glass in division bar channel and rear channel.

(5) Adjust door glass and install the up stops.

#### Regulator Assembly

The two-arm regulator used on hardtop models (Fig. 117), is attached to a nylon-bushed hole at the front of the glass. The lift bracket, toward the rear of the glass, is attached to the glass with a plastic rivet.

For a good engagement of the glass in the division channel run, shift the regulator assembly forward. It is important that the glass seat fully in the division channel. Alignment of the front edge of the glass with the division channel is also important. Shift the rear of the regulator assembly up or down to level the glass and align it with the division channel.

# QUARTER PANELS

## GARNISH MOULDINGS

The garnish mouldings should be positioned and held in place to assure satisfactory alignment. Do not over-tighten the mounting screws, or the moulding will become damaged at the screw hole area.

## TRIM PANELS

The rear seat cushion and back must be removed to gain access to the trim panel attaching screws. The trim panels (Figs. 118, 119, 120 and 121) are attached with screws and clips. When installing, make certain the watershield is properly cemented and positioned.

## HANDLES

The regulator handles are attached with allen head screws.

MyMopar.com

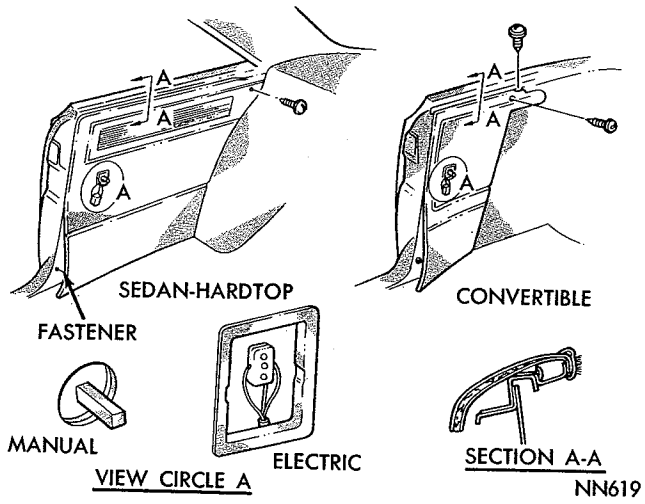


*Fig. 118—Quarter Trim Panels—Fury*

## GLASS ADJUSTMENTS

### Fury Sedan Models

Refer to Figure 122 for sedan quarter glass adjusting points.

(1) Run glass up to approximately ⅛ inch below window opening frame.

(2) Adjust regulator pivot bracket so gap at top of window is parallel to window opening frame. To lower front of glass, raise front of pivot and to raise front of glass lower front of pivot.

(3) Loosen the rear run retainer screw and lower window halfway to allow rear run to align itself with glass.

(4) Tighten the rear run retainer screw.

(5) Lower glass so top is even with or slightly below the belt line of the outside panel.

(6) Position and tighten stop on regulator plate against stop on regulator sector.

(7) Position rear run retainer forward against rear edge of glass. Tighten screw securely.

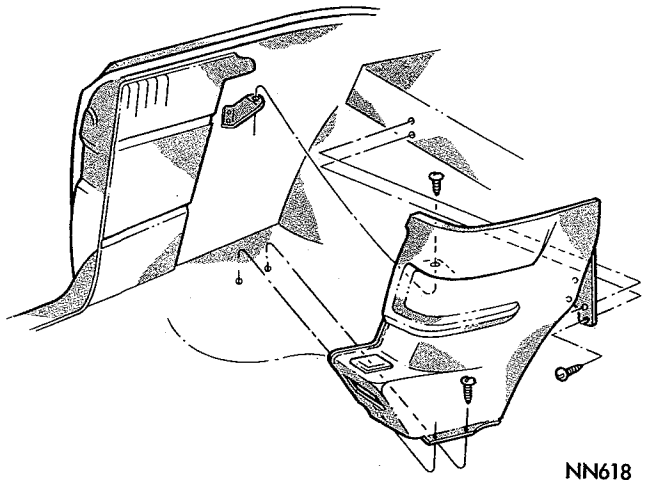


*Fig. 119—Quarter Pocket Panel—Fury*

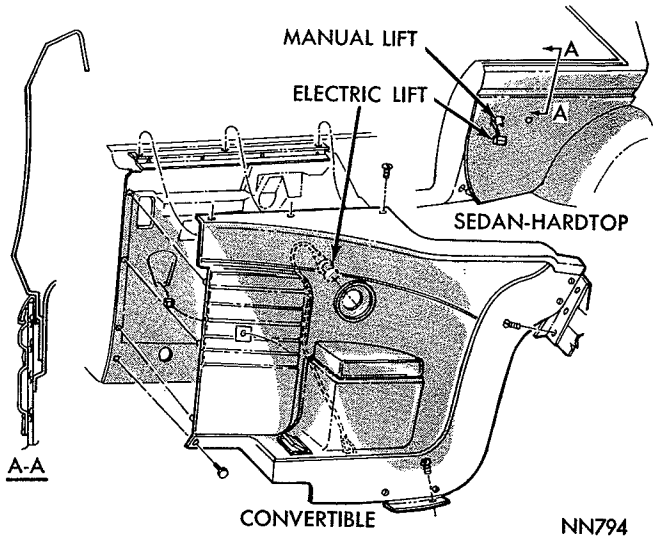


*Fig. 120—Quarter Trim Panels—Belvedere - Satellite*

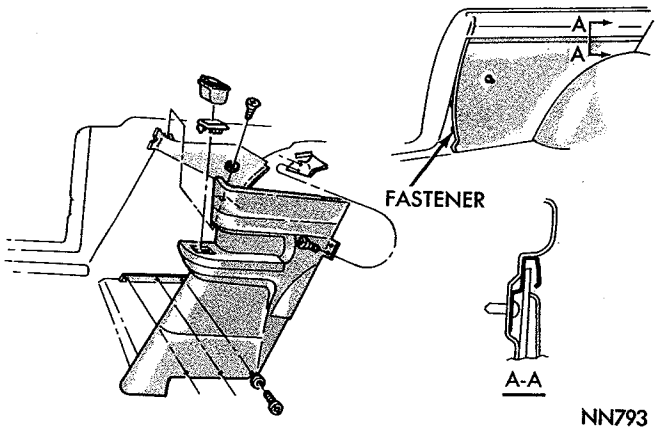


*Fig. 121—Quarter Trim Panels—Valiant*

### Glass Replacement

#### Removal

(1) Disengage regulator arm from lift bracket.

(2) Tilt front top edge of glass up (Fig. 123) and pull glass upward disengaging the rear lift bracket

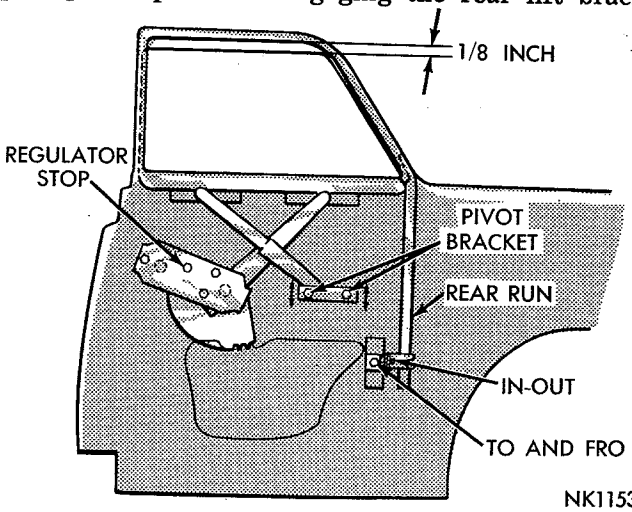


*Fig. 122—Quarter Glass Adjustments—Fury Sedan*

MyMopar.com

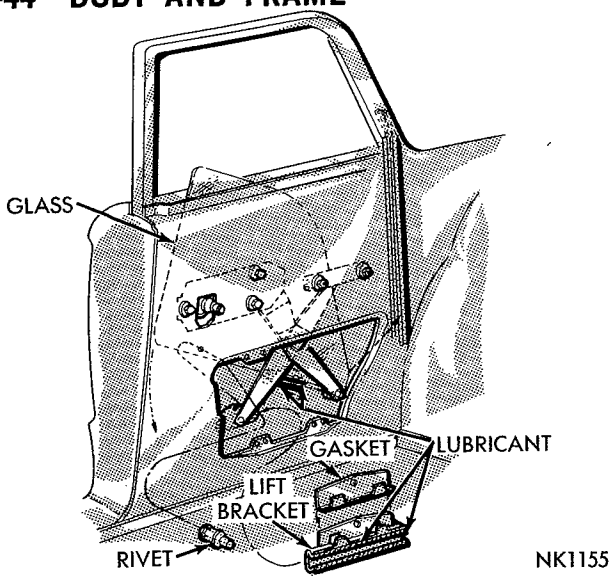


*Fig. 123—Quarter Glass Attachment*

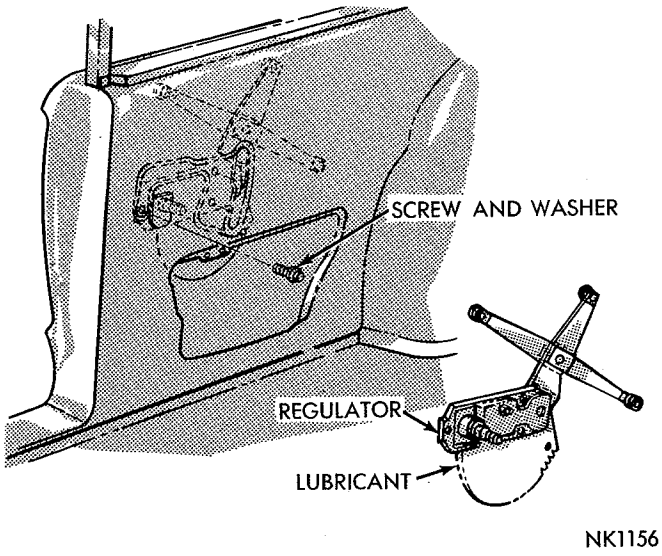


*Fig. 125—Regulator Assembly*

from regulator arm.

(3) Remove glass assembly from panel.

### Glass Lift Bracket

The glass lift brackets (Fig. 124) are attached to the glass with plastic rivets. Gaskets are used between the glass and the brackets. Lubricate the channel area of the brackets before they are installed.

### Installation

To facilitate glass installation, install the rear lift bracket only, before inserting glass into quarter panel.

(1) Install rear lift bracket and gasket on glass.

(2) Lower glass into panel, with rear edge down and lift bracket forward.

(3) Position rear lift bracket over roller on regulator rear arm.

(4) Rotate the front of glass forward so glass is positioned in front and rear run channels.

(5) Position front lift bracket on regulator front arm.

(6) Position lift bracket and gasket on glass and install plastic rivet. Adjust glass.

### Regulator Assembly

The regulator assembly (Fig. 125) is attached to the quarter inner panel with three screw and washer assemblies. The roller assemblies on the regulator top arms engage the channels of the glass lift brackets. The lower regulator arm roller engages the glass pivot bracket and channel assembly. Apply lubricant to the tooth contact area approximately ½ inch wide along the entire length of the area on the outboard side of the sector (Fig. 125).

### Electric Regulator Motor

The service procedures and electrical tests for the regulator motor are the same as outlined for the door regulators.

### Glass Run

### Removal

(1) Remove quarter glass assembly.

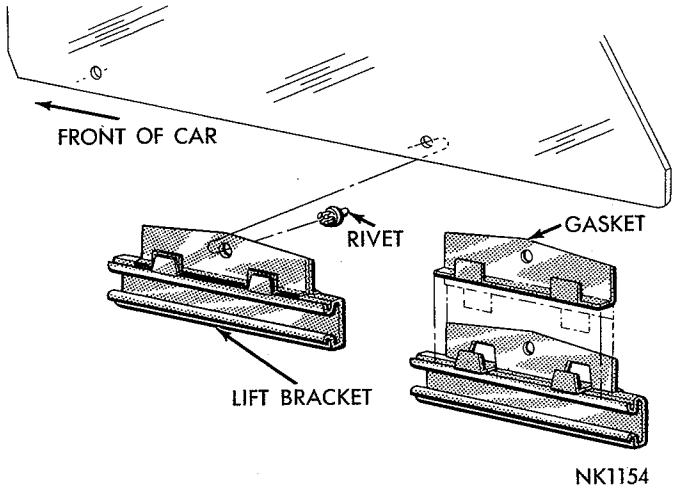


*Fig. 124—Glass Lift Bracket*

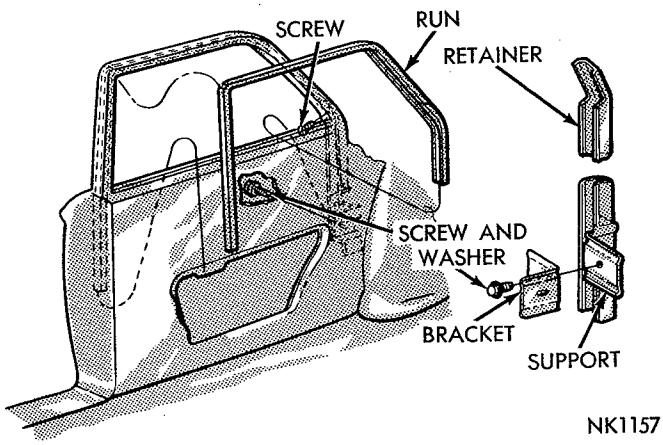


*Fig. 126—Glass Run*

MyMopar.com

(2) Remove glass run from rear run retainer (Fig. 126) and from channel between inside and outside panels. The run is a press fit into the channel and lower run retainer.

(3) Remove screw attaching rear run retainer to window opening frame and drain trough.

(4) Remove screw and washer attaching rear run retainer support to support bracket.

(5) Remove run retainer.

### Installation

(1) Position run retainer into quarter panel aligning support to rear of support bracket.

(2) Install support to bracket screw loosely.

(3) Install run retainer screw at window frame and drain trough area.

(4) Tighten retainer support bracket screw securely.

(5) Position glass run into quarter panel.

(6) Index run into upper front corner of window opening frame.

(7) Press run into channel between inner and outer panels and into rear lower run retainer.

(8) Install quarter window.

## HARDTOP MODELS

### Adjustments

(1) Close door and adjust upper rear track attachments (Fig. 127) so rear of window lightly touches the belt line weatherstrip. To move window inboard, turn sleeve nut clockwise and to move outboard turn sleeve nut counterclockwise.

(2) Run window up, seating top of glass fully against roof rail weatherstrip and front of window flush with top of front door window.

(3) Adjust upper front track attachment so front of window is aligned with rear of front door window at belt line. Turn sleeve nut clockwise to move window in and counterclockwise to move window out.

(4) Adjust lower front track attachment so front of window is aligned with rear of front door window at roof rail. Turn sleeeve nut counterclockwise to move window in and clockwise to move window out.

(5) Adjust pivot bracket so top of window is fully against and parallel to roof rail weatherstrip. To raise front of window, lower front of pivot bracket.

(6) Move upper front track attachment forward so weatherstrip of window is against front door window.

(7) Position up stops against lower frame of the window.

(8) Run the window down so top of glass is even with or slightly below belt line.

(9) Adjust lower rear track attachment so "boss" is against outboard side of inside panel.

(10) On manually operated regulators, position stop on the regulator plate against stop on regulator sector. On electrically operated regulators, position stop against bumper (Fig. 127).

(11) Move front track center support so it is positioned against brace and tighten screw securely.

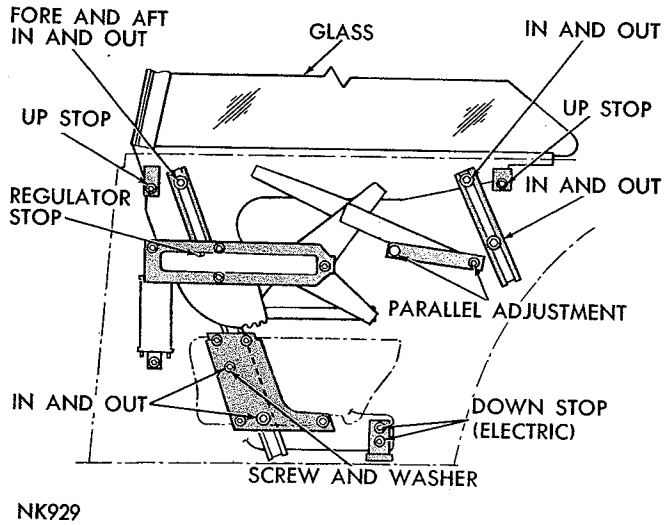


**Fig. 127—Quarter Glass Adjustments—Fury Hardtop**

### Glass Replacement

### Removal

(1) Remove down stop assembly from glass lower frame (Fig. 128).

(2) Remove spring nuts from regulator arm studs.

(3) Support window assembly and remove regulator studs from roller assemblies.

(4) Remove rollers from regulator arm slots in glass lower frame.

(5) Remove glass and lower frame assembly from quarter panel.

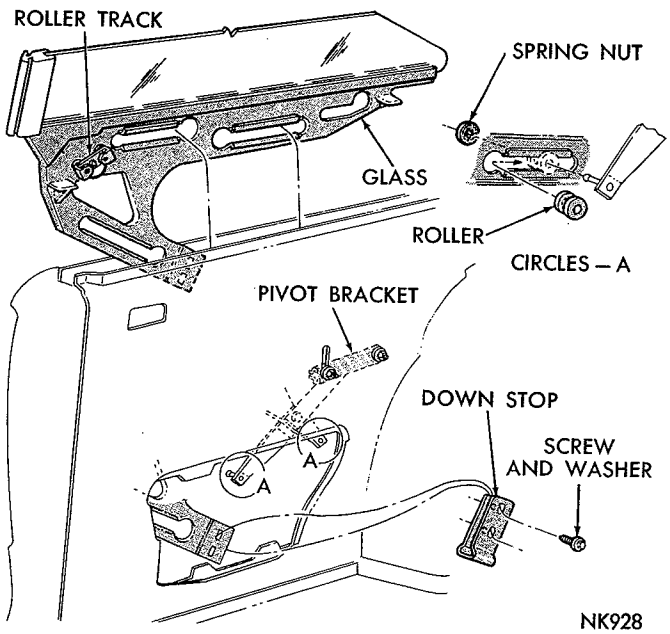


**Fig. 128—Quarter Glass Replacement**

MyMopar.com

### Installation

(1) Inspect front and rear track roller assemblies for damage or excessive wear.

(2) Apply lubricant to regulator arm roller slots, track slide roller slot and bracket and roller assembly slot in glass lower frame.

(3) Position window assembly into quarter panel, engaging the track roller assemblies.

(4) Insert regulator arm rollers in glass lower frame slots and position regulator arm studs into rollers, securing in place with spring nuts (Fig. 128).

(5) Install down stop assembly on glass lower frame and adjust glass.

### Regulator Assembly (Manual and Electric)

The regulator assembly (Fig. 129) is attached to the door inner panel with screw and washer assemblies. The regulator arm studs are retained in the glass lower frame rollers with spring nuts. Lubricate the regulator tooth contact area approximately ½ inch wide along the entire length of the arc on the outboard side of the sector and to the front and rear arm roller studs.

### Electric Regulator Motor

The service procedures and tests for the regulator motor are the same as outlined for door regulators.

### Front Track

### Removal

(1) Remove nut and washers attaching track to belt line (Fig. 130).

(2) Remove nut and washers attaching track brace to stud on track (Fig. 131) and screw and washer assemblies attaching brace to inside panel.

(3) Remove track roller assembly from slot in glass lower frame.

(4) Slide track assembly down off of roller assembly on glass lower frame and out through large access opening in the door.

(5) Remove track support assembly.

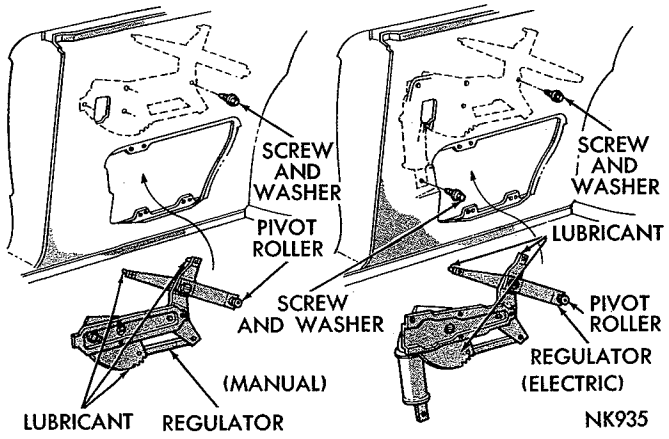


*Fig. 129—Regulator Assemblies*

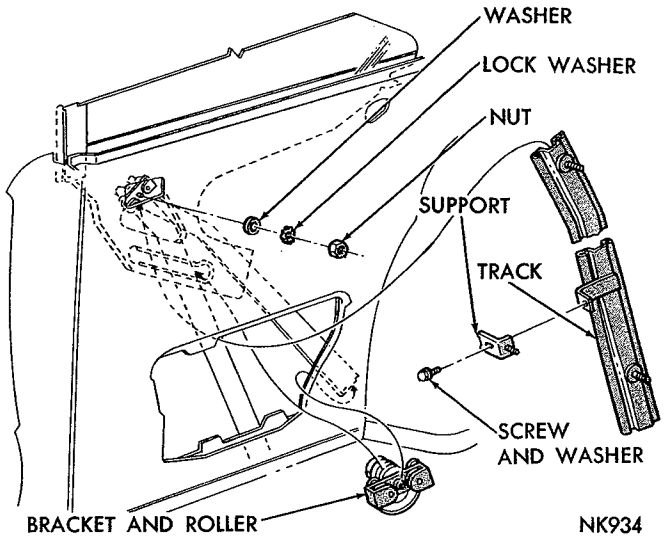


*Fig. 130—Quarter Window Front Track*

### Installation

(1) Inspect roller assemblies for damage or excessive wear.

(2) Install support on track assembly.

(3) Insert track assembly into roller assembly on glass lower frame.

(4) Assemble bracket and roller assembly to bottom of track and slide roller up track and insert into slot on glass lower frame.

(5) Insert track upper stud into slot at belt line and install nut and washers.

(6) Position brace on inside panel attaching holes and install screw and washer assemblies.

(7) Insert lower stud, on track, through hole in brace, install nut and washers, and adjust glass.

### Rear Track Assembly

### Removal

(1) Remove nuts and washers attaching rear track

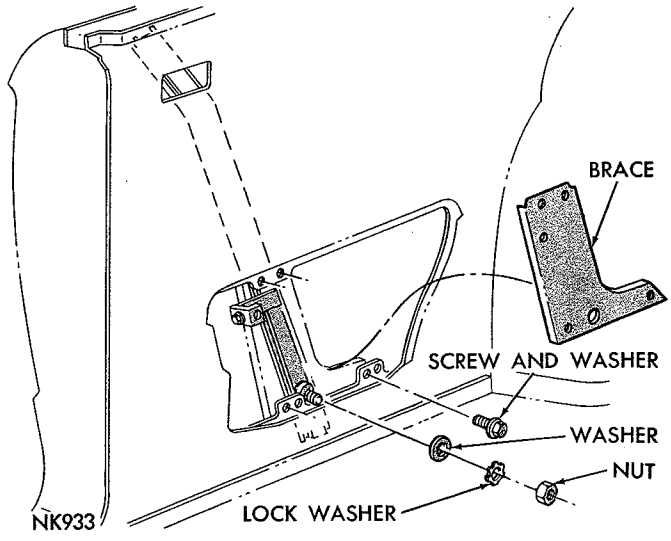


*Fig. 131—Quarter Window Front Track Brace*

MyMopar.com

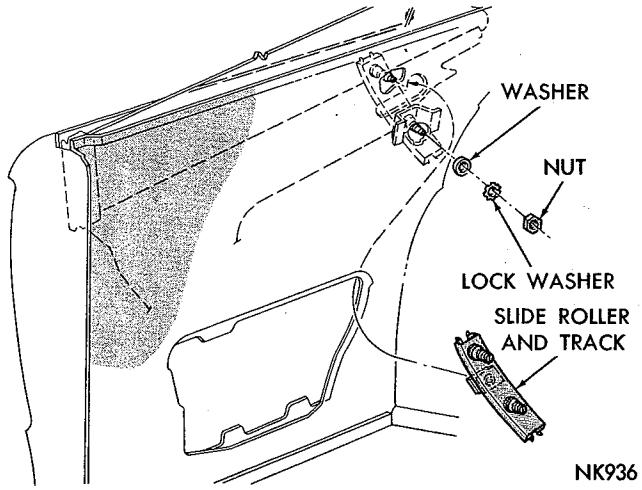


*Fig. 132—Quarter Window Rear Track*

assembly to belt line reinforcement (Fig. 132).

(2) Remove lower sleeve nut from hole in support on inside panel, top sleeve nut of track from belt reinforcement and roller from slot in glass lower frame.

(3) Remove track assembly from door through large access opening.

### Installation

(1) Position track assembly into door.

(2) Insert roller assembly into slot in glass lower frame.

(3) Insert track top sleeve nut into hole in belt reinforcement and lower sleeve nut into hole in support on inside panel.

(4) Install nut and washers attaching track to belt reinforcement and adjust glass.

## CONVERTIBLE MODELS

### Adjustments

Refer to Figure 133 for the adjusting points.

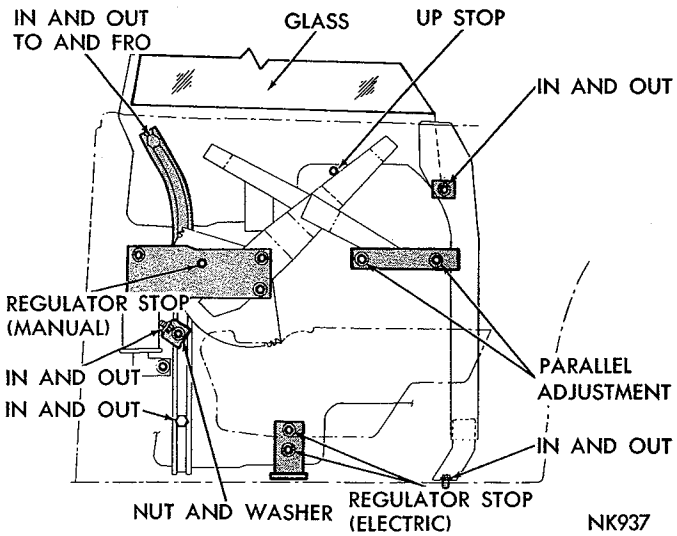


*Fig. 133—Quarter Window Adjustments—Fury Convertible*

(1) With front door closed, run window approximately ¾ way up.

(2) Adjust upper stabilizer so rear of window touches lightly on belt line weatherstrip.

(3) Run window up fully so front of quarter window is flush with top of front door window and setting lower frame parallel to belt line of quarter outside panel.

(4) Adjust upper track attachment so front of window is aligned with rear of door window at belt line. To move window in, turn sleeve nut clockwise, and to move window out, turn sleeve nut counterclockwise.

(5) Adjust lower track attachment so front window is aligned with rear of front door window at top. To move window in, turn sleeve nut counterclockwise and to move window out, turn sleeve nut clockwise.

(6) Adjust pivot bracket so window is parallel to rear of front door window at front and bottom parallel to quarter outside panel at belt line. Lower pivot bracket to raise glass and raise bracket to lower glass.

(7) Move upper track attachment forward so weatherstrip is against front door window.

(8) Position up stop down against rear arm of regulator.

(9) Run window down so top of glass is level with or slightly below belt line of quarter outside panel.

(10) Adjust lower stabilizer attachment in or out as necessary.

(11) On manually operated windows, position stop on regulator plate against stop on regulator sector. On electrically operated windows adjust down stop against bumper.

(12) Adjust center support inboard against inside panel.

### Glass Replacement

#### Removal

(1) Remove spring nuts from regulator arm studs (Fig. 134) and remove the studs from rollers.

(2) Remove rollers from glass lower frame slots.

(3) Raise glass and lower frame assembly out of quarter panel.

(4) Inspect regulator arm stud rollers, and glass track rollers for damage or excessive wear.

#### Installation

(1) Lubricate glass lower frame regulator arm roller slots and track roller slot.

(2) Install track roller assembly into track slot of lower frame with spring loop up.

(3) Position glass assembly into door and install regulator arm stud rollers into glass lower frame slots.

(4) Position regulator arm studs into rollers and install spring nuts and adjust glass.

### Regulator Assembly (Manual and Electric)

The regulators (Fig. 135) are attached to the quar-

MyMopar.com

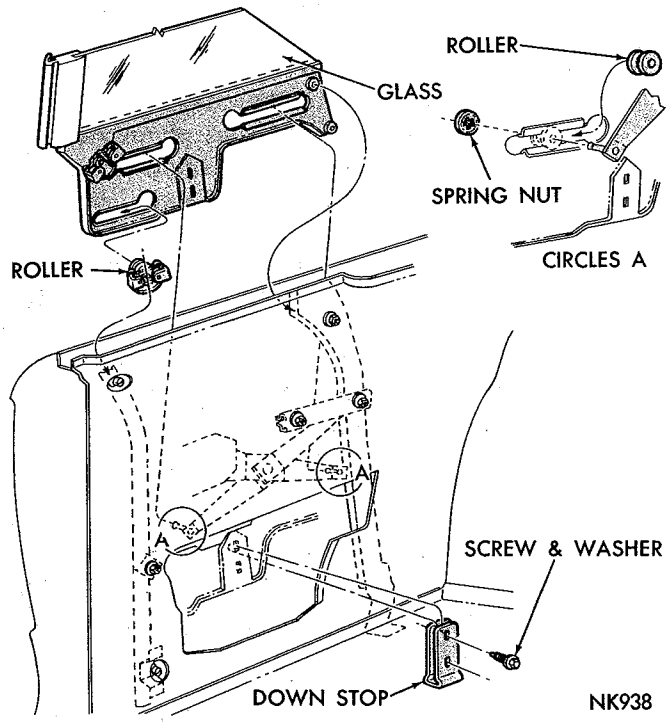


**Fig. 134—Quarter Window Replacement—Convertible**

ter inside panel with screw and washer assemblies. When installing a regulator, lubricate the tooth contact area approximately ½ inch wide along the entire length of the arc on the outboard side of the sector and studs on the front and rear studs.

### Regulator Motor

The method of servicing and testing the regulator motor is the same as for sedan models.

### Front Track

### Removal

(1) Remove glass and lower frame assembly.

(2) Remove adjusting stud nut and washers from lower end of track (Fig. 136).

(3) Remove center support nut and washer.

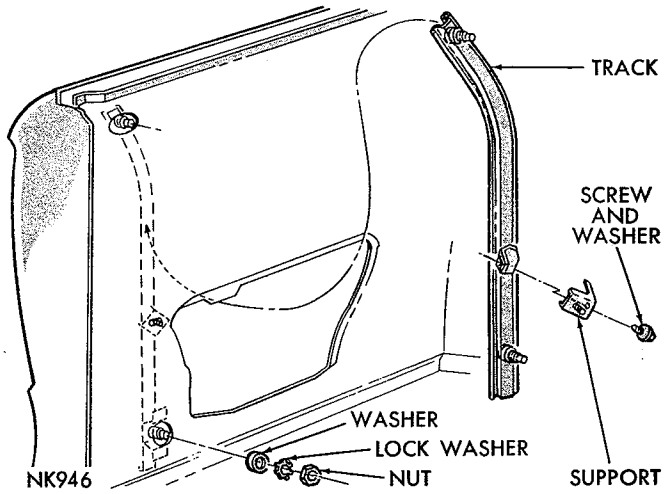


**Fig. 136—Quarter Window Front Track—Convertible**

(4) Remove track upper adjusting stud nut and washers.

(5) Remove track and center support assembly out of quarter panel through the large access opening.

### Installation

(1) Position track and center support assembly into quarter panel through large access opening and insert studs into openings in inner panel (Fig. 136).

(2) Install track upper adjusting stud nut and washers finger tight only.

(3) Install center support nut and washer finger tight only.

(4) Install track lower adjusting stud nut and washers finger tight only.

(5) Install and adjust the quarter glass.

### Stabilizer Channel

The quarter glass stabilizer channel assembly is attached to the quarter inner panel at the upper end and to side sill outer panel and reinforcement at the lower end (Fig. 137). The adjusting stud at the upper end of the stabilizer allows in and out movement to position the top edge of the glass against the belt

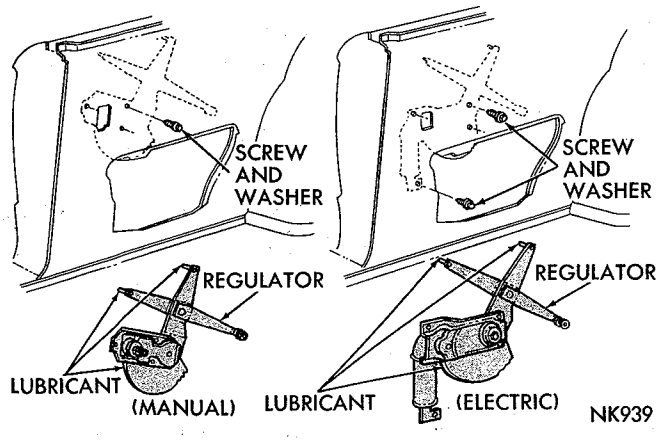


**Fig. 135—Quarter Window Regulator—Convertible**

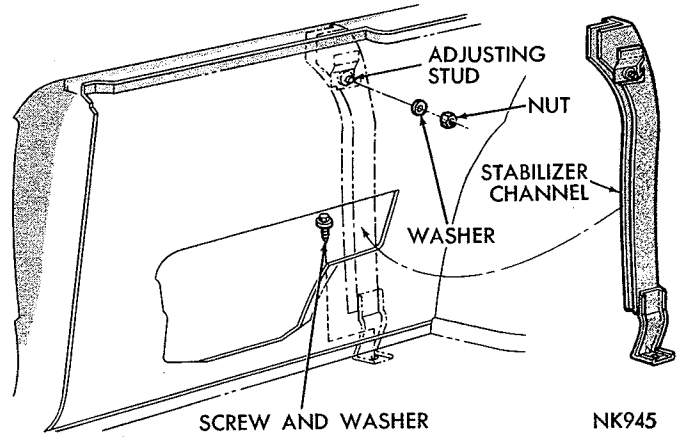


**Fig. 137—Quarter Window Stabilizer—Convertible**

MyMopar.com

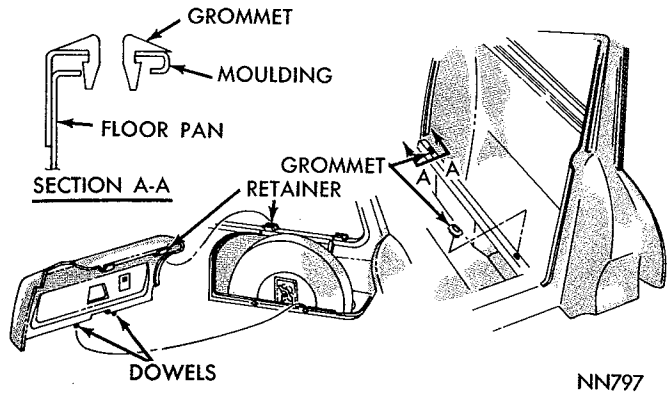


***Fig. 138—Spare Tire Cover***

weatherstrip. The attachment at the lower end permits in and out adjustment.

## Station Wagon

### Removal

(1) Pull spare tire cover handle outward to release retaining clips on cover from clips on inner wheelhouse panel (Fig. 138).

(2) Pull the bottom portion of the cover outward until dowels are clear of grommets and remove cover.

(3) Remove quarter window garnish mouldings.

(4) Remove front upper pillar glass and weatherstrip lock retainer screws and retainer (Fig. 139).

(5) Remove rear upper pillar glass and weatherstrip retainer screws and retainer.

(6) Remove glass and weatherstrip belt bar retainer screw and retainer.

(7) Remove roof side rail support retainer from quarter window area (Fig. 140).

(8) Remove quarter window and weatherstrip assembly from opening (Fig. 141) from inside vehicle.

(9) Remove weatherstrip from glass.

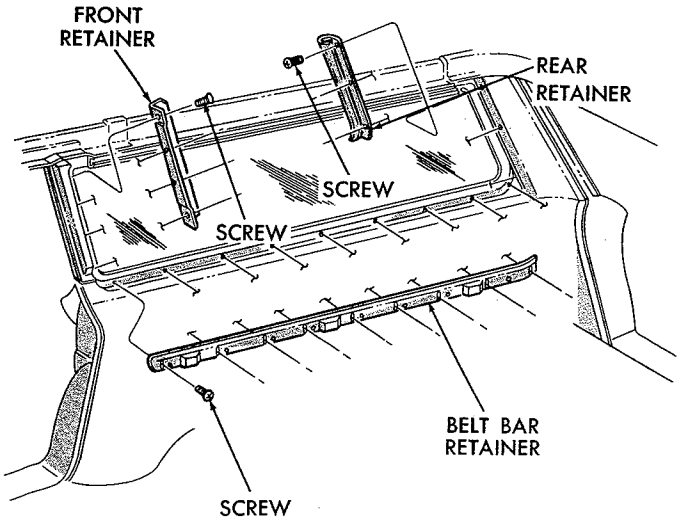


***Fig. 139—Pillar and Belt Bar Retainers***

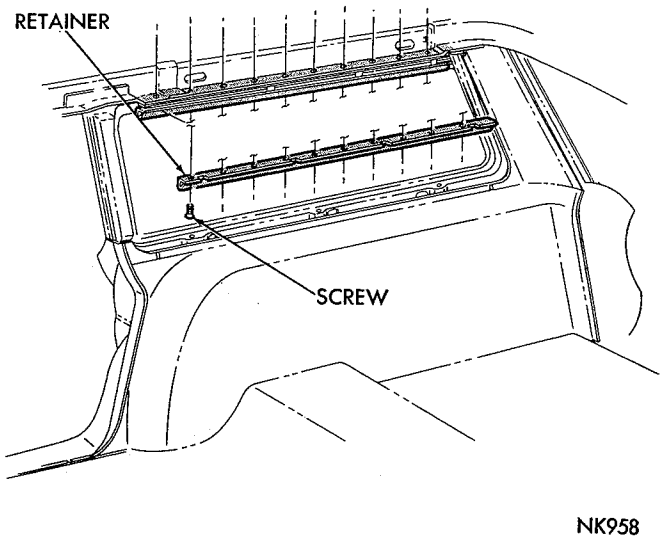


***Fig. 140—Quarter Window Retainers***

(10) Inspect the polyethylene seal.

### Installation

(1) Install the front, rear and lower polyethylene seals.

(2) Install weatherstrip on quarter glass.

(3) Position glass and weatherstrip assembly in window opening from inside vehicle (Fig. 141).

(4) Position roof side rail retainer (Fig. 140) to mating under surface of side rail support and install retaining screws.

(5) Position wheelhouse belt bar retainer to belt bar and install retaining screws (Fig. 139).

(6) Position rear pillar upper retainer on end of belt bar retainer and rear pillar. Install retaining screws.

(7) Position body lock upper front pillar retainer on end of belt bar retainer and pillar. Install retainer screws.

(8) Install garnish mouldings.

(9) Position spare tire cover dowels in grommets and push cover on retention clips (Fig. 138).

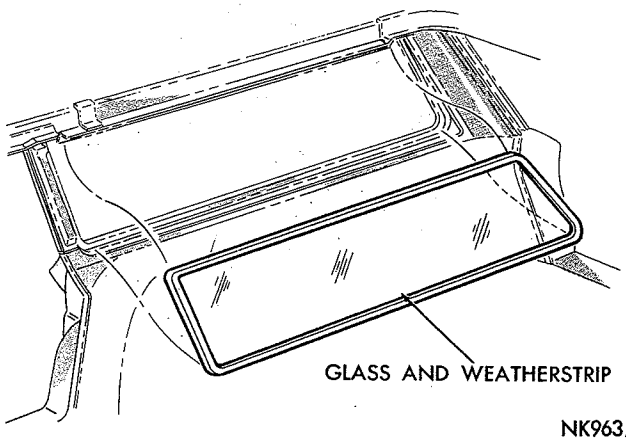


***Fig. 141—Quarter Window Installation***

MyMopar.com

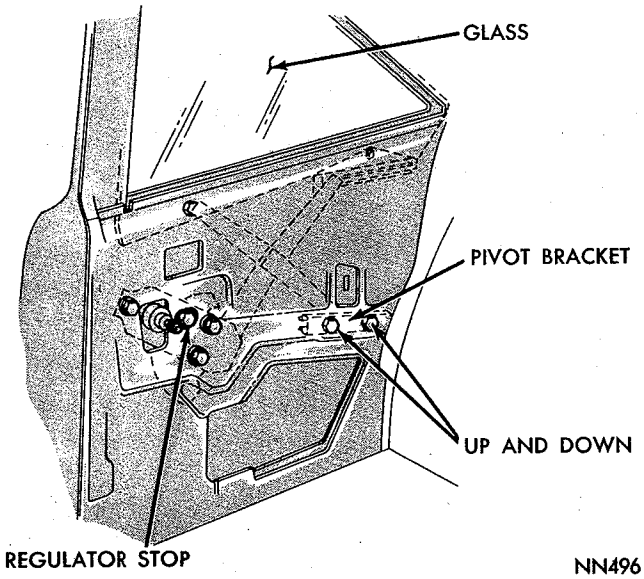


*Fig. 142—Quarter Window Adjustments—Belvedere Sedan*

## SEDAN MODELS—Belvedere

### *Adjustments*

(1) Raise window until top of glass is ½ inch below opening top frame.

(2) Adjust pivot bracket (Fig. 142) until top of glass is parallel to opening frame and tighten nuts.

(3) Lower window until rear lower edge of glass is approximately ¼ inch above the wheelhouse and tighten regulator down stop nut.

## GLASS REPLACEMENT

### *Removal*

(1) Remove clip attaching regulator front arm stud in bushing of glass (Fig. 143) and remove stud.

(2) Move glass rearward and disengage regulator rear arm roller from pivot bracket channel.

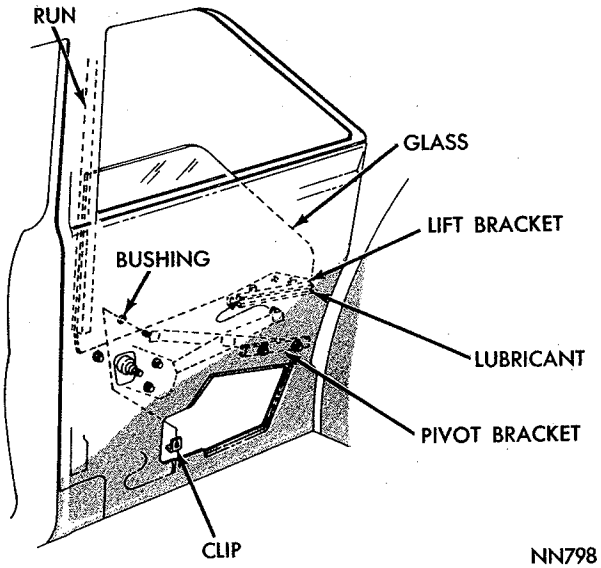


*Fig. 143—Quarter Window Replacement—Sedan*

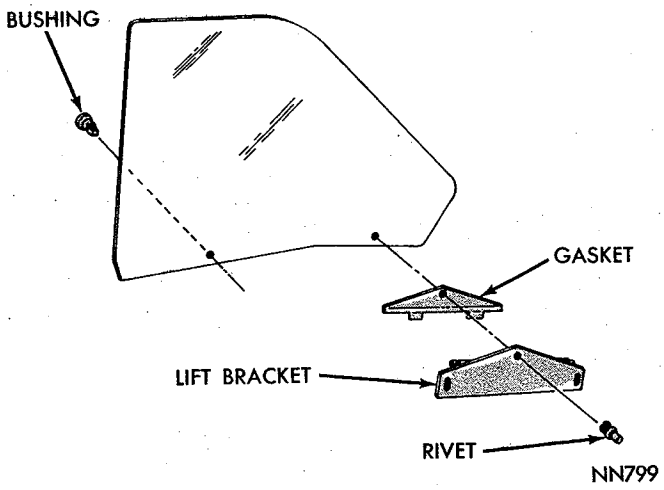


*Fig. 144—Glass Lift Bracket*

(3) Remove quarter window from panel.

(4) Remove lift bracket assembly from glass and front bushing from glass (Fig. 144).

### *Installation*

(1) Install bushing into front hole of glass.

(2) Install lift bracket assembly on glass.

(3) Apply lubricant to slide channel area of pivot bracket and lower glass into panel.

(4) Position lift bracket channel over regulator rear arm roller.

(5) Move glass forward into glass run and insert regulator front arm stud into bushing in glass.

(6) Install clip on regulator stud and adjust glass.

### *Regulator Assembly*

The regulator assembly is attached to the inner panel with screw and washer assemblies (Fig. 145).

### *Electric Regulator Motor*

The service procedures and tests for the regulator

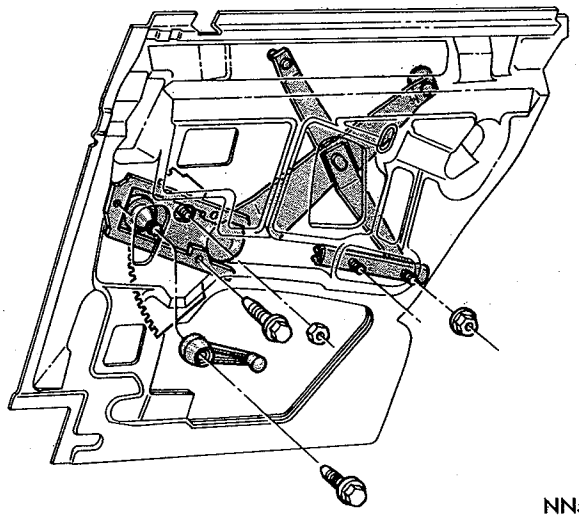


*Fig. 145—Quarter Window Regulators—Sedan*

MyMopar.com

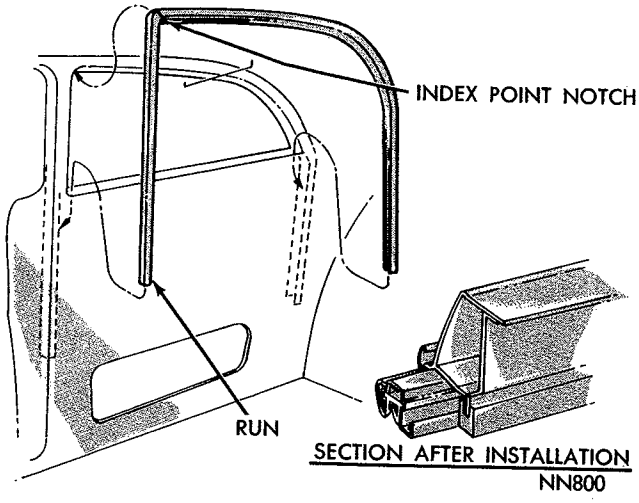


*Fig. 146—Glass Run—Sedan*

motor are the same as for those used on doors.

### Glass Run

The glass run (Fig. 146) is a press fit in the front channel and the window opening frame.

## HARDTOP MODELS (Belvedere-Satellite)

### Adjustments

(1) With door closed, adjust upper rear track (Fig. 147) until rear of glass lightly touches belt line weatherstrip. To move window in, turn sleeve nut clockwise; to move out, counterclockwise.

(2) Raise window seating top of glass against roof rail weatherstrip and front of window level with top of front door window.

(3) Adjust upper front track until front of window is aligned with rear of front door window. To move window in, turn sleeve nut clockwise, to move out, counterclockwise.

(4) Adjust lower front track until front of window is aligned rear of front door window at roof rail.

(5) Adjust pivot bracket until top of window is fully against and parallel to roof rail weatherstrip. To raise front of window, lower front of bracket, to lower, raise bracket.

(6) Move upper front track attachment forward and tighten when quarter window weatherstrip is against front door window.

(7) Tighten pivot bracket nuts.

(8) Loosen and position front and rear up stops against glass lower frame and tighten screws.

(9) Lower window until top of glass is even with or slightly below belt line outer panel.

(10) Turn lower rear track sleeve nut counterclockwise until its boss is against outboard side of inner panel. Tighten nut.

(11) Position and tighten regulator stop against regulator sector stop.

(12) Position and tighten down stop against bumper.

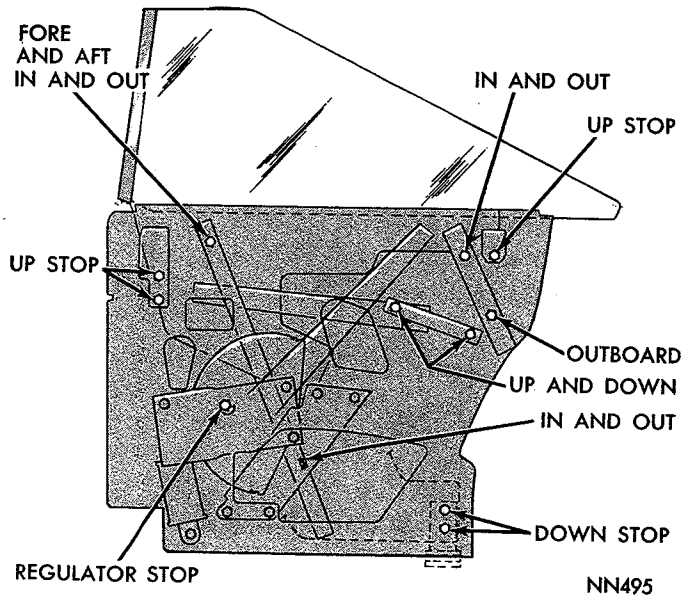


*Fig. 147—Quarter Window Adjustments—Hardtop*

## GLASS REPLACEMENT

### Removal

(1) Remove retainers attaching regulator arm studs to glass lower frame (Fig. 148).

(2) Support window and remove regulator studs from lower frame.

(3) Remove rollers from slots in glass lower frame.

(4) Remove glass from quarter panel.

(5) Inspect front and rear roller tracks for damage or excessive wear.

### Installation

(1) Apply lubricant to slide areas of lower glass

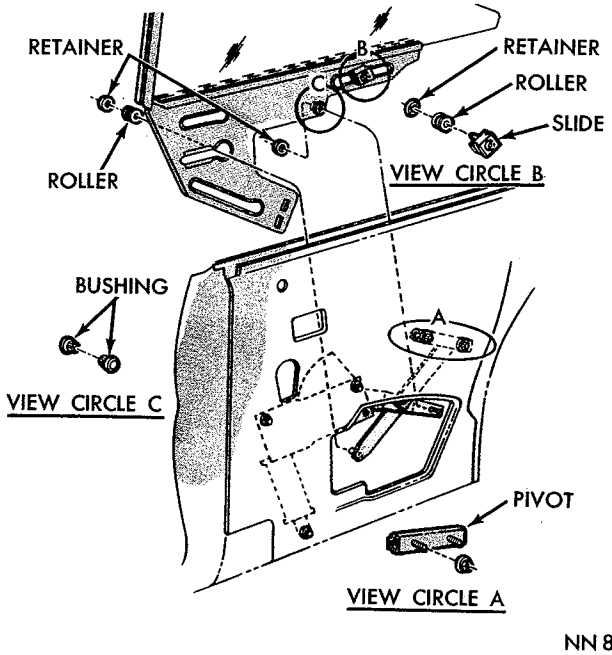


*Fig. 148—Quarter Window Replacement—Hardtop*

MyMopar.com

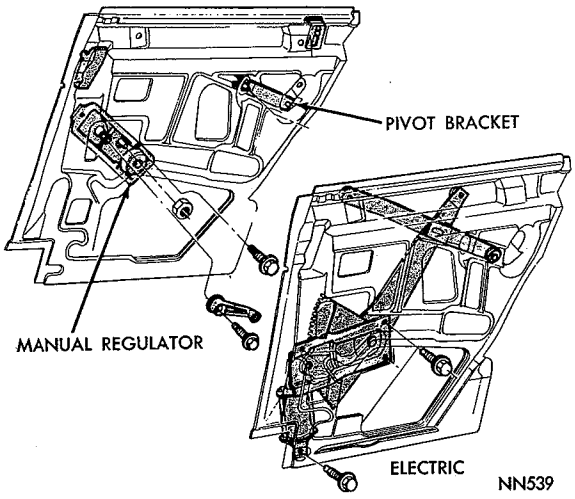


*Fig. 149—Quarter Window Regulator—Hardtop*

frame.

(2) Position and support window in quarter panel.

(3) Insert roller assemblies in glass lower frame.

(4) Position regulator arm studs in rollers and bushings and install retainers.

(5) Adjust quarter window.

### Regulator Assembly

The regulator assembly (Fig. 149) is attached to the inner panel with screw and washer assemblies. The regulator arm studs are retained in the glass lower frame with retainers. Lubricate the regulator tooth contact area approximately ½ inch wide along the entire length of the arc on the outboard side of sector and to front and rear arm roller studs.

### Electric Regulator Motor

Service procedures and tests for the electric regulator motor are the same as outlined for those used on door assemblies.

## FRONT TRACK AND BRACE

### Removal

(1) Remove screws and washers attaching front track brace (Fig. 150) to inner panel and front track and remove brace.

(2) Remove nut and washer attaching front track upper end to the inner panel.

(3) Remove front track rollers and remove front track.

### Installation

(1) Position front track into panel and insert sleeve nut at top of track into inner panel opening.

(2) Install sleeve nut lockwasher and nut, do not tighten.

(3) Position the bracket and guide assemblies (Fig. 150) onto bottom of track and slide up into position into forward upper and lower slots of glass lower frame.

(4) Position front track brace in panel and install attaching screws loosely.

(5) Attach brace to front roller track and adjust glass.

### Rear Track

The rear track (Fig. 151) is positioned over the slide in rear slot of glass lower frame and the sleeve nuts are inserted into the openings in inner panel. Lockwashers and nuts are used to retain the track on the inner panel.

## CONVERTIBLE MODELS—Belvedere-Satellite

### Adjustments

Procedures for Convertible quarter window adjustments (Fig. 152) are the same as for Hardtop Models with the following 3 exceptions.

(1) With door closed lower quarter window ¼ way.

(2) Adjust upper stabilizer attachement (Fig. 153) until rear of window lightly touches belt line weatherstrip and tighten nut.

(3) Lower window until top of glass is even with or slightly below belt line outer panel. Allow glass to set lower stabilizer attachment in-out position and tighten

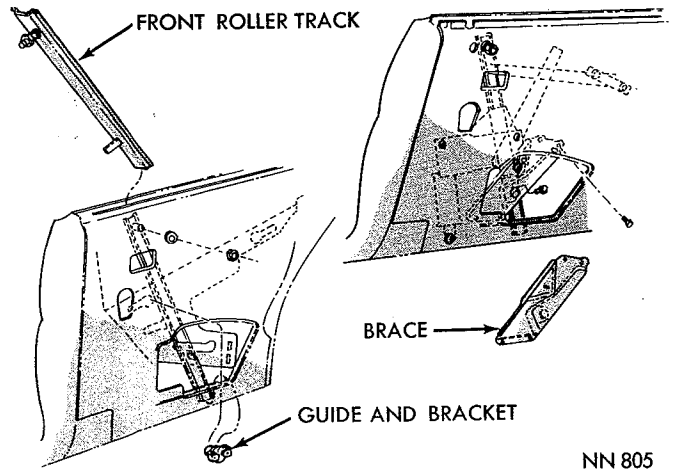


*Fig. 150—Quarter Window Front Track—Hardtop*

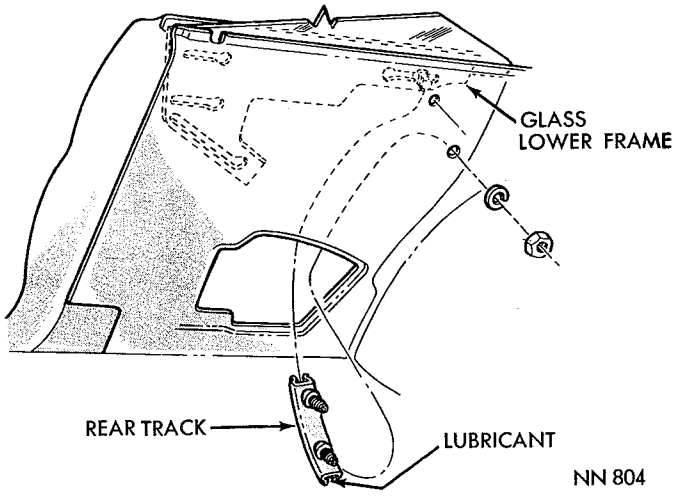


*Fig. 151—Quarter Window Rear Track—Hardtop*

MyMopar.com

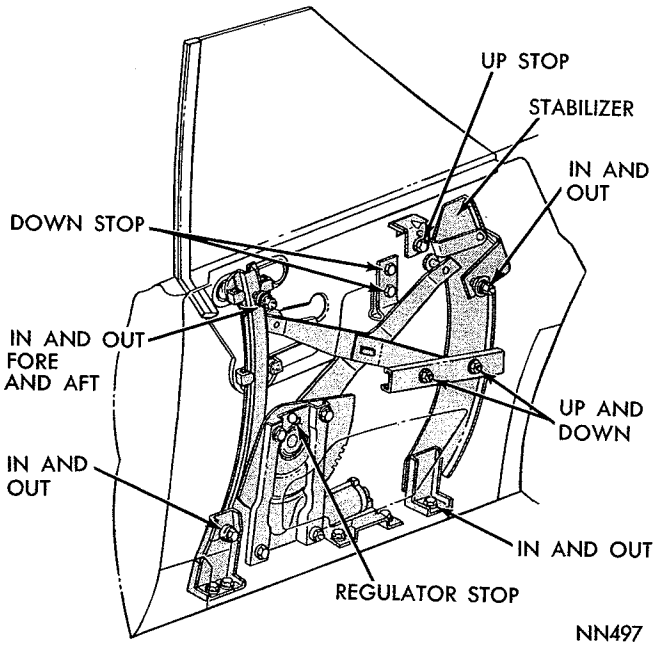


***Fig. 152—Quarter Window Adjustments—Convertible***

screw.

## GLASS REPLACEMENT

### *Removal*

(1) Remove the front track and roller assemblies (Fig. 154).
(2) Remove regulator arm stud retainers and studs from glass lower frame.
(3) Remove roller from glass frame center slot.
(4) Raise glass and disengage from rear stabilizer.
(5) Remove glass and frame from panel.
(6) Inspect slide areas and roller assemblies.

### *Installation*

(1) Lubricate slide areas of glass lower frame.
(2) Lower glass and frame into panel and onto rear

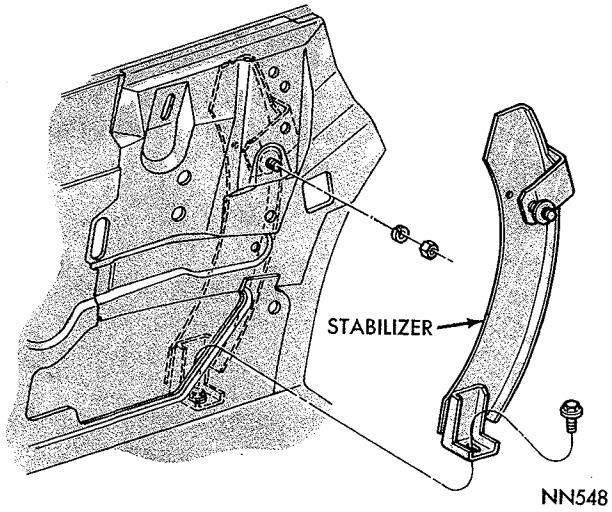


***Fig. 153—Quarter Window Stabilizer—Convertible***

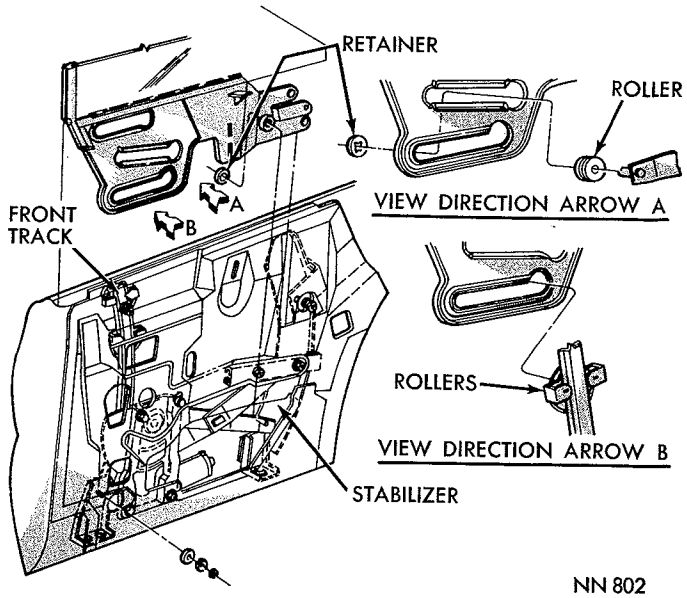


***Fig. 154—Quarter Window Replacement—Convertible***

stabilizer.
(3) Lower glass to regulator arm studs and insert studs into rollers and bushings in glass lower frame.
(4) Install retainers on regulator arm studs.
(5) Install front track and roller assemblies.
(6) Adjust quarter window.

### *Regulator Assembly*

The regulator assembly (Fig. 155) is attached to the inner panel with screw and washer assemblies. The replacement procedures are the same as those outlined for Hardtop models.

### *Electric Regulator Motor*

Service procedures and tests for the electric regulator motor are the same as those for the doors.

## FRONT TRACK AND BRACE

### *Removal*

(1) Remove screws and washers attaching front

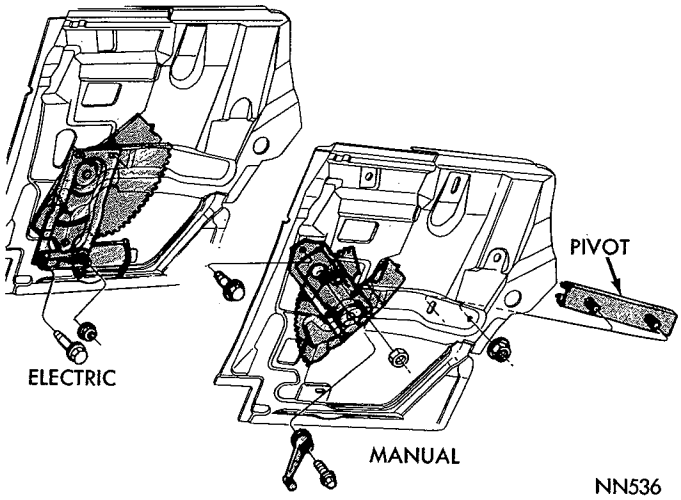


***Fig. 155—Quarter Window Regulator—Convertible***

MyMopar.com

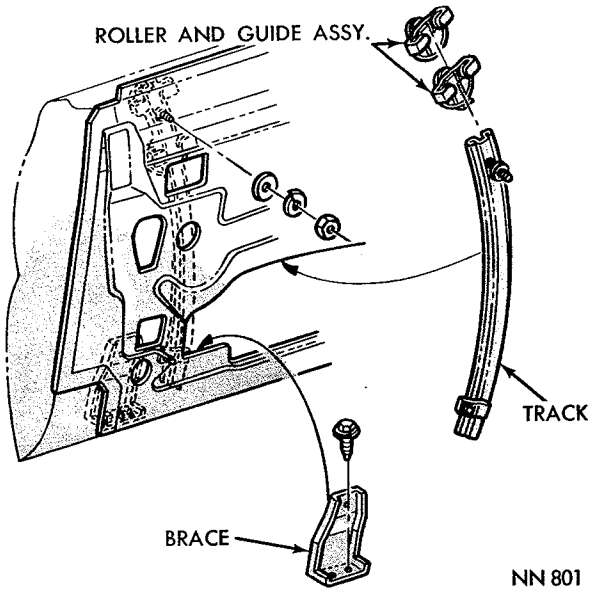


*Fig. 156—Quarter Window Front Track—Convertible*

track brace (Fig. 156) to inner panel and track.

(2) Remove nut and washer attaching upper end of track to the inner panel.

(3) Remove the front track from roller assemblies and remove from panel.

(4) Remove roller assemblies from glass lower slide.

(5) Inspect rollers and front track slide area.

### Installation

(1) Lubricate slide areas of glass lower frame slot slide areas and slide areas of front track.

(2) Position front track lower brace in panel and to attaching holes in side sill outer panel reinforcement.

(3) Install attaching screws and washers loosely.

(4) Install roller assemblies on front track and position assembly in panel.

(5) Insert sleeve nut on track upper stud in attaching hole in inner panel.

(6) Install nut and washer loosely.

(7) Install front track brace attaching screws loosely.

(8) Adjust quarter window.

### Stabilizer

The quarter window stabilizer (Fig. 153) is attached to the inner panel at the upper end and to the side sill outer panel and reinforcement at the lower end. The adjusting stud at the upper end allows "in and out" movement to position glass against out belt weatherstrip. The attachment at the lower end also permits "in and out" movement.

## BELVEDERE MODELS

### Removal

(1) Unlock weatherstrip (Fig. 157) by prying lip of weatherstrip apart, inserting a fibre wedge and with a slight twist to the wedge, move tool completely

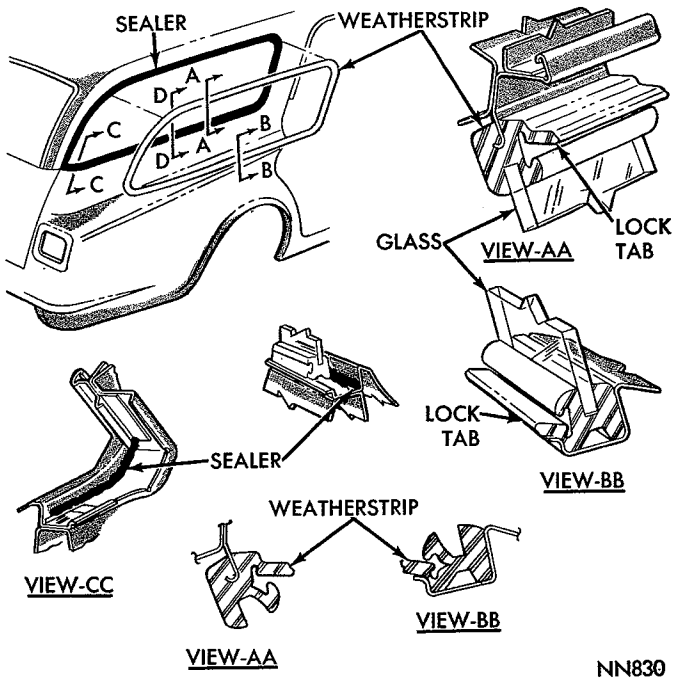


*Fig. 157—Station Wagon Quarter Window*

around weatherstrip forcing the locking tab out.

(2) Carefully loosen weatherstrip from glass on inside and outside surfaces.

(3) With an assistant supporting glass on the outside, force glass out of weatherstrip from inside the vehicle.

(4) Inspect weatherstrip for damage.

### Installation

(1) When replacing the weatherstrip, make certain all foreign material is removed from fence area.

(2) Apply sealer in fence and glass groove areas of weatherstrip.

(3) Position weatherstrip on fence, making certain it is fully seated.

(4) Position glass on weatherstrip and using a fibre tool, force lip of weatherstrip over glass edges.

(5) Pound glass with the palm of hand in an upward and downward motion to seat it fully.

(6) Using a fibre tool, force locking tab into weatherstrip.

## VALIANT SEDAN MODELS

### Adjustments

(1) The front glass run channel (Fig. 158) should be tightened before adjusting glass.

(2) Raise window until top of glass is ⅛ inch below window opening frame.

(3) Adjust regulator so top of glass is parallel to window opening frame and tighten screws.

(4) Lower window until rear of glass is approximately ¼ inch above wheelhouse and tighten the down stop on regulator plate.

MyMopar.com

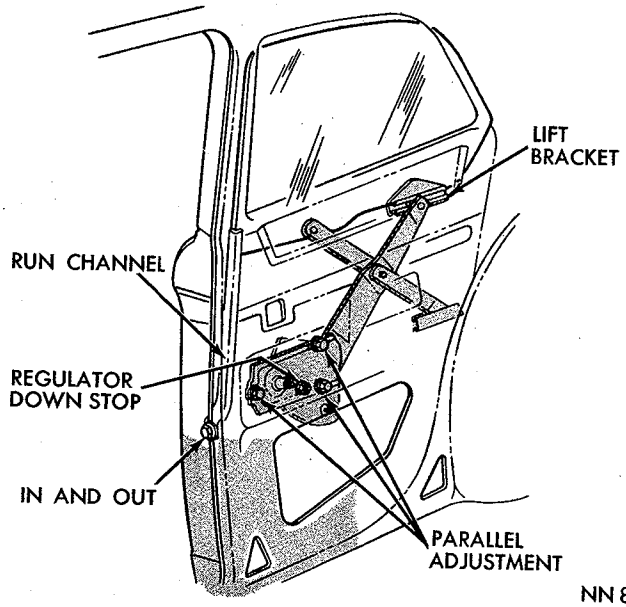


*Fig. 158—Quarter Window Adjustments—Valiant Sedan*

## GLASS REPLACEMENT

### *Removal*

(1) Lower glass and reaching through front access opening, remove clip from regulator arm stud pin (Fig. 159).

(2) Pull regulator arm stud out of bushing.

(3) Push up on front of glass while holding arm stud pin, until front of glass is clear of stud.

(4) Raise and rotate front of glass until lift arm bracket clears regulator arm stud.

(5) Pull glass up and out.

### *Installation*

(1) If glass is to be replaced, remove lift bracket (Fig. 160) and attach it to new glass.

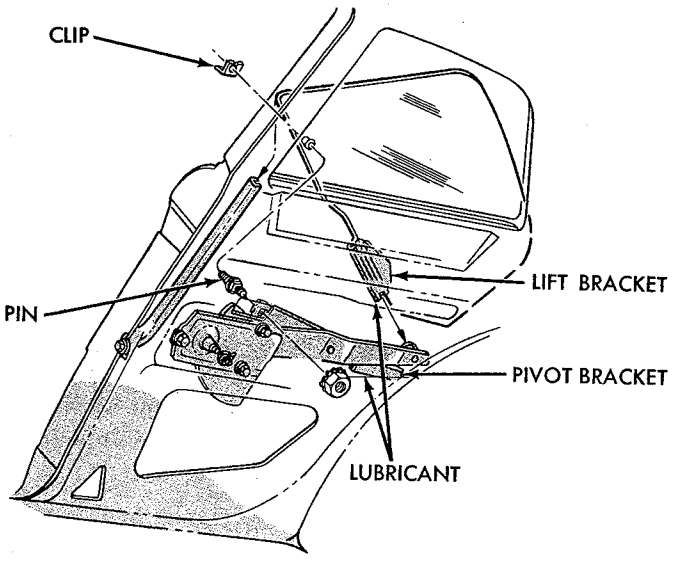


*Fig. 159—Quarter Window Replacement—Sedan*

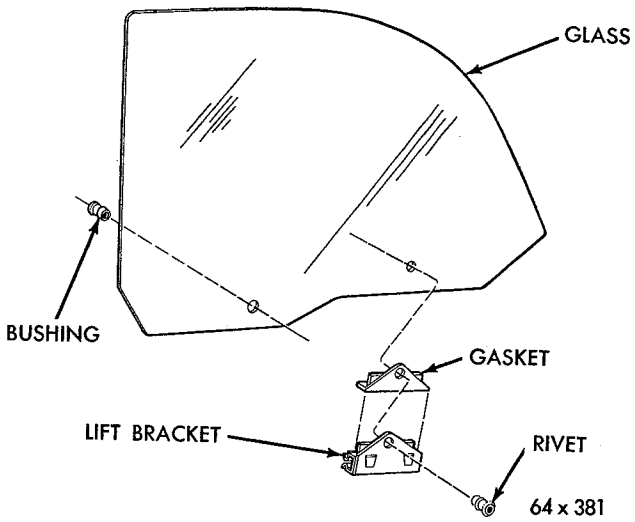


*Fig. 160—Glass Lift Bracket—Sedan*

(2) Roll regulator down until front regulator stud is accessible at front access opening.

(3) Lower quarter glass and bracket, rear edge first into quarter panel opening.

(4) Reach through the access opening and position the lift bracket onto the regulator rear arm stud.

(5) Rotate the glass into rear channel and move the glass forward into the front channel.

(6) Align and position front arm stud into bushing, secure with clip and adjust glass.

### *Regulator Assembly*

The regulator assembly (Fig. 161) is attached to the inner panel with screw and washer assemblies. Inspect rollers on regulator studs and apply lubricant to the slide area of the pivot channel prior to installing regulator.

### *Run Channels*

The glass run channels (Fig. 162) are attached with screw and washer assemblies. The rear channel support is attached to the inside panel.

## HARDTOP MODELS

### *Adjustments—All Except Barracuda*

(1) Raise window until the glass is parallel to the

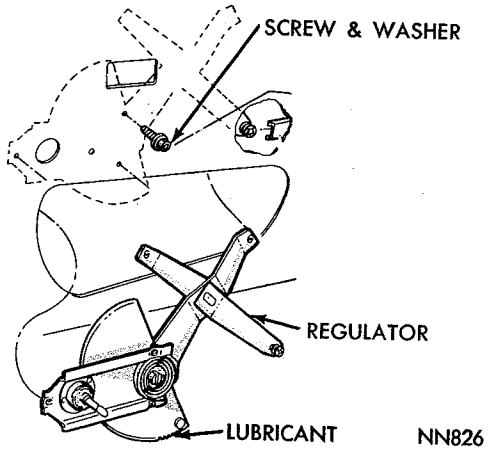


*Fig. 161—Regulator Assembly—Sedan*

MyMopar.com

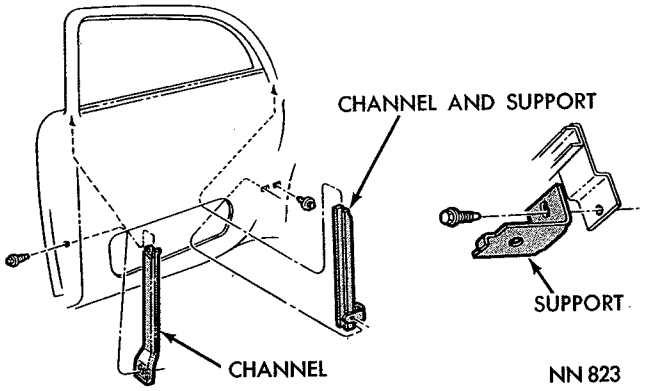


*Fig. 162—Glass Run Channels—Sedan*

rear of door glass.

(2) Position up stop (Fig. 163) down against regulator arm and tighten securely in place.

(3) Roll glass 2/3 way down, loosen screw at front of quarter window, move glass assembly on hinge upward and tighten screw.

(4) Raise window and inspect seal between rear edge of door glass and front edge of quarter window.

(5) With door open, loosen screws at front of quarter panel top edge and move glass upward until firmly seated into weatherstrip.

(6) Close door and inspect fore and aft seal.

(7) Lower window until front of glass is even with or slightly below the belt line. Tighten the down stop on regulator plate.

## BARRACUDA MODELS

### *Adjustments*

(1) Raise quarter window to within 1 inch of roof rail weatherstrip and adjust upper guide channel attachment so rear of glass lightly touches weatherstrip

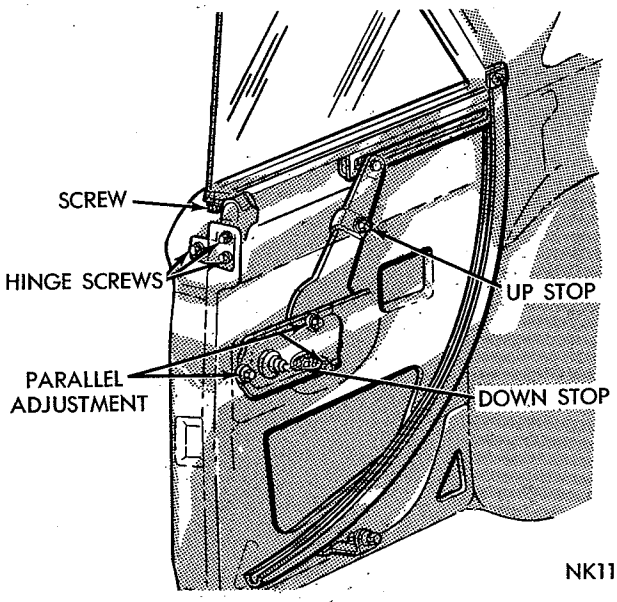


*Fig. 163—Quarter Window Adjustments—Valiant Hardtop*

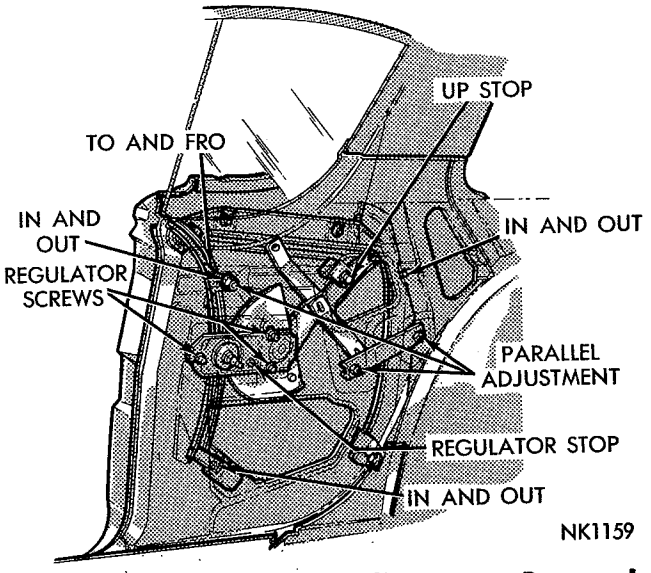


*Fig. 164—Quarter Window Adjustments—Barracuda*

just above belt line.

(2) Adjust upper front track (Fig. 164) so front of glass is aligned with rear of front door glass at belt line. To move glass inboard turn sleeve nut clockwise and to move outboard, turn sleeve nut counterclockwise.

(3) Adjust lower front track so front of glass is aligned with rear of door glass at the top. To move glass inboard move track out and to move outboard move track in.

(4) Raise window and adjust regulator and pivot bracket so front edge of glass is parallel to rear of door glass.

(5) Adjust front upper track attachment so weatherstrip of quarter glass is forward against door glass the top of quarter glass is flush with top of door glass and parallel to roof rail weatherstrip.

(6) Adjust up stop down against regulator arm.

(7) Lower window until top of glass is even with or slightly below belt line of outside panel.

(8) Adjust stop on regulator plate against stop on regulator sector.

## GLASS REPLACEMENT

### *Removal—Except Barracuda*

(1) With glass lowered two-thirds of way, remove screw and washer from hinge assembly (Fig. 165).

(2) Lower glass fully and remove spring nut and washer attaching regulator stud to glass lower channel.

(3) Remove regulator stud from lower channel.

(4) Remove glass and lower channel assembly.

### *Installation*

(1) Position glass into quarter panel.

(2) With regulator in down position, insert regulator arm stud into glass lower channel and install washer and spring nut.

MyMopar.com

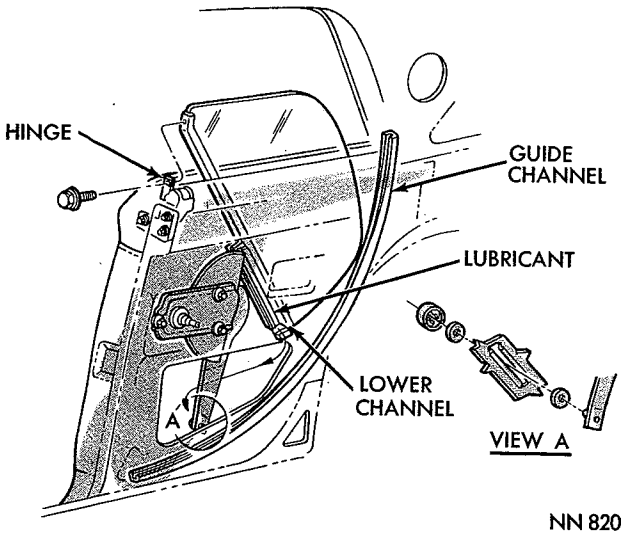


**Fig. 165—Quarter Window Replacement—Valiant Hardtop**

(3) Raise glass one-third and install hinge to glass lower channel.

(4) Adjust quarter window.

### Removal—Barracuda Models

(1) Remove screw, washer, grommet and spacer attaching glass to frame at front attachment (Fig. 166).

(2) Remove screw, washer, grommet and spacer attaching glass to frame at rear attachment through access opening at top rear portion of inner panel.

(3) Remove glass from quarter panel.

### Installation

(1) Apply lubricant to the sliding surfaces of the quarter window lower frame.

(2) Assemble grommets and spacers to screw and washer assemblies.

(3) Run the regulator up until glass lower frame is aligned with access opening at top rear section of inner panel.

(4) Position glass into quarter panel and install one screw and washer, spacer and grommet through glass and into lower frame.

(5) Lower glass and install screw and washer, spacer and grommet into glass front attaching hole and into lower frame.

(6) Adjust quarter window.

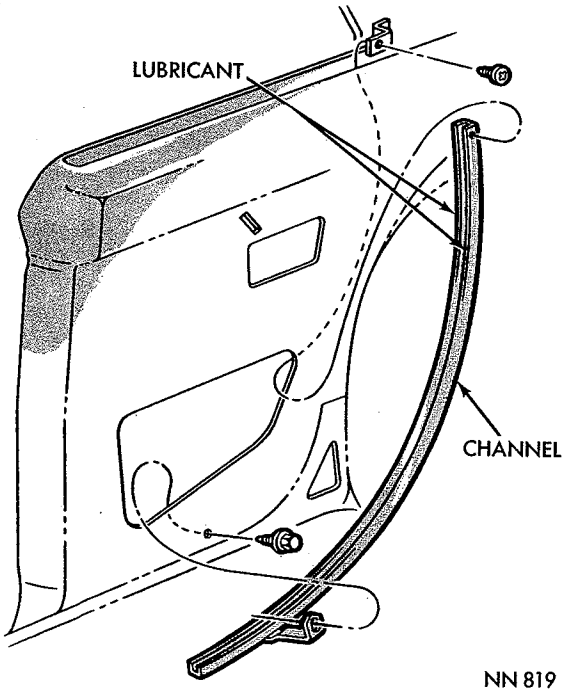


**Fig. 166—Quarter Window Guide Channel—Valiant Hardtop**

### Regulator Assembly

Service procedures for the hardtop quarter window regulator are the same as sedan models.

### Guide Channel—Valiant Models

The quarter window guide channel (Fig. 166) is attached to the inner panel at the lower end and to the quarter window outside finish moulding assembly at the top end. Lubricate the slide area of channel before installing.

### Barracuda Models

The guide channel and bracket assembly (Fig. 167) is attached to the wheelhouse roof side outer rail extension support at the upper end through the upper rear access hole. The lower end is attached to the inner panel channel support.

## CONVERTIBLE MODELS

### Adjustments

(1) With the door closed, run window approximately three-fourths way up.

(2) Adjust upper stabilizer (Fig. 168) so rear of

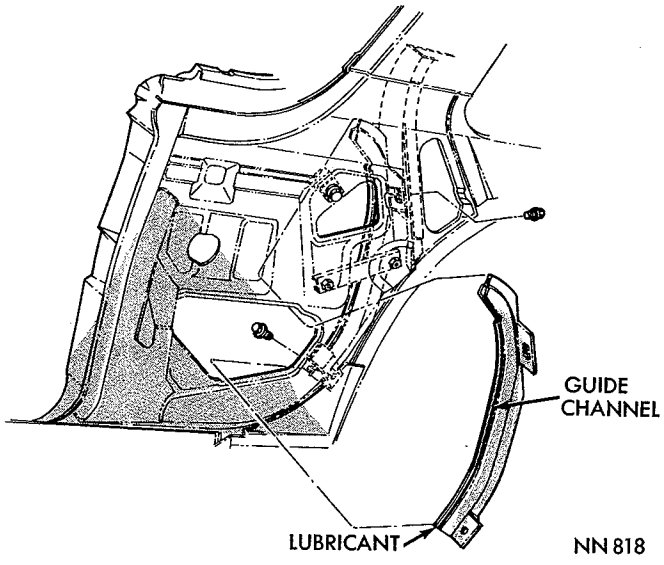


**Fig. 167—Quarter Window Guide Channel—Barracuda**

MyMopar.com

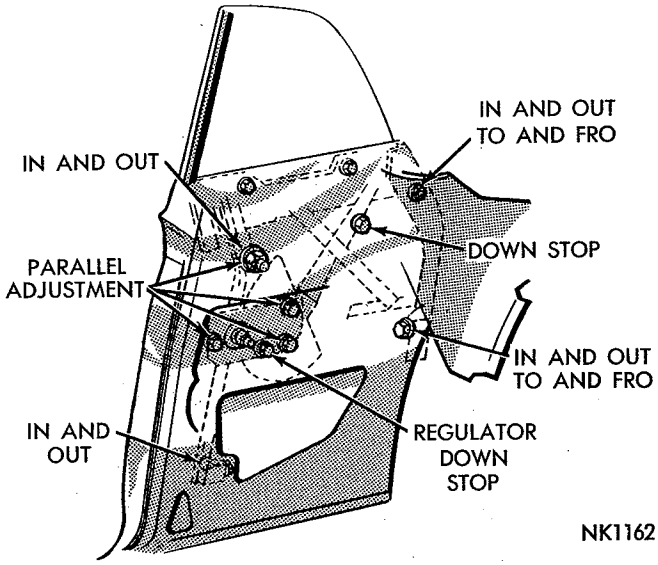


**Fig. 168—Quarter Window Adjustments—Valiant Convertible**

glass touches lightly on the outer belt weatherstrip.

(3) Run the window up fully so the front of the glass is flush with top of front door glass and lower frame is parallel to belt line of quarter outside panel.

(4) Adjust upper track attachment so front of glass is aligned with rear of door glass at belt line. To move window in, turn the sleeve nut clockwise, and to move window out, turn sleeve nut counterclockwise.

(5) Adjust lower track attachment so front of glass is aligned with rear of door glass at the top. To move window in, turn sleeve nut counterclockwise and to move window out, turn sleeve nut clockwise.

(6) Adjust the pivot bracket so window is parallel to rear of door window at the front and bottom is parallel to quarter outside panel at belt line. Lower pivot bracket to raise glass, and raise bracket to lower glass.

(7) Move upper track attachment forward so weatherstrip is against front door glass.

(8) Position up stop down against rear arm of regulator.

(9) Run window down so top of glass is level with or slightly below belt line of quarter outside panel.

(10) Adjust lower stabilizer attachment in or out as necessary.

(11) Position stop on regulator plate against stop on regulator sector.

(12) Adjust center support inboard against inside panel.

## GLASS REPLACEMENT

### Removal

(1) Run window down and remove screw and washer assemblies attaching glass to lower frame assembly (Fig. 169).

(2) Run window up to approximately 3 inches below belt line and remove glass from quarter panel.

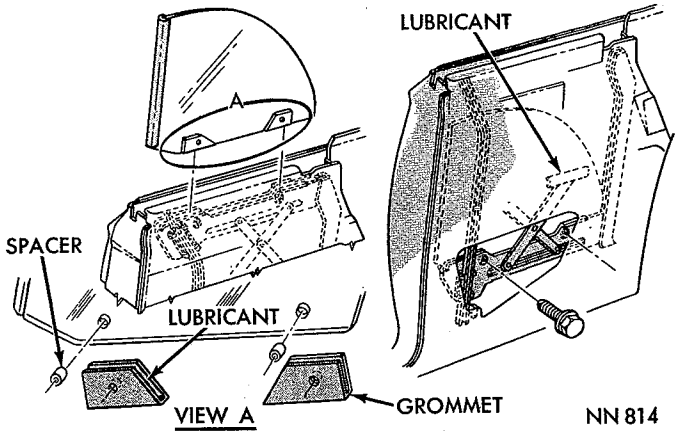


**Fig. 169—Quarter Window Glass Replacement—Convertible**

### Installation

(1) Apply lubricant to regulator arm sliding surfaces of pivot bracket.

(2) Run window lower frame up to approximately three inches below belt line.

(3) Position glass into quarter panel and seat glass in lower frame.

(4) Run glass and frame assembly down and align holes in glass with holes in lower frame.

(5) Install retaining screw and washer assemblies.

(6) Adjust quarter window.

### Regulator Assembly

The regulators (Fig. 170) are attached to the quarter inside panel with screw and washer assemblies. When installing a regulator, lubricate the tooth contact area approximately ½ inch wide along the entire length of the arc on the outboard side of the sector and studs on the front and rear studs.

### Front Track

The front track (Fig. 170) is attached to the inner panel at the top end and to a support at the lower

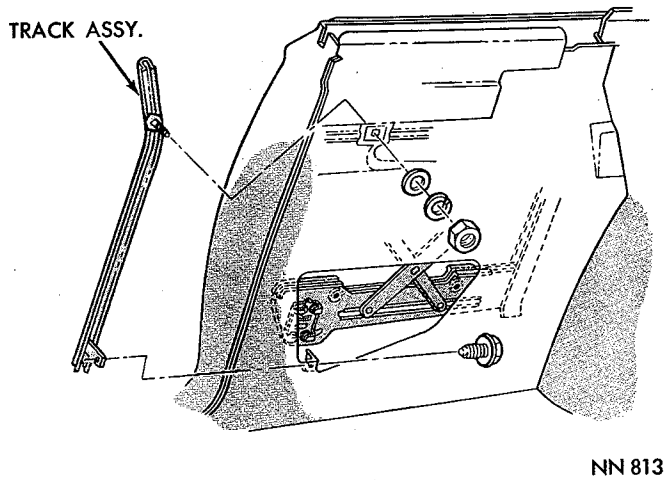


**Fig. 170—Quarter Window Front Roller Track—Convertible**

MyMopar.com

end. The upper attachment permits "in and out" adjustment and the lower end permits "fore and aft" and "in and out" adjustments.

### Stabilizer

The rear stabilizer (Fig. 171) permits "in and out" adjustment at the top end which is attached to the inner panel. The lower attachment is also adjustable for "in and out" and "fore and aft."

## STATION WAGON—VALIANT

### Removal

(1) Remove the two mylar locking strip caps (Fig. 172) covering ends of locking strip.

(2) Using a wedge shaped fibre tool, remove the mylar locking strips from weatherstrip.

(3) Using a wedge shaped fibre tool, loosen weatherstrip from quarter window.

(4) With an assistant supporting glass on the outside, force glass out of weatherstrip from inside the vehicle.

### Installation

(1) Remove all old sealer and cement from the quarter window fence and from the original weatherstrip if it is to be reinstalled.

(2) Apply sealer to fence groove in weatherstrip and position weatherstrip on fence.

(3) Position glass on weatherstrip and using a fibre tool, seat glass in weatherstrip.

(4) Apply sealer to area between glass and weatherstrip.

(5) Install locking strips, starting at the lower rear corner.

(6) Make certain locking strip is fully seated and install caps over ends of the locking strip.

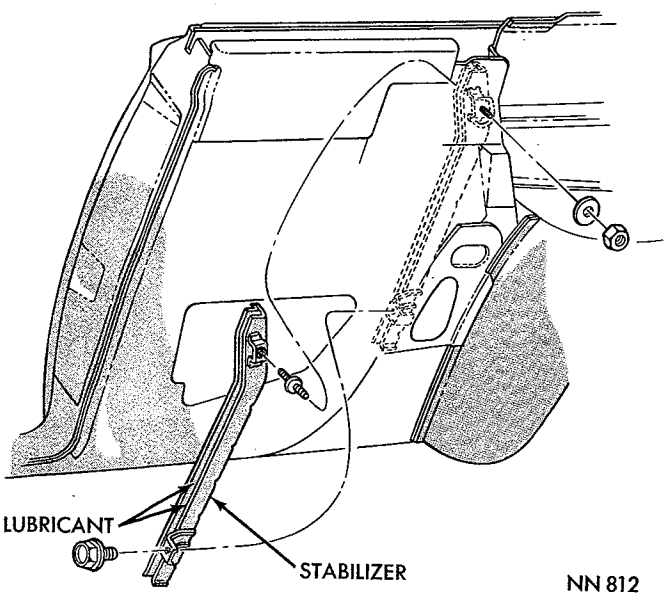


*Fig. 171—Quarter Window Stabilizer—Convertible*

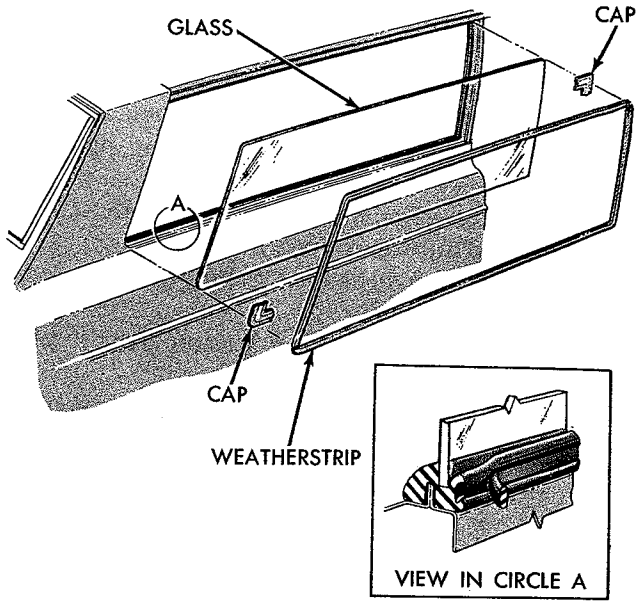


*Fig. 172—Station Wagon Quarter Window*

## TAIL GATE

## ALIGNMENT

Vertical adjustment and in and out adjustment are made at the hinge plate. In and out alignment of the top of the tail gate is adjusted by moving the striker in or out to permit ease of entry of the tail gate glass into the upper run channel. Lateral adjustment to center the tail gate in the body opening is controlled at the hinge (Fig. 173).

## REPLACEMENT

### Removal

**On cars with an electric window, remove trim panel and disconnect terminals at control switch on left**

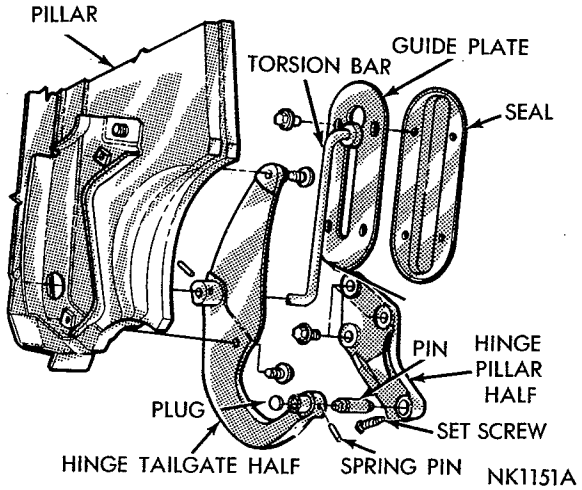


*Fig. 173—Tail Gate Alignment*

MyMopar.com

**edge of tail gate.**

(1) Remove rear bumper face bar to enable tail gate to be removed down and out of body opening.

(2) Remove check arm and torsion bar guide from pillar guide plates.

(3) Support tail gate on jacks or stands.

(4) Loosen hinge pivot pin locking screws (Fig. 173).

(5) Use a pencil and outline hinge plate position on pillar post for future assembly.

(6) Remove hinge plate attaching bolts from pillar post (Fig. 173).

(7) Slide hinge plate and torsion bar in through guide toward center of tail gate.

(8) Lower tail gate down and out of body opening.

### *Installation*

(1) With torsion bar and hinge plates pushed in toward center of tail gate, engage hinge plates into lower opening of body.

(2) Attach hinge plate attaching bolts into pillar posts and locate hinge plates in relation to previous marked positions.

(3) Tighten attaching bolts firmly enough to hold position and inspect alignment.

(4) Close tail gate and center in opening.

(5) Attach torsion bar bracket to pillar post.

(6) Open tail gate and tighten locking screws on hinge pivot pin.

(7) Connect wires to control switch and install trim panel.

(8) Operate tail gate window and inspect alignment.

(9) Install bumper face bar.

## TRIM PANEL

The tail gate trim panel is attached with metal screws. Clean all foreign material from the seating area of the trim panel before installing.

## LOCK

To replace the lock assembly (Fig. 174) remove

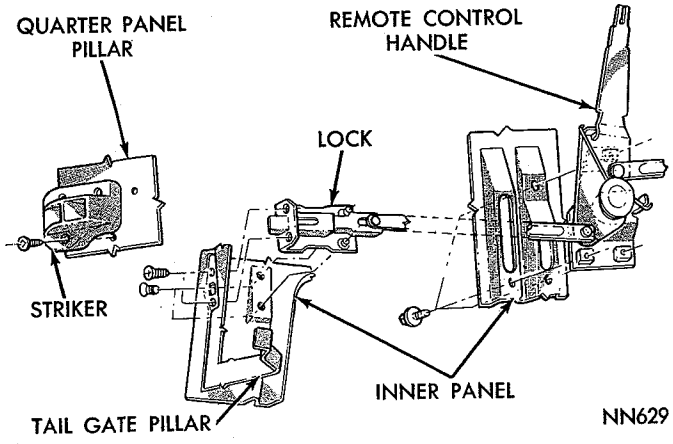


***Fig. 174—Tail Gate Lock—Fury***

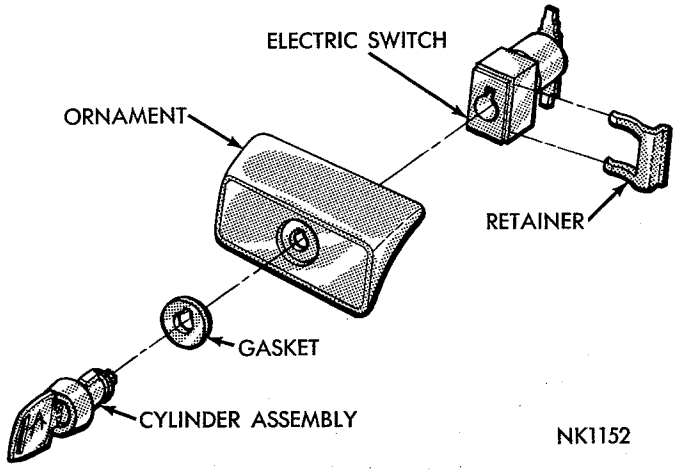


***Fig. 175—Tail Gate Lock Cylinder***

trim panel and raise glass. The lock assembly is retained on tail gate by screws accessible at end of tail gate.

### *Lock Cylinder*

To replace the lock cylinder (Fig. 175) it is first necessary to remove the glass and regulator to gain access to the lock cylinder retainer (horseshoe type).

## HANDLES

### *Adjustment*

### *Remote Control*

Tail gate inside handle (Fig. 176) adjustment can be made by removing the plug located near the rotor in the lock facing of the tail gate. Loosen the hex bolt in the lock assembly and adjust the ratchet levers to allow the lock rotor to spin freely when the actuator rod is in the open position. Tighten the hex bolt after the adjustment has been made. This adjustment must be made on both sides of the tail gate.

### *Regulator Handle*

With the tail gate handle in the unlocked position

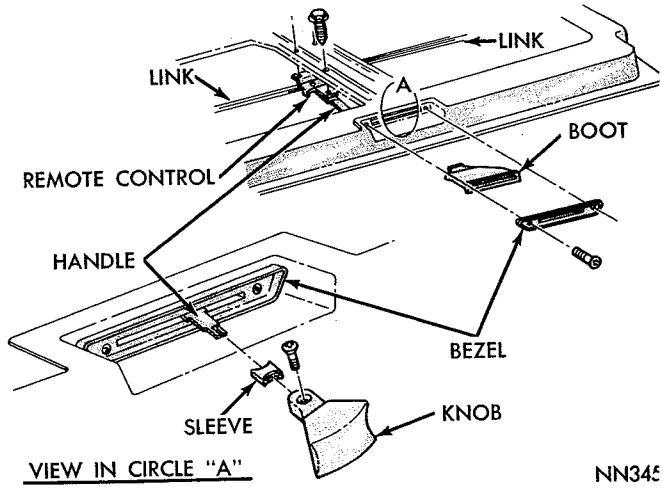


***Fig. 176—Tail Gate Remote Control Handle—Fury - Belvedere***

MyMopar.com

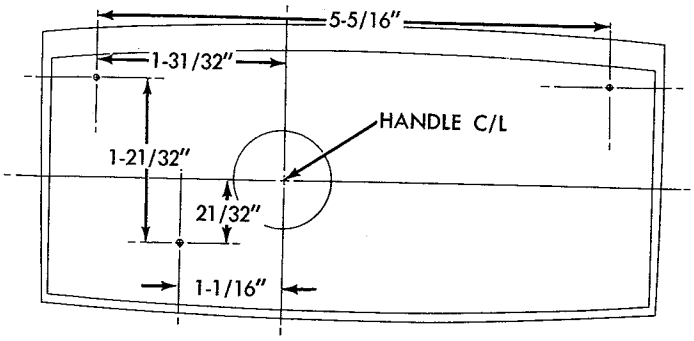


*Fig. 177—Tail Gate Handle Stud Locations—Fury*

remove the tail gate inner panel and remove the three nuts attaching the handle to the door.

To remove a handle which is inoperative and the vehicle is fully loaded, prohibiting access to the tail gate inner panel, it will be necessary to remove the three mounting studs from the handle by drilling through the handle. Refer to Figures 177, 178 and 179 for the location of the drilling points.

## GLASS

### Adjustments

Refer to Figure 180 for the tail gate glass adjusting points.

(1) Remove tail gate trim panel and loosen regulator and run channel attaching screws and nuts.

(2) With tail gate open, adjust upper attachments of lower run channels so glass lightly touches outer belt weatherstrip.

(3) From inside vehicle and with tail gate closed, run glass ½ way closed.

(4) Adjust upper run channel for proper alignment with glass and tighten two top screws.

(5) Tighten lower nut on bottom of lower run channels.

(6) Run glass up to approximately ⅛ inch below glass run.

(7) Adjust regulator so top of glass is parallel to glass run. To raise or lower left or right side of glass, raise or lower regulator on that side.

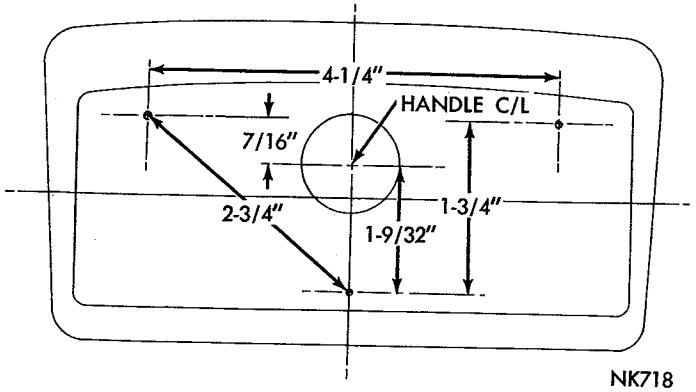


*Fig. 178—Tail Gate Handle Stud Locations—Belvedere*

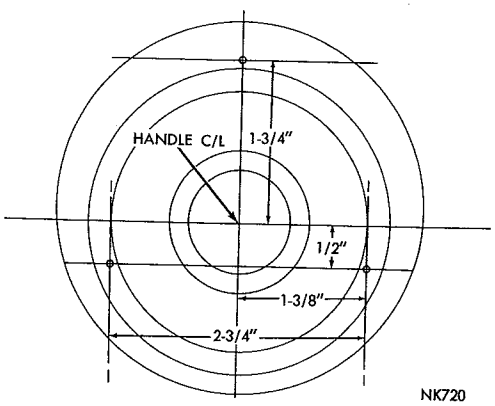


*Fig. 179—Tail Gate Handle Stud Locations—Valiant*

### Replacement

### Removal

(1) With tail gate open, remove trim panel.

(2) Remove retainers (Fig. 181) from ends of regulator arm studs.

(3) Remove regulator arm studs from rollers in glass lower frame.

(4) Remove tail gate glass assembly from tail gate.

(5) Remove rollers from glass lower frame.

(6) Remove washers, spacers and screws attaching glass lower frame and weatherstrip to glass (Fig. 182) and remove frame and weatherstrip.

### Installation

(1) Position outer belt weatherstrip on lower glass frame.

(2) Position tail gate glass on weatherstrip and lower frame, and install the washers, spacers and retaining screws.

(3) Apply lubricant to regulator arm studs and to glass lower frame studs.

(4) Position rollers into slots of glass lower frame.

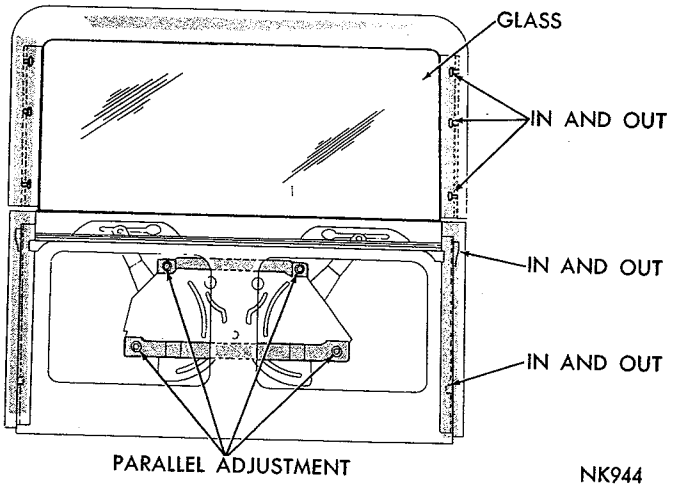


*Fig. 180—Tail Gate Glass Adjustments*

MyMopar.com

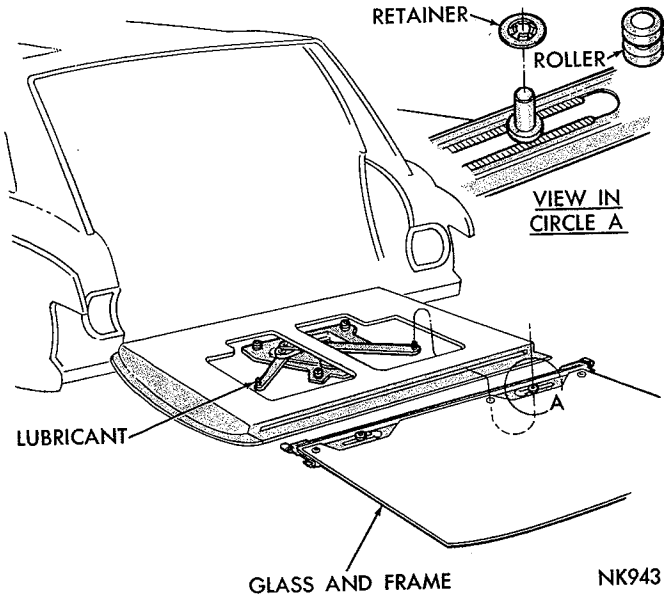


***Fig. 181—Tail Gate Glass Replacement***

(5) With tail gate in vertical position, insert glass assembly into tail gate.

(6) Position regulator arm studs in rollers and install retainers on the ends of studs.

(7) Adjust tail gate glass and install trim panel.

### Regulator Replacement

The regulator assembly (Fig. 183) controls the parallel adjustment of the tail gate glass. The regulator assembly is attached to mounting brackets on the tail gate inner panel by screw and washer assemblies.

### Tests—Regulator Motor

**A tail gate glass may not move when the control switch is actuated due to a binding condition between the glass and run channels.**

### Control Switch

Disconnect the black wire at control switch (Fig. 184) and hold firmly against yellow wire terminal on control switch. The glass (if raised) should start to lower. Repeat this test with the brown wire. The glass (in lowered position) should start to rise. If glass operate during these tests, but fails to operate when the control switch lever is moved to "UP" or "DOWN" position, the switch is at fault. If glass fails to operate during these tests, perform the Wire Harness Tests.

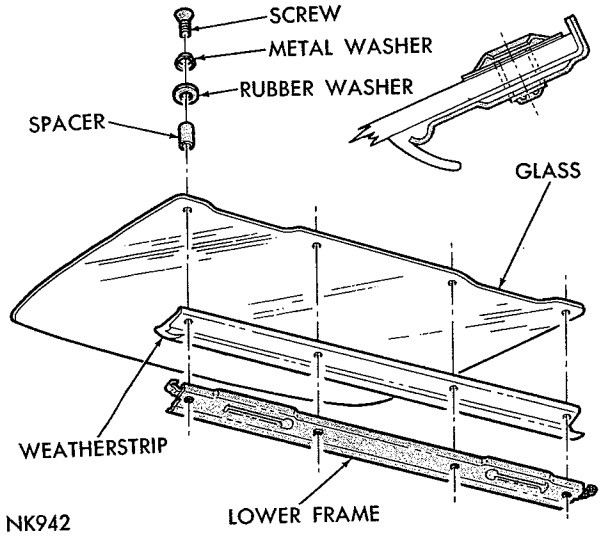


***Fig. 182—Tail Gate Glass Attachment—Fury***

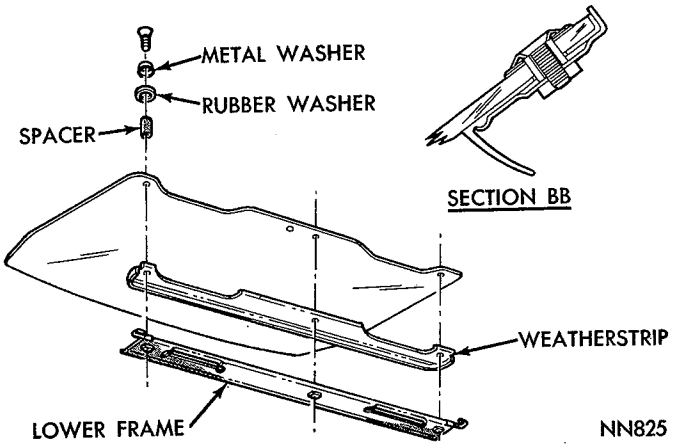


***—Belvedere***

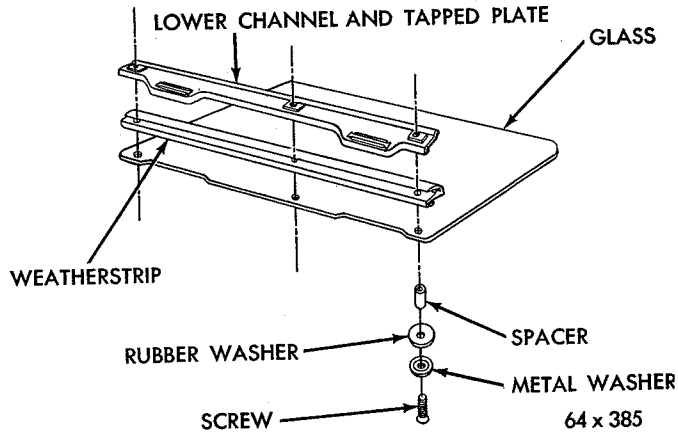


***—Valiant***

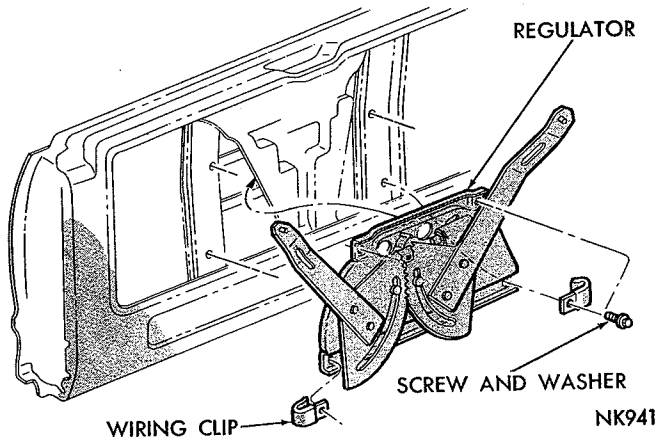


***Fig. 183—Tail Gate Regulator—Fury***

MyMopar.com

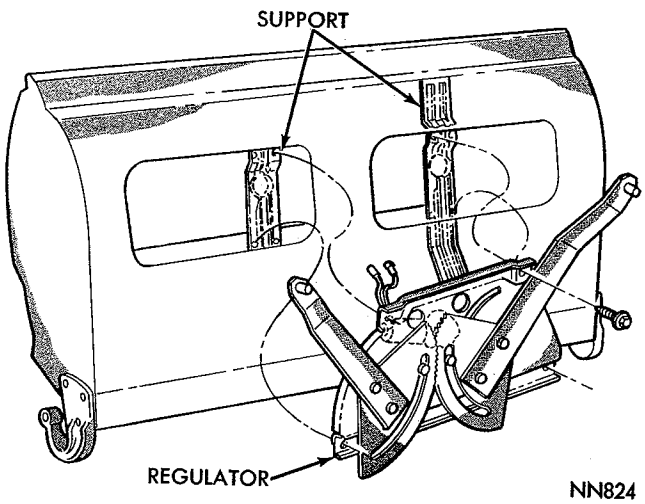


—Belvedere

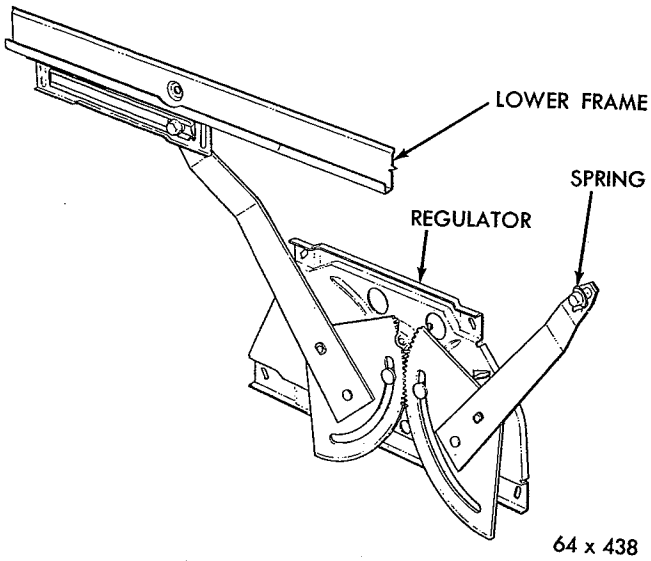


—Valiant

## Wire Harness (Fig. 184)

Disconnect wire harness connector at motor. Connect one wire of a test light to brown wire and the other to a good body ground. Position instrument panel switch in the "UP" position. The bulb should light. Repeat test with the yellow wire, but position switch in the "DOWN" position. If bulb fails to light either time, and all wire terminals are tight, replace the circuit breaker.

Should the test light illuminate on one wire but not the other, inspect wire harness (Fig. 185) for a broken wire. If the bulb lights in both tests, place one wire of the test light to the black wire terminal on the motor and the other wire to a good body ground. Position the switch in either "UP" or "DOWN" position. If bulb should light inspect for a bad ground connection or broken black wire. If test bulb does not light and the wire harness test is positive, replace the motor.

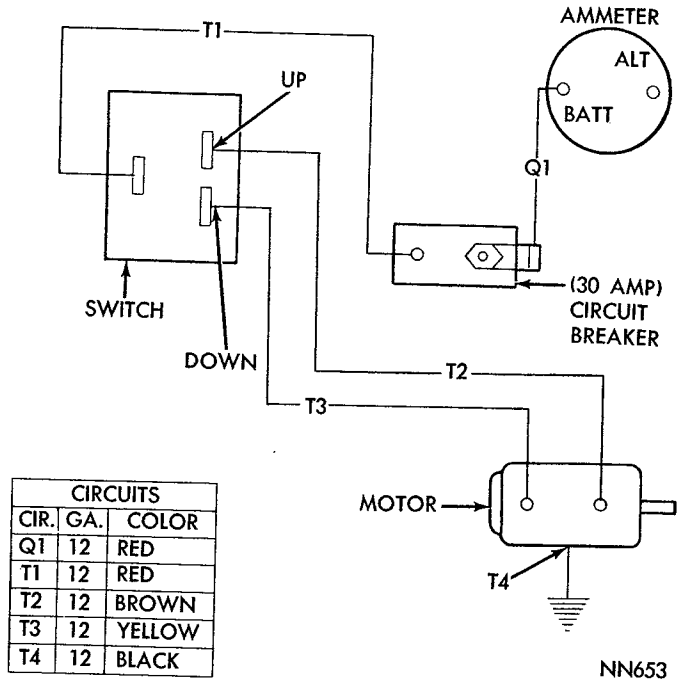


| CIRCUITS | | |
|---|---|---|
| CIR. | GA. | COLOR |
| Q1 | 12 | RED |
| T1 | 12 | RED |
| T2 | 12 | BROWN |
| T3 | 12 | YELLOW |
| T4 | 12 | BLACK |

Fig. 184—Tail Gate Wiring Diagram

## Run Channel

### Removal

(1) Remove tail gate glass assembly.

(2) Remove screw and washer assembly from upper end of glass run channel (Fig. 186).

(3) Remove nut and washer attaching glass run at lower mounting bracket.

(4) Remove glass run channel assembly.

### Installation

(1) Insert the glass lower run channel into tail gate.

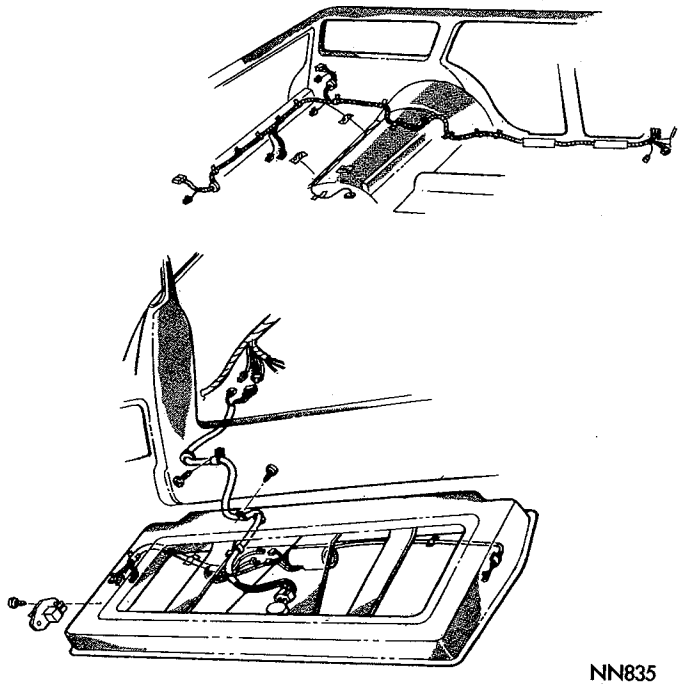


Fig. 185—Wire Harness Routing (Valiant)

MyMopar.com

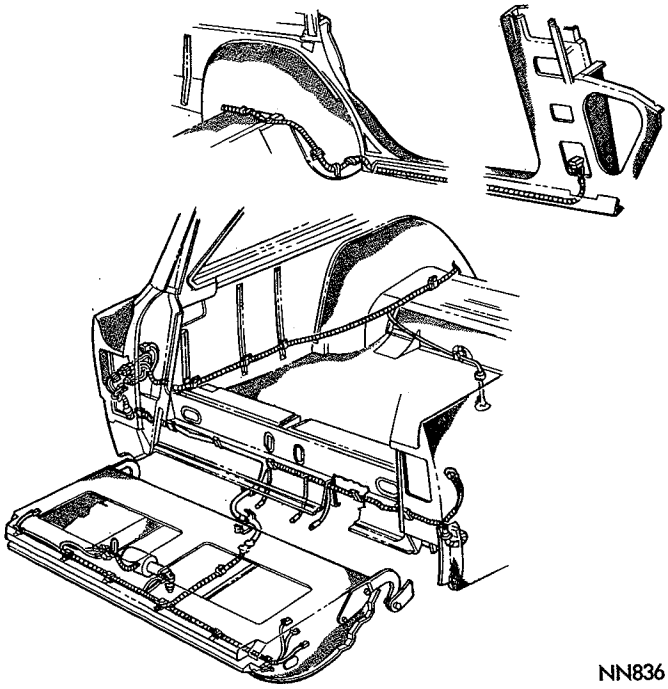


**Belvedere**

(2) Position lower bracket of channel over stud on hinge reinforcement and install washer and nut finger tight only.

(3) Install upper bracket retaining screw and washer finger tight only.

(4) Install and adjust tail gate glass.

## TORSION BAR

### Removal

(1) Remove tail gate assembly and place on a cover, to protect paint surface.

(2) Remove trim panel from tail gate.

(3) Remove screws attaching torsion bar clamp to tail gate pillar (Fig. 187) and remove clamp.

(4) Remove torsion bar bearing retainer and bearing.

(5) Remove screws attaching torsion bar and hinge to tail gate.

(6) Remove torsion bar from hinge.

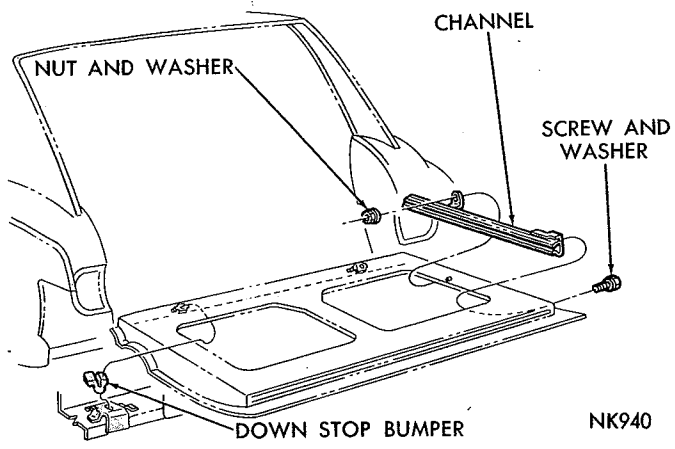


**Fig. 186—Glass Run Channel**

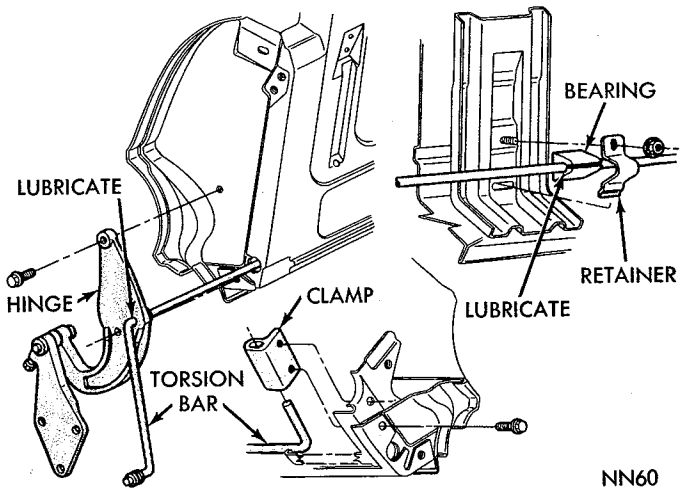


**Fig. 187—Tail Gate Torsion Bar**

### Installation

(1) Lubricate torsion bar at right hinge area and at torsion bar bearing area.

(2) Install hinge on torsion bar and insert torsion bar into tail gate.

(3) Position hinge to tail gate and install mounting screws. Tighten screws 30 foot-pounds.

(4) Install bearing and bearing retainer on torsion bar (Fig. 187). Tighten retainer nut 95 inch-pounds.

(5) Position clamp over end of torsion bar and from outside end of tail gate install attaching screws. Tighten to 200 inch-pounds.

(6) Install tail gate trim panel and tail gate assembly.

## WEATHERSTRIPS AND RUNS

### Weatherstrip—Tail Gate and Opening

Prior to installing the weatherstrip (Figs. 188 and 189) make certain the seating area is free of all old weatherstrip, sealer and other foreign material.

Apply an even continuous coat of cement, starting at the belt line, down one side, across the bottom and up the opposite side of the lower opening. Install the weatherstrip and seal the area at the belt line.

### Upper Run Retainer and Seal

### Removal

(1) Remove five screws attaching the glass run retainer to roof rear header and remove retainer (Fig. 190).

(2) Remove seal assembly from roof rear header.

(3) Remove headlining rear corner retainer, if necessary.

(4) Remove roof headlining rear retainer from roof panel rear header outer reinforcement, if necessary.

### Installation

(1) Position roof headlining rear retainer to roof

MyMopar.com

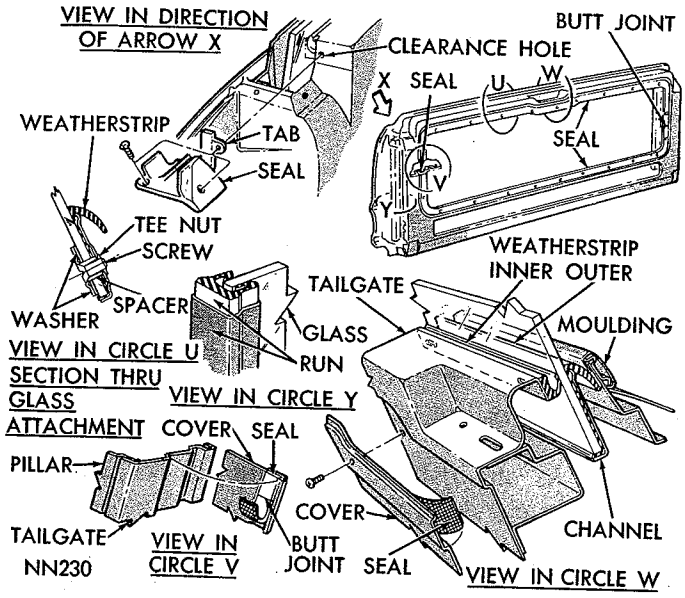


**Fig. 188—Tail Gate Weatherstrip**

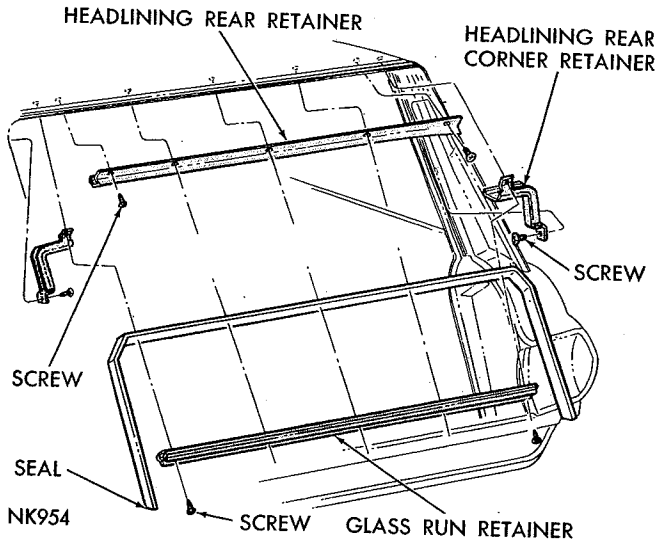


**Fig. 190—Upper Run Retainer and Seal**

panel rear header outer reinforcement, if removed, and install two retaining screws.

(2) Install roof headlining rear corner retainer over end of headlining retainer, if removed, and install retainer screw.

(3) Using a new glass run retainer seal, start at lower edge of upper pillar and apply seal up and across roof header and down opposite pillar.

(4) Position roof rear header tail gate glass run retainer on seal and install retaining screws.

### Upper Run and Pillar Run

### Removal

(1) Remove upper run from run retainer (a press fit into retainer) (Fig. 191).

(2) Remove screw attaching pillar run to upper end of tail gate lower opening weatherstrip.

(3) Remove three screws attaching pillar run and retainer to pillar and remove run and retainer assembly.

### Installation

(1) Position pillar glass run and retainer on pillar,

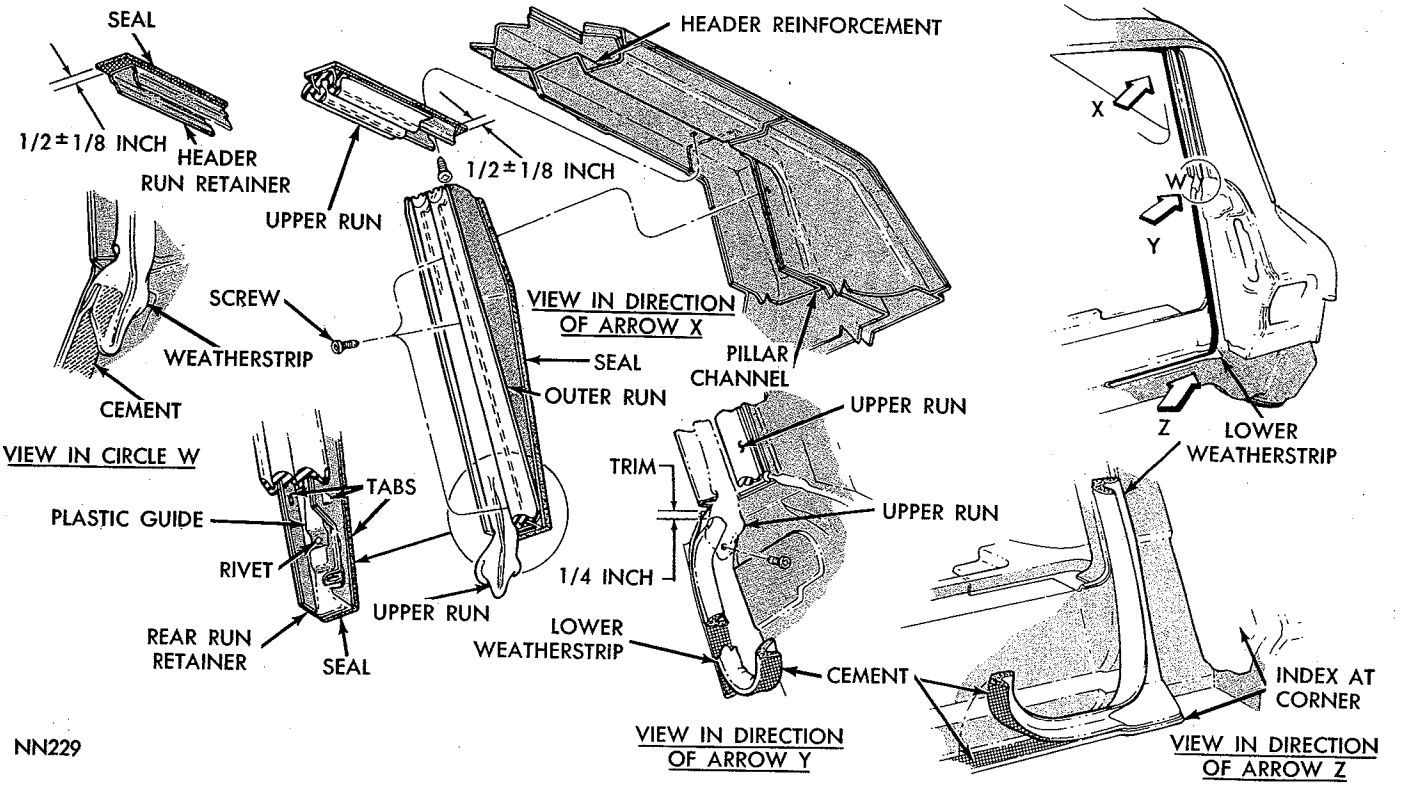


**Fig. 189—Tail Gate Opening Weatherstrip**

MyMopar.com

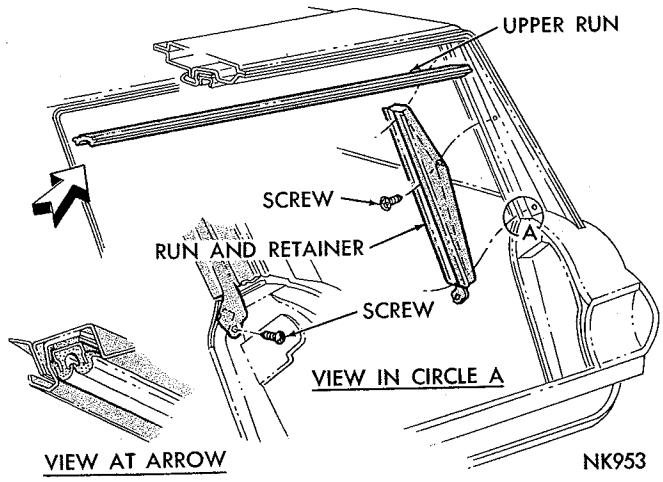


*Fig. 191—Upper and Pillar Runs*

inserting upper end into end of roof header glass run retainer and install retaining screws.

(2) Install screw attaching lower end of retainer over lower opening weatherstrip.

(3) Starting at center line of roof rear header glass run retainer, install upper run by pressing it into retainer.

(4) Adjust pillar glass runs as necessary.

## DECK LID

### Alignment (Except Barracuda)

The deck lid hinges (Fig. 192) permit only a very slight adjustment at the deck lid to hinge attaching points.

### Barracuda Models

The hinge to deck lid screw holes are slightly oversize allowing a partial deck lid adjustment. Additional alignment is obtainable at the hinge to deck upper panel mounting (Fig. 193).

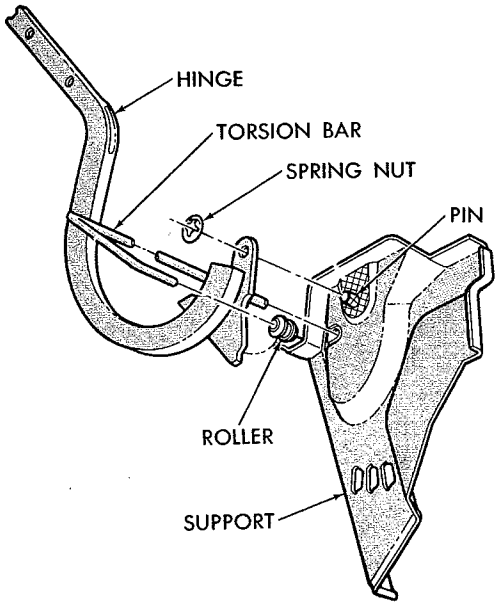


*Fig. 192—Deck Lid Hinge and Torsion Bar*

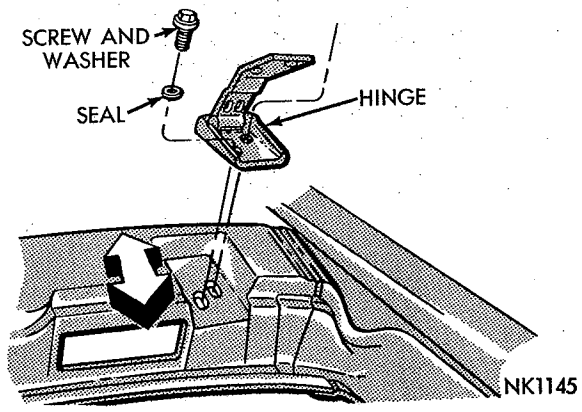


*Fig. 193—Deck Lid Hinge—Barracuda*

### Replacement

The deck lid is attached to the hinges by two screws on each side. An assistant's aid is recommended when replacing the deck lid to prevent it from sliding rearward and damaging the paint and also to aid in the aligning of the hinge screw holes when it is installed. On Barracuda Models, disconnect support from the deck lid (Fig. 194).

### Hinge Replacement (Except Barracuda)

### Removal

(1) Remove the deck lid assembly.

(2) Disengage the torsion bar roller from hinge being removed. Use care when disengaging torsion bar as it is under a load.

(3) Remove spring nut (Fig. 192) retaining hinge to hinge bracket and remove hinge.

### Installation

(1) Use a new spring nut and install hinge on hinge bracket.

(2) Install deck lid assembly and connect torsion bar.

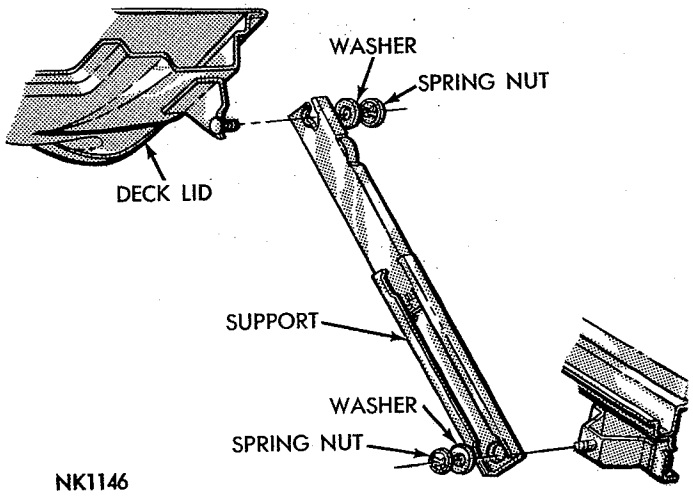


*Fig. 194—Deck Lid Support—Barracuda*

MyMopar.com

### Barracuda Models

(1) Remove deck lid support (Fig. 194) from deck lid.

(2) Remove hinge to deck lid screws and remove deck lid.

(3) Remove moulding to hinge screws (Fig. 195).

(4) Remove hinge to upper deck panel attaching screws and hinge.

(5) When installing hinge, care should be exercised in aligning moulding.

(6) Inspect deck lid alignment before final tightening of the hinge **(do not overtighten)** to deck lid and upper panel attaching screws.

## TORSION BAR REPLACEMENT

### Removal

(1) Remove torsion bar (underspring load) from adjustment slot (Fig. 192).

(2) Unwind torsion bar.

(3) Unhook torsion bar from support bracket.

(4) Push torsion bar out of roller in hinge arm and remove from hinge support.

### Installation

(1) Insert bar into hinge support.

(2) Insert end of torsion bar into roller in hinge arm.

(3) Hook torsion bar into support bracket.

(4) Wind torsion bar and insert end of bar into first adjusting slot.

(5) Place deck lid in various open positions and test tension of torsion bars.

(6) Adjust torsion bars progressively until deck lid stays in open position.

### Lock Replacement

The deck lid lock assembly (Fig. 196) is attached to the deck lid by two screws. Scribe the location of the lock mounting flanges to aid in installation.

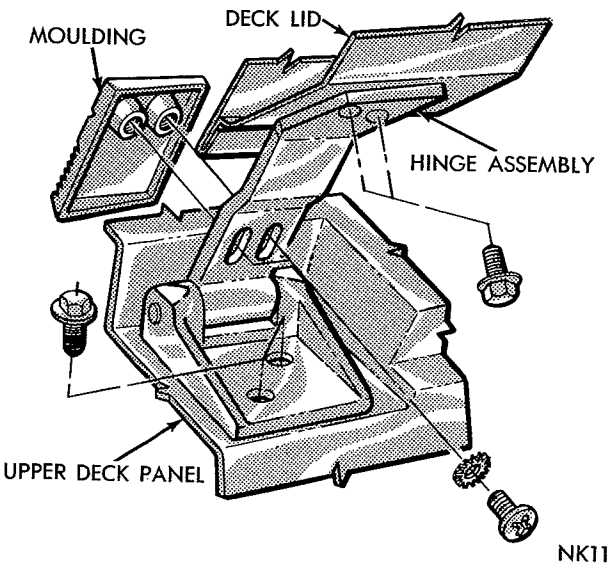


*Fig. 195—Moulding to Hinge Attachment—Barracuda*

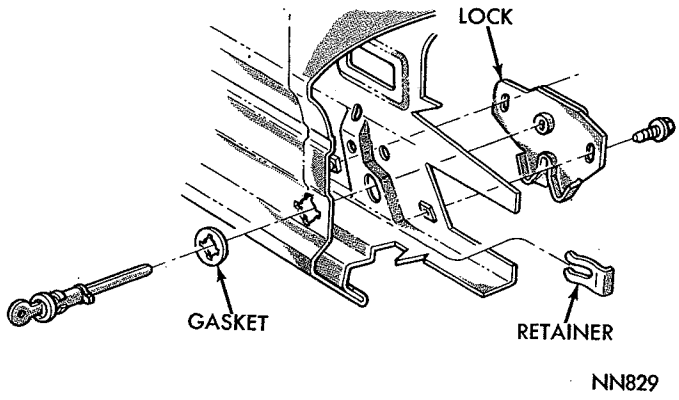


*Fig. 196—Deck Lid Lock Replacement*

### Lock Adjustment

Vertical adjustment of the deck lid lock is made at the lock attaching screws. The side adjustment is made at the striker attaching bolts.

### Lock Cylinder

The deck lid lock cylinder (Fig. 196) is retained in the body by a spring steel "U" shaped clip attached from within the body.

### Weatherstrip

Apply an even continuous coat of cement to entire weatherstrip contact surface of deck lid opening (Fig. 197) and install weatherstrip. Make sure molded corners of weatherstrip are correctly positioned.

## EXTERIOR MOULDINGS

## APPLICATION OF MOULDINGS

The circled reference numbers on Figures 198 through 205 refer to the type of retainer, illustrated in Figure 206, used at those areas. The reference retainers are typical of the type used.

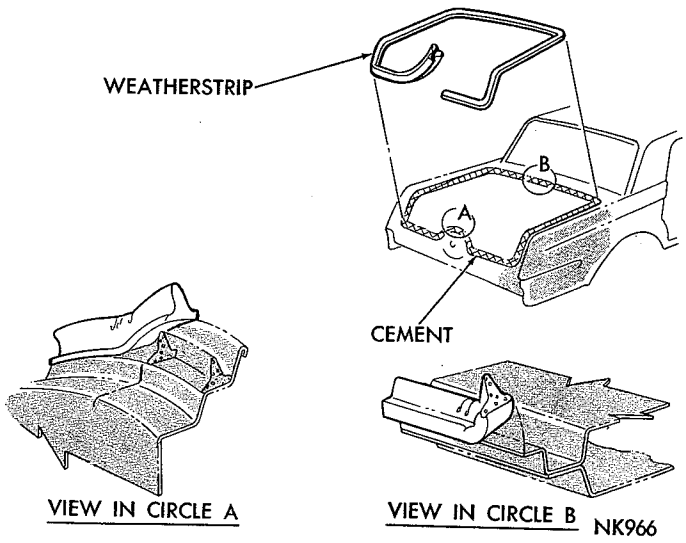


*Fig. 197—Deck Lid Weatherstrip*

MyMopar.com

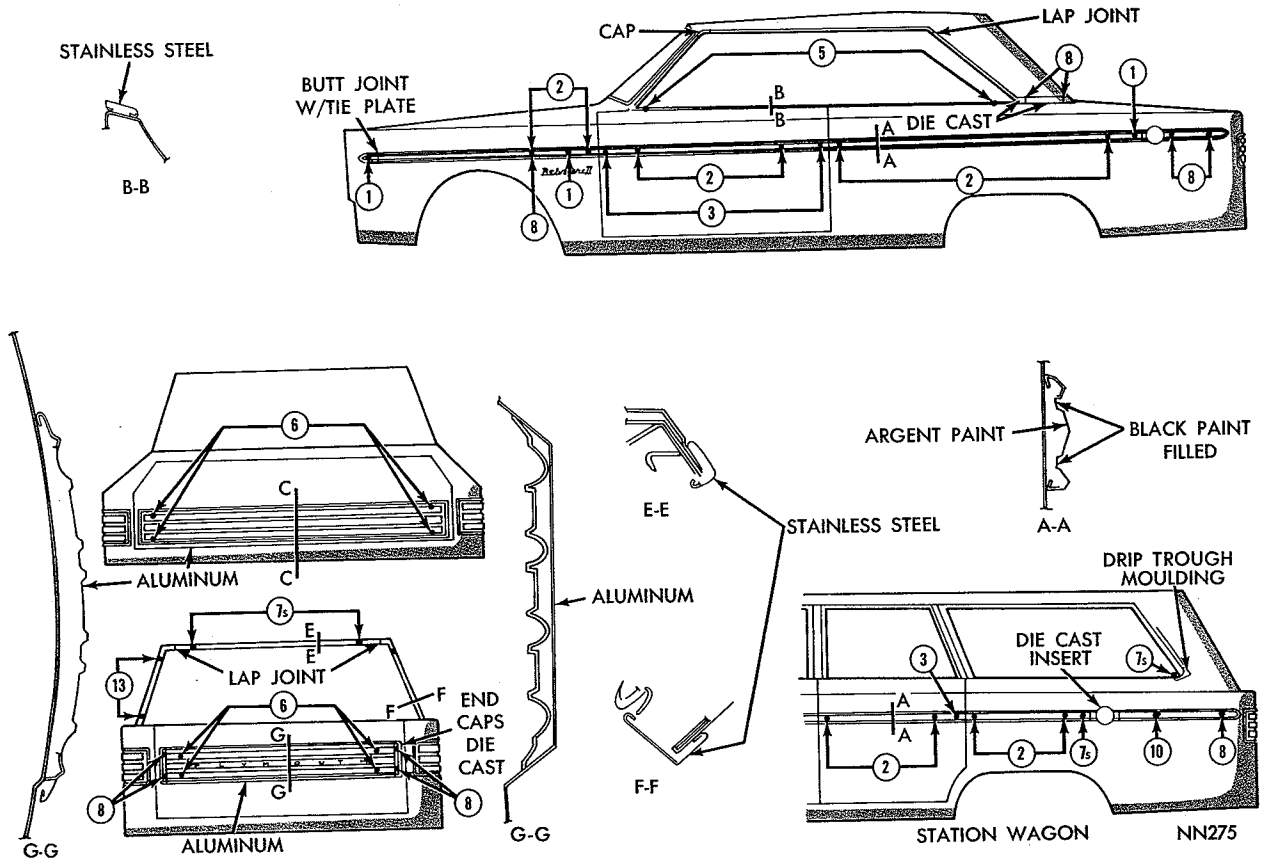


**Fig. 198—Exterior Mouldings—Belvedere II**

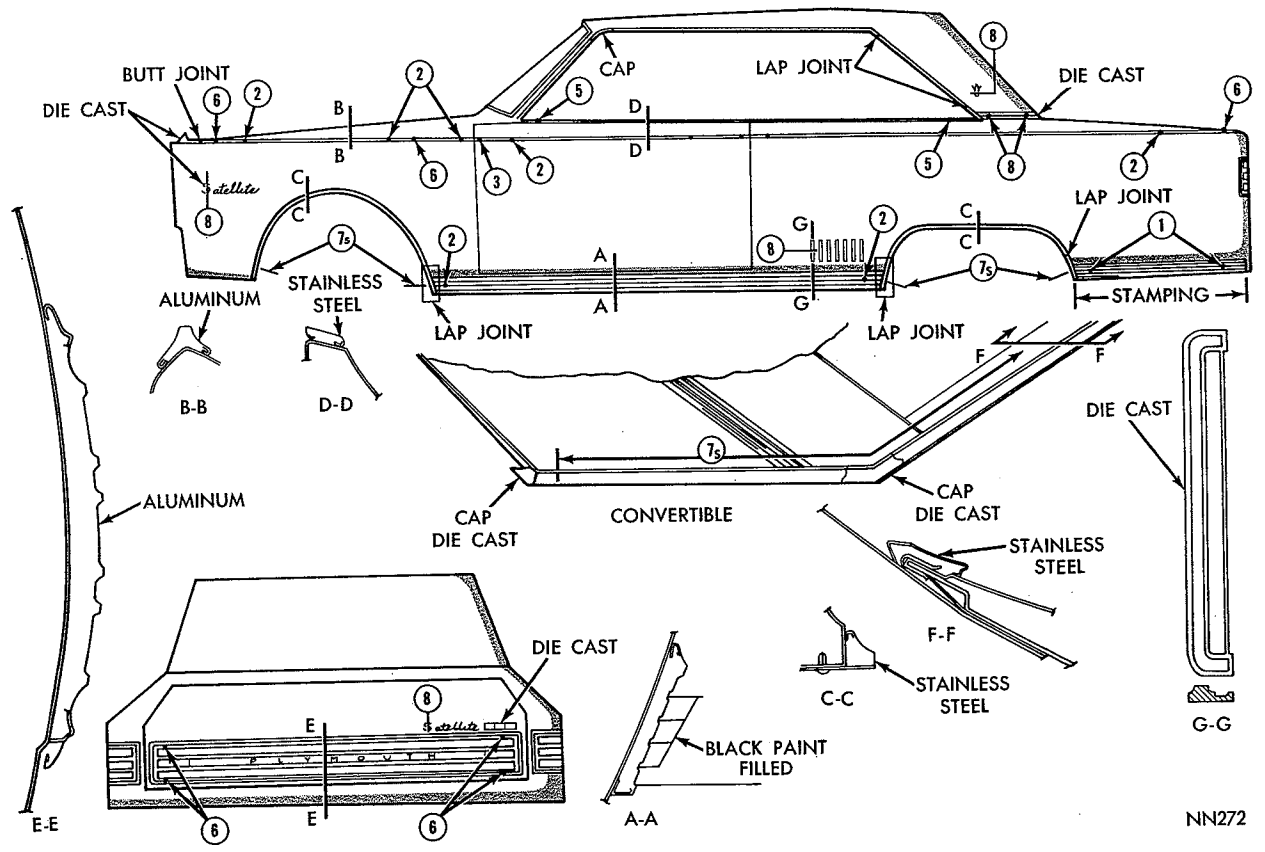


**Fig. 199—Exterior Mouldings—Satellite**

MyMopar.com

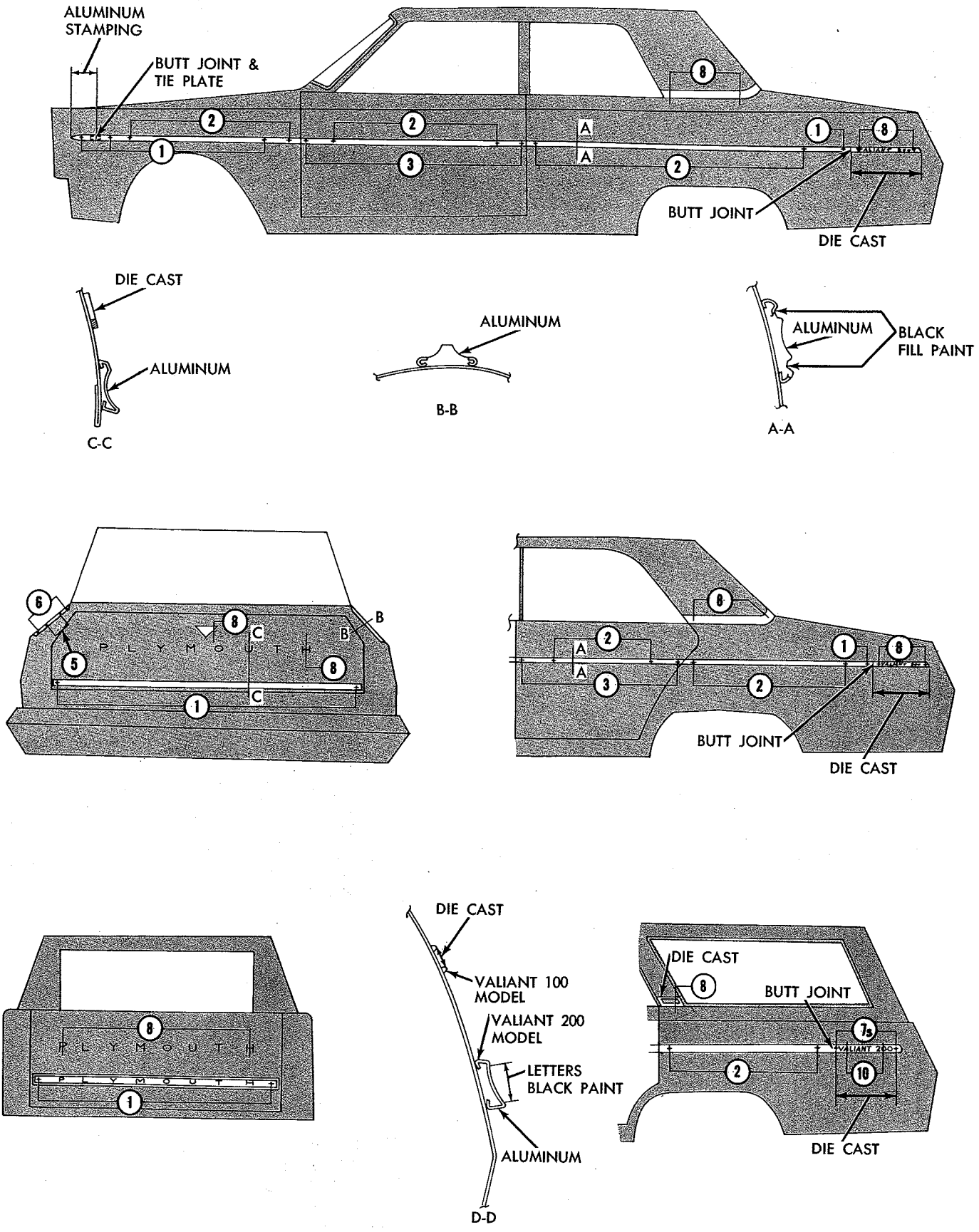


***Fig. 200—Exterior Mouldings—Valiant***

MyMopar.com

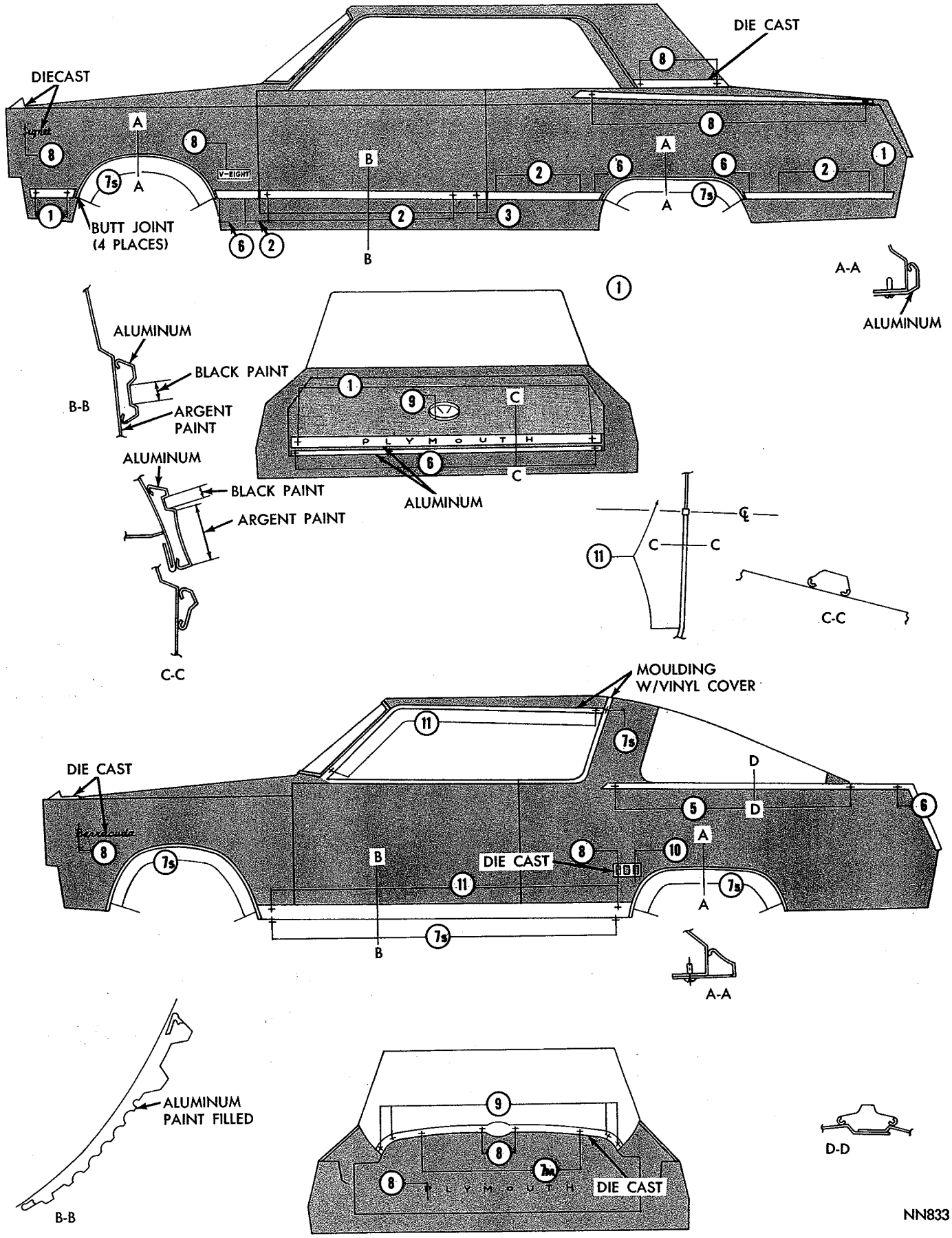


*Fig. 201—Exterior Mouldings—Signet and Barracuda*

MyMopar.com

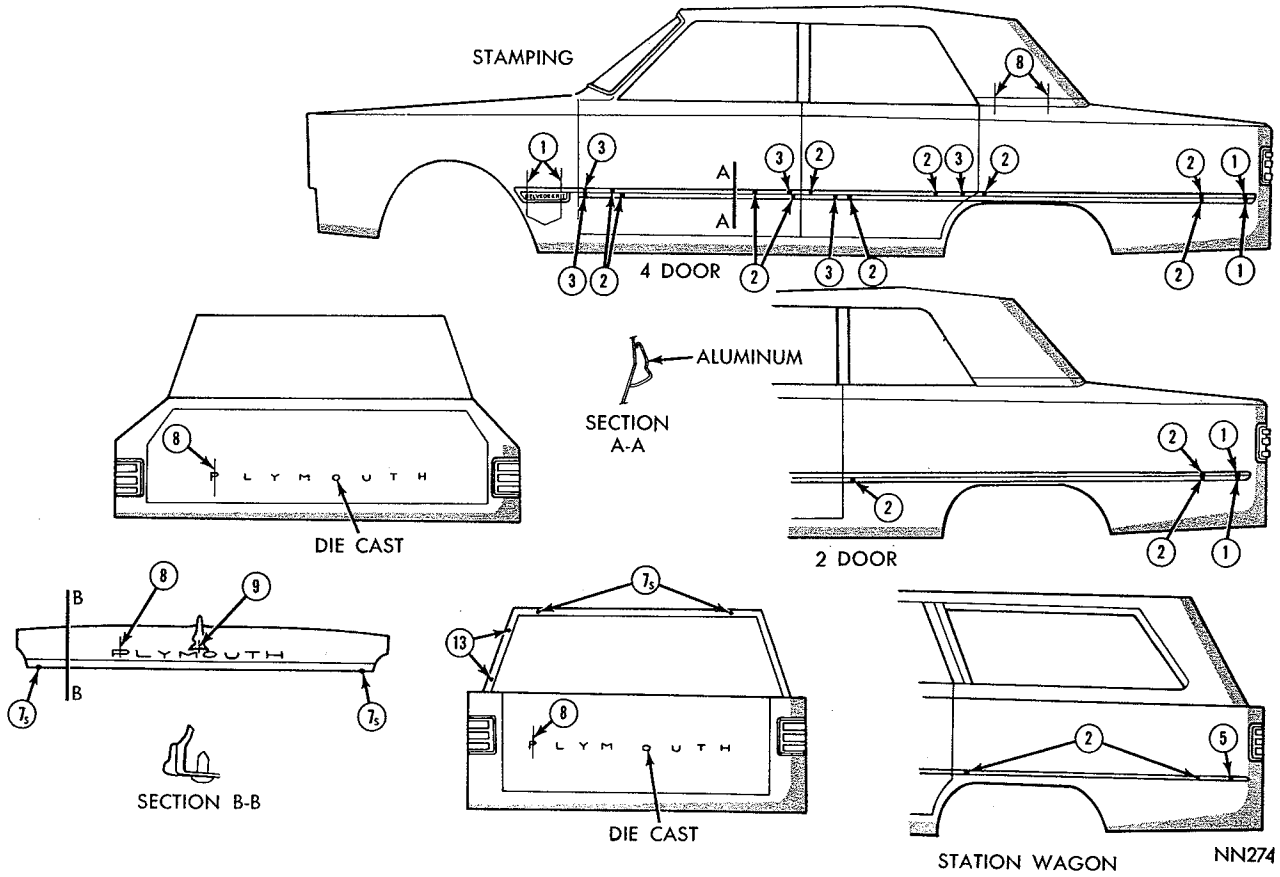


**Fig. 202—Exterior Mouldings—Belvedere I**

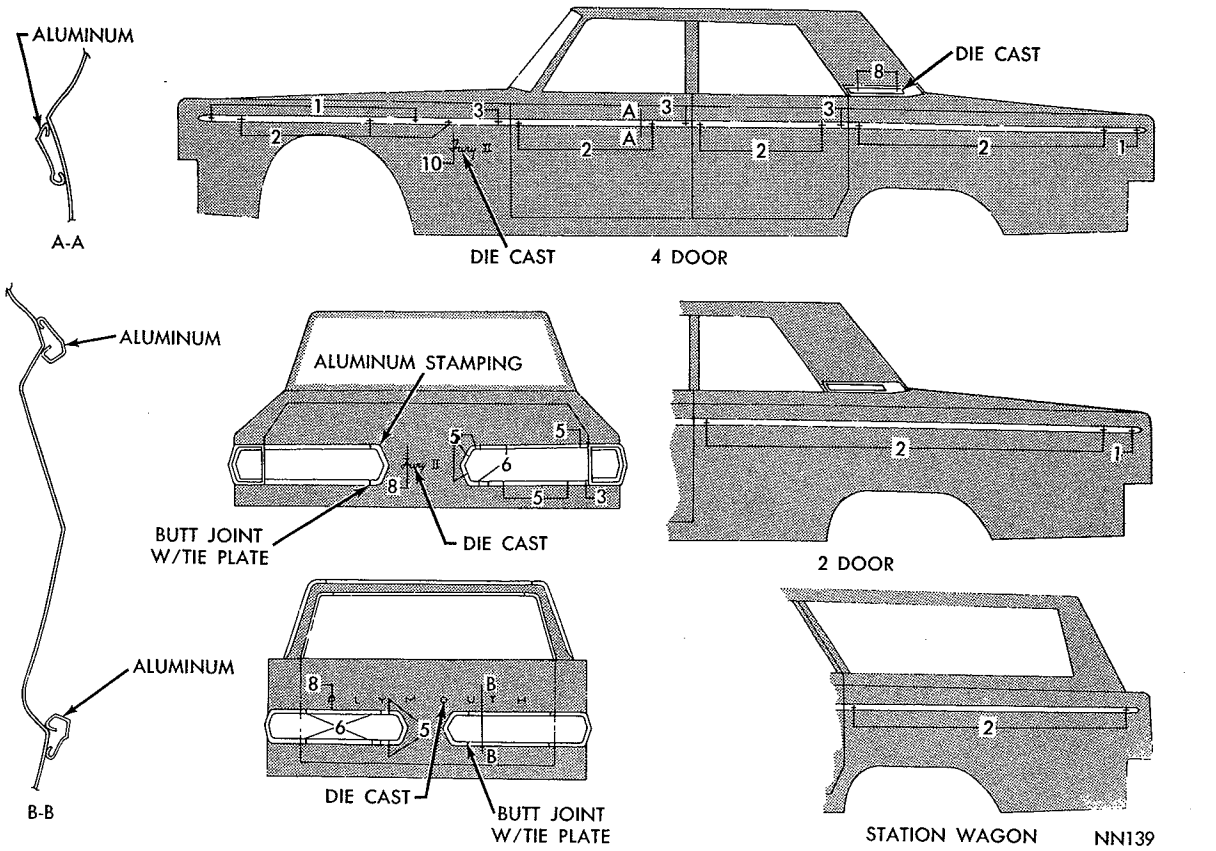


**Fig. 203—Exterior Mouldings—Fury II**

MyMopar.com

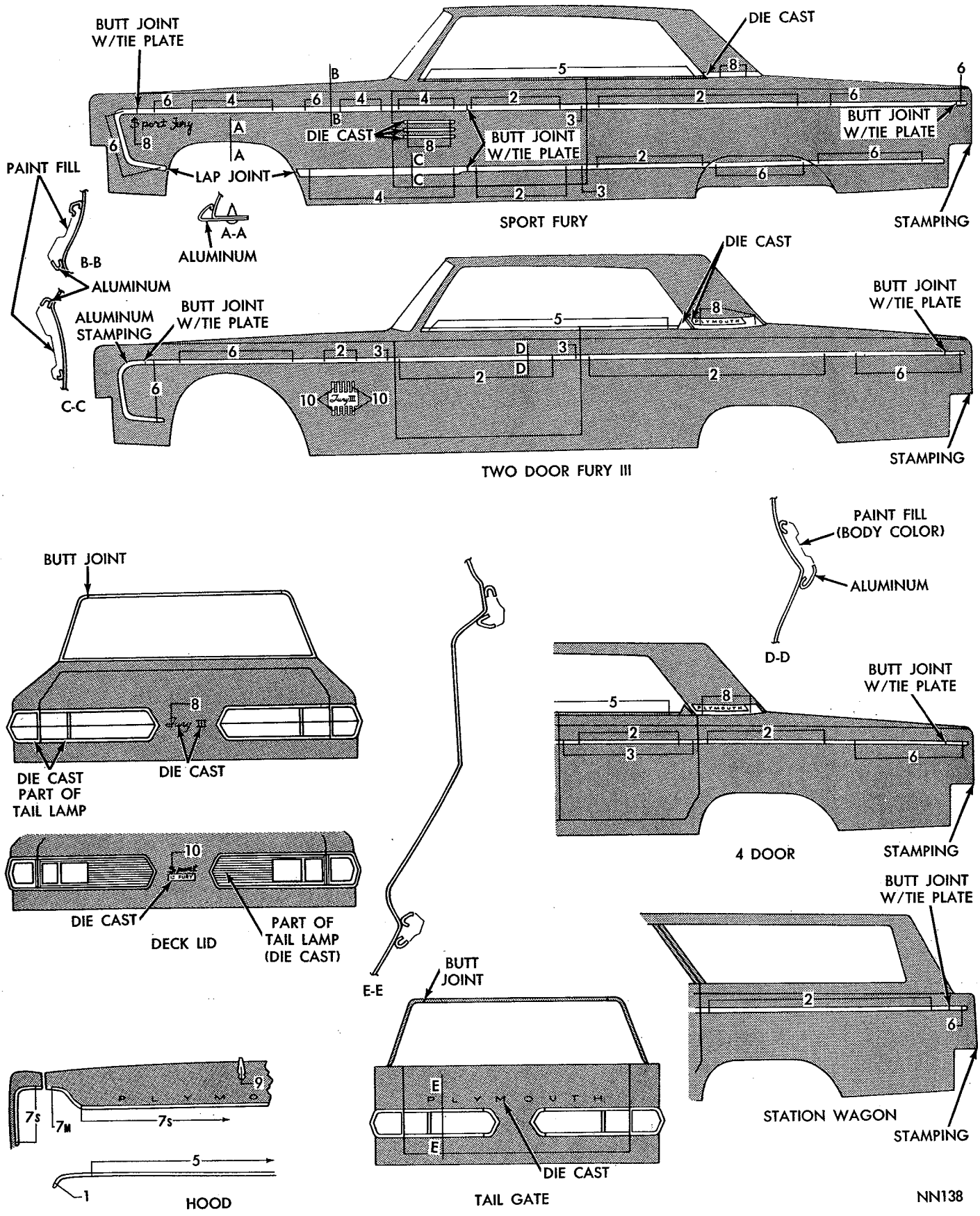


***Fig. 204—Exterior Mouldings—Fury III and Sport Fury***

MyMopar.com

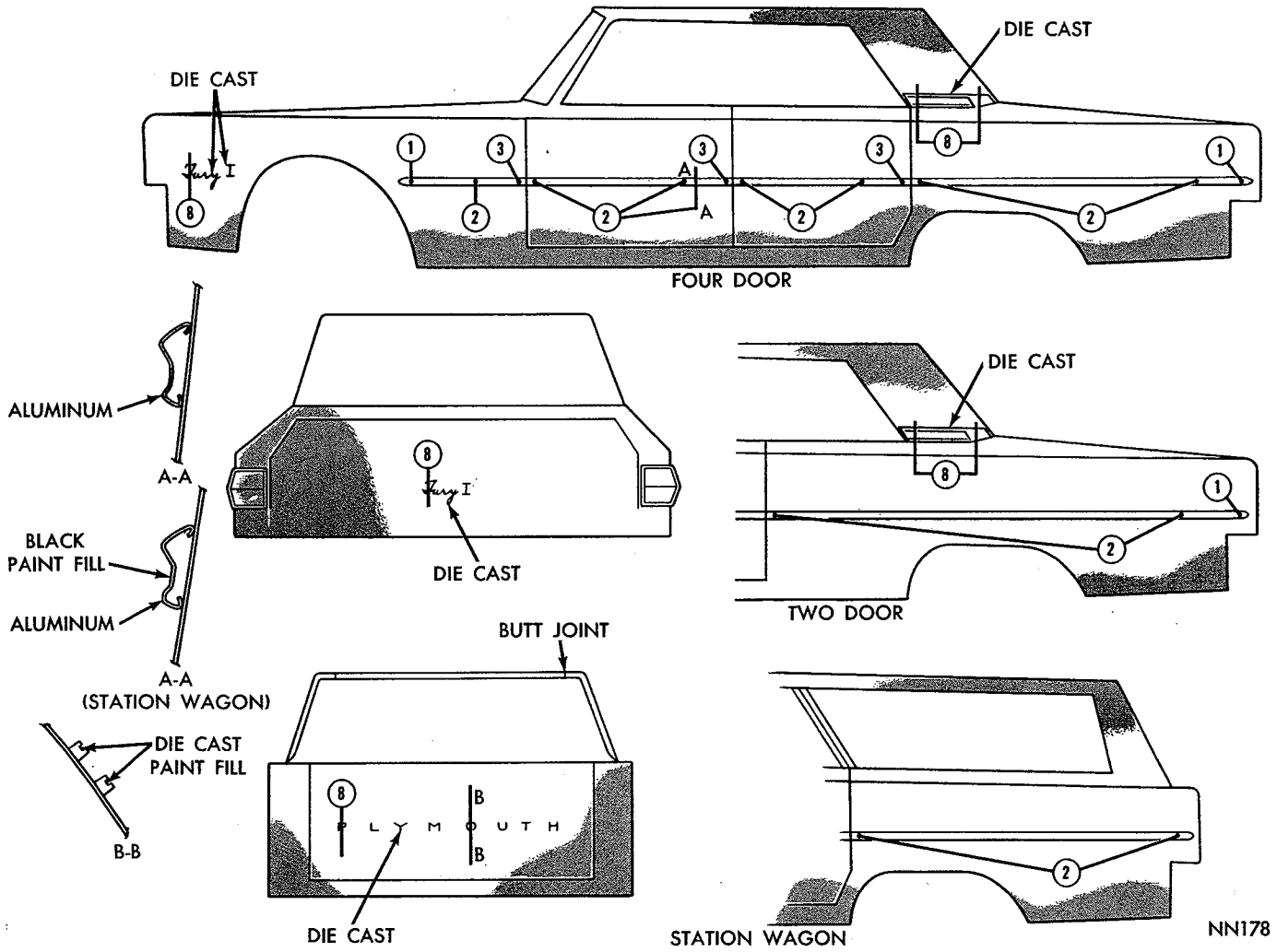


***Fig. 205—Exterior Mouldings—Fury I***

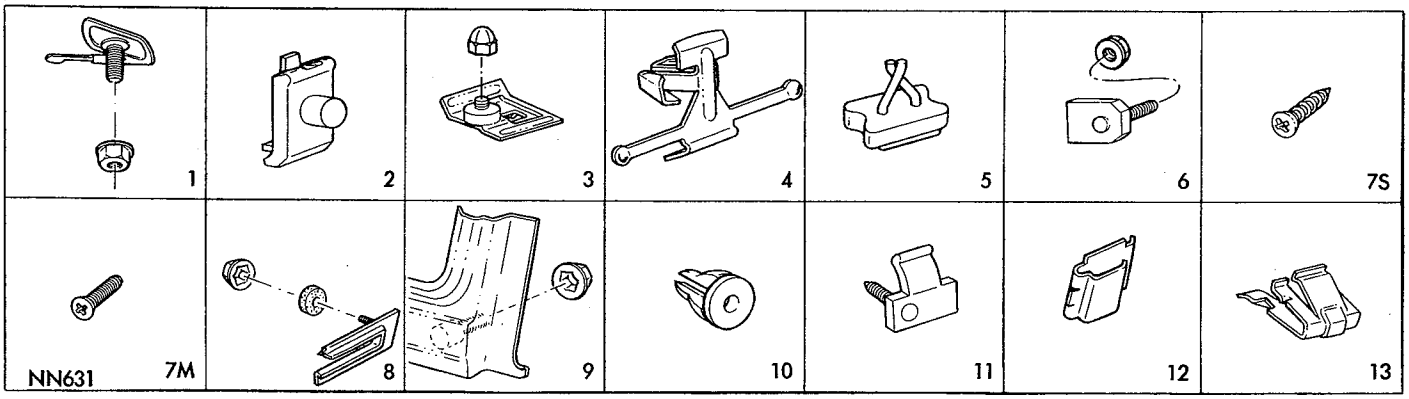


***Fig. 206—Ornamentation Retainers***

(1) Cam-In Metal or Plastic Retainer W/Stud & Nut
(2) Plastic Drive-Pin Retainer (Snap-Over)
(3) Plastic or Metal Tie Plate Retainer W/Stud & Cap Nut (Door End)
(4) Metal "W" Prong Retainer
(5) Wire Form Retainer
(6) Plastic or Metal Retainer W/Stud & Nut
(7s) Screw (Sheet Metal Thread)
(7m) Screw (Machine Thread)
(8) Die Cast or Aluminum Stud W/Thread Cutting Nut
(9) Driven Stud W/Machine Nut
(10) Die Cast or Aluminum Stud W/Barrel Clip
(11) Plastic or Metal Retainer W/Screw
(12) Metal Retainer W/Pinch Leg (Snap-Over)
(13) Retainer W/Barbs (For Pinch Weld Application)

MyMopar.com

# INTERIOR TRIM AND SEATS

## INDEX


| | Page |
|---|---|
| INTERIOR TRIM | |
| Console | 75 |
| Floor Covers | 75 |
| Scuff Plates | 75 |
| Garnish Mouldings | 74 |
| Glove Box—Build-Up | 81 |
| Door | 81 |
| Replacement | 82 |
| Headlining—Fabric | 76 |
| Hardboard | 81 |
| Moulding and Retainers | 81 |
| Scuff Plates | 75 |
| Trim Panels—Instrument Panel | 74 |
| Package Shelf | 82 |
| SEATS | |
| Adjustments | 82 |
| Arm Rest—Rear | 100 |
| Belts—Safety | 104 |
| Build-Up | 85 |
| Back—Front Seat | 96 |
| Belvedere—Satellite | 97 |
| 2 Door | 97 |
| 4 Door | 97 |
| Bucket Seat | 98 |
| Fury I—2 Door Sedan | 96 |
| II and III—4 Door | 96 |
| Bucket Seat | 96 |
| Valiant—2 Door | 98 |
| 4 Door | 98 |
| Bucket Seat | 98 |
| Rear Back | 100 |
| Belvedere—Satellite | 100 |
| Convertible | 100 |
| Hardtop | 100 |
| Sedan | 100 |
| Station Wagon 2nd and 3rd | 102 |
| Fury | 99 |
| Arm Rest | 100 |
| Convertible | 99 |
| Hardtop—Fury | 99 |
| Sport Fury | 99 |
| 4 Door | 99 |
| Sedan | 99 |
| Station Wagon 2nd and 3rd | 100 |
| Valiant | 102 |
| Barracuda | 104 |
| Convertible | 103 |
| Hardtop | 102 |
| Sedan | 102 |
| Station Wagon | 103 |
| Cushion—Front Seat | 85 |
| Belvedere—Satellite | 87 |
| Bucket Seat | 88 |
| Hardtop | 88 |
| Fury | 85 |
| I Sedan | 85 |
| II Sedan and Station Wagon | 86 |
| II and III—Hardtop—Convertible | 87 |
| Bucket Seat | 87 |
| Valiant | 88 |
| Bucket Seat | 88 |
| Hardtop and Sedan | 88 |
| Rear Seat | 88 |
| Belvedere—Satellite | 93 |
| Convertible | 94 |
| Hardtop | 93 |
| Sedan—2 Door | 92 |
| 4 Door | 92 |
| Fury | 88 |
| I Sedan—2 Door | 88 |
| 4 Door | 89 |
| II Convertible | 89 |
| Hardtop | 89 |
| Sedan—2 Door | 88 |
| 4 Door | 89 |
| III Convertible | 90 |
| Hardtop—2 Door | 90 |
| 4 Door | 89 |
| Sedan | 89 |
| Sport Fury—Convertible | 90 |
| Hardtop | 90 |
| Station Wagon—2nd Seat | 91 |
| 3rd Seat | 92 |
| Belvedere—Satellite | 93 |
| Convertible | 94 |
| Hardtop | 93 |
| Sedan—2 Door | 92 |
| 4 Door | 92 |
| Station Wagon 2nd and 3rd Seat | 93 |
| Valiant | 94 |
| Convertible | 95 |
| Hardtop | 94 |
| Sedan | 94 |
| Power Seats | 104 |
| Replacement—Front | 83 |
| Rear Back | 83 |
| Cushion | 83 |
| Station Wagon | 84 |
| 2nd Seat | 84 |
| Cushion | 84 |
| 3rd Seat | 84 |
| Cushion | 85 |
| Seat Belts | 104 |


## GARNISH MOULDINGS

When removing a garnish moulding that is overlapped by an adjoining moulding, loosen the end attaching screw to prevent possible damage to both mouldings.

To assure correct alignment when installing the mouldings; install the screws finger tight, align moulding at each end and tighten screws. **Use care not to draw screws down too much or the moulding will be damaged by metal stretching at the screw holes.**

Removal and installation procedures for the garnish mouldings are covered with the related component.

## INSTRUMENT PANEL TRIM PAD

The instrument panel trim pads are attached with

MyMopar.com

stud type retainers and nuts (Figs. 1 and 2). When installing a trim panel, do not tighten nuts until trim panel has been aligned.

## CONSOLE

The consoles (except Valiant Models) (Fig. 3) are attached to welded brackets on the floor pan tunnel with screws and bolts. To loosen the rear mountings, raise the carpet lower edges to expose the screw and bolt. All other attaching screws are accessible from within the console. On Valiant Models, the console (Fig. 4) is attached to the front bracket with screws from the outer lower edge. The center and rear attaching screws are accessible from within the console.

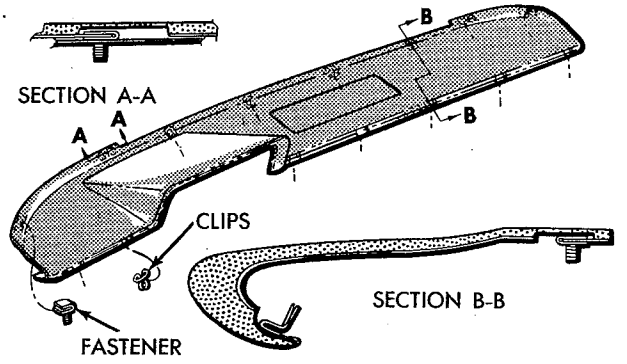


***Fig. 1—Instrument Panel Trim Pad (Fury)***

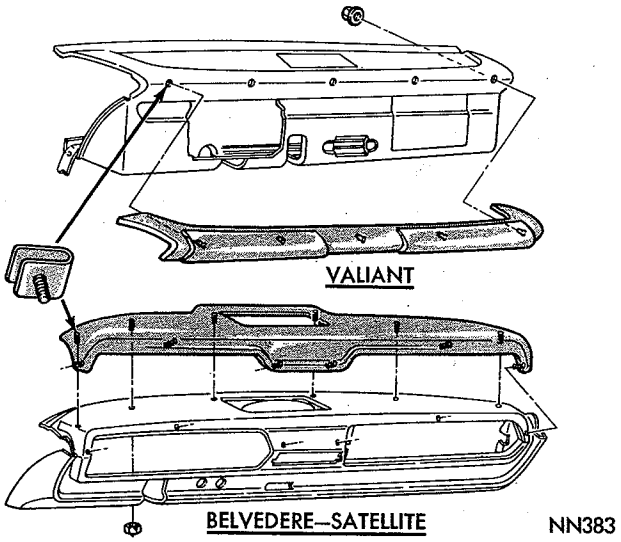


***Fig. 2—Instrument Panel Trim Pad (Belvedere—Valiant)***

## FLOOR COVERING

### *Scuff Plates*

The scuff plates and extensions (Figs. 5, 6 and 7) are retained to the floor sills, quarter inner panels and support brackets with metal screws. When replacement of a sill scuff plate is required, a continuous ¼ inch bead of sealer should be applied at the

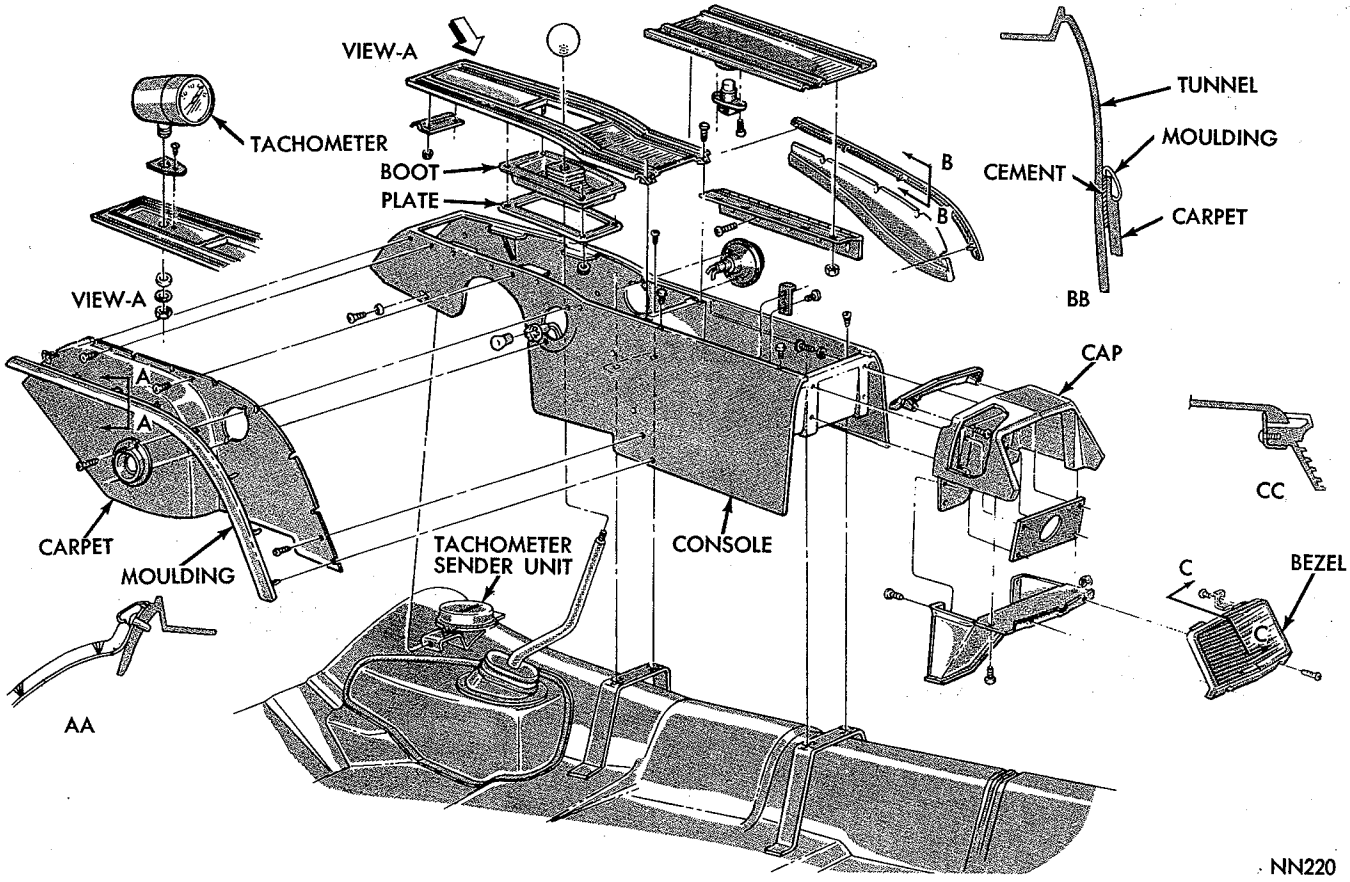


***Fig. 3—Console Attachment (Belvedere—Satellite—Fury)***

MyMopar.com

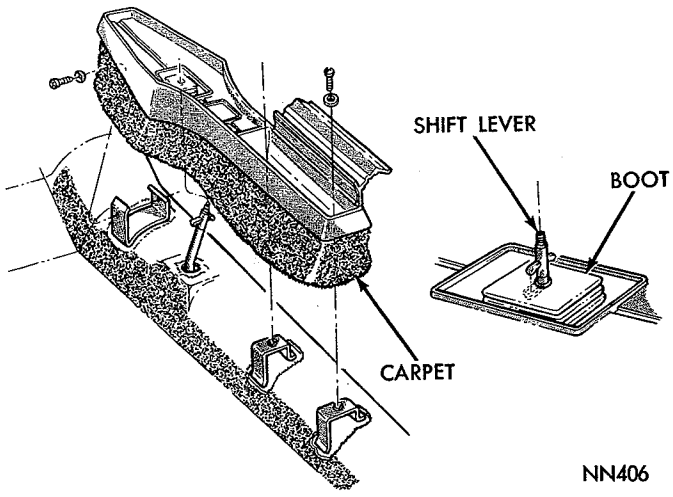


*Fig. 4—Console Attachment (Valiant)*

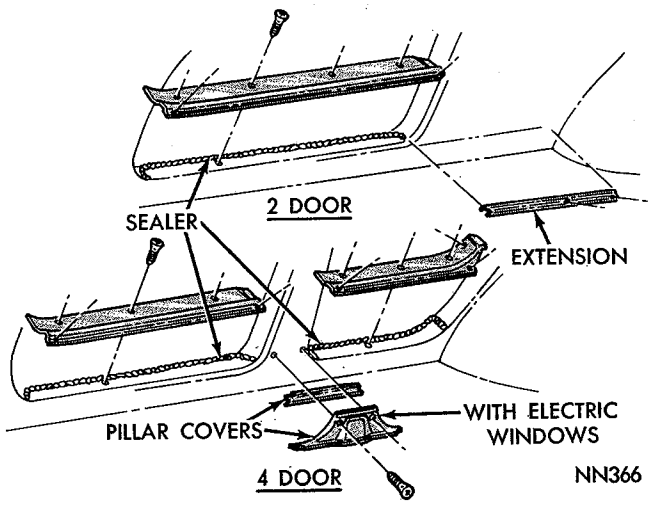


*Fig. 6—Scuff Plates (Belvedere—Satellite)*

ends and outer edge.

### *Floor Covering (Fig. 8)*

The front seat mounting brackets are positioned on top of both front and rear floor covers. The rear floor covering is positioned under the front covering. To remove the rear floor covering it is necessary to remove the front seat assembly and the rear seat cushion.

## HEADLINING

### *Removal—Fabric Type*

(1) Remove rear seat cushion, dome light, bezel and lens, sun visors, rear view mirror and coat hooks.

(2) Remove headlining from cemented areas at windshield header and rear window opening.

(3) Remove headlining from under shelf panel and the drive nail attaching No. 5 listing to roof extension lower edge (Fig. 9).

(4) Using a dull bladed putty knife, disengage fabric from side rail retainer (Figs. 10, 11, 12 and 13) by gently forcing material up and off of retainers and while maintaining pressure on fabric, pull down and out. Work only small areas at a time.

(5) Remove headlining at the windshield header.

(6) Remove listing wires from side rail retainers and support wire from rear listing wire (Figs. 10 and 14).

(7) Remove all foreign material and cement from windshield header area and rear window opening areas.

(8) Remove listing wires from headlining and insert in comparable listing of new liner (Fig. 15 or 15A).

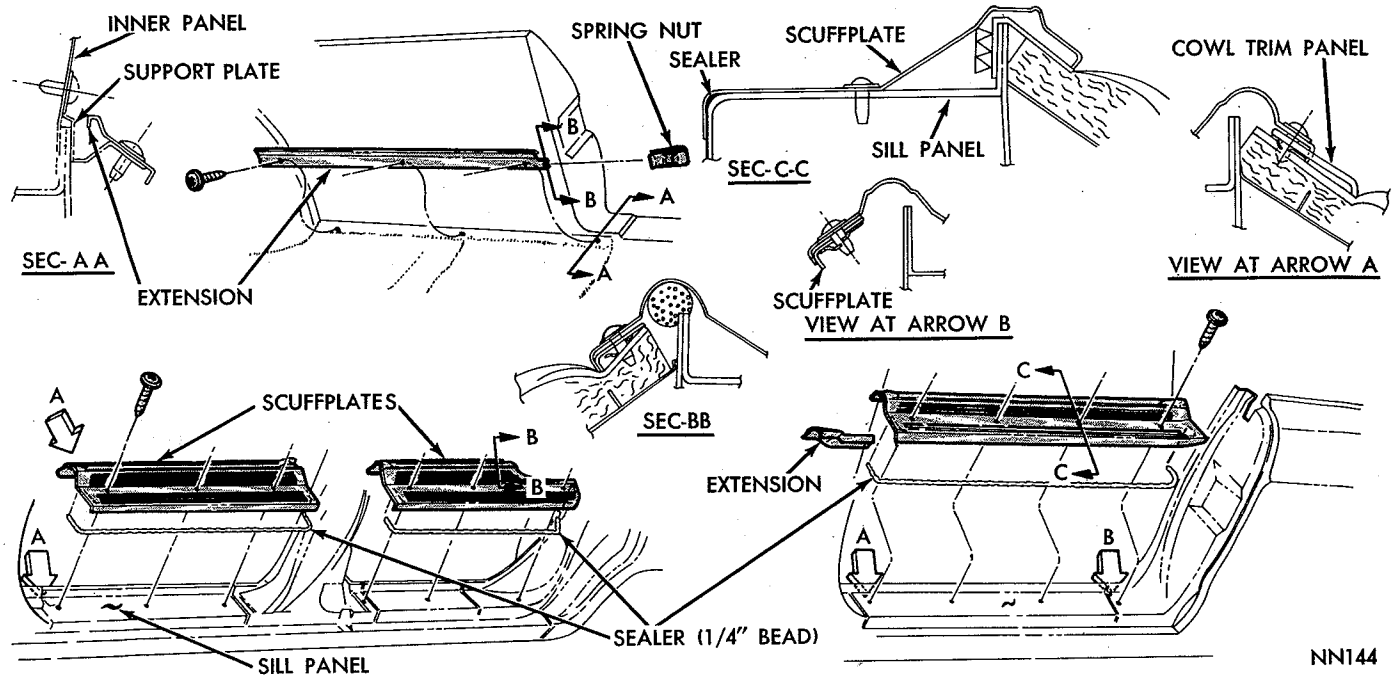


*Fig. 5—Scuff Plates (Fury)*

MyMopar.com

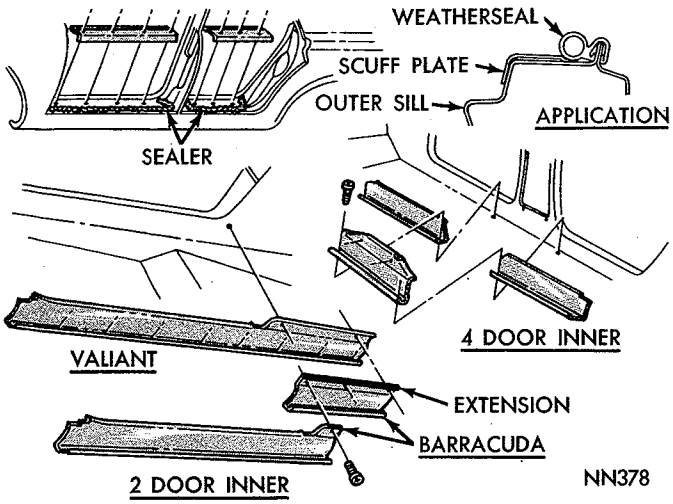


***Fig. 7—Scuff Plates and Extension (Valiant)***

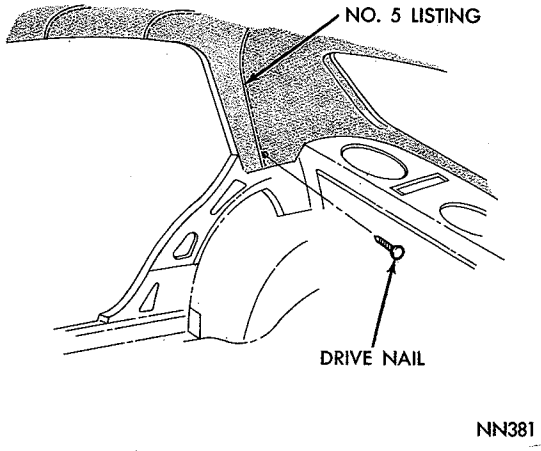


***Fig. 9—Listing Attachment at Roof Extension***

### *Installation*

(1) Trim excess listing material even with edges of headlining.

(2) Locate centerline of lining at front and rear ends, cut a small notch as an aid in maintaining head-

(3) Locate and mark the centerline points of windshield and rear window openings.

(4) Center headlining at rear window and insert rear listing wire to retainer clips on roof rail extensions (Figs. 16, 17 and 18).

(5) Hook rear listing wire to wire supports (Figs. 9 and 13) and stretch material sufficiently to remove all wrinkles while maintaining front to rear alignment. The same amount of material should hang down at both sides.

(6) Insert remaining listing wires into roof side rail retainers following same cautions as in step 5.

(7) Apply cement to windshield header area and when cement becomes tacky, start at centerline area of windshield and position headlining on cemented

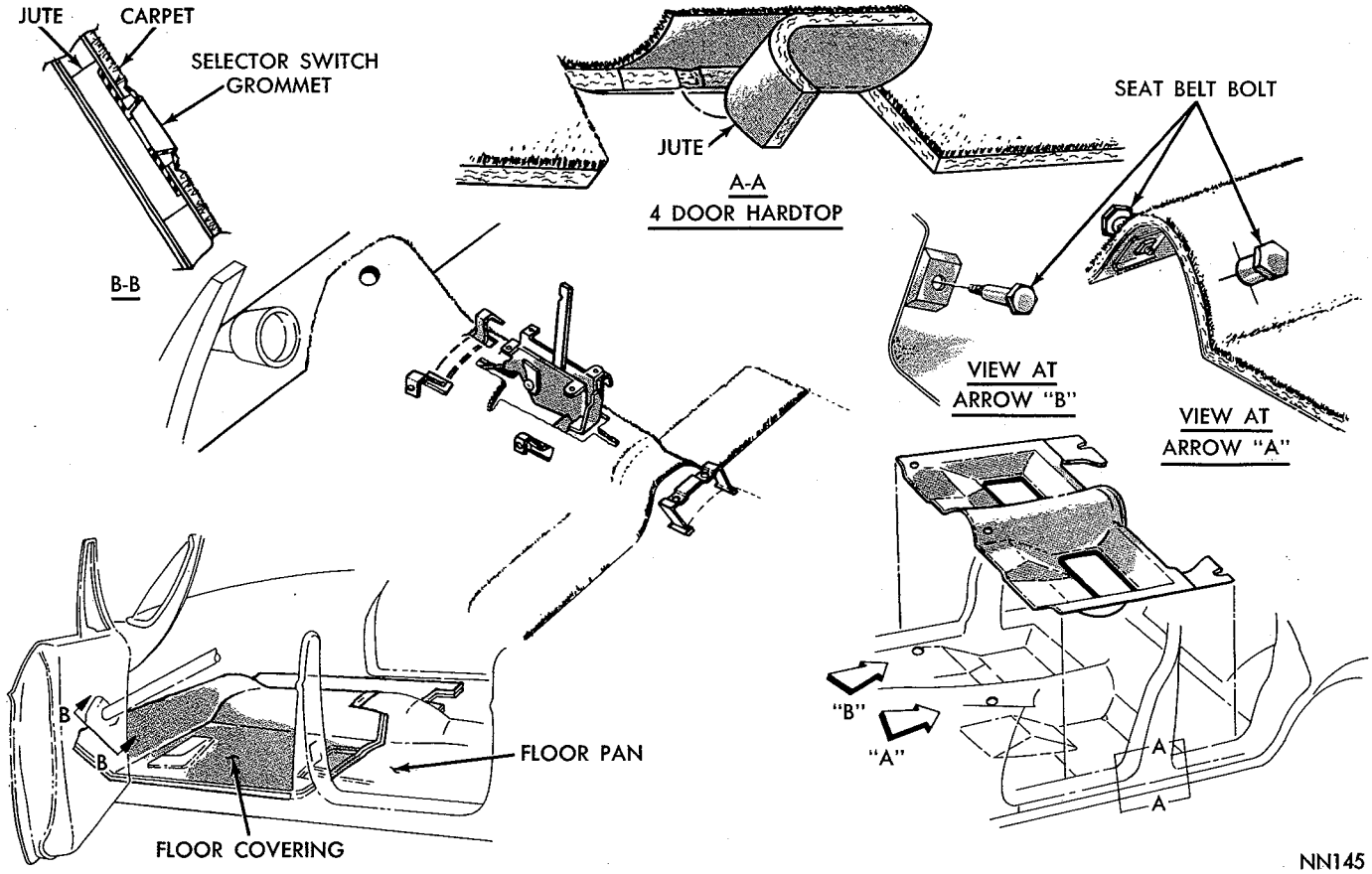


***Fig. 8—Floor Carpets and Pads***

MyMopar.com

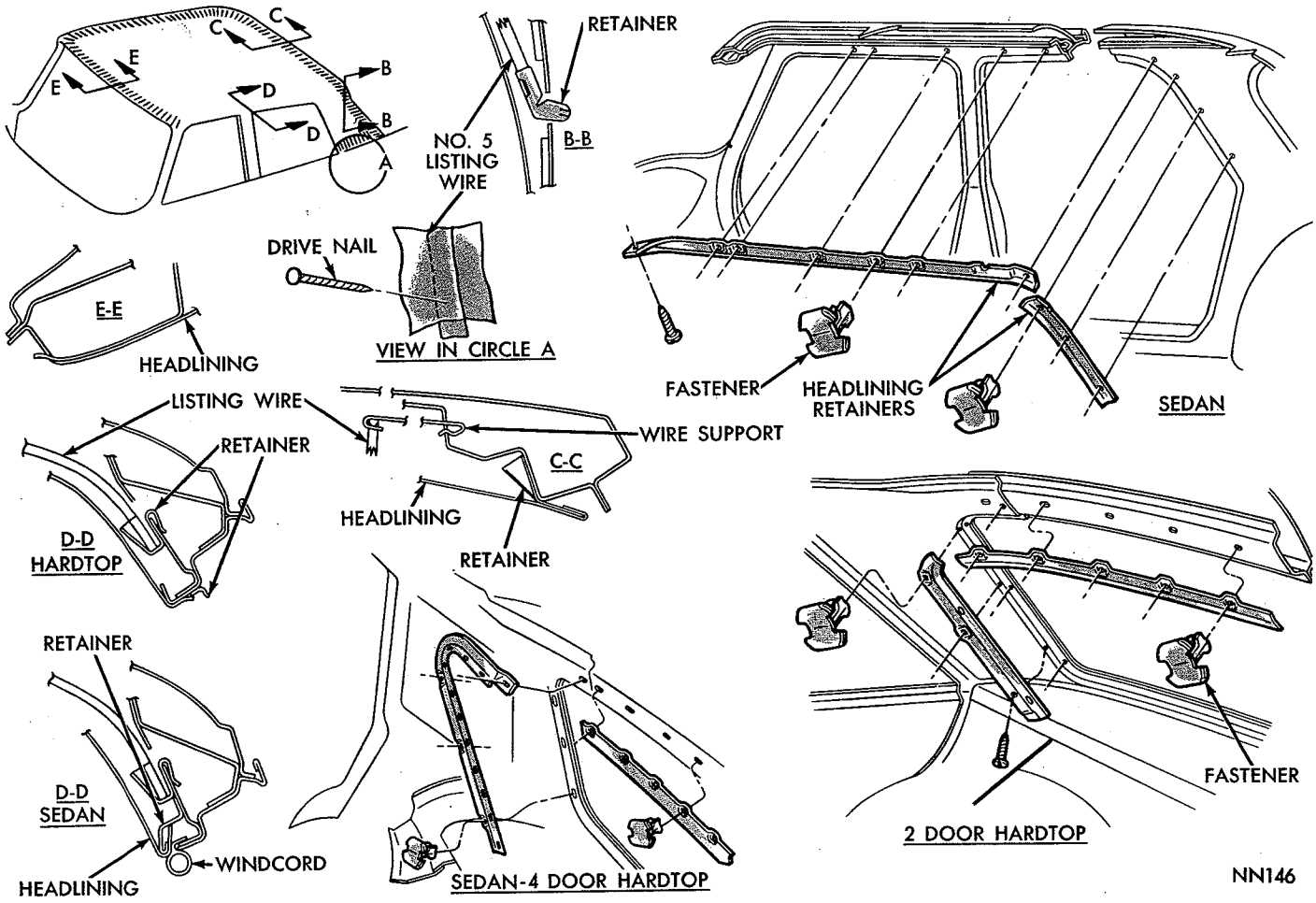


***Fig. 10—Side Rail Retainers (Fury)***

area.

(8) Using a dull putty knife, secure liner on barbs at header area, **do not install material at top of windshield posts,** making sure there are no wrinkles and fabric seam is straight.

(9) Locate sun visor mounting bracket screw hole in header and cut holes in headlining slightly large than attaching screws.

(10) Install sun visors and tuck in corners of head lining at top of windshield posts.

(11) Locate rear visor mirror bracket screw holes cut holes in fabric slightly larger than screws an

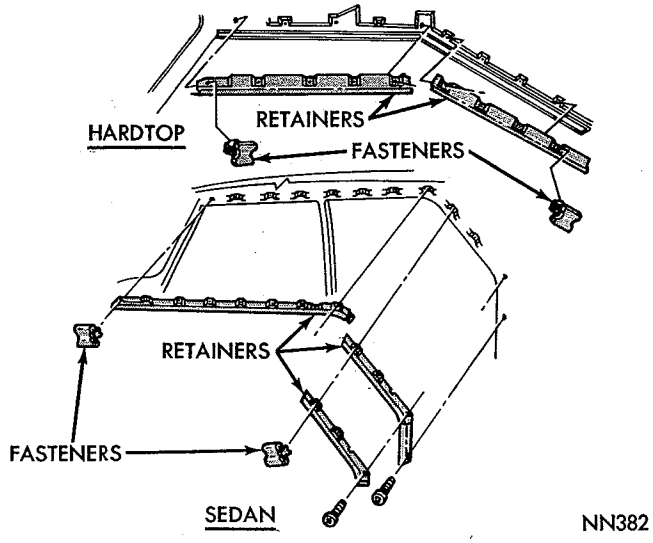


***Fig. 11—Side and Rear Retainers (Belvedere—Satellite)***

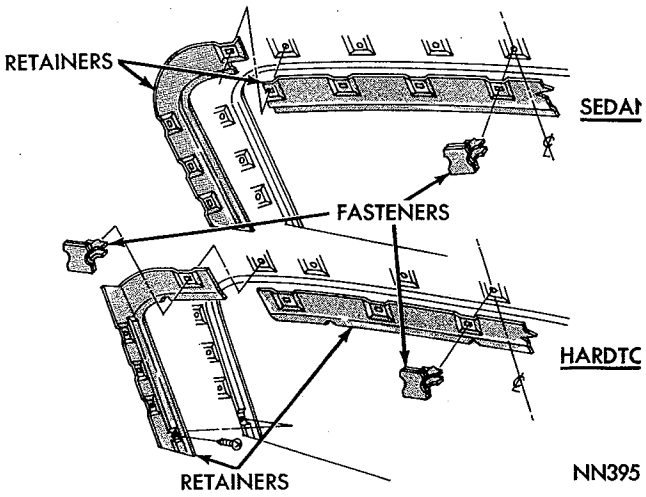


***Fig. 12—Rear Window Retainers (Belvedere—Satellite)***

MyMopar.com

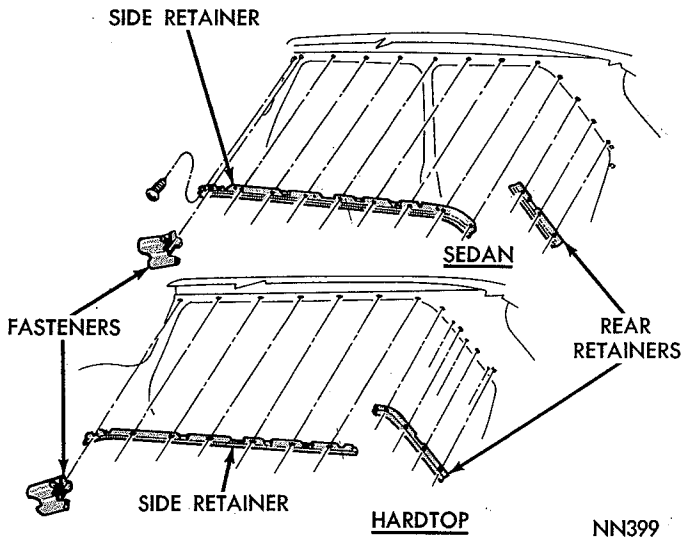


***Fig. 13—Side and Rear Retainers (Valiant)***

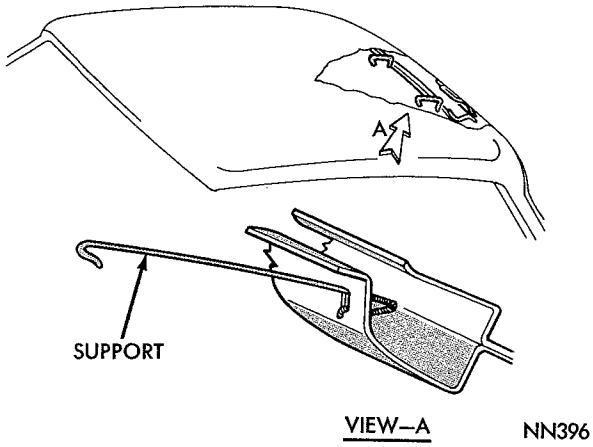


***Fig. 14—Rear Listing Wire Support (Belvedere—Satellite—Fury)***

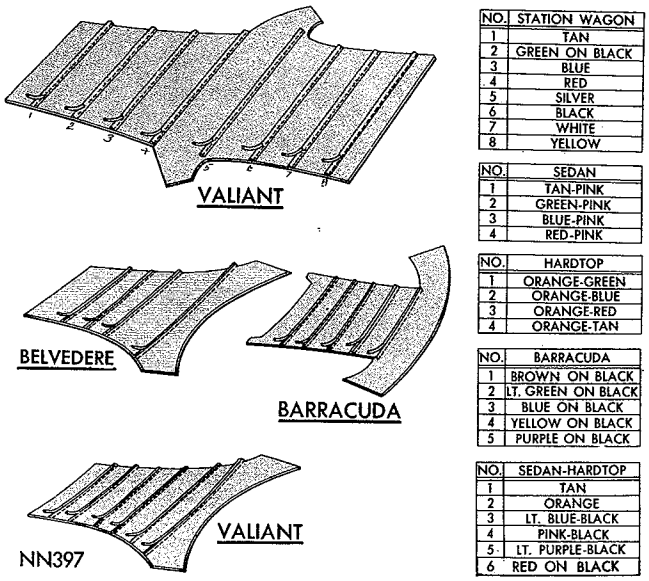


| NO. | STATION WAGON |
|---|---|
| 1 | TAN |
| 2 | GREEN ON BLACK |
| 3 | BLUE |
| 4 | RED |
| 5 | SILVER |
| 6 | BLACK |
| 7 | WHITE |
| 8 | YELLOW |

| NO. | SEDAN |
|---|---|
| 1 | TAN-PINK |
| 2 | GREEN-PINK |
| 3 | BLUE-PINK |
| 4 | RED-PINK |

| NO. | HARDTOP |
|---|---|
| 1 | ORANGE-GREEN |
| 2 | ORANGE-BLUE |
| 3 | ORANGE-RED |
| 4 | ORANGE-TAN |

| NO. | BARRACUDA |
|---|---|
| 1 | BROWN ON BLACK |
| 2 | LT. GREEN ON BLACK |
| 3 | BLUE ON BLACK |
| 4 | YELLOW ON BLACK |
| 5 | PURPLE ON BLACK |

| NO. | SEDAN-HARDTOP |
|---|---|
| 1 | TAN |
| 2 | ORANGE |
| 3 | LT. BLUE-BLACK |
| 4 | PINK-BLACK |
| 5 | LT. PURPLE-BLACK |
| 6 | RED ON BLACK |

***Fig. 15—Listing Wire Application (Belvedere—Satellite)***

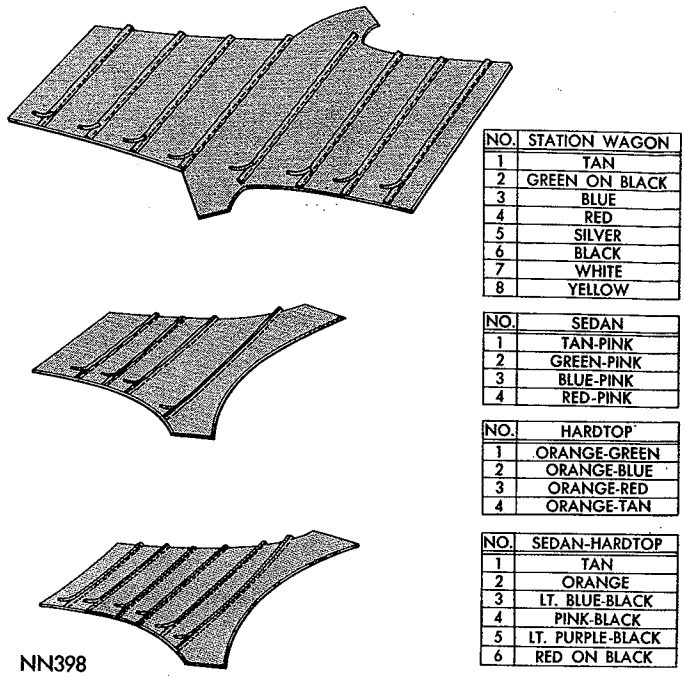


| NO. | STATION WAGON |
|---|---|
| 1 | TAN |
| 2 | GREEN ON BLACK |
| 3 | BLUE |
| 4 | RED |
| 5 | SILVER |
| 6 | BLACK |
| 7 | WHITE |
| 8 | YELLOW |

| NO. | SEDAN |
|---|---|
| 1 | TAN-PINK |
| 2 | GREEN-PINK |
| 3 | BLUE-PINK |
| 4 | RED-PINK |

| NO. | HARDTOP |
|---|---|
| 1 | ORANGE-GREEN |
| 2 | ORANGE-BLUE |
| 3 | ORANGE-RED |
| 4 | ORANGE-TAN |

| NO. | SEDAN-HARDTOP |
|---|---|
| 1 | TAN |
| 2 | ORANGE |
| 3 | LT. BLUE-BLACK |
| 4 | PINK-BLACK |
| 5 | LT. PURPLE-BLACK |
| 6 | RED ON BLACK |

***Fig. 15A—Listing Wire Application (Valiant)***

install mirror.

(12) When installing headlining at side rail retainers, work only a small section at one time to make certain seams are straight and material is free of wrinkles.

(13) Using a dull putty knife and working alternately from side to side, install headlining on side rail retainers.

(14) Apply cement at rear window opening and to quarter panel area, and after cement becomes tacky, install headlining starting at top center and working outward and down the sides.

(15) Install rear seat cushion and coat hooks.

(16) Locate dome light opening and cut out suffi-

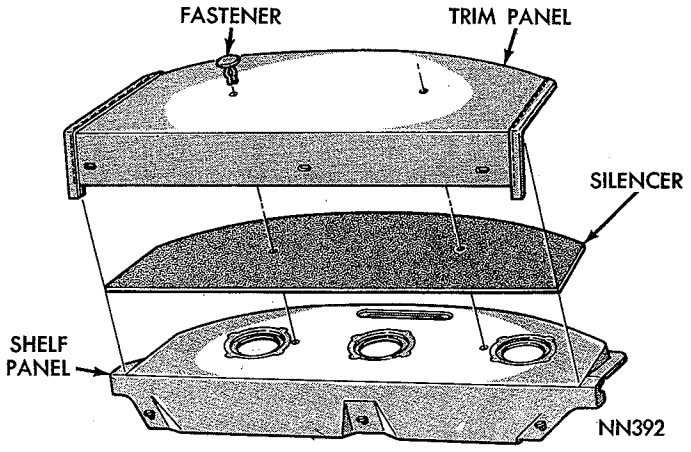


***Fig. 16—Headlining Application (Belvedere—Satellite)***

MyMopar.com

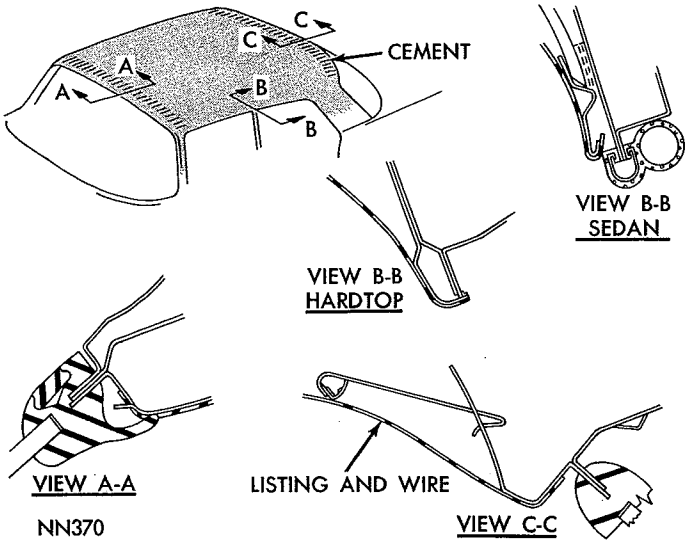


***Fig. 17—Headlining Application (Valiant—Sedan and Hardtop)***

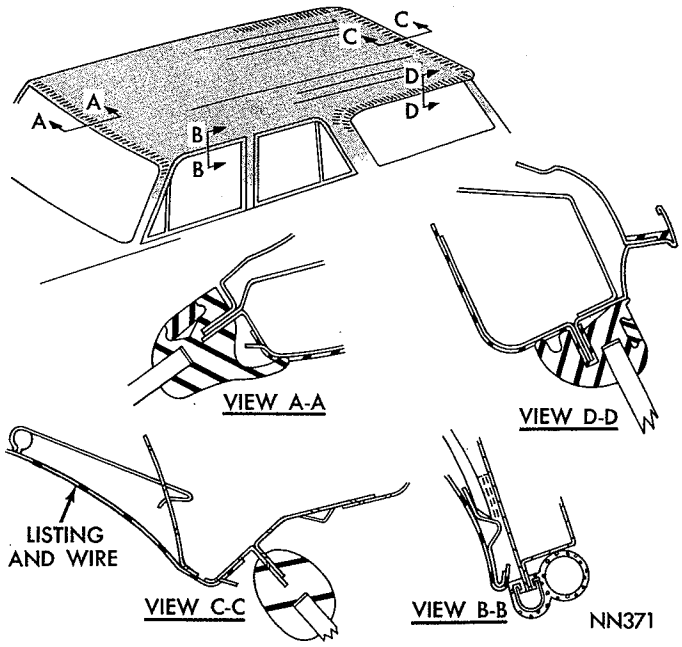


***Fig. 18—Headlining Application (Valiant—Station Wagon)***

cient material for correct lighting. Install dome lamp bezel and lens.

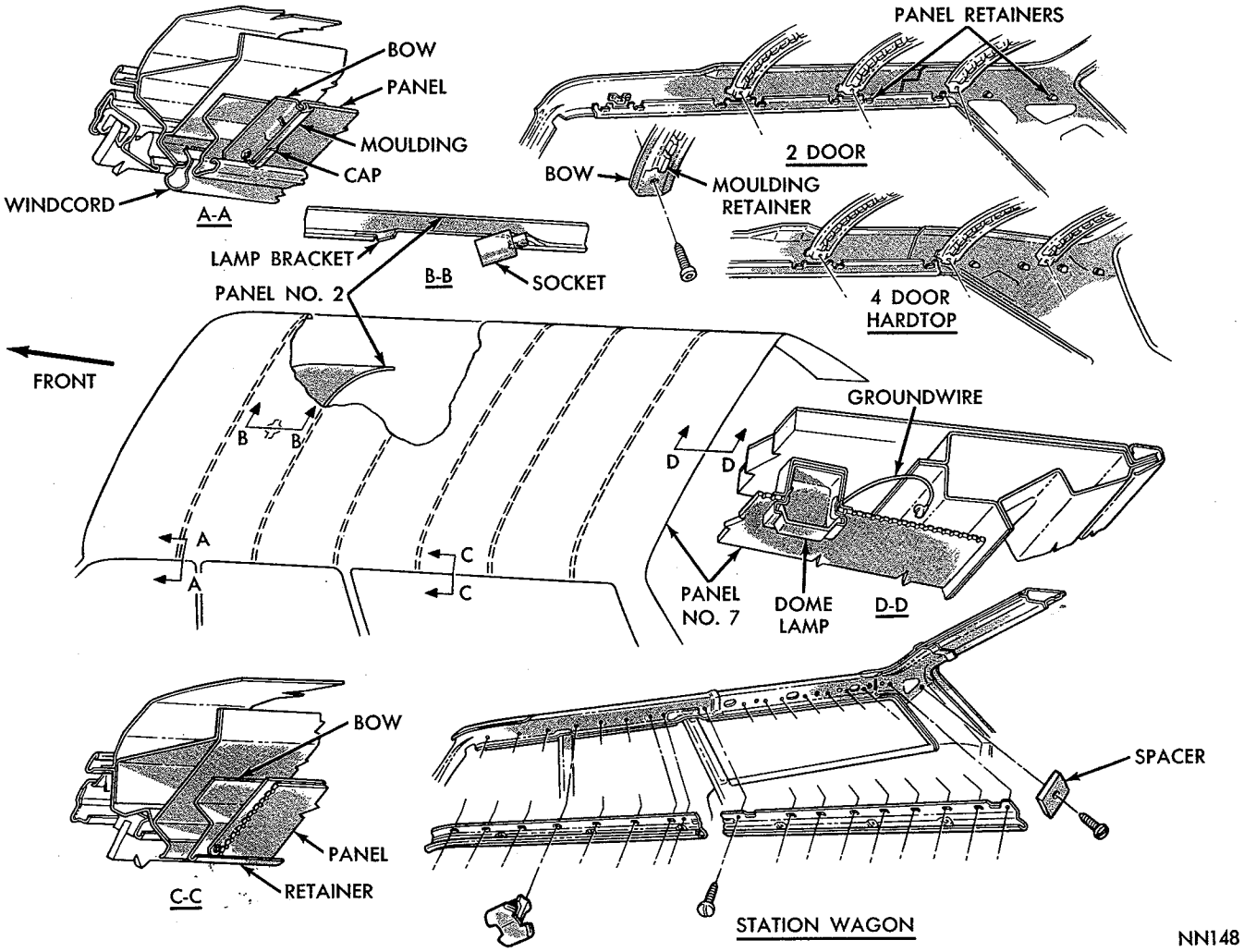


***Fig. 19—Hard Board Headlining (Fury)***

MyMopar.com

## HARD BOARD LINING

### Retainer Moulding Replacement

The individual hard board headlining sections are held in position with semi-flexible type plastic mouldings (Figs. 19 and 20) forced over the retainer sections of the roof bows. Starting at either outer end, remove end cap and pry the moulding off retainer. When installing moulding make certain it is fully seated and evenly spaced from side to side. Install end caps in retainer and over moulding ends.

## LINING SECTION

To remove either the front or rear headlining sections, remove the windshield or rear window garnish mouldings and the one bow moulding at the panel inner edge.

### Removal

(1) Remove plastic mouldings (Figs. 19 and 20) at edges of section being removed.

(2) Using a fibre tool force liner section off of roof bow and out of side retainers.

(3) Inspect liner section for damaged edges.

### Installation

(1) Position liner section on side retainers and in alignment with mating surface of roof bow.

(2) Push section up at center to seat it in side retainers.

(3) Align edges of section with moulding retainer on roof bows.

(4) Install mouldings on bow retainers and caps over ends.

### Glove Box

Valiant Models use a one piece molded type glove box (Fig. 21) which is mounted flush with the opening and is removed from the front of the instrument panel. Fury Models use a one piece folded type glove box (Fig. 22) and Belvedere-Satellite Models use a 2 piece folded type (Fig. 23) attached at the center outer areas with screws. Hinges for glove box doors are positioned through openings in instrument panel and are attached to the doors with screws (Fig. 24).

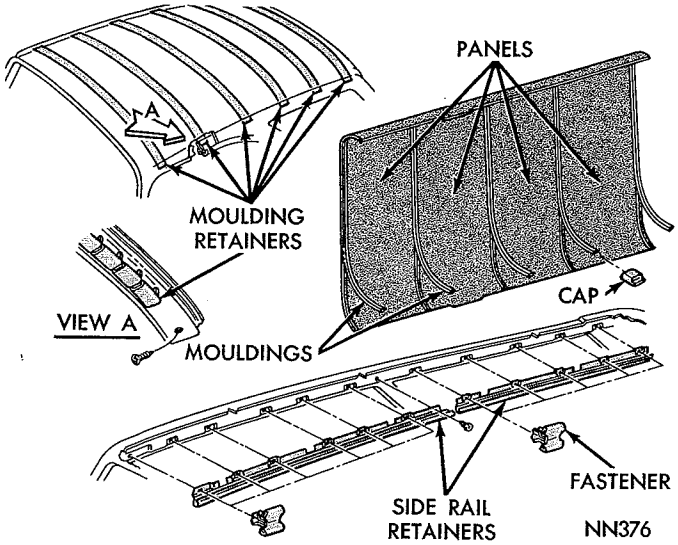


Fig. 20—Hard Board Headlining (Belvedere)

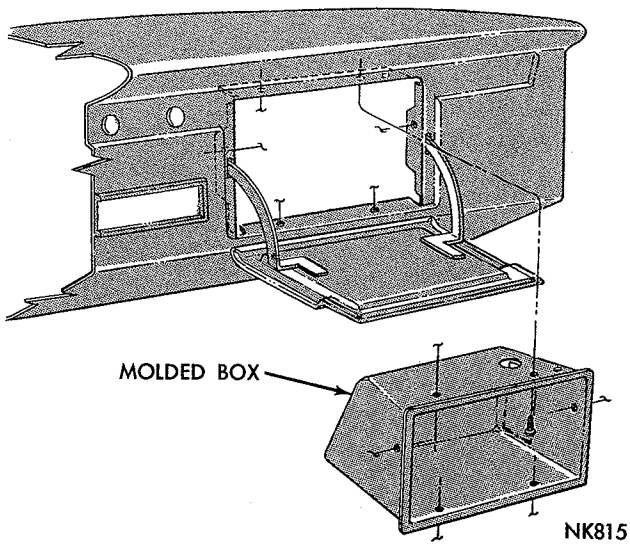


Fig. 21—Glove Box (Valiant)

### Removal

(1) Remove glove box door and hinge assembly.

(2) Remove screws attaching box to top and side areas of opening (Figs. 21 and 25).

(3) Remove glove box from under and to rear of instrument panel.

### Build-Up

(1) On Fury Models, remove gated section for light, fold box along indent lines (Fig. 22) and secure in position with staples.

(2) On Belvedere-Satellite, upper half of new glove box (Fig. 23), remove gated section for light, and attach certi card holder with staples.

(3) Bend upper half section along indent lines, and secure in position with staples.

(4) Bend lower half section (Fig. 23) along indent lines, and secure in position with staples.

(5) Position upper and lower halves together, align screw holes and install attaching screws.

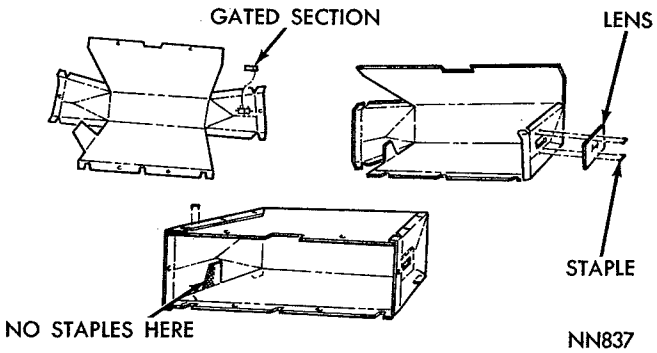


Fig. 22—Glove Box (Fury)

MyMopar.com

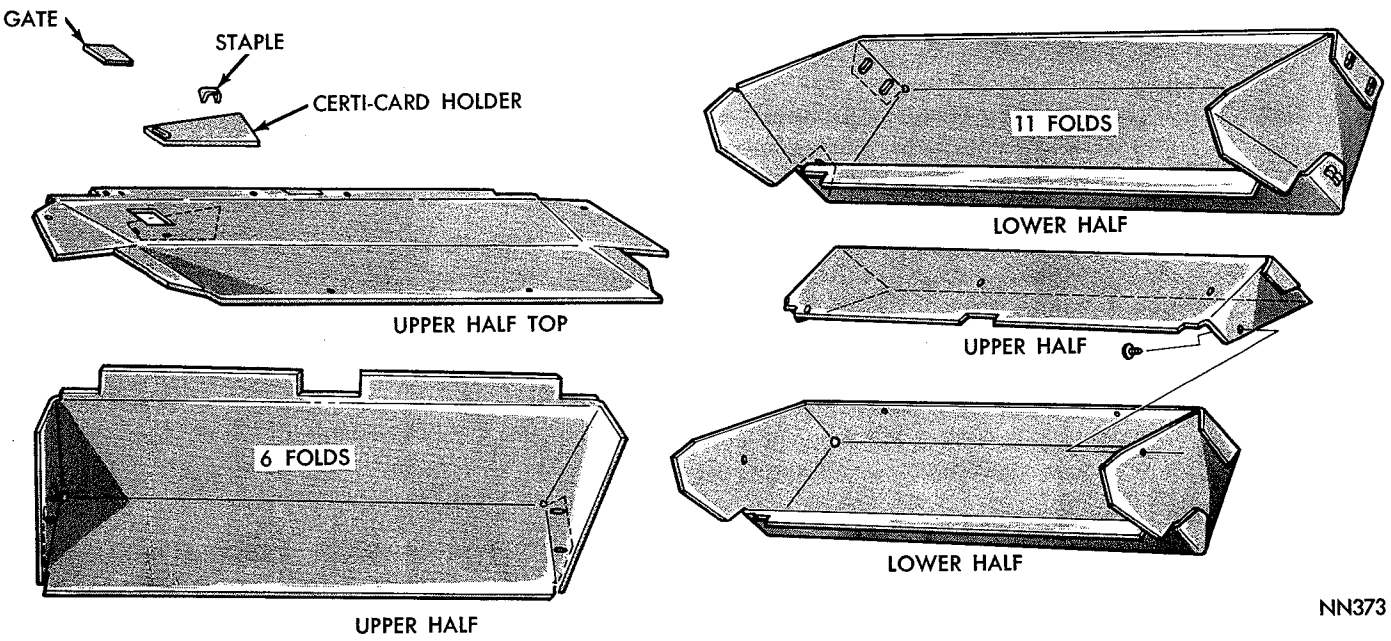


*Fig. 23—Glove Box (Belvedere—Satellite)*

### *Installation*

(1) From rear of instrument panel, position glove box in opening, making sure screw mounting holes are aligned.

(2) Install attaching screws at sides to hold in position.

(3) Install glove box door assembly and attaching screws at top.

## SHELF TRIM PANEL

### *Removal*

(1) Remove rear seat cushion and back.

(2) Remove defogger outlet and rear window side garnish mouldings.

(3) Loosen cemented end edges of trim panel (Figs. 26, 27 and 28).

(4) Raise trim panel at front and remove retainers from shelf panel.

(5) Slide trim panel forward and up to remove.

(6) Raise front edge of silencer pad and using a putty knife separate the silencer from cement. Remove silencer.

(7) Remove all cement from shelf panel.

### *Installation*

(1) Apply cement to same areas of shelf panel from which old cement was removed and install silencer pad.

(2) Install retainers in new trim panel.

(3) Slide trim panel into position and press retainers into shelf panel holes.

(4) Apply cement to shelf panel end extensions and press into position.

(5) Install defogger outlet and window side garnish mouldings and rear seat assembly.

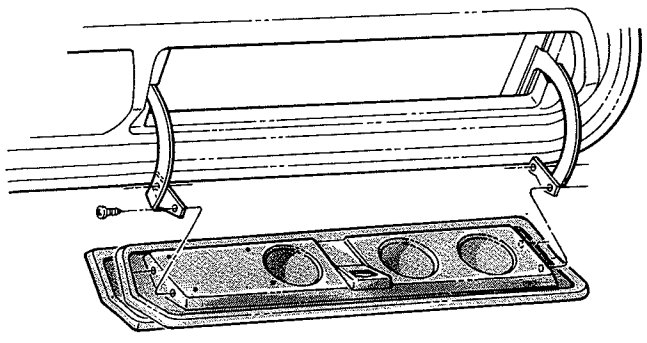


*Fig. 24—Glove Box Rear Attachment (Belvedere—Satellite)*

# SEATS

## ADJUSTMENT

The horizontal slots (Fig. 29) allow a fore or aft

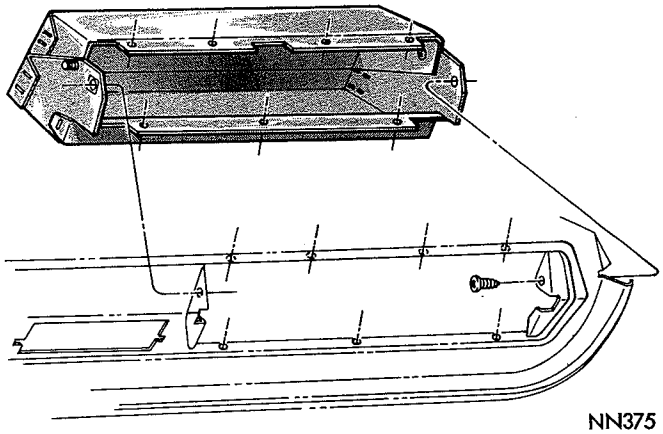


*Fig. 25—Glove Box Attachment (Belvedere—Satellite)*

MyMopar.com

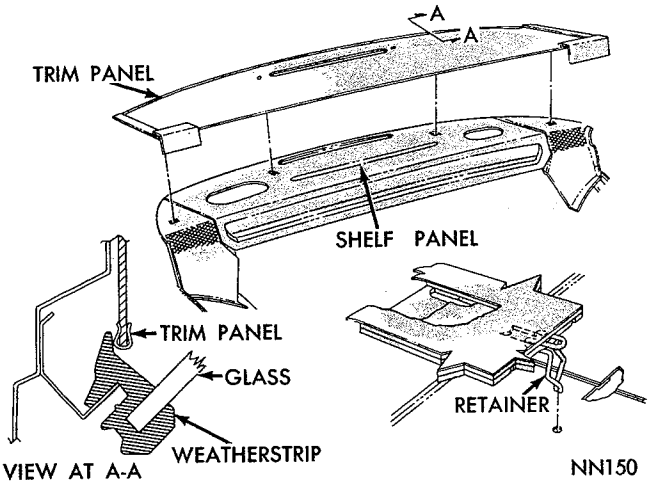


**Fig. 26—Shelf Trim Panel (Fury)**

movement of 1⅝ inches. The vertical slots allow up, down, or tilt movement of 1⅛ inches.

Loosen the four adjusting bolts (two in each seat base) and after positioning the seat as desired, tighten the bolts to lock it in place. Each seat track is attached to the seat by two studs and nuts.

## REPLACEMENT

### Front Seat

The front seat cushion is an integral part of the seat frame. All seat frames are attached to the adjusting tracks by studs and nuts, which in turn are attached to the mounting plates by bolts. To remove the seat assembly, remove the nuts, from under the floor pan, attaching the stationary plate. Manually adjusted bench type seats use mounting plates with two bolts. All other applications have four bolts.

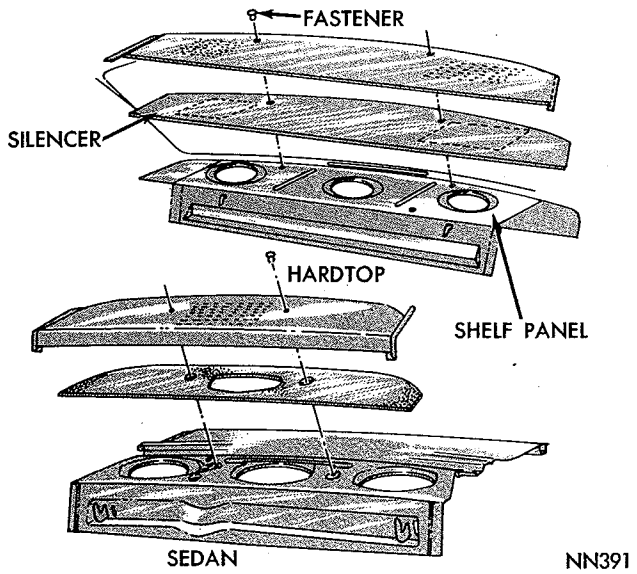


**Fig. 27—Shelf Trim Panel (Belvedere—Satellite)**

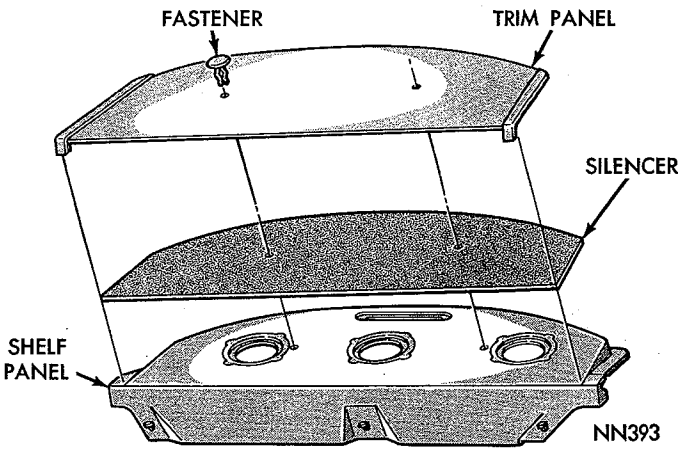


**Fig. 28—Shelf Trim Panel (Valiant)**

### Rear Seat Cushion

The rear seat cushion is held in place (Fig. 30) by inserting the rear edge of the seat cushion under the lower edge of the seat back. The front lower frame of the seat engages into a slotted bracket welded to the floor pan.

### Rear Seat Back

The rear seat back (Fig. 31) is held in place by tangs on the upper edge of the seat frame being positioned over hangers on the shelf panel. The lower edge of the seat back incorporates two metal straps which are attached to mounting brackets welded to the rear floor pan.

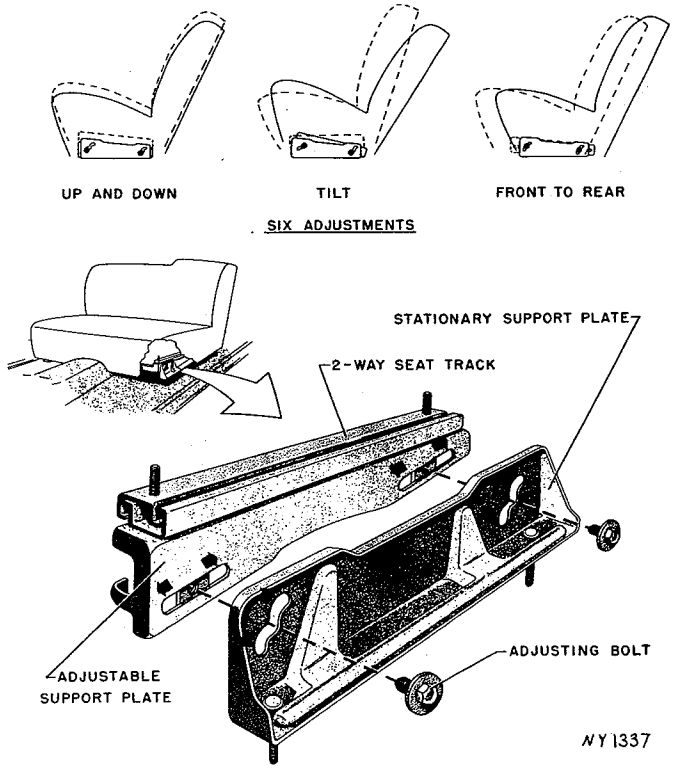


**Fig. 29—Seat Adjustment**

MyMopar.com

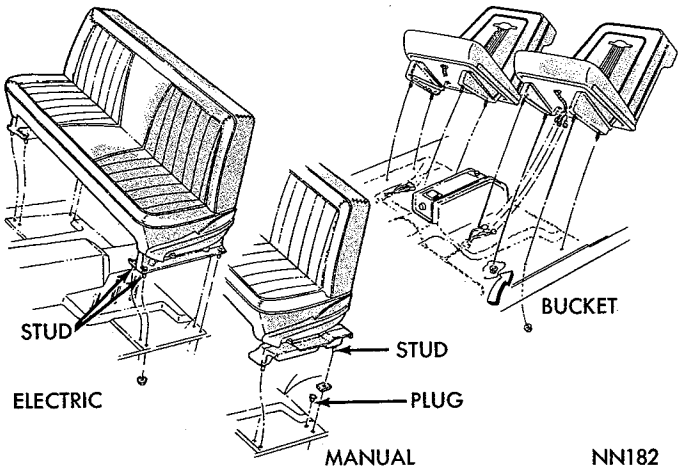


**Fig. 30—Rear Seat Cushion**

### Station Wagon—Second Back Seat

### Removal

(1) Remove screws attaching seat back to hinge assemblies (Fig. 32).

(2) Release catches from seat back and remove assembly.

### Installation

(1) Position seat back on hinge assemblies.

(2) Install hinge to seat back screws.

(3) Test engagement of seat back catches and adjust as necessary.

### Second Seat Cushion

### Removal

(1) Raise rear floor hinged panel at rear of seat cushion assembly (Fig. 33) to expose seat cushion to floor pan atttaching screws.

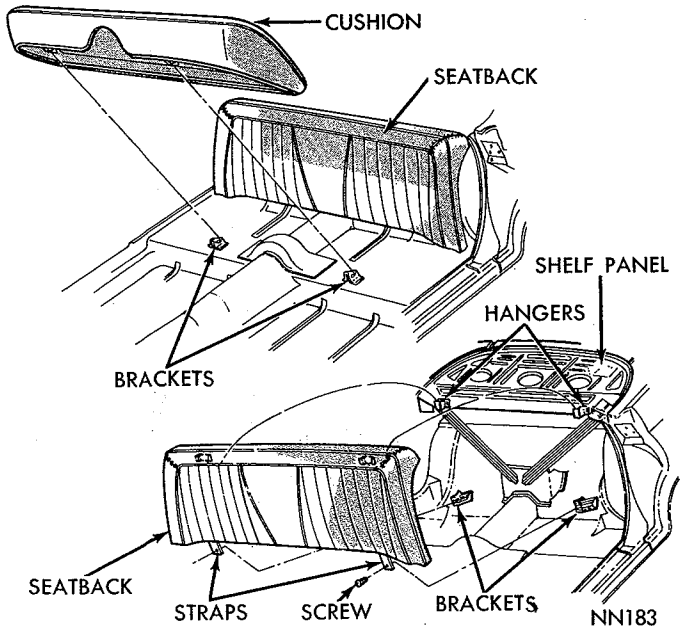


**Fig. 31—Rear Seat Back**

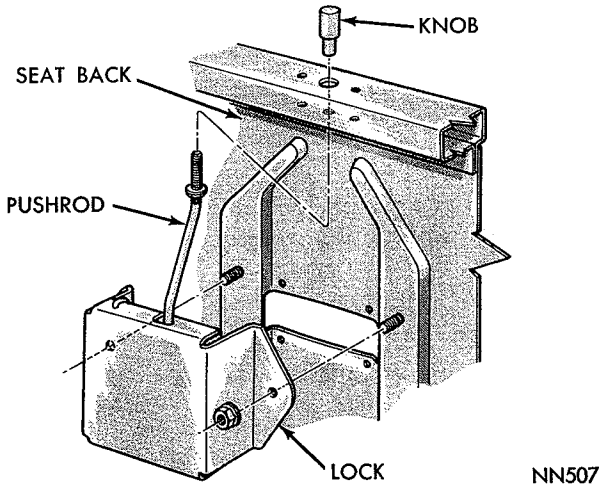


**Fig. 32—Second Seat Back**

(2) Remove screws attaching cushion to floor pan.

(3) Move cushion slightly rearward to disengage locking bars at front bottom side of cushion and remove cushion.

### Installation

(1) Place cushion in position, making certain locking bars at bottom are engaged in brackets on floor pan.

(2) Raise hinged portion of floor, at rear of seat cushion, and install screws attaching cushion mounting straps to floor pan.

### Third Seat Back

### Removal

(1) With third seat back in the UP position (Fig. 34) remove the seat hinge links screws.

(2) Remove seat back and support panel assembly.

(3) The seat back cushion is retained with screws to the seat back panel.

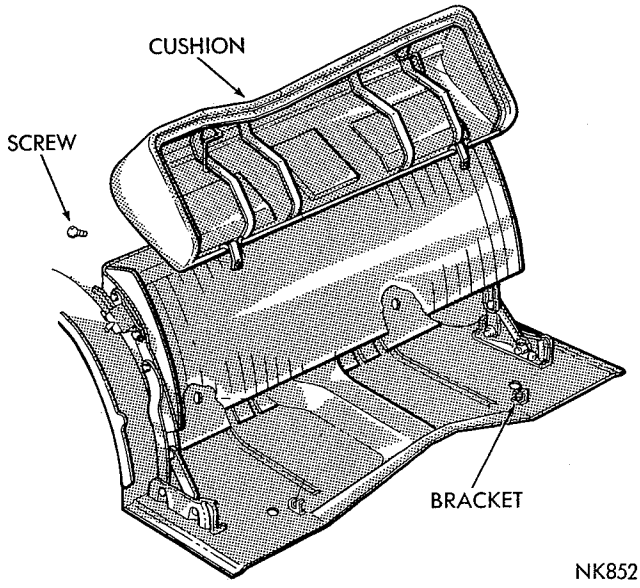


**Fig. 33—Second Seat Cushion**

MyMopar.com

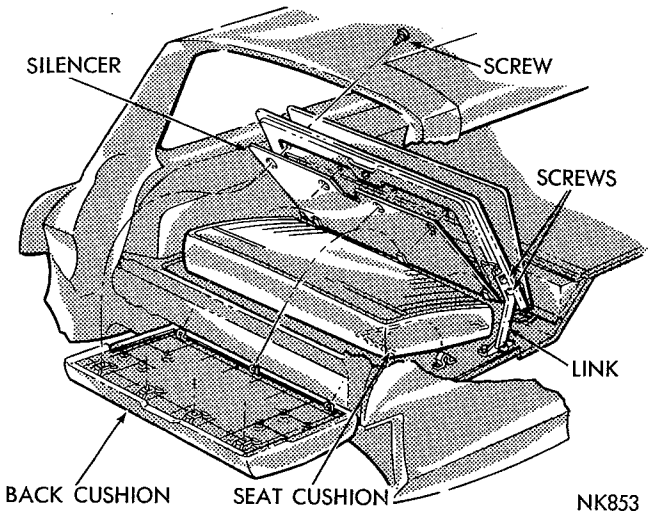


*Fig. 34—Third Seat Back and Cushion*

### Installation

(1) Position back cushion on back panel and install retainer screws.

(2) Position seat back and support panel assembly on hinge links and install retaining screws.

### Cushion

The third seat cushion (Fig. 34) is attached to hinges which in turn are attached to the quarter inner panels by screws.

### Removal

(1) Remove screws attaching hinges to quarter inner panel.

(2) Remove rear seat cushion assembly.

### Installation

(1) Position cushion assembly on rear floor pan.

(2) Install hinges on quarter inner panel and tighten securely.

(3) Test seat operation, inspect fit and alignment.

### Seat Build Up

The illustrations being used as references for the seat cushion and back build-up procedures contain circles in which numerals are inserted. These circles also have a reference line to certain areas of the unit. The numerals within the circles designate the area referred to by the procedure step number being read.

Normally, only the cover will be replaced. In those instances make certain the spring pad (where used) and pad cover are centered on the spring and are attached correctly.

### Front Seat Cushion

### Fury I Sedan (Fig. 35)

### Spring Pad

(1) Front—Attach to the 3rd vertical bar of 1st, 3rd and 5th intermediate element, [6] hog rings.

(2) Front—Attach to the 2nd vertical bar of center elements, [2] hog rings.

(3) Sides—Attach to top rim, [3] hog rings—each side equally spaced.

(4) Rear—Attach with cover pad to 10th bar of each intermediate element, [11] hog rings.

(5) Rear—Attach with cover pad to 8th bar of each center element, [3] hog rings.

### Cover

(6) Front and Sides—Attach to each slot in frame assembly, [6] hog rings—right side, [7] hog rings—left side (electric seat).

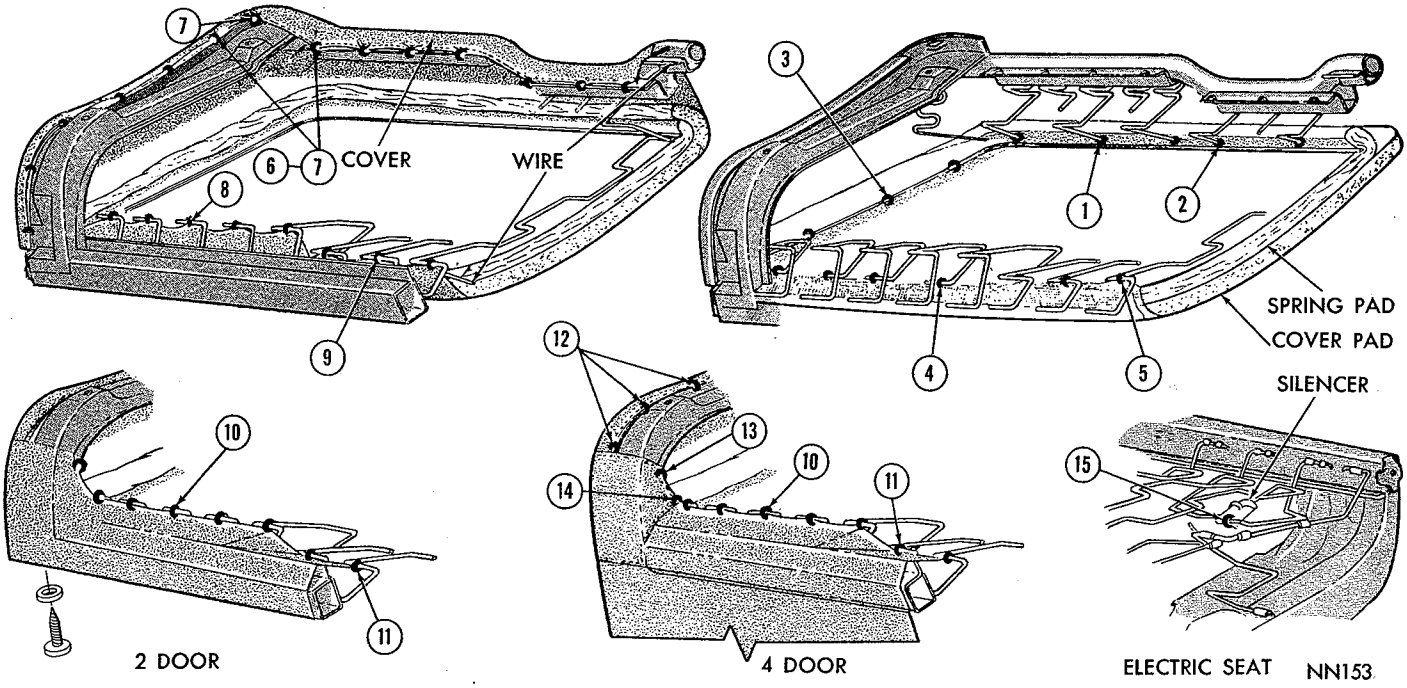


*Fig. 35—Front Seat Cushion (Fury I)*

MyMopar.com

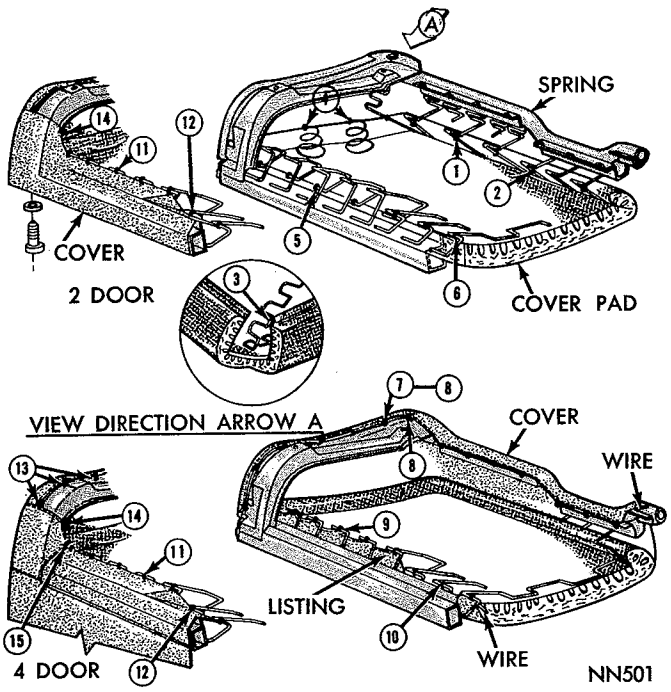


*Fig. 36—Front Seat Cushion Sedan and Station Wagon (Fury II)*

(7) Sides—Attach to each trim tab in frame assembly, [7] hog rings each side (manual seat), [1] hog ring each side (electric seat).

### Listings

(8) Rear—Attach to the 12th bar of each intermediate element, [11] hog rings.

## Fury II (Sedan and Station Wagon) (Fig. 36)

### Cover Pad

(1) Front—Attach to 4th vertical bar of 1st, 3rd and 5th intermediate elements, [6] hog rings.

(2) Front—Attach to 2nd vertical bar of center elements [2] hog rings.

(3) Sides—Attach to 12th loop of end elements, [1] hog ring each side.

(4) Sides—Attach to 3rd turn of each coil, [2] hog rings each side.

(5) Rear—Attach to 10th bar of each intermediate element, [11] hog rings.

(6) Rear—Attach to 8th bar of each center element, [3] hog rings.

### Cover

(7) Front—Attach to each frame slot, [12] hog rings.

(8) Sides—Attach to each trim tab in frame, [7] hog rings each side.

(9) Rear—Attach to 12th bar of each intermediate element, [11] hog rings.

(10) Listing—Attach to 8th bar of each center element at rear, [3] hog rings.

(11) Rear—Attach to 12th bar of each intermediate element, [11] hog rings.

(12) Rear—Attach to 8th bar of each center element, [3] hog rings.

(13) Seat back side facing—Attach to slots, or attach trim tabs to cushion outer frame, [3] hog rings each side.

(14) Lower side facing—Attach to bottom slot in cushion inner frame, [1] hog ring each side.

(15) Lower side facing—Attach to 12th bar of 1st element, [1] hog ring each side.

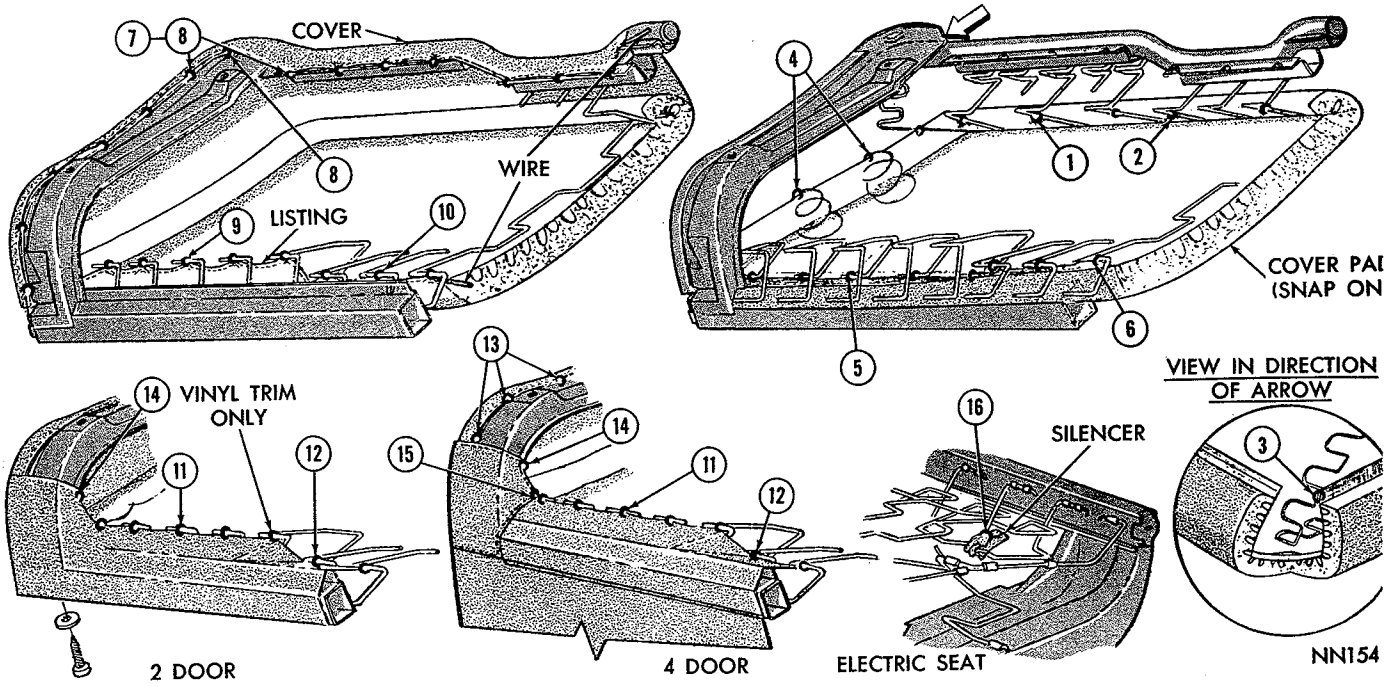


*Fig. 37—Front Seat Cushion Hardtop—Convertible (Fury II and III)*

MyMopar.com

### *Fury II and III (Hardtop-Convertible) (Fig. 37)*

#### *Cover Pad*

(1) Front—Attach to 4th vertical bar of 1st, 3rd, and 5th intermediate element, [6] hog rings.

(2) Front—Attach to 2nd vertical bar of center elements, [2] hog rings.

(3) Sides—Attach to 12th loop of end elements, [1] hog ring each side.

(4) Sides—Attach to 3rd turn of each coil, [2] hog rings each side.

(5) Rear—Attach to 10th bar of each intermediate element, [11] hog rings.

(6) Rear—Attach to 8th bar of each center element, [3] hog rings.

#### *Cover*

(7) Front and Sides—Attach to each slot in frame assembly, [12] hog rings—front, [6] hog rings—right side, [7] hog rings—left side (electric seat).

(8) Sides—Attach to each trim tab in frame assembly, [7] hog rings each side (manual seat), [1] hog ring each side (electric seat).

#### *Listing*

(9) Rear—Attach to 12th bar of each intermediate element, [11] hog rings.

(10) Rear—Attach to 8th bar of each center element, [3] hog rings.

### *Fury Bucket Seat Cushion (Fig. 38)*

#### *Pad Support*

(1) Front—Attach to 2nd bar of end and 1st intermediate elements, [4] hog rings.

(2) Sides—Attach to top rim, [6] hog rings equally spaced.

(3) Rear—Attach to 3rd bar of 1st intermediate element, [2] hog rings.

#### *Top Rim Pad*

(4) Front—Attach to top rim, [4] hog rings equally spaced.

(5) Sides—Attach to top rim, [4] hog rings, each side, equally spaced.

#### *Cover Pad*

(6) Front—Attach to holes in frame, [6] hog rings.

(7) Sides—Attach to holes and tabs, [7] hog rings.

(8) Rear—Attach to 4th bar of 1st, 3rd and 5th intermediate elements, [3] hog rings.

#### *Listing*

(9) Sides—Attach listings, [3] hog rings each side.

#### *Cover*

(10) Front—Attach to frame holes, [6] hog rings.

(11) Sides—Attach to frame and tabs, [7] hog rings.

(12) Rear—Attach to 4th bar of intermediate elements, [5] hog rings.

### *Belvedere—Satellite (Fig. 39)*

#### *Spring or Cover Pad*

(1) Front—Attach to top rim, [7] hog rings equally spaced.

(2) Sides—Attach to top rim, [3] hog rings each side spaced equally.

(3) Rear—Attach cover pad to every element, [13] hog rings.

#### *Cover*

(4) Inside listing—Attach to each element, [13] hog rings.

(5) Front—Attach to each slot pin bottom frame, [11] hog rings.

(6) Sides—Attach to each slot in bottom frame, [7] hog rings each side.

(7) Rear—Attach to each element, [13] hog rings.

(8) Rear inner facing (2 door)—Attach to slot in bottom frame, [1] hog ring each side.

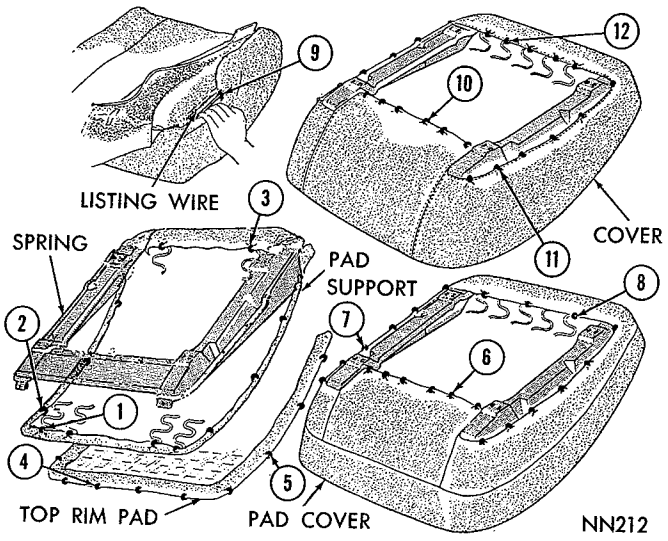


*Fig. 38—Bucket Seat Cushion—Fury and Sport Fury*

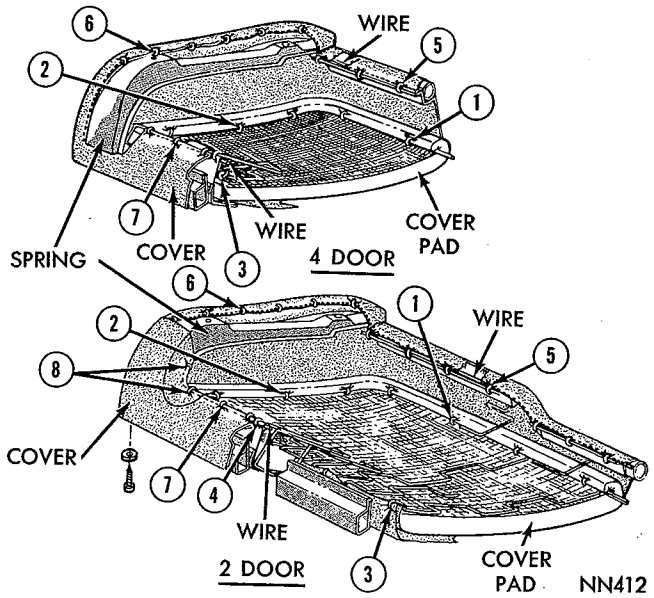


*Fig. 39—Front Seat Cushion (Belvedere—Satellite)*

MyMopar.com

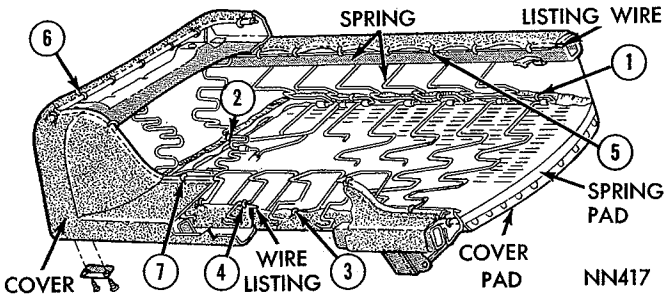


**2 Door**

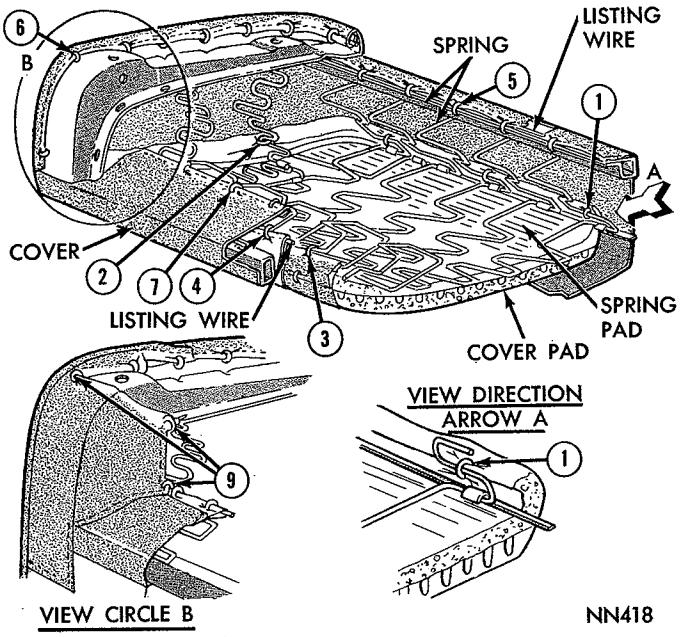


***Fig. 40—Front Seat Cushion (Valiant) 4 Door***

### *Valiant (Fig. 40)*

#### *Spring Pad*

(1) Front—Attach to every other spring, [7] hog rings.

(2) Sides—Attach to jack spring, [2] hog rings each side.

(3) Rear—Attach with cover pad to every other spring, [12] hog rings.

#### *Cover*

(4) Inside listing—Attach to each spring, [12] hog rings.

(5) Front—Attach to each slot in bottom frame, [11] hog rings.

(6) Sides—Attach to each slot in bottom frame, [7] hog rings each side.

(7) Rear—Attach to each spring, [10] hog rings.

(8) Rear facing ends (2 door models)—Attach to slots in bottom frame, [2] hog rings each end. On 4 door models, attach side facing ends.

### *Belvedere—Satellite—Valiant Bucket Seat (Fig. 41)*

#### *Pad Support*

(1) Front—Attach to outside top rim, [3] hog rings.

(2) Sides—Attach to outside top rim, [3] hog rings each side.

(3) Rear—Attach to 5th bar of all intermediate elements, [5] hog rings.

#### *Top Rim Pad*

(4) Front—Attach to outside top rim, [6] hog rings.

(5) Sides—Attach to outside top rim, [5] hog rings each side.

#### *Cover Pad*

(6) Front—Attach to spring frame holes, [3] hog rings, and [1] hog ring each tab.

(7) Sides—Attach to spring frame holes, [4] hog rings each side.

(8) Rear—Attach to 3rd bar of 1st, 3rd, 5th intermediate element [1] hog ring each.

#### *Cover Listing*

(9) Front—(Signet)—Attach to listing wire, [4] hog rings.

(10) Sides—(Signet-Satellite)—Attach to listing wires, [4] hog rings each side.

## REAR SEAT CUSHION

### *Fury—2 Door Sedan (Fig. 42)*

#### *Pad Support*

(1) Front—Attach to top rim, [5] hog rings equally

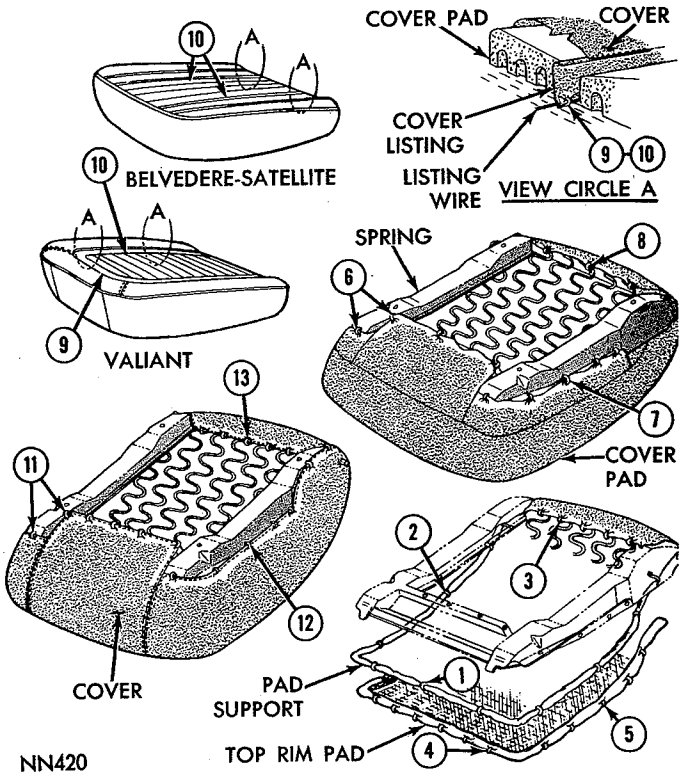


***Fig. 41—Bucket Seat Cushion (Belvedere—Satellite—Valiant)***

MyMopar.com

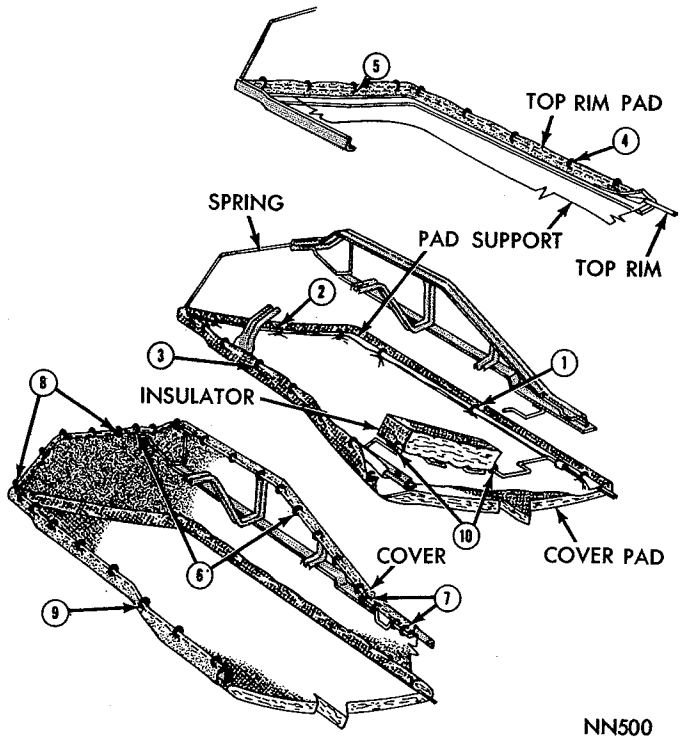


*Fig. 42—Rear Seat Cushion—Fury 2 Door Sedan*

spaced.

(2) Sides—Attach to top rim, [3] hog rings each side equally spaced.

(3) Rear—Attach with cover pad to each slot in rear spring retainer, [15] hog rings.

### Top Rim Pad

(4) Front—Attach to top rim, [9] hog rings equally spaced.

(5) Sides—Attach to top rim, [4] hog rings each side.

### Cover

(6) Front and Sides—Attach to each slot in bottom frame, [23] hog rings.

(7) Front—Attach to support brace center, [4] hog rings equally spaced.

(8) Sides—Attach to semi-bottom, [5] hog rings each side equally spaced.

(9) Rear—Attach to each slot in rear spring retainer, [15] hog rings.

(10) **Insulator**—Attach to 10th and 15th bar of 10th element, [4] hog rings.

## Fury—4 Door Sedan and Hardtop (Fig. 43)

### Pad Support

(1) Front and Sides—Attach to top rim, [15] hog rings equally spaced.

(2) Rear—Attach with cover pad to each slot in retainer, [15] hog rings equally spaced.

(3) **Insulator**—Attach to 10th and 15th bar of center elements, [4] hog rings.

(4) **Top Rim Pad**—Front and Sides—Attach to top rim, [15] hog rings equally spaced.

### Cover

(5) Front and Sides—Attach to each slot in bottom frame, [26] hog rings hardtop models, [28] hog rings sedan models.

(6) Front—(Hardtop)—Attach to each slot in spring retainer, [2] hog rings.

(7) Rear—Attach to each slot in spring retainer, [15] hog rings.

(8) **Silencer Pad**—Attach to top rim helper spring, [4] hog rings each side

## Fury II—2 Door Hardtop (Fig. 44)

Prior to installation of spring pad attach silencer pad to top rim with [4] hog rings per silencer. See view at Arrow "A."

### Spring Pad

(1) Front—Attach to 10th loop in 2nd row of elements, [2] hog rings.

(2) Front—Attach to 6th bar in 4th, 6th and 8th row of elements, [6] hog rings.

(3) Front—Attach to 4th bar in 10th row of elements, [2] hog rings.

(4) Sides—Attach to top rim, [6] hog rings [3] each side equally spaced.

(5) Rear—Attach to each slot in rear spring retainer, [15] hog rings.

### Cover

(6) Front and Sides—Attach to each slot in bottom frame, [14] hog rings.

(7) Front—Attach to trim brace, [11] hog rings equally spaced.

(8) Front—Attach to retainer, [1] hog ring.

(9) Sides—Attach to semi-bottom rim, [5] hog rings each side equally spaced.

(10) Rear—Attach to each slot in spring retainer, [17] hog rings.

### Insulator

(11) To 8th and 13th bar in 10th row of elements, [4] hog rings.

## Fury II—Convertible (Fig. 45)

### Spring Pad

Prior to installation of spring pad attach silencer to top rim [4] hog rings per silencer. See view at Arrow "A."

Insulator to 8th and 13th bar in 10th row of elements [4] hog rings. See circle "A."

#### Spring Pad

(1) Front—Attach to the 6th bar of the 1st, 3rd and 5th intermediate element each side and to the 4th bar of the 2nd center element each side with [8] hog rings.

(2) Sides—Attach to top rim, [3] hog rings each side equally spaced.

(3) Rear—Attach to each slot in retainer, [3] hog

MyMopar.com

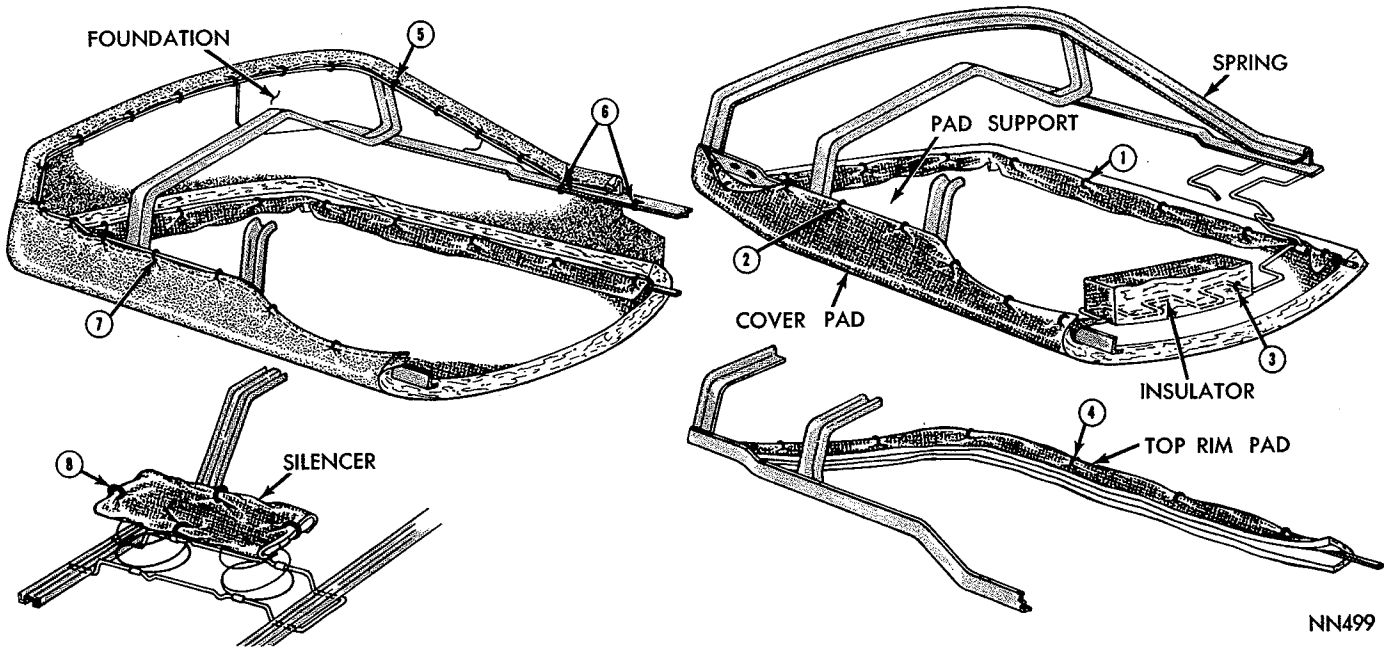


*Fig. 43—Rear Seat Cushion Fury 4 Door Sedan and Hardtop*

rings.

(4) Front—Attach to trim brace, [12] hog rings.

### Cover

(5) Front—Attach to retainer, [1] hog ring.

(6) Sides—Attach to semi-bottom rim, [5] hog rings each side equally spaced.

(7) Rear—Attach to each slot in rear retainer, [15] hog rings.

(8) Front and Sides—Attach to each slot in bottom frame, [10] hog rings.

### Fury III and Sport Fury—2 Door Hardtop and Convertible (Fig. 46)

### Pad Support

(1) Front—Attach to top rim, hog rings equally spaced, hardtop [8] Fury III, [10] Sport Fury, [5] Convertible.

(2) Sides—Attach to top rim, [4] hog rings each side.

(3) Rear—With cover pad, attach to each slot in spring retainer, [15] hog rings Fury III Hardtop, [13] hog rings Convertible.

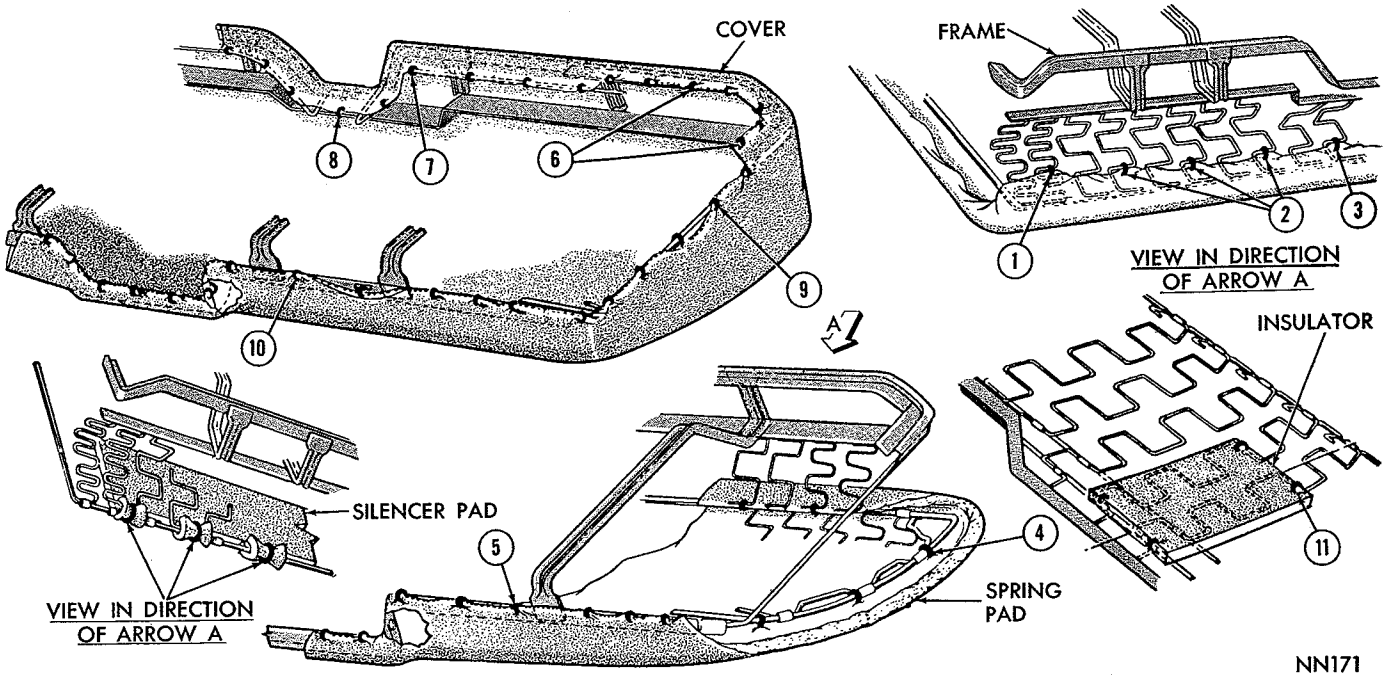


*Fig. 44—Rear Seat Cushion—Fury II—2 Door Hardtop*

MyMopar.com

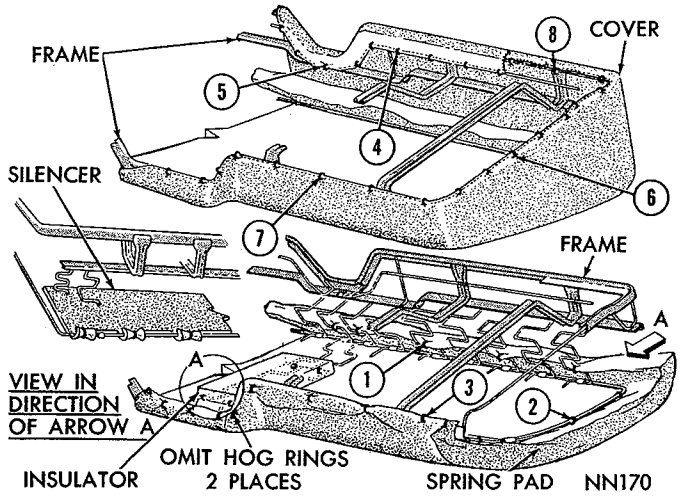


*Fig. 45—Rear Seat Cushion—Fury 11 Convertible*

(3A) Rear—Sport Fury Hardtop—With cover pad, attach to top rim, [10] hog rings equally spaced.

### Top Rim Pad

(4) Front—Attach on top rim [9] hog rings equally spaced, Sport Fury Hardtop, [10] hog rings.

(5) Sides—Attach to top rim, [4] hog rings each side.

### Cover

(6) Front and Sides—Attach to each slot in bottom frame, Sport Fury Hardtop [32], Fury III Hardtop [23], Convertible [17] hog rings.

(7) Front—Attach to trim slots in spring retainer, Convertible [4], Fury III Hardtop [3] hog rings.

(8) Sides—Attach to semi-bottom rim, [5] hog rings each side equally spaced.

(9) Rear—Attach to each slot in rear spring retainer, [15] hog rings, [17] Fury III Hardtop.

(10) **Silencer**—Attach to top rim, [4] hog rings each silencer.

(11) **Insulator**—Attach to 8th and 13th bar of 1st center element on right side and 2nd center element on left side, [4] hog rings.

(12) Foundation—Attach to support braces, [2] hog rings each foundation.

## Fury Station Wagon—2nd Seat (Fig. 47)

### Pad Support

(1) Front—Attach to top rim, [5] hog rings equally spaced.

(2) Sides—Attach to top rim, [3] hog rings each side.

(3) Rear—Attach with cover pad to each slot in rear retainer (one operation) [18] hog rings.

### Top Rim Pad

(4) Sides—Attach to top rim, [9] hog rings equally spaced.

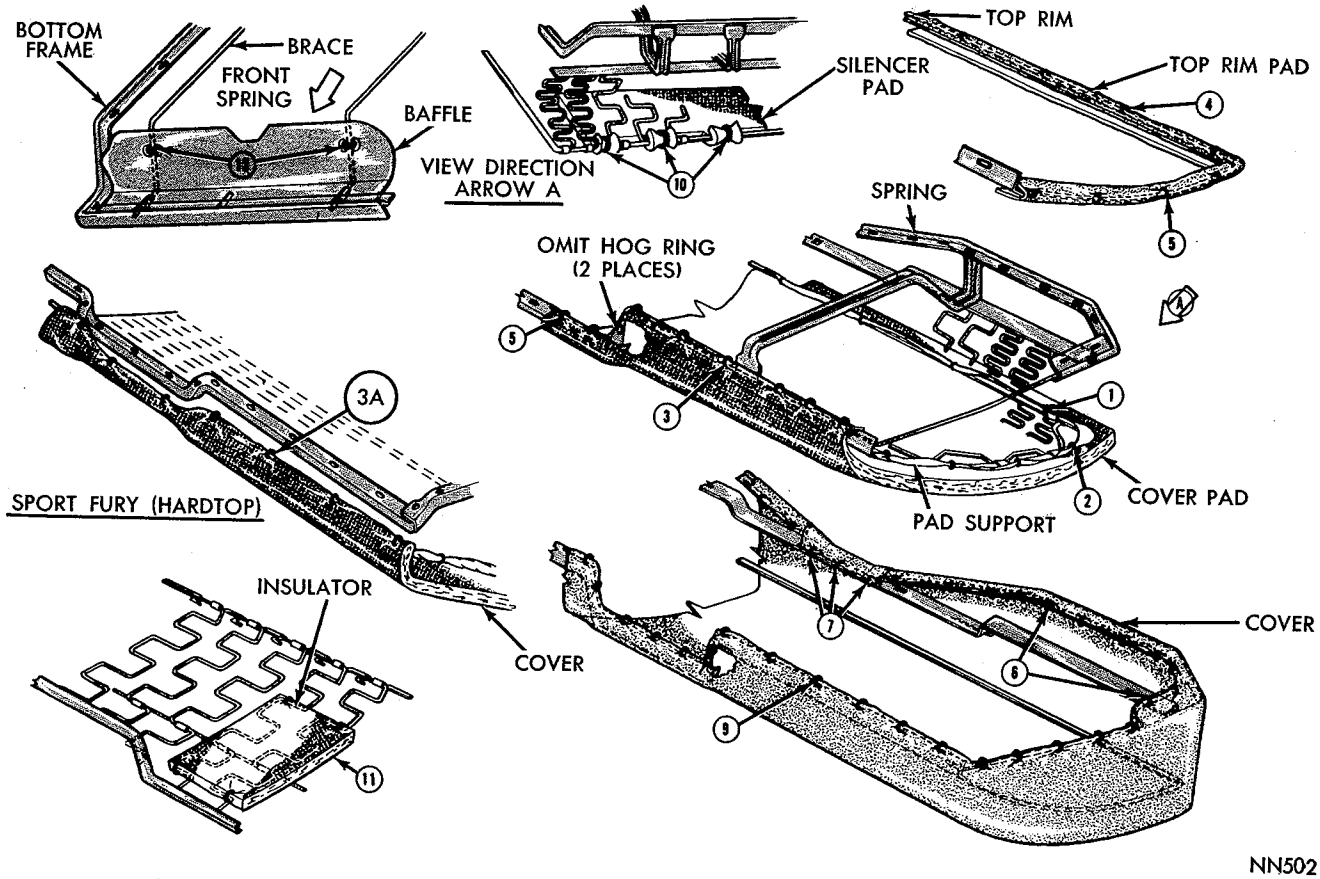


*Fig. 46—Rear Seat Cushion Fury III—Sport Fury 2 Door Hardtop and Convertible*

MyMopar.com

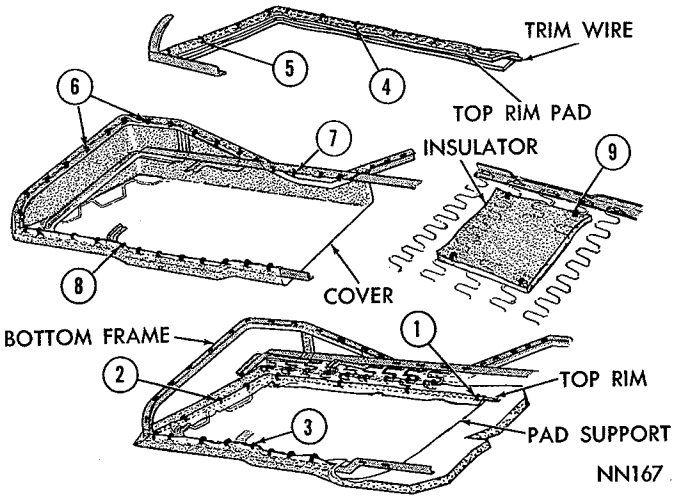


*Fig. 47—Station Wagon 2nd Seat Cushion—Fury*

(5) To top rim, [8] hog rings [4] each side equally spaced.

**Cover**

(6) Front and Sides—Attach to each slot in bottom frame, [27] hog rings.

(7) Front—Attach to retainer, [4] hog rings.

(8) Rear—Attach to each slot in retainer, [18] hog rings.

**Insulator**

(9) Attach center to the 4th and 16th loop of the 8th element from rear, [4] hog rings.

### *Fury—3rd Seat (Fig. 48)*

**Pad Support**

(1) Attach to top rim, [4] hog rings-front, [4] hog rings [2] each side and [4] hog rings rear.

### *Top Rim Pad*

(2) Front and Sides—Attach to top rim, [7] hog rings-front and [3] hog rings each side equally spaced.

### *Cover Pad*

(3) Rear—Attach to the 9th loop of the 1st, 3rd and 5th element, [6] hog rings.

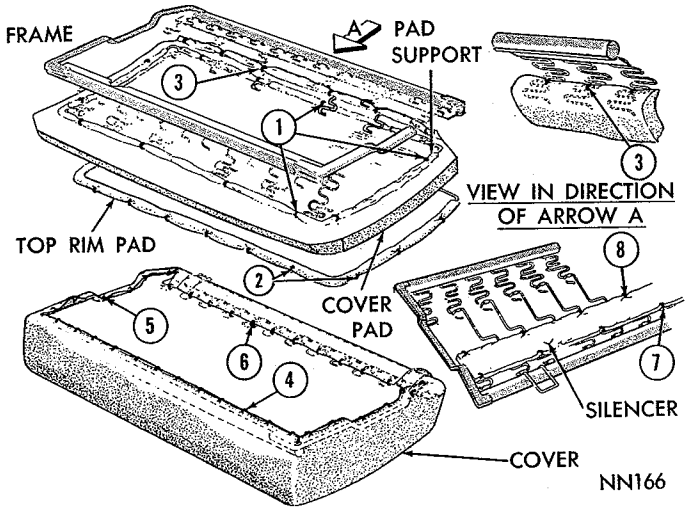


*Fig. 48—Station Wagon 3rd Seat Cushion—Fury*

**Cover**

(4) Front—Attach to each slot in bottom retainer, [12] hog rings.

(5) Sides—Attach to each slot in J-rim, [6] hog rings each side.

### *Belvedere—2 Door Sedan (Fig. 49)*

### *Spring Pad*

(1) Front—Attach to 4th bar of 1st, 3rd, 5th intermediate elements, [1] hog ring each, for each side and [1] hog ring to 2nd center element.

(2) Side—Attach to top rim, [3] hog rings each side.

(3) Rear—Attach to spring frame retainer slots, [2] hog rings.

**Cover**

(4) Front and Sides—Attach to frame slots, [28] hog rings.

(5) Rear—Attach to retainer slots, [2] hog rings.

### *Insulator*

(6) Front—Attach to 8th bar of 1st element, [1] hog ring each side.

(7) Rear—Attach to 13th bar of 1st element, [1] hog ring each side.

### *Foundation Board*

(8) Attach to frame slots, [2] hog rings (taxi only).

### *Belvedere—4 Door Sedan Station Wagon (Fig.50)*

### *Pad Support*

(1) Front and Sides—Attach to top rim, [11] hog rings equally spaced.

(2) Rear—Attach to retainer slots, [2] hog rings (attach cover pad at some time—Step 4).

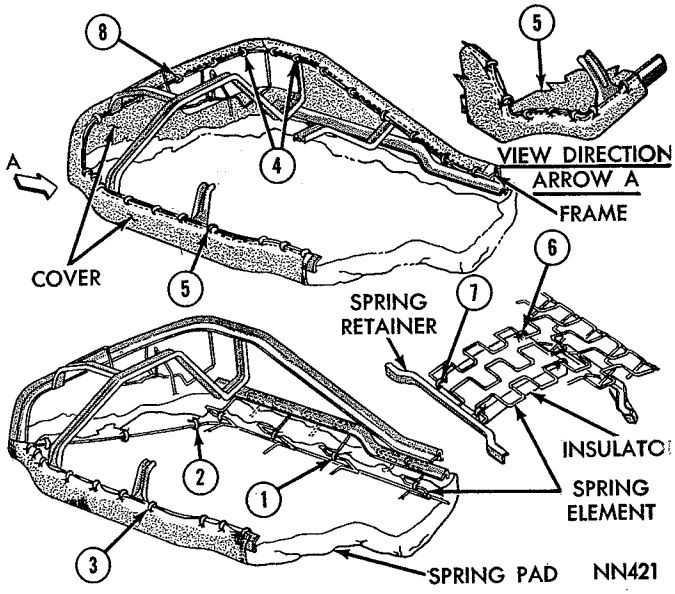


*Fig. 49—Rear Seat Cushion—Belvedere 2 Door Sedan*

MyMopar.com

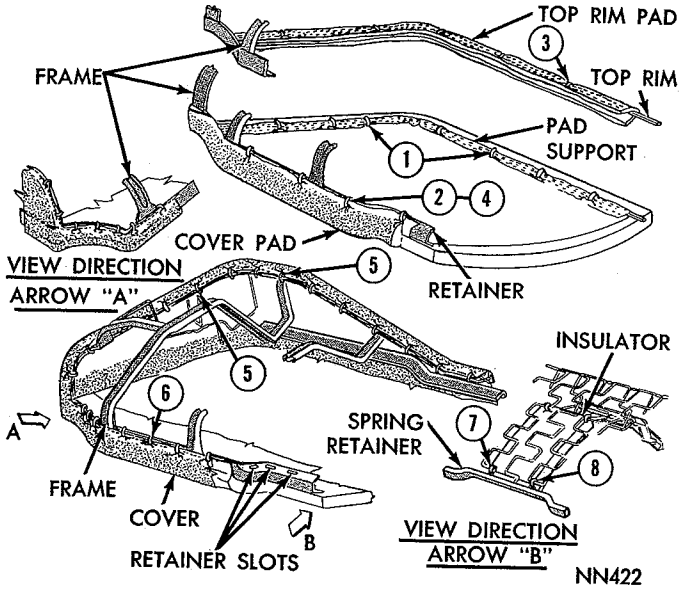


*Fig. 50—Rear Seat Cushion—Belvedere—4 Door Sedan and Station Wagon*

### Top Rim Pad

(3) Front and Sides—Attach to top rim, [11] hog rings equally spaced.

### Cover Pad

(4) Rear—Attach with pad support to retainer slots.

### Cover

(5) Front and Sides—Attach to spring frame slots, [28] hog rings.

(6) Rear—Attach to retainer slots, [21] hog rings.

### Insulator

(7) Front—Attach to 8th bar of 1st element, [1] hog ring each side (View Arrow "B").

(8) Rear—Attach to 13th bar of 1st element, [1] hog ring each side (View Arrow "B").

## Belvedere—3rd Seat (Fig. 51)

### Spring Pad

(1) Front—Attach to top rim, [6] hog rings equally spaced.

(2) Sides—Attach to top rim, [3] hog rings each side equally spaced.

(3) Rear—Attach to 9th bar of each intermediate spring elements [10] hog rings.

### Cover

(4) Front—Attach to spring retainer holes, [11] hog rings (See Note in illustration).

(5) Sides—Attach to spring retainer slots, [6] hog rings each side.

(6) Rear—Attach to spring retainer holes, [9] hog rings and to the 3rd bar of the end and 2nd intermediate element, [4] hog rings.

### Silencer

(7) Front—Attach to 2nd bar of the 1st, 3rd, 5th spring element, [5] hog rings.

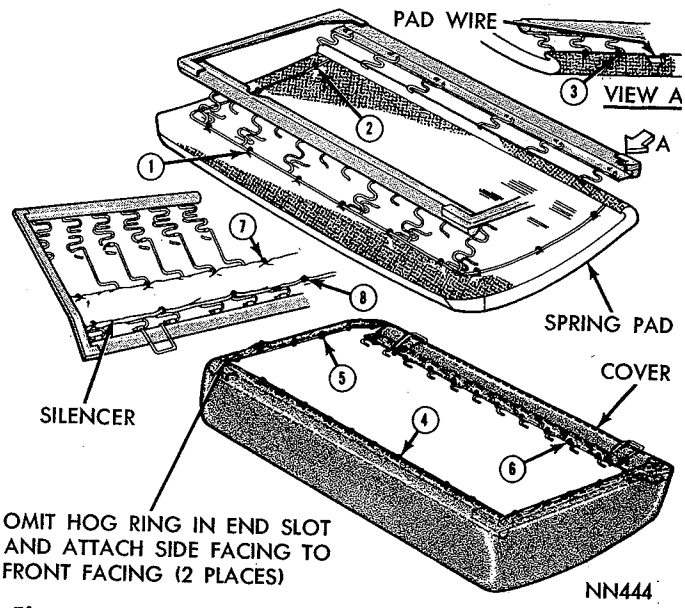


*Fig. 51—Station Wagon 3rd Seat Cushion—Belvedere*

(8) Rear—Attach to 4th loop every other spring element, [7] hog rings.

## Belvedere—Satellite—2 Door Hardtop (Fig. 52)

### Pad Support

(1) Front—Attach to top rim, [5] hog rings equally spaced.

(2) Sides—Attach to top rim, [3] hog rings each side equally spaced.

(3) Rear—(with cover pad, Step 6). Attach to retainer slots, [13] hog rings.

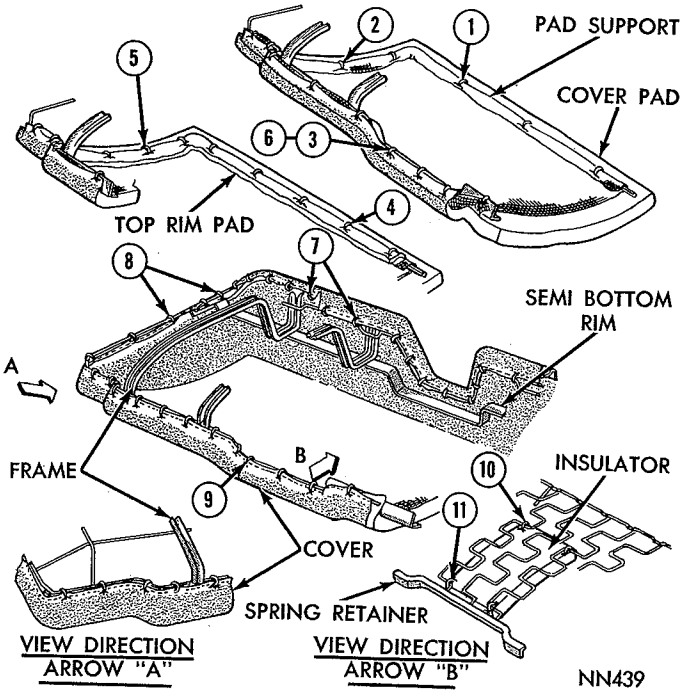


*Fig. 52—Rear Seat Cushion—Belvedere—Satellite 2 Door Hardtop*

MyMopar.com

### Top Rim Pad
(4) Front—Attach to top rim, [9] hog rings equally spaced.
(5) Sides—Attach to top rim, [4] hog rings each side equally spaced.

### Cover Pad
(6) Rear—Attach with pad support (Step 3).

### Cover
(7) Front—Attach to spring frame slots, [5] hog rings each side and to trim brace, [12] hog rings.
(8) Sides—Attach to spring frame slots, [2] hog rings each side and to same bottom rim [3] hog rings each side.
(9) Rear—Attach to frame retainer slots, [2] hog rings.

### Insulator
(10) Front—Attach to 8th bar of 1st center element, [1] hog ring each side.
(11) Rear—Attach to 13th bar of 1st center element, [1] hog ring each side.

## Belvedere—Satellite—Convertible (Fig. 53)
The procedures for convertible models are the same as for two door hardtop models with the following modification.

### Pad Support
Sides—[4] hog rings each side—Rear—[16] hog rings.

### Cover Pad
Front—Attach to trim brace, [15] hog rings equally spaced.

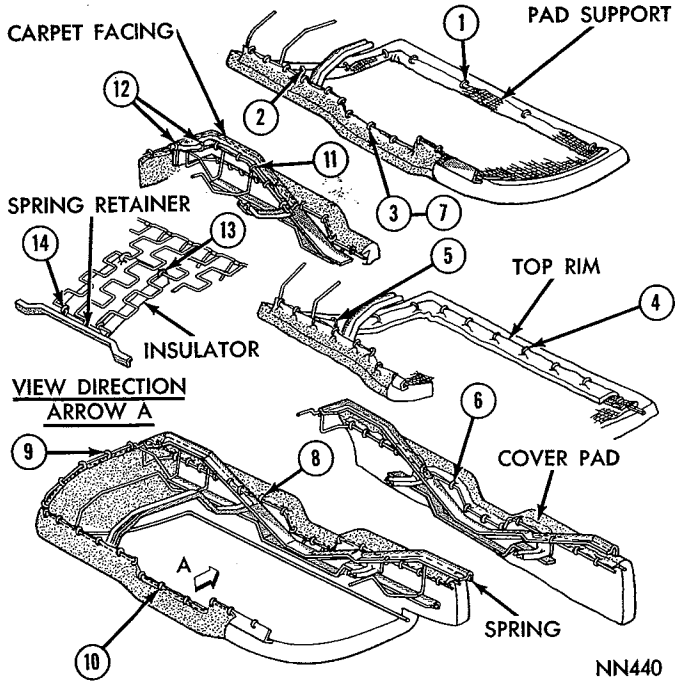


Fig. 53—Rear Seat Cushion—Belvedere Satellite Convertible

### Cover
Front—Attach to trim brace, [19] hog rings equally spaced—Sides—Attach to semi bottom rim, [6] hog rings each side equally spaced—Rear—[16] hog rings.

### Foundation Board
(1) Front—Attach to spring frame slots, [5] hog rings each side.
(2) Sides—Attach to spring frame slots, [1] hog ring each side and semi bottom rim, [1] hog ring each side.

## Valiant—Sedan and Hardtop (Fig. 54)
### Insulator
(1) Attach to tension braces at center of spring, [4] hog rings (See View Arrow "Y").

### Spring Pad
(2) Front—Attach to spring frame [5] hog rings (See View Arrow "Z").
(3) Sides—Attach to top rim, [2] hog rings each side.
(4) Rear—Attach to each slot in retainer, [7] hog rings.
(5) Rear Ends—Attach to top rim, [1] hog ring each end (See View Arrow "A").

### Cover Pad
(6) When cover pad is used, attach with rear of spring pad (Step 4).

### Cover
(7) Front—Attach to center trim brace and each slot in bottom retainer, [15] hog rings.
(8) Sides—Attach to each slot in bottom retainer, [5] hog rings each side.
(9) Rear—Attach to each slot in retainers, [9] hog

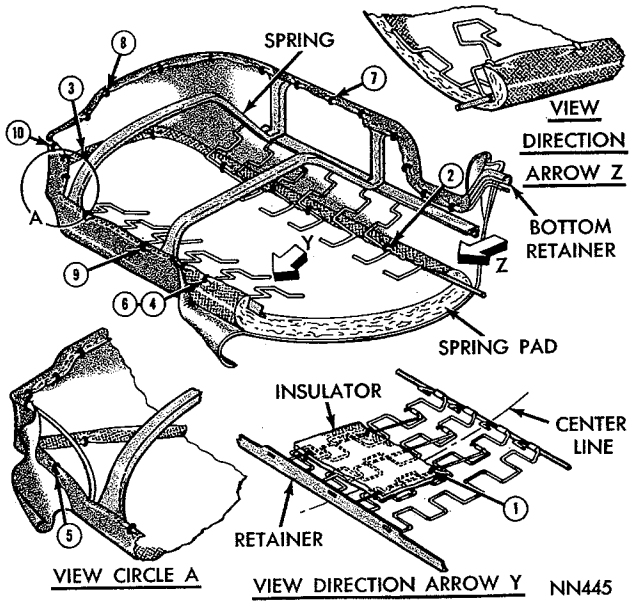


Fig. 54—Rear Seat Cushion—Valiant Sedan Hardtop

MyMopar.com

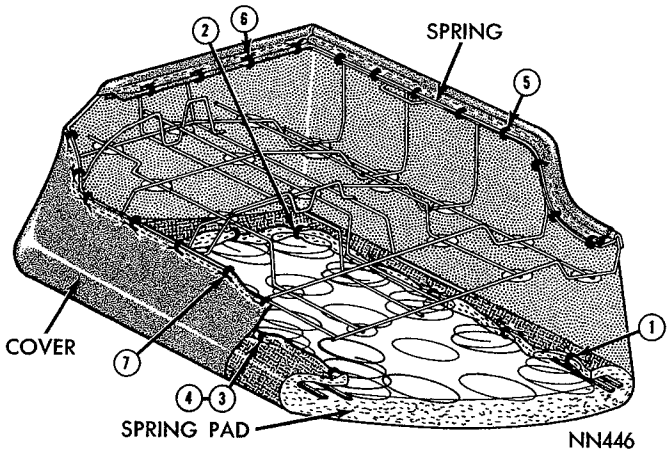


*Fig. 55—Rear Seat Cushion—Valiant Convertible*

rings.

(10) Rear Ends—Attach to semi bottom rim, [4] hog rings each end.

### Valiant—Convertible (Fig. 55)

#### Spring Pad

(1) Front—Attach to 2nd turn of each coil, [9] hog rings.

(2) Sides—Attach to 2nd turn of each coil, [3] hog rings each side.

(3) Rear—Attach to 2nd turn of each coil, [9] hog rings.

#### Rubber Pad

(4) Rear—Attach, when used, with rear spring pad (Step 3).

#### Cover

(5) Front—Attach to each slot in bottom frame [16] hog rings.

(6) Sides—Attach to each slot in bottom frame, [4] hog rings each side.

(7) Rear—Attach to bottom rim, [16] hog rings equally spaced.

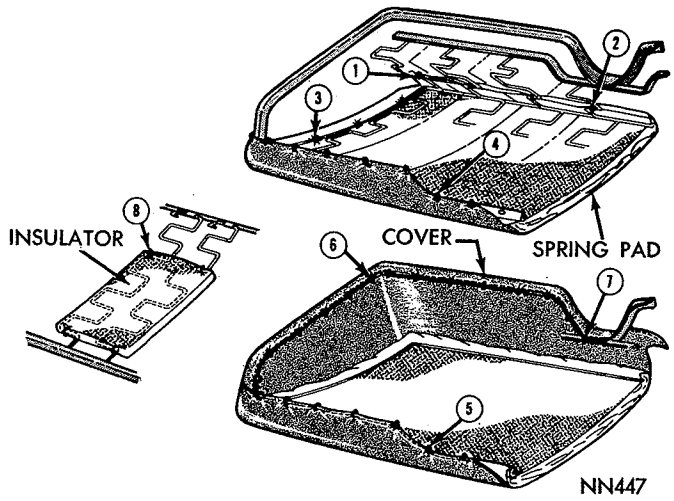


*Fig. 56—Rear Seat Cushion—Barracuda*

### Barracuda (Fig. 56)

#### Spring Pad

(1) Front—Attach to 6th bar of 1st, 3rd, 5th spring elements, [6] hog rings.

(2) Front—Attach to 4th bar of 7th spring elements, [2] hog rings.

(3) Sides—Attach to top rim, [3] hog rings each side equally spaced.

(4) Rear—Attach to each slot in rear retainer, [15] hog rings.

#### Cover

(5) Rear—Attach to each slot in rear retainer, [15] hog rings.

(6) Front and Sides—Attach to each slot in bottom frame, [27] hog rings.

(7) Center—Attach to front retainer, [2] hog rings.

#### Insulator

(8) Attach to 9th and 12th bar of 6th spring element, [4] hog rings.

### Valiant—Station Wagon (Fig. 57)

#### Insulator

(1) Attach to tension braces at center of spring, [4] hog rings (See View Arrow "A").

#### Spring Pad

(2) Front—Attach to 6th bar of every other element, [4] hog rings.

(3) Sides—Attach to top rim, [2] hog rings each side.

(4) Rear—Attach to each slot in retainer, [7] hog rings.

(5) Rear—Attach to top rim, [2] hog rings each end.

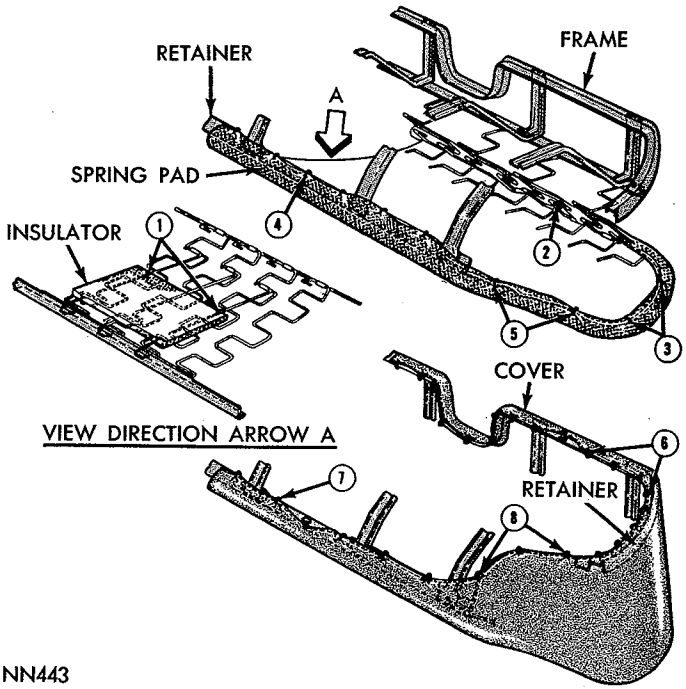


*Fig. 57—Station Wagon 2nd Seat Cushion—Valiant*

MyMopar.com

### Cover

(6) Front and Sides—Attach to each slot in bottom retainer, [26] hog rings.

(7) Rear—Attach to each slot in retainer, [9] hog rings.

(8) Sides—Attach to semi bottom rim, [3] hog rings each side.

## FRONT SEAT BACK

### *Fury—2 Door Sedan (Fig. 58)*

### *Spring Pad*

(1) Top—Attach to listing and trim brace [5] hog rings equally spaced.

(2) Sides—Attach to 3rd turn of #1 and 5 coils of each row, [4] hog rings each side. Twist burlap extension and attach firmly to suitable coil turn, [1] hog ring each side.

(3) Bottom—Attach to 3rd turn of each coil in bottom row, [5] hog rings.

### *Foundation Board*

(4) Attach to brace "X", [2] hog rings.

### *Cover*

(5) Attach rear to semi-bottom rim, [2] hog rings each side.

(6) Attach inside tab to semi-bottom rim, [1] hog ring.

### *Fury II and III—4 Door (Fig. 59)*

### *Spring Pad*

(1) Top—Attach to trim tabs in upper retainer [9] hog rings.

(2) Sides—Attach to 3rd, 5th and 7th bar of formed element, [3] hog rings each side.

(3) End—Front—Attach to 9th loop of jack spring, [1] hog ring each.

(4) Front—Attach to 1st vertical wire of every lower spring element, [11] hog rings.

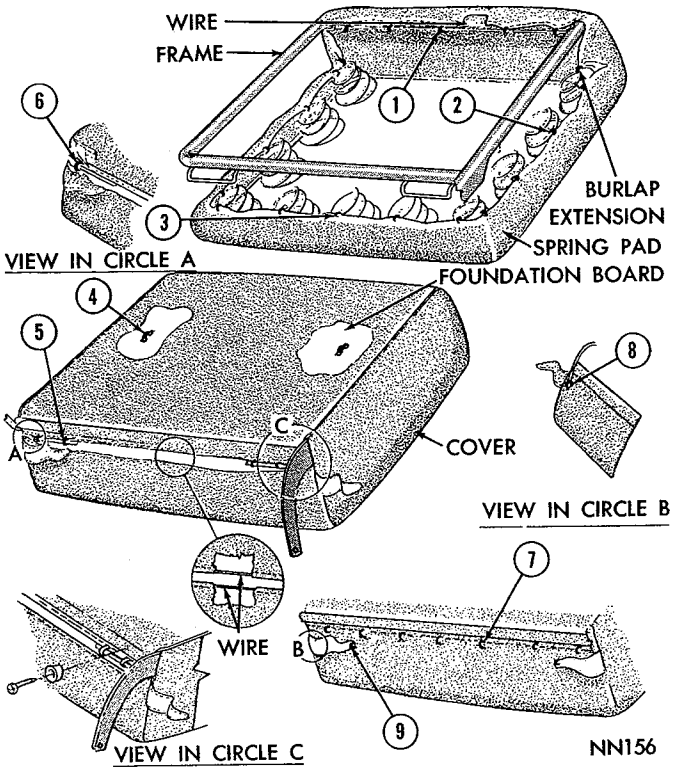


*Fig. 58—Front Seat Back—Fury 2 Door Sedan*

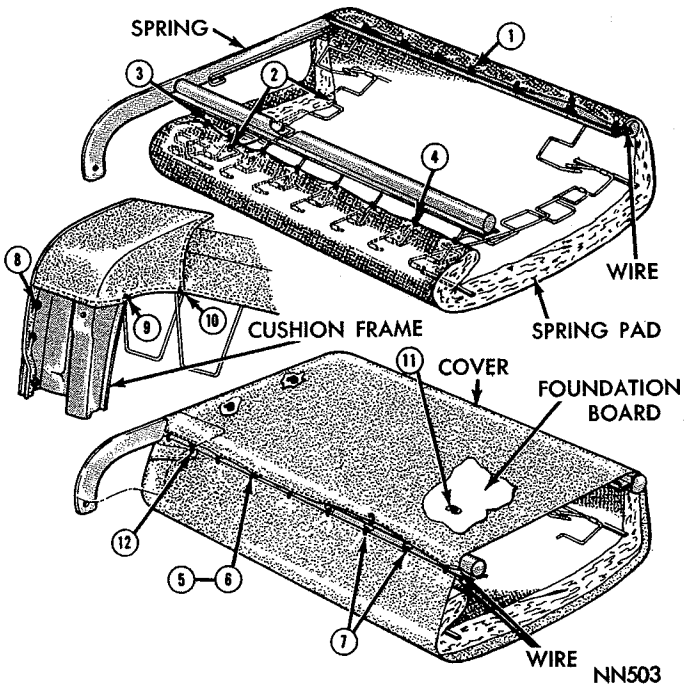


*Fig. 59—Front Seat Back—Fury 11 and 111—4 Door Sedan*

### Cover

(5) Rear—Attach to 1st and 4th slot of right retainer, [2] rog rings.

(6) Rear—Attach to 1st, 4th and 7th slot of left retainer, [3] hog rings.

(7) Front—Attach to each slot of right and left retainer, [13] rog rings.

(8) Side—Attach side facing to cushion frame trim pad, [3] each side.

### *Back Extension*

(9) Sides—Attach lower extension to bottom slot in cushion frame, [1] hog ring each side.

(10) Sides—Attach lower extension to 12th bar of 1st element, [1] hog ring each side.

### *Foundation Board*

(11) Attach to spring, [5] hog rings.

(12) Lower Side Facing Extension—Attach to 2nd slot of lower retainers [1] hog ring side.

### *Fury—Bucket Seat (Fig. 60)*

### *Pad Support*

(1) Rear—Attach with [5] hog rings to spring wires.

(2) Sides—Attach with [4] hog rings each side to trim wires.

MyMopar.com

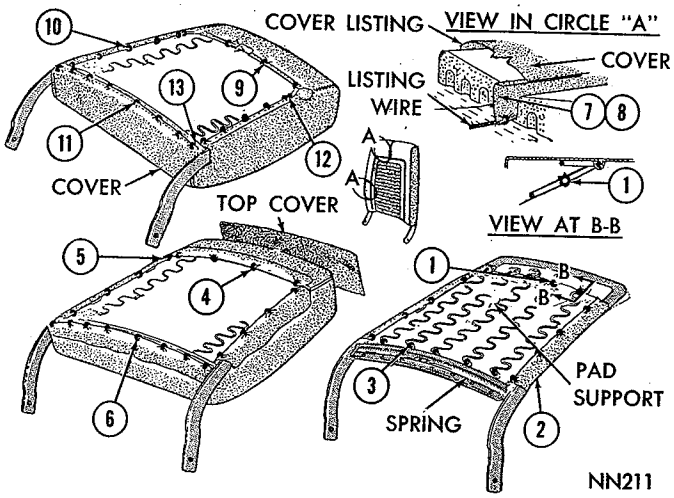


*Fig. 60—Bucket Seat Back—Fury and Sport Fury*

(3) Bottom—Attach with [5] hog rings to trim wires.

### Cover Pad

(4) Top—Attach with [4] hog rings to spring retainer slots.

(5) Sides—Attach with [4] hog rings, each side to trim wires.

(6) Bottom—Attach with [8] hog rings to spring retainer slots.

### Cover Listing

(7) Attach with [8] hog rings to the vertical bolster wires.

(8) Attach with [3] hog rings to the horizontal bolster wires.

### Cover

(9) Front—Attach with [4] hog rings to spring retainer slots.

(10) Sides—Attach with [5] hog rings each side to trim wires.

(11) Bottom—Attach with [8] hog rings to spring retainer slots.

### Listing Reinforcement

(12) Sides—Attach with [1] hog ring, each side to trim wires.

### Cover Welt

(13) Ends—Attach with [1] hog ring, each end to bottom spring retainer slots.

## Belvedere—2 Door (Fig. 61)

### Spring Pad

(1) Top—Attach to trim brace, [4] hog rings equally spaced.

(2) Sides—Attach to 2nd turn of each coil, [3] hog rings each side.

(3) Bottom—Attach to 2nd turn of each coil, [5] hog rings.

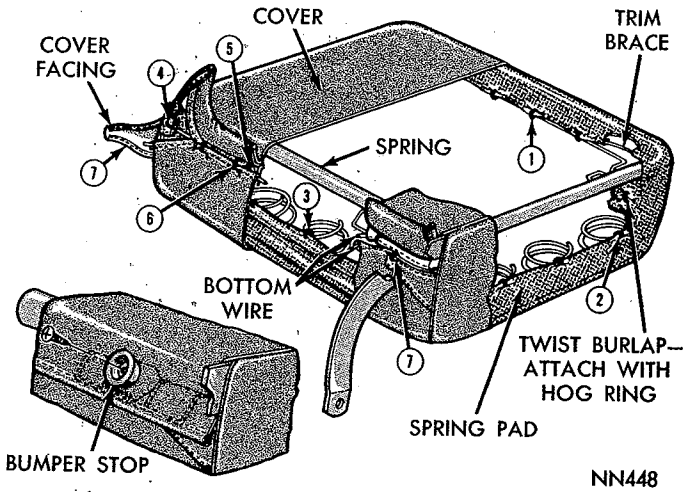


*Fig. 61—Front Seat Back—Belvedere 2 Door*

### Cover

(4) Lower side facing inner tab—attach to semi-bottomed rim, [1] hog ring on inside facing only.

(5) Kick pad—Attach to semi-bottomed rim, [2] hog rings.

(6) Lower front facing—Attach to semi-bottom rim and kick pad listing wire, [7] hog rings equally spaced.

(7) Lower side facing outer tab—Attach to lower front facing listing wire, [1] hog ring each tab.

## Belvedere—4 Door (Fig. 62)

### Spring Pad

(1) Top—Attach to slots in retainer, [9] hog rings equally spaced.

(2) Sides—Attach to arch wire, [3] hog rings each side, equally spaced.

(3) Bottom—Attach to each spring, [13] hog rings.

### Cover

(4) Kick pad—Attach to slots in retainer, [5] hog rings equally spaced.

(5) Lower front facing—Attach to kick pad listing

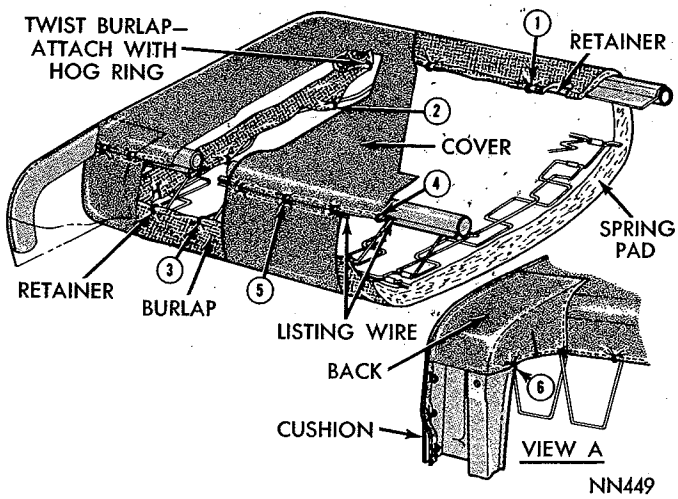


*Fig. 62—Front Seat Back—Belvedere 4 Door*

MyMopar.com

wire and each slot in retainer, [13] hog rings.

(6) Lower side and inner facing—Attach to front seat cushion, [5] hog rings each side.

### Valiant—2 Door (Fig. 63)

### Spring Pad

(1) Top—Attach to each slot in retainer, [6] hog rings.

(2) Sides—Attach to arch wire, [3] hog rings each side.

(3) Bottom—Attach to each spring, [5] hog rings.

### Cover

(4) Inside Listing—Attach to each spring, [5] hog rings.

(5) Extension Tab—Attach to jack spring, [1] hog ring (See View Arrow "A").

(6) Front and Rear Facing—Attach to rear facing [8] hog rings.

(7) Rear Facing—Attach to front facing in step 6.

(8) Lower Facing Outer Extension—Attach to lower rear facing wire, [1] hog ring each side.

### Foundation

(9) Attach to trim wire, [4] hog rings.

### Valiant—4 Door (Fig. 64)

(1) Top—Attach to slots in retainer, [8] hog rings.

(2) Sides—Attach to arch wire, [3] hog rings each side.

(3) Bottom—Attach to each element, [10] hog rings.

### Cover

(4) Inspect Listing—Attach to each element, [10] hog rings.

(5) Kick Pad—Attach to front facing, [10] hog rings, equally spaced.

(6) Side Facing Lower—Attach to front seat cushion, [2] hog rings each end.

(7) Extension Tabs—Attach to front seat cushion,

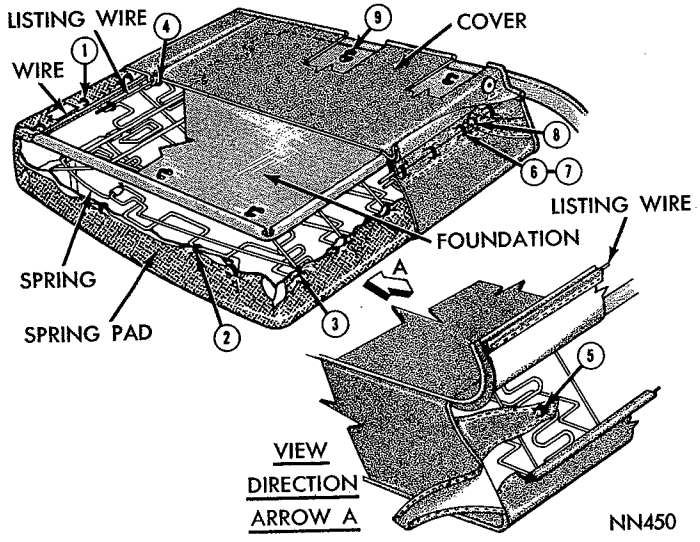


*Fig. 63—Front Seat Back—Valiant 2 Door*

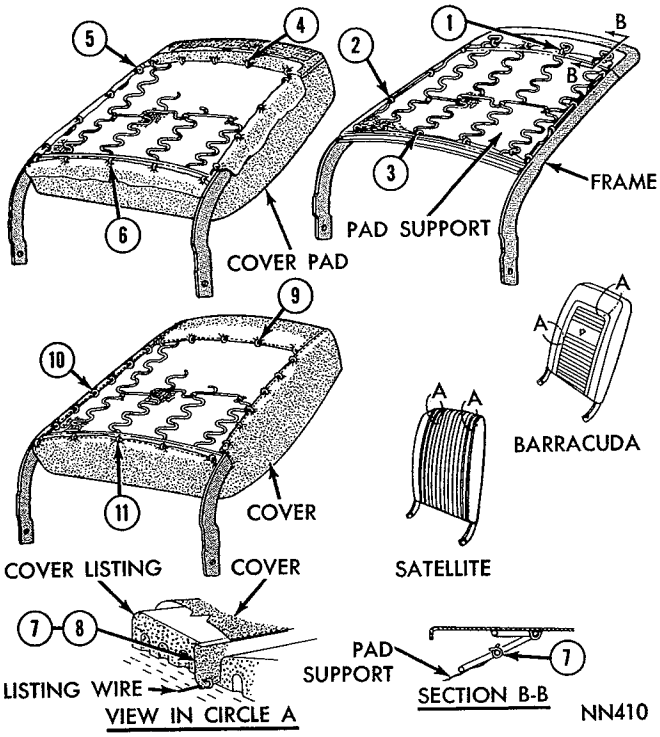


*Fig. 64—Front Seat Back—Valiant 4 Door*

[3] hog rings each end.

### Foundation Board (Heavy Duty Only)

(8) Attach to spring, [6] hog rings.

### Belvedere—Satellite—Valiant Bucket Seat (Fig. 65)

### Pad Support

(1) Top—Attach to the 3rd bar of spring wires, [4] hog rings.

(2) Sides—Attach to trim wires, [4] hog rings each

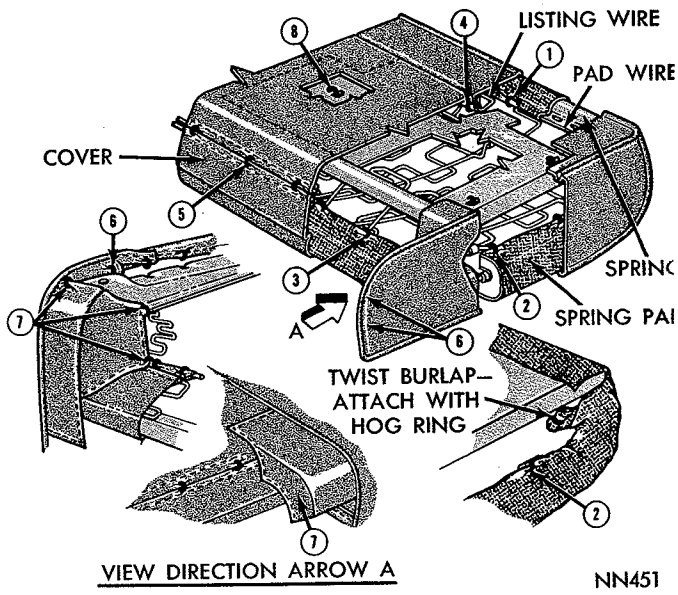


*Fig. 65—Bucket Seat Back—Belvedere—Satellite—Valiant*

MyMopar.com

side.

(3) Bottom—Attach to the 3rd bar of spring wires, [4] hog rings.

### Cover Pad (Rubber)

(4) Top—Attach to spring retainer slots, [5] hog rings.

(5) Sides—Attach to trim wires, [4] hog rings each side.

(6) Bottom—Attach to spring retainer slots, [5] hog rings.

### Cover Listing

(7) Vertical—Attach to listing wires, [3] hog rings each side (Belvedere—Satellite).

(8) Vertical Center—Attach to listing wires, [3] hog rings (Valiant).

### Cover

(9) Top—Attach to spring retainer slots, [5] hog rings.

(10) Sides—Attach to trim wires, [6] hog rings each side equally spaced.

(11) Bottom—Attach to spring retainer slots, [5] hog rings.

## REAR SEAT BACK

### Fury—Sedan and Hardtop (Fig. 66)

### Spring Pad

(1) Top—Attach to trim brace, [12] hog rings equally spaced.

(2) Burlap Listing—Attach to each slot in J-rim, [3] hog rings each side.

(3) Bottom—Attach to top rim, [14] hog rings equally spaced.

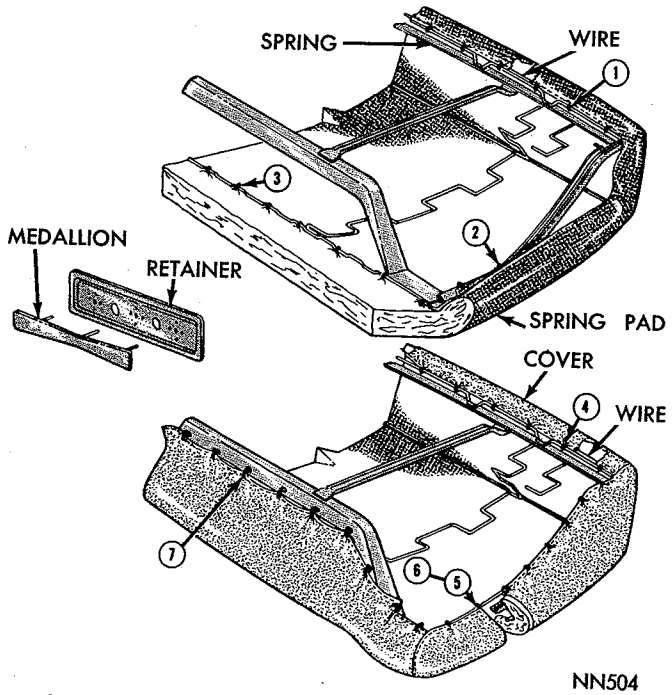


*Fig. 66—Rear Seat Back—Fury Sedan—Hardtop*

### Cover

(4) Top—Attach to trim brace, [12] hog rings equally spaced.

(5) Sides—(except 2 door H.T.)—Attach to trim brace, [8] hog rings each side equally spaced.

(6) Sides (2 Door H.T.) Attach to each slot in J-rim [7] hog rings each side.

(7) Bottom—Attach to each slot in lower retainer, [17] hog rings.

### Sport Fury—2 Door Hardtop (Fig. 67)

### Spring Pad

(1) Top—Attach to bottom rim, [16] hog rings equally spaced, and at center notch, [3] hog rings equally spaced.

(2) Sides and Bottom—Attach to top rim, [3] hog rings each side and at bottom, [12] hog rings equally spaced.

### Cover

(3) Top and Sides—Attach cover to top rim, [28] hog rings equally spaced and to each side, [8] hog rings equally spaced.

(4) Bottom—Attach to bottom rim, [18] hog rings equally spaced.

### Fury and Sports Fury—Convertible (Fig. 68)

### Spring Pad

(1) Top—Attach burlap listing to trim, [11] hog rings equally spaced.

(2) Sides and Bottom—Attach to top rim, [3] hog rings each side equally spaced and [11] hog rings at bottom equally spaced.

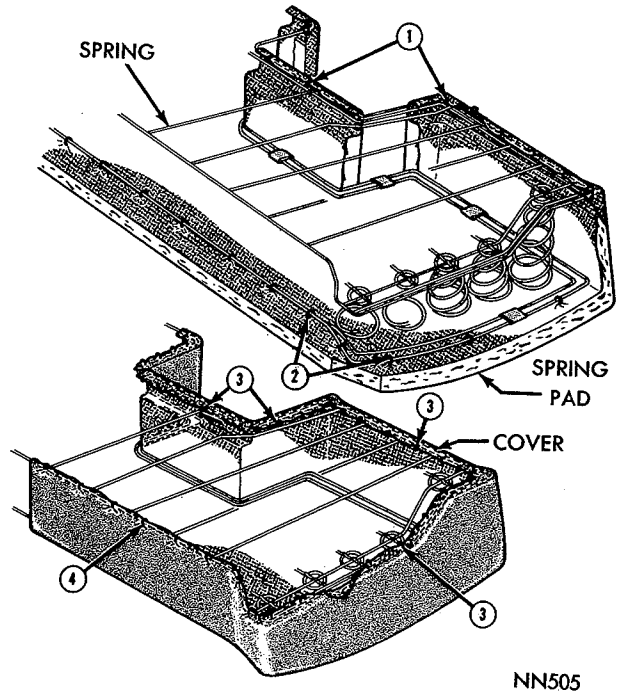


*Fig. 67—Rear Seat Back—Sport Fury 2 Door Hardtop*

MyMopar.com

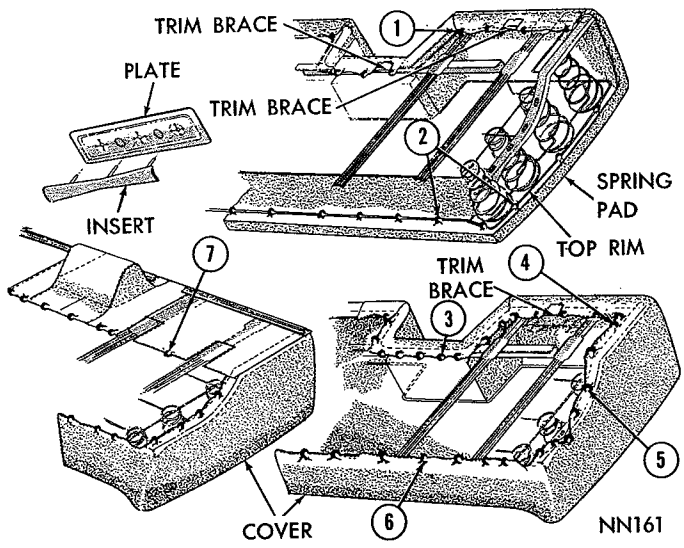


*Fig. 68—Rear Seat Back—Fury and Sport Fury Convertible*

### Cover

(3) Top—Attach to trim brace, [19] hog rings equally spaced.

(4) Sides—Attach to side trim brace, [4] hog rings each side.

(5) Sides—Attach to each slot in bottom frame, [4] hog rings each side.

(6) Bottom—Attach to bottom rim, [13] hog rings equally spaced.

(7) Back Panel and Radio Speaker Cover—Attach to horizontal bottom brace, [8] hog rings spaced as shown.

## Fury—Station Wagon

### 2nd Seat Back (Fig. 69)

(1) Spring pad to trim brace wire with [11] hog rings equally space—top.

(2) Spring pad to top rim with [8] hog rings [4] each side equally spaced and [11] hog rings equally spaced bottom.

(3) Cover to trim brace wire with [15] hog rings equally spaced—top and [14] hog rings [7] each side equally spaced.

(4) Cover to bottom rim wire with [15] hog rings equally spaced—bottom.

### 3rd Seat Back (Fig. 69)

(1) Spring pad to each slot in "J"-rim upper with [14] hog rings—top.

(2) Spring pad to top rim with [8] hog rings equally spaced—bottom and [6] hog rings [3] each side equally spaced.

(3) Cover to each slot in "J"-rim with [14] hog rings—top, [12] hog rings—[6] each side and [14] hog rings—bottom.

## Fury—Rear Back Arm Rest (Fig. 70)

### Spring Pad

(1) Front—Attach to 4th turn of each coil, [2] hog rings.

(2) Sides—Attach to 2nd turn of each coil, [8] hog rings each side.

(3) Rear—Attach to 4th turn of each coil, [2] hog rings.

(4) **Rubber Pad** to 2nd turn of each front coil, [2] hog rings.

(5) **Cover**—No hog rings needed.

(6) **Side Facing**—Attach to bottom facing, [2] hog rings each side.

(7) **Staples**—Cover to board—Front [6] Rear [6] Sides [3] each.

(8) **Staples**—Spring to board [6].

(9) **Tacks**—Flap end to board [2].

## Belvedere—Sedan and Hardtop (Fig. 71)

### Spring Pad

(1) Top—Attach to outside top rim, [8] hog rings equally spaced.

(2) Sides—Attach to outside top rim, [3] hog rings each side equally spaced.

(3) Bottom—Attach to outside top rim, [8] hog rings equally spaced.

### Cover

(4) Top—Attach to frame retainer slots, [12] hog rings equally spaced.

(5) Sides—Attach to spring trims wires, [8] hog rings each side equally spaced.

(6) Bottom—Attach to bottom rim, [3] hog rings each side and to retainer slots, [9] hog rings equally spaced.

## Satellite (Fig. 72)

### Spring Pad

(1) Top—Attach to spring trim wires, [11] hog rings equally spaced.

(2) Sides—Attach to outside top rim wires, [3] hog rings each side.

(3) Bottom—Attach to outside top rim wires, [7 hog rings equally spaced.

### Cover

(4) Top—Attach to trim rim wires, [20] hog ring equally spaced and to bottom rim wires [6] hog ring equally spaced.

(5) Sides—Attach to trim wires, [7] hog rings eacl side.

(6) Bottom—Attach to bottom rim wires, [15] ho rings equally spaced.

## Belvedere—Convertible (Fig. 73)

### Spring Pad

(1) Top—Attach to top trim brace, [9] hog ring equally spaced.

(2) Sides—Attach to outside top rim wires, [4] ho rings each side equally spaced.

(3) Bottom—Attach to 3rd turn of each coil of bo

MyMopar.com

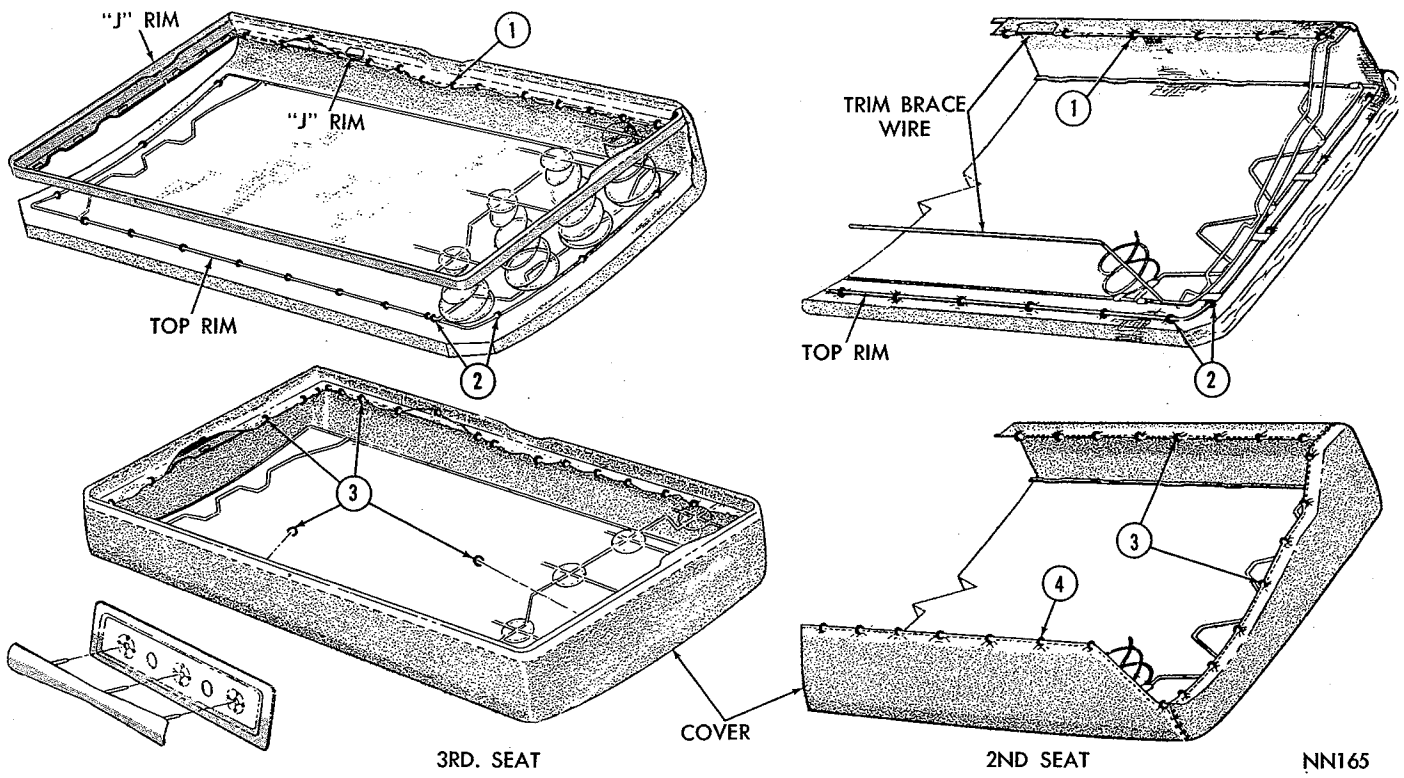


***Fig. 69—Station Wagon 2nd Seat Back—Fury***

tom row, [1] hog ring each side of top end of number 1, 2 and 3 coils, [1] hog ring each side to bottom end of number 4 coil, and [1] hog ring to bottom end of number 5 coil.

### Cover

(4) Top—Attach to trim brace, [14] hog rings equally spaced.

(5) Sides—Attach to bottom brace, [5] hog rings

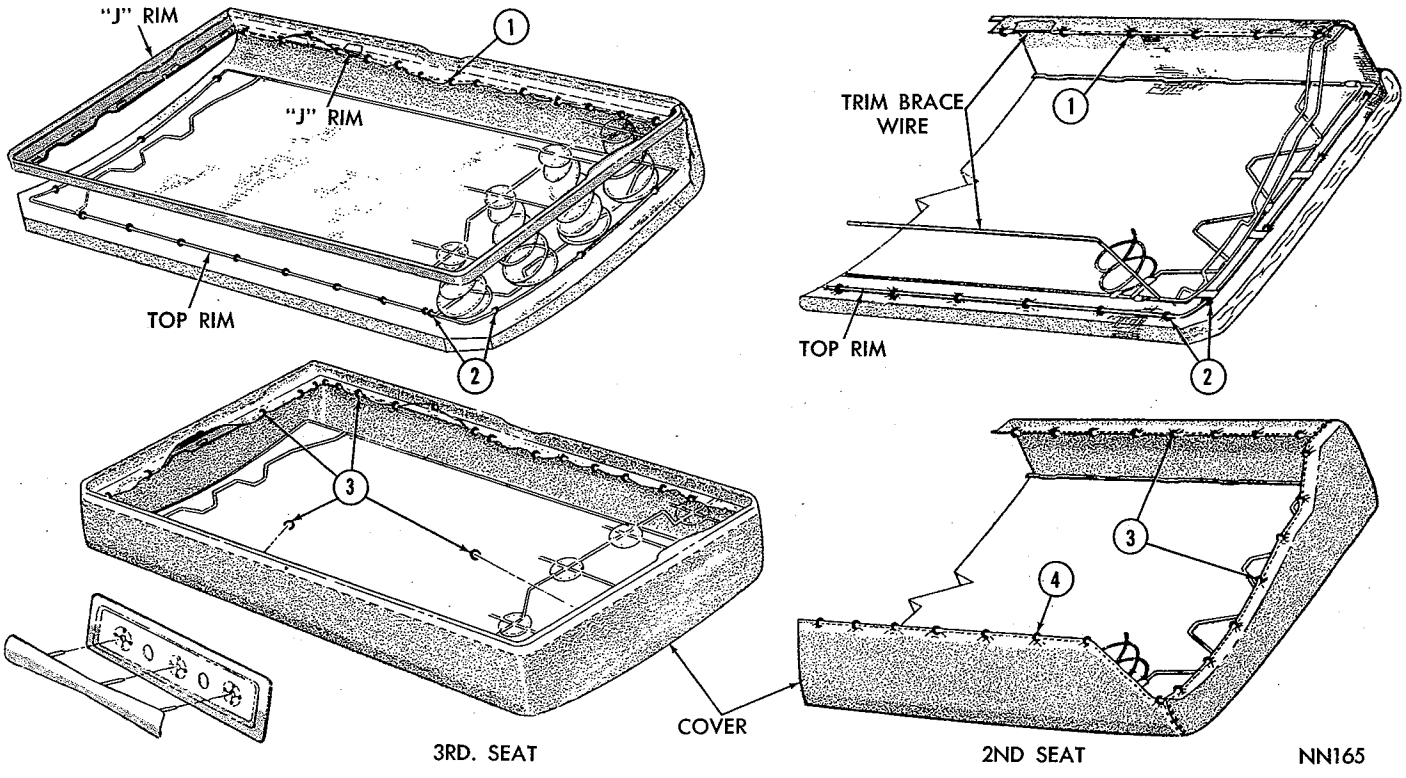


***3rd Seat Back***

MyMopar.com

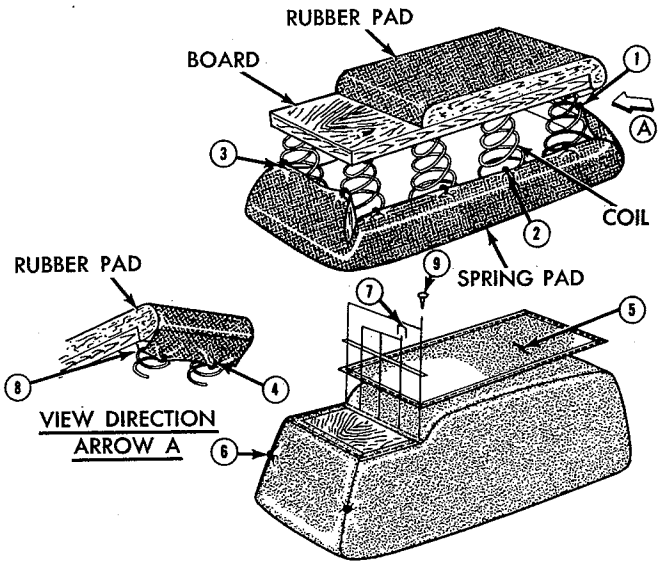


*Fig. 70—Rear Seat Back Arm Rest—Fury*

each side.

(6) Bottom—Attach to bottom rim wires, [15] hog rings equally spaced.

### Belvedere—Station Wagon 2nd and 3rd Seats (Fig. 74)

### Spring Pad

(1) Top—Attach (2nd seat) trim rim, [10] hog rings, or (3rd seat) trim wire, [8] hog rings equally spaced.

(2) Sides—Attach to top rim, [3] hog rings each side equally spaced.

(3) Bottom—Attach to (2nd seat) top rim, [8] hog rings, or (3rd seat) trim wire, [8] hog rings equally spaced.

### Cover

(4) Top—Attach to (2nd seat) trim rim, [16] hog rings, or (3rd seat) trim wire, [12] hog rings equally

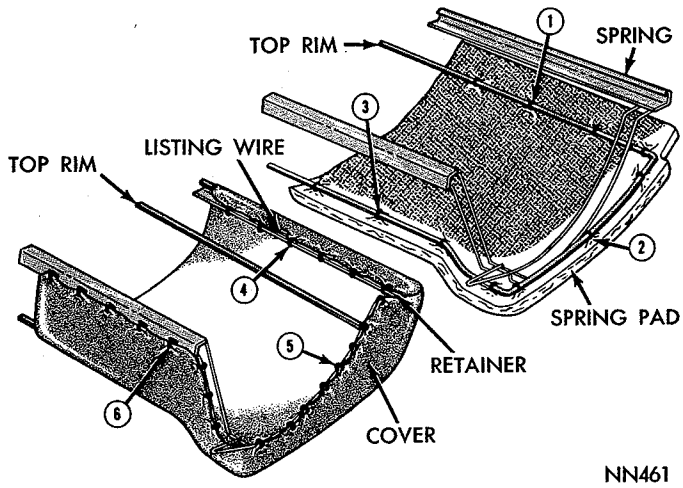


*Fig. 71—Rear Seat Back—Belvedere Sedan—Hardtop*

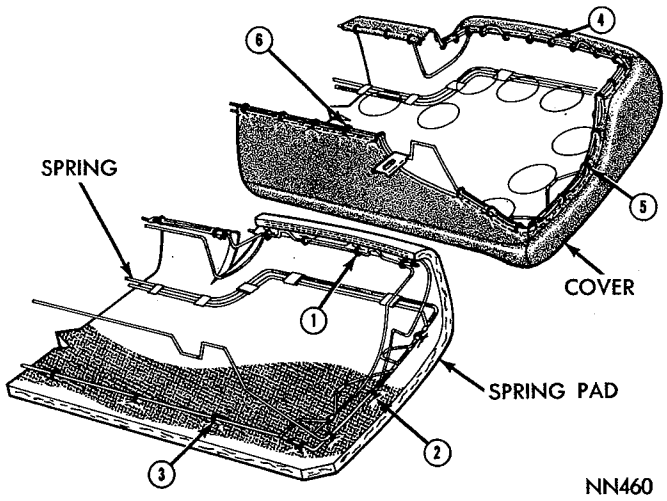


*Fig. 72—Rear Seat Back—Satellite*

spaced.

(5) Bottom—Attach to (2nd seat) semi-bottom rim, [14] hog rings, or (3rd seat) trim wire, [12] hog rings equally spaced.

(6) Sides—Attach to (2nd seat) trim rim, or (3rd seat) trim wire, [8] hog rings each side equally spaced.

### Valiant—Sedan and Hardtop (Fig. 75)

### Spring Pad

(1) Top—Attached to outside top rim, [11] hog rings equally spaced.

(2) Sides—Attach to outside top rim, [4] hog rings each side equally spaced.

(3) Bottom—Attach to outside top rim, [13] hog rings equally spaced.

### Cover

(4) Top—Attach to retainer slots, [11] hog rings equally spaced.

(5) Sides—Attach to trim and hanger wires, [7] hog rings each side.

(6) Bottom—Attach to retainer slots, [15] hog rings

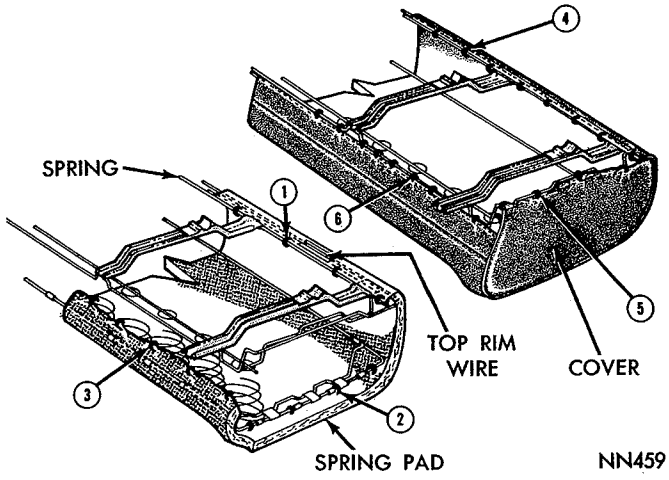


*Fig. 73—Rear Seat Back—Belvedere Convertible*

MyMopar.com

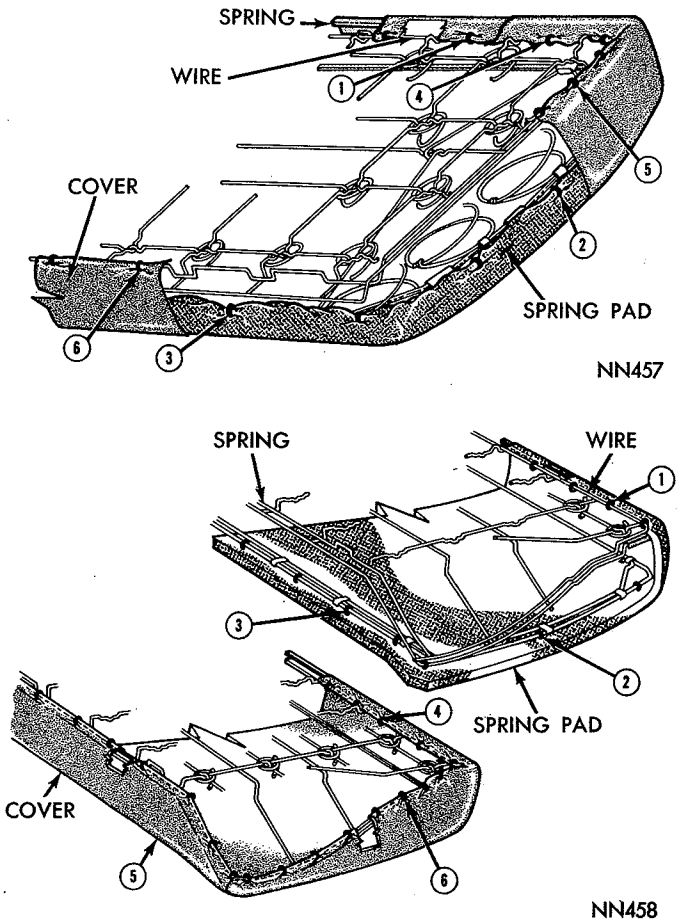


*Fig. 74—Station Wagon 2nd and 3rd Rear Seat Back—Belvedere*

equally spaced.

### Valiant—Station Wagon 2nd Seat (Fig. 76)

#### Spring Pad

(1) Top—Attach to trim wire, [11] hog rings equally spaced.

(2) Sides—Attach to inside top rim, [3] hog rings each side.

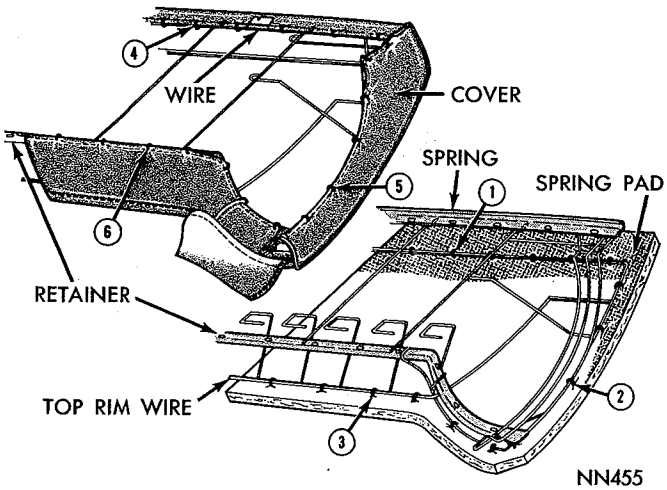


*Fig. 75—Rear Seat Back—Valiant Sedan and Hardtop*

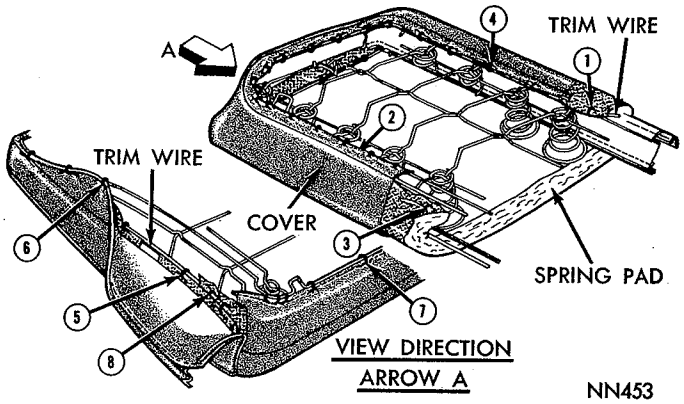


*Fig. 76—Station Wagon 2nd Seat Back—Valiant*

(3) Bottom—Attach to 2nd turn of each coil, [8] hog rings.

#### Cover

(4) Top—Attach to trim wire, [18] hog rings equally spaced.

(5) Sides—Pull listing down and attach to trim wire, [3] hog rings each side.

(6) Sides—Attach to trim wire, [8] hog rings each side.

(7) Bottom—Attach to trim wire, [15] hog rings equally spaced.

(8) Bottom Extension—Attach to trim wire, [1] hog ring each end.

### Valiant—Convertible (Fig. 77)

#### Spring Pad

(1) Top—Attach to trim brace, [7] hog rings equally spaced.

(2) Sides—Attach to 2nd turn of each coil, [4] hog rings each side.

(3) Bottom—Attach to 2nd turn of each coil, [9] hog rings.

#### Cover

(4) Top—Attach to trim brace, [9] hog rings equally

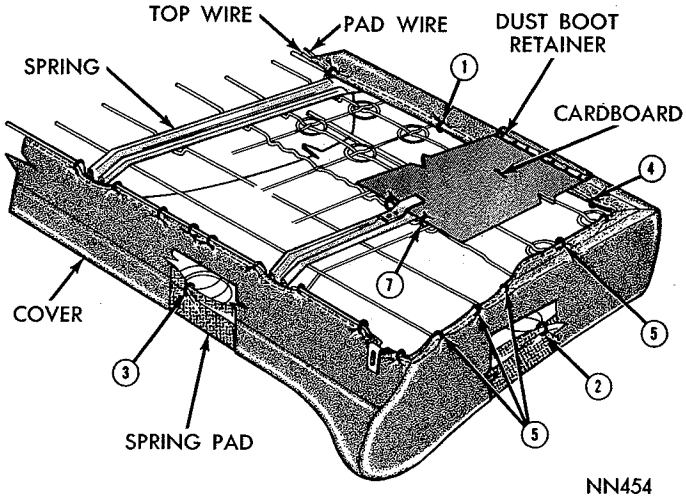


*Fig. 77—Rear Seat Back—Valiant Convertible*

MyMopar.com

spaced.

(5) Sides—Attach to each slot in "J" rim, [3] hog rings each side. Attach to bottom rim ends, [1] hog ring each side and attach to a brace wire, [3] hog rings each side.

(6) Bottom—Attach to bottom rim, [14] hog rings equally spaced.

### Cardboard

(7) Bottom—Attach to trim brace wire, [2] hog rings each side of corrugated slats.

### Barracuda (Fig. 78)

### Spring Pad

(1) Top—Attach to bottom rim, [10] hog rings equally spaced.

(2) Sides—Attach to top rim, [5] hog rings each side equally spaced.

(3) Bottom—Attach to top rim, [8] hog rings equally spaced.

### Cover Listing

(4) Sides—Attach to bottom rim, [3] hog rings each side.

## SEAT BELTS

Refer to Figures 79, 80, 81 and 82 for methods and areas of attaching the seat belts.

## POWER SEATS

The power seat can be moved six ways - forward, back, up, down, tilt forward and tilt rearward. The horizontal travel is five inches and horizontal plane of seat track is inclined eleven degrees. The vertical travel is 1½ inches at front and rear. The available tilt is 8 degrees forward and 7½ degrees rearward from neutral.

The motor operates a gear drive train which supplies power to the jack units, located in the seat tracks, through flexible cables. The control switch is on the left side of front seat and is wired through a relay to a 30 ampere circuit breaker, located above the left cowl panel.

The wire from the bulkhead disconnect, supplies power to the circuit breaker.

Power is supplied to the relay from the circuit breaker.

Six wires go to the switch. One used for power, two for motor field current, which also actuates the relay for motor armature current and three wires attach to solenoids controlling the movement of the front riser, rear riser and hoizontal movement (Fig. 83).

### Electrical Tests (Fig. 84)

Before any tests are performed, the battery must be fully charged and continuity of the wiring and switch be established.

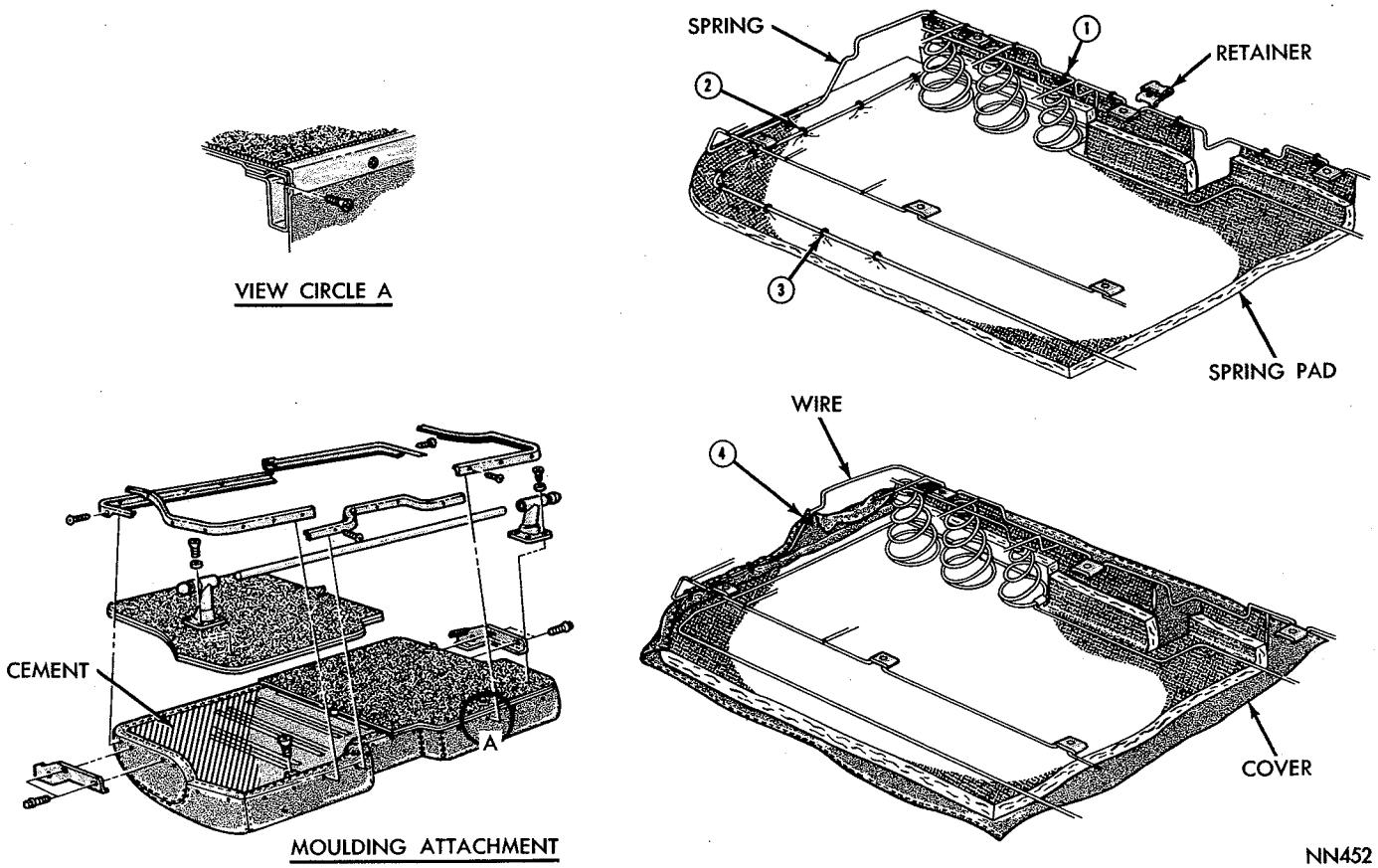


*Fig. 78—Rear Seat Back—Barracuda*

MyMopar.com

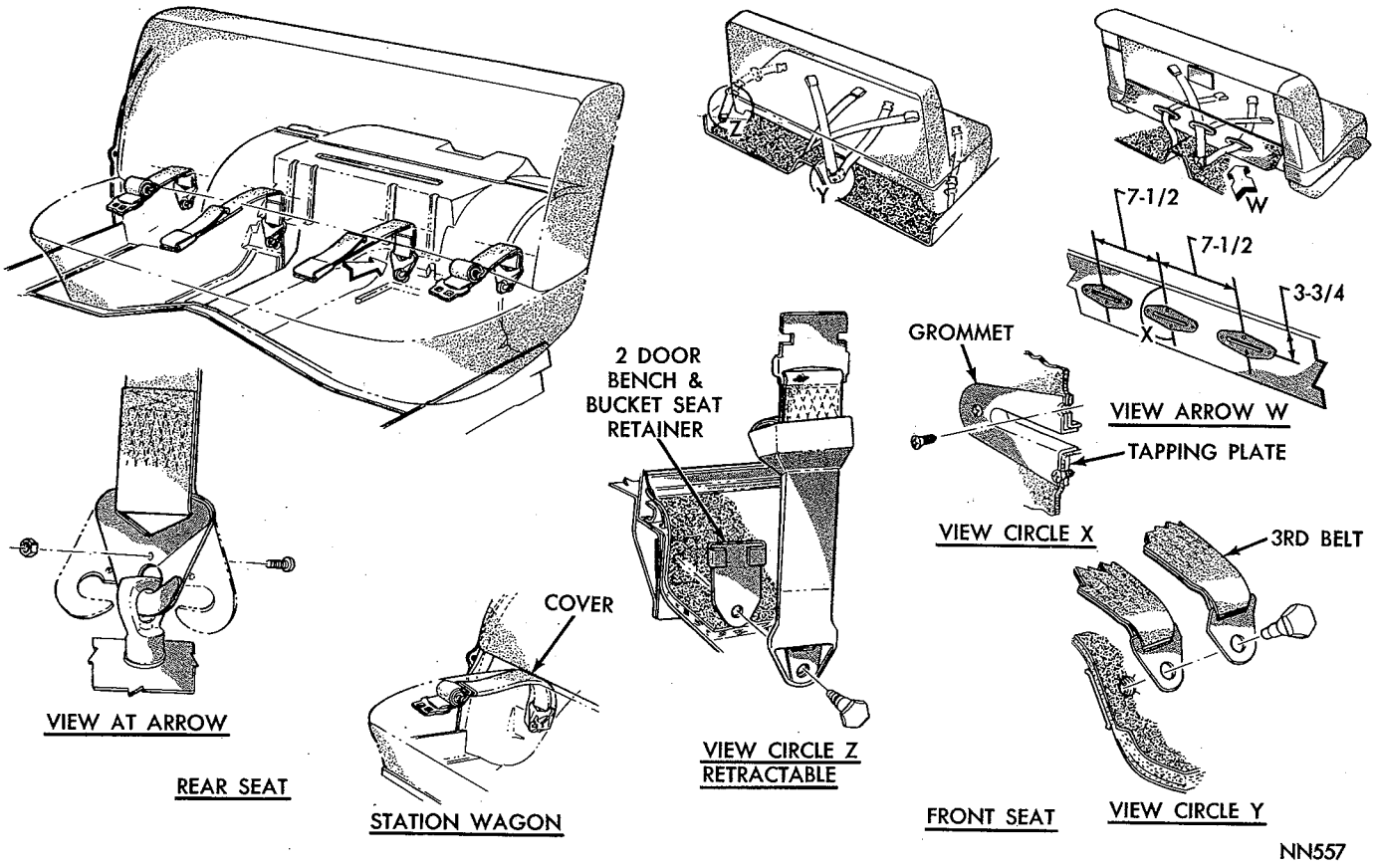


***Fig. 79—Seat Belt Applications (Fury)***

Connect one lead of a voltmeter to a good ground and the other lead to the terminal of the red feed-in wire at the relay. The voltage should be 12.6 volts. If no reading is obtained, test the circuit breaker or check for loose connections from the ammeter to the accessory circuit breaker.

### *Motor and Relay*

Disconnect the red, black and green motor wires from the relay. Connect a jumper wire from the red motor wire to either the black or green motor wires. Connect another jumper to the red feed-in wire on the relay. If the motor does not run, the motor is faulty and should be replaced. If the motor runs, the relay should be replaced.

### *Solenoid and Switch*

Remove the leads from the solenoids and connect a jumper wire from the red feed-in lead to each of the solenoid terminals, one at a time. If a distinct "click"

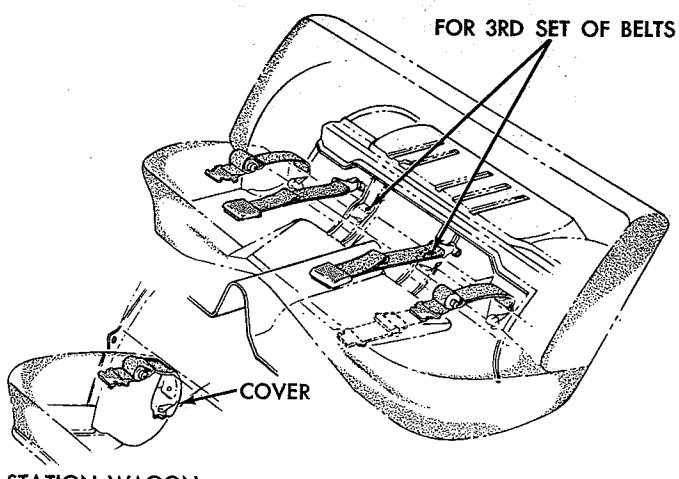


***Fig. 80—Rear Seat Belt Applications (Valiant)***

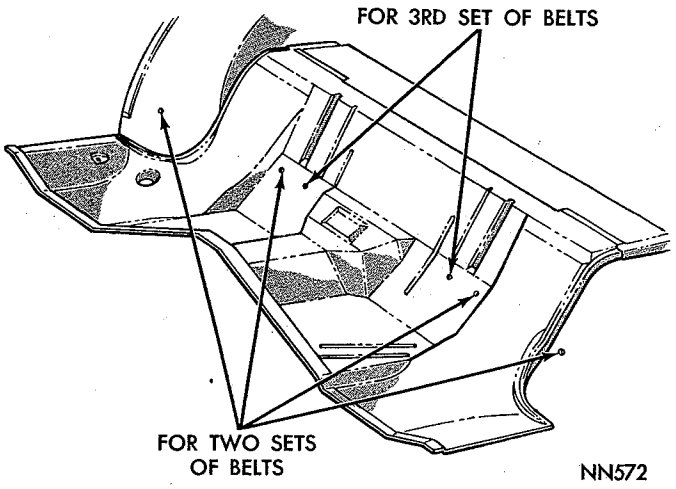


***Fig. 81—Rear Seat Belt Applications (Belvedere—Satellite)***

MyMopar.com

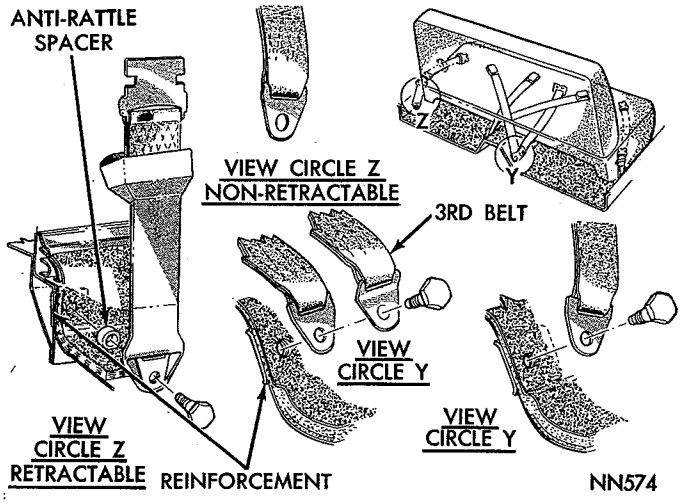


*Fig. 82—Front Seat Belt Applications*

is not heard, the solenoid is burned out. If all the solenoids "click" when the terminal is touched with the jumper wire, the switch is faulty and should be replaced.

### Relay

Using a test prod on a jumper wire, connect the jumper from the red feed-in wire to either the green or black wire terminal on the relay. Motor should run. If motor doesn't run replace the relay.

### Front Seat Assembly and Adjuster Removal

(1) Disconnect battery ground cable.

(2) Remove four mounting screws which hold front seat to adjust and tilt complete seat assembly forward.

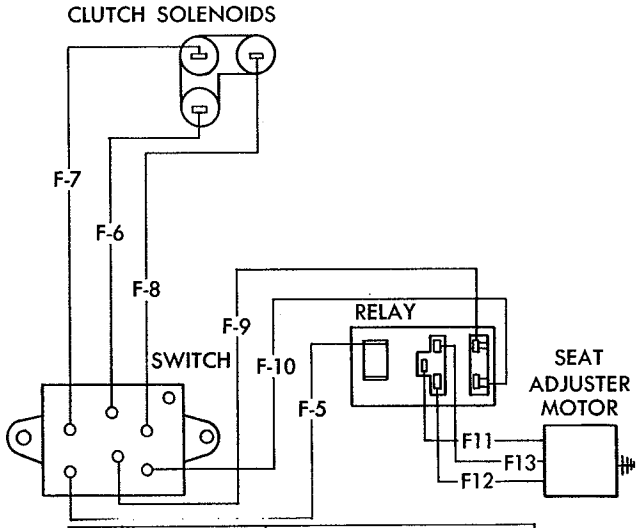


| NO. | COLOR | CIRCUIT |
|---|---|---|
| F-5 | RED | FEED |
| F-6 | BROWN | FRONT ELEVATOR |
| F-7 | DARK BLUE | HORIZONTAL |
| F-8 | YELLOW | REAR ELEVATOR |
| F-9 | BLACK | DOWN AND REARWARD |
| F-10 | DARK GREEN | UP AND FORWARD |
| F-11 | RED | MOTOR FEED |
| F-12 | DARK GREEN | UP AND FORWARD |
| F-13 | BLACK | DOWN AND REARWARD |

64 x 416A

*Fig. 84—Power Seat Wiring*

(3) Disconnect switch control wires.

(4) Remove front seat and cushion assembly.

(5) Disconnect seat adjuster red feed wire.

(6) Remove seat guide attaching stud nuts and remove adjuster.

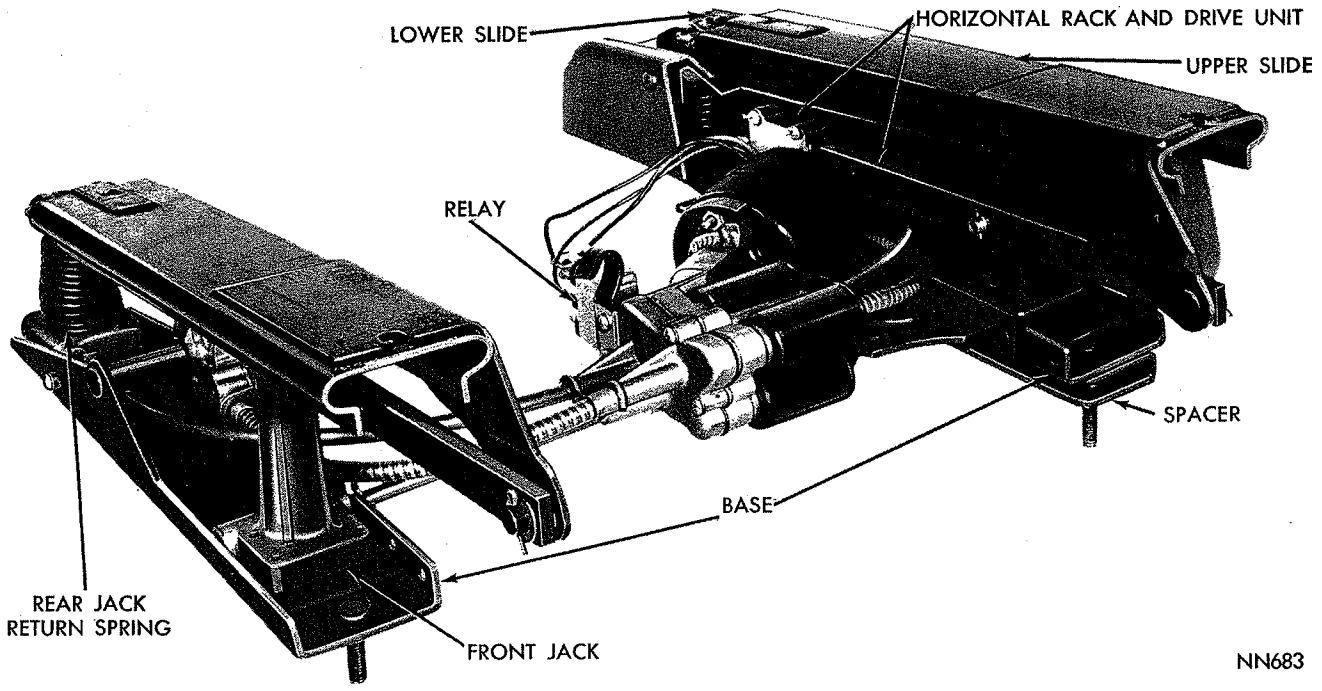


*Fig. 83—Power Seat Assembly (Bucket Type)*

MyMopar.com

### Installation

(1) Install adjuster and seat guide stud nuts.
(2) Connect seat adjuster red feed wire.
(3) Install front seat assembly.
(4) Connect control wires to switch and tighten mounting screws securely.
(5) Connect battery ground cable.

### Flexible Cables or Tubes

To replace a broken cable, it will be necessary to remove the tube also. The seat mounting nuts must be removed from under the vehicle and the seat tipped back.

### Horizontal Drive Cable

### Removal

(1) Remove 2 screws from cable mounting bracket and remove bracket at the motor drive assembly.

To remove left cable, remove motor drive assembly and pull cable from housing.

(2) Remove cotter pins from the rack pivot pins, drive horizontal drive gear pin out and remove drive rack assembly.

(3) Remove 6 drive rack cover plate screws, remove plate and lift cable from horizontal gear housing (Fig. 85).

### Installation

(1) Engage square end of cable in drive gear in horizontal gear housing and seat cable in housing.

(2) Install housing cover and 6 retaining screws.

(3) Position drive rack on upper slide pivot pin. Carefully drive pin through horizontal drive gear housing. Install the washer and cotter pins.

**The horizontal racks must be synchronized. Turn the horizontal drive cable to move upper slide forward or rearward as necessary.**

(4) Install cable in motor drive unit and install cable mounting bracket (right side) or the motor drive assembly (left side).

### Jack Cable Tubes

To remove the right rear cables, remove the cable mounting bracket at the motor drive assembly. The left cable tubes are removed by separating the motor drive assembly from the bracket. Next, remove the cable tube retainer screw and gently pull tube from the base of the jack.

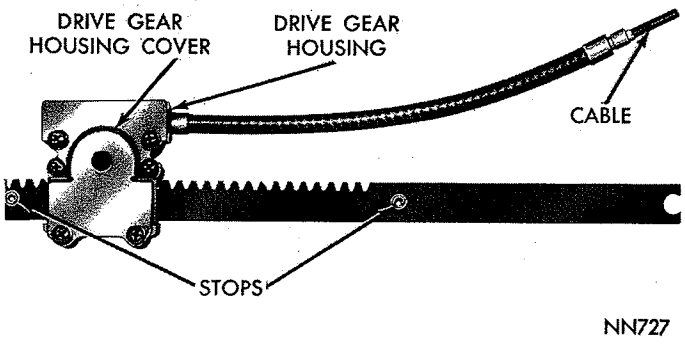


*Fig. 85—Horizontal Drive Gear and Rack*

### Front Jack

Put the seat in the far rearward position and remove the 4 jack retaining screws from the under base.

**On the left side, the 2 screws retaining the spacer to the base must be removed first (Bucket Seats only).**

Remove cotter pin and washer from upper slide and drive the upper retaining clevis pin from the lower slide. Remove the 4 screws from under the base plate and carefully pull jack forward to disengage front drive cable and tube, being careful to hold the plate under the jack to keep the worm and bushings from falling out. When installing jack, turn the worm shaft with a small screw driver to run jack up or down as necessary to index the clevis pin holes in the lower slide. Drive the clevis pin in partially and locate the washers on either side of jack before tapping the clevis pin all the way through the lower slide. Install washer and cotter pin.

### Rear Jack

### Removal

The seat track assembly must be removed from the vehicle, separated and mounted in a vise. Fasten a 10 inch "C" clamp from the base to the upper slide just tight enough to keep it in place (Fig. 86). **Do not over tighten.**

Drive the roll pin out of slide assembly and remove the 4 jack mounting screws from under the base. Slowly loosen and remove the "C" clamp and tip upper slide up. Remove the spring from between the slide and base.

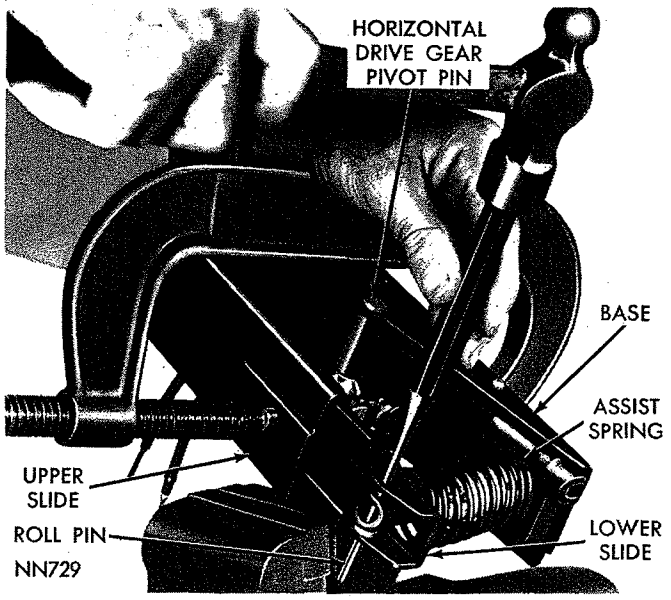


*Fig. 86—Removing Rear Jack and Roll Pin*

MyMopar.com

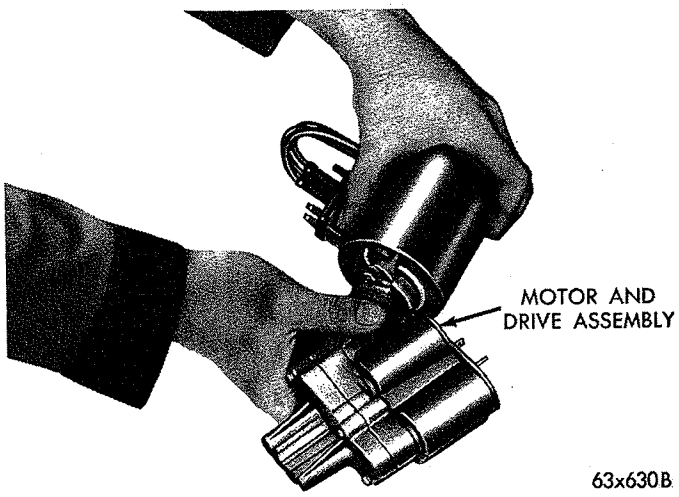


*Fig. 87—Motor Removal*

### Installation

Before installing jack, turn the worm shaft with a small screw driver to run jack up or down as necessary to index the roll pin holes. Slide the jack assembly onto the base, indexing the cable end in the worm shaft. Install the 4 screws from under the base. Raise the slide and position the spring over the jack. Install the "C" clamp and collapse the spring till the roll pin holes index. Drive the roll pin in partially and locate the washers on either side of the jack head before tapping roll pin all the way through the slide assembly. Lubricate slides and rack with Lubriplate or an equivalent and install track assembly in vehicle.

### Rear Jack Assist Spring

To replace the rear jack assist spring the procedure is the same as the rear jack replacement except that the jack is not removed from the base. See "Rear Jack Removal and Installation."

**The jacks must be synchronized. Turn the cable to raise or lower jack as necessary.**

### Switch

### Removal

(1) Remove seat mounting screws and tip seat forward.

(2) From under the seat, disconnect wire terminals from relay solenoid terminals.

(3) Remove 2 mounting nuts from studs and remove switch.

### Installation

(1) Position switch on mounting studs and install the 2 nuts.

(2) Connect the wire terminals to the solenoid terminals and relay (Fig. 84).

(3) Position the seat on the riser and secure with the mounting screws.

## MOTOR

### Removal (Fig. 87)

(1) Remove two screws that hold left side of front seat to seat adjuster.

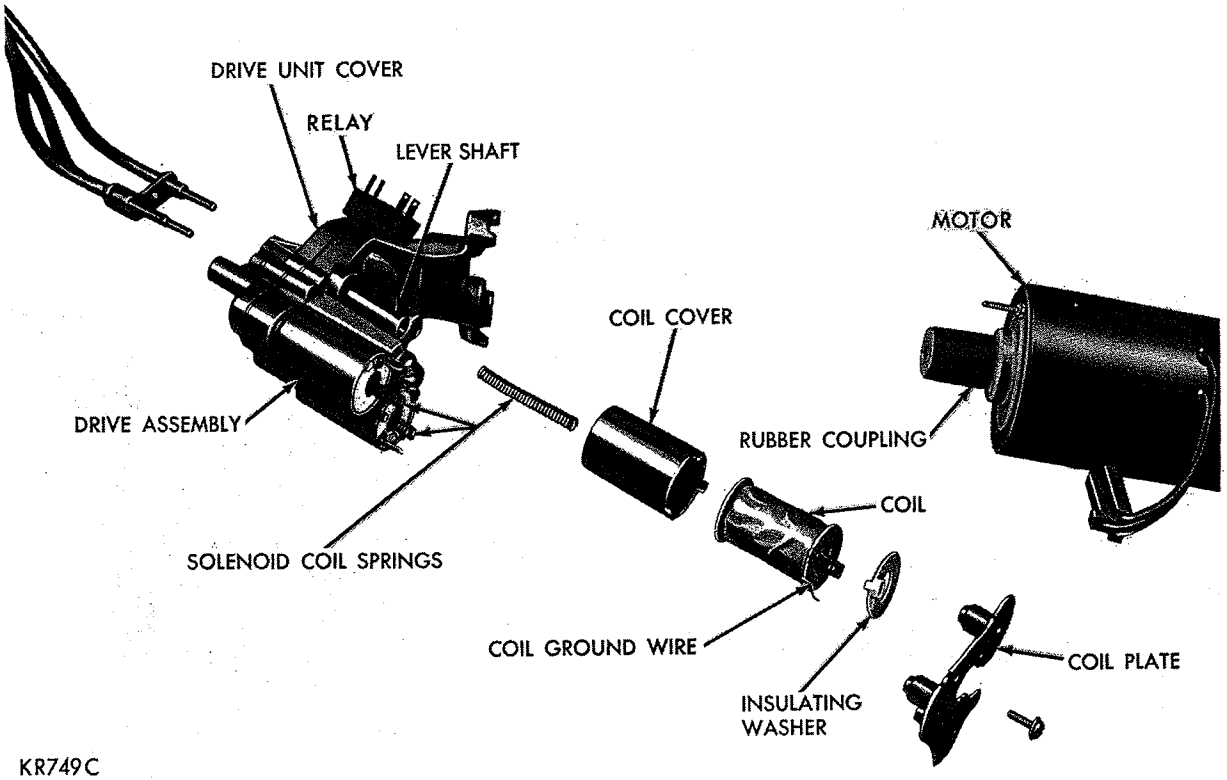


*Fig. 88—Solenoid and Coil*

MyMopar.com

(2) Prop-up left side of seat cushion approximately six inches.

(3) Remove two nuts that attach motor to drive unit.

(4) Remove motor and rubber coupling from drive unit.

(5) Disconnect motor wires from relay.

### Installation

(1) Connect motor wires to relay.

(2) Install motor and rubber coupling to drive unit. Install two attaching nuts.

(3) Remove prop from left side of seat cushion. Position seat on seat adjuster and install two screws.

### Drive Unit and Solenoid Assembly Disassembly

(1) Remove drive unit from seat assembly. See "Removal of Flexible Cables."

(2) Remove two screws holding plate and solenoids to drive unit (Fig. 88).

(3) Remove plate and solenoid assembly. Be careful not to lose three springs under solenoid.

(4) To remove solenoid coils, bend back on tabs of solenoid cover. Unsolder coil ground wire at cover tab and remove coil cover from coil.

(5) Remove screws holding cover on drive unit.

(6) Remove cover and lift out clutch lever and shaft.

### Assembly

(1) Install clutch lever and shaft. Make sure lever is properly seated on collar.

(2) Install cover and screws.

(3) Install coil in coil cover with coil ground wire next to one of cover tabs.

(4) Position cover tabs in slots on coil plate.

(5) Bend over tabs and resolder coil ground wire to tab and plate.

(6) Install three solenoid springs and position solenoids over springs.

## WINDSHIELD AND REAR WINDOW

### INDEX


| | Page |
|---|---|
| REAR WINDOW | |
| Belvedere—Satellite | 113 |
| Fury | 115 |
| Valiant—Barracuda | 114 |
| WINDSHIELD | |
| Belvedere-Satellite | 109 |
| Convertible | 111 |
| Fury | 112 |
| Valiant—Barracuda | 110 |
| Convertible | 111 |


## WINDSHIELD

### REPLACEMENT

### Removal

(1) Cover cowl, hood and fender area with a protective covering.

(2) Remove windshield garnish and outer mouldings (Figs. 1 and 2).

(3) Unlock weatherstrip (Fig. 3) by prying lip of weatherstrip apart, inserting a fibre wedge, and with a slight twist to wedge, unlock weatherstrip by moving tool around weatherstrip.

(4) Carefully loosen weatherstrip from glass inner and outer sides.

(5) With an assistant supporting one end of windshield, exert pressure, from inside car, to force windshield out of weatherstrip and carefully remove from opening.

(6) Whenever a glass has cracked from pressure at the fence area, remove weatherstrip and correct cause of crack. The fence should be straight, smooth, without burrs or high spots.

(7) Inspect weatherstrip for damage.

### Installation

(1) Remove all old sealer and cement from original weatherstrip.

(2) Apply sealer in fence and glass groove portions of weatherstrip.

(3) Apply a 3/8 inch bead of sealer cement completely across cowl top panel lower windshield frame area (Fig. 4).

(4) Position weatherstrip lower section to tab area, starting at corners install over tabs and work toward center.

(5) Install weatherstrip on fence at sides and upper opening. With hand pressure, seat weatherstrip fully on fence.

(6) With an assistant, slide upper edge of glass into channel of weatherstrip. Use a fibre tool to force weatherstrip lip over glass.

(7) Seat glass in weatherstrip, pounding glass, with palm of hand using an upward motion.

(8) Insert a fibre tool between weatherstrip and glass, at either corner, slide tool across top, and completely around weatherstrip to seat glass in place.

(9) Using a fibre tool and working across top, down sides and over bottom, force weatherstrip locking tab

MyMopar.com

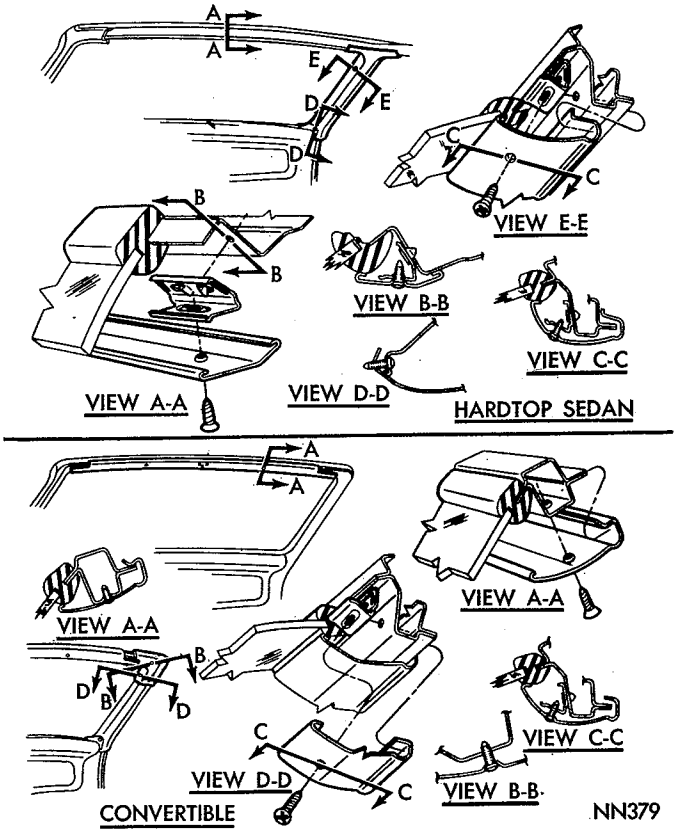


*Fig. 1—Windshield Garnish Mouldings (Belvedere—Satellite)*

into locked position (Fig. 3).

(10) Water test windshield area.

(11) Install exterior mouldings, wiper arms and blades.

(12) Install garnish mouldings, wiper arms and remove protective covering.

### *Valiant Models*

### *Removal*

(1) Place a protective covering over cowl, hood and

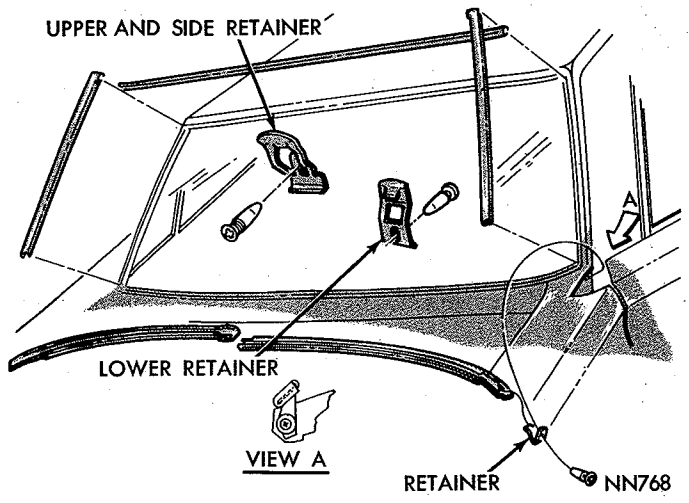


*Fig. 2—Windshield Outer Mouldings (Belvedere—Satellite)*

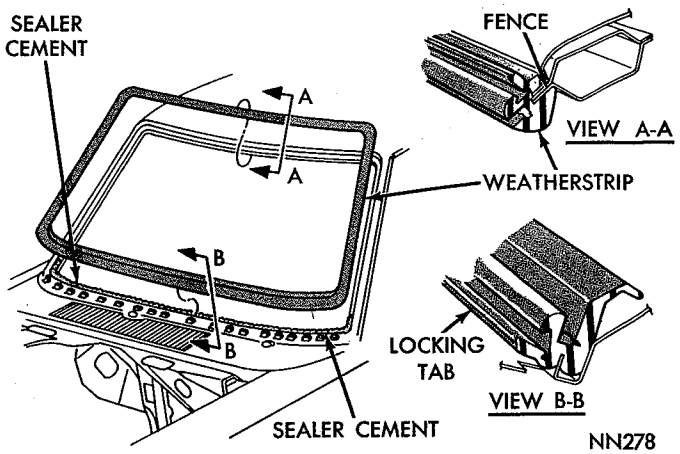


*Fig. 3—Windshield Weatherstrip (Belvedere—Satellite)*

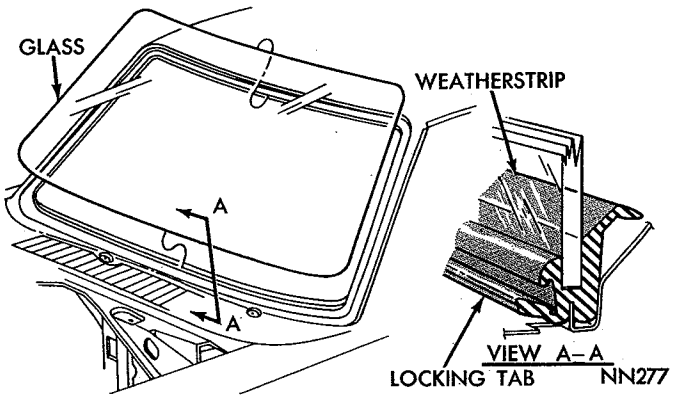


*Fig. 4—Windshield Installation (Belvedere—Satellite)*

fender area next to windshield.

(2) From inside car, remove windshield garnish mouldings and lower trim strip (Fig. 5).

(3) Remove windshield wiper arms and blades.

(4) Starting at bottom center of windshield, pry out end of mylar strip and remove strip from weather-

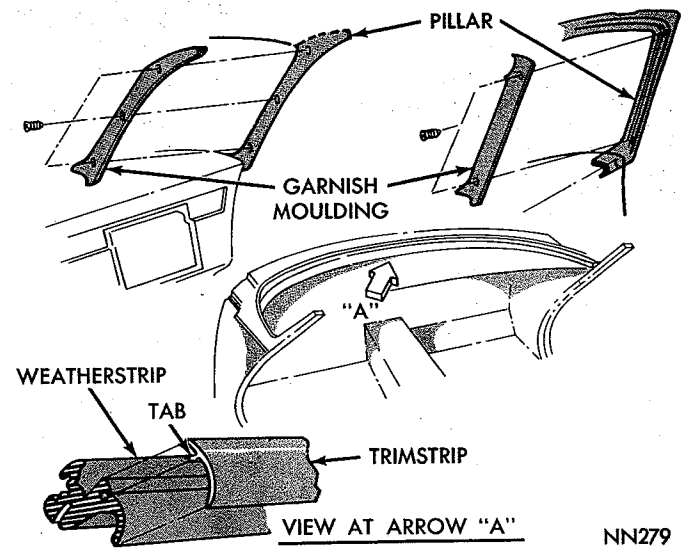


*Fig. 5—Windshield Garnish Mouldings and Trim Strip (Valiant)*

MyMopar.com

strip (Fig. 6).

(5) Insert tapered end of a fiber stick between weatherstrip and glass and carefully work weatherstrip from glass.

(6) With an assistant, apply hand pressure to upper side corner of glass and push glass out of windshield opening.

(7) Remove weatherstrip from fence if found to be distorted, cut or torn. Inspect fence for bends and rough surfaces.

### Installation

(1) If weatherstrip was removed, remove all sealer and foreign material from fence. Apply a small bead of cement in fence groove of weatherstrip.

(2) Position weatherstrip (Fig. 6) over fence, making sure it fits smoothly and evenly.

(3) Coat glass groove of weatherstrip with mineral spirits.

(4) With an assistant, insert top edge of glass into weatherstrip.

(5) Support glass on opening, insert a fibre wedge in groove of weatherstrip and strip in glass. Bump glass with palm of hand so glass is properly seated and centered.

(6) Use mineral spirits **only** as a lubricant and insert locking strip with a fibre tool starting at lower weatherstrip center. Do not stretch locking strip. Trim ends flush.

(7) Position, seat and insert extended lip of weatherstrip (Fig. 6) at top and sides (sides only on convertible).

(8) Water test windshield area.

(9) Install and adjust wiper arms and blades.

(10) Clean glass and remove protective covering.

(11) Install trim strip and garnish mouldings.

## Convertible Models—Belvedere—Satellite

### Removal

(1) Cover cowl, hood and fender area with a protective covering.

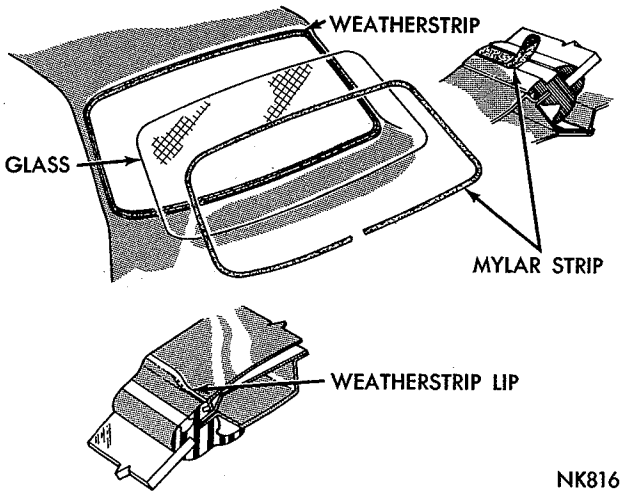


*Fig. 6—Windshield Replacement (Valiant)*

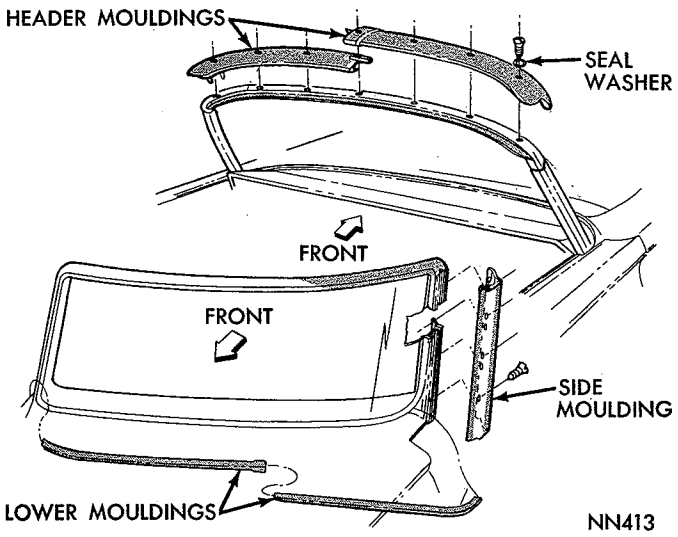


*Fig. 7—Convertible Windshield Mouldings (Belvedere—Satellite)*

(2) Release top locking mechanisms and push header from windshield frame to expose moulding retainer screws.

(3) Remove wiper arms and blades.

(4) Remove windshield outside mouldings (Figs. 7 and 8).

(5) Remove inner "A" post side mouldings.

(6) Remove sun visors and screws attaching header trim cap to header.

(7) Pry header moulding up slightly to clear moulding from weatherstrip, disengage from header and remove.

(8) Remove windshield in same method as other models.

### Installation

Install windshield in same manner as described for other models, then continue as follows:

(1) Position header cap moulding up against

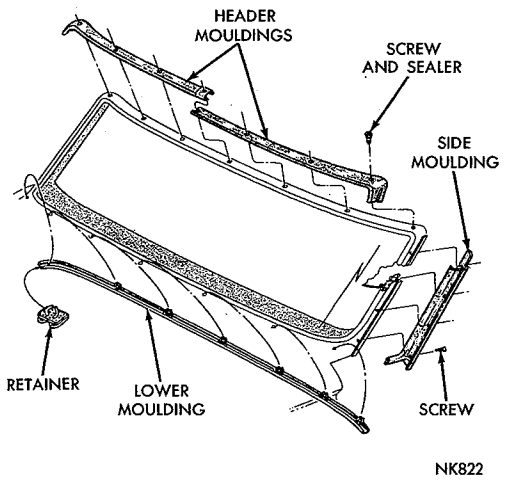


*Fig. 8—Convertible Windshield Mouldings (Valiant)*

MyMopar.com

weatherstrip, force moulding against weatherstrip, and press rear edge down over header.

(2) Install screws loosely to hold in position and lightly tap with a rubber hammer to seat. Be sure cap is evenly spaced across header.

(3) Tighten screws securely.

(4) Water test windshield area.

(5) Install windshield outside mouldings and "A" post moulding.

(6) Install sun visor, wiper arms and clean windshield.

### Fury Models

### Removal

(1) Cover cowl, hood and fender areas with a protective covering.

(2) Remove windshield wiper arms and blades.

(3) Remove windshield outside mouldings (Fig. 9) and inside garnish mouldings.

(4) Remove cowl grille panel.

(5) Using a fibre wedge, loosen weatherstrip from fence at top and sides on inside and outside areas.

(6) With an assistant supporting glass on outside, exert hand pressure at one of the lower corners to force glass and weatherstrip off of fence and seal.

(7) Remove glass and weatherstrip from opening.

(8) Inspect polyethylene seal on windshield opening for damage.

(9) Inspect fence area for burrs or misalignment and correct as necessary.

(10) If original weatherstrip is to be reinstalled, use extreme care and remove from glass.

(11) Remove all cement and sealer from weatherstrip and glass.

### Seals and Sealers

(1) Apply a ¼ inch bead of sealer down both windshield side frames to upper end of lower corners (Fig. 10).

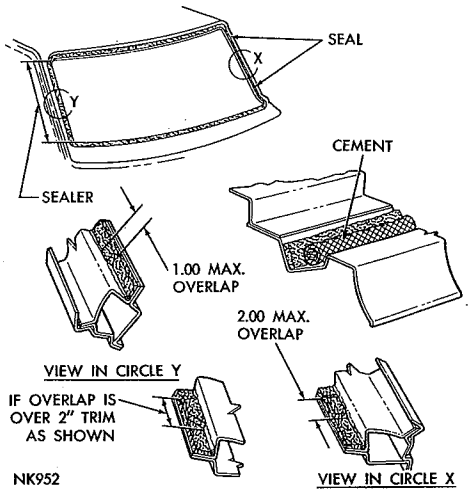


*Fig. 10—Windshield Seals and Sealers (Fury)*

(2) Apply polyethylene seal, if removed, to windshield opening fence starting at lower fence center, up left side, across top to center of fence and above sealer applied in step 1.

(3) Pressurize seal to fence with hand pressure.

(4) Apply opposite seal starting with a butt joint at lower fence.

(5) When seal is completely installed, seal should overlap at right hand side by one inch (maximum).

(6) If overlap is greater than two inches, trim off excess squarely (Fig. 10).

(7) Hand pressurize seals to eliminate all wrinkles or puckers.

(8) Apply a ⅜ inch bead of cement across cowl top panel at bottom of upstanding flange of windshield opening.

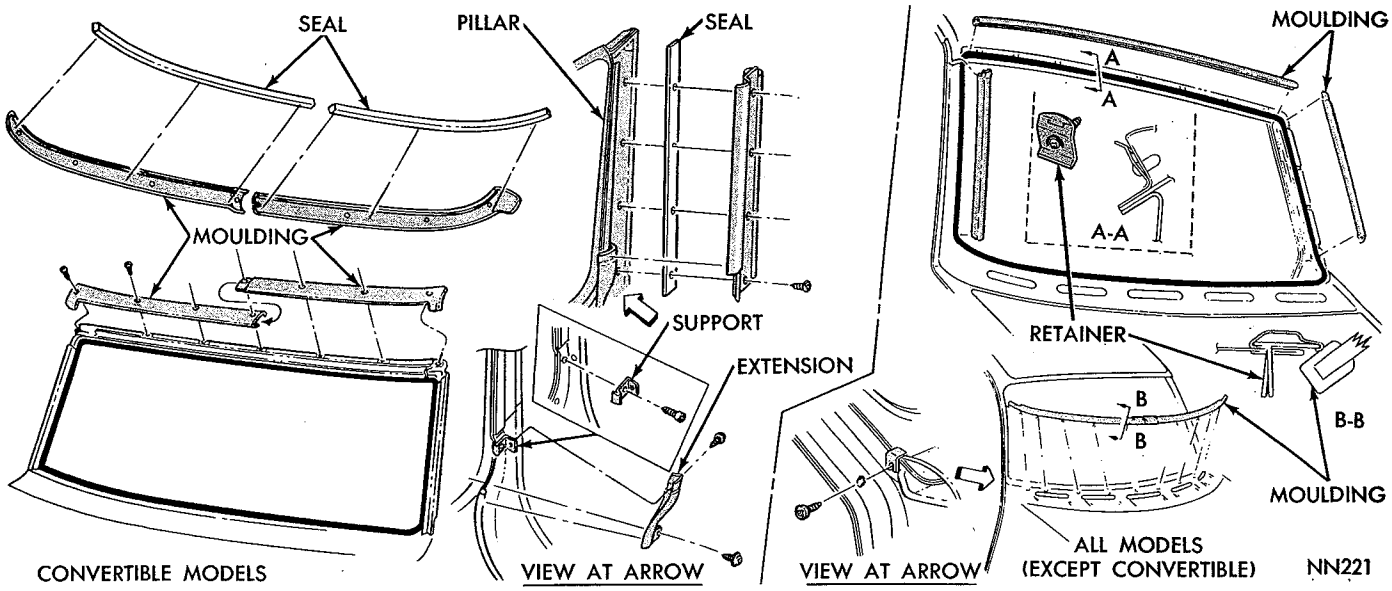


*Fig. 9—Windshield Mouldings (Fury)*

MyMopar.com

### Installation

(1) Apply sealer on each lip of windshield glass groove in weatherstrip and position glass in weatherstrip.

(2) Insert twine, starting at top center of weatherstrip, into fence groove portion of weatherstrip, across top and down both sides (Fig. 11).

(3) With an assistant position glass and weatherstrip on windshield opening.

(4) With pressure being applied against glass from outside, enter car and starting at one lower corner alternately pull ends of twine half way up sides, seating weatherstrip on fence.

(5) Applying constant hand pressure to glass sides, seat balance of weatherstrip on fence.

(6) Pressurize weatherstrip to seal with hand pressure to insure proper seating in opening.

(7) Remove all excess sealers and cements from glass.

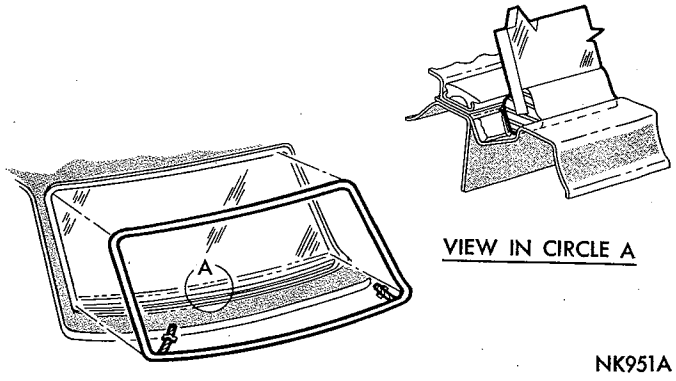


*Fig. 11—Windshield Installation (Fury)*

(8) Water test windshield area.

(9) Install windshield outside mouldings, cowl grille panel, wiper arms and blades and inside garnish mouldings.

(10) Remove protective covering.

## REAR WINDOW

### REPLACEMENT—Belvedere—Satellite Models

(1) Place a protective covering over deck lid, quarter panel and rear window areas. Remove rear window mouldings (Fig. 12).

(2) Using a fibre wedge, loosen weatherstrip from rear window fence, both inside and outside lips.

(3) With an assistant supporting glass on outside, from inside car, push against glass at one of the upper corners and remove glass and weatherstrip from fence.

(4) Place glass on a cloth covered bench and carefully remove weatherstrip.

(5) Remove all sealer from the glass, weatherstrip and fence.

### Installation

(1) Inspect weatherstrip fence to be certain it is clean, smooth and straight.

(2) Flow a continuous ribbon of cement on each lip and around entire length of weatherstrip glass groove.

(3) Install weatherstrip on rear window, making sure it is fully seated (Fig. 13).

(4) Install twine into fence groove of weatherstrip.

(5) The ends of the twine should be at top center section of weatherstrip (Fig. 13).

(6) With an assistant, position rear window and weatherstrip in rear window opening.

(7) With an assistant supporting glass in position, enter car and pull twine slowly to seat weatherstrip on fence.

(8) With palm of hand, tap rear window glass to make certain it is fully seated.

(9) Seal weatherstrip to fence areas, on outside only. Remove all excess sealer.

(10) Water test rear window area.

(11) Install window mouldings, clean glass and remove protective covering.

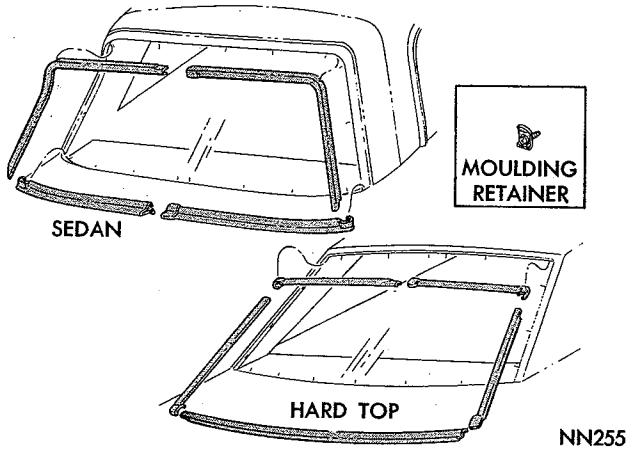


*Fig. 12—Rear Window Mouldings (Belvedere—Satellite)*

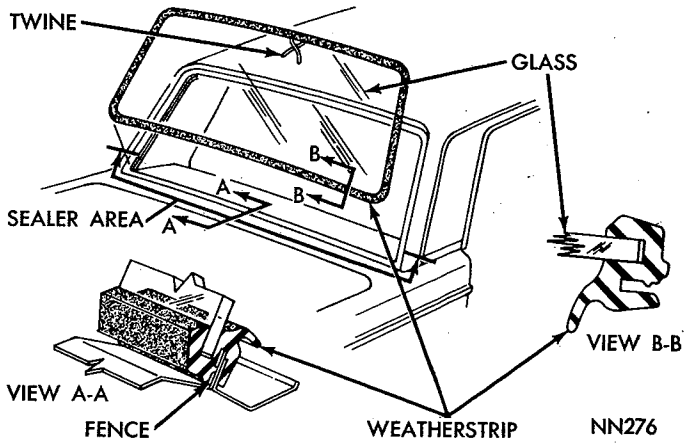


*Fig. 13—Rear Window Installation (Belvedere—Satellite)*

MyMopar.com

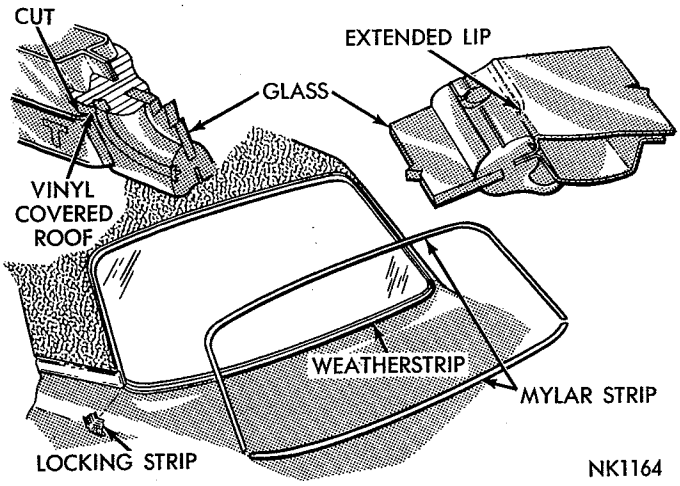


*Fig. 14—Rear Window—Valiant*

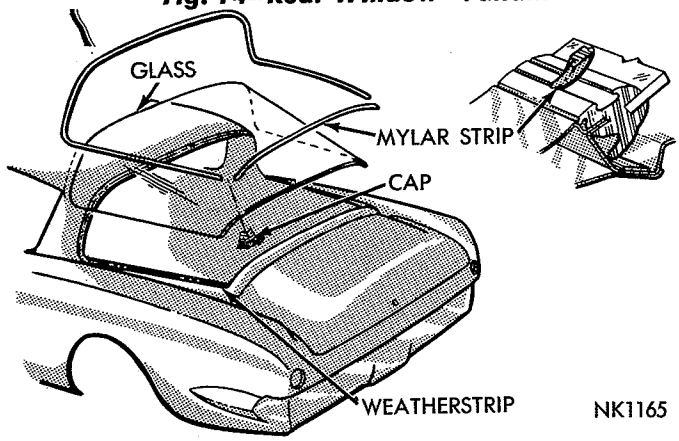


*Fig. 15—Rear Window—Barracuda*

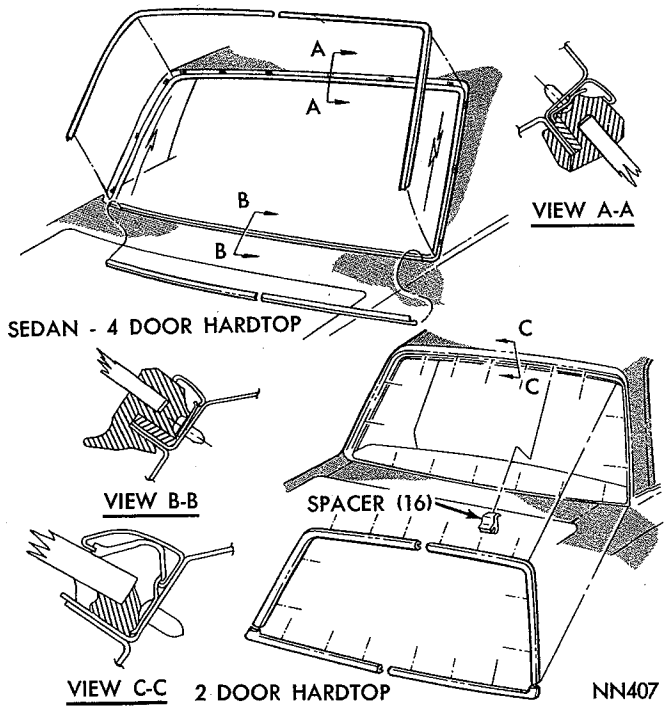


*Fig. 16—Rear Window Mouldings (Fury)*

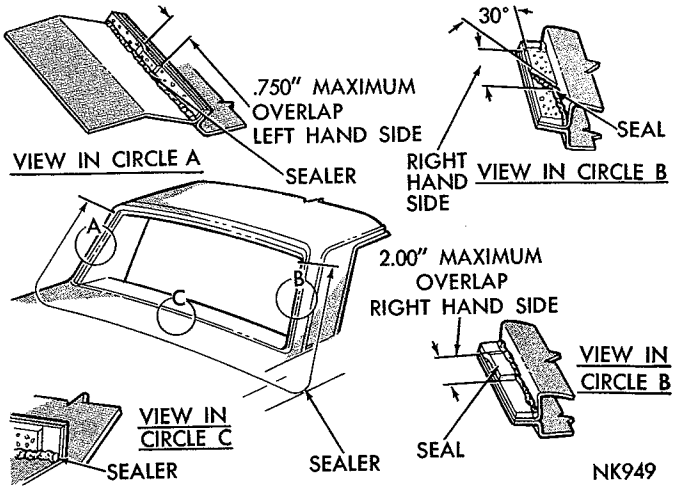


*Fig. 17—Rear Window Seals and Sealers (Fury)*

## Valiant Models

### Removal

(1) Starting at bottom of window, pry out mylar trim strip (Figs. 14 and 15) from weatherstrip.

(2) Insert a fibre strip between weatherstrip and glass and strip weatherstrip from glass.

(3) With an assistant supporting glass, force glass out from either upper corner of opening.

(4) Remove weatherstrip if distorted, cut or torn. Inspect fence for bends and rough surfaces.

### Installation

(1) If weatherstrip was removed, remove all old sealer from fence. Apply a small bead of cement in fence groove of weatherstrip.

(2) Position weatherstrip over fence, making sure it fits smoothly and evenly.

(3) Coat glass groove section of weatherstrip with mineral spirits.

(4) Center glass in opening and insert top edge into groove.

(5) Using a tapered fibre stick, work weatherstrip over glass edge. Bump glass into place with palm of hand.

(6) Air dry weatherstrip.

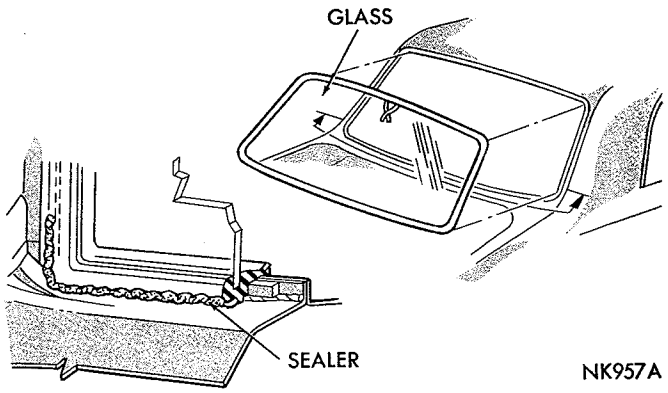


*Fig. 18—Rear Window Installation (Fury)*

MyMopar.com

(7) Apply sealing compound between glass and weatherstrip.

(8) Use mineral spirits as a lubricant and with a fibre wedge work trim strip into the rubber.

(9) Remove all excess sealer.

### FURY MODELS

#### Removal

(1) Place a protective covering over deck panel, quarter panel and rear window areas.

(2) Remove outside mouldings (Fig. 16) and inside garnish mouldings.

(3) Using a fibre wedge, loosen weatherstrip at fence, both inside and outside areas.

(4) With an assistant supporting glass, from inside car, apply pressure at one upper corner and force window and weatherstrip off of fence.

(5) Remove window from opening.

(6) Inspect polyethylene seal for damage.

(7) Remove weatherstrip from glass.

(8) If weatherstrip is to be reused, remove all sealers and cements from groove areas and fence.

#### Seals and Sealers

Inspect fence area for burrs and misalignment.

(1) Apply a ¼ inch bead of sealer across bottom of window opening and up both sides to lower edge of upper corners (Fig. 17).

(2) Position one polyethylene seal to fence at lower section first, above sealer applied in step 1.

(3) Hand pressurize seal to sealer.

(4) Apply upper seal starting with a ¾ inch overlap (maximum) at left side.

(5) Apply balance of seal and when fully installed seal should overlap lower seal at right side by 2 inches (maximum).

(6) If overlap is greater than 2 inches, trim off excess amount at approximately a 30 degree angle (Fig 17).

(7) Hand pressurize both seals to avoid wrinkles and puckers.

#### Installation

(1) Apply sealer cement to each lip of weatherstrip glass groove.

(2) Install weatherstrip on glass, making sure it is fully seated.

(3) Install twine into fence groove of weatherstrip starting at top center (Fig. 18).

(4) With an assistant, position glass and weather strip in opening.

(5) With glass supported on outside, enter car and seat weatherstrip on fence by pulling twine (Fig. 18 downward and toward center of glass.

(6) Seat glass in weatherstrip using hand pressure.

(7) Apply a ⅜ inch bead of sealer (Fig. 18) across full width and up sides to lower portion of weather strip and fence at the top corners.

(8) Remove all excess sealer and cement.

(9) Water test rear window area.

(10) Install garnish mouldings and outside mouldings.

(11) Remove protective covering.

## CONVERTIBLE

### INDEX


| | Page |
|---|---|
| Adjustments | |
| Backlight Wrinkles | 119 |
| Cable—Rear Bow Tension | 119 |
| Door and Glass | 117 |
| Header—Top | 117 |
| Hinges | 118 |
| Latching Mechanism | 117 |
| Major | 117 |
| Minor | 116 |
| Power Link | 118 |
| Prop Link | 118 |
| Roof Side Rail | 117 |
| Shifting Top | 118 |
| Stack Height | 118 |
| Cover Replacement (Fury—Valiant) | 12 |
| (Belvedere—Satellite) | 12 |
| Electrical Tests | |
| Circuit Breaker | 11 |
| Control Switch | 11 |
| Motor | 11 |
| Folding Mechanism | 11 |
| Raising or Lowering Top | 11 |
| Reservoir | 11 |
| Header | 12 |
| Roof Side Rail | 12 |
| Seals and Sealers | 12 |
| Well Liner | 11 |
| Weatherstrips | |


### GENERAL INFORMATION

The folding top structure of Fury and Belvedere—Satellite models is constructed from stampings and has inset folding linkage. Valiant models incorporate a cast frame and offset folding linkage.

The top fabric on Belvedere—Satellite models at the rear quarter and deck panel area is installed on the inside. The fabric is attached to a combination tacking strip and belt bar retainer. The retainer is attached with screws.

MyMopar.com

## SERVICE DIAGNOSIS

| Condition | Possible Cause | Correction |
|---|---|---|
| TOP AND WINDSHIELD HEADERS NOT MEETING AT CORRECT ANGLE | Incorrect side rail adjustment. | With top header locked in position, adjust front hinge. |
| IMPROPER MEETING (fore & aft) OF TOP AND WINDSHIELD HEADERS | Improper power link adjustment. | Adjust power link bracket in direction of movement desired. |
| TOP HEADER NOT ALIGNED WITH GUIDE DOWELS | Improper header adjustment. | Adjust header "fore or aft" to align with guide dowels. |
| AIR OR WATER LEAKS AT WINDSHIELD HEADER | Header latch not properly adjusted. | Adjust by turning hook in or out. |

## SERVICE PROCEDURES

### OPERATING THE TOP

**Raise or lower top only when vehicle is standing still. It is advisable to raise and lower the top at least once a month to keep the top mechanism in working condition.**

#### *To Lower Top*

Release safety catch, pull handle down and to the rear and push top free of the header.

Be sure the top well compartment is free of articles. Unzip the rear window and position carefully in the well. **Make sure all wrinkles are removed.** Operate engine in neutral at a speed slightly above idle. Turn control switch to the right. As the top is being lowered, push upward on the stay pads, between roof bows to make certain the material folds are outboard of the bows, or stop folding mechanism approximately two feet from stacked position and push top material and stay pads out from between the bows. Lower the top completely. Fasten the top boot over the compartment.

#### *To Raise Top*

Unsnap top boot at sides and rear and fold into storage compartment. Turn control switch to the left and hold in this position until dowels seat in their sockets. Zip up rear curtain. Pull top down firmly and push locking handle all the way forward until the safety catch engages.

### RESERVOIR

Measure fluid level **only** when top is lowered. Insufficient fluid in the system may cause top to raise slowly or cause noise in the pump and motor. Measure fluid level and if low, look for a leak due to a broken line or a loose connection. Fill reservoir until fluid runs out of the filler holes. Use only AQ-ATF Suffix "A" type transmission fluid. After filling reservoir, raise and lower top several times to expel air that may be trapped in the system.

### FOLDING TOP MECHANISM

The folding top mechanism (Figs. 1 and 2) consists of two cylinders, a piping system, an electric motor, a pump and reservoir assembly, and a double-throw rotary switch. The wiring and motor are protected by a separate circuit breaker.

The cylinders are serviced only as an assembly. The reservoir end plate "O" ring is replaceable. The pump cover plate is serviced as an assembly and the rotors are serviced as a package with the "O" rings.

### ADJUSTMENTS

Top adjustments are of two classifications—minor and major. The minor adjustments are easily accessible and can be made without any major disassembly.

#### *Minor Adjustments*

The minor adjustments are provided to assist in aligning the top and windshield headers to prevent

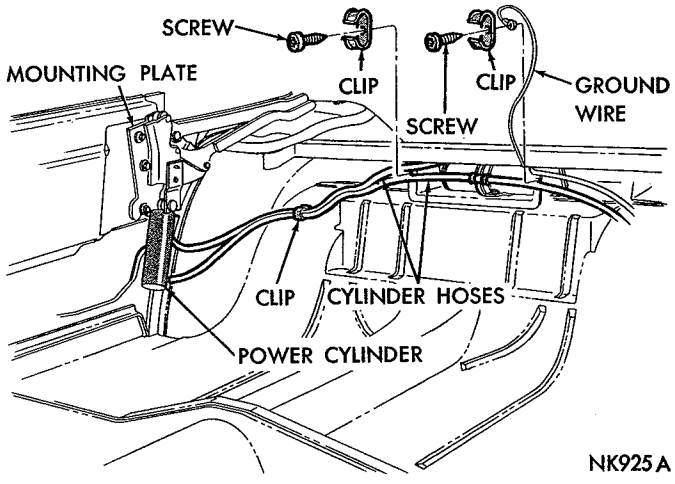


*Fig. 1—Folding Top (Belvedere—Satellite—Fury)*

MyMopar.com

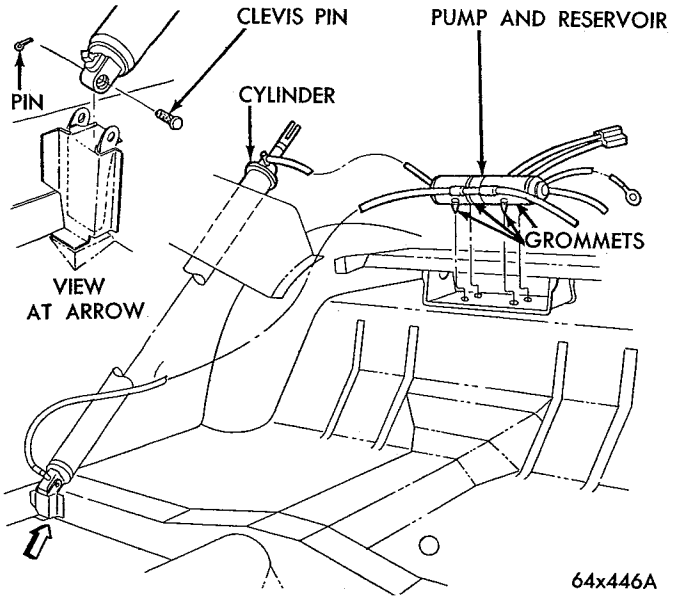


*Fig. 2—Folding Top (Valiant)*

water and air leakage into this area and to assure ease of operation in raising and lowering the top. They are also provided to correct alignment of the roof side rails with door and quarter glass and to prevent air and water leakage. Adjustments are also provided to remove wrinkles in the top material.

### Major Adjustments

The major adjustments are at the prop control link bracket and the power cylinder mounting brackets. These adjustments are necessary to improve roof side rail alignment if minor hinge and header adjustment do not completely correct the condition.

### Door and Glass Alignment

Before making any top adjustments, doors, vent wings and door and quarter glass must be properly aligned. Misalignment in any of these areas make it impossible to obtain satisfactory results from top adjustments alone. Glass up-stop adjustments should be made after the correct roof side rail alignment to limit the upward travel of the glass and to assure effective sealing between the roof side rail weatherstrip and glass.

### Latching Mechanism

Good sealing at the frontal area is dependent upon proper positioning of the top header on the windshield header. The header locating dowels are cast into the latching mechanism housings and engage sockets in the windshield header to correctly position the header.

The amount of pressure exerted by the weatherstrip against the finish mouldings is controlled by the latching mechanisms attached to the top header.

The locking and unlocking effort of the latching mechanisms are adjustable to control the pressure on the weatherstrip.

### Header Adjustments

The top header is adjustable at the front roof side rails to permit fore-or-aft and lateral movement. The header is attached to the side rails by two header-to-side rail screws on each side (Figs. 3 and 4).

Incorrect alignment between the top header and the windshield finish mouldings may result in air or water leakage. Inspect the clearance between the header and the finish moulding for uniformity. If the top header is too far forward at one end or all across the finish moulding, the interference between the header and the finish moulding may prevent proper pressure on the weatherstrip when the top header is latched. This condition can also cause objectionable high locking and unlocking effort. The misalignment may also result in making it difficult to engage the top header locating dowels in their sockets.

To eliminate interference between the header and finish moulding, loosen the header-to-side-rail screws (Figs. 3 and 4) and adjust header to provide proper clearance.

Forward movement of the header will be limited by the amount of top material. Inspect the top header dowel engagement and if there is interference between the dowels and sockets, adjust the header.

### Roof Side Rail Alignment

The roof side rail structure (Figs. 3 and 4) consists of three separate rails, hinged together to enable the top separate rails, hinged together to enable the top to fold into the well. Hinges are provided between the front and center rails and the center and rear rails. The rails must be in good alignment and parallel to

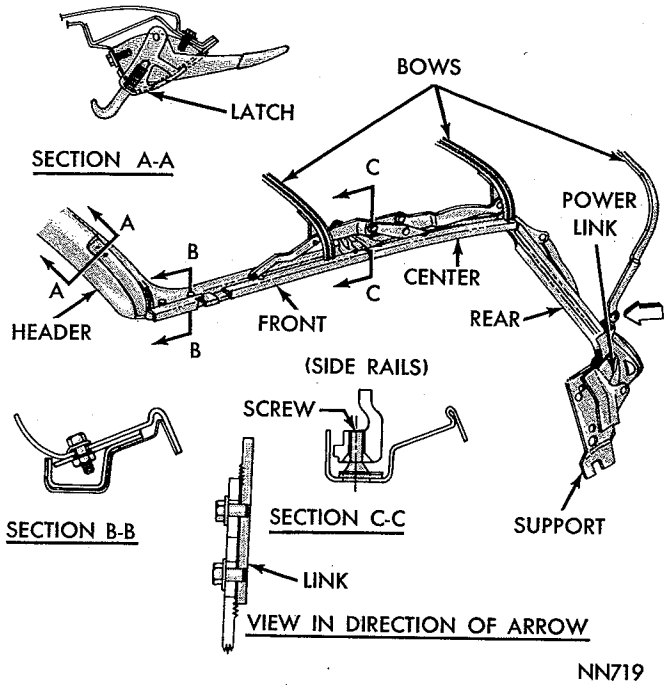


*Fig. 3—Folding Structure and Linkage (Belvedere—Satellite—Fury)*

MyMopar.com

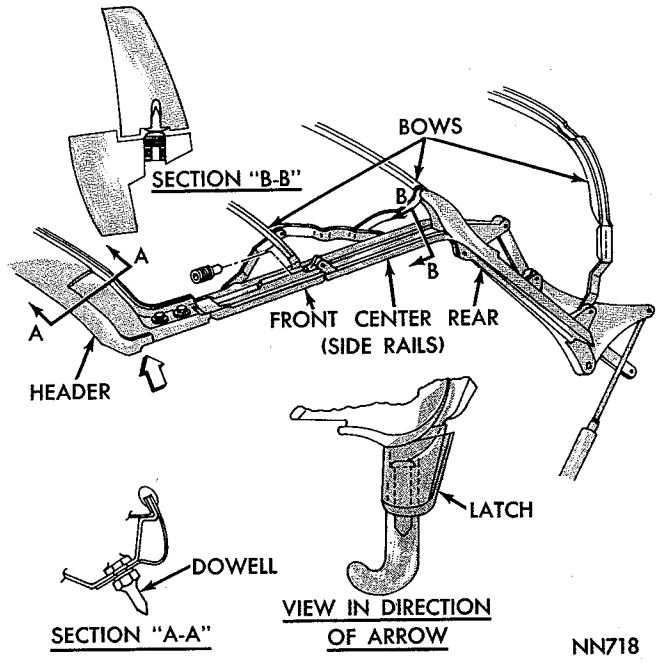


*Fig. 4—Folding Structure and Linkage (Valiant)*

top edges of vent wings, door and quarter glass to provide a good weatherseal. Alignment of the rails is controlled by the power link assemblies side rail structure mounting support assembly, the main control prop link and the front hinge set screw.

### Front Hinge

**To avoid stripping the set screw threads, unfasten the top header latches to relieve tension on the linkage before adjusting the set screws.**

Leakage between the top and door or quarter glass may be caused by poor contact between roof side rail weatherstrip and glass or only a partial contact between side rails and top edge of glass. If inspection shows leakage is due to incorrect side rail alignment at the front hinge, adjust hinge set screw until front and center side rails are parallel.

### Belvedere—Satellite—Fury Models

The front hinge set screw is accessible from the bottom surface of the side rail directly below the hinge. Very little adjustment is possible at the hinge, however it is also used as a means of eliminating noise at the front hinge by progressively tightening until noise has disappeared.

### Valiant Models

The front hinge set screw is accessible from the top surface of the front rail and angles downward to the rear. It contacts the steel drive stud in the center rail to open or close the hinge, as required.

### Rear Hinge—Valiant Models

The rear hinge set screw is located in the underside of the center rail and angles upward and to the rear. It contacts the drive stud in the rear rail. Access to the set screw can be made by removing the center roof side rail weatherstrip and retainer.

### Main Control Prop Link

The main control prop link incorporates serrated adjusting links on both sides. Loosen screws just enough to permit moving links up or down.

Lengthening link causes the center rail to rotate on its pivot in the rear rail, lowering the front and center rails to improve weatherstrip fit with door and quarter glass.

### Stack Height

(1) Remove rear seat cushion, back and quarter trim panels.

(2) Adjust the main control prop link.

(3) Lower top assembly into well and loosen the lower two of three mounting bolts (Fig. 1).

(4) Force lower portion of mounting plates to rotate toward front of car as far as possible while exerting pressure downward on both sides at top of side rails.

(5) Tighten mounting bolts and inspect stack height.

(6) Install rear seat back, cushion and quarter trim panels.

### Top Shifts To One Side

If it is necessary to pull top to one side to engage locating dowels in their sockets or the top shifts to one side when raising top header from the windshield header, inspect positions of main control prop links Links not adjusted uniformly, change operating angle of linkage causing top to twist when it is raised. When one link has been adjusted, inspect the link on other side for correct positioning.

### Power Link

It should not be necessary to adjust the power link (side rail structure mounting supports) unless top assembly has been removed for servicing or replacement of linkage parts. When this is done, be sure both sides are adjusted to provide identical travel of the piston rods.

The power links are part of the folding top frame which when loosened, permit forward or rearward movement. It is important the links on both sides be positioned at approximately the same position. If one is positioned rearward of the other one, it would cause the power piston rod on that side to start actuating the linkage slightly ahead of the piston rod on the opposite side. This can cause one side of the top to twist slightly.

The rearward position of the link also increases the travel of the power piston rod, resulting in a small amount of overtravel when top is fully raised. When power is turned off, the power piston assumes its normal position from leak-back in the hydraulic system.

MyMopar.com

### Rear Bow Tension Cable

Two steel cables attached to the rear bow and the top well are provided to keep the number 3 bow from moving forward and wrinkling the top material. They also prevent excessive tension on the backlight zipper. The upper end of the cables are attached to the bow by shoulder bolts. The lower end is threaded into a clinch nut attached to a bracket in the well which permit cables to be shortened or lengthened to increase or decrease tension (Fig. 5). **Before attempting to adjust the cables, unfasten the top header latches to relieve tension on the linkage.**

### Wrinkles In Backlight

Cable adjustment may cause wrinkles in the backlight area. To correct this condition, it will be necessary to remove mouldings and retainers and relocate the backlight and quarter trim.

Place a strip of masking tape on deck panel directly behind mouldings. Mark screw locations on tape to aid in reassembly.

Remove moulding screws, moulding, retainer screws and retainer. Stretch backlight and quarter trim to remove wrinkles. Trim excess material that extends beyond retainer. Install retainers and mouldings.

## ELECTRICAL TESTS

### Circuit Breaker

Disconnect the wire harness connecter at the motor (Fig. 6) and connect one wire of a test light to brown wire and the other to a good body ground. Position the instrument panel switch in the "UP" position. The bulb should light. Repeat this test with the yellow wire but position the switch in the "DOWN" position. If the bulb fails to light either time, and all wire terminals are tight, replace the circuit breaker.

### Control Switch

Disconnect red wire at switch (Fig. 6) and hold it

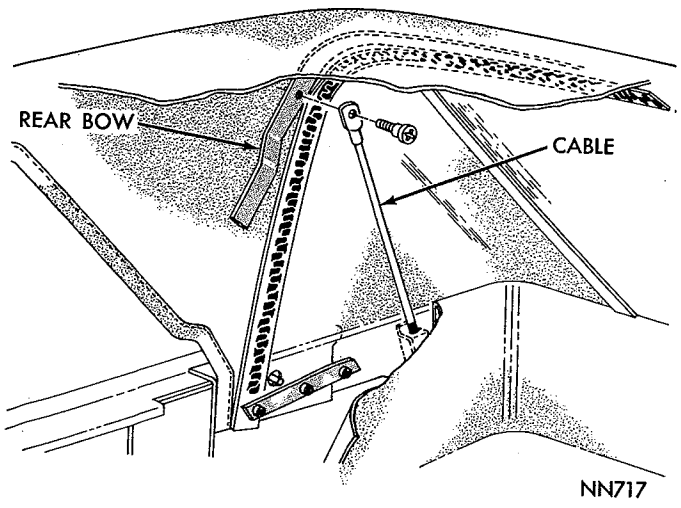


*Fig. 5—Rear Bow Tension Cable (Valiant)*

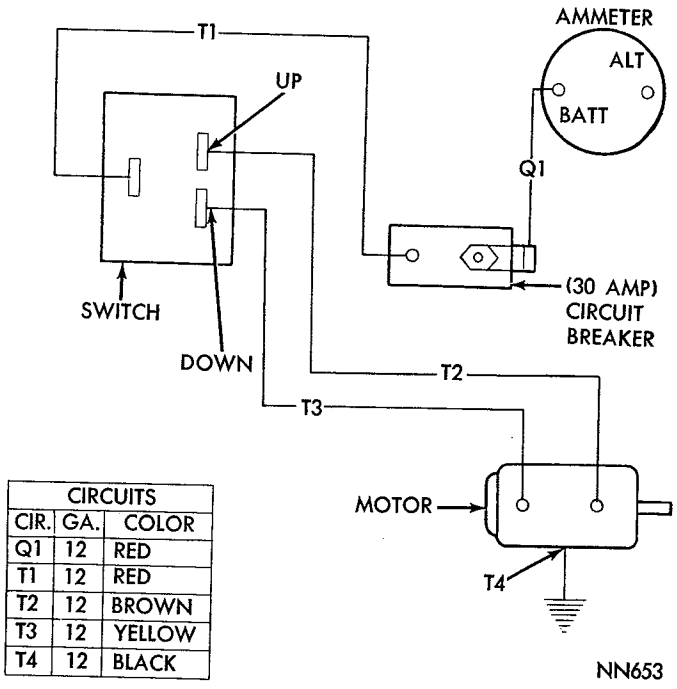


| CIRCUITS | | |
|---|---|---|
| CIR. | GA. | COLOR |
| Q1 | 12 | RED |
| T1 | 12 | RED |
| T2 | 12 | BROWN |
| T3 | 12 | YELLOW |
| T4 | 12 | BLACK |

*Fig. 6—Wiring Circuit*

firmly against yellow wire terminal on switch. The top (if raised) should start to lower. Repeat this test with the brown wire. The top (in lowered position) should start to rise. If top operates during these tests, but fails to operate when the control switch lever is moved to "UP" or "DOWN" position, the switch is at fault and should be replaced. If the top fails to operate during these tests inspect wires between switch and motor.

### Pump Motor

Should the test bulb light on one wire but not the other, inspect wire harness for a broken wire. If the bulb lights in both tests, place one wire of the test light to the black wire terminal on the motor and the other wire to a good body ground. Position the switch in either "UP" or "DOWN" position. If bulb should light inspect for a poor ground connection or broken black wire. If the bulb does not light and the wire harness test is positive, replace the motor.

## WELL LINER

### Valiant—Fury (Fig. 7)

### Removal

(1) Place a protective cover on deck upper panel and quarter panel areas.

(2) Place masking tape below lower edges of backlight and quarter panel belt mouldings and remove mouldings.

(3) Remove well flap retainers from inner quarter-panel and disconnect rear bow tension cable (Fig. 5) at the lower bracket.

(4) Mark location of moulding retainer screw holes

MyMopar.com

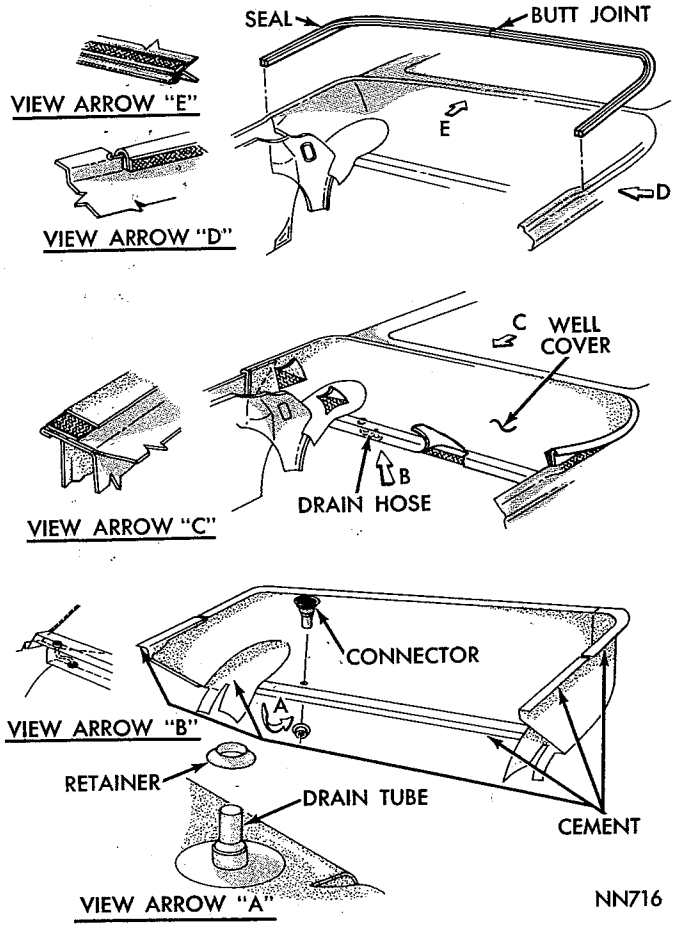


***Fig. 7—Well Liner (Valiant)***

on masking tape and remove retainers.

(5) Mark position of curtain and top cover screw holes on masking tape and remove screws.

(6) Remove well liner, seals and sealers.

(7) Clean sealing and cementing areas thoroughly to assure good adhesion on new liner.

### *Installation*

(1) Install a strip of sealer cement, to top of quarter outside panels and deck opening upper panel (at belt area).

(2) Apply an even coat of cement over sealer cement and adjacent metal surfaces. The width of cement should not exceed width of well liner.

(3) Apply an even coat of cement to rear seat back support and well liner attaching surfaces on wheelhousings.

(4) Apply double adhesive sided foam pad to wheelhouse caps at rear seat back supports.

(5) Install drain tube connector and retainer to new liner.

(6) Install an even coat of cement to bottom edge of liner attaching edges.

(7) Position new well liner in well and press attaching surfaces to cemented surfaces.

(8) Slit liner (2 places) on rear seat back support for tension cables and attach tension cables.

(9) Apply polyethylene seals 60 inches long to belt areas on quarter outside panels and to deck upper panel over installed well liner.

(10) Pierce seals and liner cover at retainer screw holes, using reference marks on masking tape.

(11) Position drain hose in floor pan plug and install on liner connector.

(12) Position top cover and rear curtain ends to alignment marks and install retaining screws.

(13) Install mouldings and retainers.

(14) Adjust tension cables and install well flap retainers.

(15) Remove masking tape and protective covers.

### *Belvedere—Satellite (Fig. 8)*

The well liner is attached to the tacking strip in the quarter panel belt area with the use of stud snap-on type fasteners.

When installing the liner, apply a thin coat of cement to the front face of the liner lower edge approximately two inches wide at the area where liner attaches to the upper face of the rear seat back support. Apply cement two inches wide to the area contacting the wheelhouse cap.

## WEATHERSTRIPS

### *Roof Side Rail*

After roof side rails have been aligned, inspect side rail weatherstrip to make sure it is providing a good seal at top of door and quarter glass.

If weatherstrip is not sealing properly, the retainer can be adjusted.

The retainer has elongated attaching screw holes which permit in and out adjustment.

Raise glass until top edge of glass curls outer lip of weatherstrip inward just enough to contact inner lip. Adjust up-stops to limit further upward travel of glass.

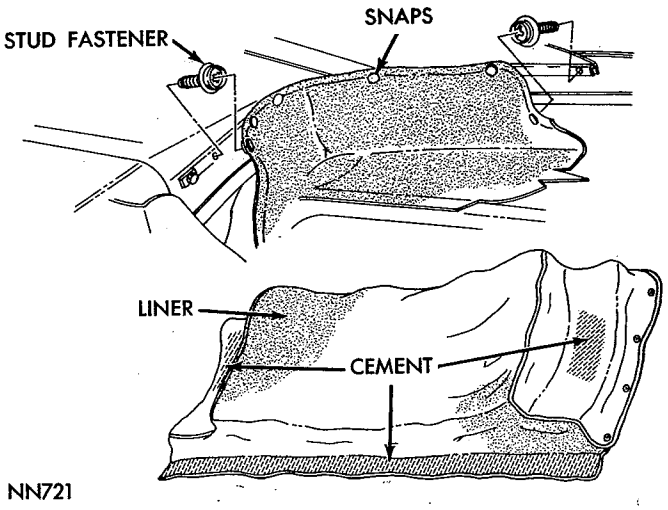


***Fig. 8—Well Liner (Belvedere—Satellite)***

MyMopar.com

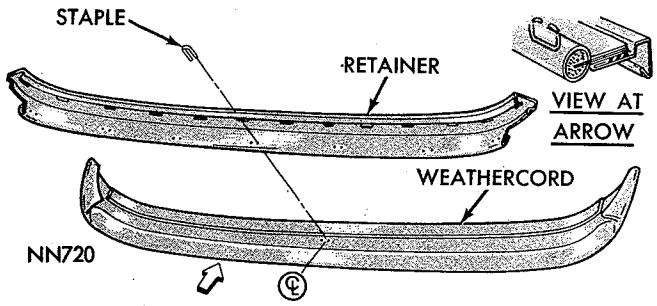


*Fig. 9—Top Header Front Weatherstrip (Valiant)*

### Top Header Front Weatherstrip

The entrance of water and air between the top header and windshield header is eliminated by a tube type weatherstrip (Figs. 9 and 10) secured to the underside of the top header. The forward edge of weatherstrip contacts windshield header outside moulding.

### Seals and Sealers

When repairing or replacing a seal, or weatherstrip at the header and pillar areas, care should be exercised to be certain seals and weatherstrips are firmly seated in correct alignment and are free of twists. Clean all areas thoroughly, before installing weatherstrips and seals.

## COVER REPLACEMENT—Fury and Valiant

### Removal

A visual inspection of the weatherstrips for damage or excessive wear should be made before removing the top cover. Test the adjustment of the rear tension cables. Inspect the top cover cables to make sure they are correctly connected. Inspect the top cover stay pads for excessive wear or moisture stains.

(1) Place protective covers over the deck lid, deck lid upper panel, hood and cowl areas.

(2) Apply masking tape directly below the mouldings at the rear quarter panels and rear window.

(3) Remove mouldings at quarter panels and from bottom of rear window.

(4) Mark location of moulding retainer screws on masking tape at quarter panel areas and the first two screws at each side of rear window moulding retainer (Fig. 11).

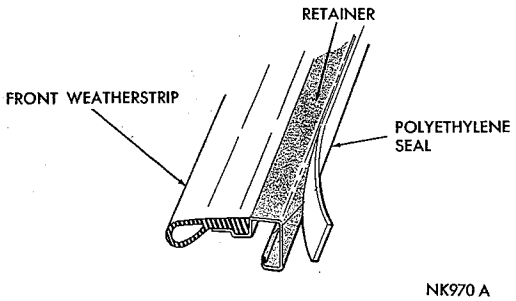


*Fig. 10—Top Header Front Weatherstrip (Belvedere—Satellite)*

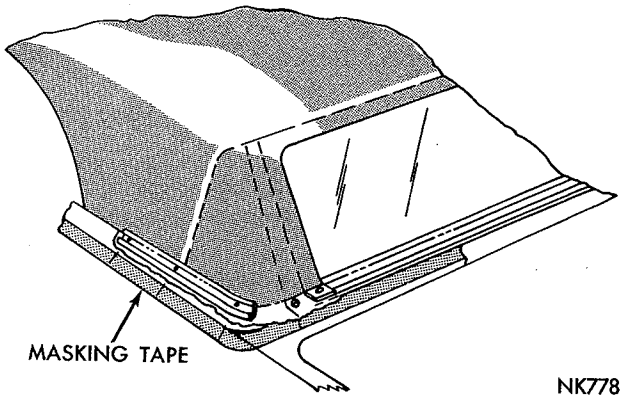


*Fig. 11—Marking Retainer Screw Hole Locations*

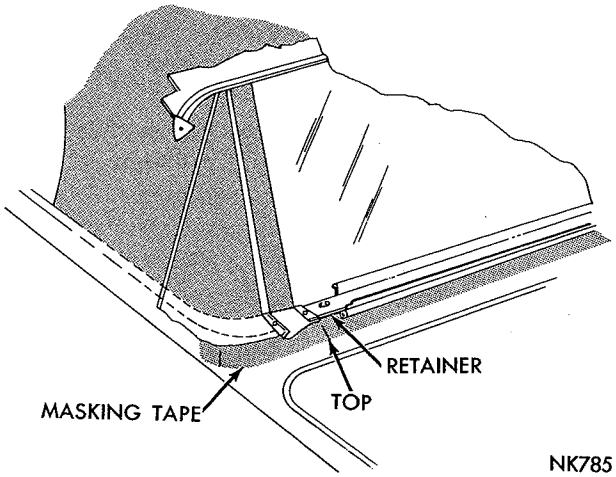


*Fig. 12—Marking Cover End Position*

(5) Mark location of top cover end at rear window on masking tape (Fig. 12).

(6) Remove retainers at quarter panels and at corners. Bend ends of rear window moulding retainer upward (Fig. 13) to expose rear curtain padding attaching screws and mark location of screws on masking tape.

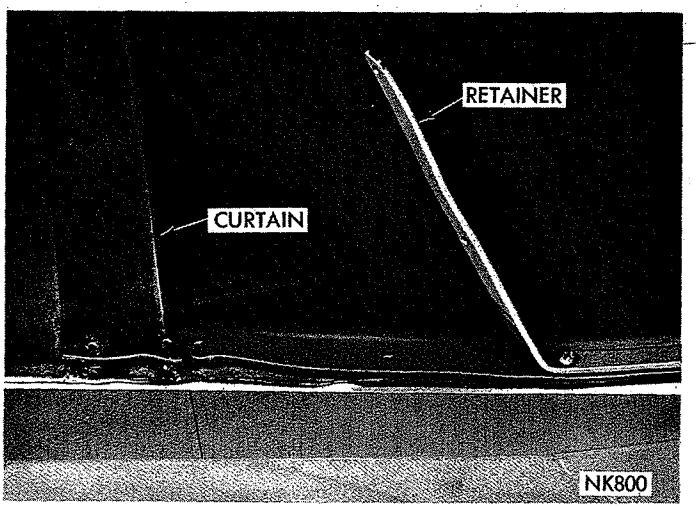


*Fig. 13—Marking Curtain End Position*

MyMopar.com

(7) Mark location of rear curtain material end on masking tape at quarter panels and rear window area (Figs. 13 and 14).

(8) Remove screws and retainers from ends of tacking strip on rear bow.

(9) Spread tacking strip to expose attaching staples.

(10) Using a sharp pointed tool remove staples and tacking strip. **Use care not to damage the top material if the original cover is to be reinstalled. In some instances the staples ends may have become peened over and if excessive effort is required to remove them, it is advisable to cut the heads off the staples and remove the pieces after the top cover has been removed, otherwise damage to the top material may result.**

(11) Remove staples and tacks (one tack used on each side at binding areas attaching top cover to rear bow.

(12) Unsnap top boot and lay over rear seat back.

(13) Unzip the backlight and lay in well, making sure all wrinkles and bends are removed.

(14) Prop top off of header and remove moulding from top header. The moulding attaching screws are located under the weatherstrip.

(15) Raise top to the ½ open position and remove rear roof rail weatherstrip (Fig. 15). Mark location of retainer screws on roof rail (Fig. 16) to aid in reassembling, and remove retainer.

(16) Remove top and rear curtain material from roof rail.

(17) Raise top completely and remove quarter panel trim and top material retainers in the well area.

(18) Remove sealing tape, drive nails and tacks at top header (Fig. 17).

(19) Remove staples, drive nails and tacks attaching top material to header.

(20) Mark location of top material bead on ends of the cover pads.

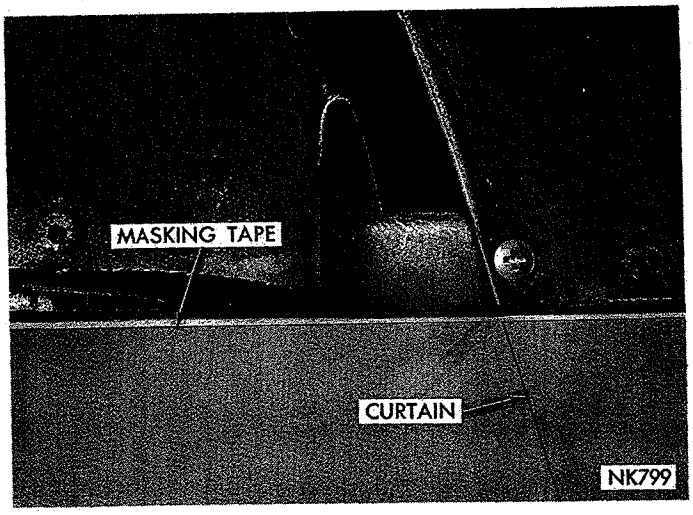


*Fig. 14—Marking Curtain End Partition at Quarter Panel*

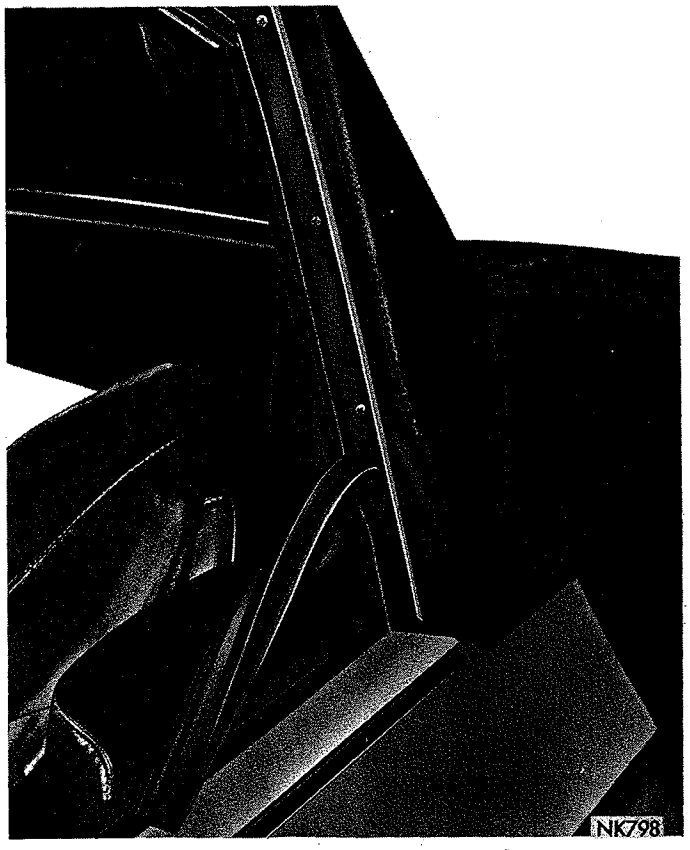


*Fig. 15—Rear Roof Rail Weatherstrip*

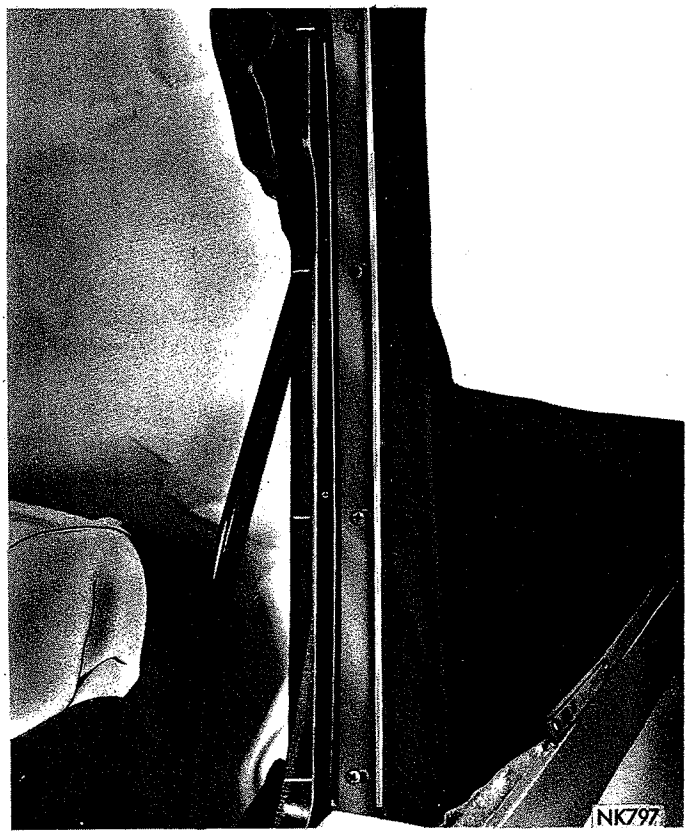


*Fig. 16—Rear Roof Rail Weatherstrip Retainer*

MyMopar.com

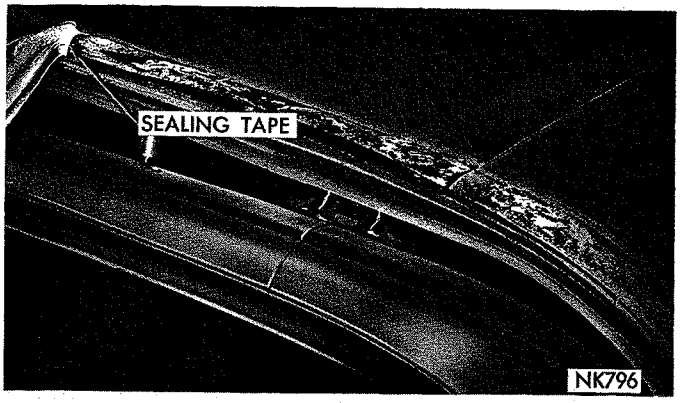


*Fig. 17—Sealing Tape at Top Header*

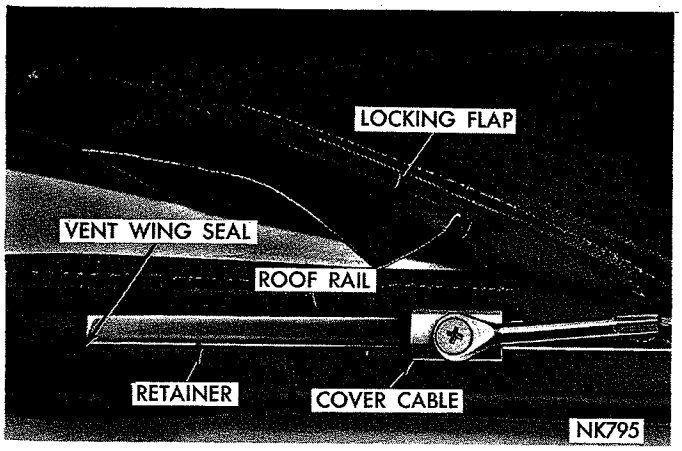


*Fig. 18—Cover Locking Flaps*

(21) Loosen vent wing seals at corners.

(22) Remove front screws from front roof rail weatherstrip retainers and remove locking flaps from between retainer and roof rail (Fig. 18).

(23) Remove cover cables at front rail weatherstrip retainers and at rear pillars. If original cover is to be reinstalled tie a cord to one end of cables prior to removing. When cables are removed cord should be left in listing.

(24) Remove top cover from the folding linkage.

## Installation

Prior to installing top cover, inspect roof bow felt pads (Fig. 19) for moisture or damage. The pads are a

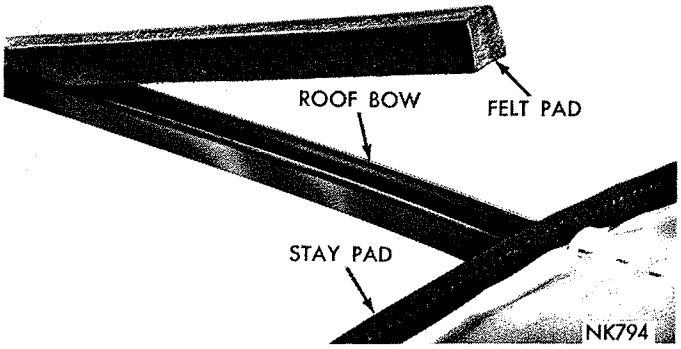


*Fig. 19—Roof Bow Felt Pads*

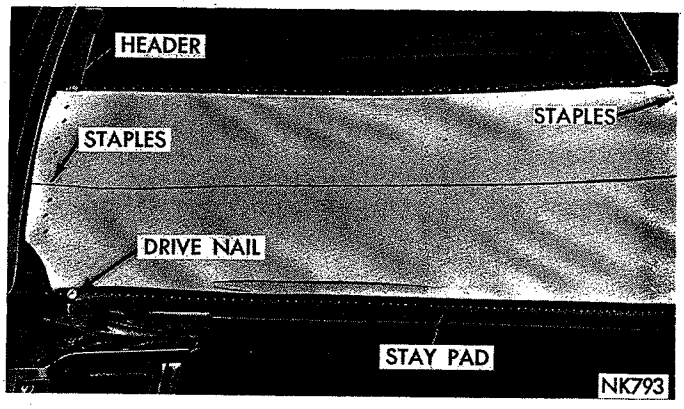


*Fig. 20—Cover Stay Pads*

press fit in the bows. The cover stay pads should be inspected for damage and moisture. The stay pads are attached to the header and roof bows with staples (Fig. 20). The rear window zipper top half is attached to the rear bow with staples (Fig. 21).

(1) Insert cables in cover listings. Use cords to install cables in original cover.

(2) Locate and mark center line on top header, rear bow, and at each end of new cover.

(3) Position cover on folding top and align center line marks.

(4) Install rear window on cover and connect zipper.

(5) Block top header off of windshield header, approximately four inches, to relieve tension on cover when it is being positioned on inner quarter panel in well area.

**The procedure for installing a new cover differs slightly from that of reinstalling the original cover. When installing a new cover, the procedures outlined in steps 6, 7, 9, 10, 11, 14 and 16 should be performed on both sides, whereas the procedures for reinstalling the original cover in steps 6, 7, 9, 10, 11, 14 and 16 should be performed on one side only.**

(6) Position cover on quarter panel in well area and

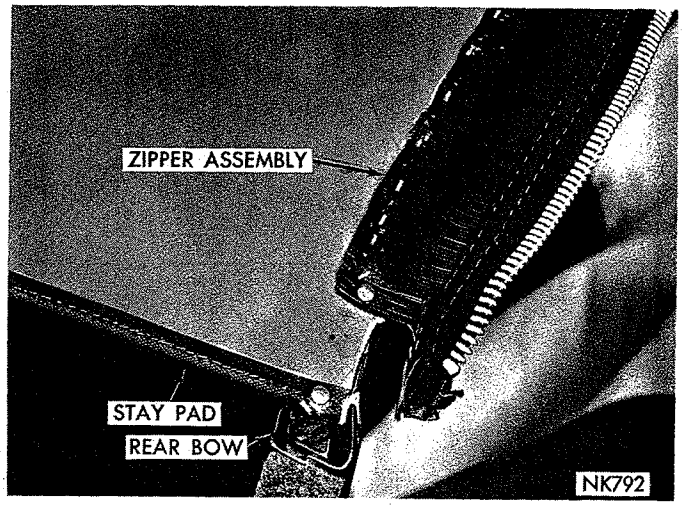


*Fig. 21—Zipper Attachment at Rear Bow*

MyMopar.com

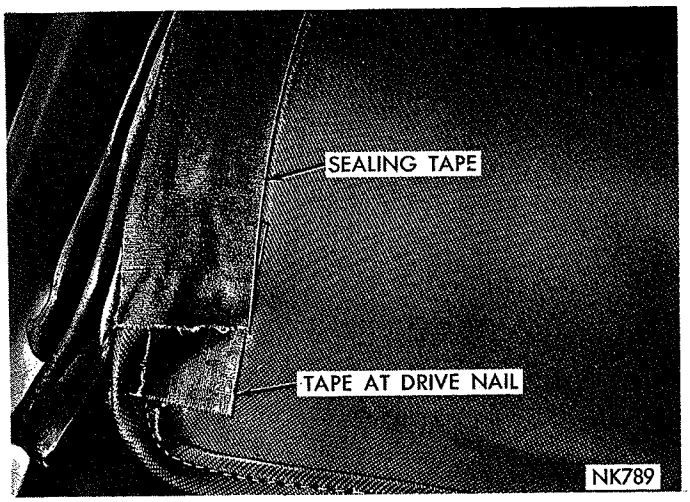


*Fig. 22—Installing Sealing Tape at Header*

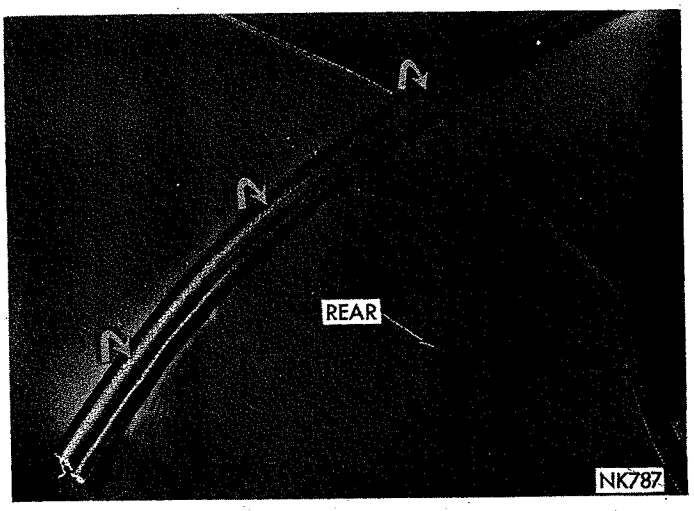


*Fig. 24—Folding the Tacking Strip*

install retainer. **Do not tighten.**

(7) Install screws attaching curtain to quarter panel making sure center line marks on bow and cover end are in alignment.

(8) Make certain center line at front of cover is in alignment with center line on header and press cover over the cover positioning barb on header.

(9) At the rear window area, align end of curtain with mark on masking tape and install screw.

(10) Align end of cover with mark on tape (Figs. 12 and 13). Bend retainer down over cover and install screw. On new covers, use a sharp pointed tool to penetrate material over screw hole.

(11) Install retainers over cover at quarter panels.

(12) Pull material into position at corner of windshield header and align cover with mark on pad end.

(13) Tack cover into position at corner and bead area only. Space tacks approximately one half inch apart.

(14) With cover in position at quarter panel and center line marks in alignment, tack cover to corner and bead area only of roof bow (Fig. 14).

(15) Repeat steps 10, 11, 12, 13 and 14 on opposite side.

(16) Connect cover cables at both sides. Use care not to bend bracket on weatherstrip retainer (Fig. 18).

(17) Lock the header in place and inspect the fit of cover at roof bow and top header.

(18) Install moulding retainers at quarter panels.

(19) Raise top to one half open position. Apply a bead of rope type sealer to back of rear roof rail weatherstrip retainers.

(20) Apply cement to the rear roof rail and between curtain and cover at area where they fit on roof rail and position on rear pillar.

(21) Position weatherstrip retainers on roof rails and using a sharp pointed tool align screw holes in curtain and cover with holes in roof rails. On new covers use tool to make holes in cover.

(22) Install retainer screws and weatherstrips (Figs. 15 and 16).

(23) Raise top completely and lock in position on header.

(24) Open and close both front doors several times

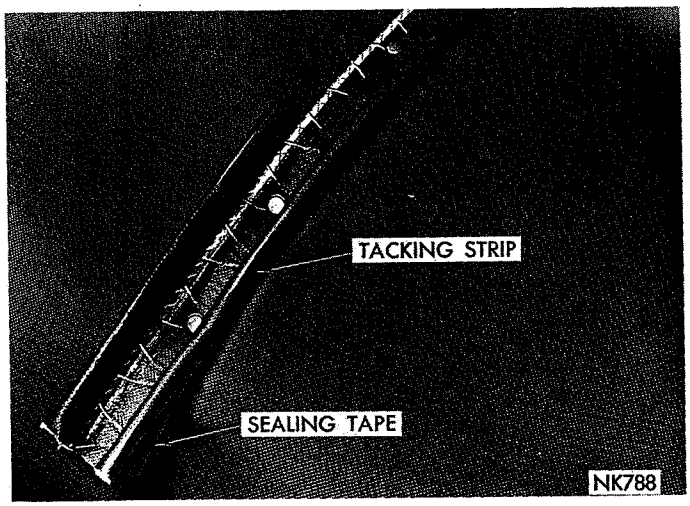


*Fig. 23—Installing Tacking Strip on Rear Bow*

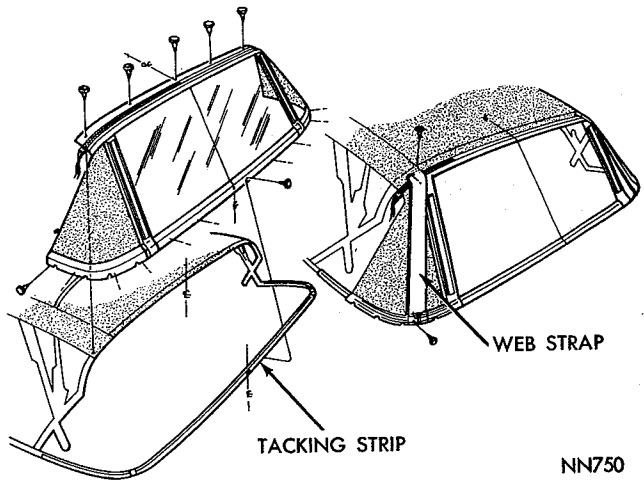


*Fig. 25—Rear Curtain Assembly*

MyMopar.com

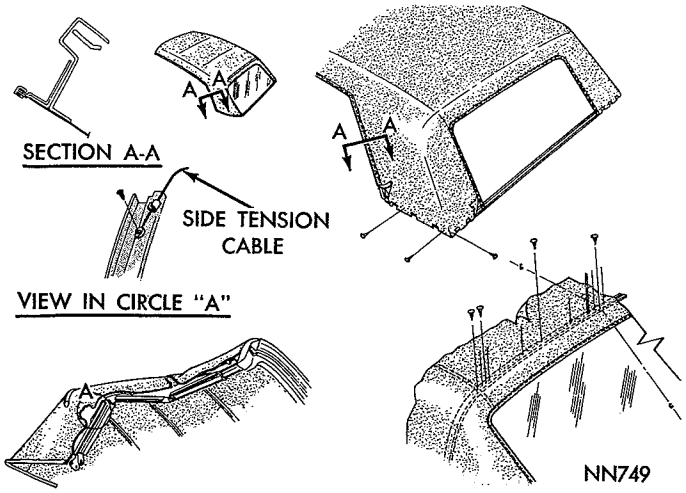


**Fig. 26—Cover Attachment at Rear**

noting fit of cover in relation to top of door glass and vent wings. Should either the vent wing or door glass contact the beading on edge of cover on one side, the material may be loosened at header and moved slightly toward opposite side until clearance is obtained. Should contact at both doors be made, it will be necessary to build up cover pads on both sides to eliminate interference.

(25) While keeping center line of cover and header in alignment, tack one half of cover to header. Space the tacks approximately one inch apart.

(26) Install drive nail at lower front edge of cover and one long tack through cover beading to header.

(27) At rear roof bow on same side, make certain center line marks of the cover and roof bow are in alignment and tack cover into position spacing tacks approximately ¼ inch apart.

(28) Install a large tack through cover beading at the rear bow.

(29) Repeat steps 27 and 28 for opposite side.

(30) Inspect alignment of cover and if satisfactory complete tacking operation at header. Tacks should

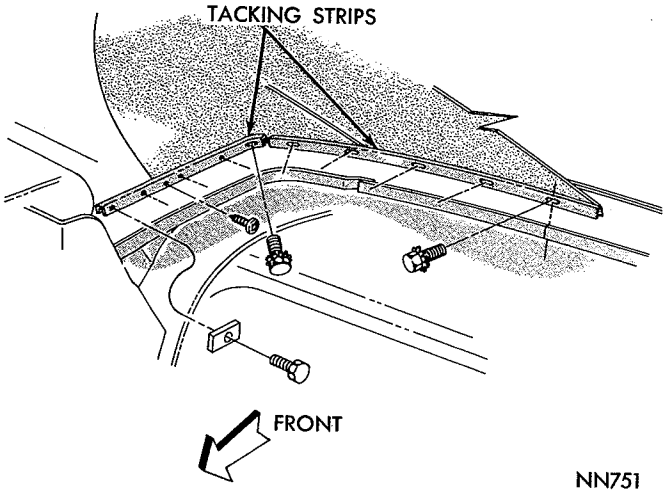


**Fig. 27—Belt Bar Tacking Strip**

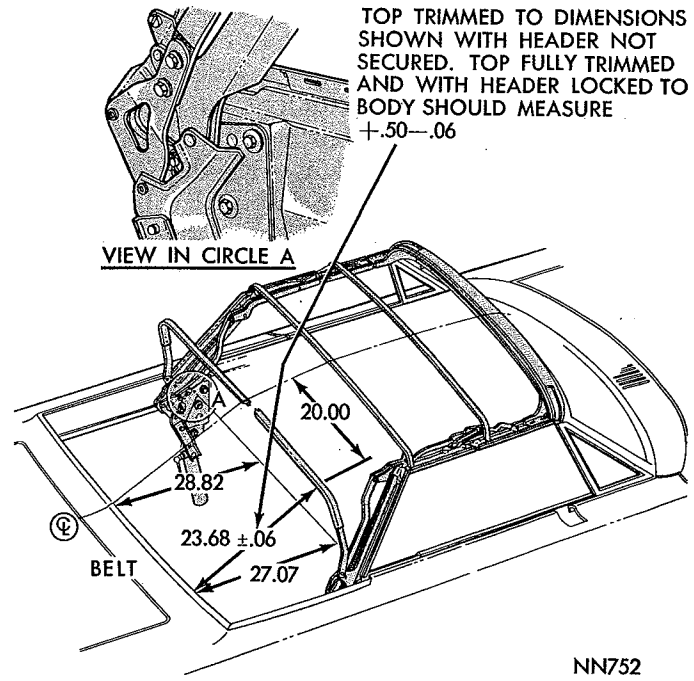


**Fig. 28—Trimmed Cover Dimensions**

be installed approximately ⅛ inch apart.

**Make sure all wrinkles are removed at the header during the tacking operation. Do not allow the cover material to lap over.**

(31) Position locking flaps (Fig. 18) between roof rail weatherstrip retainers and front rail. Install retaining screws and weatherstrips.

(32) Apply cement across cover tacking area, making sure each tack is completely covered. **Use care not to allow cement outside of the tacking strip area.**

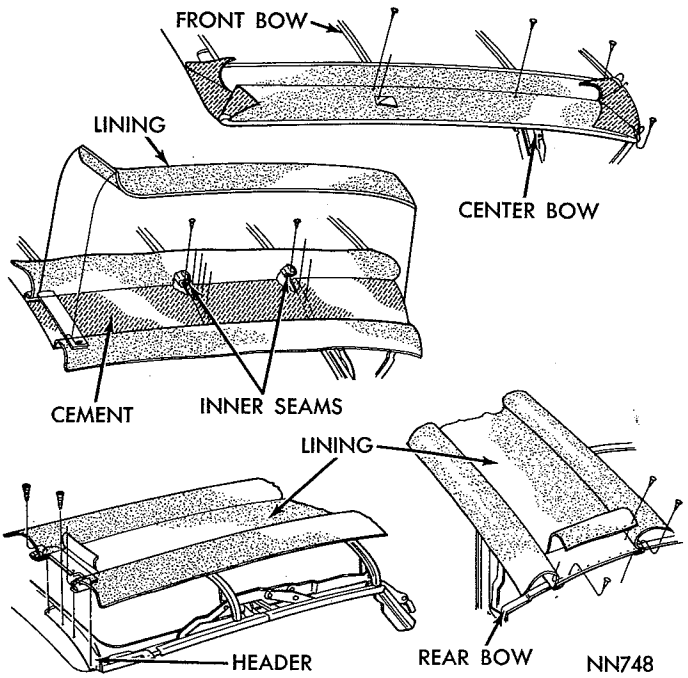


**Fig. 29—Stay Pad Attachment**

MyMopar.com

(33) Apply cement between outer edge of cover and header. Press cover firmly down on the header.

(34) When installing sealing tape across header tack a small piece of tape should first be pressed over drive nail on each end of header (Fig. 22). Use tape same color as cover. The tape should be slightly smaller in width than header moulding.

(35) Position heading moulding on header. Align moulding retainer clips with the screw holes in header and install screws.

(36) Apply cement to vent wing seals and press into place.

(37) Apply cement to header weatherstrip, where loosened and press firmly into place.

(38) Apply cement to tacking strip area on rear roof bow, making certain each tack is completely covered. Use care not to allow cement to extend outside of the tacking area.

(39) Using sealing tape the same color as cover and slightly narrower than width of tacking strip, apply across entire tacking area. Press firmly into place.

(40) Position a new bow tacking strip over sealing tape and tack into position spacing tacks approximately one half inch apart (Fig. 23).

(41) After tacking strip has been completely installed, fold the forward edge of tacking strip to the rear to cover tacks (Fig. 24).

(42) Install retainers and screws on ends of tacking strip.

(43) Position mouldings at quarter panel and rear window. Install the snap retainer and screw assemblies. **Do not over-tighten.**

(44) Test operation of top assembly and inspect fit of top at windshield header, door and quarter window areas. Adjust linkage, doors or quarter window as necessary.

(45) Remove masking tape and protective covers.

### *Belvedere—Satellite*

The application of the top cover material at the header and the rear curtain (Fig. 25) at number 3 bow is essentially the same as for Fury and Valiant. The material and rear curtain at the quarter panel belt bar (Fig. 26) area is attached to tacking strips (Fig. 27) which are attached to the quarter panel and deck panel with screw and washer assemblies. Use the old cover material as a pattern when making the new cover. The cover dimensions for the rear area (Fig. 28) should be used.

The stay pad reinforcements (Fig.29) are attached to the header with screws and with tacks at the roof bows.

## SEALING

## INDEX


| | Page |
|---|---|
| METHODS OF APPLYING SEALERS | |
| SEALER APPLICATION | |
| BELVEDERE—SATELLITE | |
| Cowl | 141 |
| Drain Trough Area | 139 |
| Floor Pan—Center | 141 |
| Front | 141 |
| Plugs—Rubber | 137 |
| Rear | 135 |
| Side Sills and Floor | 141 |
| Pillars | 137 |
| Quarter Panel—Convertible Inside | 138 |
| Inside—Station Wagon | 137 |
| Spare Tire Compartment | 132 |
| Inside and Fence—Convertible | 138 |
| Roof Extension | 140 |
| Spare Tire Compartment | 132 |
| Roof Extension and Quarter Panel | 140 |
| Tail Gate Opening | 138 |
| Vent Wing Area | 128 |
| Windshield Area | 133 |
| FURY | |
| Cowl | 139 |
| Dash | 139 |
| Deck Opening | 142 |
| Drain Trough | 135 |
| Tail Light Area | 128 |
| Floor Pan—Center | 139 |
| Lower Panel | 128 |
| Plugs—Rubber | 133 |
| Rear | 128 |
| Side Sills | 139 |
| Pillars | 142 |
| Front | 128 |
| Lock and Drain Trough | 130 |
| Seals and Sealers | 140 |
| Tail Gate | 142 |
| Quarter Panels—Inside | 127 |
| Belt Bar—Convertible | 142 |
| Wheelhouse—Inner Panel | 142 |
| Outer Opening | 128 |
| Spare Tire Compartment | 131 |
| Tail Gate Opening | 142 |
| Roof Rail—Rear | 128 |
| Stone Deflector | 141 |
| Tail Gate Opening | 142 |
| Pillars | 142 |
| Tail Light Opening | 142 |
| VALIANT | |
| Drain Trough Area | 139 |
| Floor Pans | 134 |
| Side Sills | 134 |
| Pillars | 131 |
| Upper | 136 |
| Quarter Panels | 136 |
| Inside | 136 |
| Convertible | 138 |
| Roof Extension | 140 |
| Wheelhouse and Belt Bar | 141 |
| Roof Extension and Quarter Panel | 140 |
| Tail Gate Opening | 138 |
| Vent Wing Area | 128 |
| Windshield Area | 133 |
| SEALERS AND COMPOUNDS | 127 |
| TESTING | 127 |


MyMopar.com

## GENERAL INFORMATION

The procedures for weatherstrip sealing and replacement are incorporated with the procedures of the component unit.

The sealing illustrations used in this section show the area sealed during manufacture of the vehicle. These areas should be considered when testing for leaks.

# SERVICE PROCEDURES

## TESTING

### *Water Method*

Normally a visual inspection of an area will indicate the area for sealing. When testing with water, use a spray simulating rain or a garden hose without the nozzle and regulate the pressure to an approximate 3 inch stream. All water tests must be made starting at the bottom of the door opening or weatherstrip and slowly moving up the joint, seam or suspected area.

### *Powder Method*

To test the sealing between the body and the weatherstrips, it is advisable to use trace powder and a test bulb. When the powder is sprayed at the point where a leak is suspected it will leave a trace line through the point of leakage.

In hard to reach points, such as the dog leg at the "A" post, blue carpenter's chalk applied to the weatherstrip will transfer to the "A" post when the door is closed if a good contact exists.

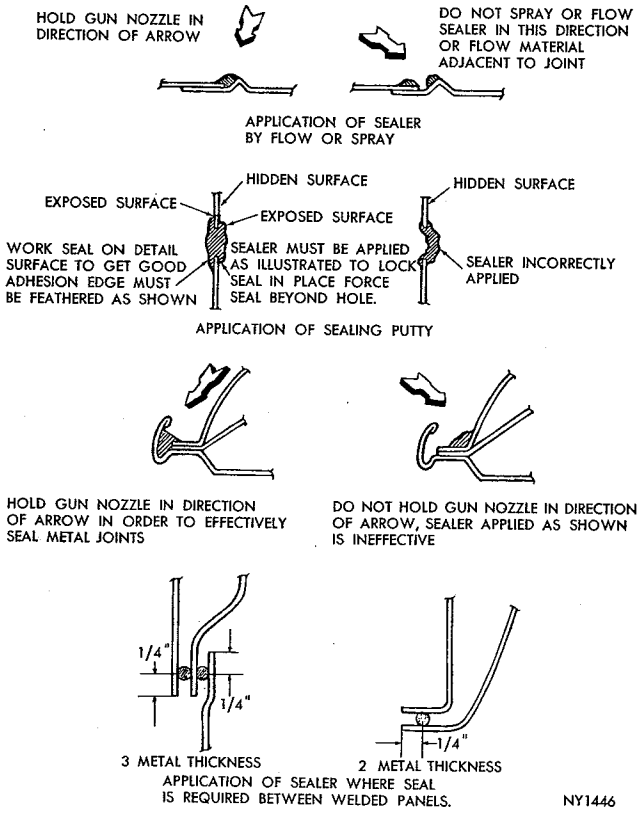


*Fig. 1—Methods of Applying Sealers*

## SEALERS AND COMPOUNDS

**Super Rubber Cement**—May be used where a strong bonding of rubber parts to painted or unpainted steel surfaces is desired, attachment of weatherstrip on doors and luggage compartment lid or for attachment of felt pads.

**Windshield Rubber Sealer**—A heavy viscosity, rubber expander. Sealer can be used where rubber is confined between a glass and metal channel, such as on the windshield and rear window glass assembled in one-piece type weatherstrips. Sealer will not harm paint or chrome finish and can easily be removed with a cloth before it sets.

**Body Seam Sealers**—For External Sealing along welded joints, exterior roof rails, exterior belt lines, B-post welds, weatherstrips and floor seams. Upon drying, the sealer forms a tough skin which can be painted with a touch-up brush.

**Heavy Sealing Putty (For Interior Sealing)**—A heavy, fibrous, putty-like compound, which can be formed or rolled into pellets or long string shapes.

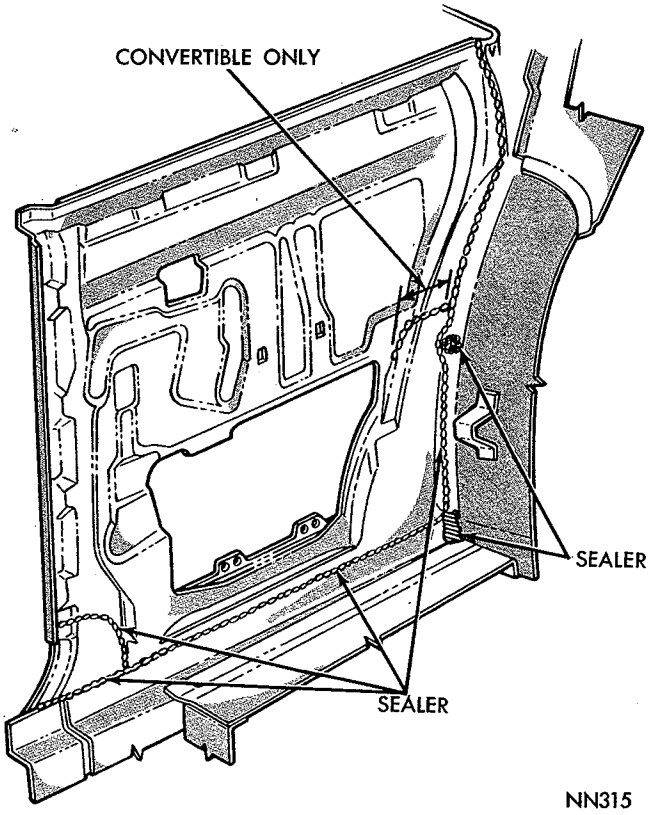


*Fig. 2—Inside Quarter Panels (Fury)*

MyMopar.com

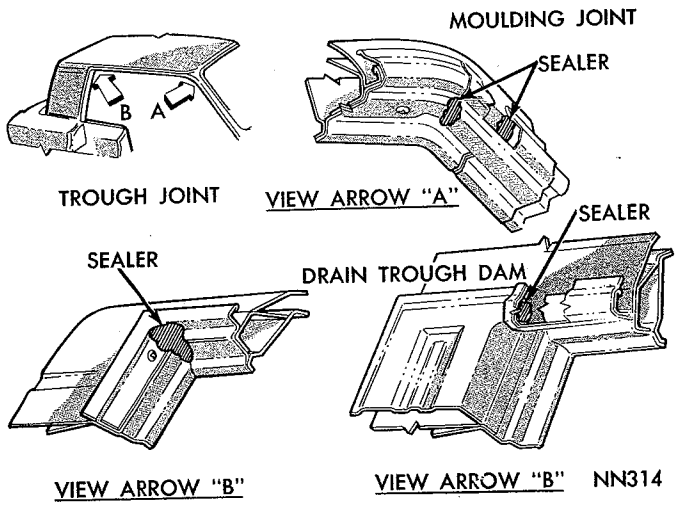


**Fig. 3—Rear Roof Rail Areas (Fury)**

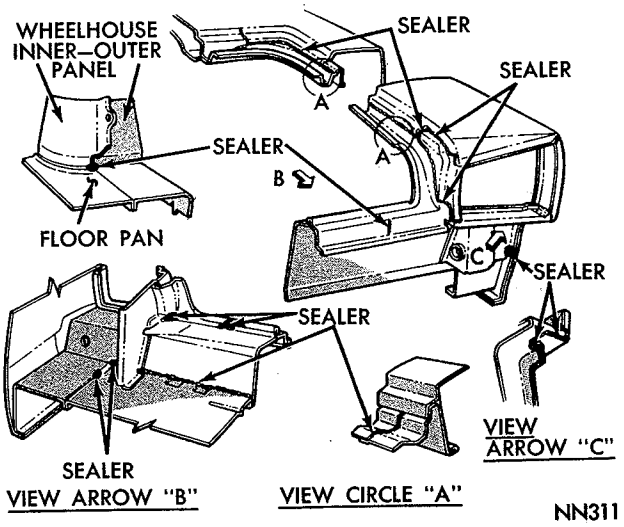


**Fig. 6—Tail Light and Deck Drain Trough (Fury)**

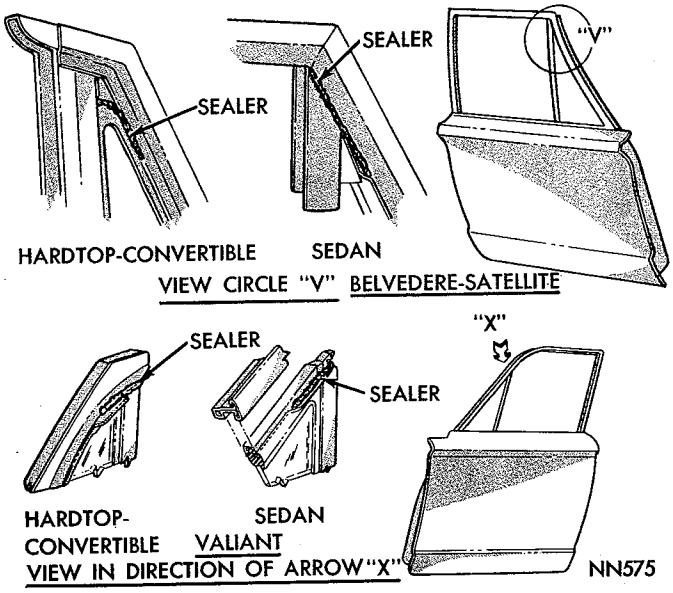


**Fig. 4—Vent Wing (Belvedere—Satellite—Valiant)**

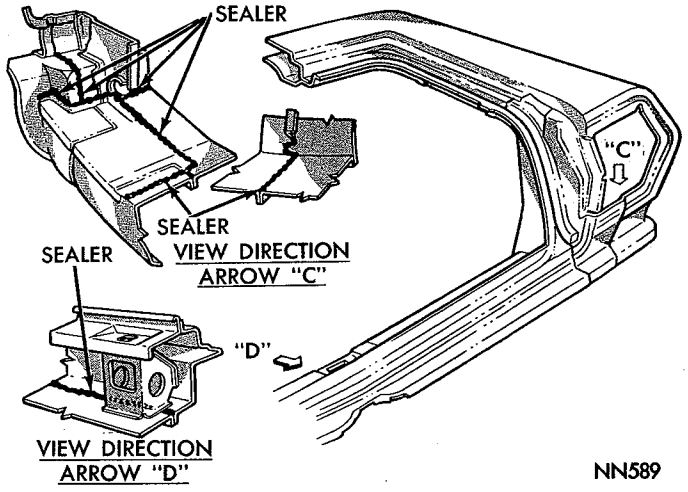


**Fig. 7—Rear Floor Pan and Lower Panel (Fury)**

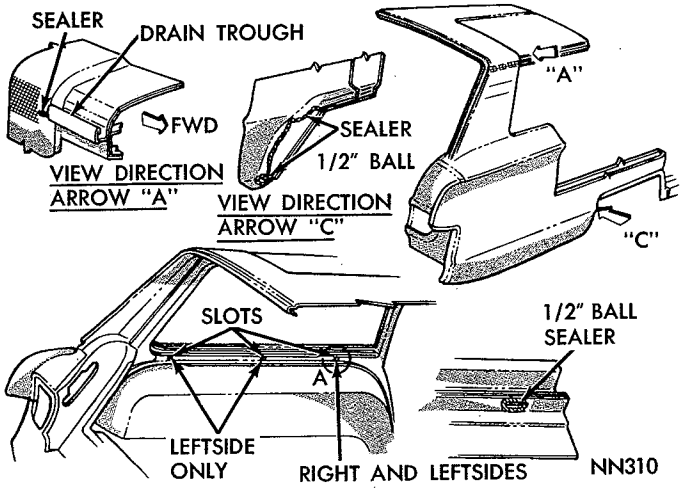


**Fig. 5—Wheelhouse Outer Opening and Inner Panels (Fury)**

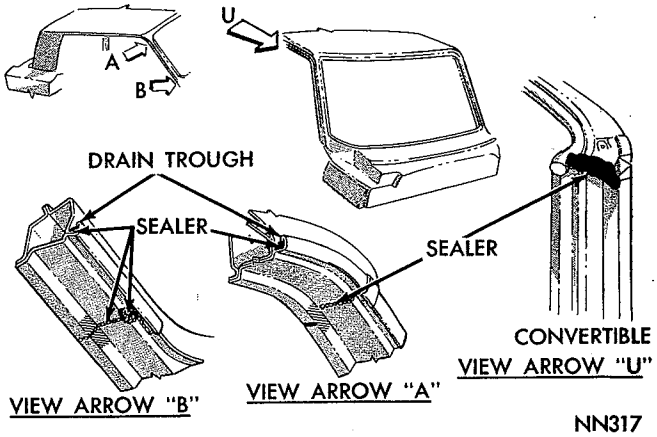


**Fig. 8—Front Pillar Area (Fury)**

MyMopar.com

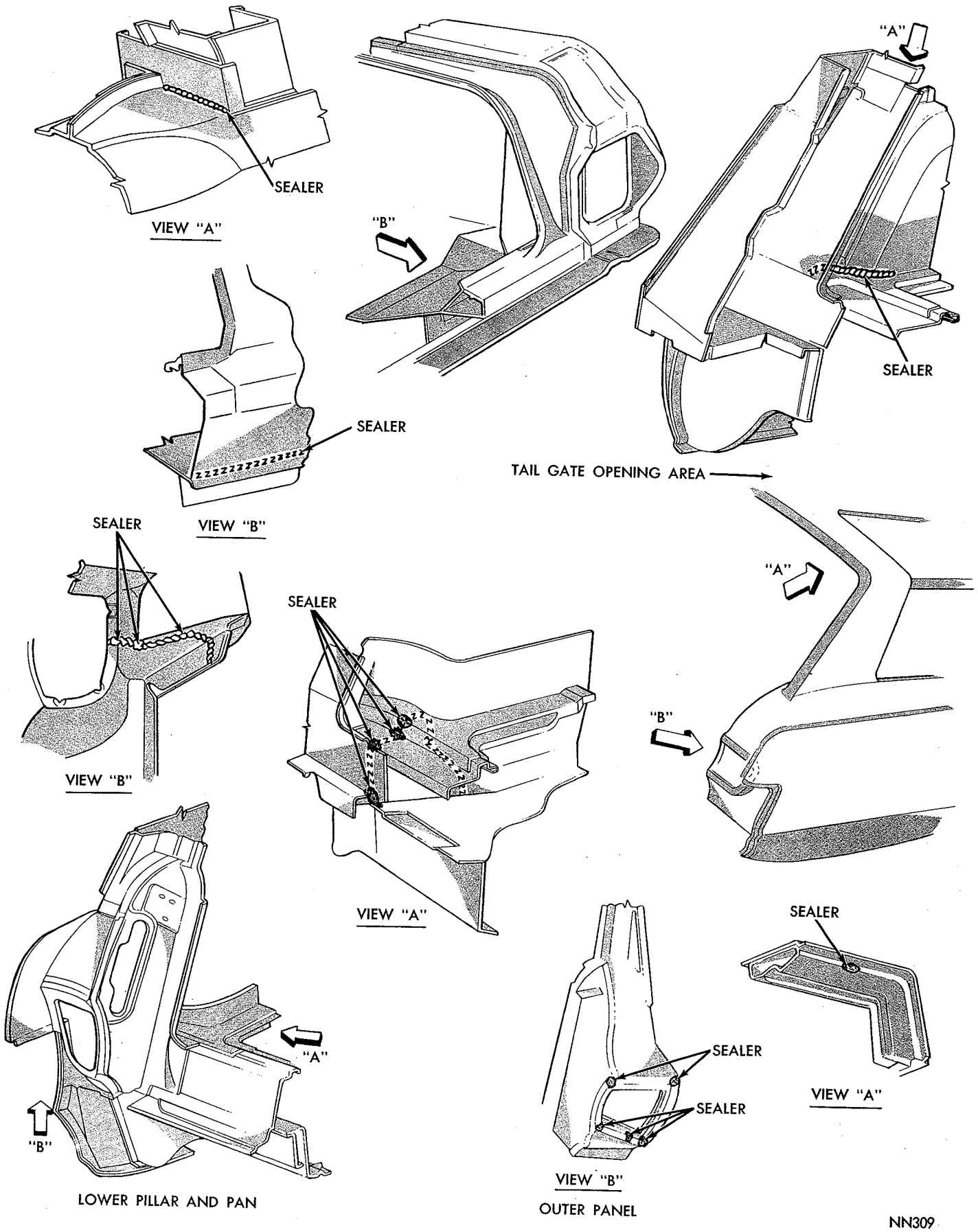


NN309

***Fig. 9—Wheelhouse and Tail Gate Opening (Fury)***

MyMopar.com

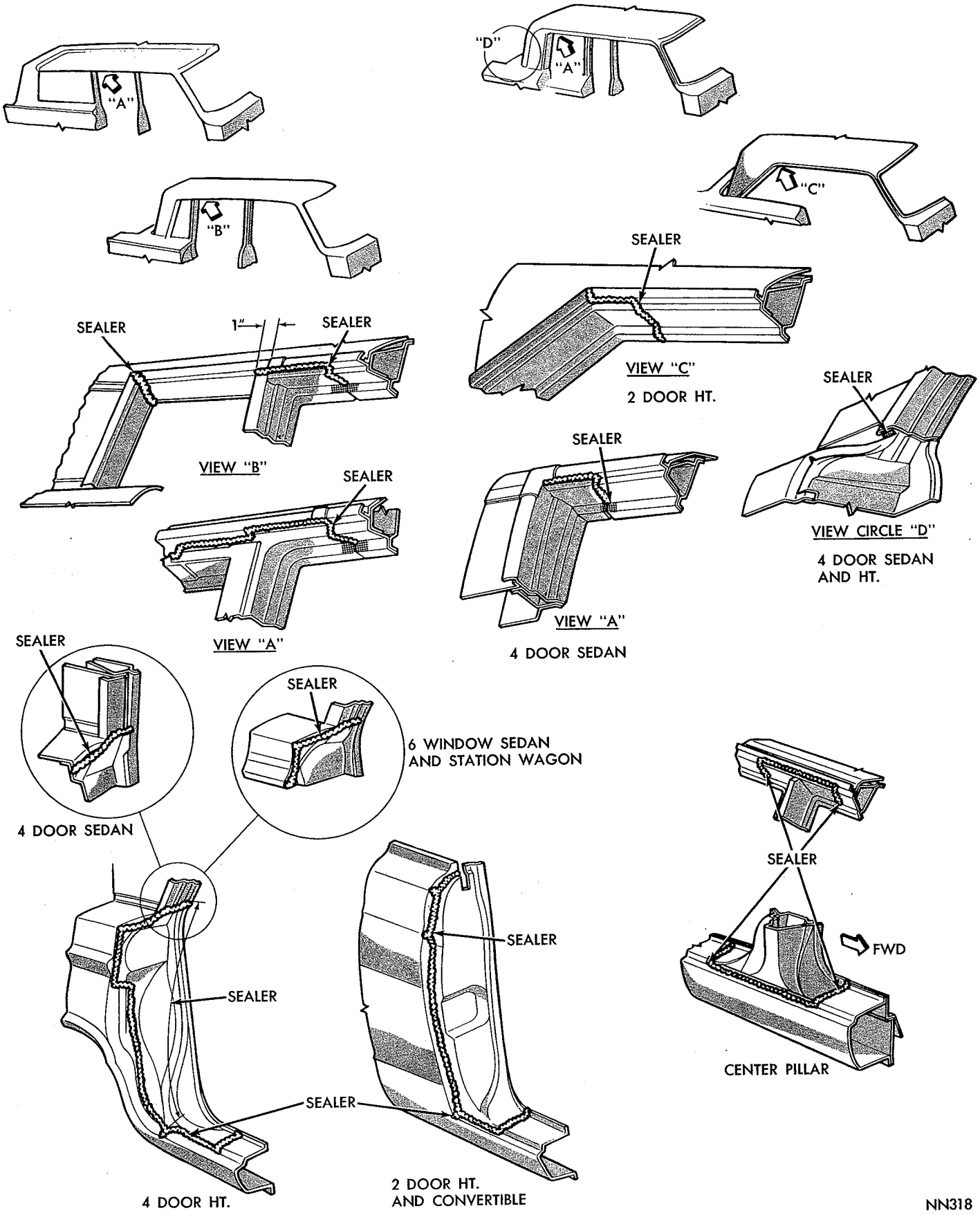


*Fig. 10—Lock Pillars and Drain Trough (Fury)*

MyMopar.com

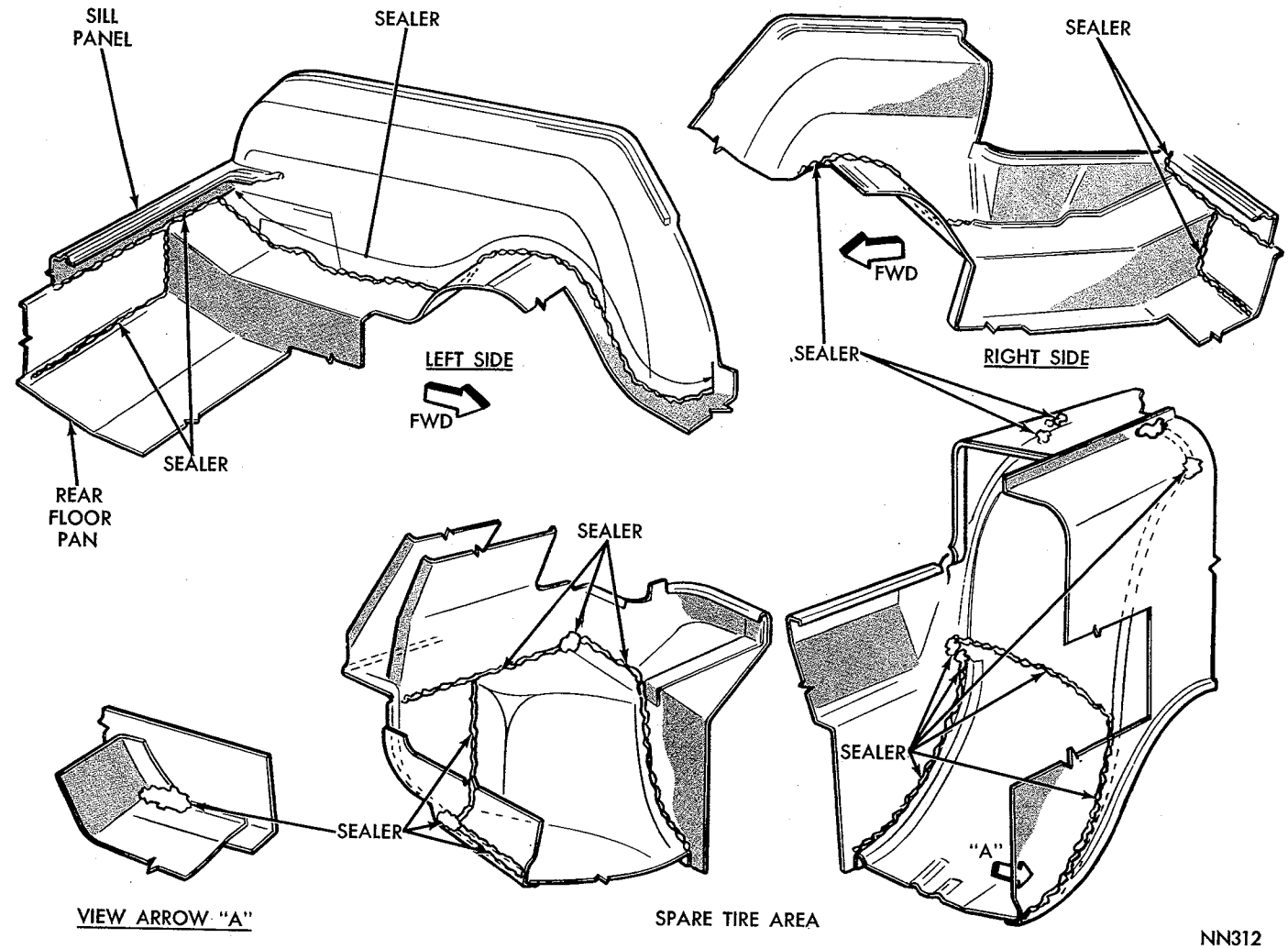


***Fig. 11—Wheelhouse and Spare Tire Compartment (Fury)***

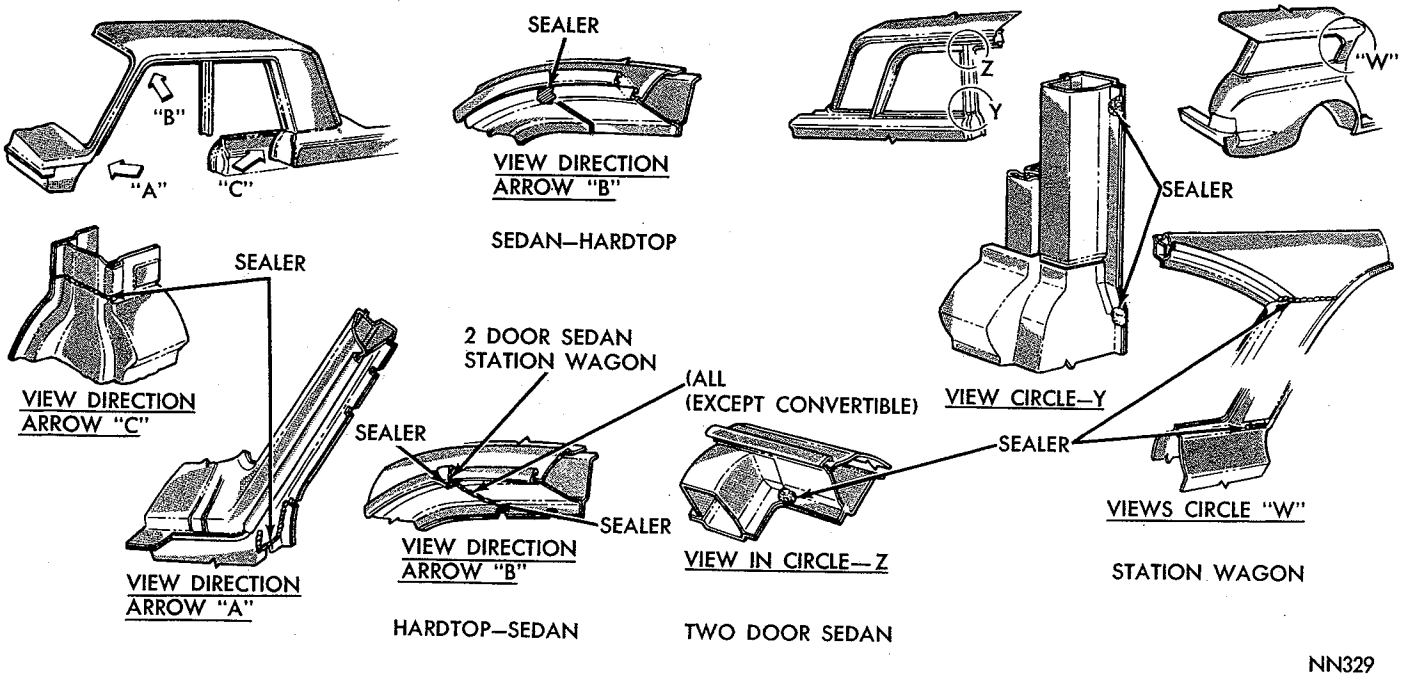


***Fig. 12—Pillars (Valiant)***

MyMopar.com

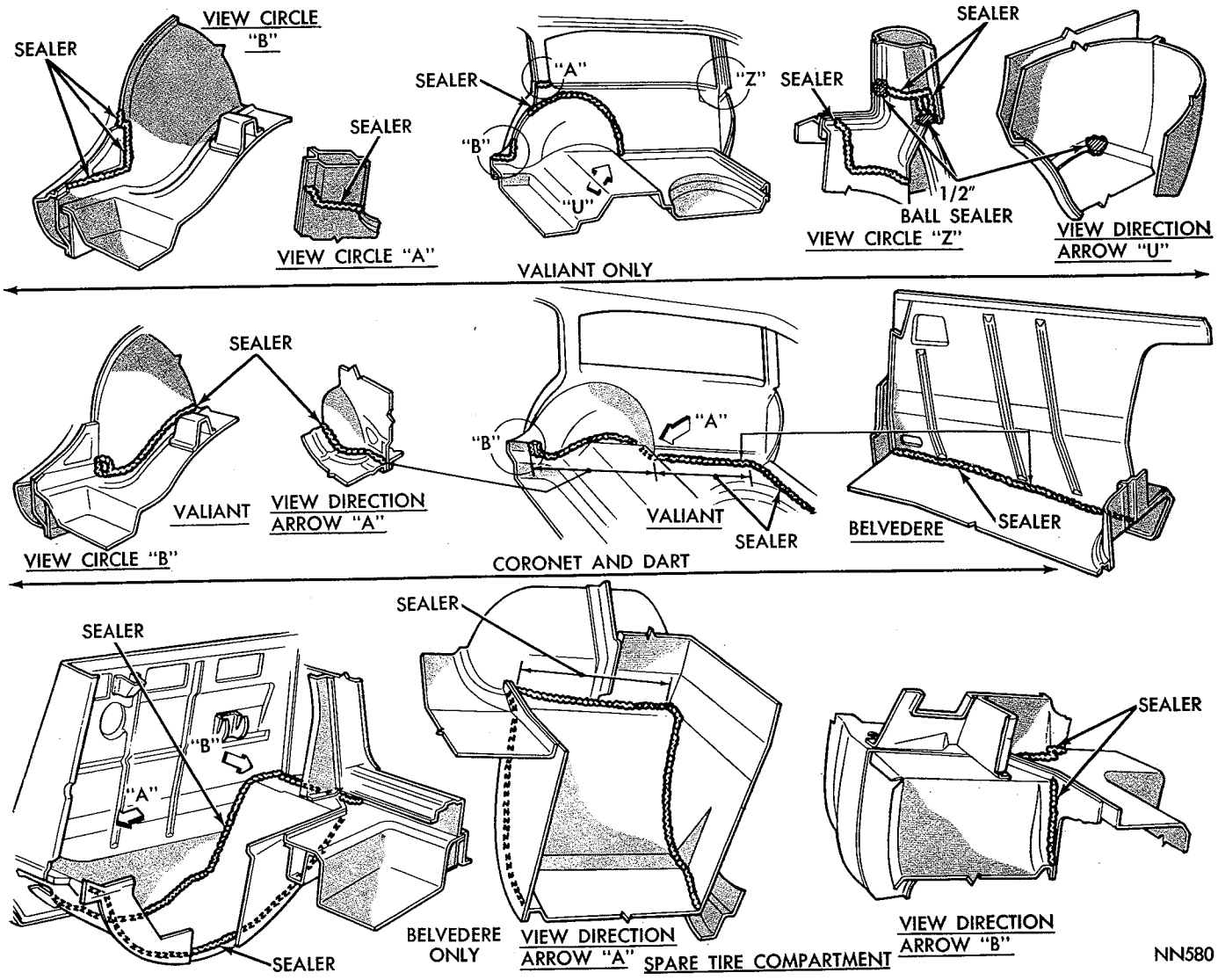


***Fig. 13—Inside Quarter Panel and Spare Tire Area (Belvedere—Satellite)***

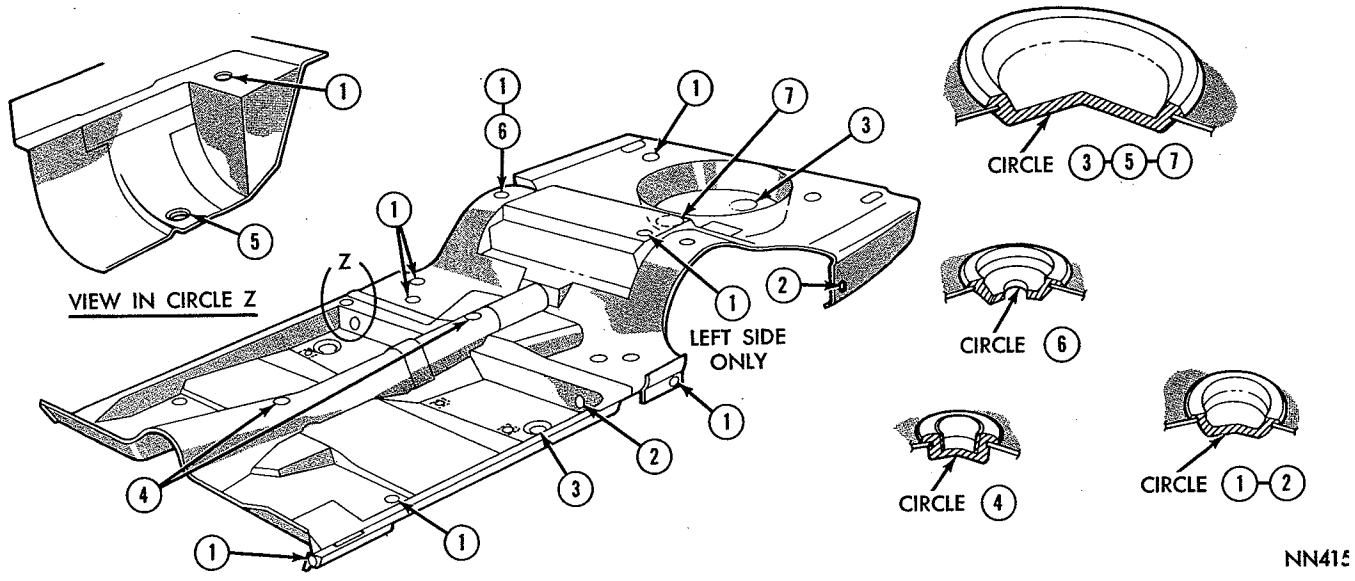


***Fig. 14—Floor Pan Plugs (Valiant)***

MyMopar.com

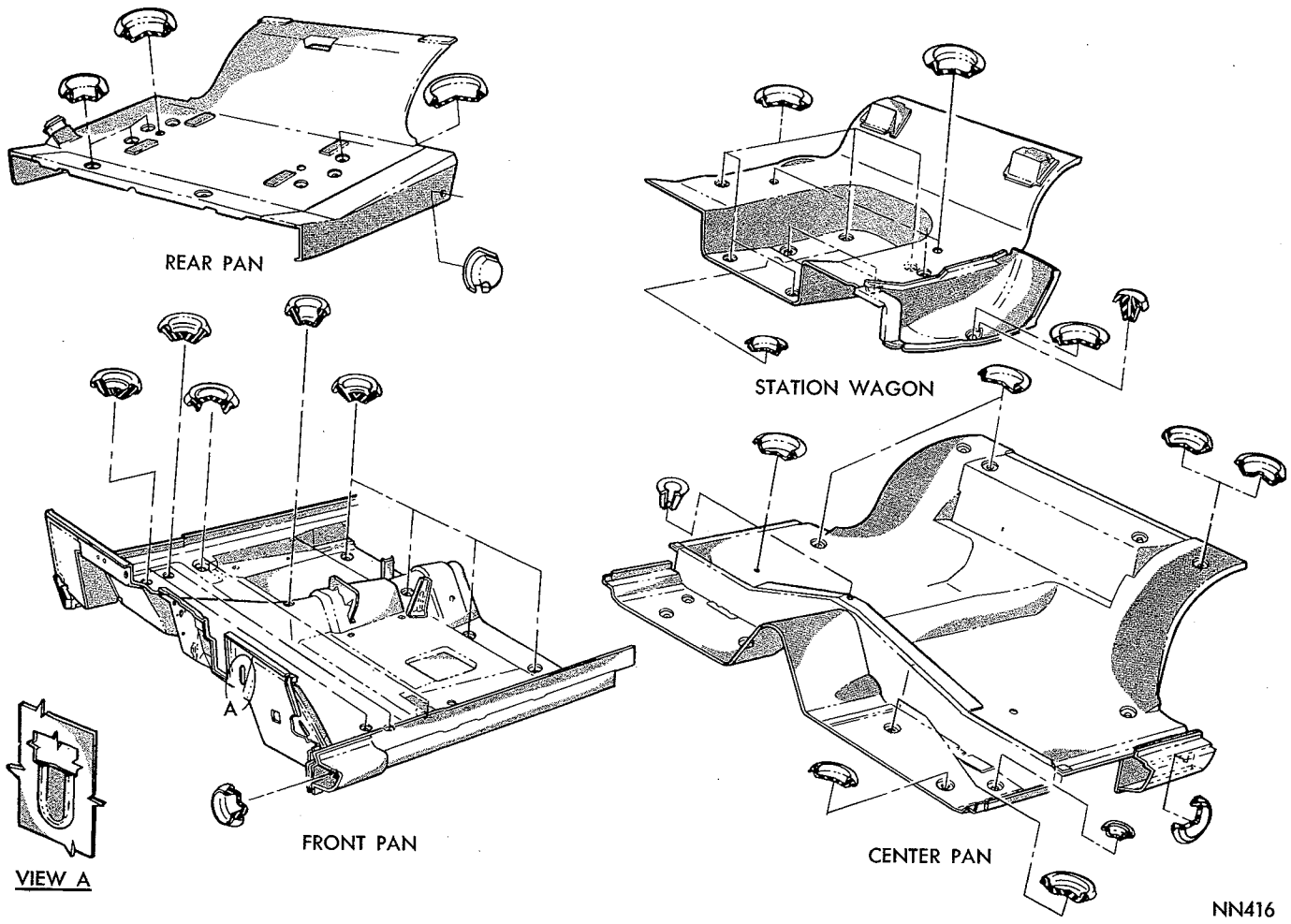


*Fig. 15—Floor Pan Plugs (Fury)*

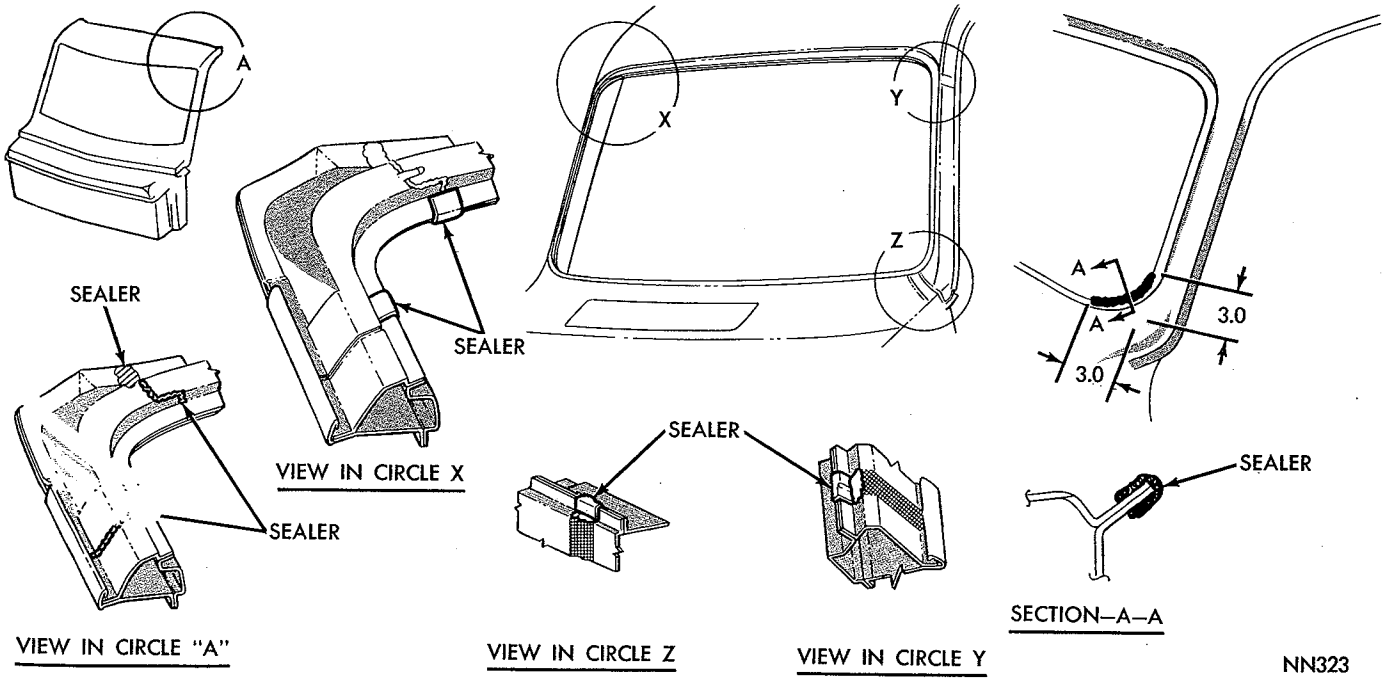


*Fig. 16—Windshield Area*

MyMopar.com

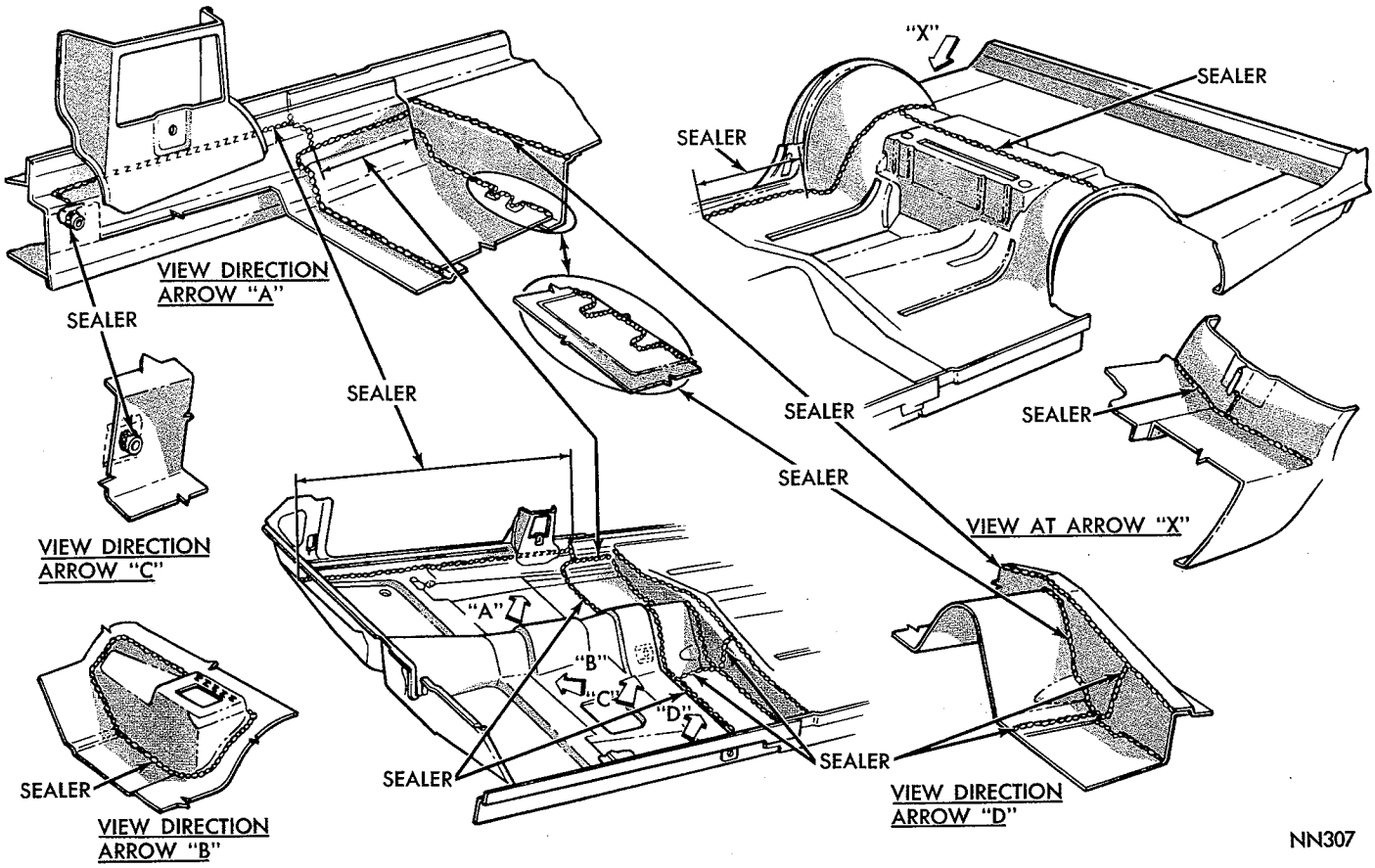


*Fig. 17—Floor Pan and Side Sill Area (Fury)*

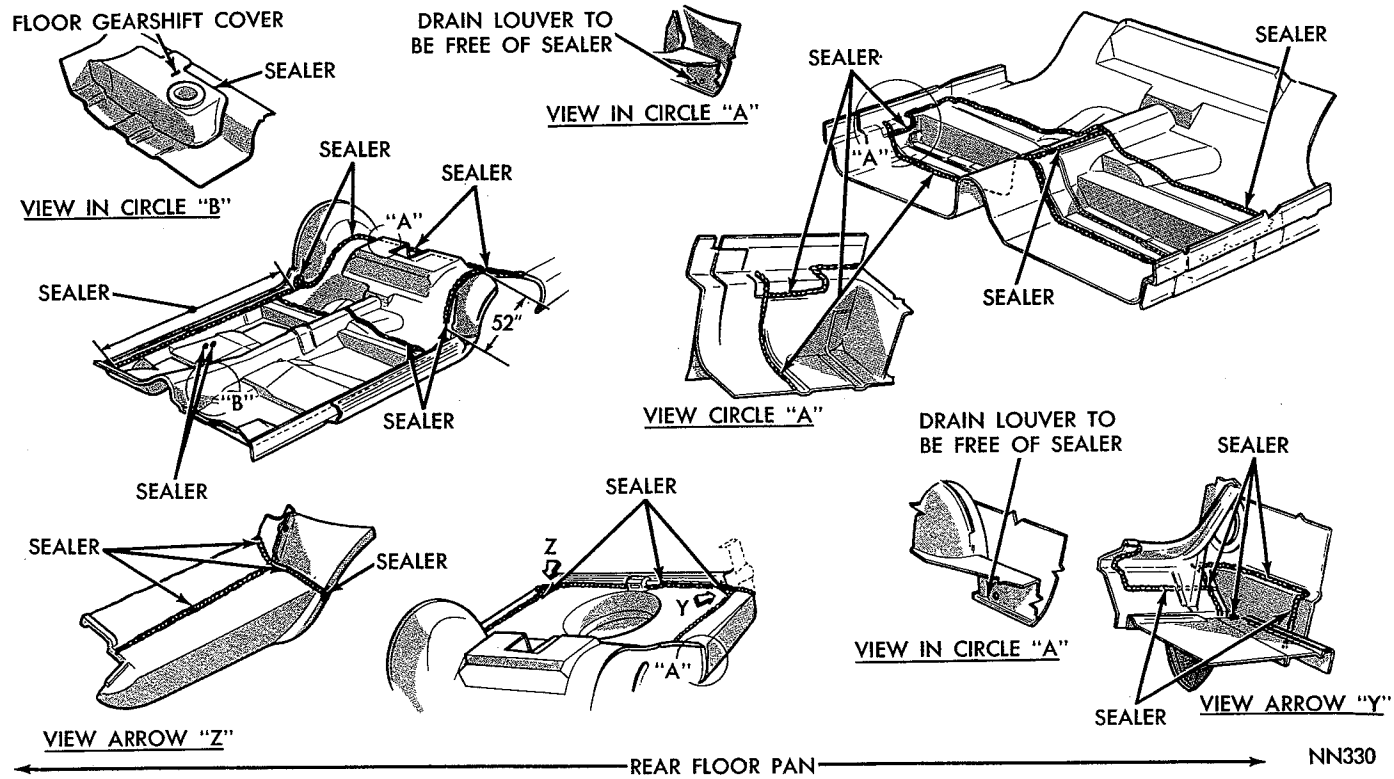


*Fig. 18—Floor Pan and Side Sills (Valiant)*

MyMopar.com

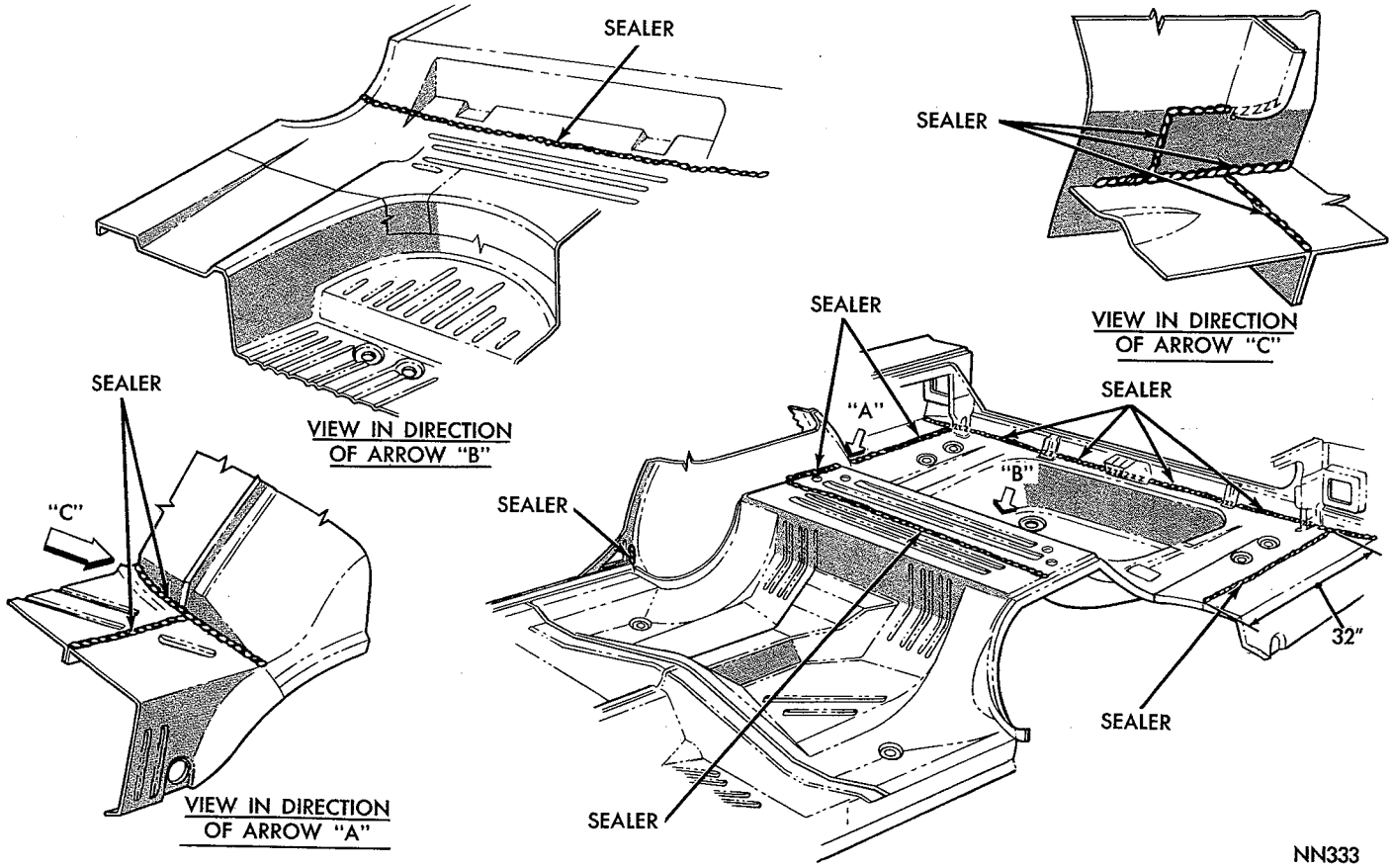


***Fig. 19—Rear Floor Pans (Belvedere—Satellite)***

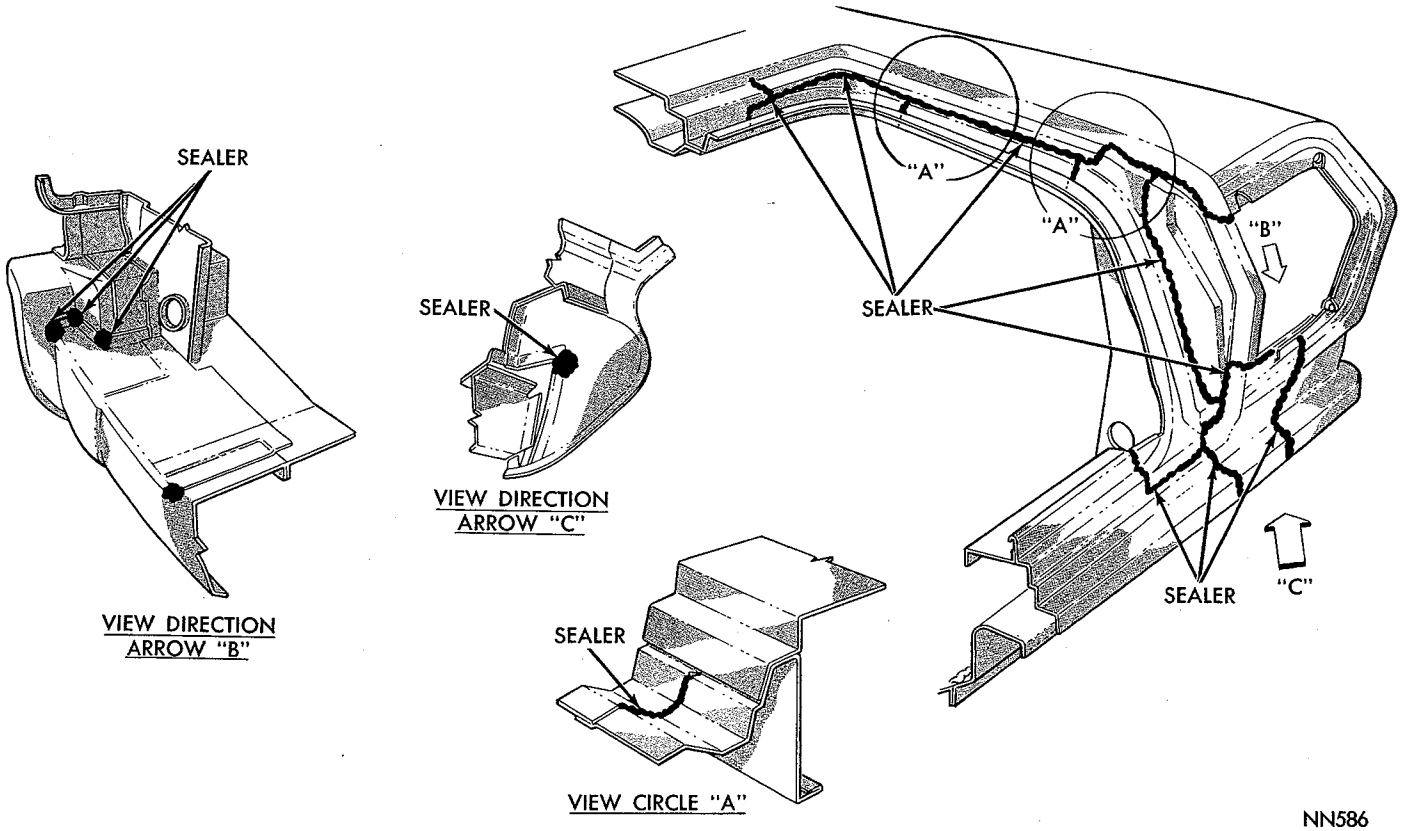


***Fig. 20—Deck Lid Drain Trough (Fury)***

MyMopar.com

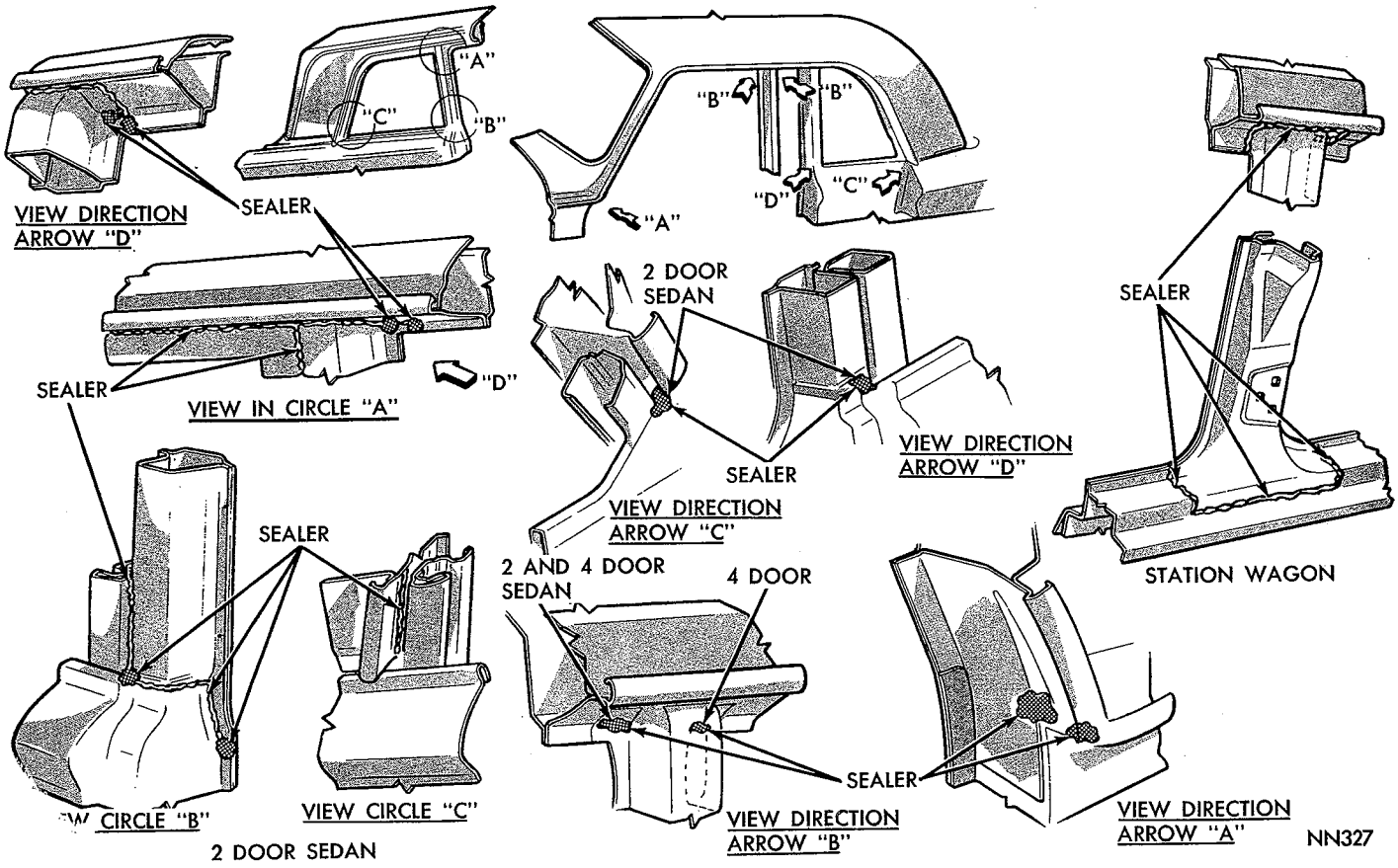


***Fig. 21—Upper Pillars (Valiant)***

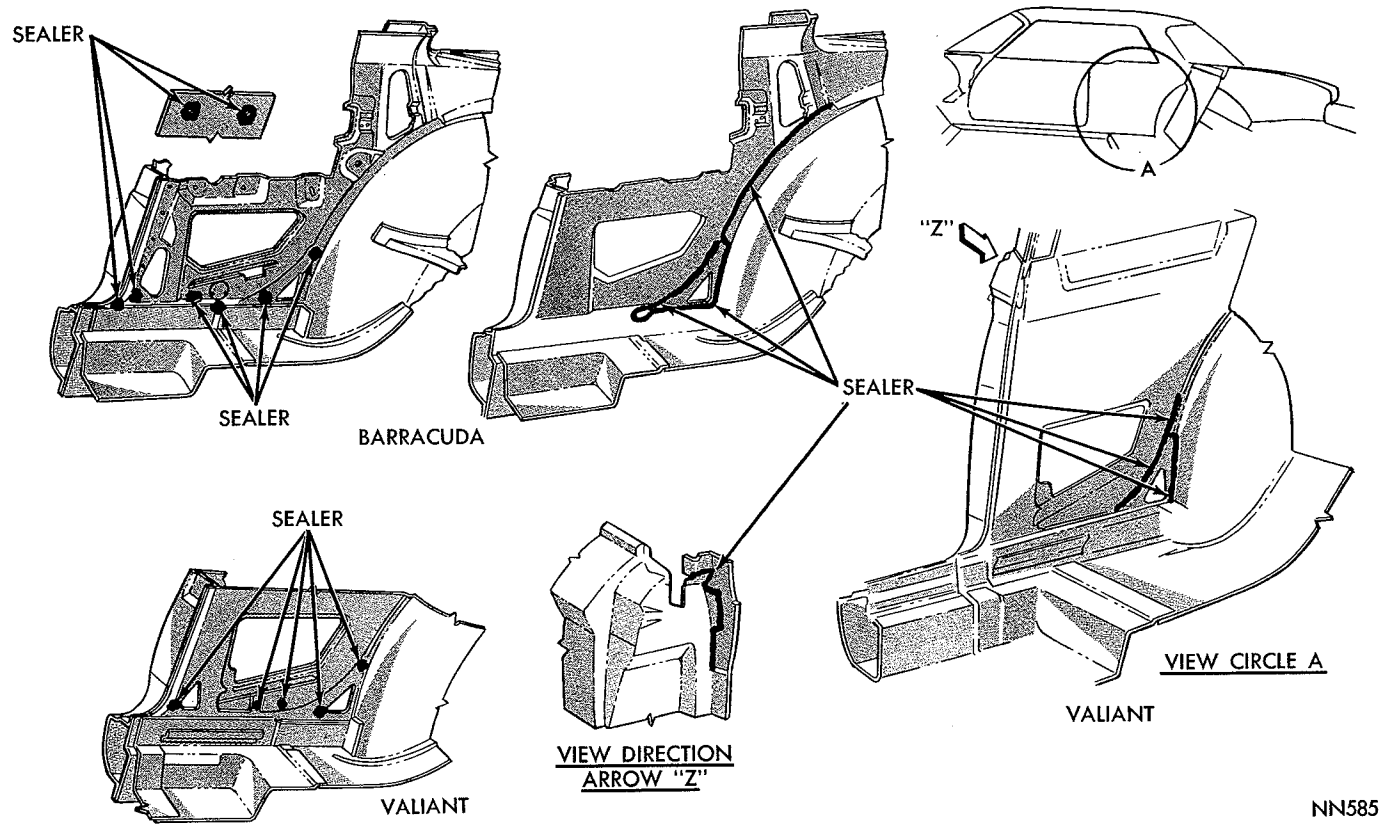


***Fig. 22—Inside Quarter Panels (Valiant—Barracuda)***

MyMopar.com

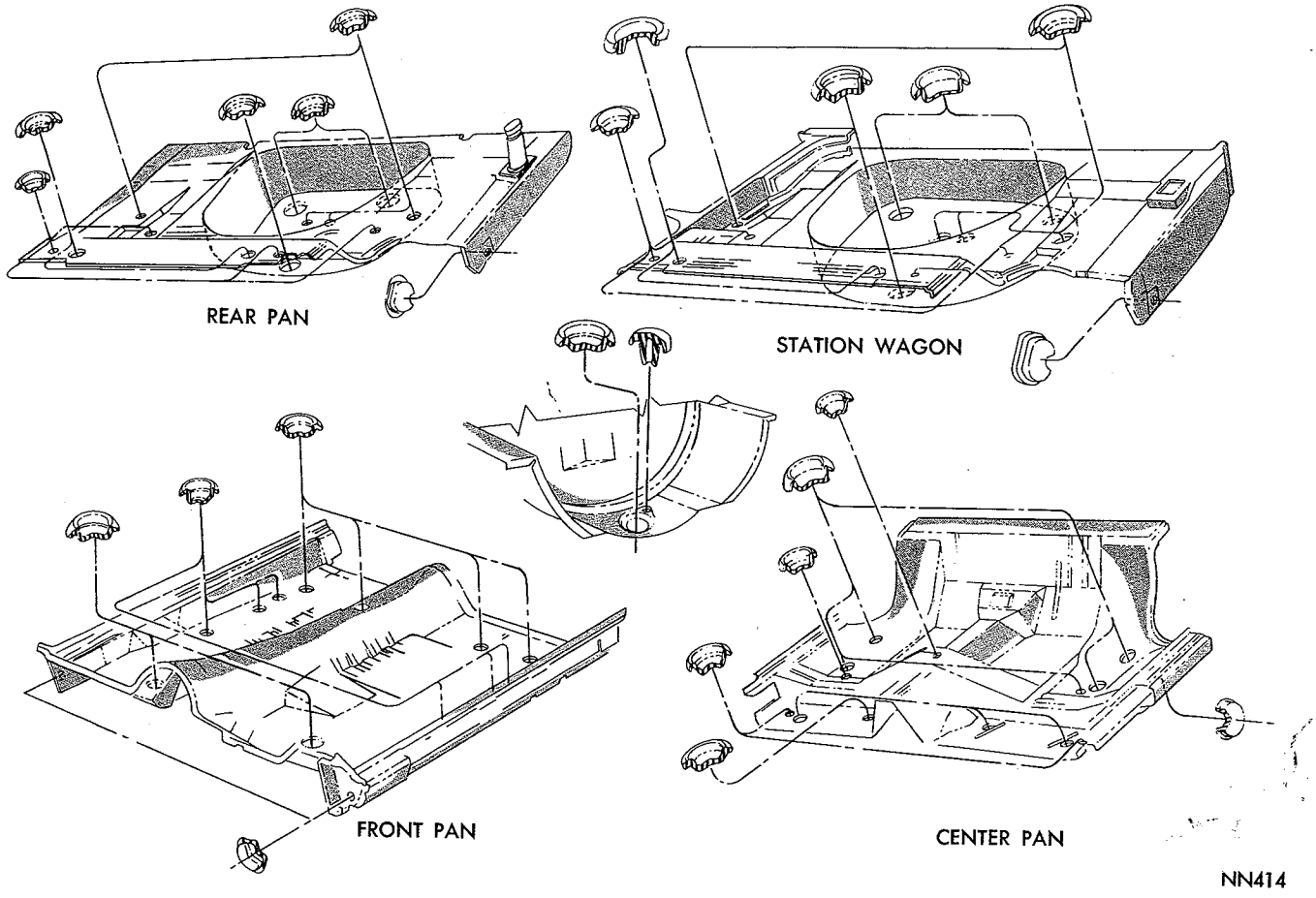


***Fig. 23—Floor Pan Plugs (Belvedere—Satellite)***

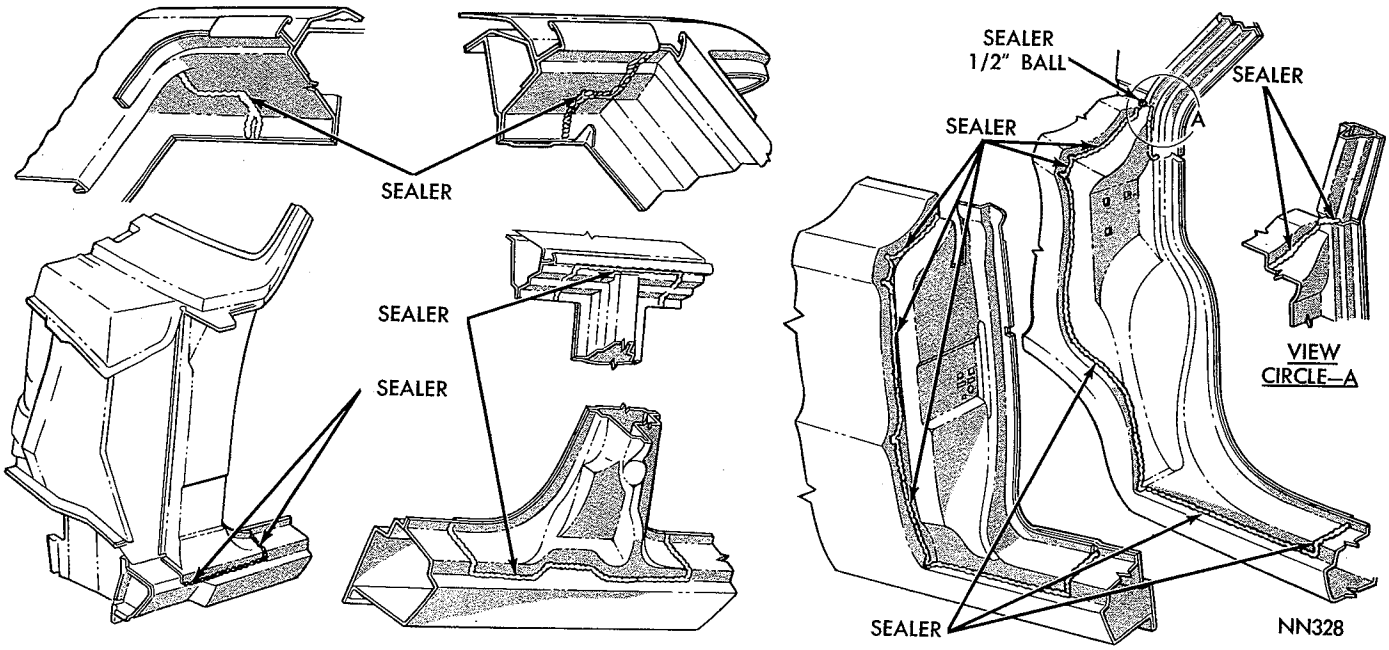


***Fig. 24—Pillars (Belvedere—Satellite)***

MyMopar.com

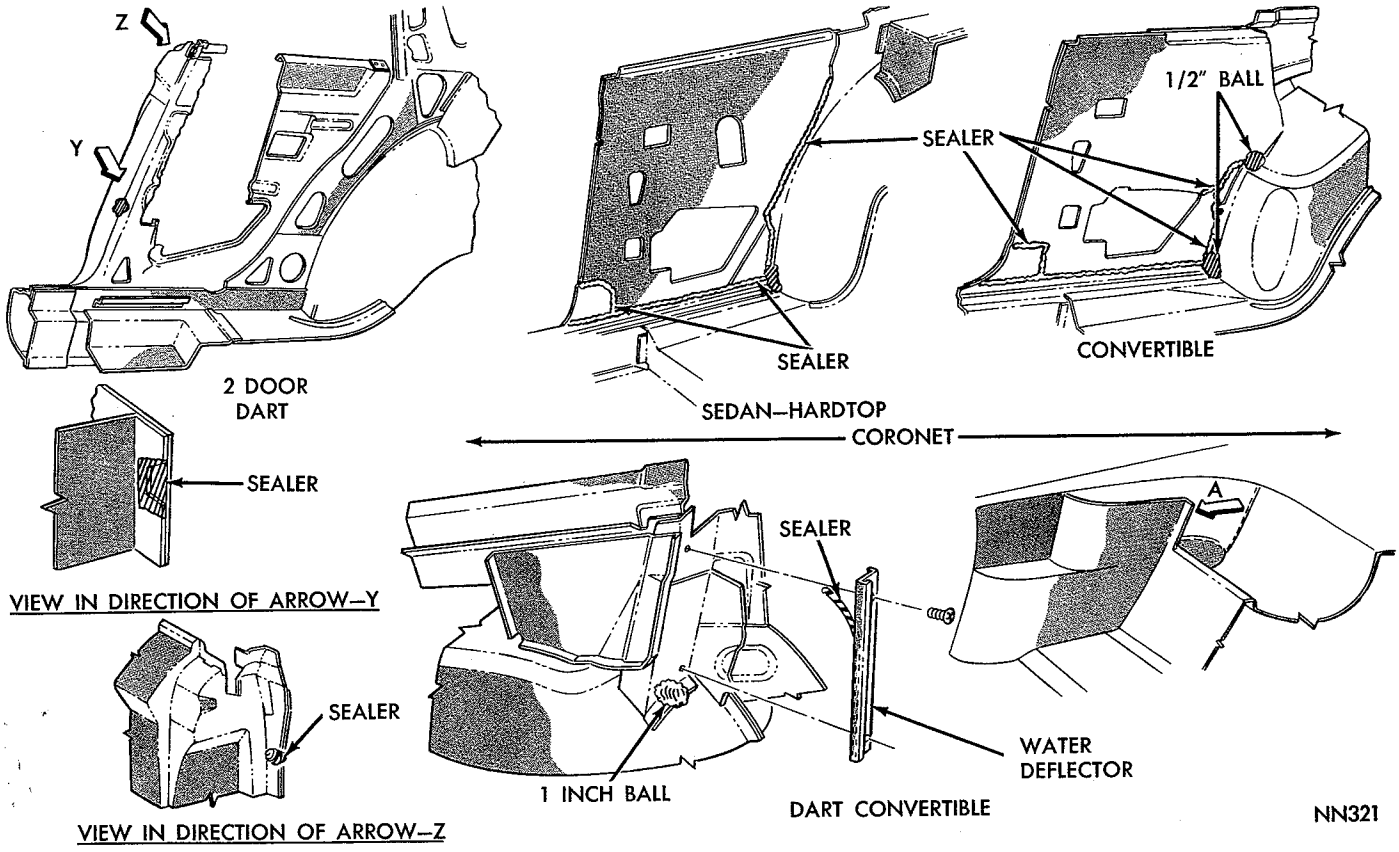


***Fig. 25–Quarter Inside Panel and Fence Area (Convertible)***

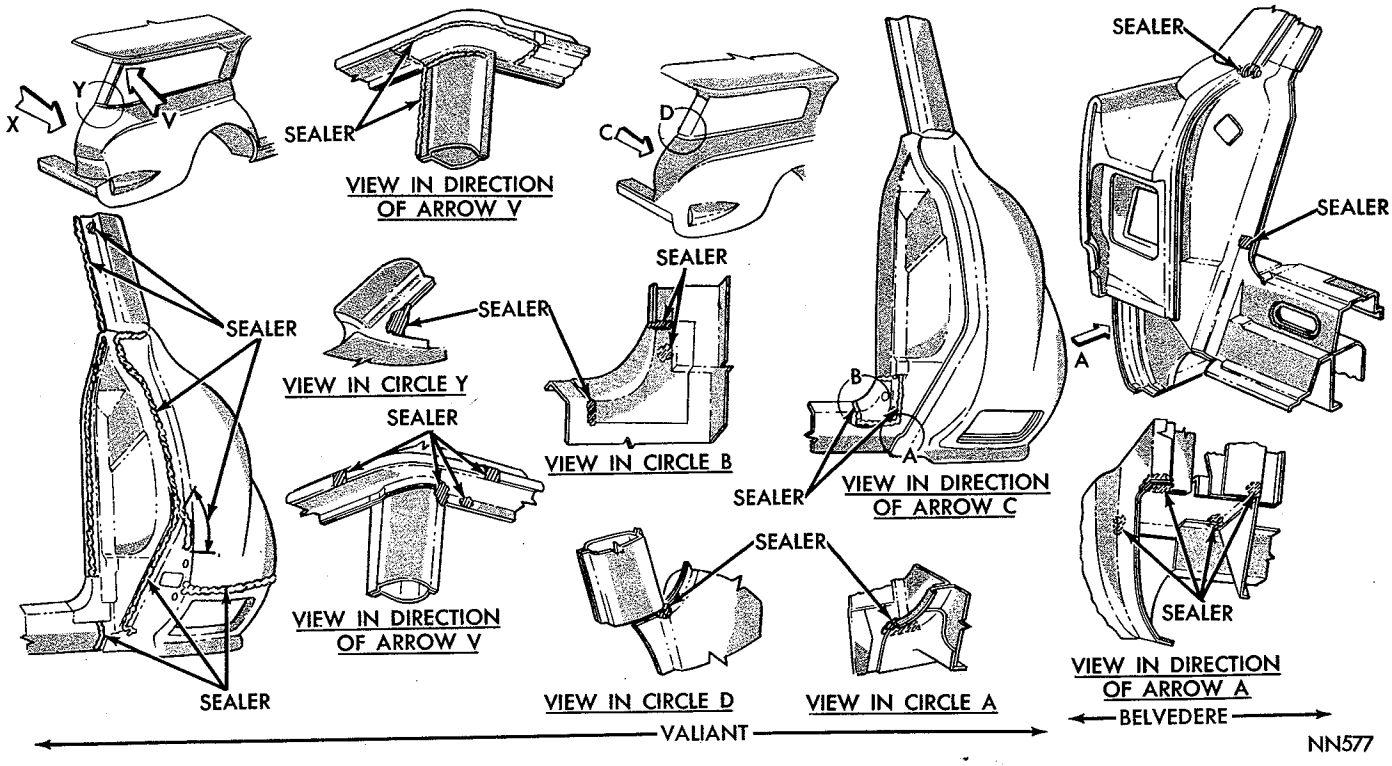


***Fig. 26–Tail Gate Opening (Belvedere–Valiant)***

MyMopar.com

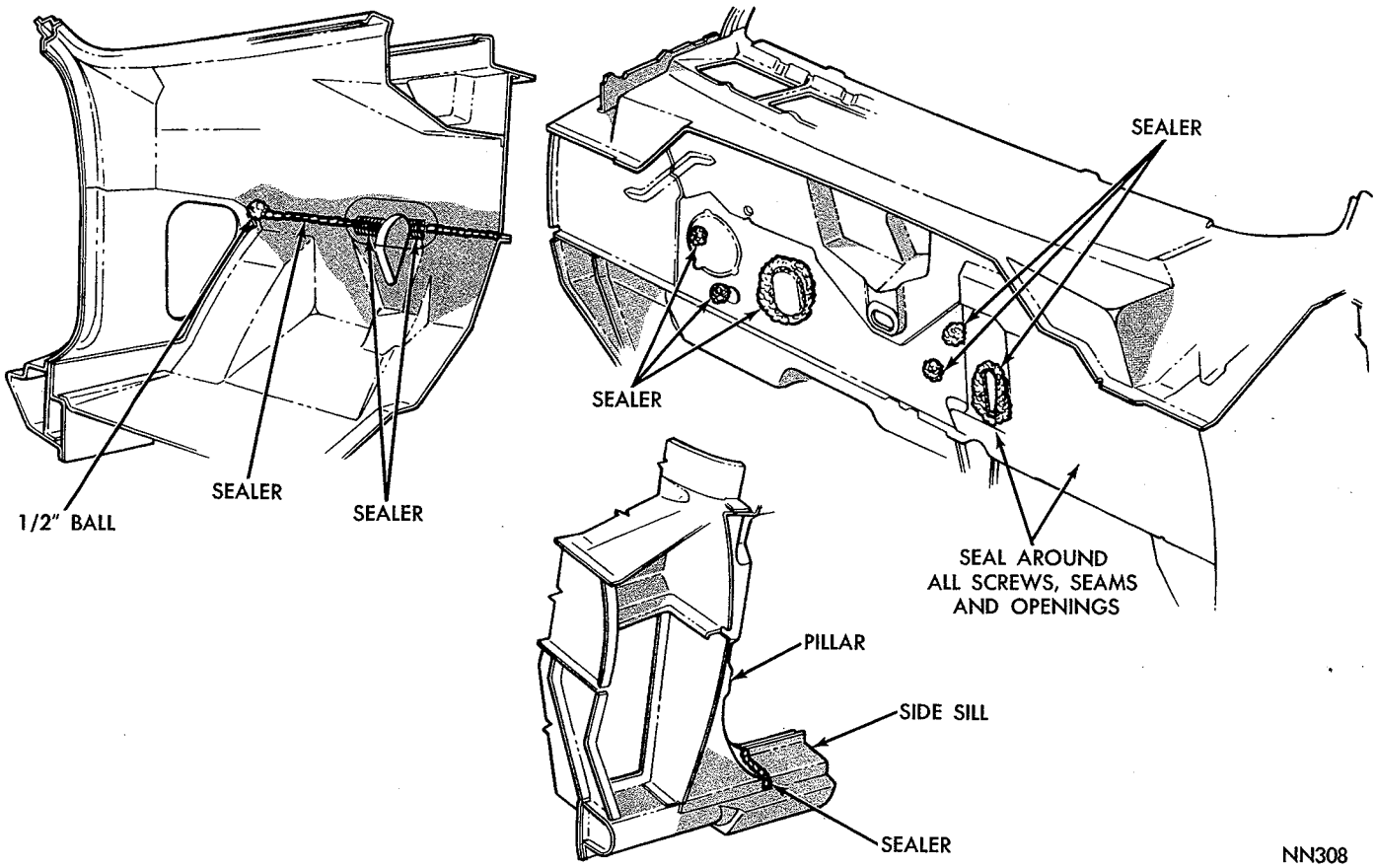


***Fig. 27—Cowl—Dash Panel—Floor Pan and Side Sill (Fury)***

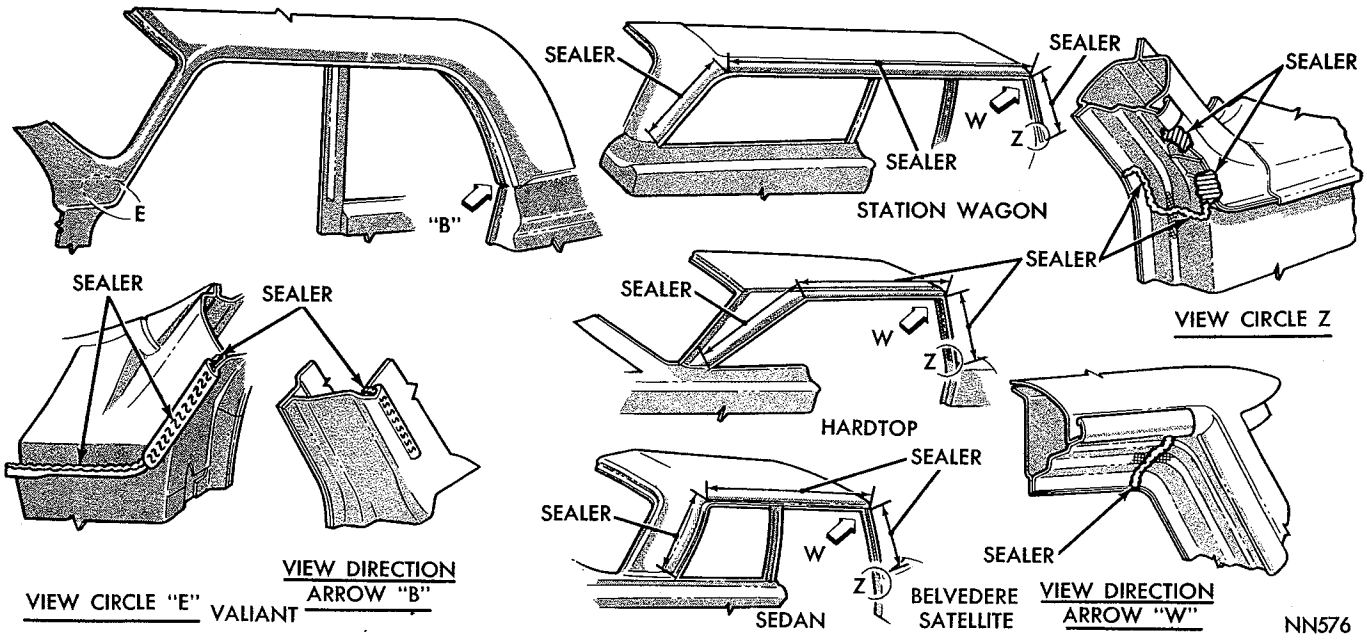


***Fig. 28—Drain Trough Areas (Belvedere—Satellite—Valiant)***

MyMopar.com

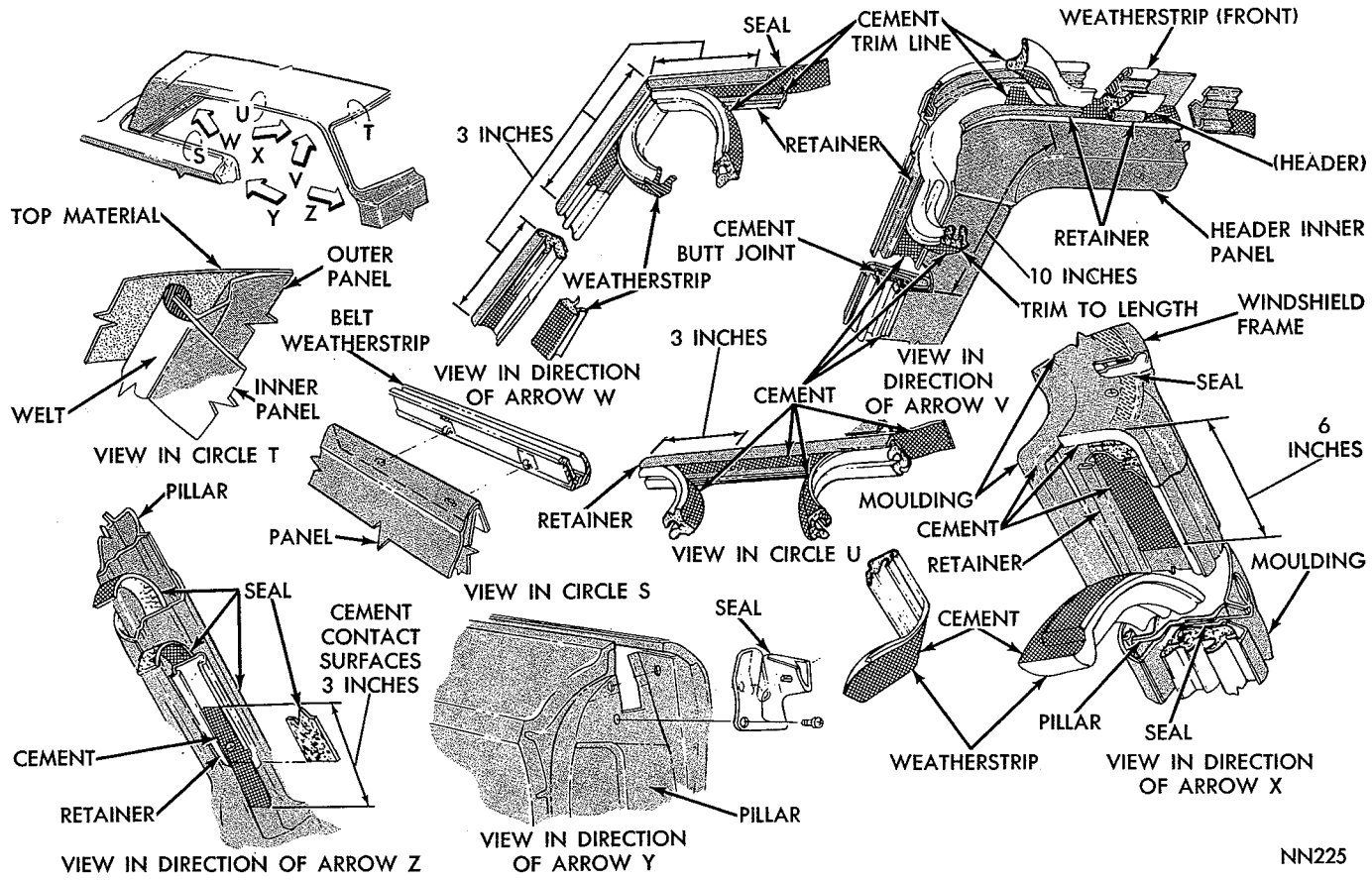


***Fig. 29—Lock Pillar Seals and Sealers***

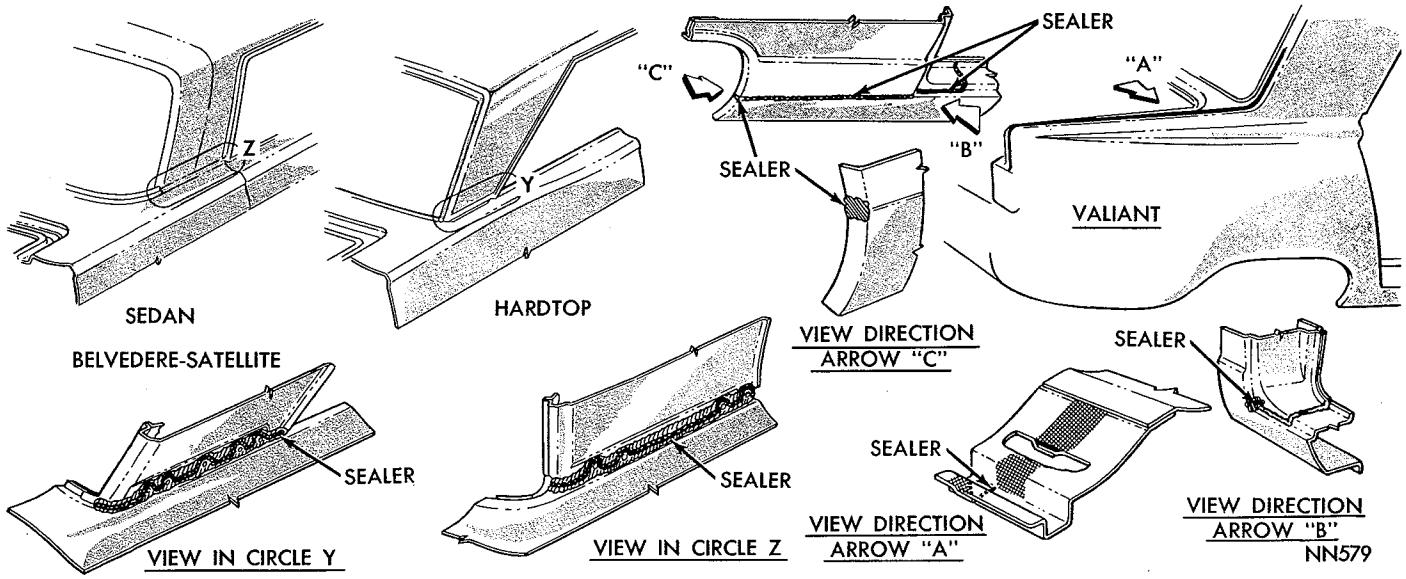


***Fig. 30—Roof Extension and Quarter Panel (Belvedere—Satellite—Valiant)***

MyMopar.com

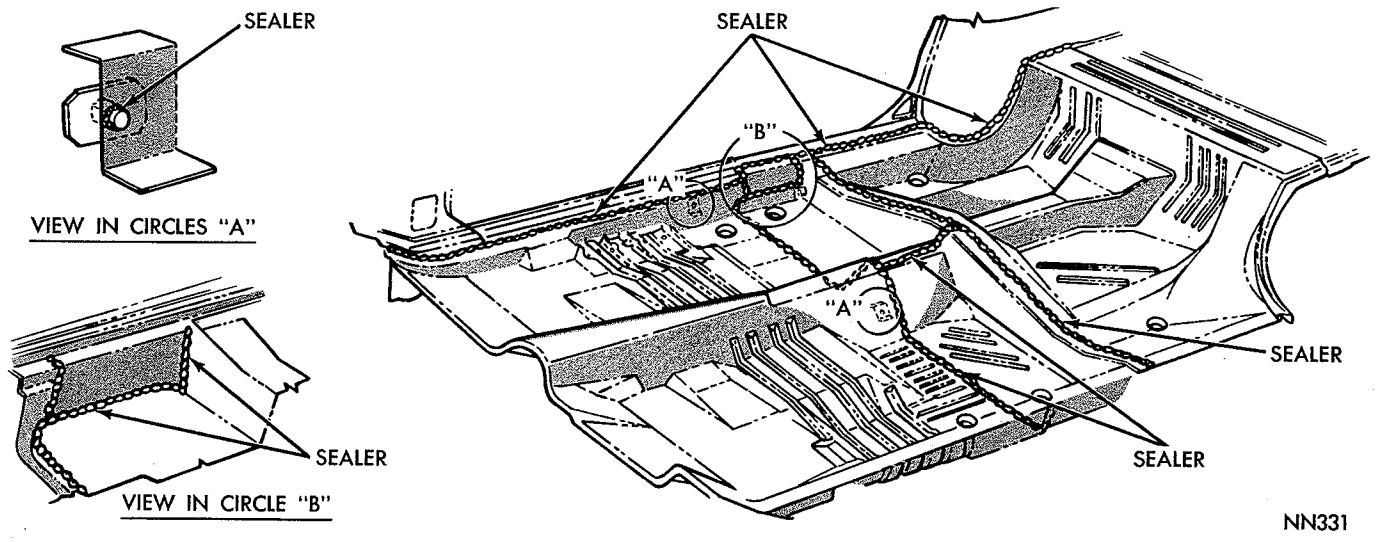


***Fig. 31—Floor Pan and Side Sills (Belvedere—Satellite)***

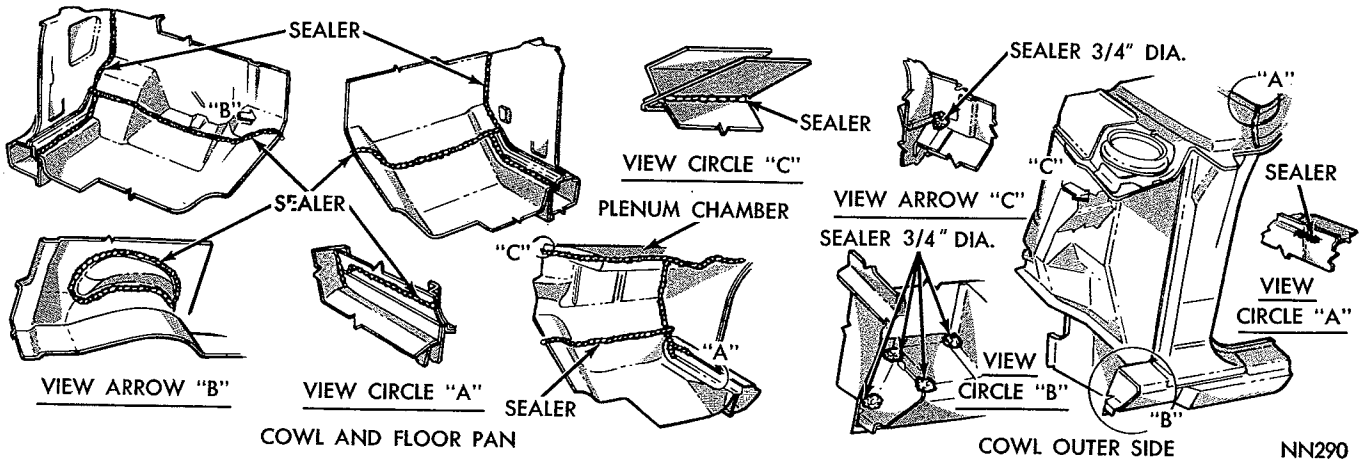


***Fig. 32—Cowl and Floor Pan Area (Belvedere—Satellite)***

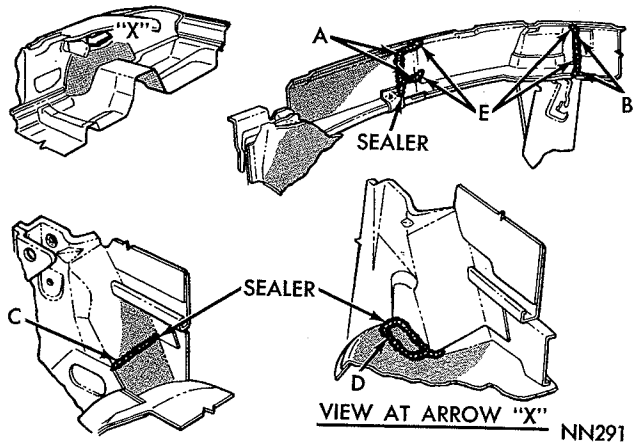


***Fig. 33—Wheelhouse and Belt Bar (Valiant)***

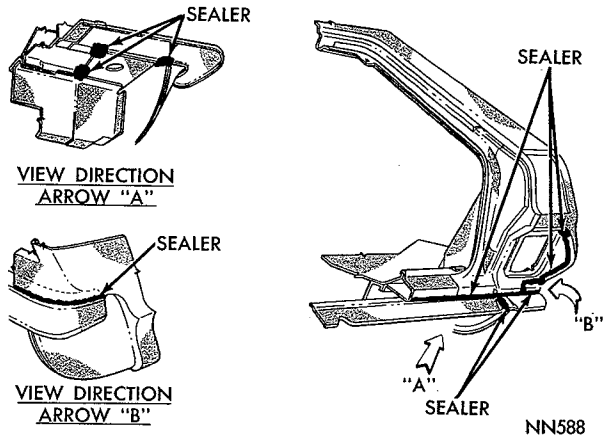


***Fig. 34—Stone Deflector Area (Fury)***

MyMopar.com

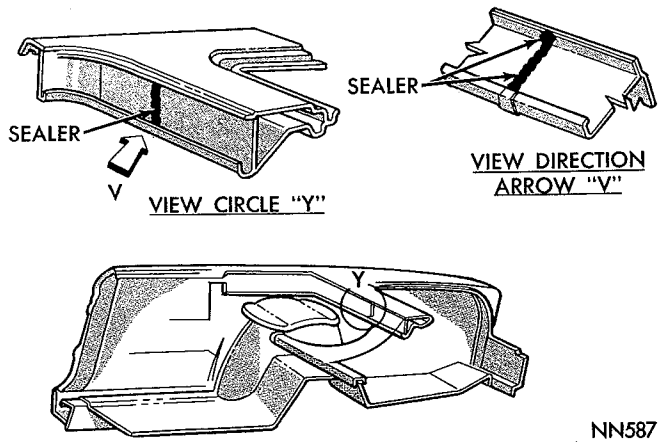


Fig. 35—Wheelhouse and Belt Bar (Fury)

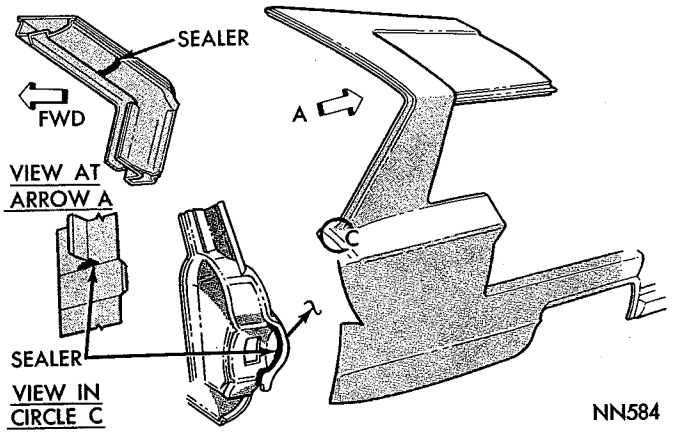


Fig. 36—Tail Gate Opening and Pillars (Fury)

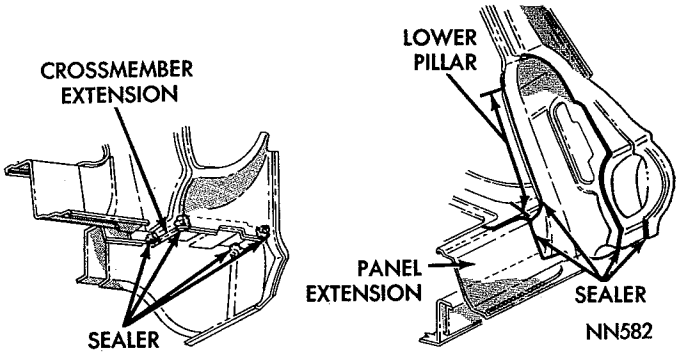


Fig. 37—Tail Gate and Tail Lamp Opening (Fury)

# VINYL ROOF COVERING

## INDEX


| | Page |
|---|---|
| Air Bubble Removal | 146 |
| Cover Replacement—Fury | 142 |
| Satellite | 14 |
| Valiant—Barracuda | 14 |


## SERVICE PROCEDURES

### COVER REPLACEMENT

#### *Removal*

**If solvents are used to remove the old covering and cement, care must be used to prevent damage to the surrounding areas. Use a well vented area. The entire roof panel surface must be clean and smooth.**

The body should be masked at all areas next to the outer edges of the cover application.

Depending upon type of cover application, remove mouldings at windshield and rear window, drain trough, roof panel extension, and roof areas. Remove sealer from drain trough, windshield and rear window reveals, roof and panel extensions. Remove retainers from drain trough and roof areas.

#### *Installation—Satellite—Fury Models*

(1) Mask body (Fig. 1) from edge of drain trough across upper "A" pillar, across windshield and rear window reveal, across top of deck upper and bottom of roof panel at the belt line.

(2) Locate and mark center line of roof panel an vinyl cover at front and rear ends.

(3) Apply a thin film of cement to the center fou

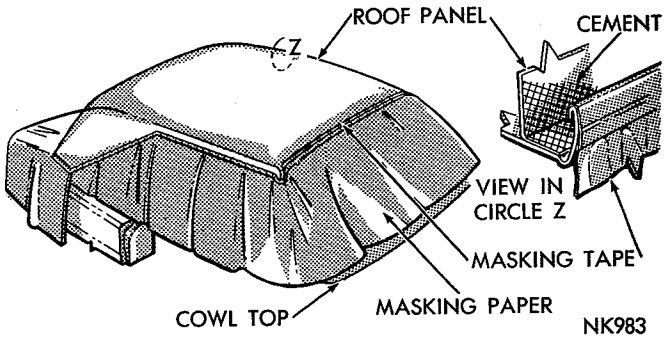


Fig. 1—Masking the Body (Satellite—Fury)

MyMopar.com

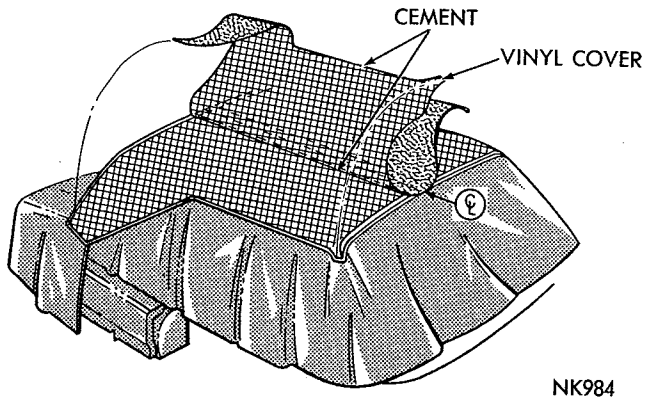


**Fig. 2—Positioning Cover to Roof Panel**

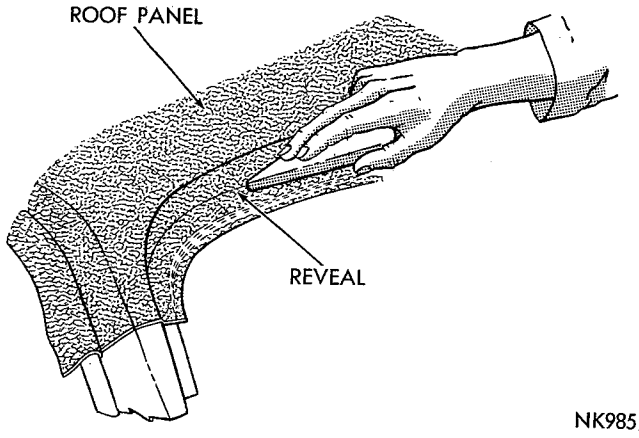


**Fig. 3—Positioning Cover in Window Reveal**

inches of roof panel and vinyl cover.

(4) When cement becomes tacky but not wet to the touch, position vinyl cover on roof, aligning the centerline marks.

(5) Apply cement to one half of roof panel and extension and to the vinyl cover half on same side (Fig. 2).

(6) When cement becomes tacky but not wet to the touch, position cover on roof.

(7) Repeat steps 5 and 6 for opposite side.

(8) Using a new paint roller, pressurize cover to the roof working from center area out toward drain troughs.

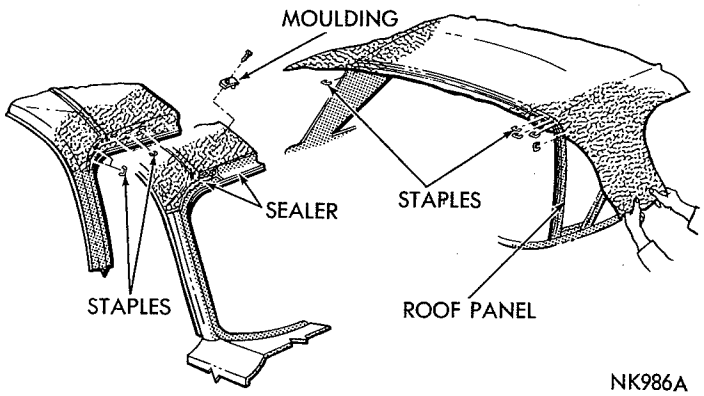


**Fig. 4—Stapling Cover at Window Reveal**

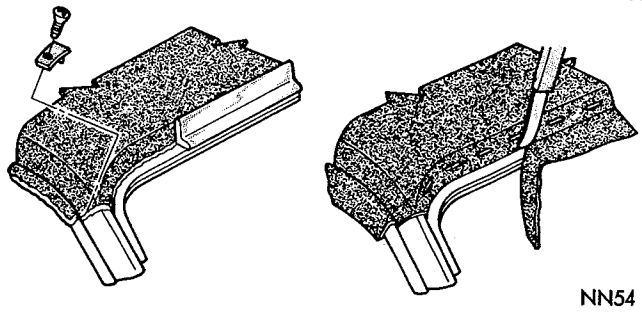


**Fig. 5—Trimming and Sealing at Window Reveal**

(9) Press cover into the windshield and rear window reveals using a dull pointed fibre tool (Fig. 3).

(10) Starting at the top center, secure cover to windshield reveal using staples spaced 1½ inches apart (maximum) or tacks spaced ¼ inch apart (Fig. 4).

(11) Position cover to the roof panel extension making certain all wrinkles are removed.

(12) Starting at the top center, secure cover to rear window reveal using staples spaced 1½ inch apart (maximum) or tacks spaced ½ inch apart (Fig. 4).

(13) Trim fabric at base of windshield reveal, halfway between upper and lower edges of pillar moulding (Fig. 5).

(14) Trim fabric at base of rear window reveal.

### Steps 15 through 18 (4 Door Models)

(15) Using a dull pointed tool, press fabric into the drain trough to achieve maximum contact of roof cover material to drain trough (Fig. 6).

(16) Grasp the outboard edge of cover and while pulling material outward and down, use the upper edge of drain trough flange as a breakover for draping material on to the outboard drain trough flange face (Fig. 6). **Care must be taken to avoid pulling loose the cover material** applied to base of drain trough.

(17) Press material against drain trough flange face for the full length of outboard sides of roof

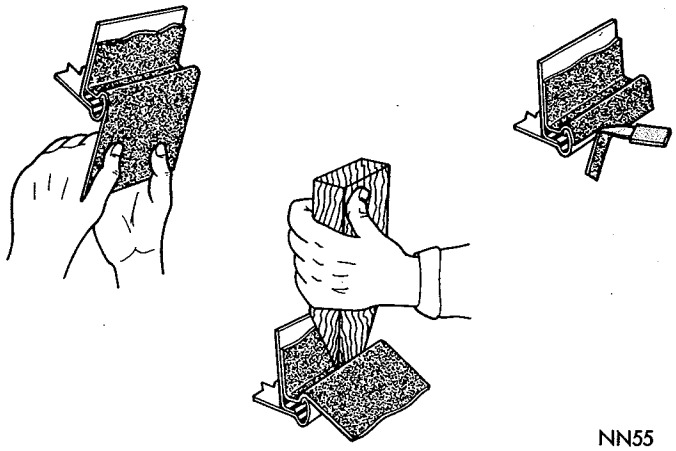


**Fig. 6—Positioning Cover at Drain Trough (4 Door)**

MyMopar.com

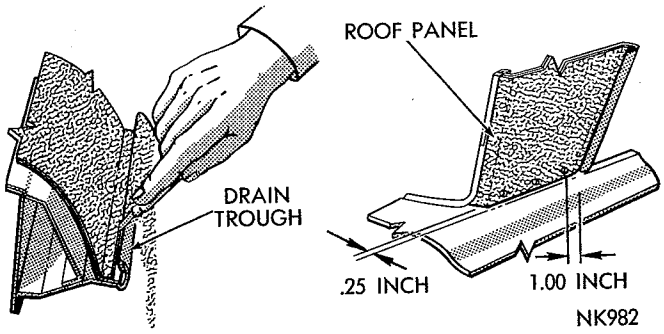


*Fig. 7—Trimming Cover at Drain Trough (2 Door)*

cover.

(18) Trim excess material hanging below drain trough flange about ⅛ inch above lower edge of the flange (Fig. 6).

### Steps 19 through 22 (2 Door Models)

(19) Trim cover along drain trough using the inboard face of drain trough as a guide (Fig. 7).

(20) Apply a bead of sealer in drain trough and smooth out to seal edge of cover (Fig. 8).

(21) Snap in front roof panel cover side retainers, making sure they are firmly seated.

(22) Snap in rear roof panel cover side retainers, making sure they are firmly seated.

(23) Locate and drill index hole for front pillar moulding upper locating boss (Fig. 5).

(24) Apply a bead of sealer to edge of cover and blend upward to form a seal over staples and edge of cover. Extend sealer across trimmed edge of cover on the "A" post (Fig. 5).

(25) Locate and punch holes in cover at the roof extension belt line.

(26) Trim cover on a line ¼ inch below the belt

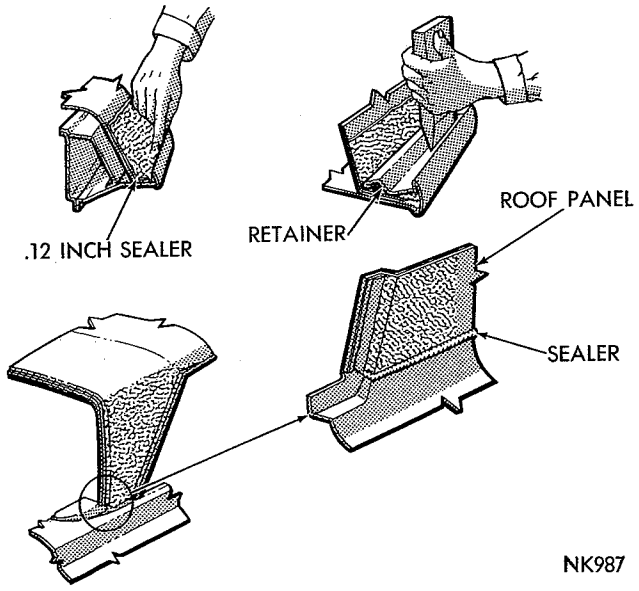


*Fig. 8—Installing Retainers at Drain Trough (2 Door)*

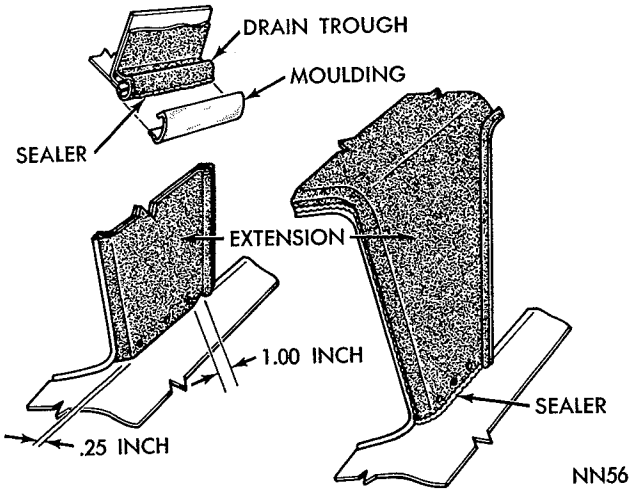


*Fig. 9—Sealing Cover at Drain Trough and Roof Extension*

line moulding holes and curving upward to meet drain trough (Fig. 9).

(27) Apply a bead of sealer to the trimmed edge of cover at the roof panel and smooth out to form a seal (Fig. 9).

(28) Install sealer along the entire length of outboard trimmed edges of cover material to seal exposed edge adjacent to drain trough flange.

(29) Apply a ¼ inch ball of sealer to the index studs of pillar mouldings.

(30) Position moulding by inserting a locating pin in index hole and align moulding.

(31) Using hole in moulding as a guide, drill a .120 diameter hole in pillar and fasten in place with a screw.

(32) Install side drain trough mouldings (Fig. 9).

(33) Install windshield and rear window mouldings.

(34) Remove masking tape and masking paper.

(35) Inspect cover for air bubbles.

### Installation—Valiant—Barracuda Models

(1) Mask the Valiant body from edge of drain trough across lower "A" pillar, across windshield and rear window reveal and across top of deck upper panel and bottom of roof panel extension.

(2) Mask the Barracuda body across windshield reveal, across "A" pillar lower end and to the rear of the roof panel cover retainer.

(3) Locate and mark center line of roof panel and vinyl cover at front and rear ends. Mark location of retainer holes on masking paper to aid in installation.

(4) Apply a thin film of cement to the center four inches of roof panel and vinyl cover.

(5) When cement becomes tacky but not wet to the touch, position cover on roof aligning the centerline marks.

(6) Apply cement to one half of roof panel and extension (Signet) to vinyl cover half on same side

MyMopar.com

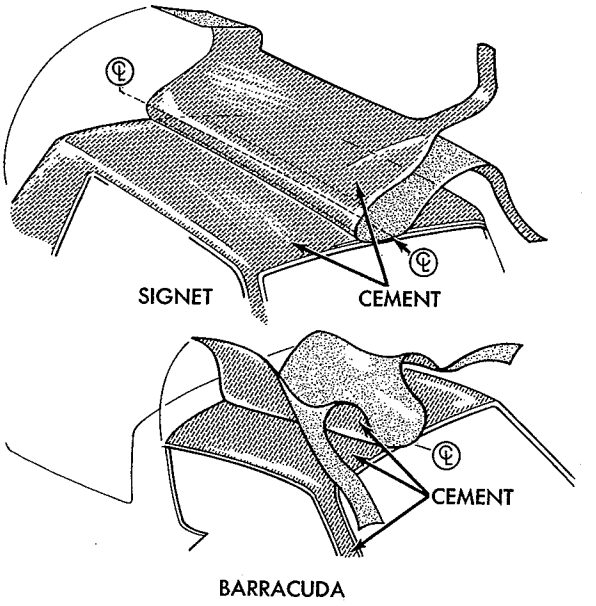


***Fig. 1—Positioning Cover on Roof (Valiant—Barracuda)***

(Fig. 1).

(7) When the cement becomes tacky but not wet to the touch, position the cover on the panel.

(8) Repeat steps 6 and 7 for opposite side.

(9) Using a new paint roller, pressurize cover to the roof, working from center toward drain troughs.

(10) Press cover into windshield reveal and on Signet Models the rear window reveal using a dull pointed fibre tool (Fig. 2).

(11) Press cover into drain trough areas.

(12) Starting at top center, secure cover to windshield reveal using staples spaced 1½ inches apart (maximum) or tacks spaced ½ inch apart (Fig. 3).

(13) Position cover to the Signet roof panel extension (Fig. 4) making certain all wrinkles are removed.

(14) Starting at top center, secure cover to the Signet rear window reveal using staples spaced 1½ inches apart (maximum or tacks spaced ½ inch apart (Fig. 3).

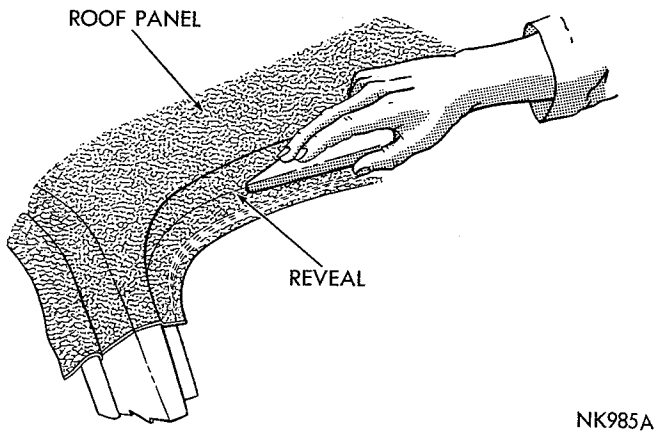


***Fig. 2—Positioning Cover in Window Reveal***

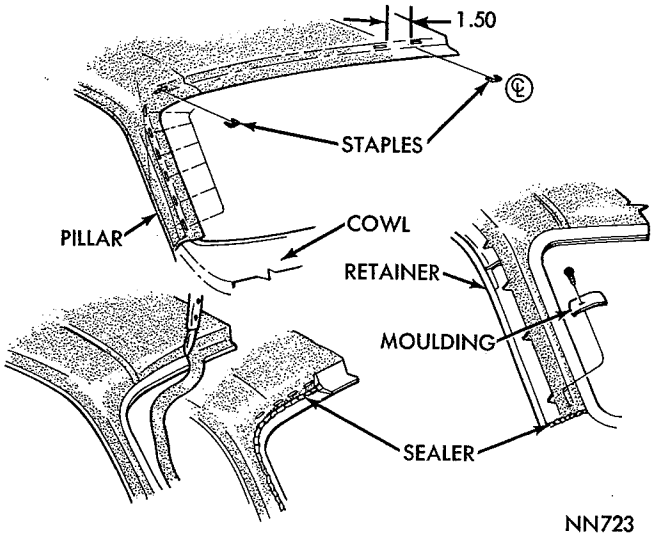


***Fig. 3—Securing Cover to Windshield Reveal***

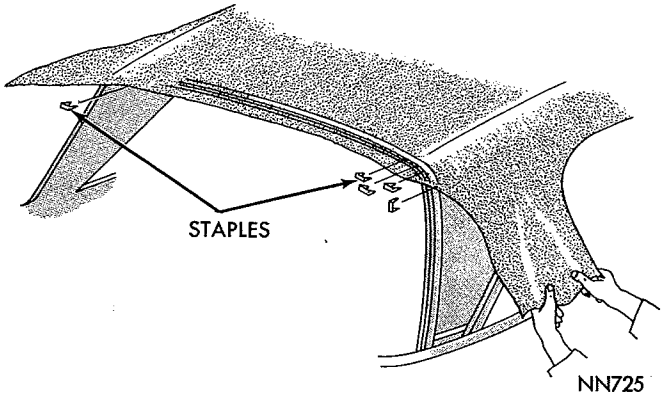


***Fig. 4—Positioning Cover on Roof Extension***

(15) Trim fabric at base of windshield and rear window reveals.

(16) Apply a bead of sealer to edge of cover and blend upward to form a seal over staples and edge of cover (Fig. 3).

(17) Position the Barracuda rear roof retainer on the cover. Locate screw holes in panel and install seal-

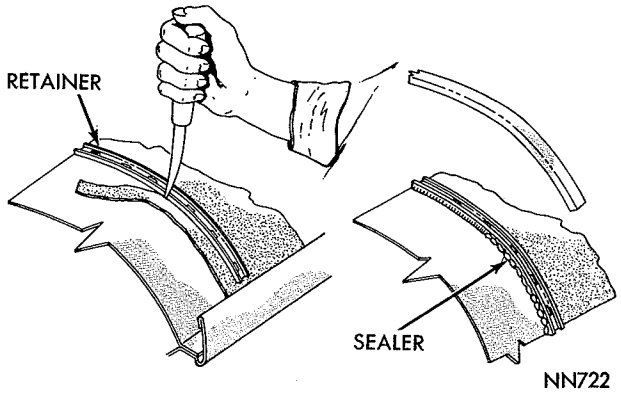


***Fig. 5—Roof Cover Rear Retainer***

MyMopar.com

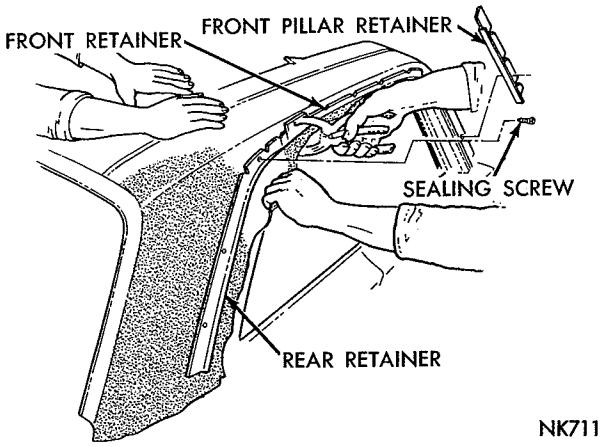


*Fig. 6—Installing Side Retainers*

ing screws (Fig. 5).

(18) Trim excess material at rear of retainer, using retainer as a guide.

(19) Apply a bead of sealer to edge of cover. Press sealer into retainer so it will not show when moulding is installed.

(20) Using body clamps, install cover retainers in drain trough (Fig. 6). **Make sure the cover is pulled towards the trough and is locked securely below the retainer. This operation will require two men.** Align the retainer screw holes with the existing holes in the roof panel.

(21) Secure retainers to body with sealing screws.

(22) Remove excess fabric along drain trough using outboard edge of retainer as a guide.

(23) Trim and locate end of cover at base of "A" pillar (Fig. 3) so trimmed edge will be covered by moulding. Apply a bead of sealer over edge of material and install moulding.

(24) Apply a bead of sealer in drain trough and smooth out to seal edge of cover (Fig. 7).

(25) Apply a bead of sealer to the exposed edge of cover at roof panel extension and belt line.

(26) Locate and punch holes in cover material at the extension for the belt line moulding. Place small balls of sealer on the moulding studs before installing.

## AIR BUBBLE REMOVAL

(1) Place strips of masking tape over surface of bubble.

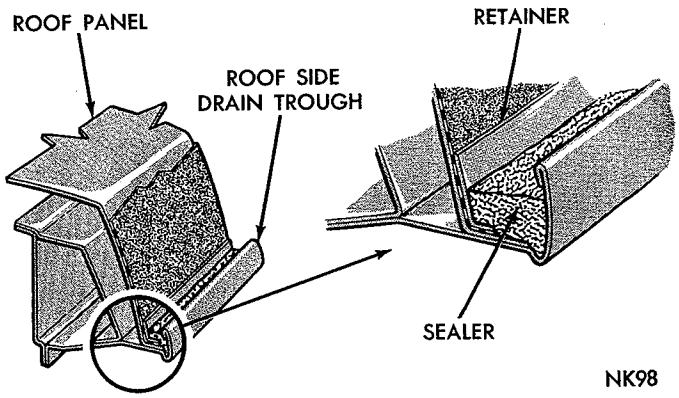


*Fig. 7—Installing Sealer at Drain Trough*

(2) Using a No. 19 hypodermic needle and suitable syringe, insert 3M Vinyl Trim Adhesive No. 8064 (or equivalent) into bubble area. **Extreme care must be used to avoid depositing any adhesive on the top surface of the vinyl cover.** The perforation must be made in the center of the bubble, through the masking tape and vinyl top material. Approximately 0.5 mil of adhesive per square inch should be used.

(3) Remove needle and work adhesive to cover the affected area by pressing vinyl to the roof carefully. This will also transfer some of the adhesive to the surface of the vinyl cover.

(4) Allow cement to dry 5 minutes at room temperature.

(5) Heat bubble area with a relatively low heat (150° 160°F.) until bubble area begins to enlarge in circumference. Infra-red heat lamps provide a suitable source of heat.

(6) Remove heat source and allow cover to cool. A method of rapid cooling will be beneficial.

(7) Using a DRY No. 19 hypodermic needle, puncture vinyl cover 4 times equidistant around the outer circumference of bubble to provide an escape route for entrapped solvent and air.

(8) After bubble collapses, press cover to the metal surface, starting from one side of bubble and working toward opposite side until it conforms to the metal surfaces and all raised surfaces disappear.

(9) Keep car from hot sunlight and other direct heat sources.

(10) Examine top after the 24 hour period, and, if necessary, repeat the procedure.

# BODY AND FRAME ALIGNMENT

## INDEX


| | Page |
|---|---|
| FRAME | |
| Body Alignment (Belvedere—Satellite—Valiant) | 150 |
| Fury | 150 |
| Gauge Alignment Chart | 149 |
| Forestructure Alignment | 147 |
| Replacement | 147 |


MyMopar.com

# SERVICE PROCEDURES

## FRAME ALIGNMENT—Fury Models

The various frame dimensions (Figs. 1, 2 and 3) may be used as a guide in measuring frame alignment. Diagonal measurements should be taken when straightening frame.

Measure distance between points connected by line "A", (Fig. 3). This distance should agree within ¼ inch with distance between points connected by line "B".

The diagonals (Fig. 3) represent only one of the few that may be checked. **Care should be taken to make sure that any two diagonals compared represent exactly corresponding points on each side of the frame.**

Minor frame alignment can usually be corrected by straightening bent frame parts. A badly distorted frame can in most cases be replaced more economically than by attempting repairs.

## FRAME REPLACEMENT

The forestructure (stub frame) is attached to the body at ten locations—four at brackets extending down from the cowl panel and six under the front passenger compartment where the frame is joined to the underbody crossmember.

The body to frame alignment measurement should be performed whenever the stub frame has been removed, replaced, repaired or the front end sheet metal cannot be properly aligned.

### *Removal*

(1) Disconnect battery, drain cooling system and remove heater hoses from engine.

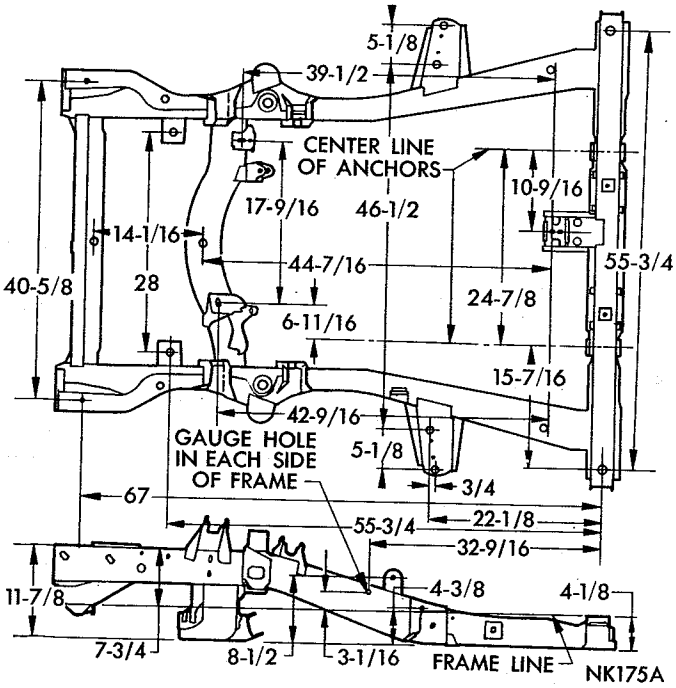


*Fig. 1—Frame Dimensions—Fury (6 Cyl.)*

(2) On air conditioned units, use safety goggles when discharging the system and remove hoses from air compressor.

(3) Disconnect electrical leads at junction block and all connections between engine and dash panel.

(4) Remove bolts attaching hood torsion bar brackets to cowl and wheelhouse (Fig. 4).

(5) Remove brake line at master cylinder and power brake hose from brake unit.

(6) Disconnect throttle linkage and steering gear at

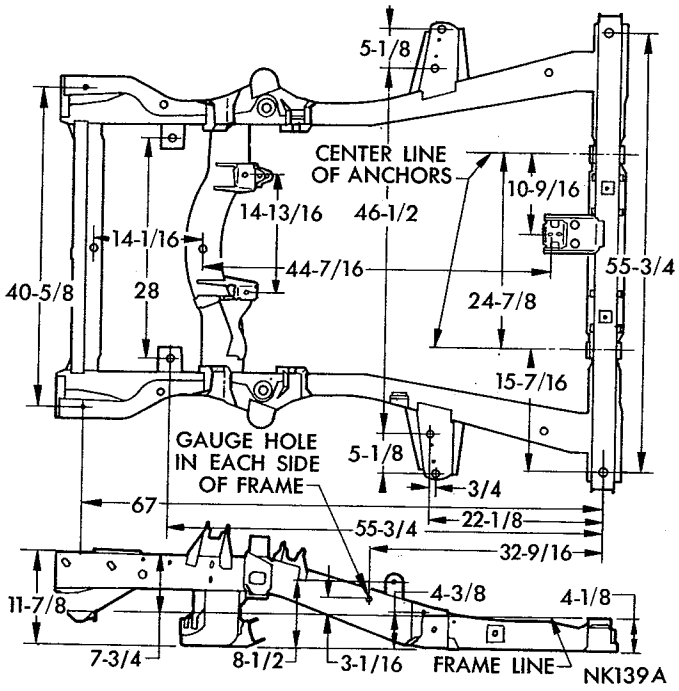


*Fig. 2—Frame Dimensions—Fury (8 Cyl.)*

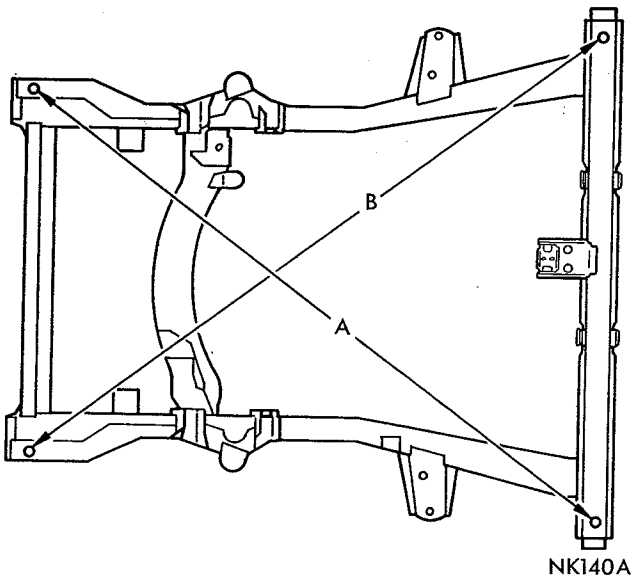


*Fig. 3—Frame Diagonal Measurements*

MyMopar.com

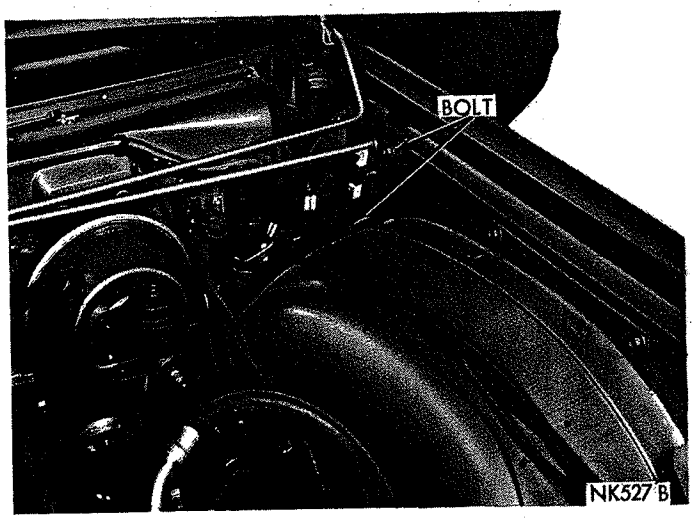


*Fig. 4—Torsion Bar Bracket Attachment*

the flexible coupling.

(7) Disconnect windshield washer tube at cowl connection.

(8) Raise vehicle on a hoist, and remove propeller shaft at transmission, exhaust pipe at muffler, parking brake cable, transmission shift cable, fuel line at frame and brake line at frame "T".

(9) Lower vehicle and place on floor stands. The floor stands should be placed under rear axle and under forward edge of floor sills. **To protect sills, wooden blocks should be placed between floor stands and the sills.**

(10) Disconnect radio antenna from radio.

(11) With both front doors open, remove fender to "A" post bracket attaching nuts (Fig. 5).

(12) Remove filler plate between the "A" post and rear of fender.

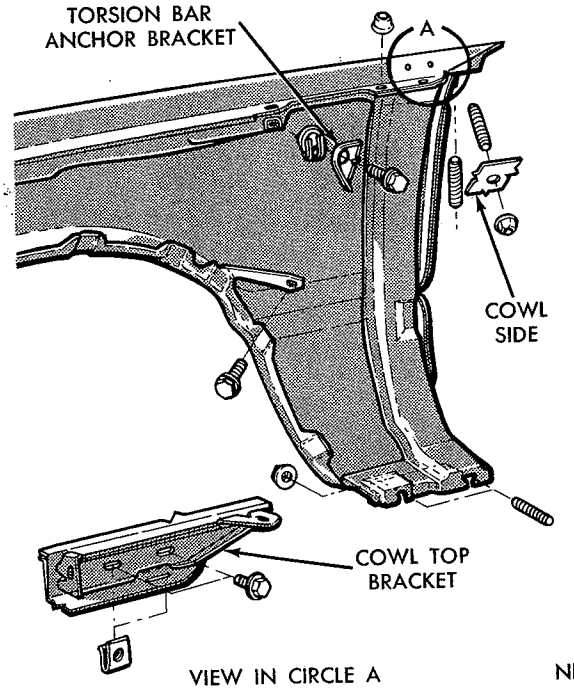


*Fig. 5—Fender to Cowl Attachment*

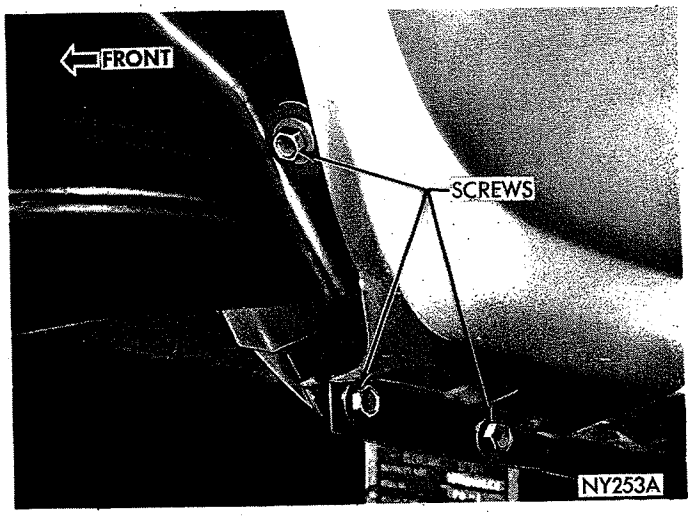


*Fig. 6—Fender to Body Frame Mounting*

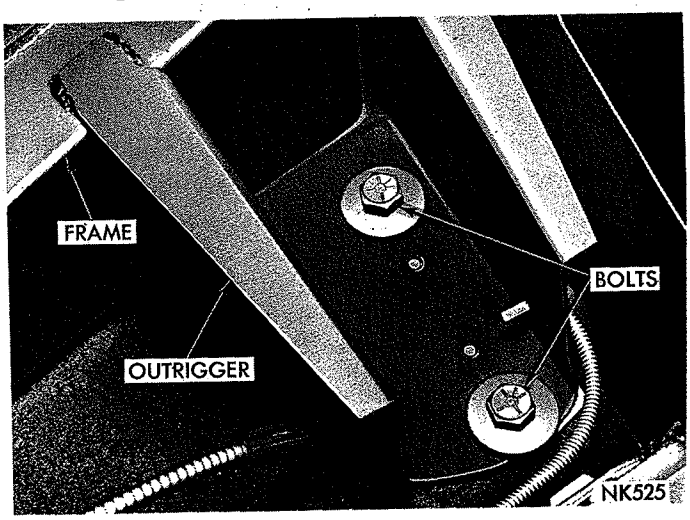


*Fig. 7—Body to Outrigger Mounting*

(13) Remove fender to cowl stud nuts and fender to floor sill bolts (Fig. 6).

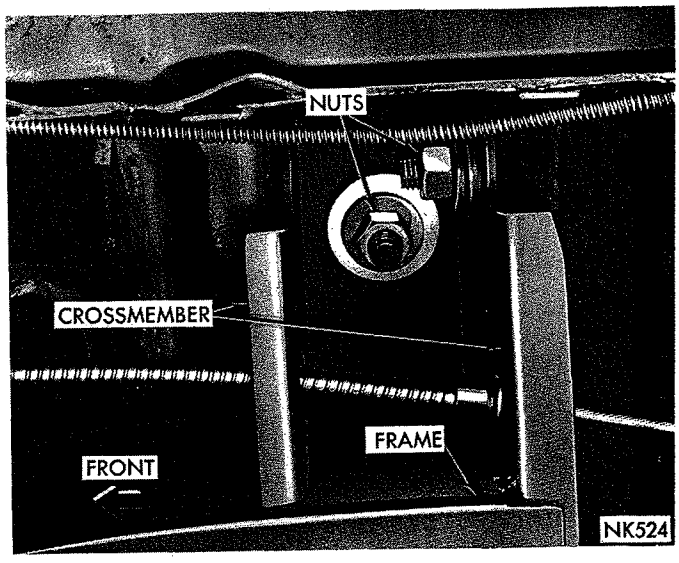


*Fig. 8—Body to Crossmember Mounting*

MyMopar.com

(14) Place a hydraulic jack under forestructure rear cross member to hold it in position when body to frame mounting bolts (Figs. 7 and 8) are removed. **Two bolts are located near top of curved portion of the body to frame cross member.**

(15) Remove frame to body bolts, lower front end assembly and at same time, move front end assembly out and away from the body (make sure antenna lead is free from side cowl).

(16) If frame is to be replaced, transfer serviceable parts to new frame.

### *Installation*

(1) Position forestructure assembly under body, guide tops of fenders past windshield moulding and align frame attaching bolt holes.

(2) Install body to frame bolts and nuts and tighten to 75 foot-pounds.

(3) With both front doors open, install fender to "A" post attaching nuts and tighten securely.

(4) Install "A" post filler plate.

(5) Install floor sill fender to cowl stud nuts and fender to bolts.

(6) Guide antenna cable through cowl and connect to radio.

(7) Connect windshield washer tube, steering gear at coupling and throttle linkage at cowl bracket.

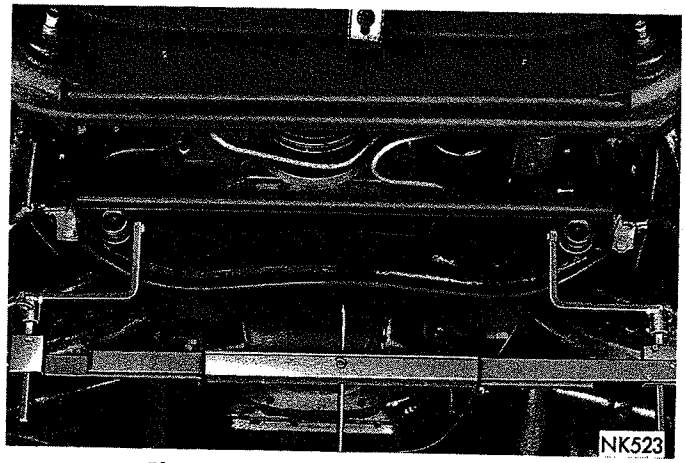


*Fig. 9—No. 1 Gauge in Position*

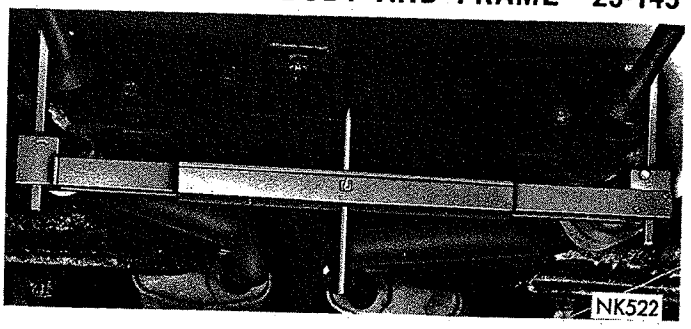


*Fig. 10—No. 2 Gauge in Position*

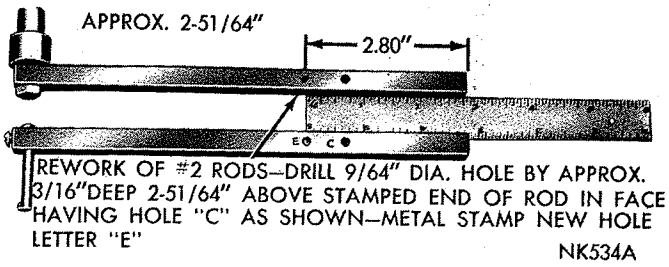


*Fig. 11—Rework of No. 2 Gauge*

(8) Connect master cylinder line and power brake hose.

(9) Install hood torsion bar brackets to cowl and wheel house (Fig. 4).

(10) Connect electrical leads to junction block and all connections between engine and dash panel.

(11) Connect heater and air conditioning hoses and battery.

(12) Raise vehicle and install propeller shaft, exhaust pipe muffler, parking brake cable, transmission

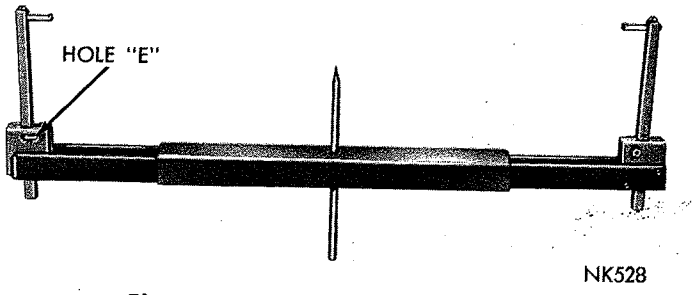


*Fig. 12—No. 2 Gauge Assembled*

## GAUGE ALIGNMENT ADAPTER CHART

| Gauge and Position | Wheelbase | Distance Below Body "O" Line |
|---|---|---|
| No. 1—Front | 119.5" | 3.07"—Letter "D" Hole @ Centerline of Lower Control Arm Inner Pivot Shaft (1/4" forward of Nut Washer) |
| No. 2—Middle | 119.5" | 6.36"—Letter "E" hole over top of the torsion bars in front of the rear anchor boot. |
| No. 3—Rear | 119.5" Except Station Wagon | 4.82"—Letter "D" Hole @ Centerline of Front Eye of Rear Spring. |
| No. 3—Rear | 121.5" Station Wagon | 5.32"—Letter "C" Hole @ Centerline of Front Eye of Rear Spring. |

MyMopar.com

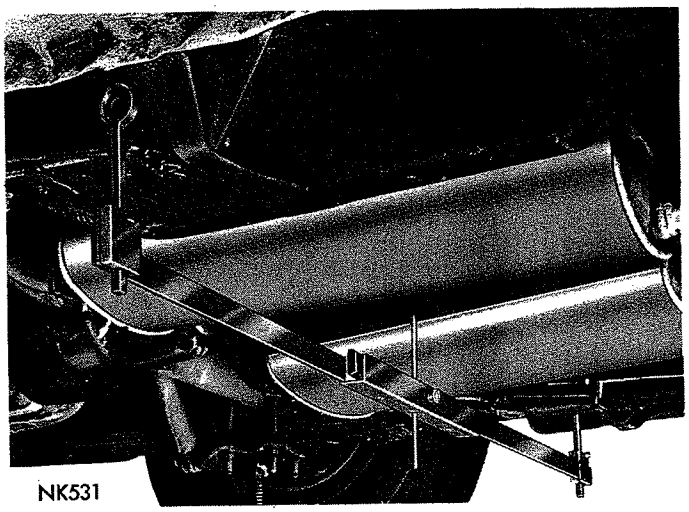


*Fig. 13—No. 3 Gauge in Position*

shift cable, fuel line and brake line.

**Bleed brake system, aim headlights, fill cooling system, charge air conditioning system, align front end sheet metal and front suspension system after adjusting body to frame alignment has been completed.**

### *Body to Frame Alignment—Fury*

To measure the body to frame alignment, using Tool C-3802, refer to the "Gauge Adapter Chart" to determine the correct gauge adapter positions.

**All attaching rods must be placed outboard of their respective attaching positions so when closing the self centering gauges and tightening center wing screw, the gauges will not fall off.**

(1) The front 45 inch gauge is suspended from centerline of lower control inner pivot shaft. Remove nut cotter pin and select proper sleeve to fit over hex of nut (Fig. 9).

(2) Hang 36 inch middle gauge over top of torsion bars (using a ¼" diameter pin) immediately in front of rear anchor boot. Position 2" in front of forward

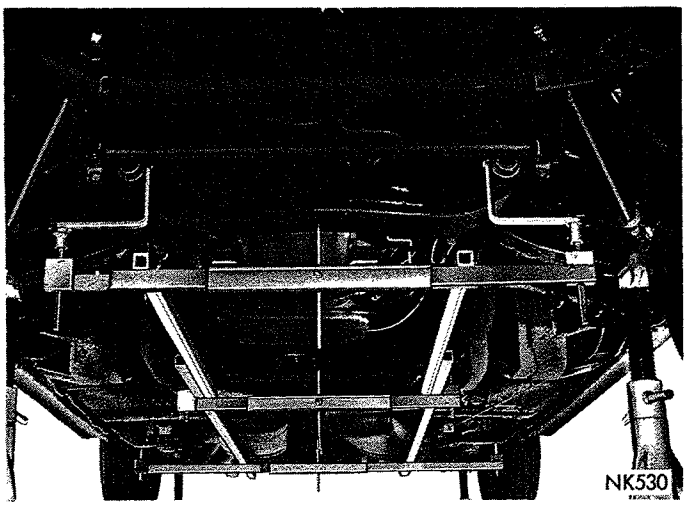


*Fig. 14—Extruded Bars in Position*

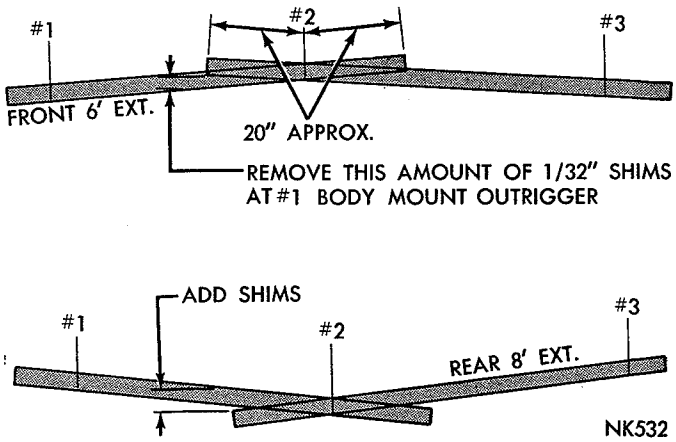


*Fig. 15—Measuring Alignment*

face of rear crossmember of stub frame (Fig. 10).

The No. 2 gauge rods should be reworked by drilling a 9/64" diameter hole in the face containing hole "C" (Fig. 11). Assemble the gauge with pins in holes "E" (Fig. 12).

(3) The rear frame gauge is suspended from the centerline of the rear spring pivot bolt. (The attached rod eye and/or adapter sleeve fits over outboard hex of bolt or nut. (Fig. 13).

(4) Place the checking bars over No. 2 and No. 3 gauges, and the short bars over No. 1 and No. 2 gauges so they overlap approximately 15 to 20 inches (Figs. 14 and 15). The Number 1 body outriggers should be shimmed until check bars are in line. The diagrams in Figure 15 indicate conditions for removal and/or addition of shims. Both sides should be within 1/16 of each other.

### *Body Alignment (Belvedere—Satellite—Valiant)*

Body alignment may be accurately measured by the following method. Elevate vehicle to a level position over a clean and smooth floor.

Refer to (Figs. 1, 2 and 3) and place the line of a plumb-bob on point "A" with the plumb-bob just contacting the floor. Mark the plumb-bob contact point on floor. Repeat process at points B, C, D, E and F on both sides of body. Snap a chalk line between points as illustrated. **Care should be taken that all diagonals compared represent the corresponding measuring points.**

Compare the dimensions with the specifications. All matching point to point dimensions should agree within ¼ inch.

In making any body opening measurements, always compare the matching measurements of both sides of the vehicle. All dimensions must be measured at the welded joints of the body to insure uniform measurements.

MyMopar.com

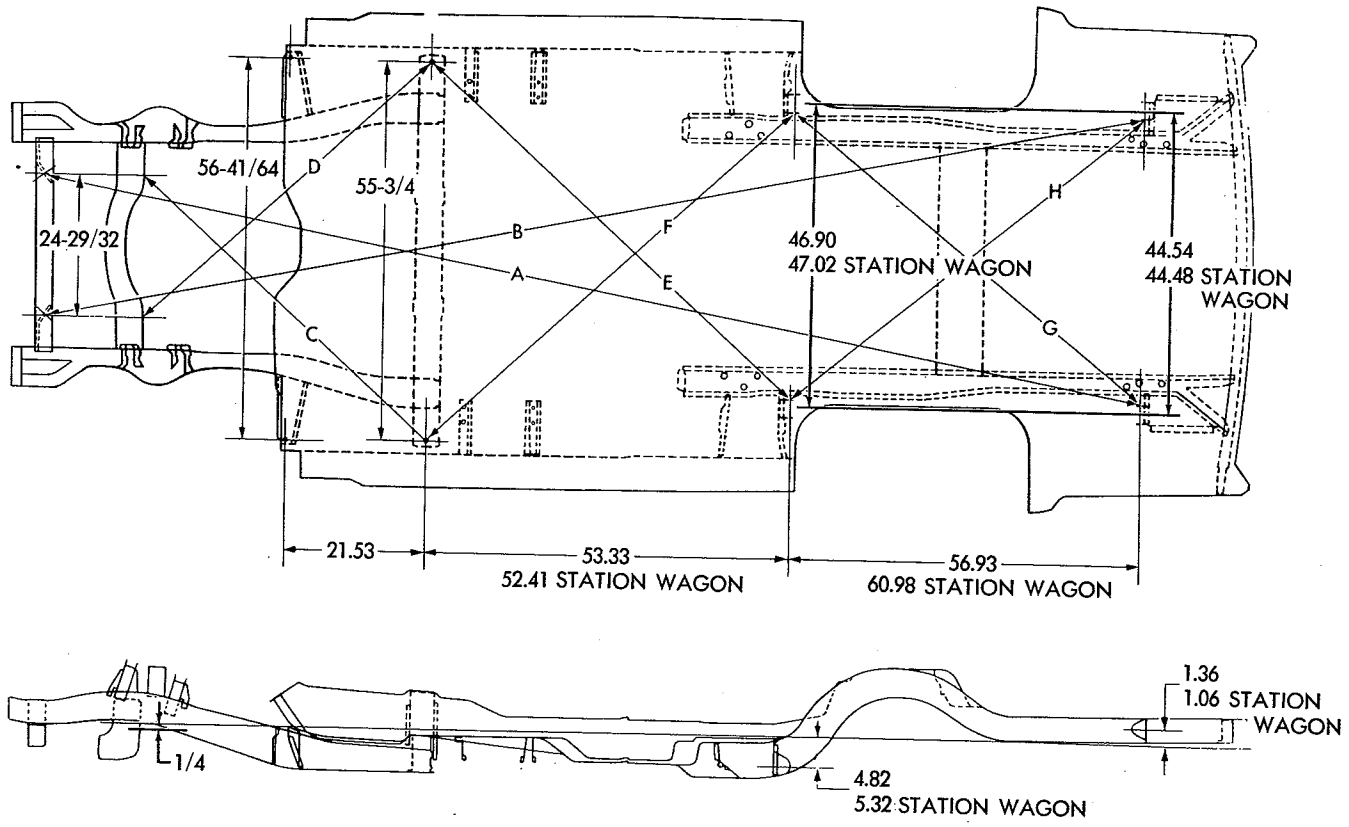


***Fig. 1—Body Frame Dimensions (Fury)***

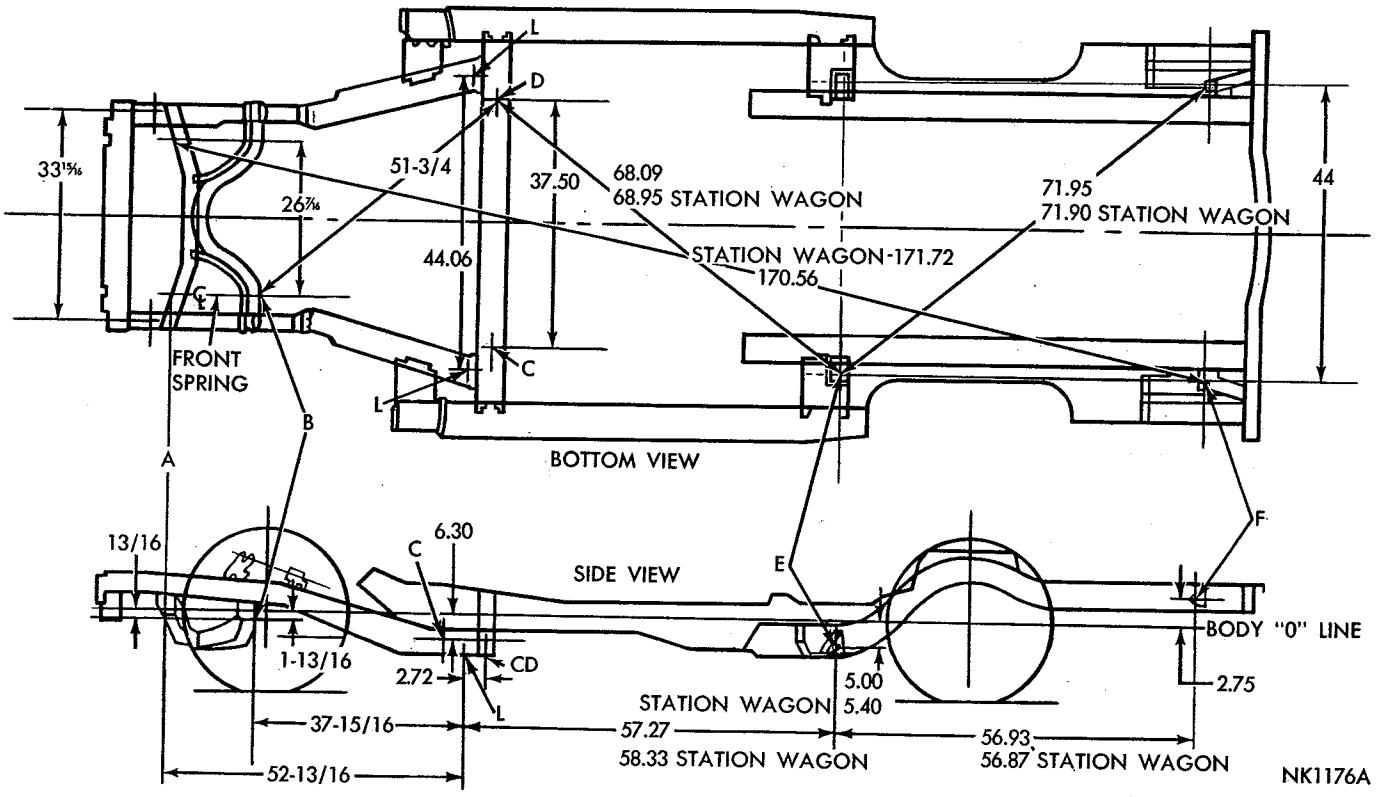


***Fig. 2—Body Frame Dimensions (Belvedere—Satellite)***

MyMopar.com

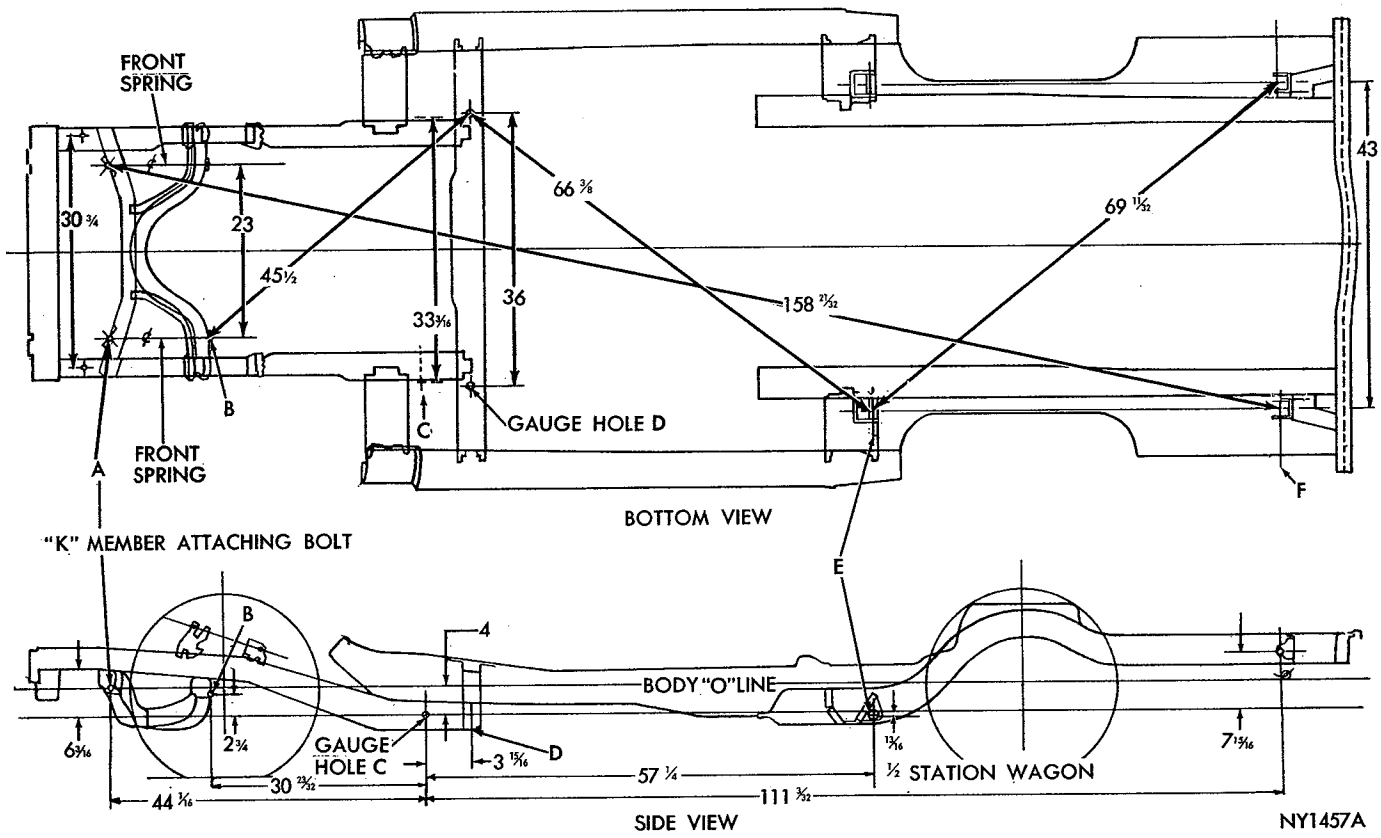


***Fig. 3—Body Frame Dimensions (Valiant)***

## REFINISHING PROCEDURES

### INDEX


| | Page |
|---|---|
| Acrylic Finishes | 152 |
| Definitions—Technical Terms | 152 |
| Galvanized Metals | 153 |
| Polishing and Buffing | 153 |
| Refinishing | 153 |
| Rust Protection | 153 |


### ACRYLIC FINISHES

The vehicles are finished in an acrylic enamel. To determine the correct color and part number of the enamel used on the car, refer to the code on the body number plate and then locate the corresponding code on the dealer paint chart.

### DEFINITIONS OF TECHNICAL TERMS

### COAT—SINGLE

This means one coat overlapping to give complete coverage.

### COAT—DOUBLE

A double coat means to first spray a single coat with vertical strokes and then across with horizontal strokes, or vice versa.

### DRYING

The drying or hardening of a film goes through several stages. The first is known as "Dust-free" and is the time required for a film to reach the condition where, if any dust settles on it, the dust will not become imbedded, but may be wiped off after the film has hardened. the second stage is known as "tack-free" and is the time required for a film to reach the condition where it may be touched with light pressure of the finger. The third is "hard-dry" and is the time required for the film to become thoroughly hard so that it may be rubbed and polished.

### FEATHER-EDGING

This is the tapering of the edges of a finish so that when the finger is passed over it no break will be felt. Feather-edging is usually done with water and sandpaper on a sanding block.

### FERROUS AND NON-FERROUS METALS

Ferrous metals are those which are made from iron (steel). Non-ferrous metals are those which are not made from iron or do not present an iron (steel) sur-

MyMopar.com

face, such as aluminum, aluminum alloys, brass, copper and magnesium.

## FLASH

This is the term applied to a coat of a product when enough of the solvent has passed off for recoating.

## MIST COAT

This is a coat of thinner to which may be added a small amount of retarder and applied as a final coat to increase flow and lustre of lacquer-type finishes.

## PRIMING

The function of a primer is to form a bond between the surface and the succeeding product.

## PUTTYING

A glazing putty is used for filling in small imperfections which are too deep to be taken care of by surfacer coats. It may be applied either before or after the last coat of surfacer.

## REDUCERS

Reducers are mixtures of volatile liquids used to reduce alkyd, synthetic and orthodox materials to the proper consistency for application.

## SANDING BLOCK

As a rule a sanding block is a flexible rubber block, so arranged sandpaper may be fastened to it securely it affords a good grip for the operator.

Whenever possible sanding should be done with a block as it distributes the pressures and gives a more uniform surface.

## SURFACING

The function of a surfacer is to prepare a smooth surface for the color coats.

## TACK RAG

This is a piece of cheesecloth that has been dipped in thin, non-drying varnish and then wrung out. It is kept in a container so that the varnish will not harden but will remain tacky. The tack rag is used to wipe off a surface or remove dust.

## THINNERS

Thinners are mixtures of volatile liquids used to thin lacquer-type finishing materials to the proper consistency for application.

## UNDERCOATS

All products used to prepare the surface to receive the color coats are classified as undercoats, such as primers, surfacers, putties, primer-surfacers and sealers.

## PAINT REPAIRS ON GALVANIZED METALS

To perform paint repairs on galvanized rocker panels or any other galvanized steel surfaces, care must be exercised when preparing the bare galvanized surface to properly accept the primer-surfacer and finish paint. Do not use short cut methods nor inter-mixing of materials.

### *Metal Preparation*

(1) Thoroughly sand the affected area to remove all corrosion products from the exposed metal surface while carefully feathering all paint edges.

(2) Wire brush or steel wool the entire metal surface and remove all grease or oil by wiping with a clean solvent.

(3) Treat the bare metal panel with Galvaprep (Ditzler or DuPont), R-M (Rinshed—Mason) 802 Galvanize and Zinc Conditioner or equivalant according to label directions.

(4) Rinse with clean water and blow off with compressed air.

### *Refinishing*

(1) Apply one light coat of Ditzco Zinc Dust Primer DPE 659 (Ditzler) and as soon as thinner flashes off and within 30 minutes, apply a coat of Duracryl Sealer (Ditzler) or equivelant.

(2) Apply Ditzler A-L-E Primer Surfacer (DZL-3200 Light Gray, DZL-3400 Dark Gray, DZL-7200 Red Oxide) or Ditzco Speed-Sand Synthetic Primer Surfacer (DPS-70 Red Oxide, or DPS-30 Gray) DuPont Hi-Speed Primer-Surfacer, Rinshed-Mason APS-403 Primer Surfacer Sealer or equivelant.

(3) Sand when dry and proceed with application of finish coats according to the paint manufacturers recommendations.

## RUST PROTECTION

Prior to applying any paint to the sheet metal, clean the entire area to be repainted with a good wax and grease remover. **Eliminate all fingerprints.** Chemically treat all bare metal using a good metal conditioner. This conditions the exposed metal to resist rust.

## BUFFING AND POLISHING

Minor imperfections in the paint finish normally can be removed by sanding, buffing and polishing. The following procedure should be used when working on these minor conditions:

(1) Oil sand by hand, the affected area using #600 paper which has been soaked in mineral spirits. Caution should be used not to rub too hard over any of the affected areas or on ridges.

(2) Tack off the area with a clean soft cloth.

(3) Buff the entire area using a fine buffing compound.

(4) Polish the area with a good wax polish.

## REFINISHING

### *Preparation Acrylic System Over Old Acrylic*

(1) Remove outside accessories, mouldings and

MyMopar.com

bumper face bars (if necessary).

(2) Remove silicone polish, wax, or any other surface contamination with wax and grease remover. A chemically clean surface allows for effective sanding and assures adhesion of the undercoats and finish color.

(3) Sand the old finish. This operation removes surface deterioration, feathers out scratches, nicks, stone bruises, or any other minor imperfections. Water sand with #360 grit paper or its equivalent.

(4) Blow off entire car, using high pressure air to eliminate dirt or dust from blowing out on to the surface as the paint is applied.

(5) Mask off the areas not to be painted. If a complete color change is being made, mask off interior parts adjacent to door openings to prevent paint spray from soiling interior trim and upholstering.

(6) Reclean entire area to be painted with wax and grease remover, eliminating workman's fingerprints.

(7) Chemically treat bare metal. This conditions exposed metal to inhibit rust. Use a good metal conditioner.

### *Priming the Surface*

This operation is the backbone or foundation for the finish color. It primes the metal to insure adhesion and fills minor surface imperfections. Use one of the recommended lacquer primer surfacers.

(8) Apply Undercoats.

(9) To expedite repairs of the other surface imperfections, use spot putty, glazing putty or all-purpose putty.

(10) Sand undercoats. Water sand with 400 or finer paper (or its equivalent if other sanding methods or systems are employed). This is the key operation in refinishing. The final finish will be as good as the foundation over which it is applied.

(11) Respray with primer surfacer any area that may have been sanded through to bare metal in step 10.

(12) Resand undercoat with 400 or finer paper.

(13) When the color is being changed, wash the door jambs and door opening areas. Spray interior.

(14) Remove overspray from exterior and reclean entire surface with wax and grease remover. This ensures positive adhesion.

(15) Tack rag the entire surface to remove lint and dust.

(16) Apply acrylic color. (Four to six double coats). Refinishing in the field must be done with acrylic. lacquer. The acrylic lacquer can then be polished to match original finish gloss. Care must be exercised when selecting paint for refinishing acrylic metallics, to select the proper paint code.

(17) When the color has dried hard, compound and polish.

## SPOT REPAIRS

The procedures for making spot repairs with acrylic lacquer are the same as for complete panel refinishing with the following exceptions:

### *Sealer Coats*

The use of a sealer is not practical where a spot repair is demanded, as it is difficult to spray sealer without leaving an edge. If care is taken in preparation of the surface, a satisfactory repair is possible by standing the original finish about 2 or 3 inches beyond the area where the acrylic lacquer will be applied. Apply the lacquer directly on the sanded original finish, being careful not to overlap the color on the unsanded enamel.

## APPLICATION OF COLOR COATS

Metallic color can appear to vary in richness. The variation can be described as:

A closed pattern that appears lighter with fine metallic dispersion.

An open pattern that appears richer with the metallic flakes less noticeable.

A closed pattern is best matched by reducing the DDL color 150% with DTL-135 Acrylic Thinner, or equivalent, adjusting the air pressure at the gun to 35 lbs. and applying medium wet coats.

An open pattern is achieved by lowering the air pressure to 20-30 lbs. **at the gun,** reducing the DDL color 100% with a blend of DTL-135 and DTX-1140 Retarder, or equivalent, and applying even wet coats. The blending of thinner and retarder can be varied in percentage as necessary depending on the room temperature.

### *Compounding Color Coats*

Compound the sanded area that extends around the refinish lacquer and then compound the lacquer, blending it into the enamel. **The hard surface of the acrylic enamel will permit compounding without leaving scratches.**

MyMopar.com

# AIR CONDITIONING

## CONTENTS


| | Page |
|---|---|
| AIR CONDITIONER DESCRIPTION—AND OPERATION | 1 |
| AIR CONDITIONER CONTROLS | |
| Fury | 1 |
| Valiant and Barracuda | 6 |
| AIR FLOW FOR EACH PUSH BUTTON POSITION | |
| Fury | 2 |
| Valiant and Barracuda | 7 |
| ELECTRICAL CONTROLS AND CIRCUITS | |
| Fury | 2 |
| Valiant and Barracuda | 7 |
| OPERATING INSTRUCTIONS FOR OWNERS | |
| Fury | 6 |
| Valiant and Barracuda | 7 |
| INSPECTION AND TEST PROCEDURES | 12 |
| OPERATION OF ALL CONTROLS | |
| Fury | 12 |
| Valiant and Barracuda | 13 |
| TEST PROCEDURES | |
| The Gauge Set Manifold and Installation | 14 |
| Test 1—System Pressure | 15 |
| Test 2—Refrigerant Level | 15 |
| Test 3—Testing System for Leaks | 17 |
| Test 4—Correcting Low Refrigerant Level | 19 |
| Test 5—Over-All Performance Test | 20 |
| Test 6—(EPR) Valve Test | 23 |
| Test 7—Compressor Capacity Test | 25 |
| Test 8—Expansion Valve Test | 27 |
| SERVICE PROCEDURES | |
| VACUUM CONTROL SYSTEM ADJUSTMENTS AND TESTS | |
| Fury | 32 |
| Valiant and Barracuda | 35 |
| MAGNETIC CLUTCH | 36 |
| SERVICING THE COMPRESSOR | 38 |
| EXPANSION VALVE | |
| Fury | 43 |
| Valiant and Barracuda | 46 |
| HEATER CORE | |
| Fury | 43 |
| Valiant and Barracuda | 47 |
| EVAPORATOR ASSEMBLY | |
| Fury | 45 |
| Valiant and Barracuda | 48 |
| BLOWER MOTOR AND DISTRIBUTOR DUCT | |
| Fury | 45 |
| Valiant and Barracuda | 49 |
| COMPLETE SYSTEM DISCHARGE AND RECHARGE | 50 |


## AIR CONDITIONER DESCRIPTION AND OPERATION

### AIR CONDITIONER CONTROLS

#### *Fury*

Two air conditioner options are available. The first option (Front Unit) is a combination air conditioning and heating unit which is installed inside the passenger compartment behind the instrument panel. The controls and cooling air outlets are integral with the instrument panel. This system functions on the reheat principle pioneered by the Chrysler Corporation and provides more effective cooling than comparable systems of past model years.

The second option (Station Wagons Only), includes the first option plus a roof mounted evaporator assembly.

The roof mounted unit operates automatically in conjunction with the front unit and is not available as a single unit without the front unit.

Controls for the front system consists of five push buttons, a temperature control slide lever and a three-position toggle-type fan blower switch (Fig. 1).

Control for the roof mounted system consists of a rotary two speed switch.

**Push Buttons**—Control the source and route of circulating air. "Off" (turns off system); "Max" (maximum air conditioning); "Fresh" (fresh air-air conditioning); "Heat" (for heater use only); "Def" (windshield defroster).

**Temperature Control Slide Lever**—Maintains any desired temperature by sliding the lever right or left

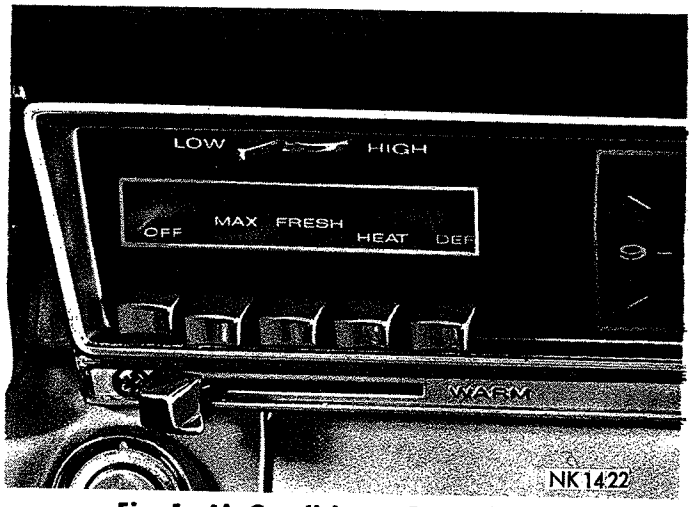


*Fig. 1—Air Conditioner Controls Fury*

MyMopar.com

when operating either the heater or air conditioner.

**Fan Switch**—Permits selection of low, medium or high blower speeds. "Low" (far left); "Medium" (center) and "High" (far right) used when operating either the heater or air conditioner.

**Air Directional Vanes**—One at each end, and two in the center of the instrument panel. These are adjusted manually to direct cool air to suit the requirements of the driver and passengers.

The center outlets are cylindrical units that can be rotated to direct air up or down; adjustable vanes direct air to either side.

The outlets at each end of the instrument panel are also adjustable or can be shut-off by a damper operated by a vertical slide lever or a horizontal slide lever depending on car model.

## AIR FLOW FOR EACH PUSH BUTTON POSITION

When testing or adjusting the doors in the distribution system, it is necessary to know the correct position of each door for each push-button position. It is also necessary to know which vacuum hoses are activated for each push-button position. In the following illustrations air flow is indicated as the vacuum actuator hoses are activated for each push-button position (Figs. 2 through 6).

### *Ventilation*

While driving, outside air can be brought into the interior through the inlets in the side cowls. These inlets are opened by pulling the control knobs, located on the lower edge of the instrument panel on both sides of the steering column. The knob to the left of the column controls the air inlet on the left side of the car and the right hand knob controls the right side. The amount of air intake is regulated by the distance the knobs are pulled out. Pushing the knobs all the way in closes off the air intake.

**Be sure the air intake controls are pushed all the way in before operating the air conditioning system.**

## ELECTRICAL CONTROLS AND CIRCUITS

There are three switches, push button switch (air conditioner and heater vacuum switch), fan switch (air conditioner and heater blower switch), and the air conditioner and heater resistor by-pass switch.

### *Push Button Control*

The power feed circuit is shown in Figure 7. A 20 ampere fuse in the fuse block protects the circuit.

The compressor clutch circuit is energized when either the "Max," (maximum air conditioning) or the "Fresh," (fresh air—air conditioning) push buttons are depressed. The "OFF" button turns off the system.

### *Blower Motor (Fan Switch)*

The power feed line from the push-button switch to the blower switch is energized only when the ignition is on and any push button, other than "Off," is depressed.

The switch is controlled by moving the control

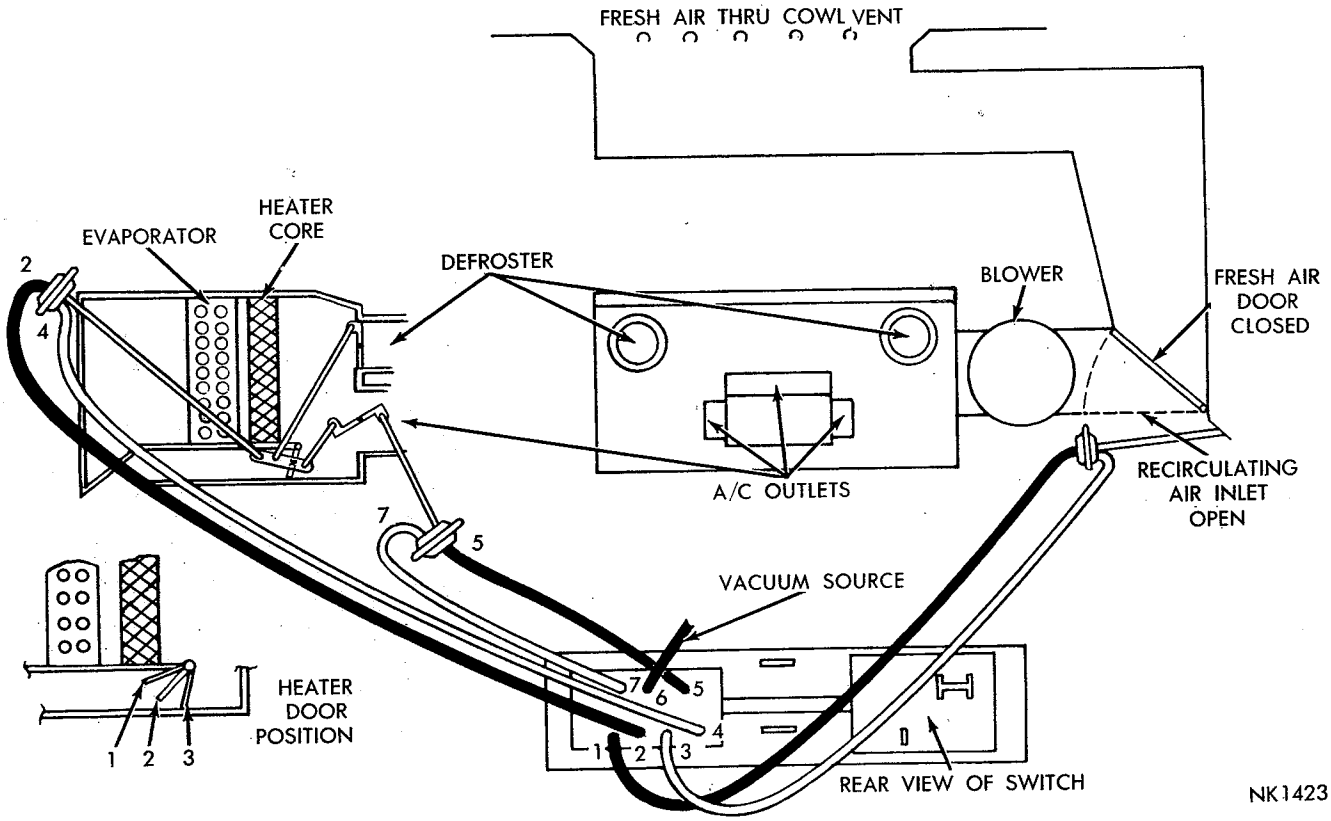


*Fig. 2—Air Conditioning Controls Off Position*

MyMopar.com

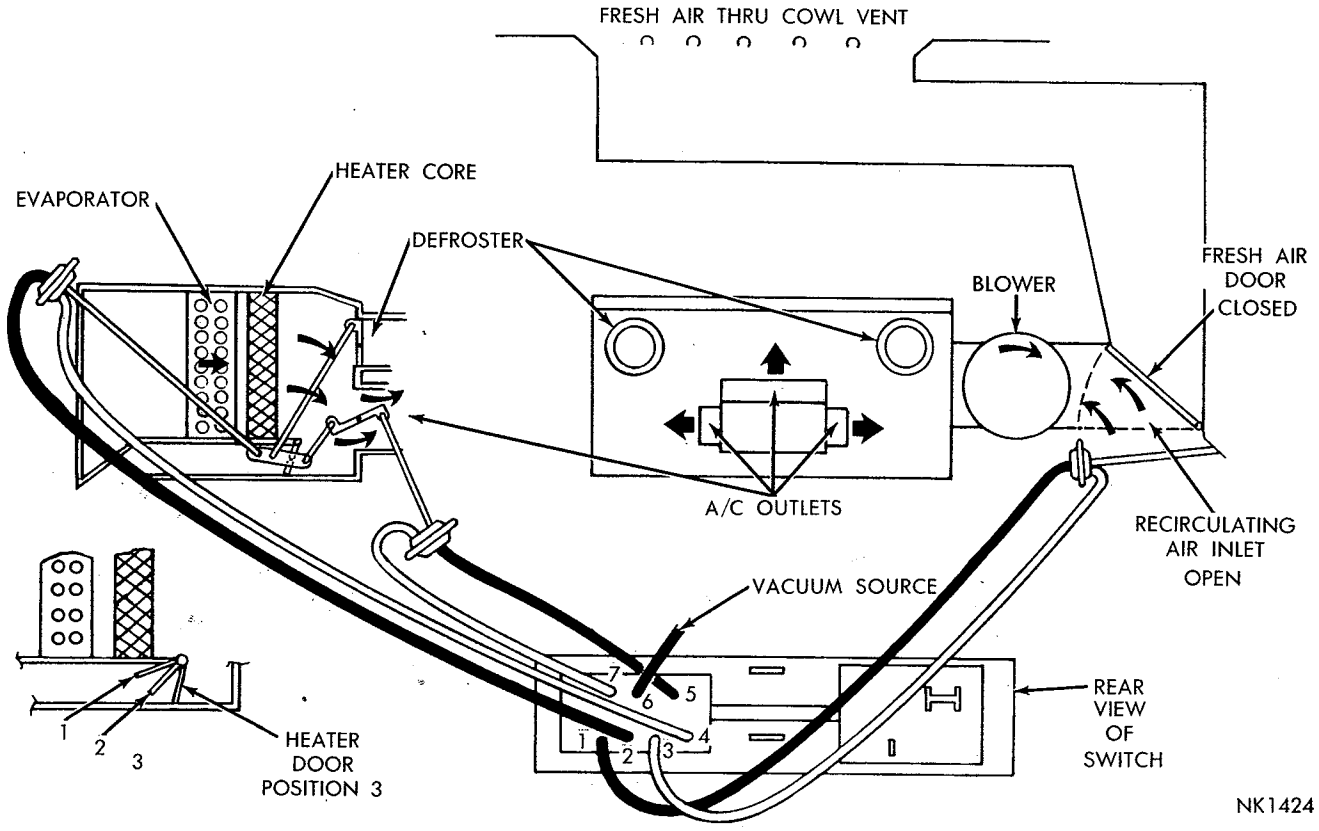


***Fig. 3—Air Flow—Maximum Cooling***

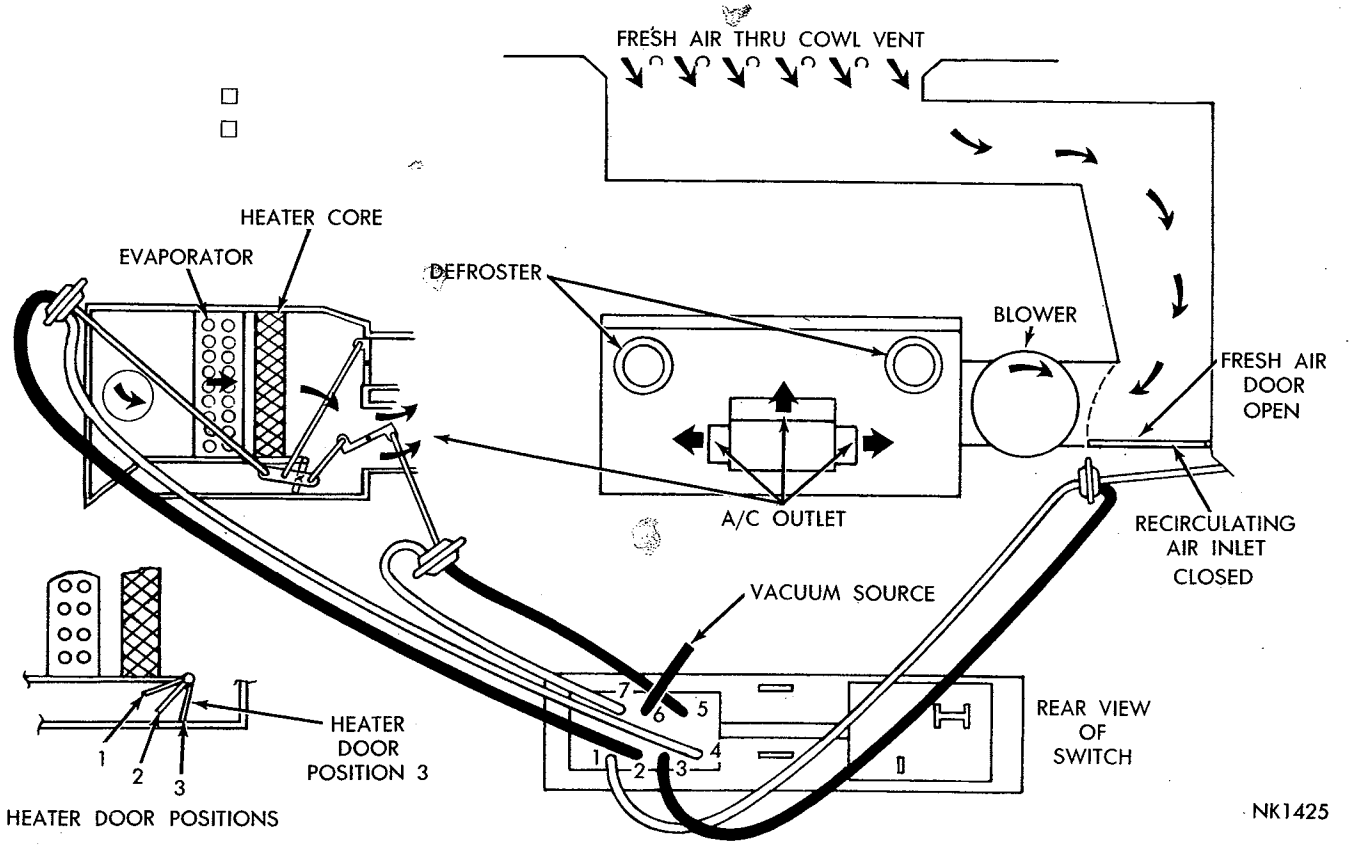


***Fig. 4—Air Flow—Fresh Air Cooling***

MyMopar.com

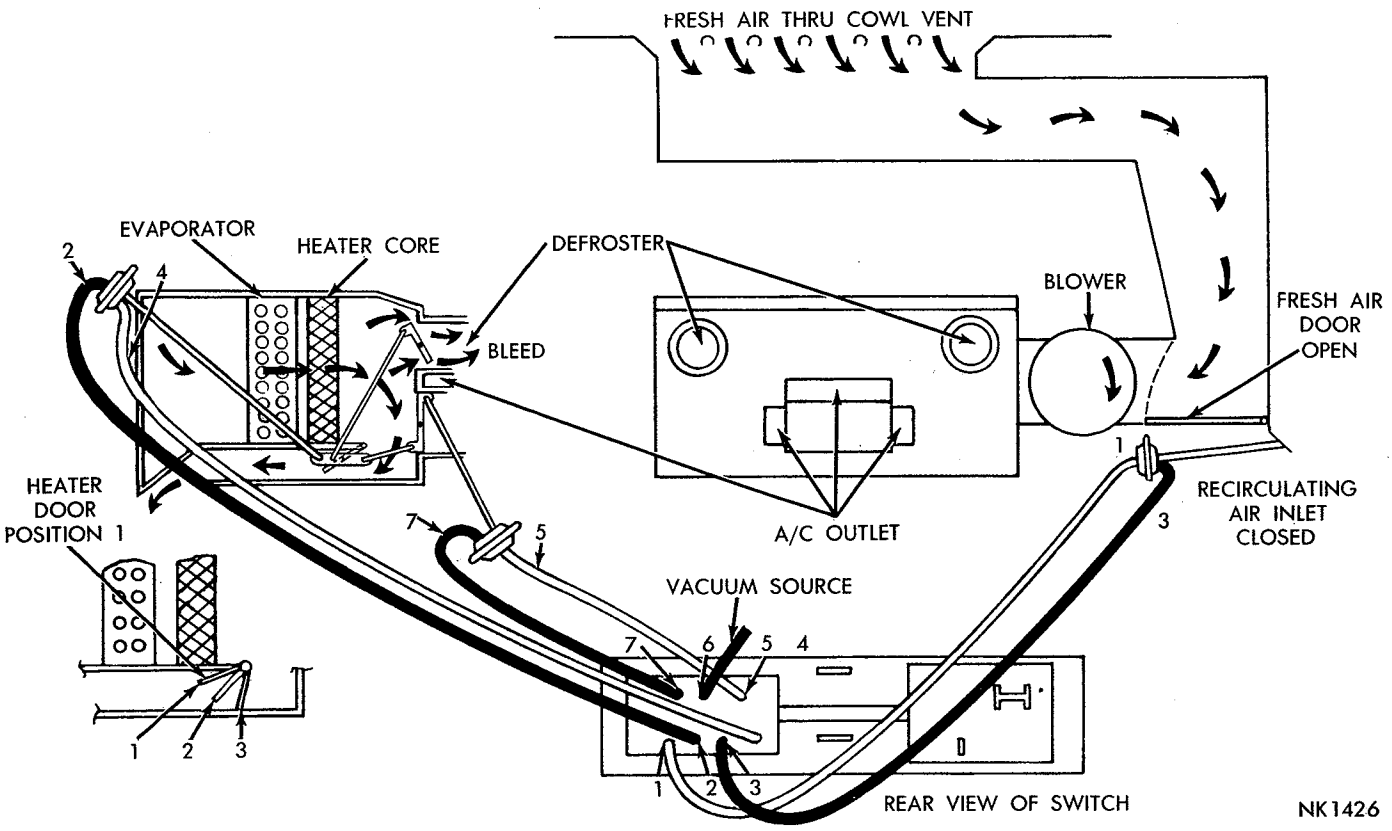


***Fig. 5—Air Flow—Heating***

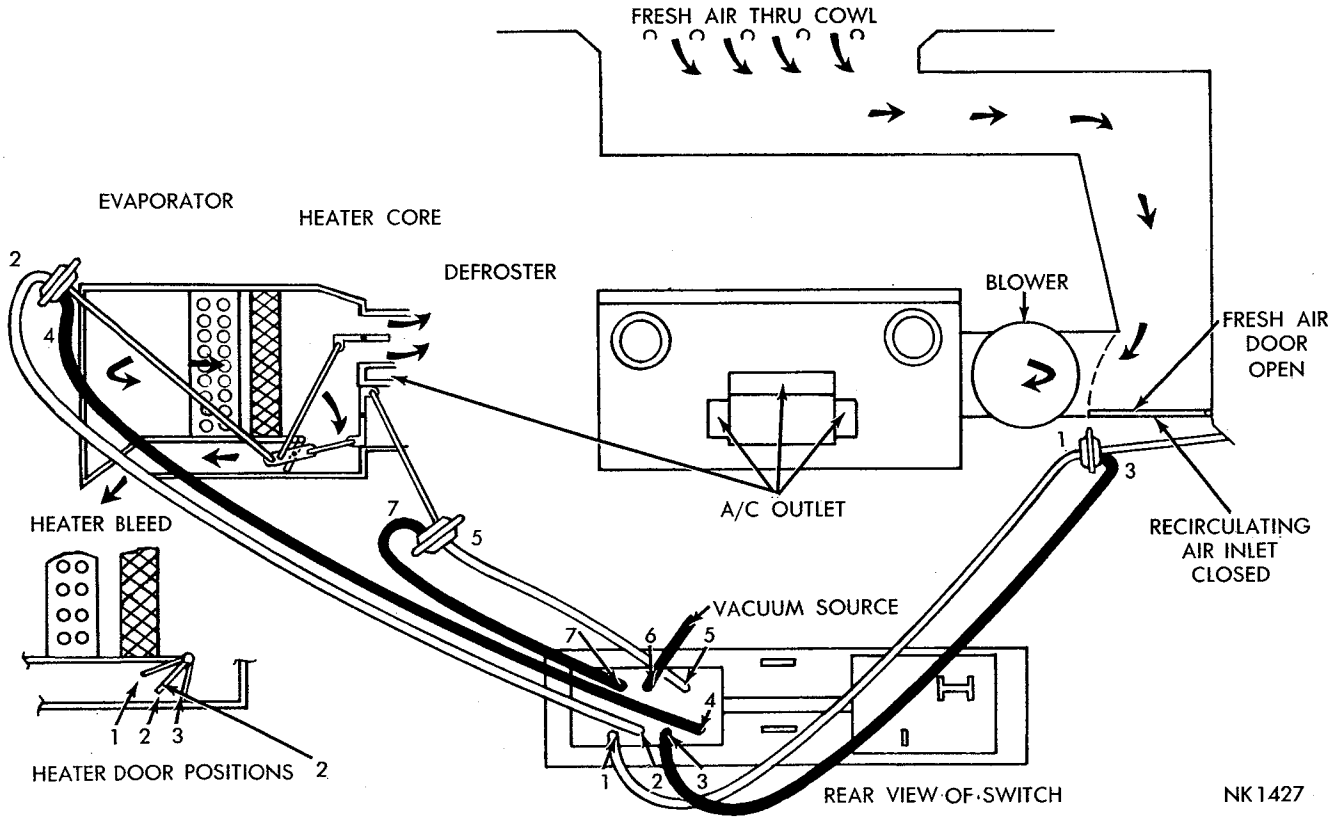


***Fig. 6—Air Flow—Defrosting***

MyMopar.com

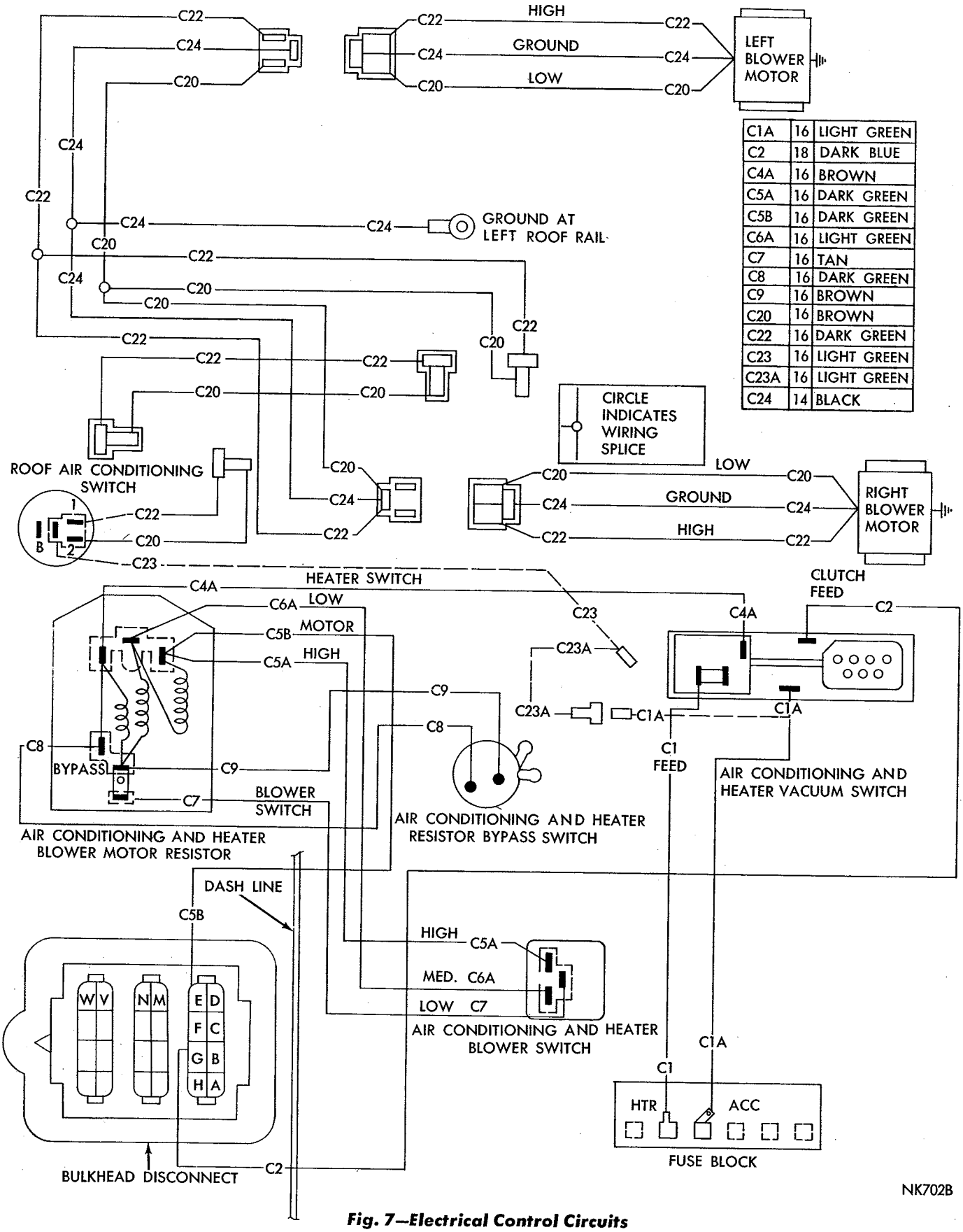


***Fig. 7—Electrical Control Circuits***

MyMopar.com

lever from left (low) to right (high).

## OPERATING INSTRUCTIONS FOR OWNERS

### Fast Cool Down

If the car has been parked in the hot sun, open the windows and drive the car for several minutes to expel the warm air, and at the same time:

(1) Slide the temperature control lever to the "Off" position (far left).

(2) Push the "Max" button.

(3) Move the fan switch to "High" (Hi) far right.

(4) Adjust the four cooling outlet vanes to direct cooled air to the desired area to suit occupants wishes.

### Normal Cooling (Cooling with Fresh Air)

When the desired amount of cooling is obtained with the "Max" button, you can continue cooling with fresh outside air for added comfort by pushing the "Fresh" button and adjusting the fan switch to change fan blower speed. If less cooling is desired, move the fan switch lever to "Low" speed and readjust the cooling outlets for indirect cooling. For warmer air, move the temperature control lever to the right to the desired temperature.

### Cooling For Special Conditions

The air conditioner provides maximum dehumidified air at the most comfortable weather conditions above 50°F.

During rainy or muggy weather, operate the system as usual, using the temperature control lever to clear the windows and provide interior comfort.

If the outside air is extremely humid or too warm for cooling with fresh air as previously described, push the "Max" button.

This method is also recommended when driving through areas which are extremely dusty or have objectionable odors.

### Operation In Traffic

(1) In extremely slow traffic, 10 to 15 miles per hour, additional cooling can be obtained by operating the transmission in the lowest range.

(2) For moderate traffic operation 20 to 30 miles per hour, operate the transmission in the intermediate range.

(3) At stop lights and other stops of some duration, place the transmission in neutral and increase the engine speed with the foot accelerator.

(4) At higher speeds, operate the transmission in the "D" (Drive) range.

(5) When hauling a trailer and with air conditioning system in operation, it may be necessary to turn air conditioner "Off" for awhile when overheating conditions are encountered. Also, driving at reduced highway speeds will help engine to run cooler.

### Off-Season Operation

During the off-cooling season, suggest to the owners that they operate the air-conditioning system for at least five minutes once a week with the "Max" button depressed and the temperature control lever in the warm position. This will cause the air conditioner compressor to pump oil to the compressor seal, preventing the seal from drying out and causing loss of refrigerant.

### AntiFreeze Required for Summer Operation

Air conditioned cars must be protected with a permanent type antifreeze during summer to +15°F. or lower to prevent the heater case from freezing. However, this protection does not provide sufficient corrosion inhibitors for the engine cooling system.

Summer protection to —15°F will provide adequate inhibitors for protection of engine cooling system against corrosion. **Do not use the same antifreeze for more than one year.**

### Bugs Screens

Bug screens should not be installed on vehicles equipped with air conditioner. A bug screen installed in front of the condenser will reduce air flow and effect air conditioner performance. Under severe heat conditions a bug screen may cause the engine to over-heat.

## AIR CONDITIONER CONTROLS

### (Valiant and Barracuda)

The air conditioner combines both heating and cooling in one system and also provides fresh air cooling. Controls and cooling air outlets are integral with the instrument panel (Fig. 8).

Three cooling air outlets are contained in one unit secured to the lower edge of the instrument panel. Each outlet can be adjusted independently to direct air up, down, or to either side. Two fixed outlets in the heater unit installed behind the instrument panel direct cooling air to the floor.

Controls for the system consists of five push buttons, a temperature control slide lever and a fan blower switch.

**Push Buttons**—Control the source and route of circulating air. "Off" (turns off the entire system); "Max A/C" (maximum air conditioning); "A/C" (fresh air air conditioning); "Heat" (for heater use only); "Def" (windshield defrosting).

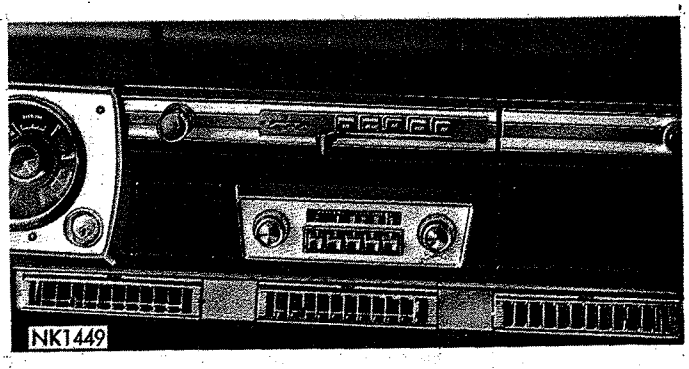


*Fig. 8—Air Conditioner Controls (Valiant and Barracuda)*

MyMopar.com

**Temperature Control Slide Lever**—Maintains any desired temperature by sliding the lever right or left when operating either the heater or air conditioner and controls the automatic cycling of the refrigeration system.

**Fan Switch**—Permits selection of "Low," "Medium" or "High" blower speed. "Low" (far left), "Medium" (center) and "High" (far right) used when operating either the heater or the air conditioner.

**Air Directional Vanes**—Located on the lower edge of the instrument panel. These are manually adjusted up, down, or to either side to deflect cool air to suit requirements of driver and passengers.

## AIR FLOW FOR EACH PUSH BUTTON POSITION (Figs. 9 thru 15)

When testing or adjusting the doors in the distribution system, it is necessary to know the correct position of each door for each push-button position. In the illustrations which follow; air flow is indicated, also which vacuum actuator hoses are activated for each push-button position.

**Warm Weather Ventilation**—Two "summer" doors are provided, one below each end of the instrument panel. These doors can be opened manually for fresh air ventilation during warm weather.

**Before using the air conditioner be sure both ventilation doors are closed and latched.**

## ELECTRICAL CONTROLS AND CIRCUITS

The system is controlled by the following switches:

(a) Push button switch (air conditioner and heater vacuum switch).

(b) Fan switch (air conditioner and heater blower switch).

(c) Temperature control switch (temperature control slide lever).

(d) Air conditioner and heater resistor by-pass switch).

### *Push Button Control*

The power feed circuit is shown in Figure 16. A 20 ampere fuse in the fuse block protects the circuit.

The compressor clutch circuit is energized when either the "Max A/C," (maximum air conditioning) or the "A/C" (fresh air-air conditioning) push buttons are depressed. The "Off" button turns off the system.

### *Blower Motor (Fan Switch)*

The power feed line from the push-button switch to the blower switch is energized only when the ignition is on and any push button, other than "Off," is depressed.

The fan switch and control circuits are functionally the same for all "A" body factory installations, and the switch is controlled by moving the control lever from left "Low" to right "High."

### *Temperature Control Switch*

The temperature control switch controls the temperature of the evaporator by automatically cycling the refrigeration system to control the setting of the position of the temperature control lever.

### *By-Pass Switch*

The by-pass switch increases the blower speed when the "Max A/C" or "Fresh Cool" button is pushed.

## OPERATING INSTRUCTIONS FOR OWNERS

### *Fast Cool-Down*

(1) Make sure the "summer" doors, located under each end of the instrument panel, are closed and latched. If the vehicle has been parked in the hot sun, open the windows.

(2) Slide temperature control lever to "Off" (far left).

(3) Depress push button marked "Max A/C."

(4) Slide fan switch to "High" (far right).

(5) Adjust the air directional vanes to direct cooled air to the desired area to suit occupants' wishes.

(6) Drive vehicle for a couple of minutes to expel warm air; then, close all windows. If less cooling is desired, press button marked "A/C" and readjust fan switch to occupants' comfort.

### *Normal Cooling (Cooling with Fresh Air)*

When the desired amount of cooling is obtained with "Max A/C," you can continue cooling with fresh outside air for added comfort by pushing the "A/C" button and adjusting the fan switch to suit occupants' requirements. If less cooling is desired move the fan switch to "Low" and readjust the air directional vanes (up) for indirect cooling. For warmer air move the temperature control lever to the right.

### *Cooling for Special Conditions*

Your air conditioner provides maximum dehumidifier air at the most comfortable weather conditions above 50°F. During rainy or extremely humid weather, operate the system as usual, using the temperature control lever to clear the windows and provide interior comfort. If the outside air is extremely humid or too warm for fresh air cooling, push the "Max A/C" button. This is also recommended when driving through areas which are extremely dusty or have objectionable odors.

### *Operation in Traffic*

(1) If **extremely slow traffic** is encountered, 10 to 15 miles per hour, additional cooling can be obtained by operating the transmission in the lowest range.

(2) For **moderate traffic operation,** 20 to 30 miles per hour, operate transmission in intermediate range.

(3) At **higher speeds,** shift transmission to drive (direct).

(4) At **stop lights** and other stops of some duration,

MyMopar.com

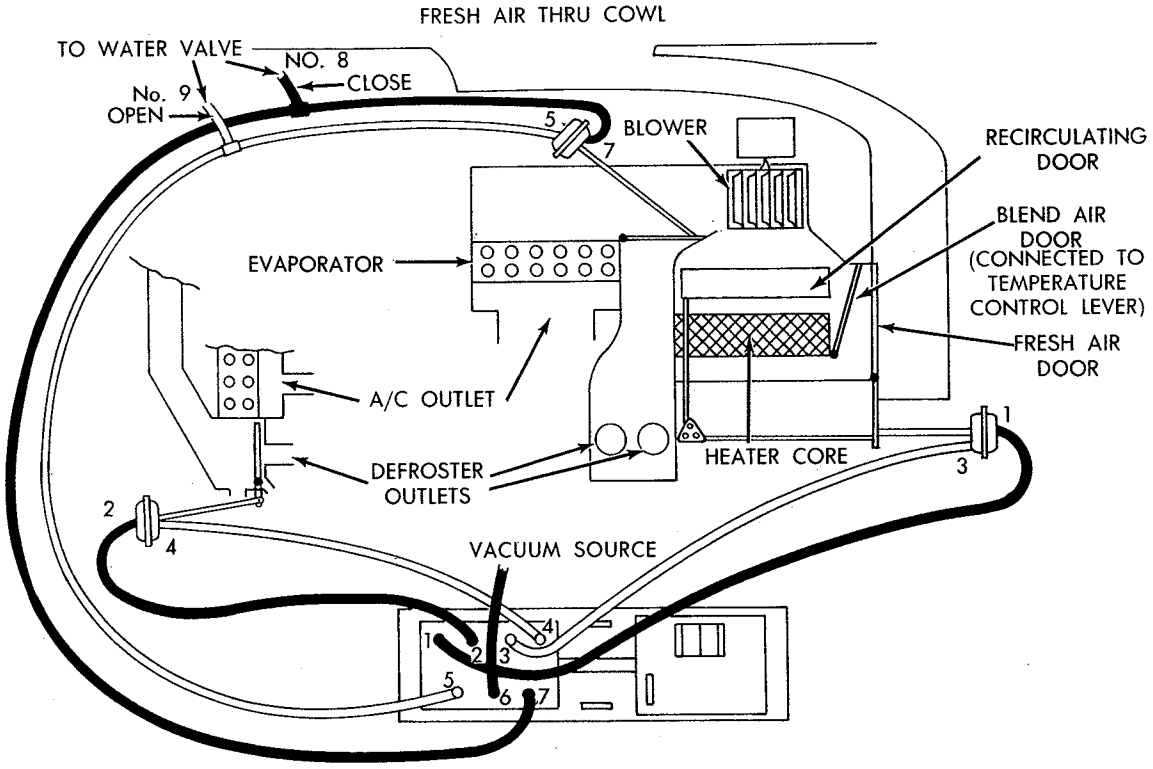


NK1432A

***Fig. 9—Air Flow—Off Position***

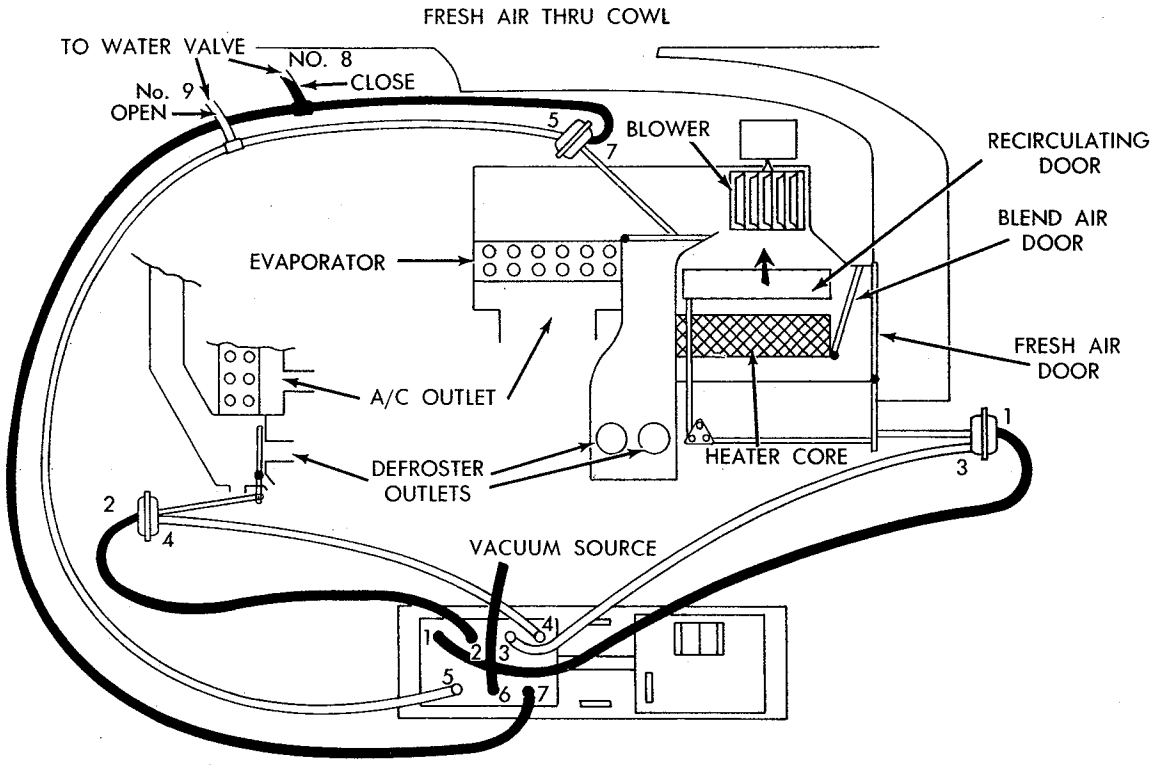


NK1433A

***Fig. 10—Air Flow—Max. A/C Position***

MyMopar.com

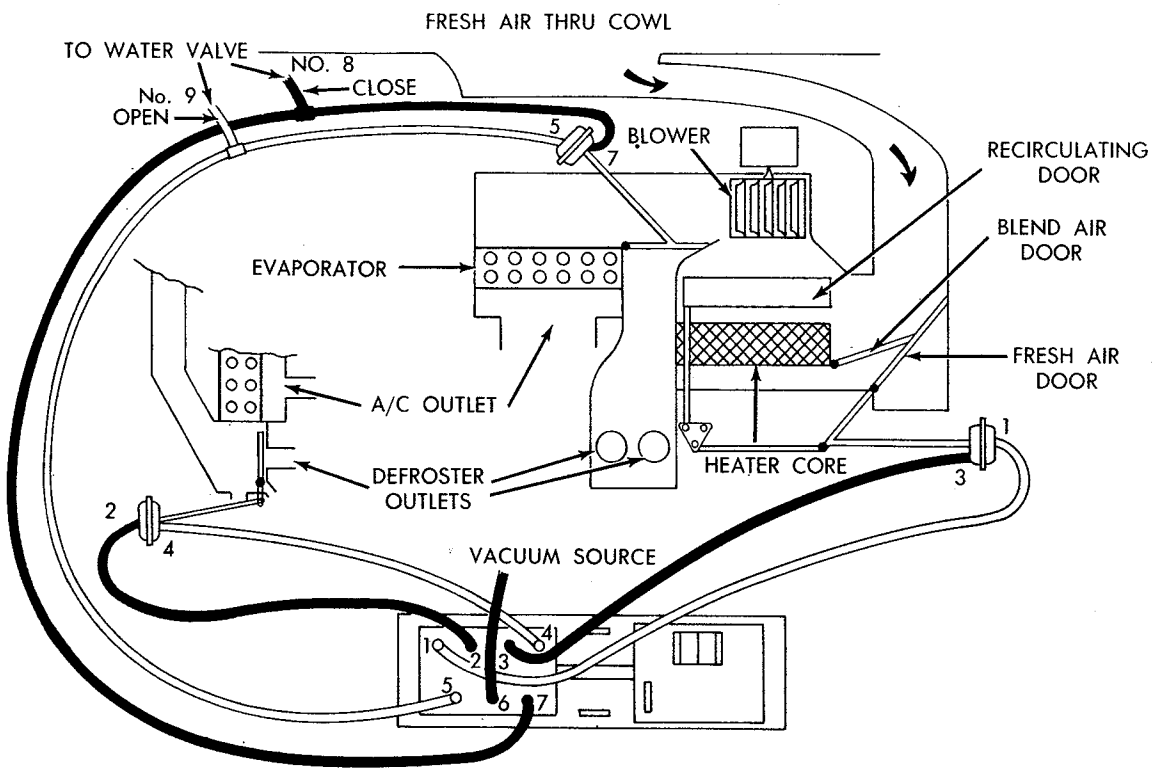


***Fig. 11—Air Flow—A/C Position***

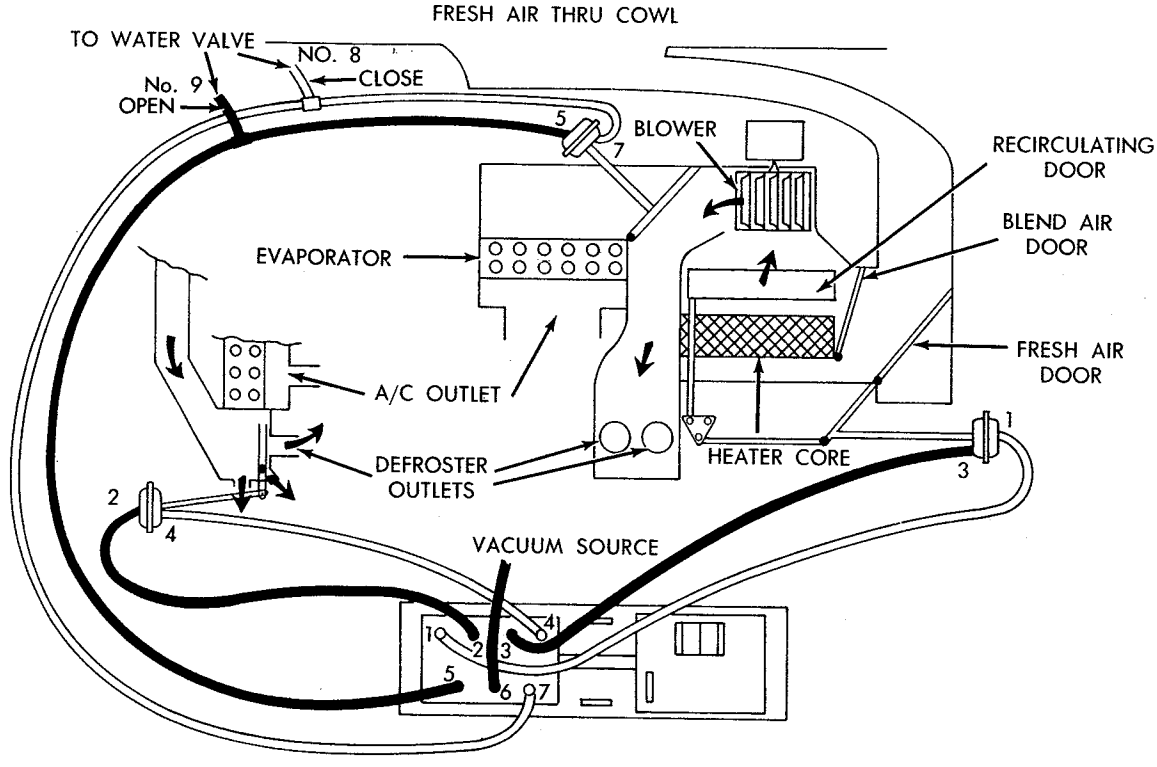


***Fig. 12—Air Flow—Heat Position***

MyMopar.com

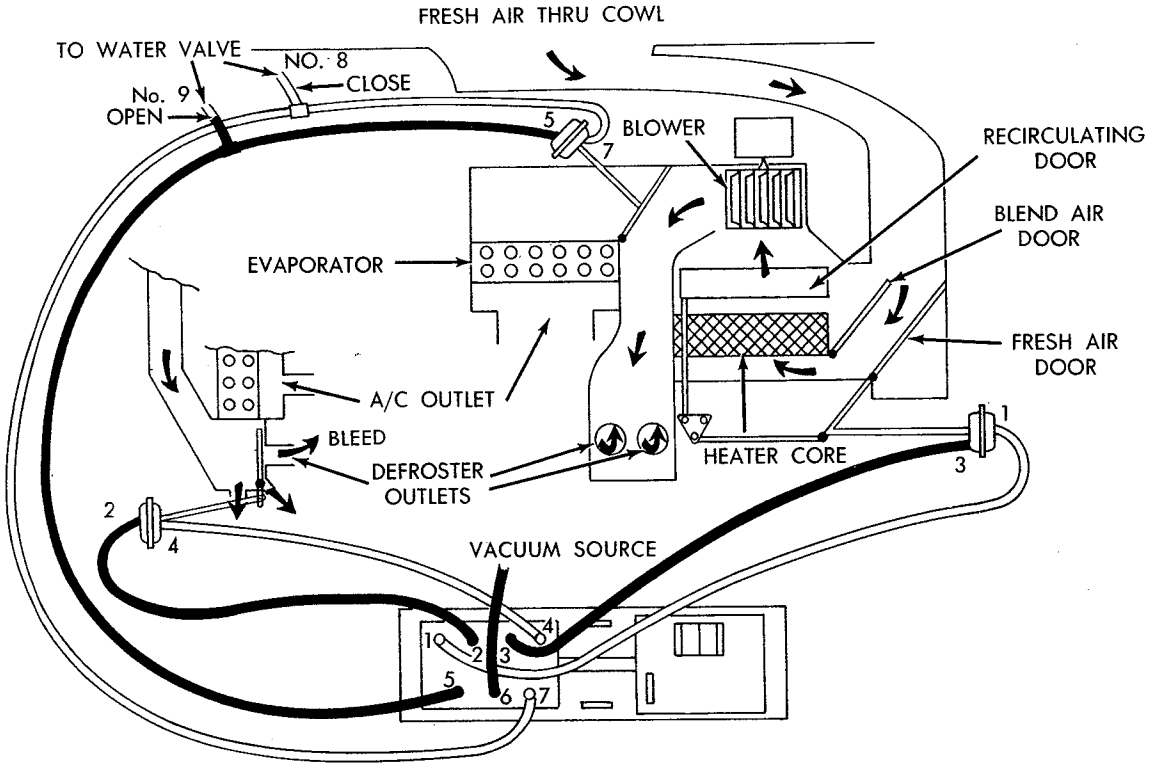


***Fig. 13—Air Flow—Heat Position Blend Door Half Open***

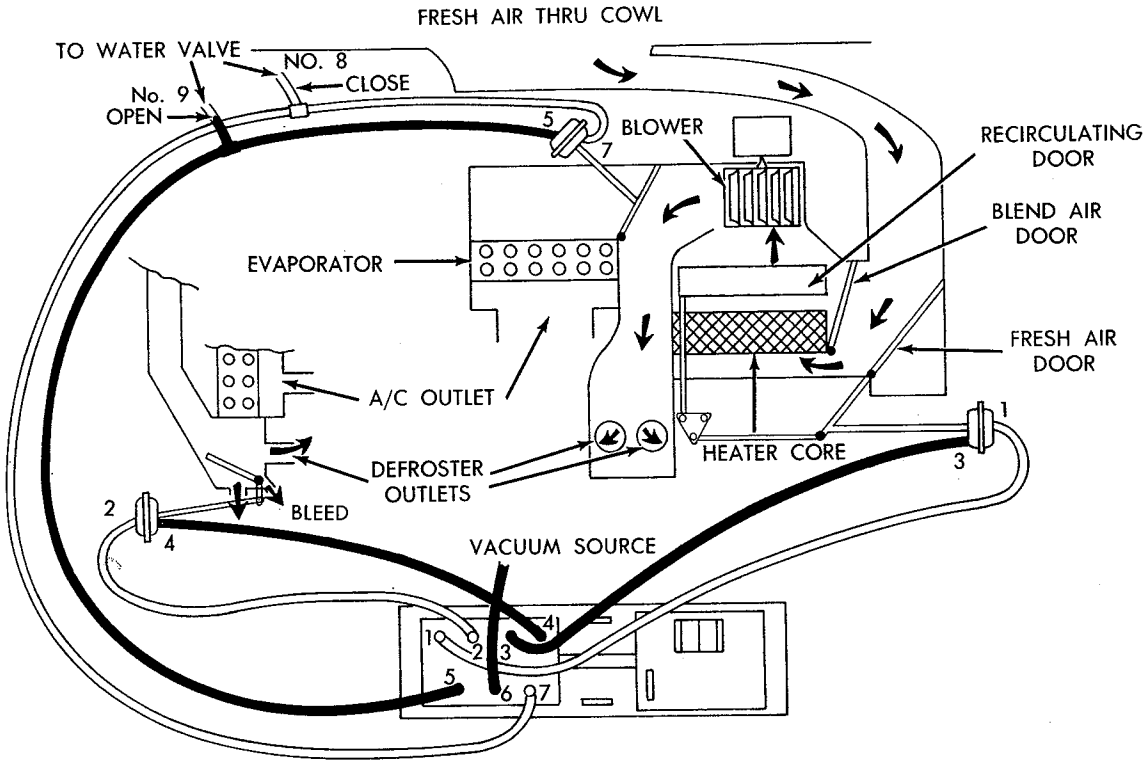


***Fig. 14—Air Flow—Defrost Position***

MyMopar.com

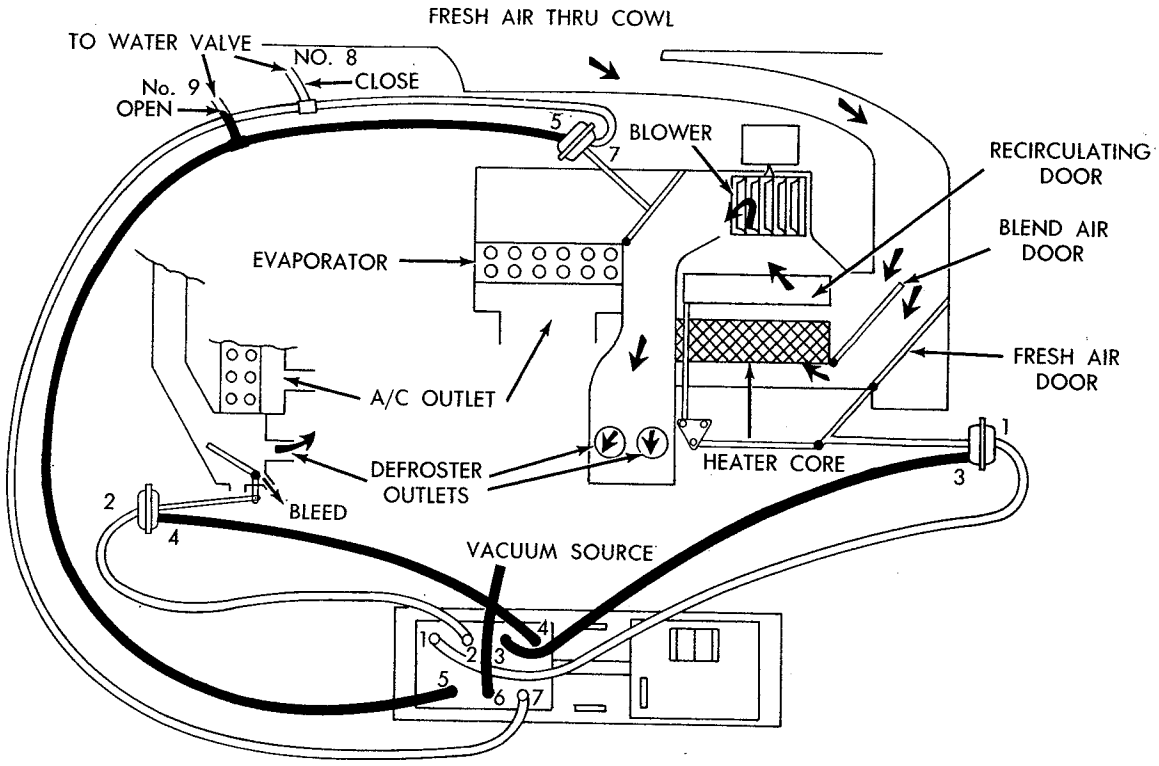


**Fig. 15—Air Flow—Defrost Position Blend Door Half Open**

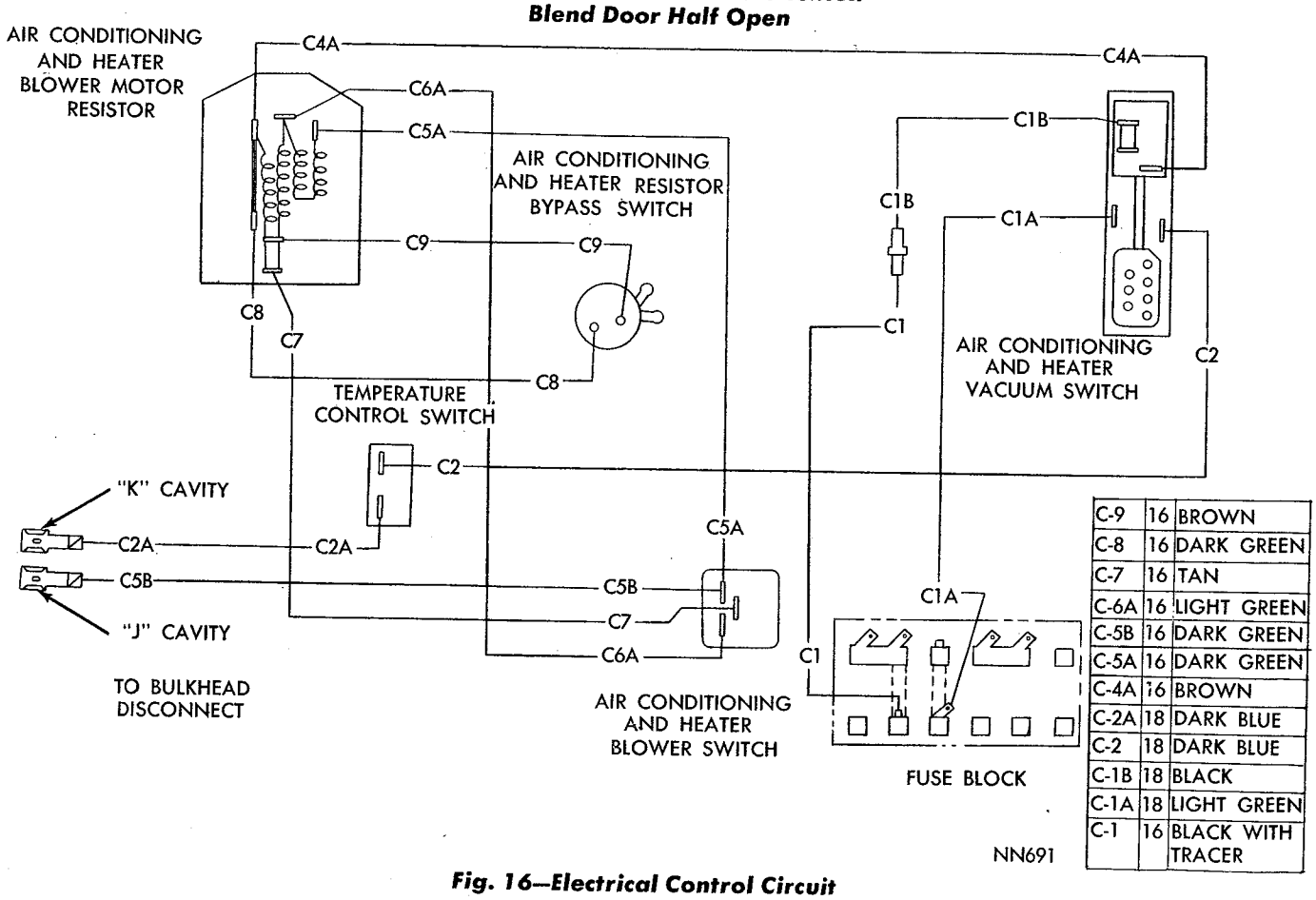


| | | |
|---|---|---|
| C-9 | 16 | BROWN |
| C-8 | 16 | DARK GREEN |
| C-7 | 16 | TAN |
| C-6A | 16 | LIGHT GREEN |
| C-5B | 16 | DARK GREEN |
| C-5A | 16 | DARK GREEN |
| C-4A | 16 | BROWN |
| C-2A | 18 | DARK BLUE |
| C-2 | 18 | DARK BLUE |
| C-1B | 18 | BLACK |
| C-1A | 18 | LIGHT GREEN |
| C-1 | 16 | BLACK WITH TRACER |

**Fig. 16—Electrical Control Circuit**

MyMopar.com

shift the transmission to neutral and increase engine speed with the foot accelerator.

(5) When hauling a trailer and with the air conditioning system in operation, it may be necessary to turn the air conditioner "Off" for awhile when overheating conditions are encountered. Also, driving at reduced highway speeds will help the engine to run cooler.

(6) When driving, it is normal to hear the air conditioner clutch engage and disengage, and experience minor variations in car speed.

### Off-Season Operation

During the off-cooling season, suggest to the owners that they operate the air-conditioning system for at least five minutes once a week with the "Max A/C," "Max" or "Max Cool" button depressed and the temperature control lever in the warm position. This will cause the air-conditioner compressor to pump oil to the compressor seal, preventing the seal from drying out and causing loss of refrigerant.

### Bugs Screens

Bug screens should not be installed on vehicles equipped with air conditioner. A bug screen installed in front of the condenser will reduce air flow and affect air conditioner performance. Under severe heat conditions a bug screen may cause the engine to overheat.

## INSPECTION AND TEST PROCEDURES

Satisfactory performance of the combined air-conditioning and heating system is dependent upon proper operation and adjustment of all operating controls, as well as proper functioning of all refrigeration system units. The inspections, tests and adjustments should be used to locate the cause of a malfunction. The inspections and tests in this manual have been arranged in a logical sequence that has proved to be the surest and shortest route to accurate diagnosis. It is recommended that they be followed and performed in the order in which they are presented.

## OPERATION OF ALL CONTROLS

### Fury

Operating controls must be tested in the following sequence. Remove radiator cap.

(1) Inspect and adjust compressor drive belt.

(2) Open vehicle windows.

(3) Move temperature control slide lever to "Off" position.

(4) Start engine and adjust engine speed to 1600 rpm for 6 cylinder engines and 1130 rpm for 8 cylinder engines. Use a reliable tachometer.

(5) Push the "Fresh" button in.

(6) Fresh-recirculating door should be open to fresh air.

(7) Test the blower operation at all three speed positions. If the blower does not operate correctly, refer to "Electrical Controls and Circuits." Leave the blower switch in the "Low" position.

(8) The compressor clutch should be engaged, the compressor operating, and the air conditioning system in operation. If the clutch does not engage, test the circuit as outlined under "Electrical Controls and Circuits."

### Push Button Operation

Reduce the engine speed to normal idle. With the engine operating at idle speed, the vacuum will be high and the vacuum actuators should operate quickly.

If the actuator operation is slow, check the source hose connection at the engine manifold.

Push each button to test the over-all operation of the electrical and vacuum controls.

The "Push Button Control Chart" summarizes the actions that should take place when each button is pushed. See "Chart." Also refer to "Air Flow for Each Push Button Position."

If all the controls operate in the proper sequence but the action of the dampers and doors is slow or incomplete, inspect for mechanical misalignment, binding or improper linkage adjustment.

### Water Temperature Control Valve Adjustment

Remove the radiator cap to minimize pressure in the car's cooling system.

Move the temperature control slide lever on the instrument panel to the extreme "Warm" position, and then back to the "Off" position.

Push the "Max" button in ,and with the blower in the "Low" position, run the air conditioning system for five minutes, then test the water valve by momentarily disconnecting the heater outlet hose at the upper side of the heater.

If the temperature control valve does not close completely, reposition the control cable housing in the retaining clip so that the valve does close completely. If the valve cannot be closed completely by adjustment, replace the water valve and retest the adjustment.

## RADIATOR CAP

The 1966 air conditioned vehicles must be equipped with a radiator cap having a holding pressure of 15 to 16 psi. Replace the radiator cap that does not test within these specification's with a cap that does.

MyMopar.com

## PUSH BUTTON CONTROL CHART

| BUTTON | OFF | MAX. | FRESH | HEAT | DEFROST |
|---|---|---|---|---|---|
| Fresh Air Door | Closed | Closed | Open | Open | Open |
| Recirculating Door | Open | Open | Closed | Closed | Closed |
| Air Conditioning Door | Open | Open | Open | Closed | Closed |
| Heater Door | Closed | Closed | Closed | Open | Closed with Air Bleed |
| Defroster Doors | Closed | Closed | Closed | Closed with Air Bleed | Open |
| Blower Speed | Off | Hi.-Med. Low | Hi.-Med. Low | Hi.-Med. Low | Hi. Med. Low |
| Compressor Clutch | Off | On | On | Off | Off |

## CONDENSER

Inspect the condensor for obstructions for foreign matter. Clean if necessary.

Any obstructions to the free flow of air across the condenser will decrease heat dissipation from the condenser, decrease the efficiency of the condenser and, in turn, decrease the evaporator's efficiency. These conditions result in increasing the discharge pressure and horsepower load on the engine. The use of a bug screen is not recommended as it, too, will decrease the free flow of air.

Inspect the condenser for bent or damaged fins. The bent fins on the condenser deflect air flow across the bent portions, decreasing the condenser area.

## OPERATION OF ALL CONTROLS

***(Valiant and Barracuda)***

Operating must be tested as described in the following sequence:

(1) Inspect, test, and adjust compressor drive belt.

(2) Remove radiator pressure cap.

(3) Start engine and adjust engine speed to 1600 rpm for 6 cylinder and 1300 rpm for 8 cylinder engines. Use a reliable tachometer.

(4) Move temperature control lever to "Off" position and push the "Fresh Cool" button.

(5) The fresh air door should be open to fresh air. Open vehicle windows.

(6) Test the blower operation at all three speed positions. If the blower does not operate correctly, refer to "Electrical Controls and Circuit." Leave the

## PUSH BUTTON CONTROL CHART

| BUTTON | OFF | MAX. COOL | FRESH COOL | HEAT | DEFROST |
|---|---|---|---|---|---|
| Fresh Air Door | Closed | Closed | Open | Open | Open |
| Recirculating Door | Open | Open | Closed | Closed | Closed |
| Inlet Door | Open | Open | Open | Closed | Closed |
| Water Valve | Closed | Closed | Closed | Open | Open |
| Defroster Door | Closed | Closed | Closed | Closed with Air Bleed | Open |
| Heater Door | Open | Open | Open | Open | Closed with Air Bleed |
| Blower Speed | Off | Hi.-Med. Low | Hi.-Med. Low | Hi.-Med. Low | Hi.-Med. Low |
| Compressor Clutch | Off | On | On | Off | Off |

MyMopar.com

blower switch in the "High" (Hi) position.

(7) The compressor should be running and the air conditioning system in operation.

### *Push Button Operation*

Reduce engine speed to normal idle. With engine operating at idle speed, vacuum will be high and vacuum actuators should operate quickly.

If actuator operation is slow, check the source hose connection at engine manifold.

Push each button to test over-all operation of the electrical and vacuum controls.

The "Push Button Control Chart" summarizes the actions that should take place when each button is pushed. See "Chart." Also, refer to "Air Flow for Each Push Button Position."

If all the controls operate in the proper sequence but the action of the dampers and doors is slow or incomplete, inspect for mechanical misalignment, binding or improper linkage adjustment.

### *Water Temperature Control Valve Test*

Remove radiator cap to minimize pressure in the vehicle's cooling system.

Move temperature control slide lever on the instrument panel to the extreme "Warm" position, and then back to "Off" position.

With the "Heat" or "Defrost" button pushed in, test water valve by momentarily disconnecting heater outlet hose. A slight spillage of water when the hose is removed is normal. A continuous flow of water indicates that the valve is not closing properly or the vacuum hoses are not properly connected.

If the temperature control valve does not close completely, replace the valve.

## RADIATOR CAP

The 1966 air conditioned vehicles must be equipped with a radiator cap having a holding pressure of 15 to 16 psi. Replace the radiator cap that does not test within these specifications with a cap that does.

## CONDENSER

Inspect the condenser fins for obstructions for foreign matter. Clean if necessary.

Any obstructions to the free flow of air across the condenser will decrease heat dissipation from the condenser, decrease the efficiency of the condenser and, in turn, decrease the vaporator's efficiency. These conditions result in increasing the discharge pressure and horsepower load on the engine. The use of a bug screen is not recommended as it, too, will decrease the free flow of air.

Inspect the condenser for bent or damaged fins. The bent fins on the condenser deflect air flow acros the bent portions, decreasing the condenser area.

# TEST PROCEDURES

## THE GAUGE SET MANIFOLD AND INSTALLATION

The Gauge Set Manifold is an indispensable test and diagnosis instrument. The gauge set manifold Tool C-3740 has two compound suction gauges and one discharge pressure gauge. Two accurately calibrated suction pressure gauges are required for the evaporator pressure regulator valve test. Refer to Figs. 17 and 18.

**The hoses are shown in the test illustrations for quick reference to distinguish the various adaptations.**

**Evaporator Suction Gauge**—at the left side of the manifold set is calibrated to register 0 to 30 inches of vacuum and 0 to 150 psi. This gauge is connected to the suction service port of the compressor, on "Fury," installations. On Valiant and "Barracuda," installations this gauge is connected to the compressor inlet service port. A special service port adapter, supplied with the gauge set, provides the means of connecting the gauge set manifold hose to the service port. When the adapter is installed at the port and tightened, the stem of the valve in the service port is depressed, opening the service port valve.

**Discharge Pressure Gauge**—at the center of the manifold set is calibrated to register 0 to 300 psi. For all tests this gauge is connected to the discharge service port of the compressor. A service port adapter is used to make this connection. The needle valve, located below the discharge pressure gauge, is used to damp out gauge needle oscillations so that accurate readings can be obtained.

**Compressor Inlet Gauge**—is mounted at the right side of the manifold set. This mounting is for convenience only. There are no passages between this gauge and the gauge manifold. The compressor inlet gauge is calibrated to register 0 to 30″ of vacuum and 0 to 150 psi. This gauge and the evaporator suction gauge must be accurately calibrated so that the needles of both gauges are exactly at 0 before making tests. The compressor inlet gauge is connected to the compressor inlet service port by a special service port adapter.

**This gauge is used, when checking the EPR Valve** on "Fury" installations and is not used on Valiant and Barracuda installations (Fig. 18).

**Center Manifold Outlet**—provides the necessary connection for a long service hose used when discharging the system, using a vacuum pump to "pull a vacuum" before charging the system, and for connecting the supply of refrigerant when charging the system. When performing the Compressor Capacity Test, TEST 7, the hose is removed and a special test cap is installed in its place.

**Manifold Gauge Valves**—should be closed wher connecting the gauge set manifold to the service port:

MyMopar.com

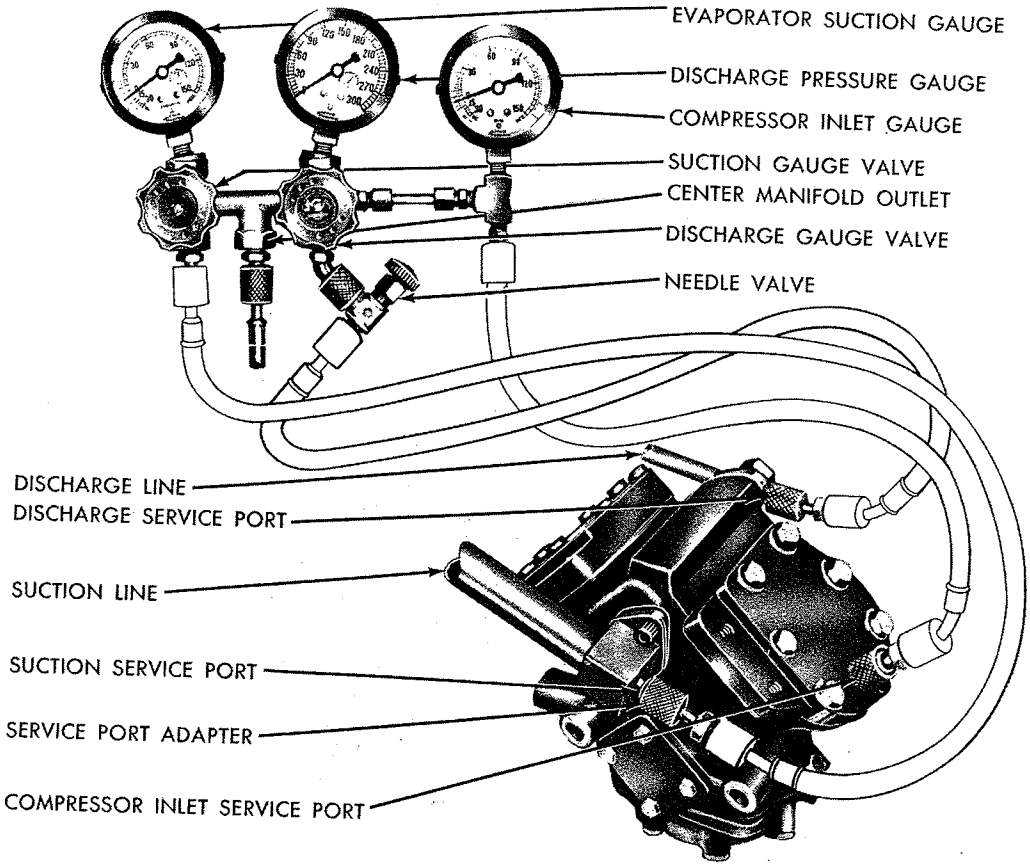


NK1457

***Fig. 17—Gauge Set Manifold Connections (Fury)***

of the compressor. The suction gauge valve at the left is opened to provide a passage between the suction gauge and the center manifold outlet. The discharge gauge valve at the right is opened to provide a passage between the discharge pressure gauge and the center manifold outlet.

Detailed instructions for proper use of the gauge set manifold are contained in the test covering each test and service operation employing these gauges.

## TEST 1

## TEST SYSTEM PRESSURE

***(Engine not Running)***

Install the gauge set manifold. For identification of test hose connections at service ports see Figures 17 and 18. After tightening service port adapters, make sure that the needle valve located below the discharge pressure gauge is open. Purge air from the gauge hoses (Figs. 19 and 20) as follows:

(1) Open suction gauge valve momentarily, then close it.

(2) Open discharge gauge valve momentarily, then close it.

(3) Loosen compressor inlet suction hose connection at the manifold momentarily, then tighten it.

**Step three not necessary with "Valiant and Barracuda" installations.**

If vehicle has been parked and the air conditioning system not operating, gauge pressure should be normal for temperature of the system. Refer to the Temperature-Pressure Relationship Chart.

If no pressure is indicated on the gauges it means that the system is empty, due to a leak. It will be necessary to evacuate, charge with a sweep-test charge, locate and correct the leak, purge the test charge, replace the drier, vacuum the system and charge the system with the proper amount of Refrigerant 12.

If pressures are normal, proceed with the next test and adjustment.

## TEST 2

## REFRIGERANT LEVEL

The system must be operated at high blower speed, with vehicle doors and windows open, if the system is a dual system, both units must be operated simultaneously at high blower speed when this test is made, and when adding to the charge.

The sight glass is an integral part of the receiver-strainer-drier. The outlet line (liquid) from the condenser must be attached to the connection marked IN. The work IN is stamped on the top face of the inlet connection (Fig. 21). If the receiver-strainer-drier is reversed and the lines are connected wrong,

MyMopar.com

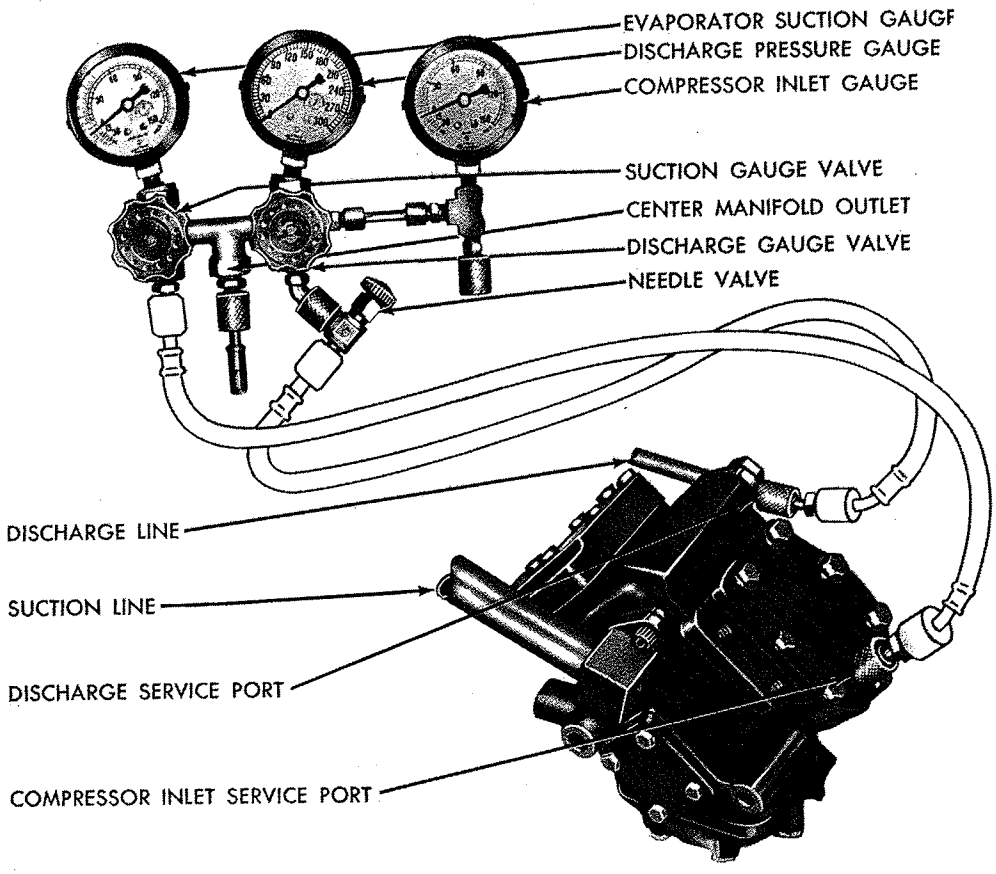


***Fig. 18—Gauge Set Manifold Connections (Valiant and Barracuda)***

the system must be purged, the lines reversed and the system recharged.

Block the air flow across the condenser to raise the discharge pressure to 225 to 250 psi, and check the sight glass for foam. There should be no foam. If sight glass is clear, remove the air restriction from the condenser and allow the discharge pressure to return to normal.

If the foam shows in the sight glass when the discharge pressure is 225 to 250 psi, it indicates the system is low on refrigerant. The proper amount of refrigerant required to complete a full charge may be added to the system as follows: Maintaining the discharge pressure at 225 to 250 psi, add refrigerant gas

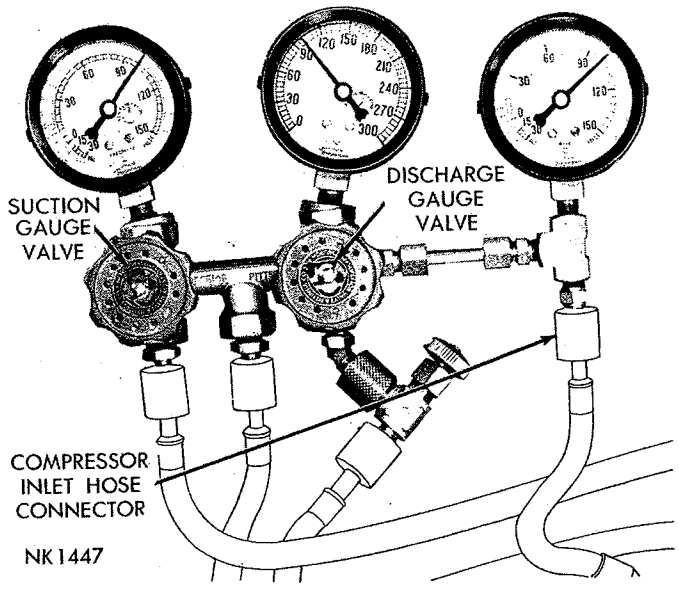


***Fig. 19—Purge Gauge Hoses (Fury)***

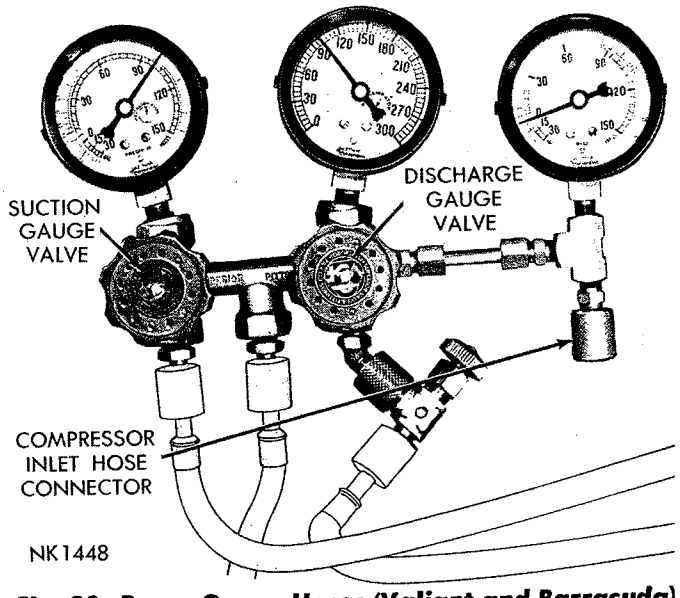


***Fig. 20—Purge Gauge Hoses (Valiant and Barracuda)***

MyMopar.com

## TEMPERATURE-PRESSURE RELATIONSHIP CHART (for Refrigerant 12)

| Temp. F. | Press. PSI | Temp. F. | Press. PSI | Temp. F. | Press. PSI | Temp. F. | Press. PSI | Temp. F. | Press. PSI |
|---|---|---|---|---|---|---|---|---|---|
| 0 | 9.1 | 35 | 32.5 | 60 | 57.7 | 85 | 91.7 | 110 | 136.0 |
| 2 | 10.1 | 36 | 33.4 | 61 | 58.9 | 86 | 93.2 | 111 | 138.0 |
| 4 | 11.2 | 37 | 34.3 | 62 | 60.0 | 87 | 94.8 | 112 | 140.1 |
| 6 | 12.3 | 38 | 35.1 | 63 | 61.3 | 88 | 96.4 | 113 | 142.1 |
| 8 | 13.4 | 39 | 36.0 | 64 | 62.5 | 89 | 98.0 | 114 | 144.2 |
| 10 | 14.6 | 40 | 36.9 | 65 | 63.7 | 90 | 99.6 | 115 | 146.3 |
| 12 | 15.8 | 41 | 37.9 | 66 | 64.9 | 91 | 101.3 | 116 | 148.4 |
| 14 | 17.1 | 42 | 38.8 | 67 | 66.2 | 92 | 103.0 | 117 | 151.2 |
| 16 | 18.3 | 43 | 39.7 | 68 | 67.5 | 93 | 104.6 | 118 | 152.7 |
| 18 | 19.7 | 44 | 40.7 | 69 | 68.8 | 94 | 106.3 | 119 | 154.9 |
| 20 | 21.0 | 45 | 41.7 | 70 | 70.1 | 95 | 108.1 | 120 | 157.1 |
| 21 | 21.7 | 46 | 42.6 | 71 | 71.4 | 96 | 109.8 | 121 | 159.3 |
| 22 | 22.4 | 47 | 43.6 | 72 | 72.8 | 97 | 111.5 | 122 | 161.5 |
| 23 | 23.1 | 48 | 44.6 | 73 | 74.2 | 98 | 113.3 | 123 | 163.8 |
| 24 | 23.8 | 49 | 45.6 | 74 | 75.5 | 99 | 115.1 | 124 | 166.1 |
| 25 | 24.6 | 50 | 46.6 | 75 | 76.9 | 100 | 116.9 | 125 | 168.4 |
| 26 | 25.3 | 51 | 47.8 | 76 | 78.3 | 101 | 118.8 | 126 | 170.7 |
| 27 | 26.1 | 52 | 48.7 | 77 | 79.2 | 102 | 120.6 | 127 | 173.1 |
| 28 | 26.8 | 53 | 49.8 | 78 | 81.1 | 103 | 122.4 | 128 | 175.4 |
| 29 | 27.6 | 54 | 50.9 | 79 | 82.5 | 104 | 124.3 | 129 | 177.8 |
| 30 | 28.4 | 55 | 52.0 | 80 | 84.0 | 105 | 126.6 | 130 | 182.2 |
| 31 | 29.2 | 56 | 53.1 | 81 | 85.5 | 106 | 128.1 | 131 | 182.6 |
| 32 | 30.0 | 57 | 55.4 | 82 | 87.0 | 107 | 130.0 | 132 | 185.1 |
| 33 | 30.9 | 58 | 56.6 | 83 | 88.5 | 108 | 132.1 | 133 | 187.6 |
| 34 | 31.7 | 59 | 57.1 | 84 | 90.1 | 109 | 135.1 | 134 | 190.1 |

through the suction side of the system until foam is cleared from sight glass, then add exactly one-half (½) pound of refrigerant.

**The sight glass used with "VALIANT and BARRACUDA," installations has no arrow, but the inlet is marked "IN." With the engine operating at 1250 rpm, check temperature on the inlet side and on the outlet side of the receiver-strainer-drier (Fig. 22). If the temperature is the same on both ends, this indicates that the unit is functioning properly. However, if the temperature is cooler on the outlet end than it is on the inlet end, the receiver-strainer-drier is faulty (partially plugged) and must be replaced, purge the refrigerant from the system, replace the receive-strainer-drier and recharge.**

## TEST 3

## TESTING THE SYSTEM FOR LEAKS

The Leak Detector Torch Tool C-3569 is a propane gas-burning torch used to locate a leak in any part of the refrigeration system. Refrigerant gas drawn into the sampling or "snifter" tube will cause the flame to change color in proportion to the size of the leak. A very small leak will produce a flame varying from yellowish-green to bright green. A large leak will produce a brilliant blue flame.

(1) Open the torch valve until you hear a faint hiss of escaping gas. Light the test torch and adjust the valve until the flame is very small. A small flame will detect large as well as small leaks, whereas a large

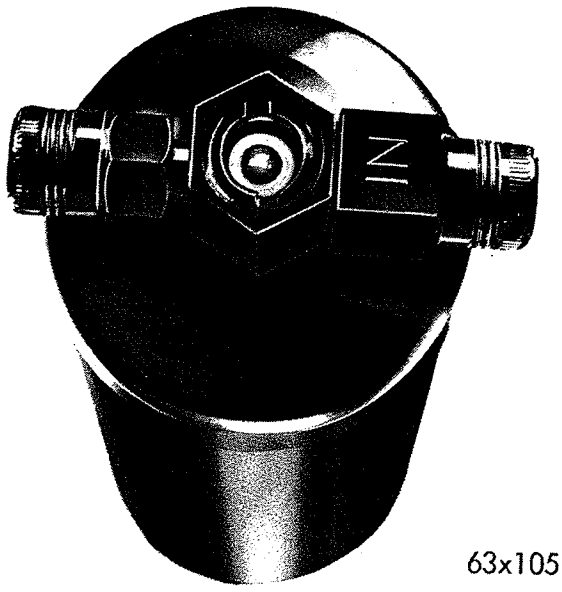

63x105

*Fig. 21—Sight Glass (Fury)*

MyMopar.com

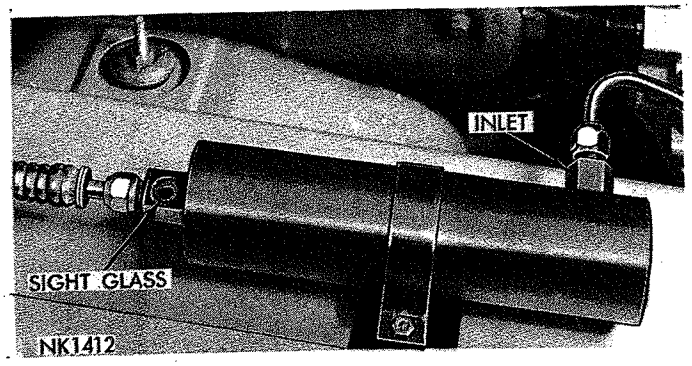


*Fig. 22—Sight Glass (Valiant and Barracuda)*

flame will detect only large leaks. As soon as the reaction plate seen through the window in the burner shield becomes red hot, the tester is ready for use.

(2) Examine all tube connectors and other possible leak points by moving the end of the sampling hose from point to point. Since Refrigerant 12 is heavier than air, it is good practice to place the open end of the sampling hose directly below the point being tested. Be careful not to pinch the sampling tube since this will shut off the air supply to the flame and cause a color change.

(3) Watch for a change in the color of the flame. Small leaks will produce a green color and large leaks a bright blue color. If leaks are observed at tube fittings, tighten the connection, using the proper flare wrenches, and retest.

**CAUTION: Do not use the lighted detector in any place where explosive gases, dust or vapors are present.**

**Do not breathe the fumes that are produced by the burning of refrigerant gas. Large concentrations of refrigerant in the presence of a live flame become dangerously toxis.** Observe the flame through the window of the burner shield, not through the top of the shield.

If the flame remains bright yellow when the tester is removed from possible leak point, insufficient air is being drawn in through the sampling tube, or the reaction plate is dirty.

### Remove Sweep-Test Charge

If the system is free of leaks; or after correcting a leak, and if no air conditioning components have been removed, add the necessary refrigerant as described under TEST 4 "Correcting Low Refrigerant Level." If any parts of the refrigerant system were disconnected, remove the sweep test charge. Close the refrigerant manifold valve so that any refrigerant remaining in the container is sealed. Remove the long test hose from the refrigerant manifold. Insert the free end of this test hose into an exhaust system outlet. Open the right-hand gauge set manifold valve a fraction of a turn to let the sweep-test charge escape

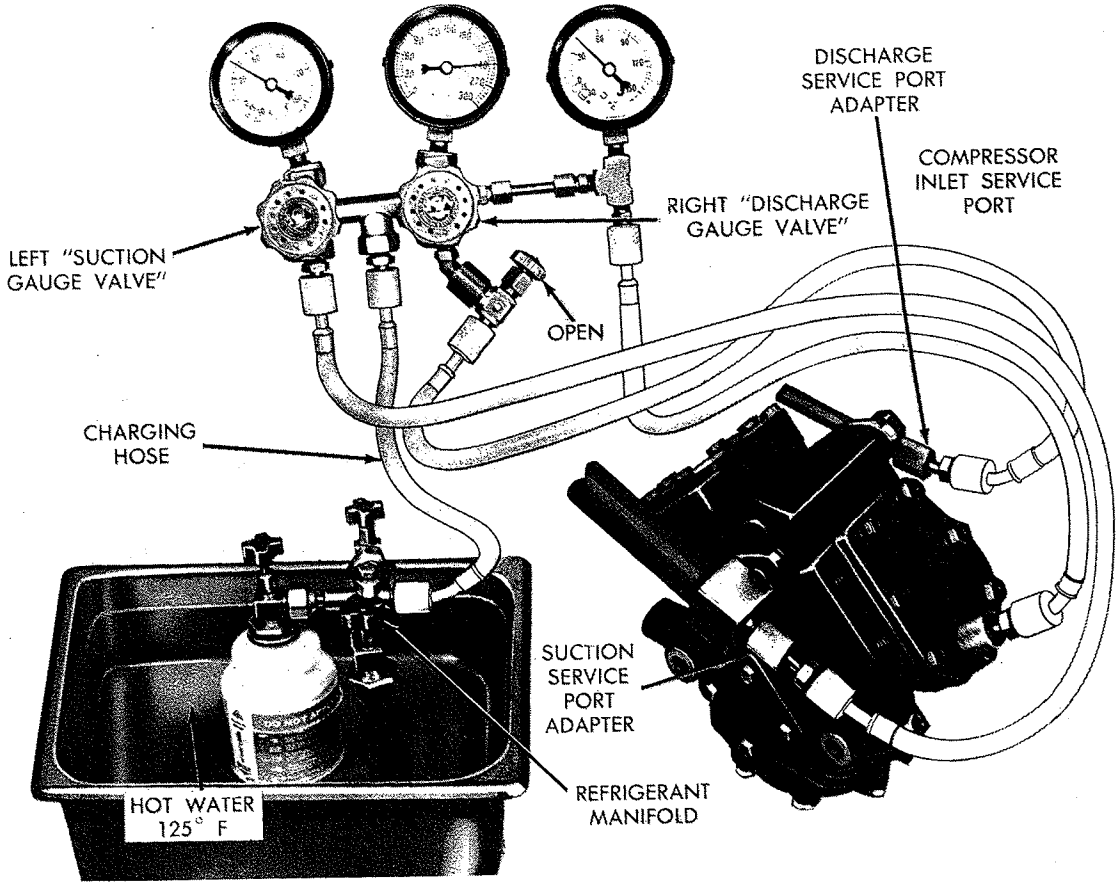


*Fig. 23—Adding Partial Refrigerant Charge (Fury)*

MyMopar.com

slowly. Allow the system to discharge until the discharge pressure gauge registers zero. Open the left-hand gauge valve to allow any refrigerant trapped in the suction side of the system to escape.

## TEST 4

## CORRECTING LOW REFRIGERANT LEVEL

Since the refrigeration system is completely sealed, refrigerant level will not be low unless there is a leak in the system or refrigerant has been allowed to escape by depressing one of the service port valves. For detailed instructions on the proper procedure for checking refrigerant level, refer to "Refrigerant Level and Moisture." TEST 2.

Before adding refrigerant where cause of low level is not known, the system should be tested for leaks. Assuming no leaks are present, or that leaks have been corrected without discharging the system, proceed with partial charge.

Install and connect gauge set manifold valves (Figures 23 and 24).

(1) Close both of the gauge set manifold valves. Open the gauge set manifold needle valve.

(2) On **"Fury"** installations, connect the suction gauge test hose to the suction service port of the compressor.

On **"Valiant and Barracuda"** installations, install the suction gauge test hose to the compressor inlet service port.

On all models connect the discharge gauge test hose to the discharge service port of compressor.

(3) Connect one end of long test hose to center manifold outlet, other end to refrigerant dispensing manifold.

(4) Close two of the dispensing manifold valves and open remaining dispensing manifold valve. Remove protective cap from opened valve.

(5) Screw a can of Refrigerant 12 to the opened manifold valve. Be sure gasket is in place and in good condition. Tighten refrigerant can and manifold locking nut to insure a good seal. Do not over-tighten since 6 to 8 foot-pounds is sufficient if gasket is in good condition.

(6) Turn manifold valve (above the refrigerant can) completely clockwise to puncture the can. This closes the valve and seals the refrigerant in the can.

(7) Place the refrigerant in a large pan of water heated to 125°F. Place pan of water containing the refrigerant can on an accurate scale Tool C-3429 so that the amount of refrigerant added can be weighed. Open the refrigerant manifold valve.

(8) Purge all air from test hoses. Air in the system will be trapped in the condenser causing abnormally high discharge pressures and interfering with condensation of the refrigerant.

(a) Loosen both test hoses at the gauge set manifold. Tighten the hoses as soon as the air is purged.

(b) Loosen charging hose connection at gauge set

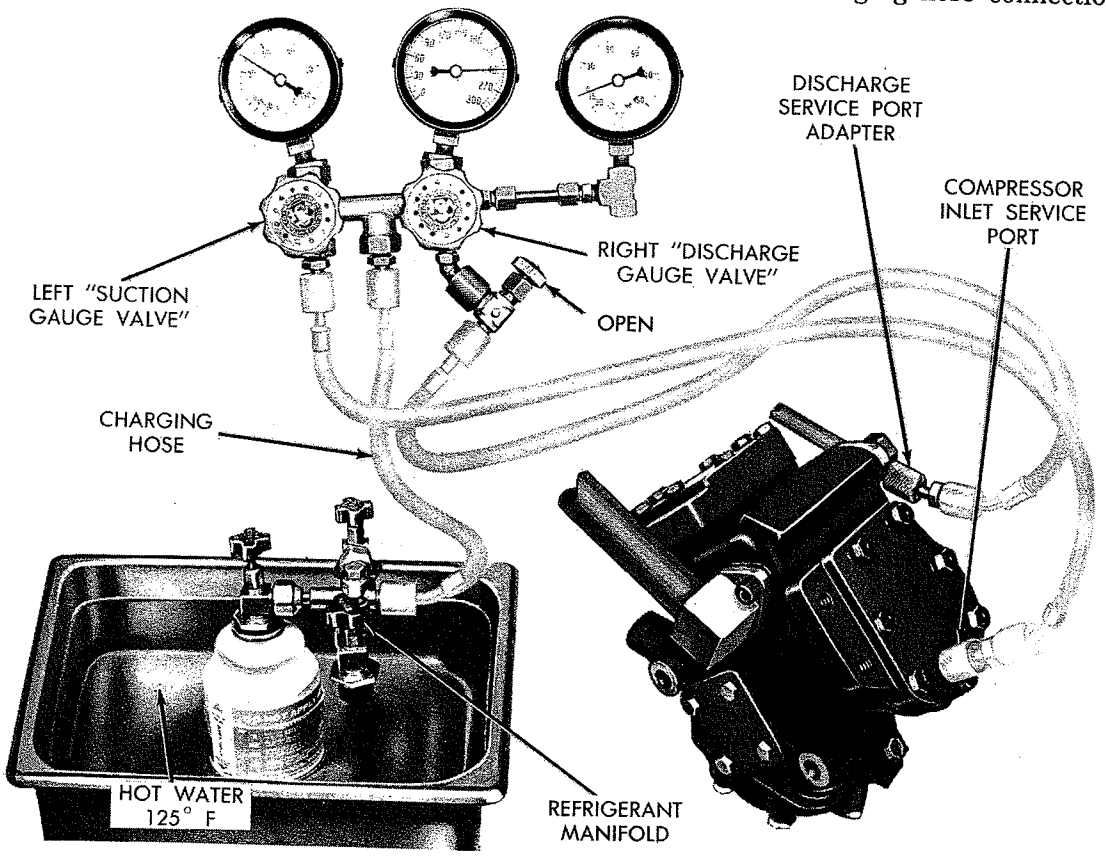


NK1440

***Fig. 24—Adding Partial Refrigerant Charge***

MyMopar.com

manifold. This will purge air from the charging hose. Tighten connection as soon as air is purged.

With vehicle windows open and hood up, operate engine as shown in following chart:

| | Engine | Engine R.P.M. |
|---|---|---|
| Fury | 6 Cyl. | 1600 |
| | 8 Cyl. | 1300 |
| Valiant and Barracuda | 6 Cyl. | 1250 |
| | 8 Cyl. | 1000 |

**Fury installations**—push in "A/C" button, fan switch on high. On dual installation both blowers must be on high speed during charging operation.

**Valiant and Barracuda installations**—push in the "A/C" button and fan switch on high.

If necessary, block the condenser to maintain a discharge pressure of 225 to 250 psi. The system must be charged through the evaporator suction service port as follows:

(9) Slowly open the suction service gauge valve. Meter flow of refrigerant by adjusting the suction service gauge valve so that pressure registered at the suction service gauge does not exceed 50 psi. **Keep refrigerant container upright.**

(10) Add refrigerant gas until there is no foam visible at the slight glass. As soon as all foam clears, note the weight registered on the refrigerant scale.

(11) Watch the refrigerant weighing scale and add **exactly** ½ pound more refrigerant to the system. Close the suction gauge valve.

**Too much refrigerant in the system can cause abnormally high discharge pressures. Care must be used so that exactly ½ pound of refrigerant is added after foam clears in the sight glass.**

(12) Close dispensing manifold valve. Remove test hoses and adapters from the service ports of compressor, and install protective caps at service ports.

## TEST 5

### OVER-ALL PERFORMANCE TEST

Humidity (the amount of moisture in the air) has an important bearing on the temperature of the air delivered to the vehicle's interior. This is true of all air-conditioned systems whether in the home, office or vehicle. It is important to understand the effect humidity has on the performance of the system. When humidity is high, the evaporator has to perform a double duty. It must lower the air temperature and the temperature of the moisture carried in the air. Condensing the moisture in the air transfers a great deal of heat energy into the evaporator fins and tubing. This reduces the amount of heat the evaporator can absorb from the air. In other words, high humidity greatly reduces the evaporator's ability to lower the temperature of the air delivered to the vehicle interior.

Evaporator capacity used to reduce the amount of moisture in the air is not wasted. Wringing some of the moisture out of the air entering the vehicle adds materially to the comfort of the passengers. However, an owner may expect too much from his air-conditioning system on humid days. A performance test is the best way to determine whether or not the system is performing up to standard. This test also provides valuable clues to the possible cause of trouble.

The preliminary inspections in TESTS 1 thru 4, outlined previously, should be made before the "Over-All Performance Test." Install gauge set as shown in Figures 17 and 18.

**Air temperature in test room must be 75°F. minimum for this test.**

### FRONT UNIT PERFORMANCE TEST

Start the engine, open the windows, temperature control lever must be in the off position.

**"Fury" installations**—push in "A/C" button, fan switch on high. Open all grille outlets.

**When testing the front unit of a dual system, leave rear or roof unit blower turned off.**

**Valiant and Barracuda installations**—push in "A/C" button and move fan switch to high. Open grille outlets.

Adjust engine RPM as outlined in the following chart:

| | Engine | Engine R.P.M. |
|---|---|---|
| Fury | 6 Cyl. | 1600 |
| | 8 Cyl. | 1300 |
| Valiant and Barracuda | 6 Cyl. | 1250 |
| | 8 Cyl. | 1000 |

Arrange gauge set manifold hoses and tachometer leads to allow hood to be lowered, then close hood.

Place motor-driven psychrometer Tool C-3704 at cowl inlet opening. Distilled water should be used with this meter to prevent drying out and hardening the wet sock.

Place thermometer Tool C-3623 fully into right outlet grille opening. The left outlet should be fully extended and directed towards rear of vehicle.

Operate the air-conditioning system until a stabilized condition on the gauges and thermometers has been established. One of the most important steps in making the over-all performance test is that the engine must be operated at the RPM as indicated on the above chart for approximately five minutes to allow all the under-hood components of the system to reach their operating temperature.

**Partially** close the needle valve, located below the discharge pressure gauge, to minimize oscillation o

MyMopar.com

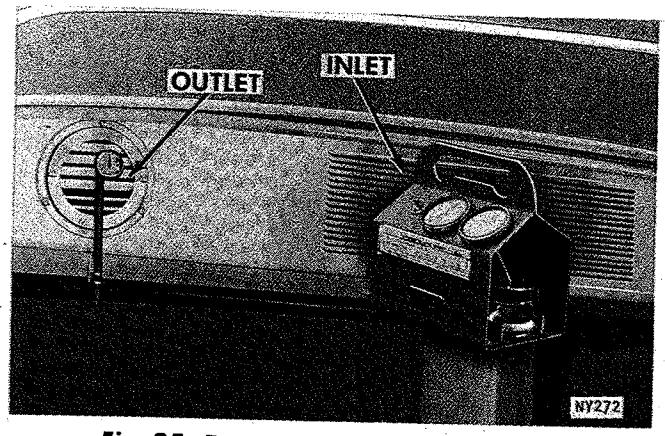


*Fig. 25—Roof Unit Performance Test*

the pointer. Do not close the needle valve completely since this would prevent the discharge pressure gauge from registering pressure.

This test should be performed with the discharge pressure from 190 to 210 psi. The 190 to 210 pound pressure is for **test purposes only.** To increase pressure restrict the air flow across the condenser using cardboard, paper, etc. to decrease pressure, increase air flow across condenser with external floor fans.

Observe and record both the "Inlet Dry Bulb Temperature" and "Inlet Wet Bulb Temperature" as registered on the psychometer.

Observe and record "Discharge Air Temperature" registered by thermometer at right hand grille outlet.

From the appropriate "Performance Temperature Chart," for vehicle and type installation being tested (Figs. 26 thru 29), determine the maximum allowable discharge air temperature for the prevailing "Dry" and "Wet" bulb temperatures recorded. If the vehicle's discharge air temperature is at or below the temperature given on the Performance Chart, the air-conditioning is delivering its cooling capacity. However, to assure trouble-free operation, continue with the "Evaporator Pressure Regulator Test 6."

If discharge air temperature at the outlet grilles is above the maximum allowable on Performance Chart, perform the following operations in the order indicated until proper performance is obtained.

(1) Evaporator Pressure Regulator Test.
(2) Compressor Capacity Test.
(3) Expansion Valve Test.

## ROOF UNIT PERFORMANCE TEST

### *("Fury" Installation)*

The method used to test the roof unit of a dual

SINGLE UNIT

INLET AIR WET BULB TEMPERATURE

| 55 | 56 | 57 | 58 | 59 | 60 | 61 | 62 | 63 | 64 | 65 | 66 | 67 | 68 | 69 | 70 | 71 | 72 | 73 | 74 | 75 | 76 | 77 | 78 | 79 | 80 | 81 | 82 | 83 | 84 | 85 | 86 | 87 | 88 | 89 | 90 |
|---|---|---|---|---|---|---|---|---|---|---|---|---|---|---|---|---|---|---|---|---|---|---|---|---|---|---|---|---|---|---|---|---|---|---|---|
| 41 | 42 | 43 | 44 | 45 | 46 | 47 | 48 | 49 | 50 | 50 | 50 | 51 | 51 | 52 | 52 | 53 | 53 | 53 | 54 | 54 | 55 | 56 | 57 | 58 | 59 | 59 | 60 | 62 | 64 | 66 | 67 | 68 | 69 | 70 | 71 |

DISCHARGE AIR DRY BULB TEMPERATURE

INLET AIR DRY BULB TEMPERATURE MUST BE BETWEEN 75° AND 110°F NK1342A

*Fig. 26—Performance Temperature Chart—Front Unit Only*

FRONT UNIT OF DUAL

INLET AIR WET BULB TEMPERATURE

| 55 | 56 | 57 | 58 | 59 | 60 | 61 | 62 | 63 | 64 | 65 | 66 | 67 | 68 | 69 | 70 | 71 | 72 | 73 | 74 | 75 | 76 | 77 | 78 | 79 | 80 | 81 | 82 | 83 | 84 | 85 | 86 | 87 | 88 | 89 | 90 |
|---|---|---|---|---|---|---|---|---|---|---|---|---|---|---|---|---|---|---|---|---|---|---|---|---|---|---|---|---|---|---|---|---|---|---|---|
| 43 | 44 | 45 | 46 | 47 | 48 | 49 | 50 | 51 | 52 | 52 | 52 | 53 | 53 | 54 | 54 | 55 | 55 | 55 | 56 | 56 | 57 | 58 | 59 | 60 | 61 | 61 | 62 | 64 | 66 | 68 | 69 | 70 | 71 | 72 | 73 |

DISCHARGE AIR DRY BULB TEMPERATURE

INLET AIR DRY BULB TEMPERATURE MUST BE BETWEEN 75° AND 110°F NK1343A

*Fig. 27—Performance Temperature Chart—Front Unit of Dual System*

MyMopar.com

ROOF UNIT OF DUAL

INLET AIR WET BULB TEMPERATURE

| 55 | 56 | 57 | 58 | 59 | 60 | 61 | 62 | 63 | 64 | 65 | 66 | 67 | 68 | 69 | 70 | 71 | 72 | 73 | 74 | 75 | 76 | 77 | 78 | 79 | 80 | 81 | 82 | 83 | 84 | 85 | 86 | 87 | 88 | 89 | 90 |
|---|---|---|---|---|---|---|---|---|---|---|---|---|---|---|---|---|---|---|---|---|---|---|---|---|---|---|---|---|---|---|---|---|---|---|---|
| 52 | 53 | 54 | 55 | 56 | 57 | 58 | 59 | 60 | 61 | 61 | 61 | 62 | 62 | 63 | 63 | 64 | 64 | 64 | 65 | 66 | 67 | 68 | 69 | 70 | 71 | 71 | 72 | 74 | 76 | 78 | 79 | 79 | 80 | 80 | 81 |

DISCHARGE AIR DRY BULB TEMPERATURE

INLET AIR DRY BULB TEMPERATURE MUST BE BETWEEN 75° AND 110°F NK1344A

***Fig. 28—Performance Temperature Chart—Roof Unit of Dual System***

SINGLE UNIT

INLET AIR WET BULB TEMPERATURE

| 55 | 56 | 57 | 58 | 59 | 60 | 61 | 62 | 63 | 64 | 65 | 66 | 67 | 68 | 69 | 70 | 71 | 72 | 73 | 74 | 75 | 76 | 77 | 78 | 79 | 80 | 81 | 82 | 83 | 84 | 85 | 86 | 87 | 88 | 89 | 90 |
|---|---|---|---|---|---|---|---|---|---|---|---|---|---|---|---|---|---|---|---|---|---|---|---|---|---|---|---|---|---|---|---|---|---|---|---|
| 40 | 41 | 42 | 43 | 44 | 45 | 46 | 47 | 48 | 49 | 50 | 50 | 51 | 51 | 52 | 52 | 53 | 53 | 54 | 54 | 55 | 56 | 57 | 58 | 59 | 60 | 61 | 62 | 64 | 66 | 68 | 69 | 70 | 71 | 72 | 73 |

DISCHARGE AIR DRY BULB TEMPERATURE

INLET AIR DRY BULB TEMPERATURE MUST BE BETWEEN 75° AND 100°F NK1341A

***Fig. 29—Performance Temperature Chart***

installation is essentially the same as for a front unit. The front unit should be tested before testing the roof unit. When testing the roof unit of a dual system, turn the front unit off by pushing the "OFF" button. Connect a jumper from the positive terminal of the battery to the compressor so that the refrigeration part of the entire system can be operated without air-flow through the front unit.

Open the windows, adjust engine speed to 1600 rpm for 6 cylinder engines and 1300 rpm for 8 cylinder engines and close the hood. Turn roof unit blower motor switch to "high" speed position.

Place motor-driven psychrometer Tool C-3704 near roof unit air outlet grille and a thermometer Tool C-3623 in right-hand air outlet grille (Fig. 25).

Operate the air-conditioning system until a stabilized condition on the gauges and thermometers has been established. One of the most important factors in making the over-all performance test is that the engine must be operated at 1600 rpm for 6 cylinder engines and 1300 rpm for 8 cylinder engines for a sufficient time to build up to operating temperatures and allow all the under-hood components of the system to be subjected to the under-hood operating temperatures for a period of time.

Partially close the needle valve, located below the discharge pressure gauge, to minimize oscillation of the discharge gauge pointer. Do not close the needle valve completely since this would prevent discharge pressure gauge from registering discharge pressure.

Read the discharge pressure on the gauge. This test should be performed with the discharge pressure from 190 to 210 psi. The 190 to 210 pound-pressure is for test purposes only. These pressures change according to the ambient temperature, humidity and the efficiency of the entire system.

Take the necessary steps to bring and maintain the discharge pressure within these limits.

To increase the discharge pressure, restrict the air flow across the condenser using cardboard, paper, etc. In high ambient temperatures and high humidity areas, it may be necessary to put an electric fan in front of the condenser in order to keep the pressure down to these limits.

Observe and record both the "Inlet Dry Bulb Temperature" and "Inlet Wet Bulb Temperature" as registered on the psychrometer.

Observe and record "Discharge Air Temperature" registered by the thermometer at right-hand grille outlet.

MyMopar.com

From the approximate Roof Unit Performance Temperature Chart for vehicle and type installation being tested (Figs. 26 thru 29), determine the maximum allowable discharge air temperature for the prevailing "Dry" and "Wet" bulb temperatures. If the discharge air temperature is at or below the temperature given on the Performance Chart, the roof unit is delivering its rated cooling capacity.

If the discharge air temperature at the outlet grilles is above the maximum allowance on the "Performance Chart," perform the following operations in the order indicated until proper performance is obtained.

1. Evaporator Pressure Regulator Test.
2. Compressor Capacity Test.
3. Expansion Valve Test.

## TEST 6

## EVAPORATOR PRESSURE REGULATOR VALVE TEST

TEST 6 is divided into two parts to simplify the test procedures. As both parts of the test must be made progressively, it is important that both parts be read thoroughly before proceeding with the test.

### *Part 1*

The EPR valve is calibrated to produce maximum "cooling" without causing frost or ice on the evaporator fins and tubing. If for any reason the factory calibration has been disturbed, the EPR valve may restrict the flow of refrigerant at an evaporator pressure which is either too high for maximum performance or too low to prevent coil freeze up.

The evaporator pressure regulator test determines whether or not the valve is functioning properly.

### *EPR Valve Test Conditions*

Normally, this test is performed after completion of the "Performance Test." The gauge set manifold will be connected as illustrated in Figure 17.

**"Fury" installations**—adjust the engine speed to 1600 rpm for 6 cylinder engines and 1300 rpm for 8 cylinder engines, push the "FRESH" button and turn the blower on high, open the windows and open the hood for this test.

**Valiant and Barracuda installations**—this test not necessary, EPR valve not used.

The heat load on the evaporator will soon call for continuous operation of the refrigeration system. The EPR valve will open and the pressure at both the suction port and the compressor inlet service port will be approximately the same. It is normal for the compressor inlet pressure to be slightly lower than the evaporator suction pressure.

Observe the evaporator suction gauge and the compressor inlet gauge. Both should register 26 psi (Fig. 30), or slightly higher. This indicates that the EPR valve is open. The next step is to determine the minimum evaporator suction pressure maintained in the suction line by the EPR valve.

EPR valve action can be accelerated by reducing the heat load on the evaporator as follows:

**"Fury" installations**—by pushing the blower to the "Low-Speed" position, push the "Max" button. This will reduce the volume of air passing through the evaporator, immediately the evaporator will start to get colder. It is necessary to watch bolt suction gauges for the following reactions:

(1) Pressure registered at the evaporator suction gauges will become progressively lower.

(2) At the same time, the compressor inlet gauge will start to fluctuate. This fluctuation is caused by the alternate opening and closing of the EPR valve. It indicates that suction pressure is reduced to the point where it just about balances the internal gas pressure in the bellows. The EPR valve is actually operating as a modulating valve.

(3) When fluctuation at the compressor inlet gauge stops and the pressure registered drops steadily, the EPR valve is maintaining minimum suction line pressure. Allow pressure registered at the compressor inlet gauge to drop to 17 psi or lower, then read the evaporator suction gauge (refer to Figure 31).

**If, and only if the compressor inlet pressure will not pull down to 17 psi, increase engine speed to approximate rpm on the following chart:**

| | Engine | Engine R.P.M. |
|---|---|---|
| Fury | 6 Cyl. | 2250 |
| | 8 Cyl. | 2000 |

(4) The suction gauge pressure should be 22 to 26 psi. This indicates that the suction pressure maintained by the EPR valve is correct. However, if engine

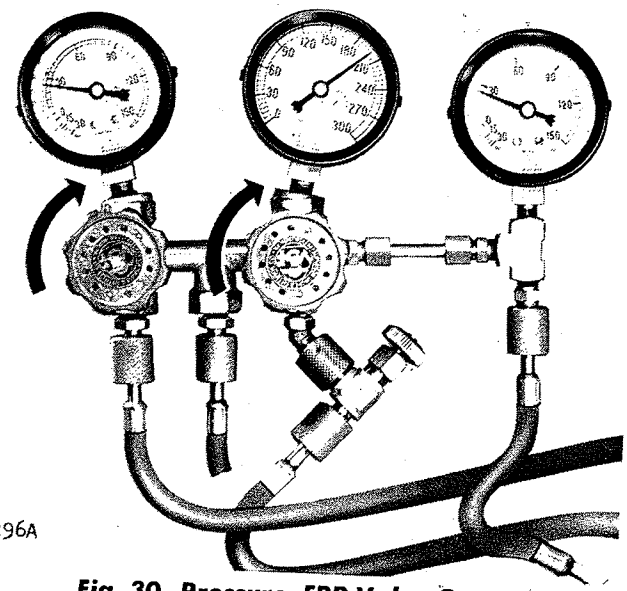

NY296A

*Fig. 30—Pressure, EPR Valve Open*

MyMopar.com

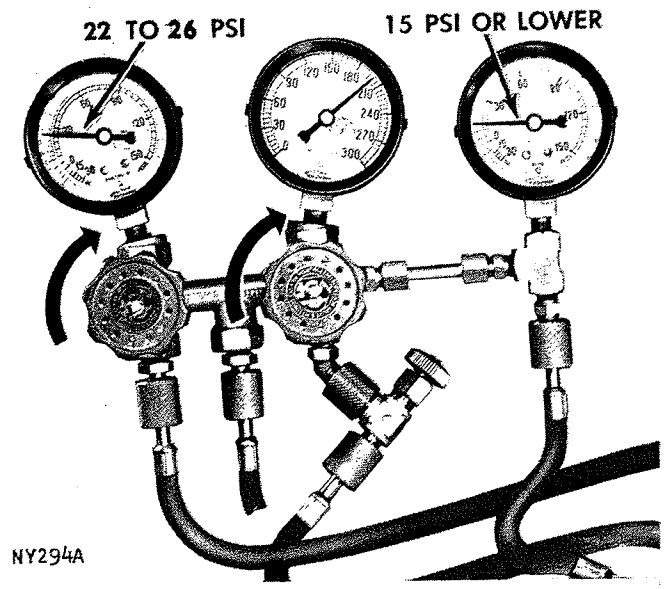


*Fig. 31—EPR Valve Test Pressures*

speed is increased to approximate rpm shown in the above chart in order to pull the inlet pressure down to 15 psi, this also increases the suction pressure to 24 to 28 psi. Again, determine the pressure at which the valve is fully open.

(5) **"Fury" installation**—push the "FRESH" button and turn the blower on high. This will increase the heat load on the evaporator and increase the suction pressure, causing the EPR valve to open fully.

(6) Watch both the evaporator suction and the compressor inlet pressure gauge. The pressure registered at the compressor inlet gauge will increase quite rapidly. Both suction gauges should again stabilize at a pressure of 26 psi or slightly higher within a few minutes.

If the minimum suction pressure registered (Step 4, above) is 22 to 26 psi and the suction pressure registered with the valve fully open (Step 6 6above) is 31 psi or slightly higher, the EPR valve is functioning normally. A system which passes both the Over-All Performance Test and the EPR Valve Test requires no further tests.

### Suction Pressure Above 26 psi.

If the minimum suction pressure is higher than 26 psi (Step 4, above), the evaporator will not get as cold as it should for maximum performance. It will be necessary to replace the EPR valve, repeat the EPR Valve Test and the Performance Test.

### Suction Pressure Below 22 psi.

If suction pressure goes below 22 psi (Step 4, above), the evaporator is too cold. The correction is to replace EPR valve and repeat the EPR Valve Test.

If the system failed to pass the Performance Test but passed the EPR Valve Test, proceed with the Compressor Capacity Test.

### Part 2

This part of the test will save time as the expansion valve and compressor are being tested during the EPR valve test. There is always a definite relationship between the temperature and pressure of refrigerant vapor in a system that's working right; however, this temperature-pressure relationship will be upset if the compressor capacity is not up to specifications, or if the expansion valve is not doing its job properly.

**If the expansion valve opens too much, the evaporator will be flooded and there will be liquid refrigerant leaving the evaporator outlet. If there is liquid refrigerant along with the vapor, the vapor can't become superheated and the gas temperature will be low in relation to pressure.**

**If the expansion valve doesn't open enough, the evaporator will be starved and the liquid refrigerant will be vaporized before it gets to the outlet. As the temperature of the vapor is somewhere around 30 degrees, it will be cooler than the outside air so that the vapor will still absorb some heat before it leaves the evaporator. This will create a over-superheated condition where the temperature will be very high in relation to pressure.**

If the compressor capacity is low, it is because the refrigerant vapor is leaking internally, usually past the reed valves or a blown gasket. This will be indicated by low discharge pressure. With the refrigerant being recirculated in the compressor due to the internal leakage, heat will be generated and the refrigerant will absorb some of this heat; superheating the refrigerant. This will result in a discharge temperature which will be above the maximum.

When you hook up the gauges, install the thermometer clip on the discharge line, getting the clip as close to the compressor as possible and making sure you have a tight contact between the clip and the discharge line. The thermometer bulb must fit tightly (Fig. 32) in the loop and none of the bulb should

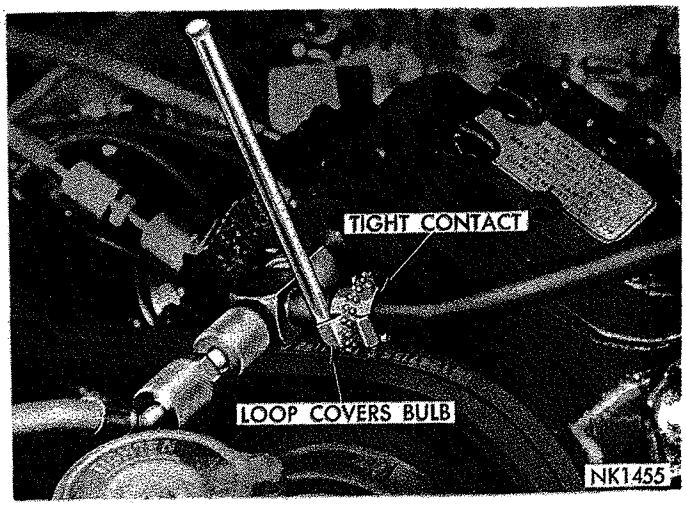


*Fig. 32—Thermometer Clip and Thermometer Installed*

MyMopar.com

overhang the clip otherwise you will measure air temperature instead of refrigerant temperature.

**It is recommended to wrap the bulb and clip to insulate them from the engine compartment heat (Fig. 33).**

You must have a high heat load to get head pressure within the range of the chart.

When the head pressure is in the chart range, wait a few minutes. This will allow the pressure to stabilize and the thermometer to register the exact temperature. Then read the discharge pressure and temperature. Consult the chart to see if the temperature is correct for the discharge pressure reading.

## COMPRESSOR DISCHARGE TEMPERATURE-PRESSURE CHART

| DISCHARGE PRESSURE GAUGE READING (PSI) | TEMPERATURE FAHRENHEIT | |
|---|---|---|
| | MINIMUM | MAXIMUM |
| 190-195 | 168 | 214 |
| 195-200 | 170 | 216 |
| 200-205 | 172 | 218 |
| 205-210 | 174 | 220 |
| 210-215 | 176 | 222 |
| 215-220 | 178 | 224 |
| 220-225 | 180 | 226 |
| 225-230 | 182 | 228 |

For example, suppose the pressure is 203 PSI. In the chart, you will see that the minimum temperature should be 172 degrees and the maximum temperature is 218 degrees.

**If the temperature is in the range, the compressor and the expansion valve are okay. No further testing is necessary.**

**If the temperature is below the minimum, the expansion valve is flooding the evaporator and the expansion valve should be replaced.**

**If the temperature is above the maximum, either the compressor or the expansion valve is faulty in which case the system will have to be discharged.**

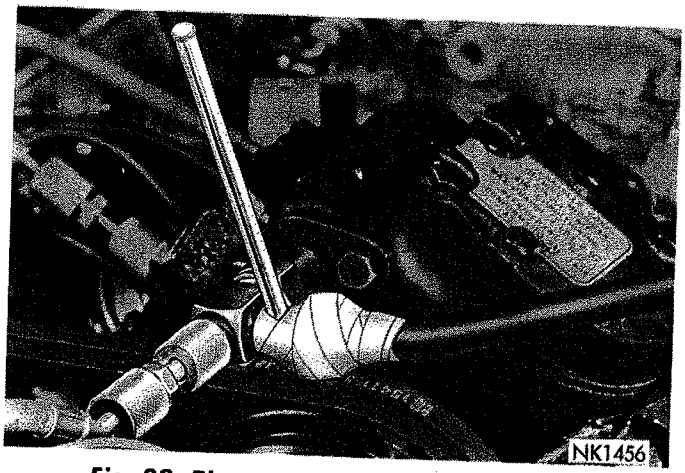


*Fig. 33—Thermometer and Clip Insulated*

Test the compressor and expansion valve separately using Tests 7 and 8 which follow.

A conclusive result from this test eliminates the need for a separate compressor and expansion valve test.

## TEST 7

## COMPRESSOR CAPACITY CHART

The Performance Test and the Evaporator Pressure Regulator Valve Test should be performed before testing compressor capacity. These tests are made with the system fully charged with refrigerant. It is necessary to discharge the system before making the Compressor Capacity Test. It is also necessary to discharge the system in order to perform the Expansion Valve Test. It is recommended that tests be made in the order in which they are presented in this Service Manual. Experience has proven this to be the surest and quickest way to locate and correct the cause of unsatisfactory performance.

The Compressor Capacity Test must be performed immediately after completing the Evaporator Pressure Regulator Valve Test as the compressor will be up to operating temperature and most of the refrigerant oil will have returned to the compressor crankcase.

If the system has been standing any length of time, it will be necessary to operate the air-conditioning system at full capacity for at least 15 minutes at the engine RPM shown in the following chart.

| | Engine | Engine R.P.M. |
|---|---|---|
| Fury | 6 Cyl. | 1600 |
| | 8 Cyl. | 1300 |
| Valiant and Barracuda | 6 Cyl. | 1250 |
| | 8 Cyl. | 1000 |

This will cause most of the compressor oil in the system to be returned to the compressor crankcase.

**It will also insure that the compressor is up to operating temperature, which is very important when making this test.**

### *Discharge the System*

When making "Compressor Capacity Test" the compressor must be disconnected from the rest of the system. That means system must be discharged.

(1) Lead the manifold discharge hose into an exhaust ventilation system or to outside of building so service area will not be filled with refrigerant vapor.

(2) Fully open manifold needle valve.

(3) Open discharge (right-hand) gauge valve a small amount. This will allow refrigerant vapor to discharge slowly.

**CAUTION: Do not open the valve fully and allow the system to discharge rapidly, since this would sweep**

MyMopar.com

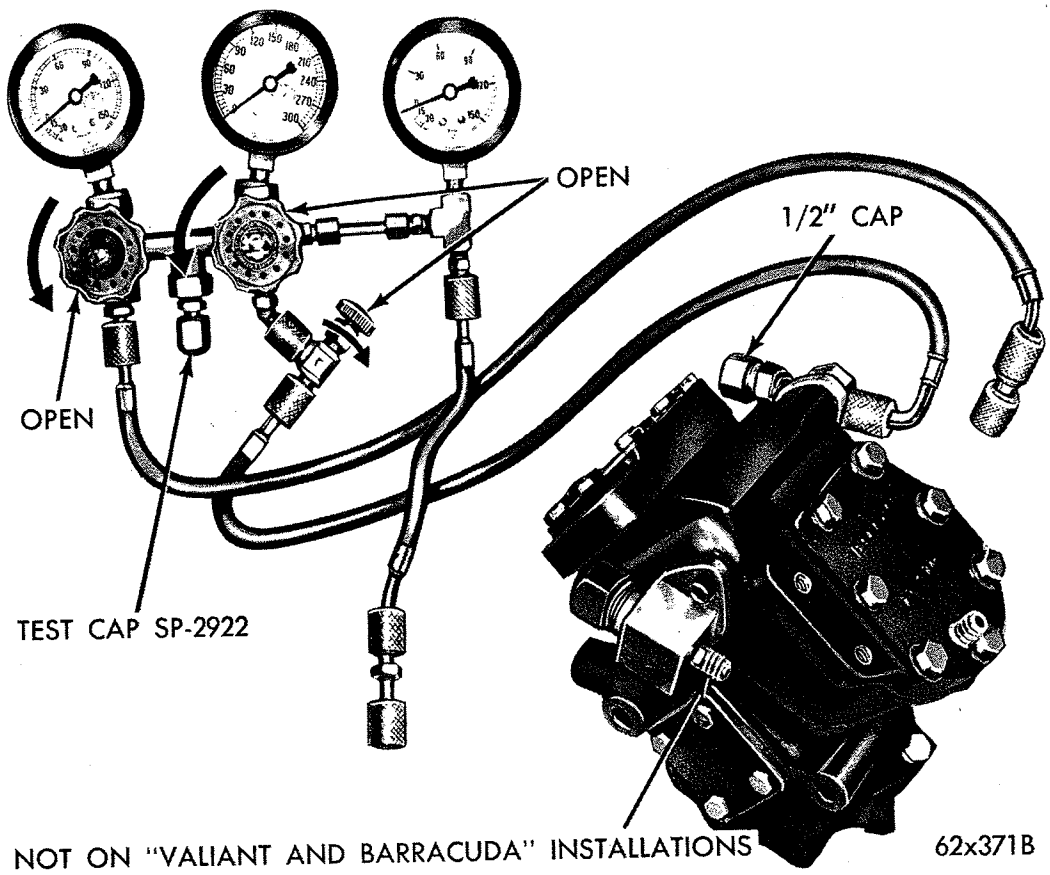


***Fig. 34—Compressor Test Connections (Typical)***

**some of the refrigerant oil out with the refrigerant.**

(4) Allow the system to discharge until discharge pressure gauge registers zero.

(5) Open suction (left-hand) gauge valve to release any vapor trapped at suction side.

## TEST PREPARATION AND CONNECTIONS

After the system is completely discharged, isolate the compressor and connect the gauge set manifold as follows:

(1) Disconnect discharge line from the muffler. Cap muffler outlet with a ½ inch cap. Seal discharge line with a ½ inch plug.

(2) Disconnect evaporator suction line (hose) from the suction muffler. Seal the suction line and muffler as follows: Use a ⅝ inch fitting or plug on units equipped with the V2 Compressor and a ¾ inch fitting or plug for the RV2 Compressor.

The compressor is now isolated from the system and sealed at both the suction and the discharge sides. Refer to Figure 34, and make the following gauge set manifold connections:

(a) Disconnect test hose and adapter from compressor inlet port.

(b) Remove valve body from the compressor inlet port. The tire valve stem Tool C-3788 can be used for this purpose.

(c) Disconnect test hose from suction service port of the fitting.

(d) Install test cap (SP-2922) at center manifold outlet.

**Be sure the test cap is perfectly clean. Particles adhering to the cap or the metering orifice can restrict the flow and cause false readings. Never use a wire or probe of any kind to clean the cap. Wash it with clean solvent and blow dry with compressed air.**

(3) Make sure both the left and right gauge valves are open. The compressor can now be operated as an air pump. Air will be drawn in through the compressor inlet port, compressed and delivered (through the test hose attached to the discharge port) to the gauge set manifold. The compressor capacity is determined by noting the pressure registered at the discharge gauge when the compressor is driven at the exact engine R.P.M. shown in the chart that follows.

**The tachometer used must be accurate. The compressor capacity test results are dependent upon controlling the engine speed at the exact engine R.P.M. shown in the chart.**

### *Test Pressures and Results*

(1) Start engine and adjust to exact engine R.P.M. shown in chart.

(2) Slowly close the left-hand gauge valve. Refer to

MyMopar.com

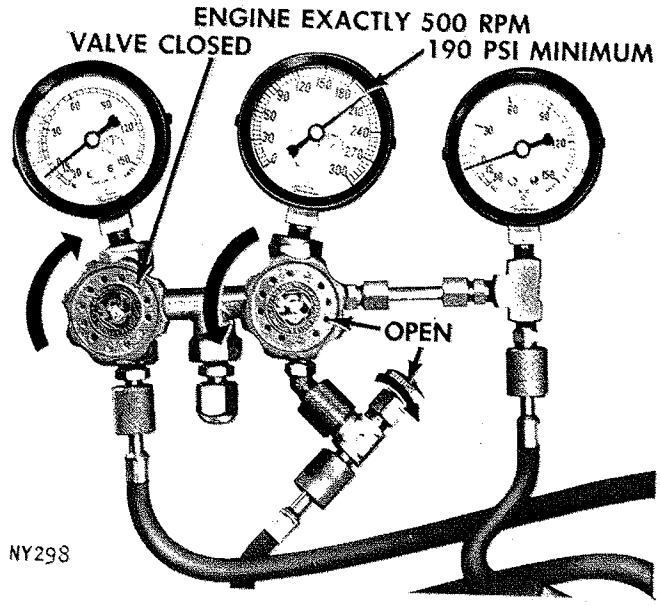


***Fig. 35—Compressor Test Pressures—V2 Compressor Shown***

Figure 35. All air delivered by the compressor will now be discharged through the metering orifice in the test cap. The pressure registered at the discharge gauge should build up to at least the minimum PSI shown in the chart.

## COMPRESSOR CAPACITY CHART

| | Engine Cu. In. Displacement | Compressor Type | Engine RPM | Minimum PSI |
|---|---|---|---|---|
| Valiant and Barracuda | 170<br>225<br>273 | V-2 | 500 | 190 |
| Fury | 225 | V-2 | 500 | 190 |
| Fury | 318 | RV-2 | 500 | 215 |
| | 361 | | | 230 |
| | 383 | | | 230 |
| | 413 | | | 230 |
| | 426 | | | 230 |

(3) The load on the compressor may affect engine speed to **exact** R.P.M. shown in the chart. The discharge pressure should build up to the minimum PSI shown in the chart.

(4) Open the left-hand gauge valve momentarily to allow the pressure to drop. Then close the valve to make sure the pressure again builds up to the minimum PSI and engine R.P.M. shown in the chart.

**CAUTION: To prevent possible compressor damage from excessive heat, do not operate the compressor more than a total of five minutes.**

If the compressor does not develop the minimum PSI at the proper engine speed shown in the chart, both the compressor valve plate assemblies and gaskets must be replaced. (See "Compressor Service Instructions.") After repair, the compressor capacity must be tested before charging the system and re peating the "Over All Performance Test."

A compressor that consistently builds up to the minimum PSI, at the proper engine speed shown in the chart is delivering rated capacity. Reconnect the evaporator suction line to suction muffler and the discharge line to muffler discharge fitting. When connecting these lines use a new gasket or "O" ring, and lubricate both male and female threads and the turning surface of the female nut with refrigerant oil. Proceed with the "Expansion Valve Test."

## TEST 8

## EXPANSION VALVE TEST

The following procedure permits testing the expansion valve without removing it from the system. This test is made with the system completely discharged.

When testing the expansion valves on dual installations (front and rear units) **each expansion valve must be tested separately.** To test the expansion valve of the front unit, disconnect and cap the liquid and suction lines leading to the rear unit evaporator and expansion unit. To test the expansion valve of the rear unit, disconnect and cap the liquid and suction lines leading to the front unit evaporator and expansion valve.

**IMPORTANT: It is absolutely necessary for the compressor to pass the "compressor capacity" test** before **testing the expansion valve in its installed position.**

A compressor which does not pass the compressor capacity test may have leaking reed valves or a fractured head gasket. Such a leak would allow refrigerant gas, used in the expansion valve test, to leak from the discharge side of the compressor. An internal leak between the discharge and suction side of the compressor will upset the expansion valve test results.

## TEST PREPARATIONS AND CONNECTIONS

(1) Close both the left and right gauge set manifold valves. Open the manifold needle valve.

(2) Install a ¼" connector and a ¼" tee fitting at the side of the gauge manifold. Install test cap (Tool SP-2922) on tee fitting and connect test hose to lower end of tee fitting.

(3) Connect other end of suction test hose as follows:

(a) In **Fury** installations; to the suction service port, using the special adapter to keep the suction service valve open.

(b) On **Valiant and Barracuda** installations; to the compressor inlet service port, using the special adapter to keep the suction service valve open.

(4) Connect discharge test hose to discharge service port, using a special adapter to hold this service valve open.

MyMopar.com

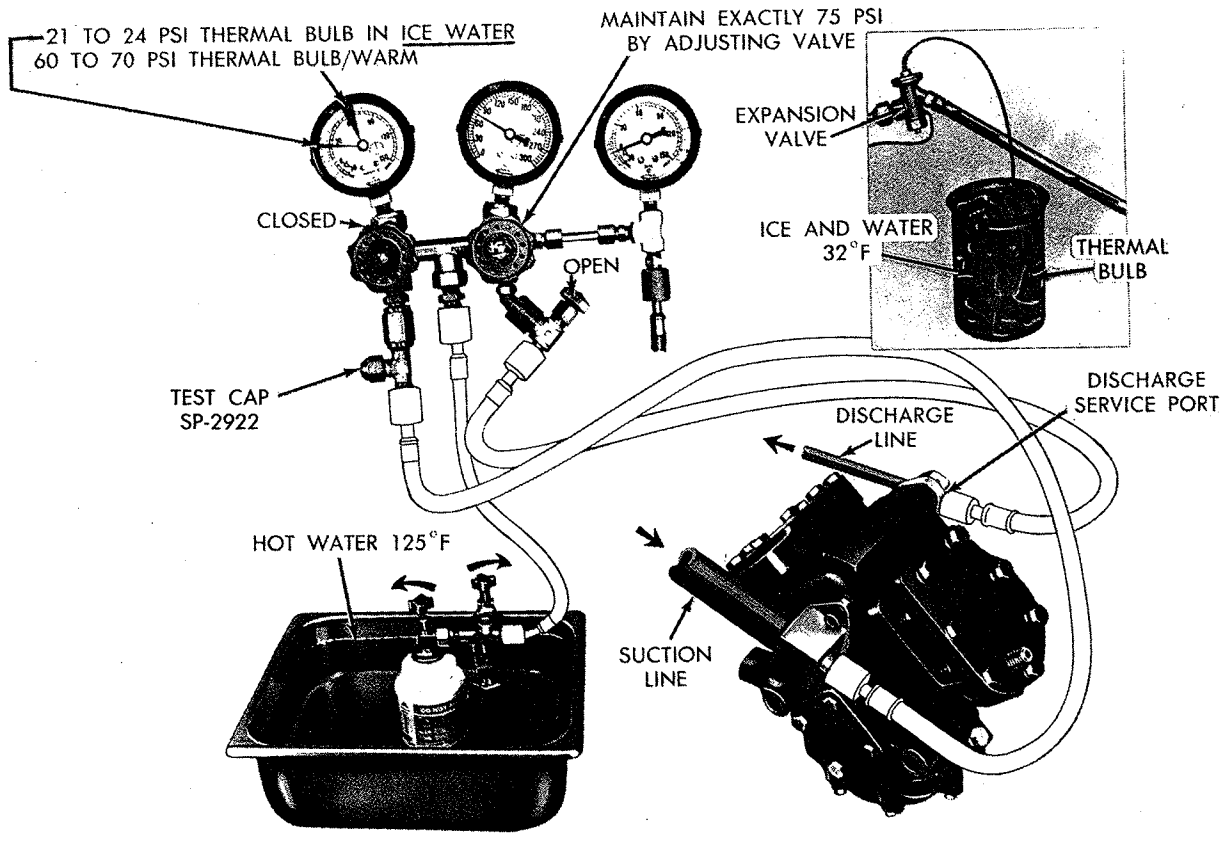


***Fig. 36—Expansion Valve Test (Fury)***

(5) Connect one end of long test hose to center of the gauge manifold, other end to refrigerant dispensing manifold.

(6) Close two of the dispensing manifold valves (turn clockwise). Open remaining dispensing manifold valve (fully counterclockwise). Remove protective cap from opened valve.

(7) Screw a refrigerant can to opened manifold valve, and tighten 6 to 8 foot-pounds maximum. Tighten manifold locking nut against shoulder of can, again using 6 to 8 foot-pounds maximum to insure a good seal.

(8) Turn the manifold valve (above the refrigerant can) **completely clockwise** to puncture the can. This also closes valve and seals refrigerant in the can.

This completes all test connections necessary for the expansion valve test. Compare the test set-up against those illustrated in Figures 36 and 37, then, proceed with the following preparation steps:

(a) On **Fury, Valiant and Barracuda** installations, remove the expansion valve thermal line from its well, located in the suction line.

(b) Prepare a large pan of water heated to 125 degrees F. and place the refrigerant can upright in the water. Use enough water to provide the heat necessary to insure ample refrigerant pressure throughout this test.

(c) Prepare a container of ice and water to provide a known temperature of 32 degrees F. This will be used to test the expansion valve in its "minimum flow" position.

**Under extreme conditions of high heat and humidity the temperature of the ice and water may not be reduced to 32 degrees F. Use a thermometer to test the actual temperature. If it is necessary to lower the temperature of the ice and water, add small quantities of salt while stirring until the desired temperature of 32 degrees F. is obtained.**

### *Maximum Flow Test— Thermal Bulb Warm*

(1) Warm the thermal bulb by holding it in your hand. This will produce the same effect as a warm evaporator . . . it will open the expansion valve for maximum flow.

(2) Open the **refrigerant manifold valve** (fully counterclockwise) to allow refrigerant vapor to flow to the gauge set manifold.

(3) Adjust the right-hand gauge set manifold valve to maintain **exactly** 75 psi on the discharge gauge.

(4) The suction gauge should register 60 to 70 psi for the front and rear units, however, the roof units should be 65 to 75 psi when pressure registered at the discharge gauge is maintained at exactly 75 psi.

MyMopar.com

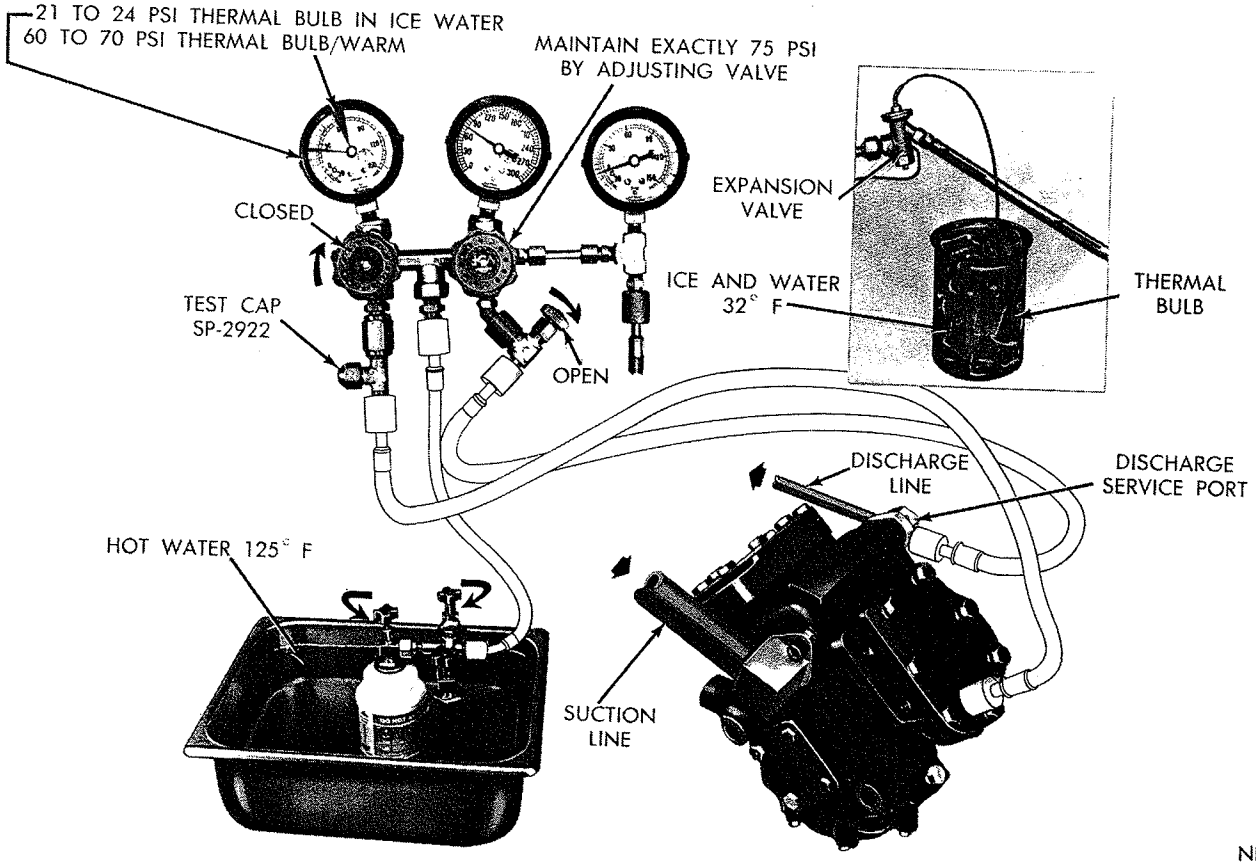


***Fig. 37—Expansion Valve Test (Valiant and Barracuda)***

### *Minimum Flow Test— Thermal Bulb At 32°F*

(1) Close right gauge valve to reduce pressure on the expansion valve. This will accelerate movement of the valve toward "minimum flow" position.

(2) Insert the thermal bulb in the container of ice and water. Use sufficient ice to insure a water temperature of 32°F. This will cause the expansion valve to move to the "minimum flow" position.

(3) Adjust right gauge valve to maintain **exactly** 75 psi as registered at discharge pressure gauge.

(4) The suction gauge should register 21 to 24 psi when discharge pressure is maintained at exactly 75 psi.

### *Test Results and Corrections*

If the expansion valve does not pass these tests, it must be replaced.

An expansion valve which passes the above tests has the proper super heat setting, the proper pressure limit calibration, the correct rated capacity and has not lost its thermal bulb charge, therefore, it will give satisfactory performance.

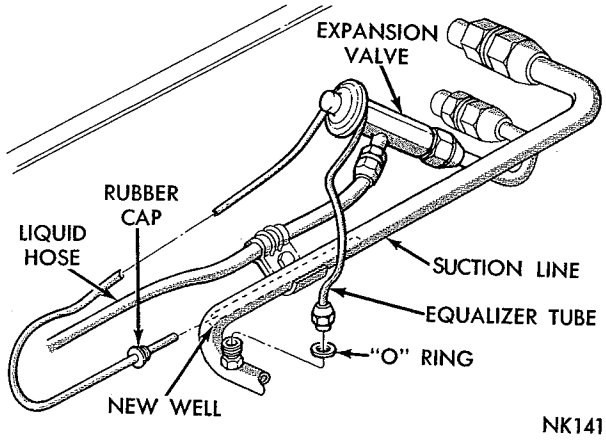


***Fig. 38—Expansion Valve Details (Typical)***

Since the system is without refrigerant, it is good practice to remove the expansion valve inlet screen, clean it if necessary and reinstall it before charging the system.

With a rubber seal on the capillary sensing tube, carefully insert the tube in the suction line well as far as it will go. (Approximately five inches) (Fig. 38).

## SERVICE PROCEDURES

### SAFETY PRECAUTIONS

The refrigerant used in all 1966 air-conditioning installations is Refrigerant 12. It is transparent and colorless in both the liquid and vapor state. Since it

MyMopar.com

has a boiling point of **21.7 degrees F. below zero,** it will be a vapor at all normal temperatures and pressures. The vapor is heavier than air, non-flammable and nonexplosive. It is nonpoisonous except when it is in direct contact with open flame. It is noncorrosive except when combined with water. It is a safe refrigerant. The following precautions, however must be observed when handling Refrigerant 12.

**CAUTION: Wear safety goggles when servicing the refrigeration system.**

Refrigerant 12 evaporates so rapidly at normal atmospheric pressures and temperatures that it tends to freeze anything it contacts. For this reason, extreme care must be taken to prevent any liquid refrigerant from contacting the skin and especially the eyes.

Always wear safety goggles Tool C-3355 when servicing the refrigeration part of the air-conditioning system. Keep a bottle of sterile mineral oil and a weak solution of boric acid handy when working on the refrigeration system. Should any liquid refrigerant get into the eyes, use a few drops of mineral oil to wash them out. Refrigerant 12 is rapidly absorbed by the oil. Next, wash the eyes with the weak solution of boric acid. Call your doctor immediately even though irritation has ceased after first aid treatment.

**CAUTION: Do not heat Refrigerant 12 above 125 degrees F.**

In most instances, moderate heat is required to bring the pressure of the refrigerant in its container above the pressure of the system when charging or adding refrigerant. A bucket or large pan of hot water not over 125 degrees F. is all the heat required for this purpose. Do not heat the refrigerant container with a blow torch or any other means that would raise temperature and pressure above this temperature. Do not weld or steam clean on or near the system components or refrigerant lines.

**CAUTION: Keep Refrigerant 12 containers upright when charging the system.**

When metering Refrigerant 12 into the refrigeration system, keep the supply tank or cans in an upright position. If the refrigerant container is on its side or upside down, liquid refrigerant will enter the system and damage the compressor.

**CAUTION: Always work in a well-ventilated room.**

Always maintain good ventilation in the working area. Always discharge the refrigerant into the service bay exhaust system or outside the building. Large quantities of refrigerant vapor in a small, poorly ventilated room can displace the air and cause suffocation.

Although Refrigerant 12 vapor is normally nonpoisonous, it can be changed into a very poisonous gas if allowed to come in contact with an open flame. Do not discharge large quantities of refrigerant in an area having an open flame. A poisonous gas is produced when using the flame-type leak detector. Avoid inhaling the fumes from the leak detector.

**CAUTION: Do not allow liquid refrigerant to touch bright metal.**

Refrigerant will tarnish bright metal and chrome surfaces. Avoid splashing refrigerant on any surface. Refrigerant in combination with moisture is very corrosive and can cause great damage to all metal surfaces.

## HANDLING TUBING AND FITTINGS

Kinks in the refrigerant tubing or sharp bends in the refrigerant hose lines will greatly reduce the capacity of the entire system. High pressures are produced in the system when it is operating. Extreme care must be exercised to make sure that all connections are pressure tight. Dirt and moisture can enter the system when it is opened for repair or replacement of lines or components. The following precautions must be observed.

The system must be completely discharged before opening any fitting or connection in the refrigeration system. Open fittings with caution even after the system has been discharged. If any pressure is noticed as a fitting is loosened, allow trapped pressure to bleed off very slowly. Use a suitable tube bender Tool C-3362 when bending the refrigerant lines to avoid kinking. **Never attempt to rebend formed lines to fit. Use the correct line for the installation you are servicing.**

A good rule for the flexible hose lines is keep the radius of all bends at least 10 times the diameter of the hose. Sharper bends will reduce the flow of refrigerant. The flexible hose lines should be routed so that they are at least 3 inches from the exhaust manifold. It is good practice to inspect all flexible hose lines at least once a year to make sure they are in good condition and properly routed.

"O" rings and fittings must be in good condition. The slightest burr or foreign material may cause a leak. "O" rings and fittings must be coated with refrigerant oil to allow the connections to seat squarely and to be tightened evenly to the proper torque. Fittings which are not oiled with refrigerant oil are almost sure to leak (Fig. 39).

The use of proper wrenches when making connections is very important. Improper wrenches or improper use of wrenches can damage the fittings. Always use two wrenches when loosening or tightening tube fittings to prevent distorting of lines and components.

The internal parts of the refrigeration system will remain in a state of chemical stability as long as pure-moisture-free Refrigerant 12 and refrigerant oil is used. Abnormal amounts of dirt, moisture or air can upset the chamical stability and cause operational

MyMopar.com

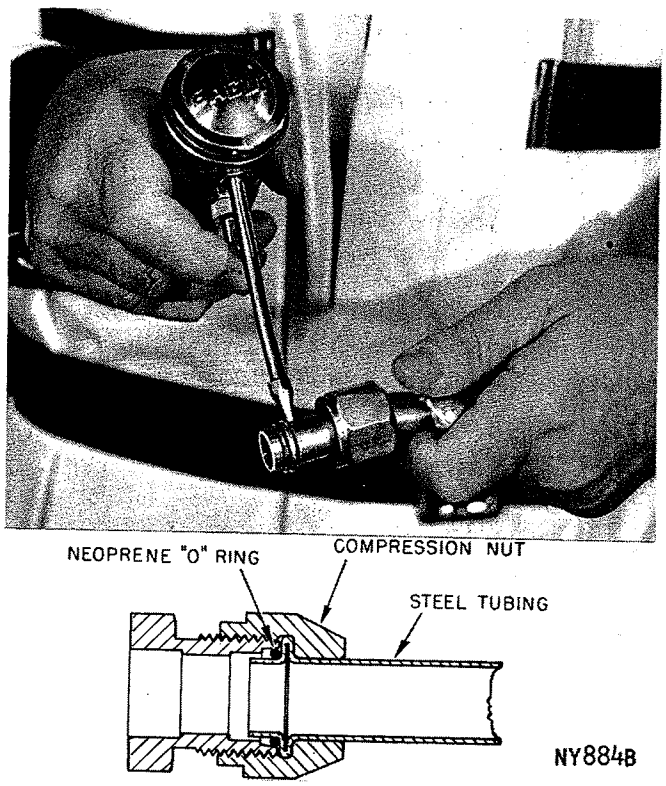


*Fig. 39—Lubricate with Refrigerant Oil (Typical)*

troubles or even serious damage is present in more than minute quantities.

When it is necessary to open the refrigeration system, have everything you will need to service the system ready so that the system will not be left open any longer than necessary. Cap or plug all lines and fittings as soon as they are opened to prevent the entrance of dirt and moisture. All lines and components in parts stock should be capped or sealed until they are ready to be used.

All tools, including the refrigerant dispensing manifold, the gauge set manifold and test hoses should be kept clean and dry.

The special refrigeration oil supplied for the system is as clean and dry as it is possible to make it. **Only refrigeration oil** should be used in the system or on the fittings and lines. The oil container should be kept tightly capped until it is ready for use, and then tightly capped after use to prevent entrance of dirt and moisture. Refrigerant oil will quickly absorb any moisture with which it comes in contact.

## COMPRESSOR DRIVE BELT ADJUSTMENT

Satisfactory performance of the air-conditioning system is dependent upon drive belt condition and tension. If the proper tensions are not maintained, belt slippage will greatly reduce air-conditioning performance and drive belt life. To avoid such adverse effects, the following service procedure should be followed:

(1) Any belt that has operated for a minimum of a half-hour is considered to be a "used" belt. Adjust air-conditioning drive belts at the time of new-car preparation. See Chart, "Accessory Belt Drives."

(2) Measure drive belt tension at regular service intervals using torque method, and adjust as needed.

(3) On all new-belt installations, new-belt tension specifications should be used when the belt is first installed to obtain proper tension. Thereafter, these replacement belts should be serviced according to the above procedure. Always replace belts in pairs if so equipped, otherwise the old belt will have insufficient tension and the load will be primarily on the new belt. See Chart, "Accessary Belt Drives."

## ANTIFREEZE RECOMMENDATIONS

The Air-Conditioning System requires the engine's cooling system to be protected to +15°F. with a permanent type antifreeze for summer operation. This is to prevent freezing of the coolant in the heater core.

However, this protection does not provide sufficient corrosion inhibitors for the engine cooling system. Summer protection to —15°F. will provide adequate inhibitors for protection of engine cooling system against corrosion.

In the springtime, after the winter's operation with the cooling system protected with permanent-type antifreeze for the temperatures of the area, it is suggested the system be drained and flushed out with water. When draining, flushing and refilling, have the temperature control lever in the extreme hot position so the heater core is drained, flushed and refilled. Install a gallon of permanent type antifreeze in the system, and add enough water to fill the system.

**Do not re-use the old antifreeze.** The permanent type antifreeze does not lose its antifreeze qualities during the winter season operation, but the chemical inhibitors for rust and corrosion prevention are weakened and finally exhausted by extended use. Do not add new inhibitor to used antifreeze in hope of revitalizing the used antifreeze.

The chemical inhibitors come in various chemical compositions, some are campatible, some neutralize each other, and some form violent reactions to each other causing foaming and other undesirable reactions. Play it safe and use new permanent-type antifreeze.

## RADIATOR PRESSURE CAP

All 1966 air conditioned vehicles must be equipped with a 15 to 16 psi radiator cap.

A radiator pressure cap testing below these specifications will permit loss of coolant during a hard pull on a hot day, or in slow moving traffic, or when the engine is stopped on a hot day.

Test the radiator pressure cap, using Tool C-3499 (Fig. 40). Before assembling adapter and radiator pressure cap to the pump, dip radiator cap and both

MyMopar.com

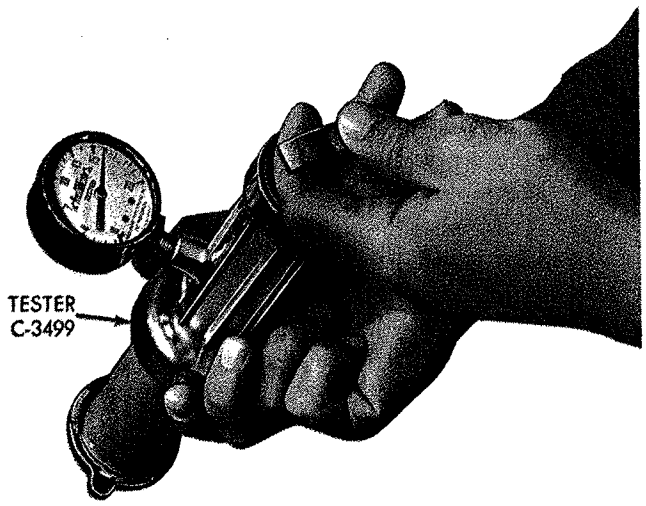


*Fig. 40—Radiator Cap Tester*

ends of adapter into clean water to assure a tight seal.

Hold the assembled tester in avertical position with the radiator cap downward, as shown in Figure 40. Stroke the tester pump plunger until the gauge indicates the pressure cap is relieving pressure. It must relieve at a pressure between 15 to 16 psi. If within these specifications, reinstall on the raidator.

**These test specifications are for caps tested at average altitudes. In high altitudes, the test specifications are lowered about one (1) psi for each 2,000 feet above sea level.**

If the radiator cap does not test within these specifications, replace it with a cap that does.

## VACUUM CONTROL SYSTEM ADJUSTMENTS AND TESTS ("Fury" Installation)

### *Linkage Adjustment*

With the air conditioner door in the full open position and vacuum applied to the top of the air condi-

# ACCESSORY BELT DRIVES

## TORQUE METHOD

### Torque (Ft.-Lbs.) to be applied to components

| ACCESSORY | USED BELT* | | | | | NEW BELT | | | | |
|---|---|---|---|---|---|---|---|---|---|---|
| MODEL APPLICATION | 170 Cu. In. | 225 Cu. In. | 273 Cu. In. | 318 Cu. In. | 361-383 426 Cu. In. | 170 Cu. In. | 225 Cu. In. | 273 Cu. In. | 318 Cu. In. | 361-383 426 Cu. In. |
| POWER STEERING BRACKET | | | | | | | | | | |
| Solid Bracket | 45 | 45 | 50 | 50 | 55 | 80 | 80 | 85 | 85 | 90 |
| Self Tightening | | | | | 45 | | | | | 45 |
| ALTERNATOR | | | | | | | | | | |
| With Air Conditioning | 15 | 15 | 30 | 30<br>45** | 40 | 20 | 20 | 50 | 50<br>70** | 60 |
| Without Air Conditioning | 15 | 15 | 30 | 30<br>25** | 40 | 20 | 20 | 50 | 50<br>35** | 60 |
| A/C IDLER BRACKET | 25 | 25 | 55 | 55 | | 35 | 35 | 55 | 75 | |
| FAN IDLER | | | | 55** | 35 | | | | 85** | 50 |

*Any belt that has operated for a minimum of a half-hour is considered to be used
**Fury models only.

## BELT DEFLECTION METHOD

### DEFLECTION (INCHES) TO BE APPLIED AT MIDPOINT OF BELT SEGMENT UNDER A 5 LB. LOAD

| ACCESSORY | USED BELT | | | | | NEW BELT | | | | |
|---|---|---|---|---|---|---|---|---|---|---|
| | 170 Cu. In. | 225 Cu. In. | 273 Cu. In. | 318 Cu. In. | 361-383 426 Cu. In. | 170 Cu. In. | 225 Cu. In. | 273 Cu. In. | 318 Cu. In. | 361-383 426 Cu. In. |
| POWER STEERING | 1/8 | 1/8 | 1/8 | 1/8 | 3/16 | 1/16 | 1/16 | 1/16 | 1/16 | 1/8 |
| FAN BELT IDLER | — | — | — | 1/16** | 1/8 | — | — | — | 1/16** | 1/16 |
| A/C IDLER BRACKET | 1/8 | 1/8 | 1/8 | 1/8 | | 1/16 | 1/16 | 1/16 | 1/16** | |
| ALTERNATOR | | | | | | | | | | |
| Without A/C | 1/4 | 1/4 | 1/4 | 1/4 | 1/4 | 5/32 | 1/8 | 1/8 | 1/8 | 1/8 |
| With A/C | — | 1/4 | 1/4* | 1/4* | 3/8 | 1/8 | 1/8 | 1/8* | 1/8* | 1/4 |
| | — | — | 3/8** | 3/8** | — | — | — | 1/4** | 1/4** | — |

*Single Belt
**Dual Belt

MyMopar.com

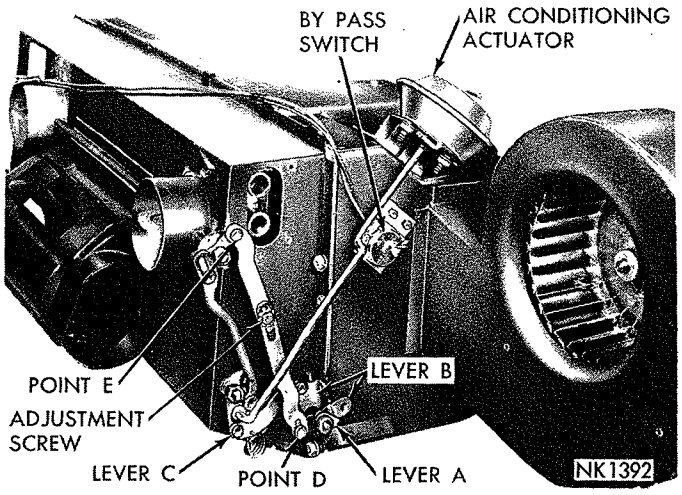


*Fig. 41—Linkage Nomenclature*

tioner and heater door vacuum actuators, raise the heater door vacuum actuator mounting bracket until the levers **A, B,** and **C** touch; then, tighten the bracket mounting nuts (Fig. 41).

Apply vacuum to shaft side of air conditioner door vacuum actuator and with vacuum applied to top side of heater door vacuum actuator, apply pressure at points **D** and **E** and tighten adjustment screw.

### By-Pass Switch Adjustment

With vacuum applied to the top of the actuator to open air conditioner door. The blower motor resistor by-pass switch must be adjusted so the vacuum actuator shaft will engage the switch lever, moving it to the open position with vacuum applied to rod side. (Fig. 42 switch shown in the closed (on) position.)

### Vacuum Control System Test

The test of the push-button operation determines whether or not the vacuum and electrical circuits are properly connected and the controls are functioning properly. However, it is possible that a vacuum control system that operates perfectly at the high vacuum provided at engine idle speed may not function properly at high engine speeds. Before starting this test, stop engine and make certain the vacuum source hose at engine intake manifold is tight on its connector.

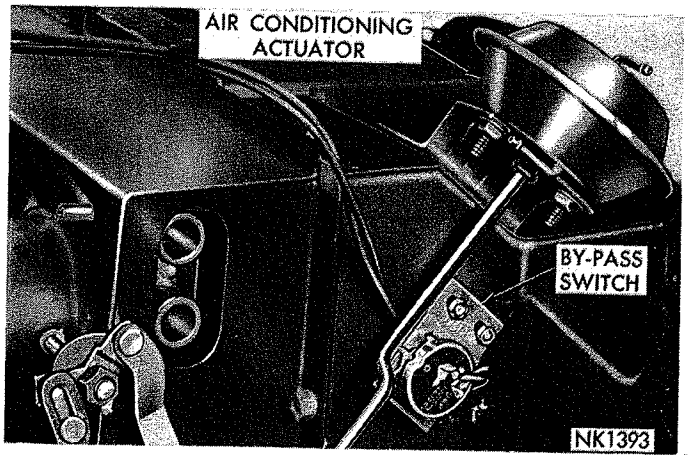


*Fig. 42—By-Pass Switch Adjustment*

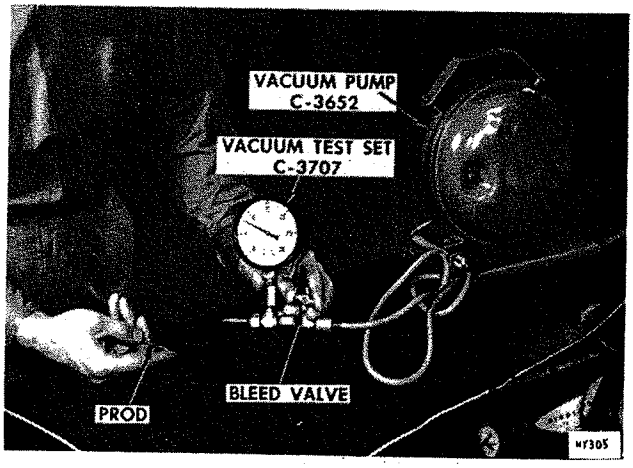


*Fig. 43—Adjust Vacuum Test Bleed Valve*

Start vacuum pump (Tool C-3652) and connect to the vacuum test set (Tool C-3707). Adjust bleed valve on test set to obtain exactly 8 inches of vacuum with a finger blocking the prod on end of test hose (Fig. 43).

It is absolutely essential that the bleed valve be adjusted so the vacuum gauge pointer will return to exactly 8 inches when the prod is covered by a finger. Otherwise a false reading will be obtained when the control circuit is tested.

**CAUTION: Alternately release and reblock the hose prod several times. Make sure the bleed valve is adjusted so the vacuum gauge pointer returns to exactly 8 inches of vacuum when the prod is covered with a finger.**

Disconnect engine vacuum source hose at engine

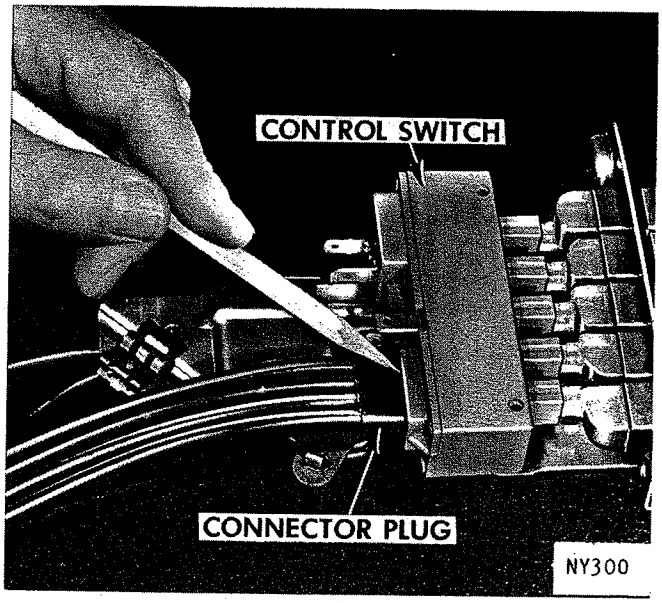


*Fig. 44—Push Button Vacuum Test*

MyMopar.com

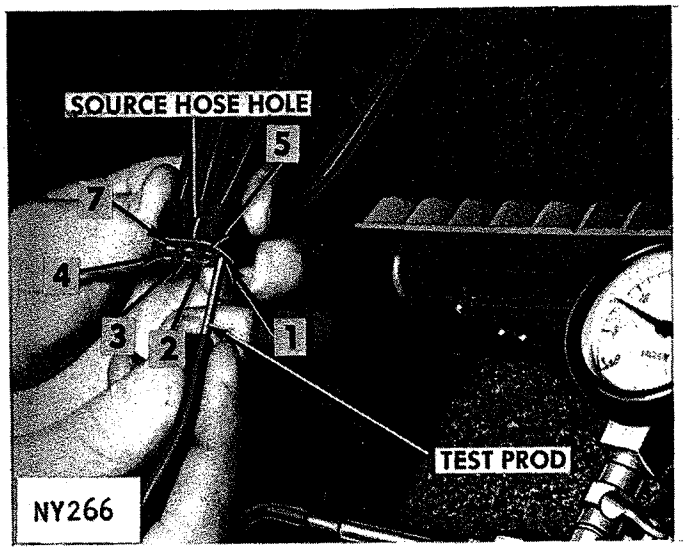


*Fig. 45—Vacuum Tube Assembly Test*

intake manifold and insert vacuum tester hose prod into source hose leading to control switch. Place vacuum gauge on the cowl so it can be observed from the driver's position as push buttons are operated.

Start the test by pushing the "H" or heat button. Vacuum tester gauge needle will drop until the actuator has operated, and then will return to 8 inches. Note how much the vacuum drops below 8 inches. Continue to push buttons; "Off," "Max," "Cool," "Fresh Cool," "Defrost" and "Heat" allowing time for actuators to operate after each button is pushed, and note the vacuum drop below 8 inches after each operation. The maximum allowable vacuum drop below 8 inches after each operation is ¾ inch.

If the vacuum drop is more than ¾ inch, first recheck the tester for reading exactly 8 inches. If correct, inspect the fit of the 7-hole hose connector plug

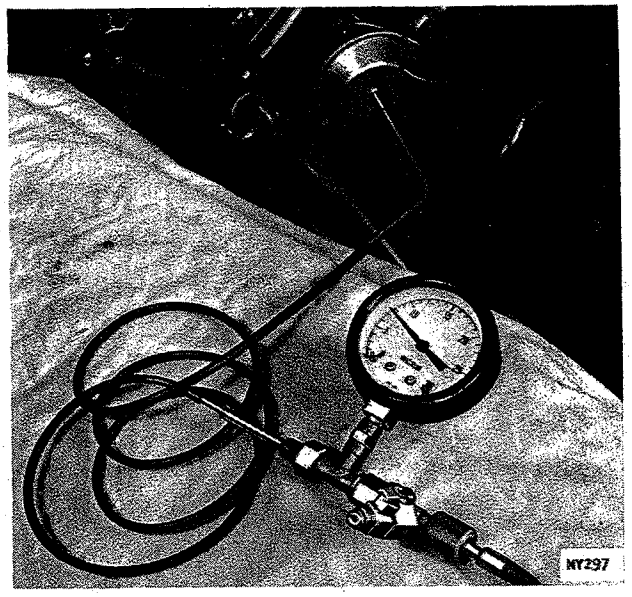


*Fig. 46—Vacuum Actuator Test*

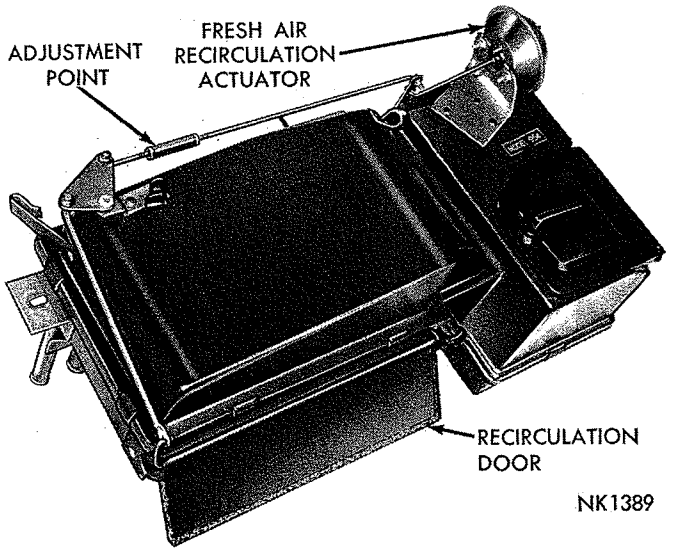


*Fig. 47—Recirculating Door Linkage*

on the control switch (Fig. 44). This plug must be positioned all the way on the 7 prods on the control switch.

**CAUTION: Do not use lubricant on the switch prods or in the holes in the plug, as lubricant will ruin the vacuum valve in the switch. If it is impossible to properly position the connector plug all the way on the switch prods, put a drop or two of clean water in the holes of the connector plug. This will allow the plug to slide completely on the switch prods.**

If vacuum drop is now within limits, proceed with the over-all performance test. If vacuum drop is still in excess of ¾ inch, remove connector plug from the switch. Insert the vacuum test prod alternately in each of the connector holes except the source hose connector hole (Fig. 45). Note amount of vacuum drop **below** 8 inches after each actuator has operated. If vacuum test gauge comes back to 8 inches at each of the 6 holes, the hoses and actuators are not leaking. The control switch is faulty and must be replaced. If

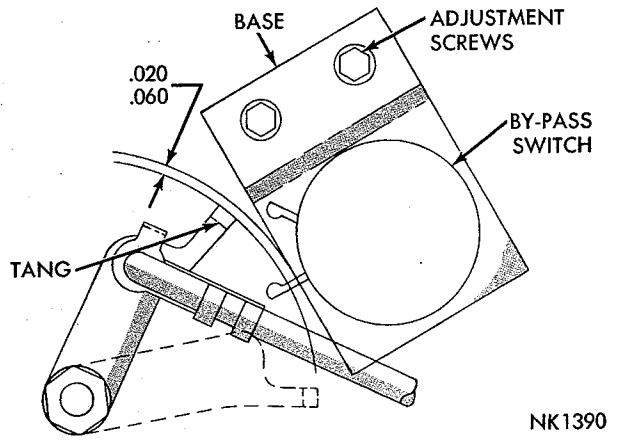


*Fig. 48—By-Pass Switch Adjustment*

MyMopar.com

excessive vacuum drop shows up at one or more holes in connector block, isolate faulty hose or actuator.

Inspect hose connections to the actuator involved. Then test whether actuator or hose is at fault; use the test hose on the actuator involved (Fig. 46).

A leak in a hose may be detected with leak tester by running the fingers along the hose and watching vacuum gauge reading. A faulty spot may be cut out and the hose spliced, using ⅛ inch 00 copper tubing.

A vacuum drop in excess of ¾ inch below the 8 inches needed in this test would not interfere with the engine operation, other than perhaps to cause a rough idle. It could, however, interfere with the proper operation of the air-conditioning and heating controls at high speeds and during acceleration.

## VACUUM CONTROL SYSTEM ADJUSTMENTS AND TESTS

### *(Valiant and Barracuda Installations) Recirculating Door Linkage*

To adjust the recirculation door, remove the glove box, push the "Max A/C" (Maximum Air Conditioning) button in. Vacuum will then be applied to the top of the fresh air recirculation actuator closing the fresh air door, opening the recirculating door (Fig. 47).

The top connecting rod has a turnbuckle nut and lock nut. The length of the rod can be adjusted by using two 7/16 inch open-end wrenches. The recirculating door should be adjusted to give the **maximum** possible opening when the fresh air door is completely closed. Push in the "A/C" (Air Conditioning) button and inspect to see that the recirculating door has moved to its fully closed position. Install the glove box.

### *By-Pass Switch Adjustment*

With vacuum applied to the rod side of the inlet door actuator, the blower motor resistor by-pass switch must be adjusted so that the vacuum actuator shaft will engage the switch lever, with .020 to .060 inch clearance between the inlet door tang and the switch base, moving the switch lever to the closed (on) position with vacuum applied to the top of the actuator. (Fig. 48 switch shown in the open (off) position.)

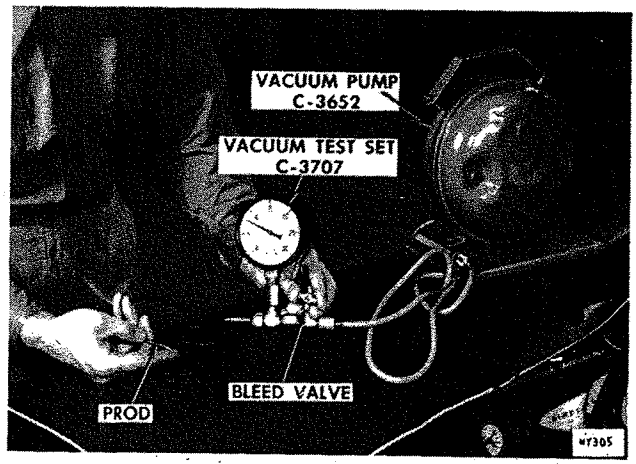


*Fig. 49—Adjust Vacuum Test Bleed Valve*

### *Vacuum Control System Test*

The test of the push-button operation determines whether or not the vacuum and electrical circuits are properly connected and the controls are functioning properly. However, it is possible that a vacuum control system that operates perfectly at the high vacuum provided at engine idle speed may not function properly at high engine speeds. Before starting this test, stop the engine.

Start the vacuum pump, Tool C-3652, and connect to the vacuum test set, Tool C-3707. Adjust the bleed valve on the test set to obtain exactly 8 inches of vacuum, with a finger blocking the prod on the end of the test hose (Fig. 49).

It is absolutely essential that the bleed valve be adjusted so the vacuum gauge pointer will return to exactly 8 inches when the prod is covered by a finger Otherwise a false reading will be obtained when the control circuit is tested.

**CAUTION: Alternately release and reblock the hose prod several times. Make sure the bleed valve is adjusted so the vacuum gauge pointer returns to exactly 8 inches of vacuum when the prod is covered with a finger.**

Disconnect the engine vacuum source hose at the engine intake manifold and insert the vacuum tester hose prod into the source hose leading to the control switch. Place the vacuum gauge on the cowl so it can be observed from the driver's position as the push buttons are operated.

Start the test by pushing the "Def" (Defroster) button. The vacuum tester gauge needle will drop until

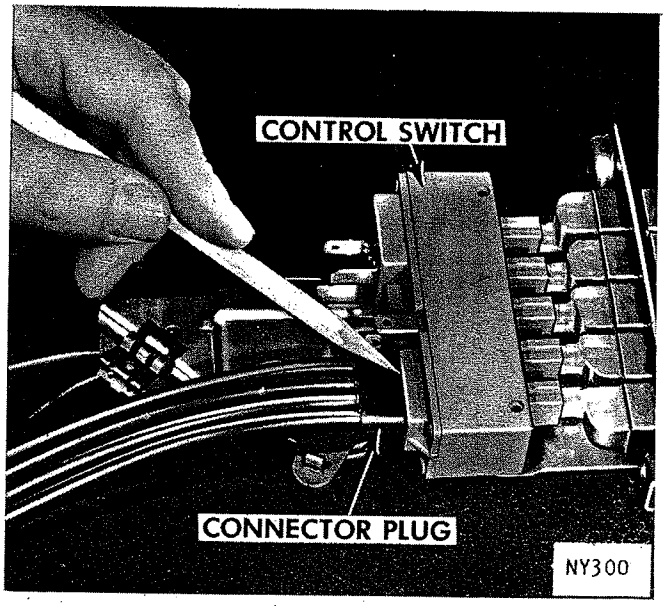


*Fig. 50—Connector Plug Installed*

MyMopar.com

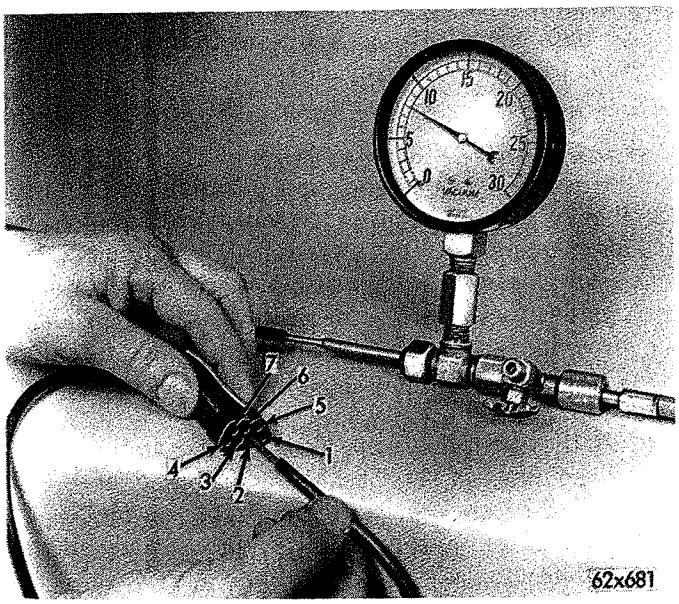


*Fig. 51—Vacuum Tube Assembly Test*

1. Fresh Air Door Closed
2. Defroster Door Open
3. Fresh Air Door Open
4. Defroster Door Closed
5. A/C Inlet Door Closed
6. Vacuum Source
7. A/C Inlet Door Open

the actuator has operated, and then will return to 8 inches. Continue to push button "Heat," "A/C," "Max A/C," and "Off" allowing time for actuators to operate after each button is pushed, and note the vacuum drop below 8 inches after each complete operation. The maximum allowable vacuum drop is ¾ inch after each complete operation.

If the vacuum drop is more than ¾ inch, first recheck the tester for reading exactly 8 inches. If correct, inspect the fit of the 7-hole connector plug on the control switch (Fig. 50). This plug must be positioned all the way on the 7 prods on the control switch.

**CAUTION: Do not use lubricant on the switch prods or in the holes in the plug, as lubricants will ruin the vacuum valve in the switch. If it is impossible to properly position the connector plug all the way on the switch prods, put a drop or two of clean water in the holes of the connector plug. This will allow the plug to slide completely on switch prods.**

If vacuum drop is now within limits, proceed with TEST 1, "Test System Pressure." If vacuum drop is still in excess of ¾ inch, remove connector plug from switch. Insert the vacuum test prod alternately in each of the connector holes except the source hose connector hole (Fig. 51). Note the amount of vacuum drop below 8 inches after each actuator has operated. If the vacuum test gauge comes back to 8 inches at each of the 6 holes, the hoses and actuators are not leaking. The control switch is faulty and must be replaced. If excessive vacuum drop shows up at one or more holes in the connector plug, isolate the faulty hose or actuator.

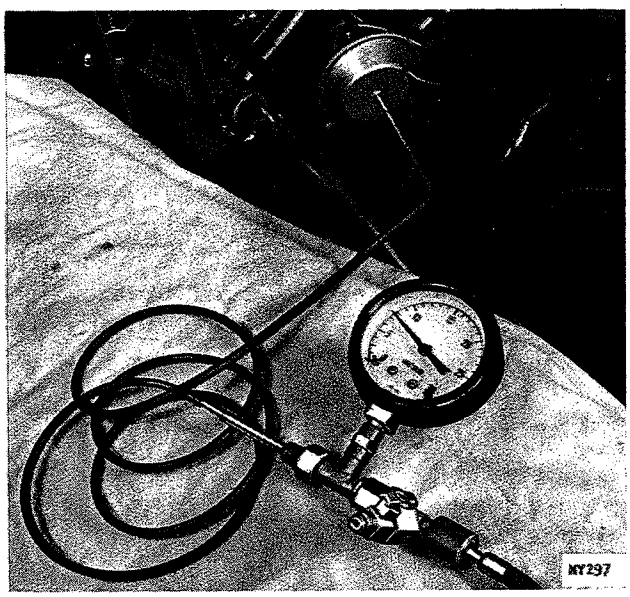


*Fig. 52—Vacuum Actuator Test*

If the vacuum drop occurs at number 5 or 7 holes, first check the tee connectors under the instrument panel that tie numbers 5 and 7 to 8 and 9 respectively. Number 8 and 9 hoses operate the water valve actuator. Test whether the actuator or hose is at faulty; use the test hose on the actuator involved (Fig. 52).

## MAGNETIC CLUTCH

Two types of magnetic clutches (Figs. 53 and 54) are used for 1966 models. Both use a stationary electromagnet attached to the compressor. Since the electromagnet does not rotate, collector rings and brushes are eliminated.

### *Testing Electromagnet Current Draw*

To test the coil for a short or open circuit, connect

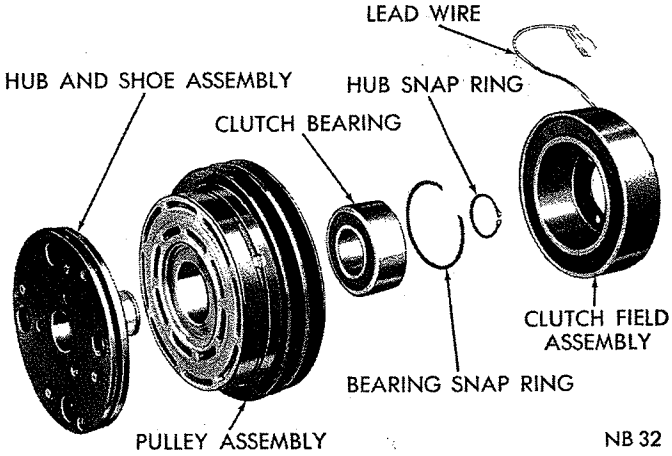


*Fig. 53—Warner Clutch Plate Type*

MyMopar.com

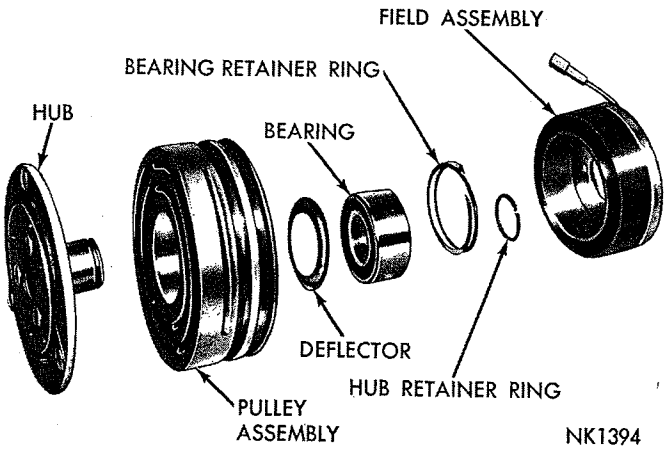


*Fig. 54—Pitts Electro-Loc Clutch*

an ammeter (0-10 ampere scale) in series with a fully charged 12 volt battery and the field coil lead. The current draw at 12 volts and 68° temperature should be as follows:

2.7 to 3.3 amperes for Warner Plate Type
2.9 to 3.3 amperes for Pitts (Electro-Loc)

### Removal (All)

(1) Loosen and remove the belts. Disconnect clutch field lead wire at the connector.

(2) Remove the special locking bolt and the washer from the compressor crankshaft at the front center of the clutch.

(3) Insert a 5/8"-11 × 2½" cap screw into the threaded portion of the hub assembly.

(4) Support clutch with one hand, then tighten cap screw until clutch is removed.

(5) Remove the three hexagon head screws attaching the clutch field assembly to the compressor and lift off the assembly.

### Installation (All)

(1) Install clutch field coil assembly on the base of compressor bearing housing. Make sure coil assembly is positioned so lead wire points to left of compressor as viewed from the front. Install the three mounting screws and tighten to 17 inch-pounds.

(2) Insert woodruff key in the crankshaft.

(3) Insert clutch assembly on crankshaft.

(4) Install washer and a new self-locking bolt, and tighten to 20 foot-pounds.

(5) Connect field lead wire.

(6) Install belts and tighten to the specified tension shown on page 32 in this manual.

## WARNER PLATE TYPE AND PITTS ELECTRO-LOCK

### Disassembly

(1) Remove the small snap ring from the drive hub with Tool C-3128 or equivalent.

(2) On Warner Plate Type, install drive hub puller

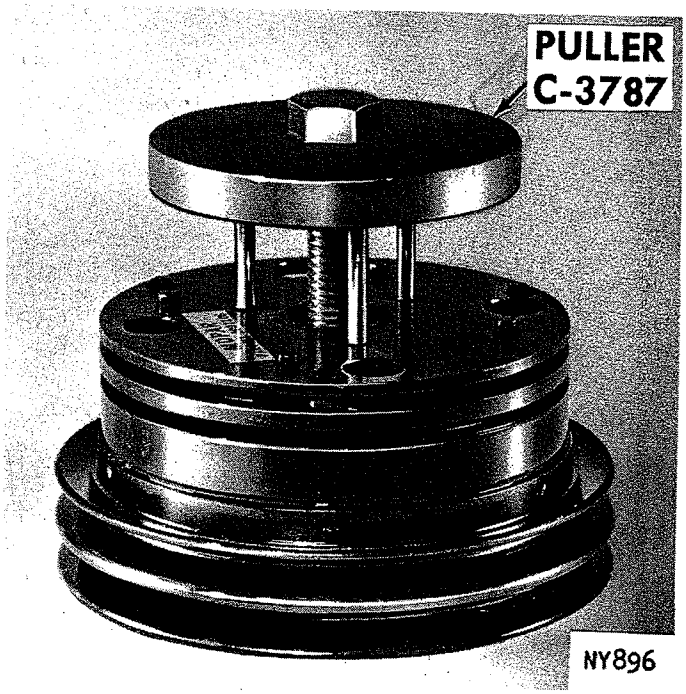


*Fig. 55—Removing the Hub and Shoe Assembly*

Tool C-3787 aligning the three pins of the Tool in the three holes in the hub and shoe assembly. Tighten the hex head bolt down until the drive hub is removed from the bearing (Fig. 55).

(b) On Pitts Electro-Loc, install a bolt 5/8-11 × 2½ inch into the rear of the hub and while holding the pulley in the hand use a soft hammer and drive hub from the pulley.

(3) Remove bearing snap ring from pulley.

(4) Place pulley assembly on an arbor press, with pulley side down, and bearing hub centered on Tool C-3835. Install Tool SP-3496 on inner race of bearing and press the bearing from pulley assembly (Fig. 56).

**A new bearing must be installed every time the magnetic clutch is disassembled.**

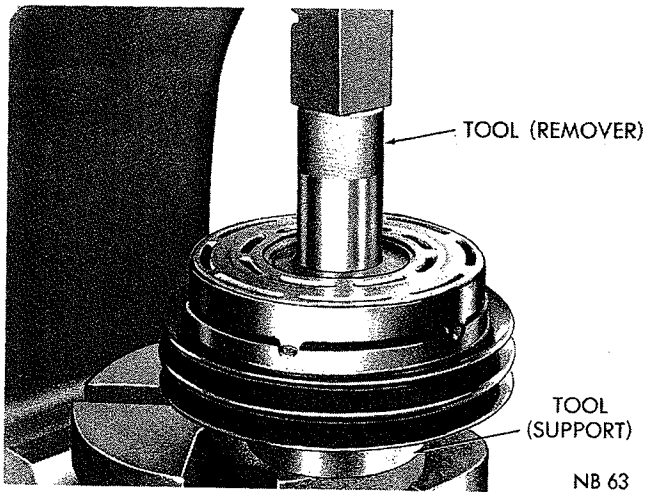


*Fig. 56—Removing the Bearing from the Pulley Assembly*

MyMopar.com

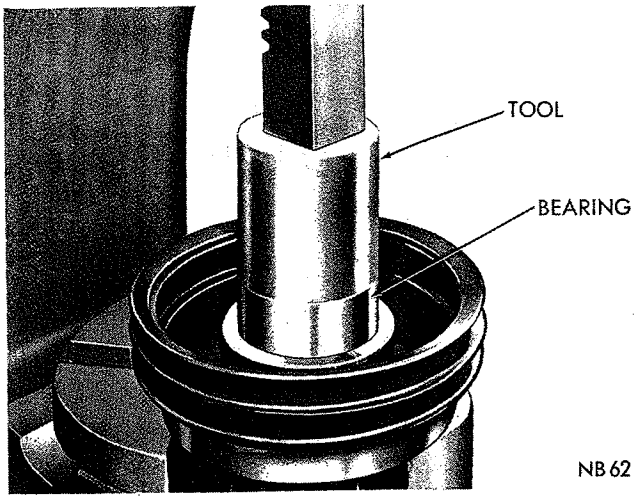


*Fig. 57—Installing a New Bearing in the Pulley Assembly (Typical)*

### *Assembly*

(1) Install pulley assembly with pulley side up on an arbor press and insert a **new** bearing into the bore. Install Tool C-3807 against the bearing and press into position (Fig. 57).

(2) Install pulley assembly with pulley side facing down on Tool C-3807.

(3) Start drive hub into the inner bearing race, and press hub into position with an arbor press.

(4) Install bearing snap ring and hub snap ring.

**CAUTION: The pulley assembly and hub assembly are mated parts. They are burnished at the factory before shipment. No attempt should be made to replace either unit separately as this may reduce the initial torque of the clutch.**

## SERVICING THE COMPRESSOR

The compressor is a two-cylinder, reciprocating-type designed specifically for the Chrysler Air-Conditioning System. Service parts are available so that the compressor can be repaired in the field.

Figure 58 is a disassembled view of the compressor with the nomenclature of the parts. Some parts are serviced individually and some are serviced in packages which include two or more service parts. Refer to the parts book for this information.

**CAUTION: The refrigerant oil used in the compressor is carried through the entire system by the refrigerant. Some of this oil will be trapped and retained in the system when the refrigerant is discharged for test-**

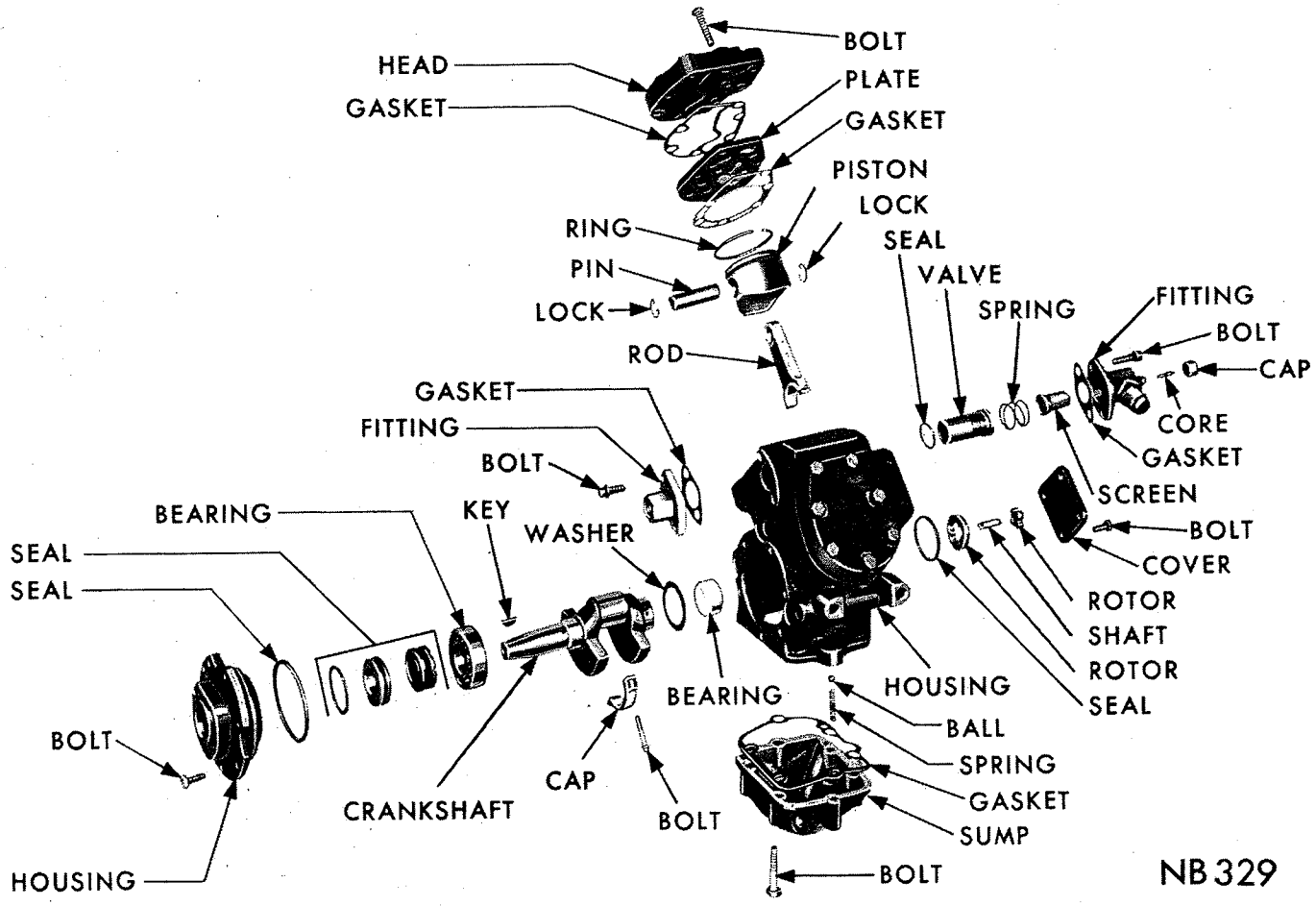


*Fig. 58—Compressor Disassembled*

MyMopar.com

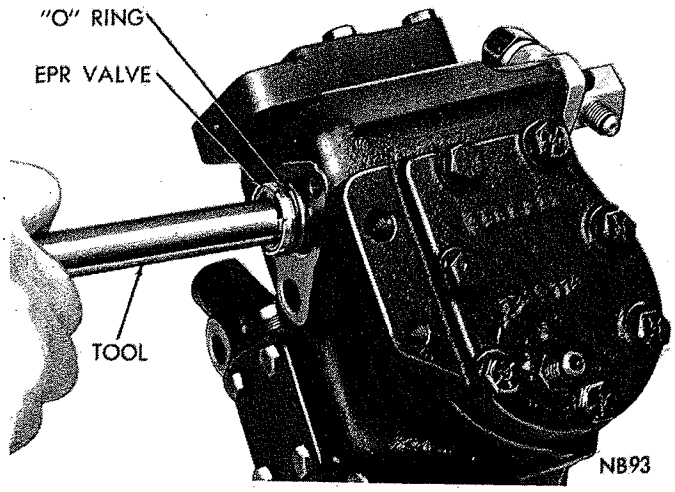


*Fig. 59—Removing the EPR Valve*

**ing or unit replacement. If the compressor is to be removed for repair or replacement, measure the refrigerant oil level in the compressor before the compressor is removed from the vehicle so that the same oil level can be established when the new or repaired compressor is installed on the vehicle. Too much refrigerant oil level in the compressor before the coming pressures and reduce the performance of the entire system.**

Complete disassembly and assembly of the compressor must be performed with the compressor removed from the vehicle. On some models however, the valve plate and crankshaft gas seal assemblies can be repaired with compressor installed on vehicle.

**CAUTION: The system must be completely discharged before attempting to perform any disassembly or repair service to the compressor.**

Before disassembling the compressor, clean exterior surfaces thoroughly.

Cleanliness is extremely important. The work area must be clean and free of air-borne dust and dirt. All parts must be thoroughly cleaned and blown dry before reassembly.

Do not use air to dry the crankshaft front main bearing. Wash bearing in **clean** mineral spirits and shake out all excess cleaning fluid. Saturate bearing with **clean refrigerant oil** and assemble immediately. Any dirt in the front main bearing assembly will cause noisy operation and possible damage to bearing.

**CAUTION: Before reassembly of any unit, all contact surfaces must be liberally coated with clean refrigerant oil. Refrigerant oil must be kept in a sealed container until ready for use to prevent entrance of moisture and dirt. Never use engine oil as a substitute for refrigerant oil.**

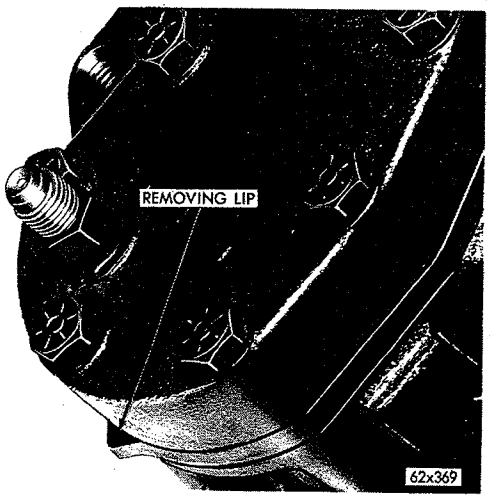


*Fig. 60—Valve Plate and Head Removing Lip*

## EPR VALVE

### *Removal*

(1) Remove the two "EPR" Valve suction line fitting bolts, the fitting which also contains the compressor suction screen, spring, and the gasket.

(2) Remove the "EPR" Valve and "O" ring from the compressor using Tool C-3822, by rotating the valve counterclockwise slightly, Fig. 59.

**CAUTION: Do not handle the "EPR" Valve more than necessary. The valve should be inspected externally and wiped clean with a lint-free cloth. Place the valve in a plastic bag until ready to be installed.**

### *Installation*

(1) Install new "O" ring on the "EPR" Valve.

(2) Lubricate "O" ring with refrigerant oil and install "EPR" Valve in the compressor with Tool C-3822 while rotating the valve counterclockwise.

(3) Install compressor suction screen in the "EPR" Valve suction line fitting.

(4) Install suction line fitting gasket, spring, fitting, and the attaching bolts.

## COMPRESSOR

### *Removal*

(1) Discharge the system. (Refer to "Discharging the System.")

(2) Measure and record the refrigerant oil level so that the oil level of a replacement or repaired compressor can be adjusted to the **exact level in the compressor removed from the vehicle.**

(3) Disconnect suction line from suction muffler and the discharge line from the muffler fitting.

**CAUTION: Plug or cap all the lines as soon as they are disconnected to keep the moisture out of the system.**

(4) Disconnect the magnetic clutch-to-control-unit wire.

(5) Loosen and remove compressor pulley belts.

(6) Remove the compressor-to-bracket attaching bolts, and remove compressor.

MyMopar.com

### Installation

(1) Install the compressor to the bracket, and tighten the attaching bolts.

(2) Install compressor pulley belts.

(3) Connect magnetic clutch-to-control-unit wire.

(4) Remove the caps or plugs and connect the suction line to the section muffler and connect discharge line to the muffler fitting.

**CAUTION: When replacing the compressor assembly, the crankshaft should be rotated by hand at least two complete revolutions to clear oil accumulation from the compressor head before the clutch is energized to avoid damaging the compressor reed valves. IMPORTANT: After the compressor is installed on the engine, the oil level must be adjusted to the level recorded before removing the compressor. If the original oil level is not known, adjust to the following chart:**

| Depth | Cubic Inch Engine | Vehicle Model |
|---|---|---|
| 2 inches* | 170-225-273 | Valiant and Barracuda |
| 2 inches* | 318 | Fury |
| 2⅜ inches* | 225 | Fury |
| 2¾ inches* | 361-383-426 | Fury |

*Measured through crankcase oil filler opening.

## CYLINDER HEAD AND VALVE PLATE ASSEMBLY

### Removal

(1) Remove the cylinder head bolts, head and valve plate assembly. If plate does not separate from head, tap the removing lip on the valve plate lightly with a plastic hammer (see Figure 60). Do not pry apart.

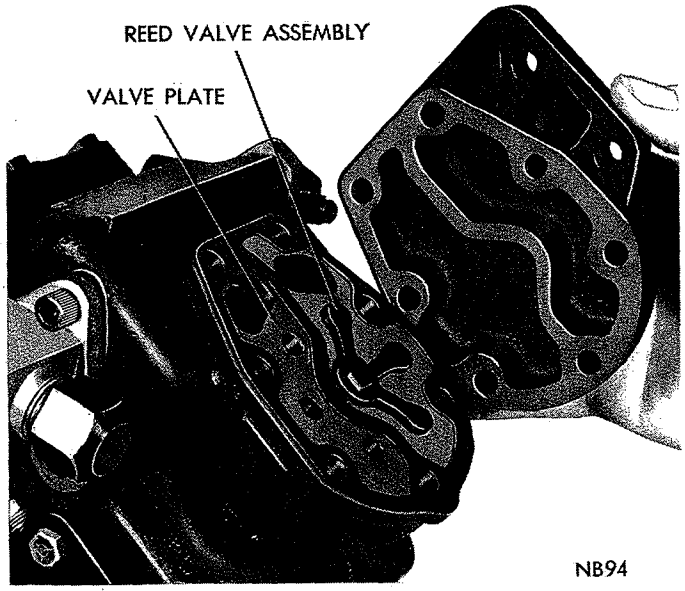


*Fig. 61—Valve Plate—Installed Position*

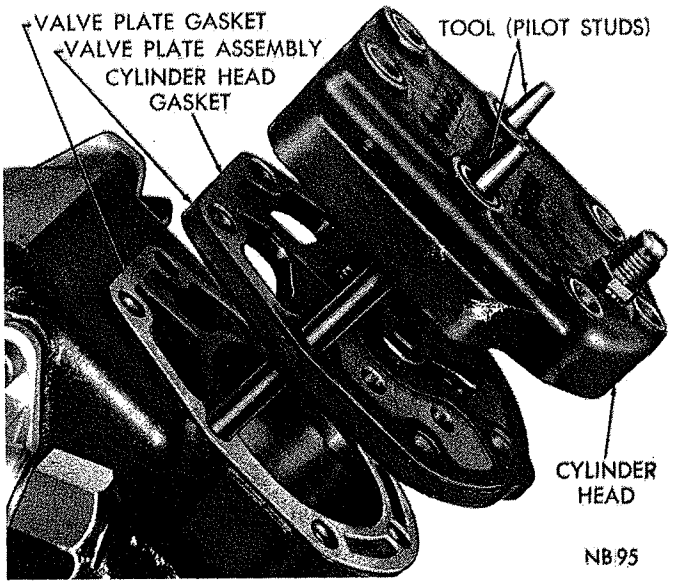


*Fig. 62—Installing the Valve Plate and the Cylinder Head*

### Inspection

After removal of head, plate and gaskets, examine the valves. If valves are broken and the damage extends to cylinder bores, examine bores to see if they can be repaired by removing light scoring, scuffing or scratches with a crocus cloth. After conditioning cylinder bores, clean surfaces of cylinder block, valve plate and head thoroughly with mineral spirits.

Use care to remove all shreds of old gasket from plate, block and head surfaces. Clean attaching stud holes in the block. If valve plate or cylinder head is damaged, replace, using a complete compressor valve plate replacement package.

**CAUTION: Do not touch or pry the reed valves.**

### Installation

(1) The valve plate and the cylinder head must be assembled with the reed assembly (Fig. 61).

(2) Dip the gaskets in clean refrigerant oil. **Do Not Soak.** Using the pilot studs as a guide, install the valve plate gasket, valve plate, cylinder head gasket and cylinder head, as shown in Figure 62.

(3) Install the attaching bolts. Tighten each bolt alternately and evenly 23 to 27 foot-pounds.

## PISTON AND CONNECTING ROD

### Removal

(1) Drain oil from compressor.

(2) Remove sump attaching bolts.

(3) Separate the sump from the case by tapping with a plastic hammer being careful not to distort the oil pressure relief spring.

(4) Remove oil relief spring and (rubber) ball from crankcase.

(5) Remove cylinder heads and valve plates.

MyMopar.com

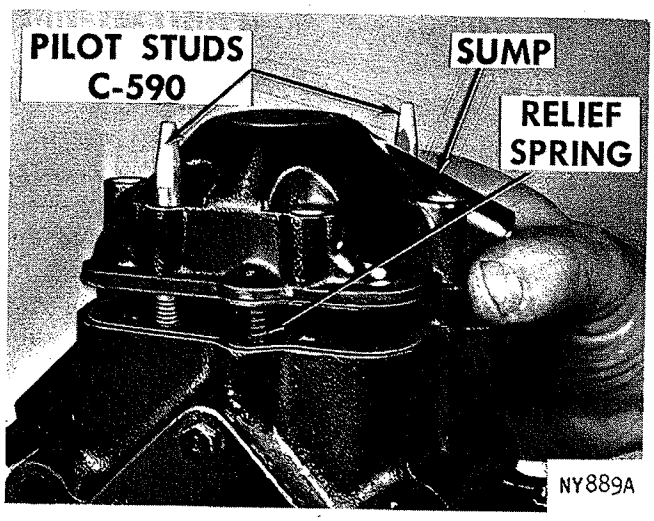


*Fig. 63—Installing the Sump*

**Before removing the pistons, rods or rod caps, mark all parts to insure reassembly in the original position.**

(6) Remove rod caps; remove piston and rod assembly from cylinder.

### Inspection

Inspect piston and rings for score marks. Inspect rod bearing for pits and for chipping. Replace parts if damaged.

### Installation

(1) Remove bearing cap and install piston in bore. Use piston ring compressor to prevent ring damage.

(2) Install bearing caps, and tighten screws 52 to 56 inch-pounds. Be sure each cap is installed in its original position.

(3) Install valve plates and cylinder heads.

(4) Turn compressor upside down. Install pilot studs, gasket, oil pressure relief ball and spring.

(5) Install the sump over pilot studs (Fig. 63), making sure the oil pressure relief spring depresses uniformly as the sump is lowered on the case.

(6) Tighten sump bolts finger tight to prevent spring misalignment, then tighten 15 to 19 foot-pounds.

(7) Refill with new refrigerant oil after the compressor is installed on vehicle. Do not re-use the oil that was previously drained.

## CRANKSHAFT BEARING HOUSING AND GAS SEAL

### Removal

(1) Remove crankshaft bearing housing seal bolts.

(2) Remove bearing housing from crankcase, using two screwdrivers inserted in the slots provided to pry housing from the case (Fig. 64).

(3) Remove crankshaft bearing housing gas seal seat plate from bearing housing. This is part of the gas seal replacement package and must be replaced when the gas seal assembly is replaced.

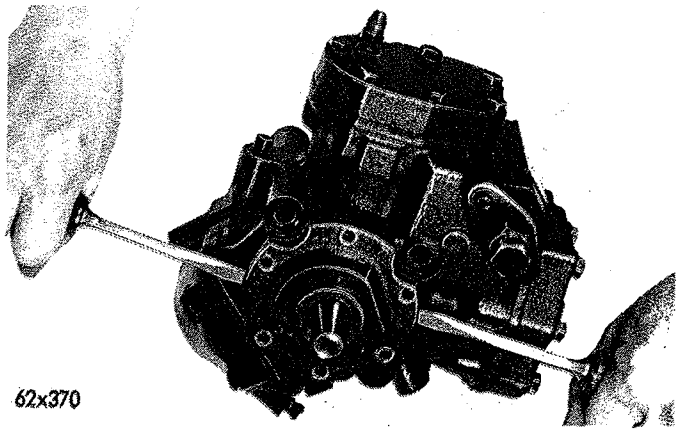


*Fig. 64—Removing the Crankshaft Bearing Housing*

(4) Remove gas seal from crankshaft.

### Installation

The crankshaft gas seal replacement package consists of the crankshaft gas seal assembly and crankshaft bearing housing seal seat plate. Two types of crankshaft seals are supplied for service, as shown in Figure 65. If replacement package contains the cartridge-type seal, follow the entire installation procedure given below. If replacement package contains the unitized-type seals, steps 1, 2 and 4 will not apply.

(1) Before installing the cartridge-type gas seal assembly, inspect the assembly to make sure that tangs index in slots of mating part. This will insure proper spring action. The carbon seal must be assembled as shown in Figure 65.

(2) Hold seal firmly on the outside edge to prevent it from rotating out of the index slots. **Do not touch sealing face of carbon seal.**

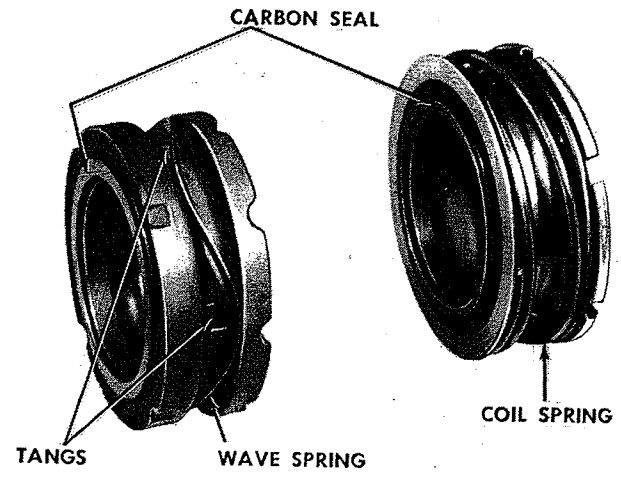


*Fig. 65—Gas Seal Identification*

MyMopar.com

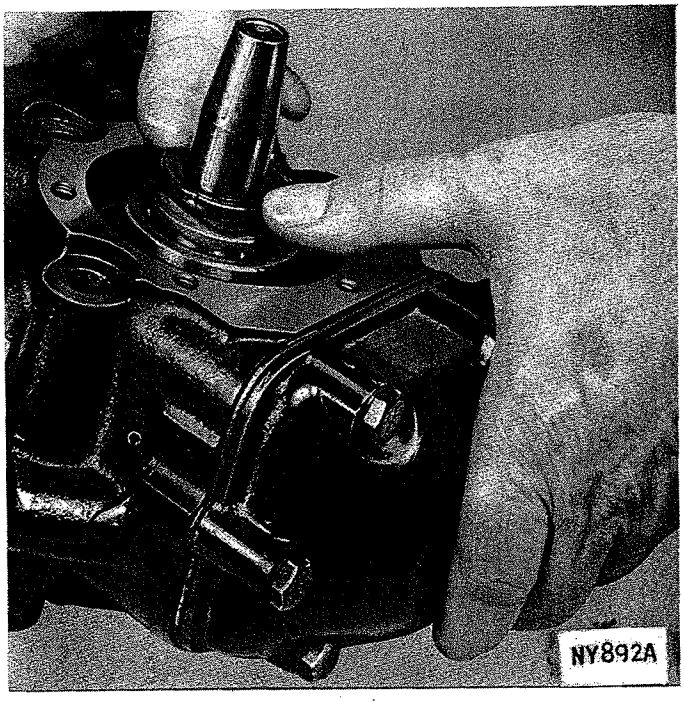


*Fig. 66—Inspect the Indexing of Tangs*

(3) Lubricate crankshaft with refrigerant oil. Slide the seal on the crankshaft with smooth (carbon seal) surface up, or toward the front of compressor.

(4) When seal bottoms against the crankshaft bearing, inspect indexing of tangs again by pressing down with thumbs to see if it has proper spring action. (Refer to Figure 66.)

(5) Lubricate and install crankshaft bearing housing seal seat plate with the smooth (micro-finish) side up. Use a sleeve with the minimum inside diameter of 1⅜ inches to avoid damaging the micro-finish sealing surface of the face plate. Tap sleeve lightly until the seal seat is fully seated in the housing.

**Cleanliness is important. Wipe seat clean with a lint-free cloth and re-oil with refrigerant oil.**

(6) Install the bearing housing oil seal, using plenty of refrigerant oil.

(7) Install the housing, making sure it is in proper alignment with the screw holes. The gas seal assembly may be damaged if the bearing housing is rotated after the housing seal contacts the carbon seal.

(8) Install bolts and tighten 10 to 13 foot-pounds.

## CRANKSHAFT AND BALL BEARINGS

### *Removal*

(1) Remove cylinder heads and valve plates.

(2) Remove pistons and connecting rods.

(3) Remove crankshaft bearing housing and gas seal.

**The pistons and rods must be completely removed before the crankshaft removal.**

(4) Remove crankshaft and thrust washer from crankcase.

(5) To remove the crankshaft ball bearing, use a small arbor press. Make sure bearing is properly supported before pressing bearing from shaft.

### *Inspection*

Clean and inspect all the parts. Replace questionable parts as required. If the crankshaft ball bearing is in good condition and clean, protect it against entry of dirt and re-use it. If bearing is serviceable but dirty, or there is evidence of dirt, clean it carefully with mineral spirits and shake dry. Saturate bearing with clean refrigerant oil and assemble immediately. If a new bearing is to be installed, leave it wrapped in its protective package until ready for installing.

**Do not wash a new bearing assembly before installation.**

### *Installation*

(1) Press crankshaft ball bearing on crankshaft using a sleeve which bears on inner race **only.**

(2) Install crankshaft, making sure the thrust washer is on the rear bearing journal before placing crankshaft in the crankcase.

(3) Rotate crankshaft to engage the oil pump shaft in the crankshaft slot.

(4) Install new gas seal and crankshaft bearing housing. Use a suitable tool, as shown in Figure 67 to assure free axial movement.

(5) Install pistons and connecting rods.

(6) After pistons and connecting rods are installed, turn the crankshaft to check freeness. Shaft should turn without binding.

(7) Install oil sump, valve plates and cylinder heads, using new gaskets.

## OIL PUMP

### *Removal*

To remove oil pump, it is not necessary to drain the refrigerant oil from the crankcase.

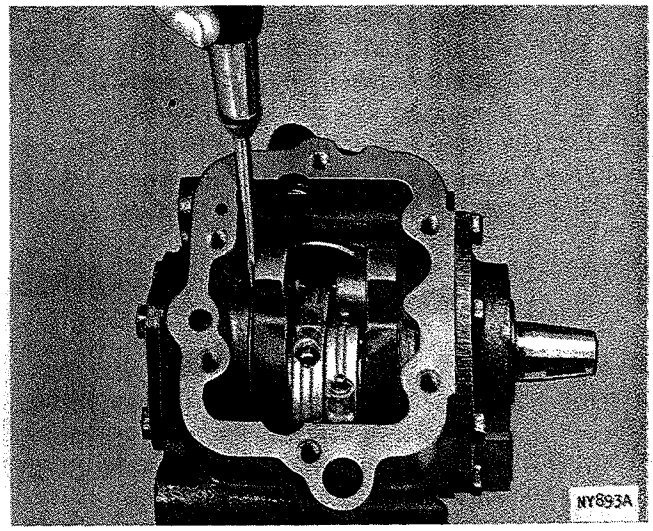


*Fig. 67—Measuring the Crankshaft Axial Movement*

MyMopar.com

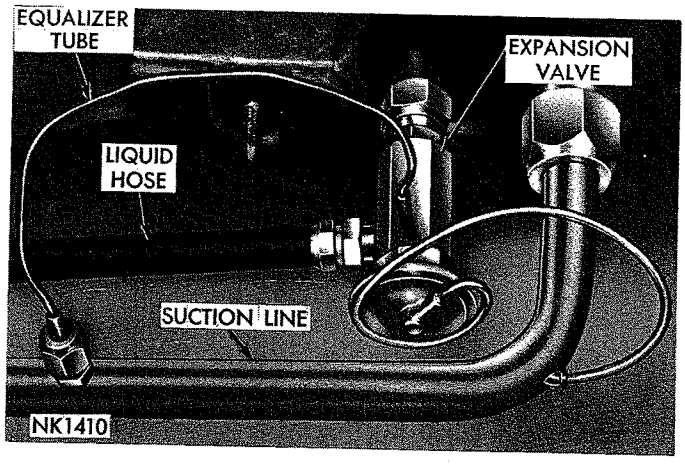


*Fig. 68—Expansion Valve Installed*

(1) Remove oil pump cover plate and oil seal.
(2) Remove drive shaft and rotors.

### Installation

(1) Install oil pump drive shaft by rotating the shaft until tang end engages in the crankshaft slot.
(2) Install inner rotor on the drive shaft, engaging the drive.
(3) Install outer rotor, and rotate it until it will slide forward over inner rotor cams. Turn compressor crankshaft with the oil pump in this position to determine that rotors do not bind.
(4) Install oil pump cover plate and oil seal.
(5) Tighten bolts 10 to 13 foot-pounds.

## EXPANSION VALVE

### Removal "Fury"

The system must be completely discharged before opening any of the refrigerant lines.
(1) Disconnect equalizer from suction line fitting (Fig. 68).
(2) Disconnect expansion valve from liquid line and evaporator. Use two wrenches to loosen each of these connections.
(3) Carefully pull out capillary sensing tube from suction line well.
(4) Remove rubber seal from the capillary sensing tube. Inspect condition of inlet screen.

### Installation

(1) With new "O" rings and clean refrigerant oil on all fittings, connect expansion valve to liquid line and evaporator assembly using two wrenches to prevent rotation and twisting of the lines.
(2) Connect equalizer tube to the fitting on suction line.
(3) With a rubber seal on the capillary sensing tube, carefully insert the tube in the suction line well as far as it will go (approximately five inches).
(4) After expansion valve is installed, it must be completely tested and the system must be tested for leaks and recharged.

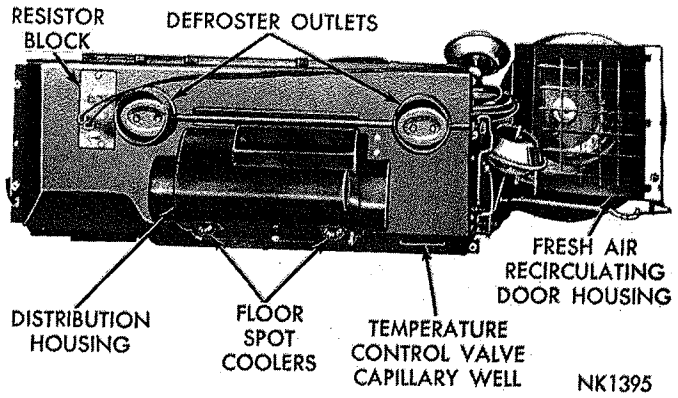


*Fig. 69—Heater and Evaporator Assembly—Front View*

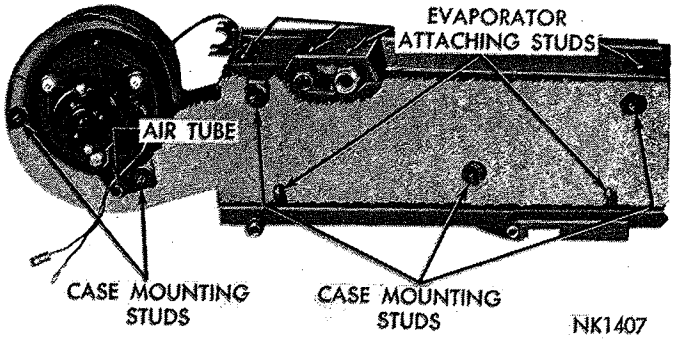


*Fig. 70—Heater and Evaporator Assembly—Rear View*

## HEATER CORE

### Removal "Fury"

**The heater core is located behind a separate cover attached to the evaporator case forward of the instrument panel (Figs. 69 and 70).**

(1) Disconnect cable at battery, drain cooling system, remove air cleaner, and disconnect heater hoses.
(2) Remove distribution housing (Fig. 69) glove box and heater core inlet-outlet tube assembly (Fig. 71).

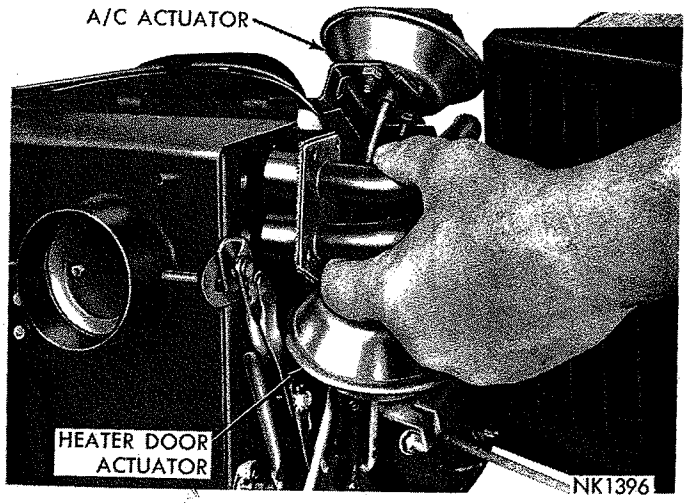


*Fig. 71—Heater Core Water Tube Assembly—Removal or Installation*

MyMopar.com

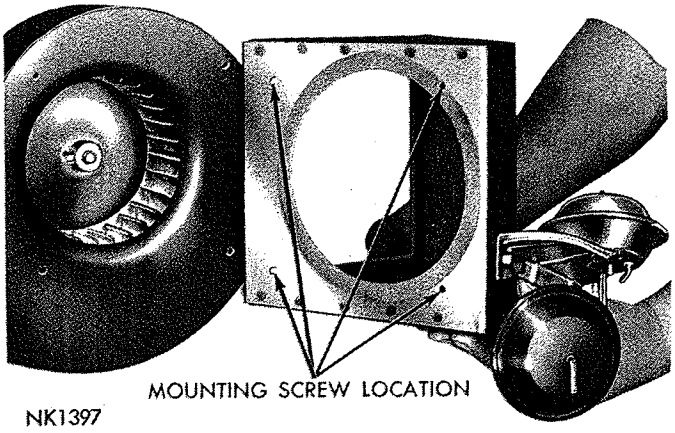


***Fig. 72—Fresh Air-Recirculating Door Housing Removal or Installation***

(3) Remove fresh air-recirculating air inlet hose.
(4) Disconnect floor air actuator rod from linkage.
(5) Disconnect actuator vacuum hoses and remove fresh air-recirculating door housing assembly (Fig. 72).
(6) Remove defroster hoses, disconnect electrical connections from resistor block and by-pass switch.
(7) Remove the two screws attaching the water by-pass valve to heater cover and remove the operating link attaching screw (Fig. 73).
(8) Disconnect air conditioning door actuator from mounting bracket and remove the two support braces.
(9) Remove five retainer spring clips and ten screws attaching cover to the case.
(10) To remove the cover and heater core it will be necessary to pull lower edge rearward, then lift assembly ⅜ inch to unhook the cover lip from the case. Carefully lower the assembly and out to the right side.

### *Installation*

**Install the water by-pass valve with linkage to the heater core (if removed). Use new "O" rings on the inlet and outlet tubes (Fig. 74).**

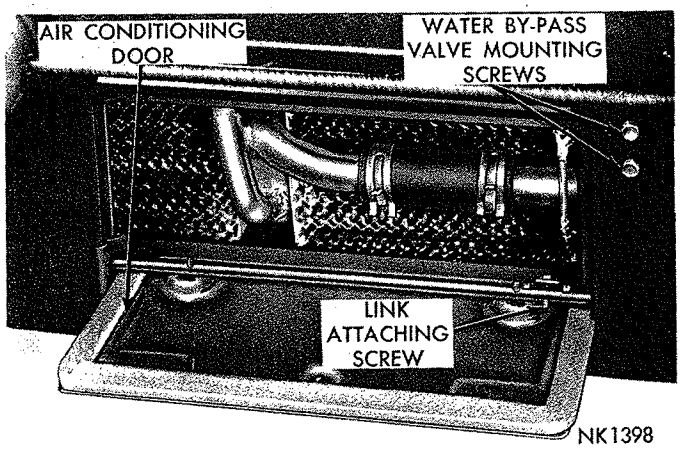


***Fig. 73—Water By-Pass Valve Link Attaching Screw***

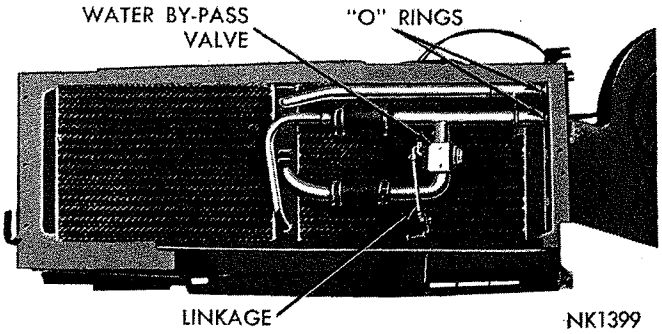


***Fig. 74—Heater Core and By-Pass Valve Assembly***

(1) Position heater core on evaporator case.
(2) To install the cover it is necessary to hook the cover lip on the evaporator case and roll it down into position. Secure the cover with five retainer spring clips on top and ten screws on the two sides and bottom.
(3) Attach water by-pass valve to heater cover and the operating link to air conditioning door.
(4) Install air conditioning door actuator with the vacuum hoses (hose with red stripe to the rod side), and the two support braces.
(5) Install electrical connections to resistor block.
(6) Adjust electrical by-pass switch operating arm to have .020 to .060 inch operating clearance between operating arm and actuator rod (Fig. 75).
(7) Install the vacuum hoses to floor air actuator and the fresh air-recirculating actuator (hose with red stripe to the rod side) and install the fresh air-recirculating door housing. Connect floor air actuator rod to the linkage with the retainer clip.
(8) Install fresh air-recirculating air inlet hose.
(9) Install the heater core inlet-outlet tube assembly, a drop or two of clean water on the "O" rings will facilitate installation.
(10) Install temperature control valve capillary tube in heater core cover.
(11) With the air conditioning door open approxi-

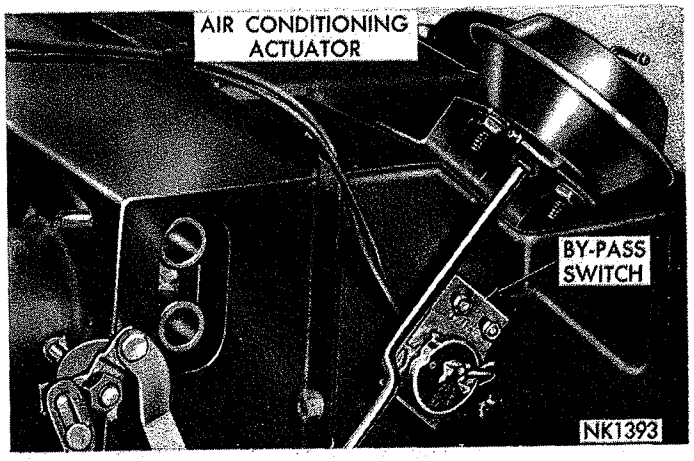


***Fig. 75—By-Pass Switch Adjustment***

MyMopar.com

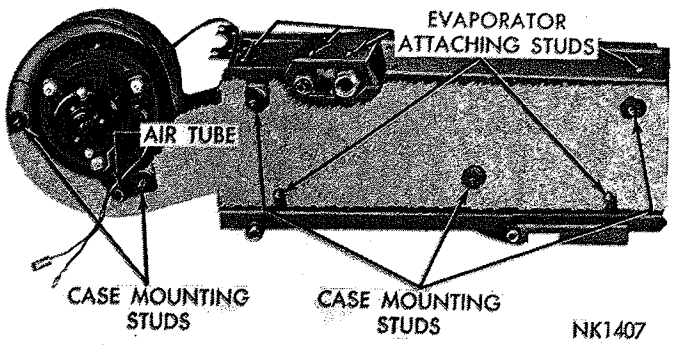


*Fig. 76—Heater and Evaporator Assembly—Rear View*

mately one inch, install the distribution housing.

(12) Install the flexible hoses to the instrument panel outlets.

(13) Install glove box assembly.

(14) Connect the heater hoses and fill cooling system. For summer operation as well as winter operation, be sure the system is protected with the proper type and amount of antifreeze.

(15) Install air cleaner and connect battery cable.

(16) Start engine, operate until normal engine operating temperature is obtained and test operation of the heater assembly.

## EVAPORATOR

### *Removal "Fury"*

**The system must be completely discharged before opening any of the refrigerant lines.**

To remove the evaporator and case assembly it is necessary to remove the heater core and cover assembly first.

(1) Disconnect suction line and expansion valve from evaporator. Use two wrenches to loosen each of these connections.

**Cap all refrigerant openings to prevent the entrance of dirt and moisture.**

(2) Disconnect blower motor wires and air tube.

(3) Remove the five mounting stud nuts and remove the evaporator assembly with the blower motor as a single unit (Fig. 76).

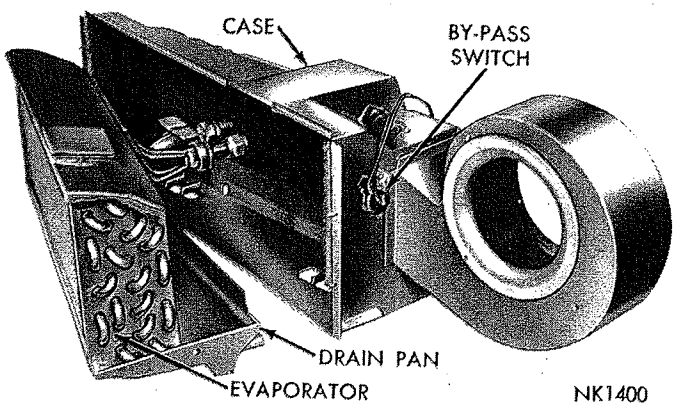


*Fig. 77—Evaporator Removed From Case*

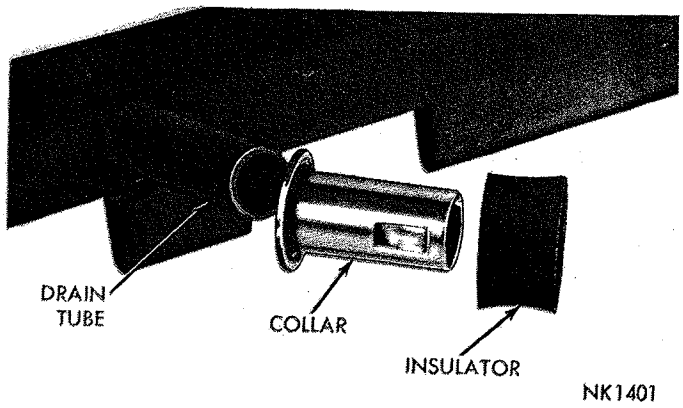


*Fig. 78—Evaporator Drain Tube Collar and Insulator*

(4) Remove six evaporator attaching screws and carefully remove evaporator from case (Fig. 77).

### *Installation*

(1) Install the evaporator and drain pan being careful not to damage the case insulation, secure the six attaching screws.

(2) Install collars and insulators on the two drain tubes (Fig. 78).

(3) Position evaporator with blower motor on dash panel and install the stud nuts that attach the assembly to the dash panel.

(4) Install blower motor wires and air tube.

(5) Use new "O" rings with clean refrigerant oil on all connections. Install suction line and expansion valve to the evaporator fittings. Use two wrenches to prevent rotation and twisting of the lines.

(6) Install heater as described in Paragraph "Heater Core" Page 43.

**After the evaporator and heater assemblies are installed in the vehicle, it will be necessary to sweep the system, test for leaks and charge the system with the proper amount of refrigerant. It is recommended that the operation of all controls be tested and an overall performance test be made after the repair or replacement of the evaporator assembly.**

## BLOWER MOTOR

### *"Fury"*

All service to the blower motor is made from the engine compartment side.

### *Removal*

(1) Disconnect feed wire at the connector and the ground wire. Remove air tube.

(2) Remove the three sheet metal screws located on the outer surface of mounting plate (Fig. 79).

(3) Remove mounting plate, blower motor and fan as an assembly.

### *Installation*

**If the blower was removed from the mounting plate, be sure the mounting grommets are installed at the attaching bolts. Be sure the blower wheel is free and does not rub.**

MyMopar.com

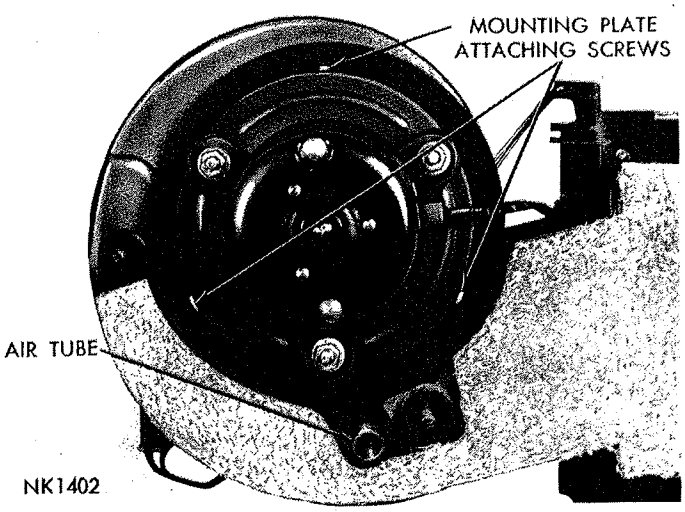


*Fig. 79—Blower Motor Installed*

(1) Install blower motor assembly to the evaporator case with the air tube opening to the bottom. Secure with the three sheet metal screws.

(2) Install air tube, motor ground wire and connect the feed wire.

(3) Test operation of blower.

## EXPANSION VALVE "Valiant and Barracula"

### Removal

The system must be completely discharged before opening any of the refrigerant lines.

(1) Remove equalizer tube from evaporator suction line fitting (Fig. 80).

(2) Disconnect expansion valve from elbow assembly and liquid line. Use two wrenches to loosen each of these connections.

(3) Carefully pull out capillary sensing tube from well located in suction line. Remove rubber seal from capillary sensing tube. Inspect inlet screen.

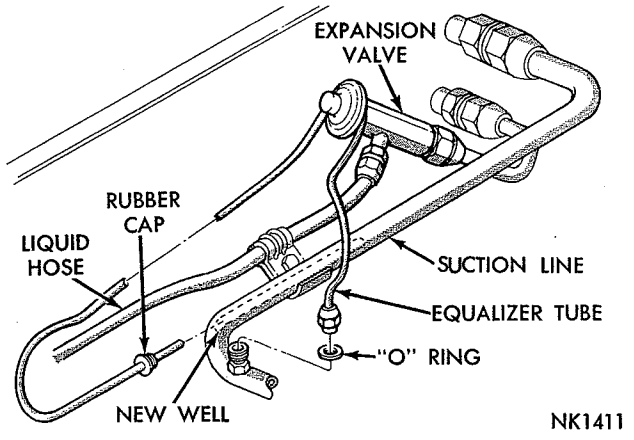


*Fig. 80—Expansion Valve*

### Installation

(1) With new "O" rings and clean refrigerant oil on

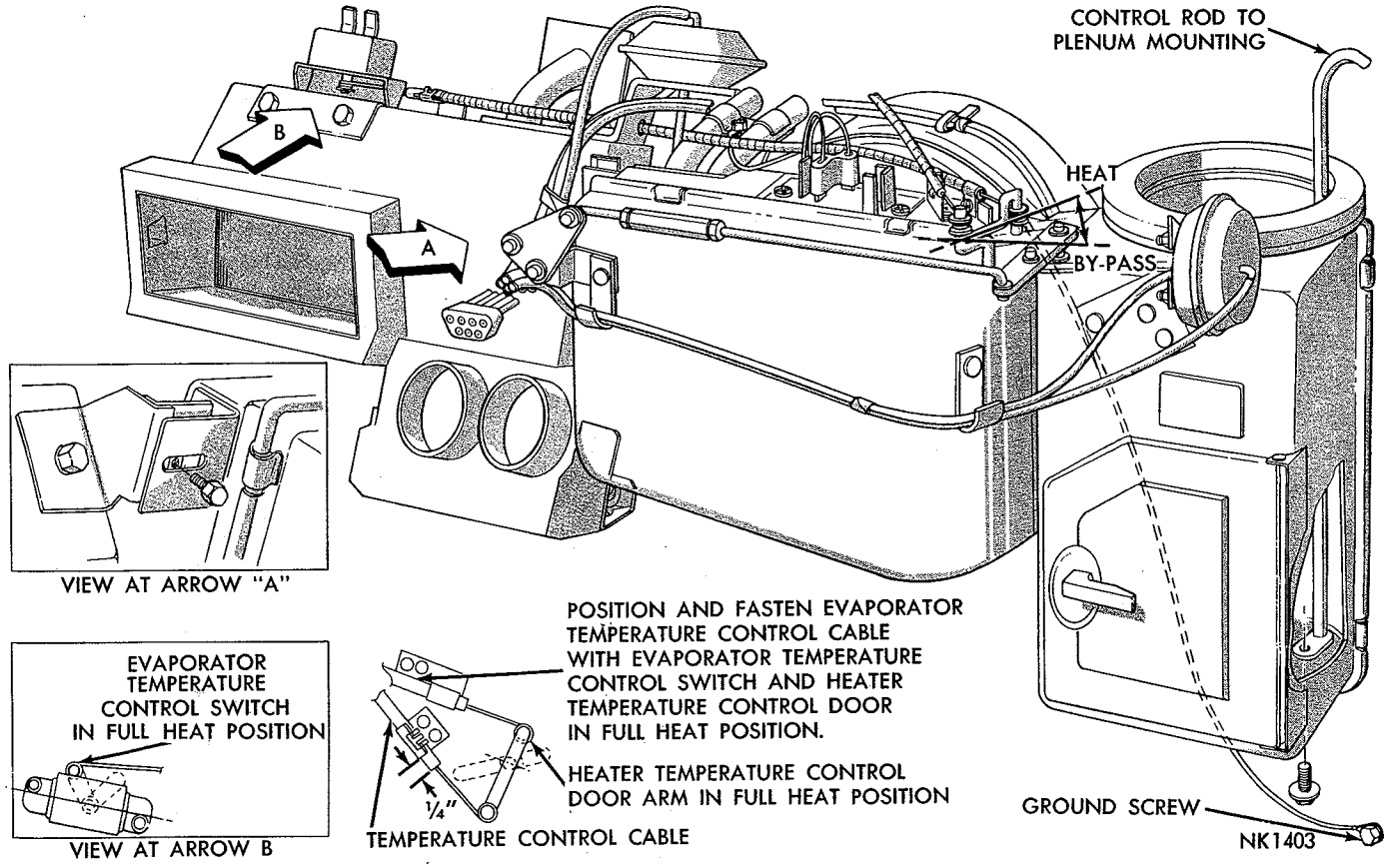


*Fig. 81—Heater and Evaporator Assembly—Front View*

MyMopar.com

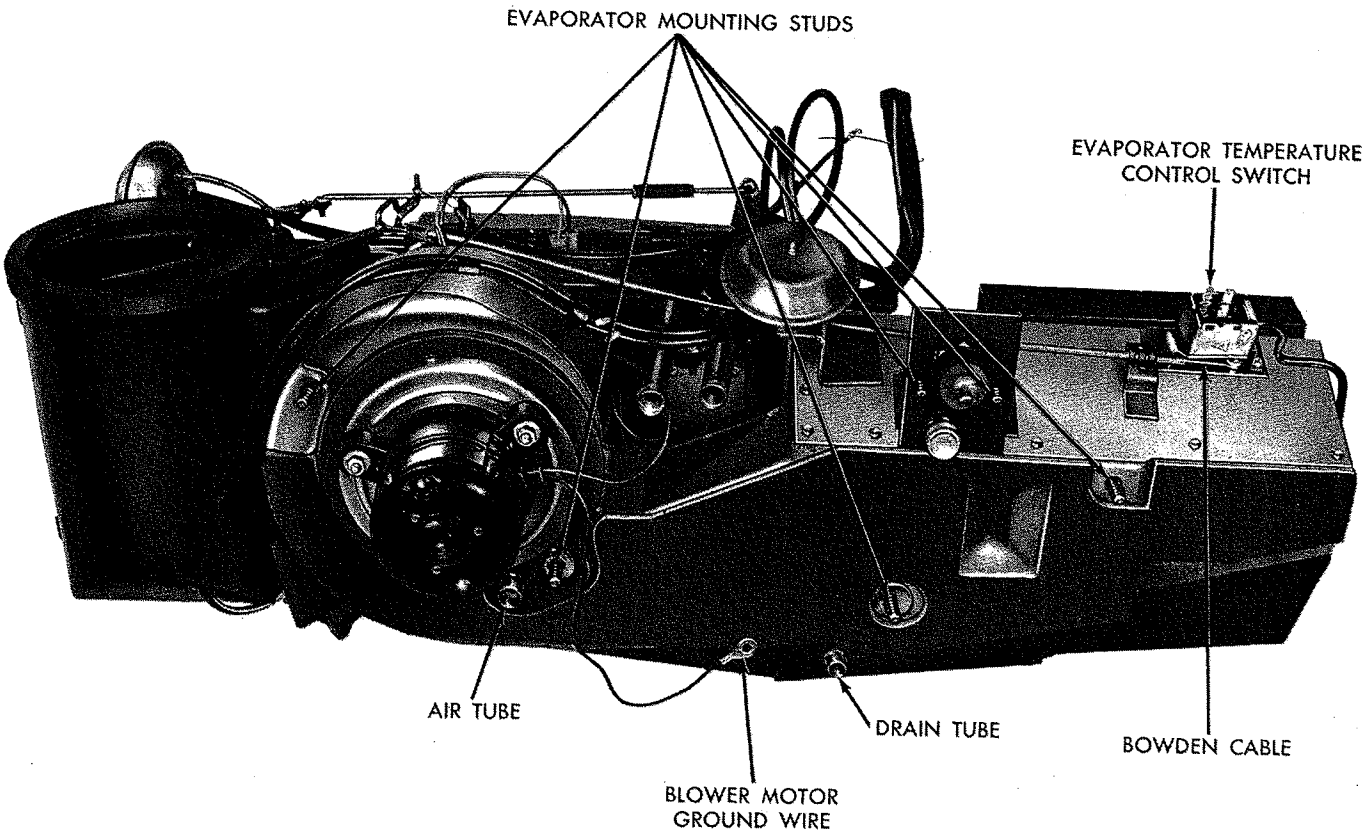


*Fig. 82—Heater and Evaporator Assembly—Rear View*

all fittings, install the expansion valve to the liquid line and elbow assembly using two wrenches to prevent rotation and twisting of the lines.

(2) Connect equalizer tube to the fitting on the evaporator suction line.

(3) With a rubber seal on the capillary sensing tube, carefully install the tube in the well located in the suction line as far as it will go (approximately five inch depth).

(4) After expansion valve is installed, it must be completely tested. Then the system must be tested for leaks and recharged.

## HEATER CORE

### *"Valiant and Barracuda"*

The heater core is located behind a separate cover forward of the instrument panel. The core is held in position in its cover by four sheet metal attaching screws. The core and cover are removed and installed as an assembly.

### *Removal (Figs. 81 and 82)*

(1) Disconnect battery and remove air cleaner.

(2) Drain cooling system and remove heater hoses from the core.

(3) Remove air outlet assembly, glove box assembly and right defroster tubing.

(4) Disconnect electrical wires from resistor block, vacuum hoses from the fresh air-recirculating actuator, the temperature control cable, evaporator temperature control switch control cable and heater core ground wire.

(5) Remove the screw securing the heater assembly to the evaporator assembly (View A, Fig. 81).

(6) Disconnect heater housing support rod from the fresh air duct (Fig. 82).

(7) Remove heater assembly.

(8) Remove fresh air-recirculating door actuator.

(9) Remove operating link between bellcrank and recirculating door.

(10) Remove the fresh air inlet seal from either front or rear heater housing half only.

(11) Remove the retainer clips attaching the heater housing halves together and separate the heater housing halves.

(12) Remove the screws attaching the heater core to heater housing and remove the core.

### *Installation*

(1) Place a small bead of sealer in heater housing flange.

(2) Install heater core in the heater housing and secure the four attaching screws.

(3) Cement the weatherseal on the inner lip of heater core flange (Fig. 83).

MyMopar.com

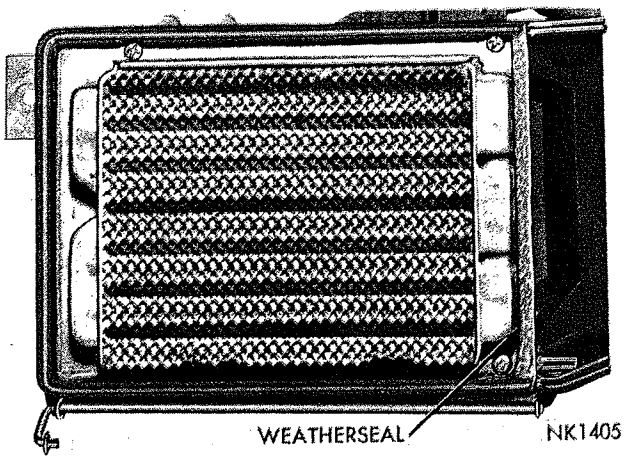


*Fig. 83—Weatherseal Positioned*

(4) Place a small bead of sealer on heater housing cover.

(5) Position both housing halves together and install the eleven retainer spring clips. Remove any excess sealer.

(6) Cement fresh air inlet seal into position.

(7) Install operating link between bellcrank and recirculating door. Adjust if necessary. With recirculating door closed, fresh air door should be fully open.

(8) Install fresh air recirculating actuator.

(9) Position heater assembly in the vehicle and proceed as follows:

(a) Install temperature control cable on outer operating arm in full heat position with end of cable housing ¼ inch beyond edge of retainer clip (Fig. 81).

(b) Install the evaporator temperature control switch cable on the inner operating arm in full heat position with the end of the cable housing ¼ inch beyond the edge of the cable clip.

(10) Position heater assembly on dash panel and secure heater support rod to the fresh air duct and the screw to the evaporator assembly.

(11) Install electrical wires to resistor block, vacuum hoses to fresh air-recirculating actuator (red stripe to rod side) and heater core ground wire.

(12) Install right defroster tubing, glove box assembly and air outlet assembly.

(13) Install heater hoses, fill cooling system, connect battery terminal and install air cleaner.

(14) Start engine, operate until normal engine operating temperature is obtained and test operation of heater asesmbly.

## EVAPORATOR "Valiant and Barracuda"

The evaporator assembly includes the evaporator core, the evaporator housing with the evaporator inlet and defroster doors. To remove the evaporator assembly, it is necessary to remove the heater assembly, See "Heater Removal." The system must be completely discharged before opening any of the refrigerant lines.

### *Removal*

(1) Disconnect elbow assembly and suction lines from evaporator. Use two wrenches to loosen each of these connections. Cap all the refrigerant openings to prevent entrance of dirt and moisture.

(2) Disconnect blower motor wires and air tube.

(3) Disconnect by-pass switch wires and actuator hoses.

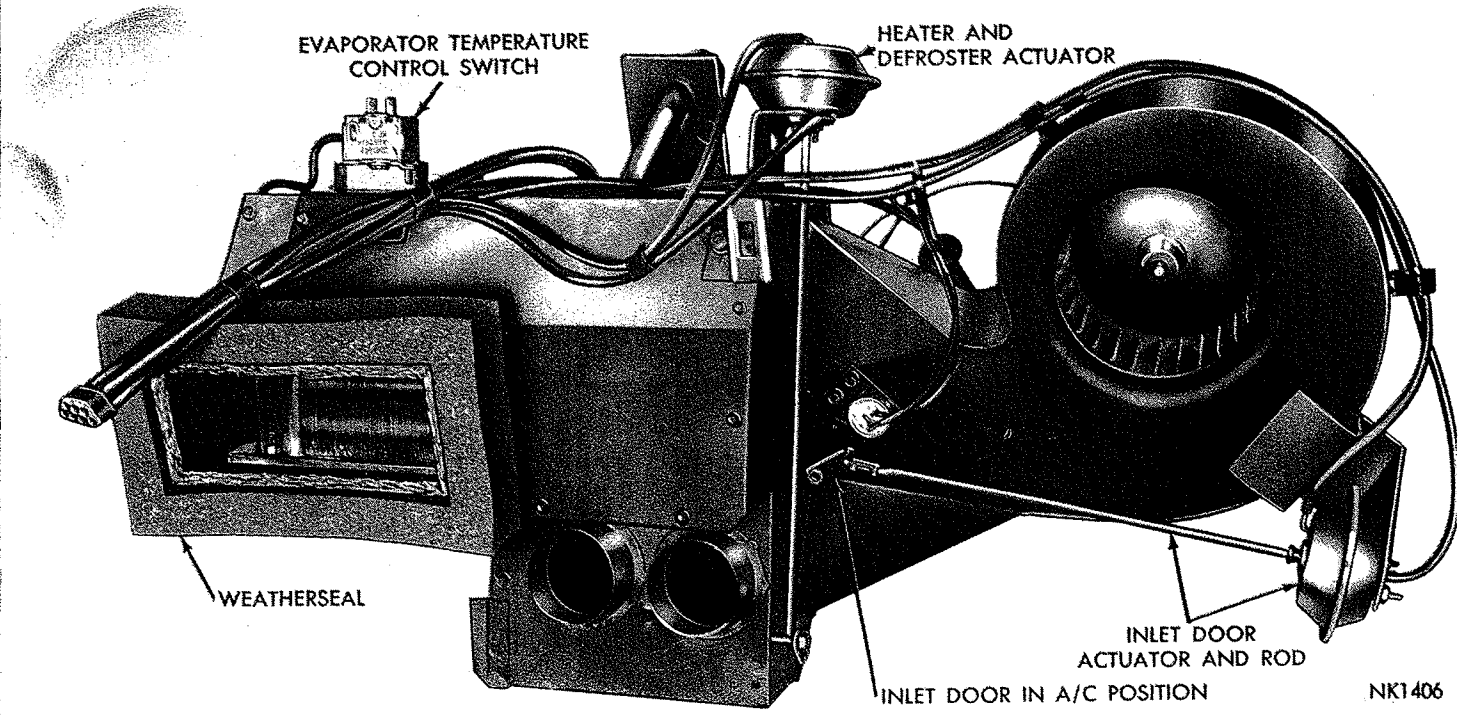


*Fig. 84—Evaporator Assembly Removed*

MyMopar.com

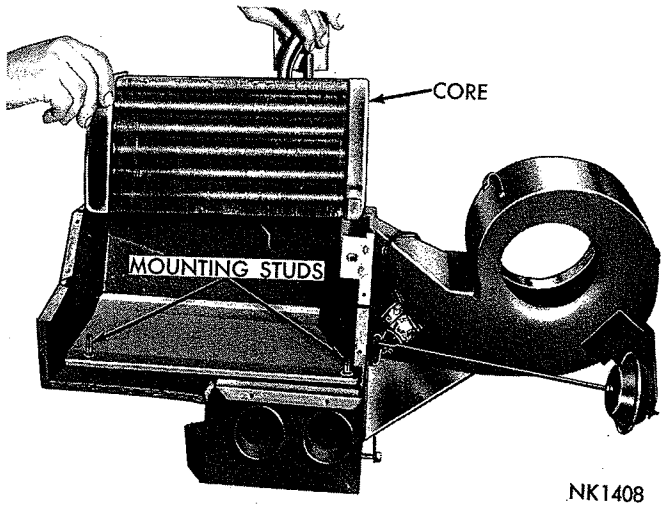


*Fig. 85—Removing the Evaporator Core*

(4) Remove mounting stud nuts and remove evaporator assembly with blower motor as a single unit (Fig. 84).

(5) Remove defroster actuator, evaporator temperature control switch, and carefully withdraw the capillary sensing tube.

(6) Remove the weatherseal around the air outlet opening, and remove the attaching cover screws and cover.

(7) Remove the attaching stud nuts and remove evaporator from case (Fig. 85).

### *Installation*

(1) Position evaporator in the case and secure with attaching stud nuts.

(2) Place a small bead of sealer on case flange, install case cover and secure the attaching screws. Remove any excess sealer.

(3) Carefully install capillary sensing tube through the case into the evaporator **to the full depth** (Fig. 86). Position evaporator temperature control switch and secure with attaching screws (Fig. 84).

(4) Install defroster actuator and cement the weatherseal around air outlet opening.

(5) Position evaporator assembly on the dash panel and install the stud nuts that attach the assembly to dash panel.

(6) Install blower motor wires and air tube.

(7) Use new "O" rings with clean refrigerant oil on all connections, install the inlet elbow assembly and suction line. Use two wrenches to prevent rotation and twisting of the lines.

(8) Install by-pass switch wires, and actuator hoses (hose with red stripe to rod side).

(9) Install heater as described in Paragraph "Heater Installation."

(10) After the evaporator and heater assemblies are installed in the vehicle, it will be necessary to sweep the system, test for leaks and charge the system with the proper amount of refrigerant. It is recommended that the operation of all controls be tested and an overall performance test be made after the repair or replacement of the evaporator assembly.

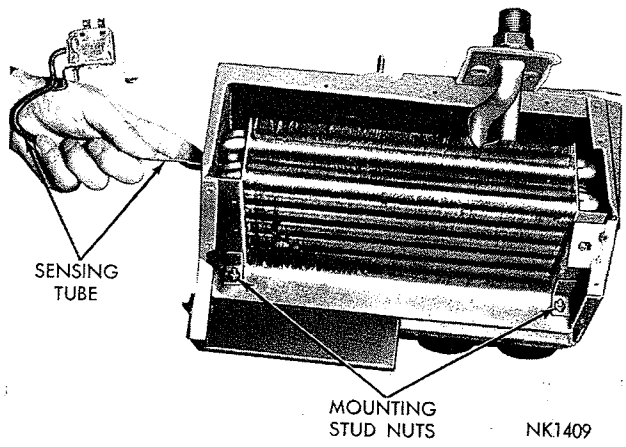


*Fig. 86—Installing Capillary Sensing Tube*

## BLOWER MOTOR

### *"Valiant and Barracuda"*

All service to the blower motor is made from the engine compartment side.

### *Removal*

(1) Disconnect feed wire at connector and ground wire. Remove air tube.

(2) Remove the three sheet metal screws located on the outer surface of mounting plate.

(3) Remove mounting plate, blower motor and fan as an assembly.

### *Installation*

**If the blower was removed from the mounting plate, be sure the mounting grommets are installed at the attaching bolts. Be sure the blower wheel is free and does not rub.**

(1) Install blower motor assembly to the evaporator case with air tube opening to the bottom. Secure with the three sheet metal screws.

(2) Install air tube, motor ground wire and connect the feed wire.

(3) Test operation of blower motor.

## 1966 REFRIGERANT CHARGE

| | Single | Dual |
|---|---|---|
| Fury | 2 lbs. 14 oz. to 3 lbs. 2 oz. | 3 lbs. 14 oz. to 4 lbs. 2 oz. |
| Valiant and Barracuda | 2 lbs. 10 oz. to 2 lbs. 14 oz. | |

**An accurate scale must be used to insure charging with the proper amount of refrigerant.**

Since the use of canned refrigerant is preferred universally, only that method is described.

MyMopar.com

## COMPLETE SYSTEM DISCHARGE AND RECHARGE

### REFRIGERANT SERVICE

Use only Refrigerant 12 in the 1966 air-conditioning system. Refrigerant 12 is available in bulk tanks or in sealed 15 ounce cans. The use of canned refrigerant is preferred by most technicians because it provides a very quick and simple means of adding refrigerant or charging the system completely. Refer to the 1966 Refrigerant Charge Chart.

Before the system can be opened for replacement of lines or components, the system must be completely discharged. It is also necessary to discharge the system before performing the Compressor Capacity Test and the Expansion Valve Test. Whenever the system has been opened, it must be swept with a partial charge, and the entire system tested for leaks. The drier should be replaced and the system evacuated using a vacuum pump to remove all air and moisture. The system should be charged with the proper amount of refrigerant. Detailed instruction for performing these operations follow.

### DISCHARGE THE SYSTEM

(1) Be sure the valves of the gauge manifold set are closed before attaching the gauge set manifold (suction test hose to the suction service port and discharge test hose to the discharge service port). Attach the long test hose to the center connection of the gauge set manifold. Lead the other end of this hose into an exhaust ventilation system outlet or to the outside of the building.

(2) Open the gauge set manifold needle valve and close both of the gauge set manifold gauge valves.

(3) With the vehicle windows open and hood up, operate the engine as shown in the following chart:

| | Engine | Engine R.P.M. |
|---|---|---|
| Fury | 6 Cyl. | 1600 |
| | 8 Cyl. | 1300 |
| Valiant and Barracuda | 6 Cyl. | 1250 |
| | 8 Cyl. | 1000 |

(4) **"Fury" installation**—push in "Fresh" button, fan switch on high. On dual installation both blowers must be on high speed during the charging operation.

**"Valiant and Barracuda" installation**—push in the "A/C" button and fan switch on high.

(5) Allow the system to operate at full capacity for at least 15 minutes at the rpm shown in the chart step 3. This will cause most of the compressor oil in the system to return to the compressor crankcase.

(6) Open the discharge right-hand gauge valve a small amount. This will allow the refrigerant vapor to discharge **slowly.**

**CAUTION: Do not allow the system to discharge rapidly since this would sweep some of the refrigerant oil out of the compressor.**

(7) Allow the system to discharge until the discharge pressure gauge registers zero. Open the left-hand valve to release any vapor trapped at the suction side of the system.

### SWEEP-TEST CHARGE

The purpose of the sweep-test charge is to pressurize the system so that a leak test can be made. The sweep-test charge also serves the purpose of drying the system or sweeping out trapped moisture. Repairs and component replacement must be completed before charging with the sweep-test charge.

(1) Close both gauge set manifold valves and open the gauge set manifold needle valve.

(2) Attach the free end of the long hose used for discharging to the refrigerant dispensing manifold.

(3) Attach a single can of Refrigerant 12 to the dispensing manifold. Place the refrigerant in 125 degree water. For detailed instructions on attaching refrigerant can for charging, see "Charging the System" in this section.

(4) With vehicle windows open and hood up, operate engine as shown in the following chart:

| | Engine | Engine R.P.M. |
|---|---|---|
| Fury | 6 Cyl. | 1600 |
| | 8 Cyl. | 1300 |
| Valiant and Barracuda | 6 Cyl. | 1250 |
| | 8 Cyl. | 1000 |

(5) **"Fury" installation**—push in "Fresh" button, fan switch on high. On dual installation both blowers must be on high speed during the charging operation.

**"Valiant and Barracuda" installation**—push in the "A/C" button and fan switch on high.

(6) Slowly open the left-hand gauge set manifold valve to meter the refrigerant into the system. When the full can of refrigerant has been metered into the system, close the gauge set manifold valves and the refrigerant manifold valve.

If the system has been opened for repair or replacement, a complete leak test must be made to make sure the system is sealed. Also, if the system has accidentally lost its charge it will be necessary to perform a leak test while the sweep-test charge is in the system. Stop the engine and disconnect the test hoses and adapters from the compressor service ports.

### TESTING THE SYSTEM FOR LEAKS

The leak detector torch Tool C-3569 is a propane gas-burning torch used to locate a leak in any part of the refrigeration system. Refrigerant gas drawn into the sampling or "snifter" tube will cause the flame to

MyMopar.com

change color in proportion to the size of the leak. A very small leak will produce a flame color varying from yellowish-green to bright green. A large leak will produce a brilliant blue flame.

**CAUTION: Do not use the lighted detector in any place where explosive gases, dust, or vapor are present. Do not breathe the fumes that are produced by the burning of refrigerant gas. Large concentrations of refrigerant in the presence of a live flame become dangerously toxic. Observe the flame through the window of the burner shield, not through the top of the shield.**

(1) Open the torch valve until you hear a faint hiss of escaping gas. Light the test torch and adjust the valve until the flame is very small. A small flame will detect large as well as small leaks, whereas, a large flame will detect only large leaks. As soon as the reaction plate seen through the window in the burner shield becomes red hot, the tester is ready for use.

(2) Examine all the tube connectors and other possible leak points by moving the end of the sampling hose from point to point. Since Refrigerant 12 is heavier than air, it is good practice to place the open end of the sampling hose directly below the point being tested. Be careful not to pinch the sampling tube since this will shut off the air supply to the flame and cause a color change.

(3) Watch for a change in the color of the flame Small leaks will produce a green color and large leaks a bright blue color. If leaks are observed at the tube fittings, tighten the connection, using the proper flare wrenches, and retest.

If the flame remains bright yellow when the tester is removed from a possible leak point, insufficient air is being drawn in through the sampling tube, or the reaction plate is dirty.

## REMOVE SWEEP-TEST CHARGE

If the system is free of leaks, or after correcting a leak, if no air-conditioning components have been removed, add the necessary refrigerant as described under "Correcting the Low Refrigerant Level." If any parts of the refrigerant system were disconnected remove the sweep-test charge. Close the refrigerant manifold valve so that any refrigerant remaining in the container is sealed. Remove the long test hose from the refrigerant manifold. Insert the free end of this test hose into an exhaust system outlet. Open the right-hand gauge set manifold valve a fraction of a turn to let the sweep-test charge escape slowly. Allow the system to discharge until the discharge pressure gauge registers zero. Open the left-hand gauge valve to allow any refrigerant trapped in the suction side of the system to escape.

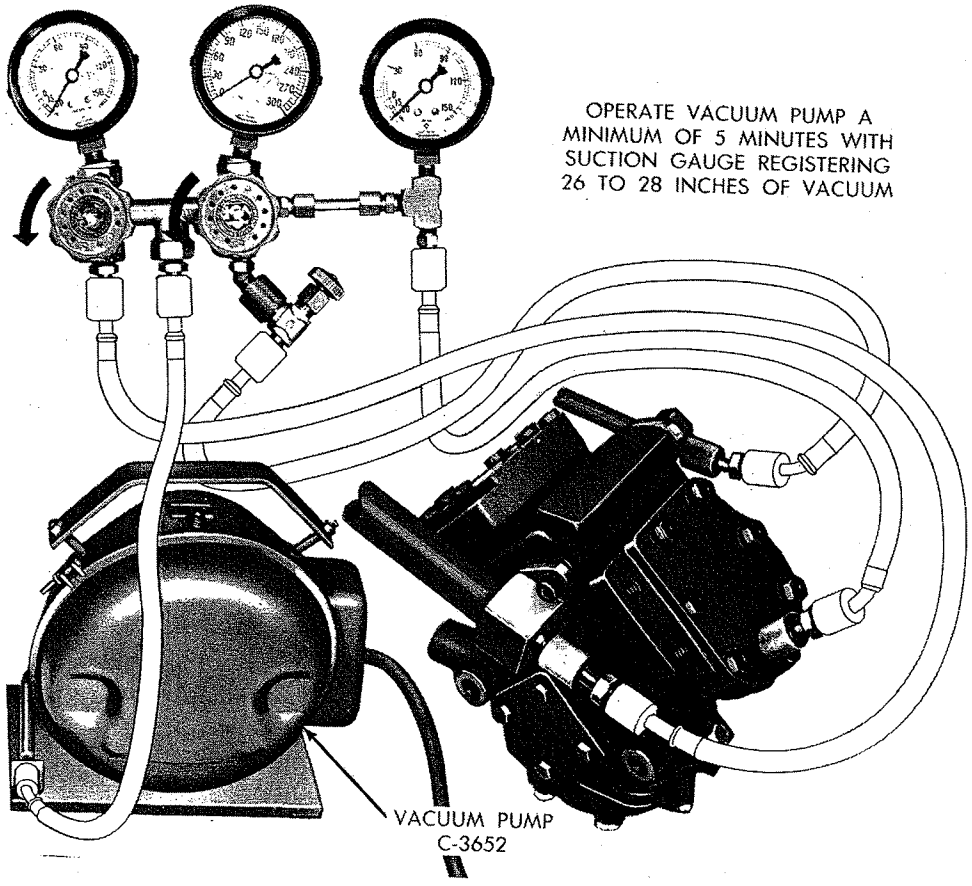


*Fig. 87—Evacuating the System (Fury Installations)*

MyMopar.com

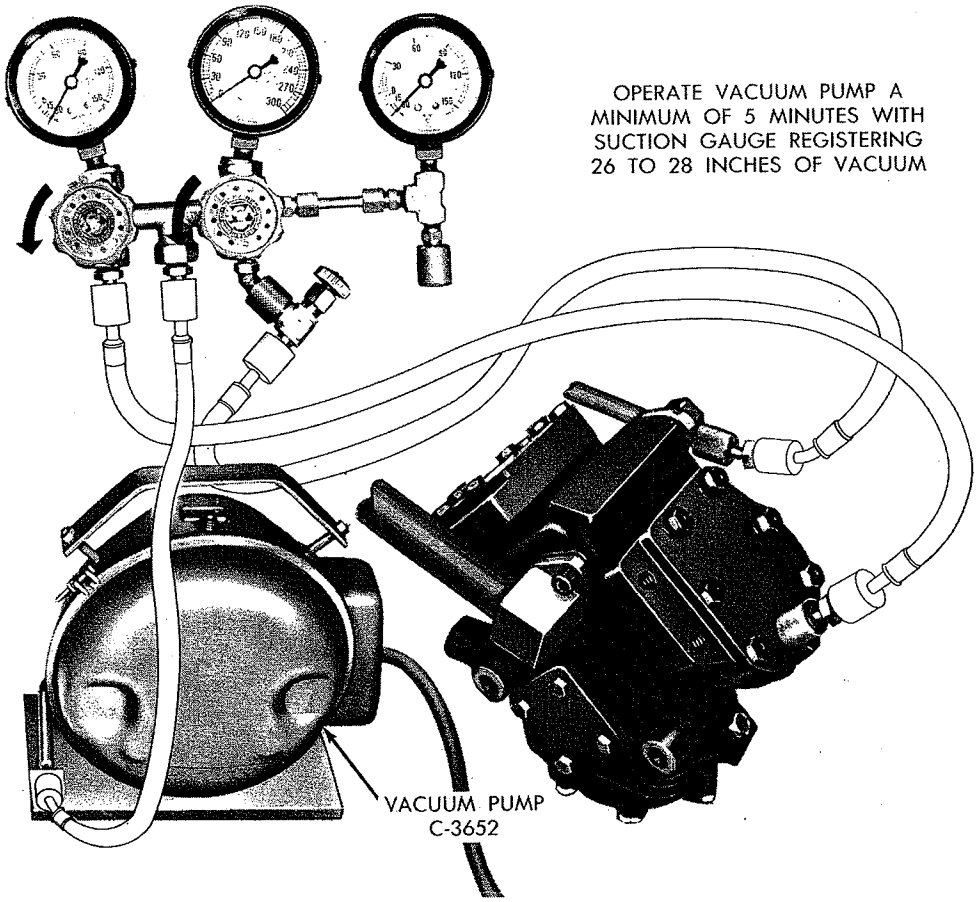


*Fig. 88—Evacuating the System (Valiant and Barracuda Installations)*

## REPLACE THE RECEIVER-DRIER-STRAINER

The system must be discharged and swept with a test charge before replacing the receiver-drier-strainer. To remove the receiver-drier-strainer, simply unscrew it from the combination dry-eye sight glass. When installing a new receiver-drier-strainer, use a new gasket. Tighten the new unit to 12 foot-pounds torque. Do not overtighten since this might damage the gasket.

**CAUTION: Replacement receiver-drier-strainer units must be sealed while in storage. The drier used in these units is so hungry for moisture that it can saturate quickly upon exposure to the atmosphere. When installing a drier, have all tools and supplies ready for quick reassembly to avoid keeping the system open any longer than necessary.**

## EVACUATE THE SYSTEM

Whenever the system has been opened to atmosphere, it is absolutely essential that the system be swept with refrigerant and evacuated or "vacuumed" to remove all the air and the moisture. If any appreciable amount of air remains in the system when it is charged, the trapped air will concentrate near the top of the condenser and cause abnormally high discharge pressure. Air in the system will reduce the condenser's ability to condense the refrigerant gas and supply adequate liquid refrigerant to the evaporator. To evacuate the system, proceed as follows:

(1) Connect gauge set manifold to compressor and long test hose from gauge set manifold center connection to vacuum pump, Tool C-3652, as shown in Figure 87 and 88.

(2) Open both gauge set manifold valves, and the needle valve.

(3) Start the vacuum pump and operate until the evaporator suction gauge registers at least 26 inches of vacuum. If system is tight and pump in good condition, vacuum will go as low as 28 inches.

(4) Allow vacuum pump to operate with the suction gauge registering 26 to 28 inches of vacuum for a minimum of five minutes.

(5) Close both gauge set manifold valves, turn off vacuum pump and remove test hose from vacuum pump. Leave gauge set manifold connected to compressor. Charge system with proper amount of Refrigerant 12.

**Failure to pull at least 26 inches of vacuum indicates a leak in the refrigeration system or a defective**

MyMopar.com

24-55

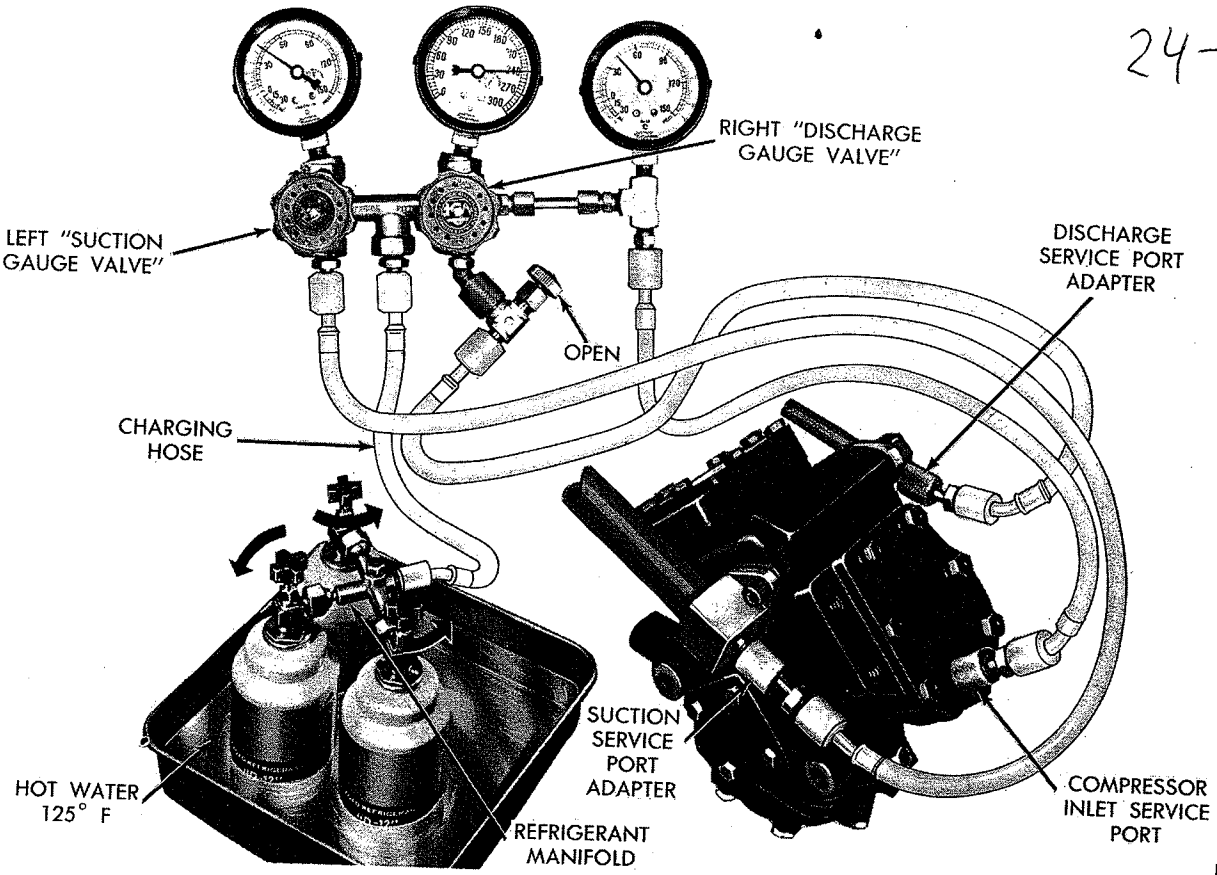


***Fig. 89—Complete System Charging (Fury Installations)***

**vacuum pump. Locate and correct the trouble before recharging the system.**

## CHARGING THE SYSTEM (Figs. 89 and 90)

### 1966 REFRIGERANT CHARGE

| | Single | Dual |
|---|---|---|
| Fury | 2 lbs. 14 oz. to 3 lbs. 2 oz. | 3 lbs. 14 oz. to 4 lbs. 2 oz. |
| Valiant and Barracuda | 2 lbs. 10 oz. to 2 lbs. 14 oz. | |

**An accurate scale must be used to insure charging with the proper amount of refrigerant.**

The special refrigerant dispensing manifold permits charging three full cans of refrigerant at one time.

**Keep the refrigerant manifold valves capped when not in use. Keep a supply of extra refrigerant-can-to-refrigerant-manifold gaskets on hand so that gaskets can be replaced periodically. This will insure a good seal without excessive tightening of the can or the manifold nuts.**

(1) Attach center hose from gauge set manifold to refrigerant dispensing manifold. Turn refrigerant manifold valves completely counterclockwise so they are fully open. Remove protective caps from refrigerant manifold.

(2) Screw refrigerant cans into manifold. Be sure manifold-to-can gasket is in place and in good condition. Tighten can and manifold nuts to 6 to 8 foot-pounds.

(3) Turn three refrigerant manifold valves completely clockwise to puncture the cans and close the manifold valves.

(4) Turn refrigerant manifold valves counterclockwise to open them.

(5) Momentarily loosen the charging hose at the gauge set manifold to allow the refrigerant gas to purge air out of the charging hose.

(6) Place the three cans of refrigerant into a pan containing hot water at a temperature of 125 degrees F.

(7) Start engine and adjust speed as follows:

| | Engine | Engine R.P.M. |
|---|---|---|
| Fury | 6 Cyl. | 1600 |
| | 8 Cyl. | 1300 |
| Valiant and Barracuda | 6 Cyl. | 1250 |
| | 8 Cyl. | 1000 |

MyMopar.com

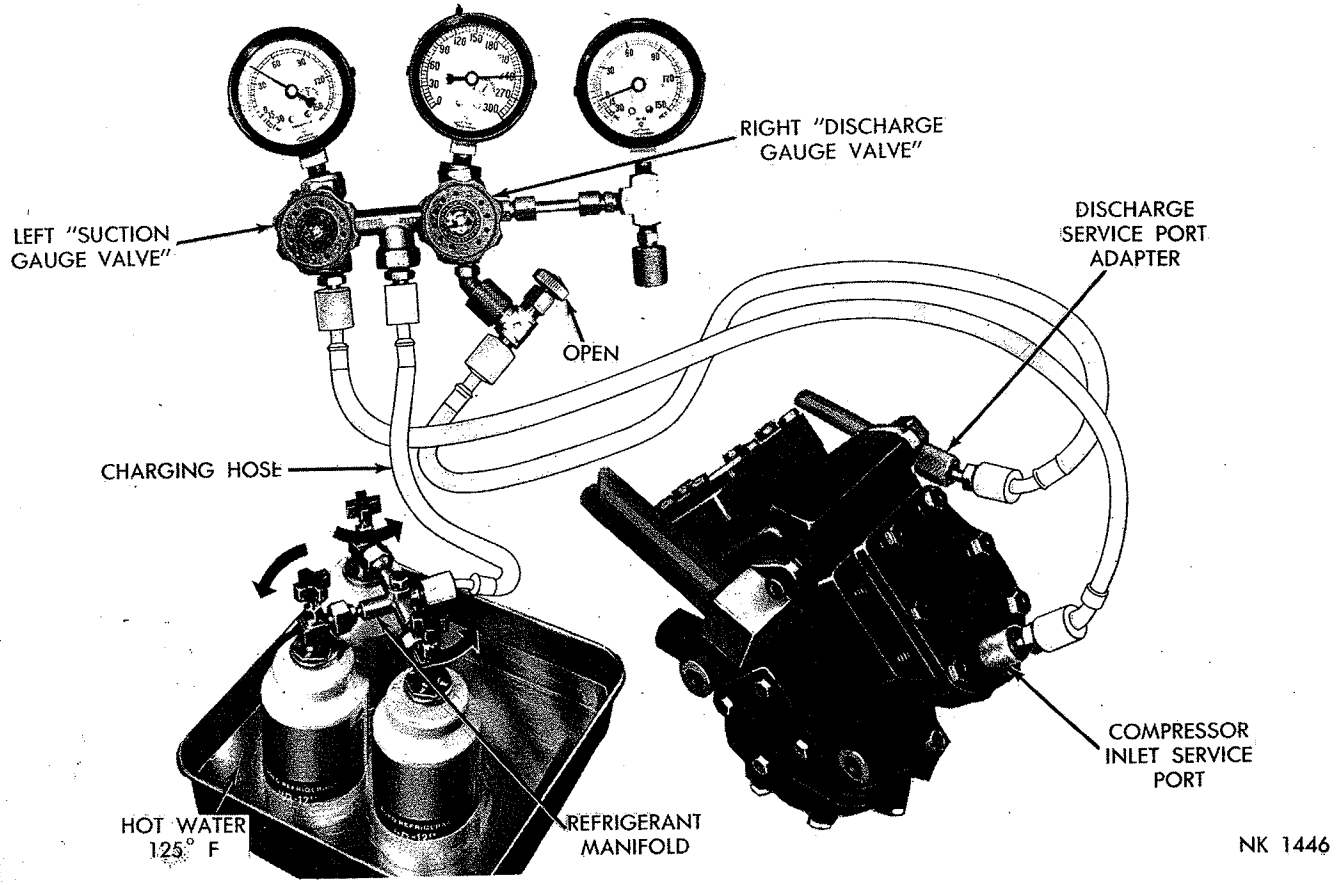


***Fig. 90—Complete System Charging (Valiant and Barracuda Installations)***

(a) Charge the system through the suction side of the system by slowly opening the left-hand gauge set manifold valve. Adjust valve as necessary so charging pressure does not exceed 50 psi. Maintain the temperature of the water in the pan by adding warm water as necessary.

(b) When all three cans of refrigerant are completely empty, close gauge set manifold valves and refrigerant manifold valves.

(c) If more than three cans of refrigerant are necessary to complete charge repeat steps two through six.

2903

MyMopar.com